Governor
Joseph M. Lombardo

Members
Treasurer Zach Conine
Director Terry Reynolds
Director Tom Burns
Member Ken Liu
Member Tracy Holland
Member Jesse Haw
Member Matt Kershaw
Member Blayne Osborn

PUBLIC NOTICE

AGENDA

MEETING OF THE NEVADA STATE INFRASTRUCTURE BANK
October 30, 2023
2:00 P.M.

Locations:
Via videoconference at the following locations:

Nevada State Capitol
Old Assembly Chambers
101 North Carson Street
Carson City, NV 89701

Grant Sawyer Office Building
Governor's Office Conference Room
555 East Washington Avenue, Suite 5100
Las Vegas, NV 89101

Members of the public may also participate in this meeting virtually through Microsoft Teams, accessible here:

Click here to join the meeting
Meeting ID: 272 407 951 897
Passcode: QW3TXK

Or call in (audio only)
+1 775-321-6111,,623922679#
Phone Conference ID: 623 922 679#

Agenda Items:

1. Roll Call

2. Public Comment
   Comments from the public are invited at this time. Pursuant to NRS 241.020(3)(d)(7), the Board intends to limit to 3 minutes the time for an individual to speak and reserves the right to impose other reasonable restrictions on place or manner for such comment. No restriction will be imposed based on viewpoint. Comment will only be received on matters relevant to the Board's jurisdiction. The Board is not permitted to deliberate or take action on any items raised during the public comment period until the matter itself has been specifically included on an agenda as an item upon which action may be taken by the Board.

Comments by the public may be emailed to ejimenez@nevadatreasurer.gov by 9:00 p.m. the day before the scheduled meeting and include the commenter's full name. Content may be redacted due to inappropriate language. All written public comments shall, in their entirety, be included as part of the public record.

3. Election of a Vice Chair for the Board of Directors of the Nevada State Infrastructure Bank. NRS 408.55069(6). (**For discussion and possible action**).

4. Approval of the minutes from the State Infrastructure Bank Board of Directors meeting from October 10, 2022. **(For discussion and possible action).**

5. Staff report on the operations and administration of the Nevada State Infrastructure Bank. **(For discussion only).**

   Presenter: Erik Jimenez, Secretary to the Board of Directors of the Nevada State Infrastructure Bank.

6. Update on financing applications received by the Nevada State Infrastructure Bank, and direction to staff as appropriate **(For discussion and possible action).**

   - Northern Nevada Building and Construction Trades Council Development Corporation – *Carville Park Apartments*
   - City of West Wendover – *West Wendover Fire Station/Emergency Operations Center*
   - Lincoln County – *Lincoln County Power District Local Generation and Resiliency System*

   Presenter: Erik Jimenez, Secretary to the Board of Directors of the Nevada State Infrastructure Bank.

7. Presentation of the staff report required pursuant to Regulation No. R017-22 for the proposed Nevada Facilities Fund project which was previously submitted to the State Infrastructure Bank for consideration. **(For discussion only).**

   Presenter: Erik Jimenez, Secretary to the Board of Directors of the Nevada State Infrastructure Bank.

8. Approval of a loan of $15,000,000 from the Nevada State Infrastructure Bank's Charter School Capital Needs Revolving Account to Opportunity 180 to establish the Nevada Facilities Fund. **(For discussion and possible action)**.

9. Dates for future meetings. **(For discussion only)**.

10. Public Comment.

Comments from the public are invited at this time. Pursuant to NRS 241.020(3)(d)(7), the Board intends to limit to 3 minutes the time for an individual to speak and reserves the right to impose other reasonable restrictions on place or manner for such comment. No restriction will be imposed based on viewpoint. Comment will only be received on matters relevant to the Board's jurisdiction. The Board is not permitted to deliberate or take action on any items raised during the public comment period until the matter itself has been specifically included on an agenda as an item upon which action may be taken by the Board.

Comments by the public may be emailed to ejimenez@nevadatreasurer.gov by 9:00 p.m. the day before the scheduled meeting and include the commenter's full name. Content may be redacted due to inappropriate language. All written public comments shall, in their entirety, be included as part of the public record.

11. **ADJOURNMENT**

Notes:

STACKED AGENDA: Below is an agenda of all items scheduled to be considered. Unless otherwise stated, items may be taken out of the order presented on the agenda by the discretion of the Chair. Items may also be combined for consideration or pulled or removed from the agenda at any time. Persons who have business before the Commission are solely responsible to see that they are present when their business is conducted.

The Nevada State Infrastructure Bank is pleased to make reasonable accommodations for persons with physical disabilities. Please call (775) 684-5613 if assistance is needed.

In the event there are supporting materials available for items on this agenda, such materials will be produced upon request pursuant to NRS 241.020(7) and (8) by submitting a request via email to ejimenez@nevadatreasurer.gov. Supporting materials may also be available at the Bank's website at https://sib.nv.gov/Board.

Erik Jimenez, Secretary to the Board of Directors may be contacted at (775) 684-5613 to obtain copies of supporting materials, which are available to the public at 101 North Carson Street, Suite 4, Carson City, NV 89701.

THIS AGENDA HAS BEEN POSTED IN THE FOLLOWING PUBLIC LOCATIONS:

- **State Capitol Building, 1st & 2nd Floors, 101 North Carson Street, Carson City, NV 89701**
- **Nevada Legislative Building, 401 South Carson Street, Carson City, NV 89701**
- **Nevada State Library, 100 Stewart Street, Carson City, NV 89701**
- **Blasdel Building, 209 East Musser Street, Carson City, NV 89701**
- **Grant Sawyer State Office Building, 555 East Washington Avenue, Las Vegas, NV 89101**
- **Also online at: https://sib.nv.gov and https://notice.nv.gov/.**

STATE INFRASTRUCTURE BANK
October 10, 2022 – 3:00 PM
Summary Minutes

Location:
Via videoconference at the following locations:

Old Assembly Chambers Capitol Building, Second Floor 101 N. Carson Street Carson City, NV 89701	Governor's Office Conference Room 555 E Washington Avenue, Suite 5100 Las Vegas, NV 89101

Treasurer Conine called the meeting to order at 3:00 pm

Board members present:
Treasurer Zach Conine – Las Vegas
Director David Bobzien – Governor's Office of Energy – via Teams
Director Michael Brown – Governor's Office of Economic Development – via Teams
Director Terry Reynolds – Business and Industry – via Teams
Director Kristina Swallow – Nevada Dept. of Transportation – via Teams

Others present:

Erik Jimenez:	Treasurer's Office
Jeff Landerfelt:	Treasurer's Office
Michael Viets:	Attorney General
Harry Ward:	Attorney General
Rebecca Feiden:	Public Charter School Authority
James Humm:	Governor's Office of Economic Development
Ted Chandler:	AFL-CIO Housing Investment Trust
Joseph Weatherly:	McCormack Baron Salazar
Daniel Falcon:	McCornack Baron Salazar
Tyler Shaw:	Ferrari Reeder PA
Sarah Adler:	Belz and Case/Mariposa
Asheesh Bhalla:	Nevada State Infrastructure Bank
Ray Fraser:	Opportunity 180
Jana Wilcox-Lavin:	Opportunity 180
Miles Dickson:	Opportunity 180
Anthony Curry:	Opportunity 180
Shawn McCormack:	Equitable Facilities Funds
Michael McGregor:	Equitable Facilities Fund

DRAFT

Agenda Item 2 – NRS Chapter 240 – Open Meeting Law Compliance

Treasurer Conine confirmed that they are in compliance with the Open Meeting Law.

Agenda Item 3 – Public Comment

Carson City Comments: Vice President Sara Adler with Belz and Case Government Affairs, representing Mariposa Academy Charter School shared her public comment. She stated that Mariposa submitted an application on August 17th for funding from the State Infrastructure Bank to purchase its current building in southeast Reno, a lower-income area of Washoe County. Mariposa Academy meets all eligibility requirements for the Charter School Revolving Fund. It also meets the criteria proposed by Opportunity 180 that will be presented. She noted that Mariposa is a Title 1 school with 100% of students meeting the requirements of the free or reduced lunch program. She stated the school is located in the low-income census tract and zip code, more than 90% of the Academy's students are minorities, and 45% of students are currently or have been English language learners. The school does not use any charter management organization and is a high-performing school, having received the highest test scores out of any other Title 1 school in Washoe County School District. She explained that the Opportunity 180 Facilities Fund is impressive and contains appropriate criteria for assessing academic, organizational, and financial criteria, necessary for the State Infrastructure Board (SIB) to be assured that the funding the SIB allocates to charter schools will be well-invested. She stated that is also terrific that it shows how it intends to leverage the charter fund into a 100 million lending pool. The intent of the governor and the legislature is that these charter school funds be available to serve Title 1 nonprofit schools in all areas of Nevada. Mariposa would like to note that the Opportunity 180 proposal shares phase 1 and phase 2 pipelines that list only schools in Clark County. Mariposa is eager to move forward with financing, in order to secure ownership of its building and be in greater control of its monthly costs in the future. She concluded her comment by noting Mariposa hopes that an application will not be held up to an undue extent while the establishment of a lending pool arrangement moves forward.

No public comment in Las Vegas or via Teams.

Agenda Item 4 – For discussion and possible action: Approval of the minutes from the State Infrastructure Bank Board of Directors meeting from August 12, 2022.

Motion to approve the meeting minutes from Member Reynolds and a second from Member Bobzien. Motion passed unanimously.

Agenda Item 5 – For discussion only: Welcome and introduction from the Executive Director of the Nevada State Infrastructure Bank

Asheesh Bhalla, Executive Director of the Nevada State Infrastructure Bank, took a moment to thank the board for their nomination and thanked the governor for the appointment. Mr. Bhalla also thanked Treasurer Conine, Deputy Jimenez, and the Treasurer's office for their hard work in putting together the financing and framework for this bank. Director Bhalla went over a brief status report beginning with his duties that began on September 19th, 2022. Mr. Bhalla has been making progress on establishing the bank within the administrative processes of NDOT, as authorized by statute and regulations. He is currently setting up a website, implementing administrative processes for IT and HR, and putting together a work program for additional staff. He and his team are

moving forward with the evaluation of applications as quickly as possible. He stated the first application has moved through the statutory review phase for eligibility, and the bank is currently accepting and reviewing applications as they come into the bank. Finally, he noted he is working to develop standard processes and procedures for application, applicant and project review, and standard forms for loan origination and servicing. He stated that bank staff is reviewing sample policies contracts and forms from other sources to develop best practices for the bank moving forward. He thanked the board again for its support and looks forward to making this a successful, transparent, accountable, and responsive institution for the people of Nevada.

Treasure Conine expressed to Mr. Bhalla how grateful the board is and thanked him for taking the job.

This is an informational item only and therefore did not require a vote of the members.

Agenda Item 6 – For discussion and possible action: Election of a Chair and Vice Chair for the Board of Directors of the Nevada State Infrastructure Bank. NRS 408.55069(6).

Member Brown nominated Treasurer Conine as Chairman of the State Infrastructure Bank. Member Reynolds seconded this nomination. Motion passed unanimously.

Treasurer Conine motioned to have Member Swallow continues as the Vice Chairman of the State Infrastructure Board. Member Reynolds seconded this motion. Motion passed unanimously.

Agenda Item 7 – For discussion and possible action: Approval of NRS 408.55087 annual report of the Board of Directors of the Nevada State Infrastructure Bank to the Governor and LCB (submitted September 30, 2022)

Director Bhalla stated that he would like to add that the report was submitted timely and covers the regulatory and staffing updates.

Motion to approve the report from Member Swallow, a second by Member Bobzien. Motion passed unanimously.

Agenda Item 8 - For discussion and possible action: Approval of proposed amendments to the Investment Policy Statement for the Nevada State Infrastructure Bank, and direction to staff as appropriate.

Director Bhalla recommended and discussed with the board in relation to page 21, section 11. He noted the board previously discussed prohibiting leverage buyouts of equity. Mr. Bhalla would like to clarify the language in the amendment as adjusted, that the board can authorize leverage buyouts and how to proceed.

Motion to approve the amendment by Member Swallow, a second by Member Reynolds. Motion passed unanimously.

Agenda Item 9 - For discussion only: Presentation on the Desert Pines Master Planned Community and opportunities for partnership with the Nevada State Infrastructure Bank.

DRAFT

Daniel Falcon, from McCormack Baron Salazar, stated that his company has been around for 50 years, has communities in 29 states, has done $5 billion in developments, and helped house people in 2500 units with approximately 60,000 people. Their mission is to bring all types of people to a community where they can thrive regardless of background and income status. They also incorporate a design, and improvement process and use community outreach to make sure people can provide input for the neighborhoods. The company also looks to hire within the communities to reflect the cities that they are working in. They are committed to sustainability and building these types of developments to be environmentally safe. He noted this is important for long-term stability and helps to keep costs down. Financing includes about $1.8 billion in cash equity, $900 million in private debt, and another $900 million in federal grants, over $1 billion in local government support, and $200 million from various private foundations and corporations. The Desert Pines planned community incorporates the usage of a golf course located near the Las Vegas Strip, making this location ideal for the new mixed-use development. The company is trying to ensure that the development is around 1800 square feet and proposes to make this a mixed-income and mixed-use development. The mixed-income gives homeownership opportunities as well as multi-family rental opportunities. The current vision for the sight was approved by the City of Las Vegas and approved by the city council and mayor. They are looking to target more affordable income housing for this development, reflective of the needs of the community. The company is looking from the infrastructure bank including grading of the sight, providing streets utilities and all connections to make sure the neighborhood operates appropriately and long term, and having facilities available to everyone. They are looking to connect and expand the development to Cedars Trail, a pedestrian walking area. They are also looking at land usage around the development area. He stated that in terms of financing options, the cost will be around $500 million for the site and the infrastructure itself would be in the range of $35 to $40 million. They will also be looking at how to fund and finance the vertical components, using taxes, bond financing, and 4 percent low-income tax credits, potentially new market tax credits for commercial and education components, as well as the AFL-CIO Housing Investment Trust to help leverage the various components.

Ted Chandler, from AFL-CIO, stated they have a great deal of confidence in McCormack Baron Salazar and in particular, the quality of the communities that they construct. The AFL-CIO is pleased to have the opportunity to bring the resources to the development effort. The key point that would like to be communicated is the leverage that would be created thanks to the State Infrastructure Bank. The development is looking at a magnitude of half a billion dollars, and at least several million dollars of private pension capital to bring to Nevada and Clark County through the development of Desert Pines. The State Infrastructure Bank is looking at leveraging pension capital as much as 8 to 10 to 1, and a total development basis of 10 to 12 to 1.

Member Brown asked if the golf course supplies its own water or has water rights.

Mr. Falcon stated that they have their own water rights and are currently evaluating them as part of their planning. The City of Las Vegas currently owns the golf course.

Mr. Chandler continued with an update about 2 properties in Reno Nevada, to do a substantial rehabilitation and to preserve the affordability of 424 units in two properties. He reviewed there is one in Zephyr Point and the other in Carville Park, owned by Northern Nevada Development Corporation. These will serve over 900 residents, with half of the residents at 30% of the area median income and the rest at 60% of the area median income. The estimated total development cost is $110 million with HIT investment of a little over $70 million. The estimated applications to the Infrastructure Bank will call for $11 million where $2 million will be a short-term investment

paid back in 3 years, with the remainder to be paid back in less than 12 years. He noted from a leverage standpoint, the Infrastructure Bank can look at leveraging private pension capital at more than $6 for every $1 of infrastructure grant money, and $10 for every dollar for total development.

Member Reynolds thanked Mr. Chandler and Mr. Falcon for their presentation as these are much-needed projects for the area.

This is an informational item only and therefore did not require a vote of the members.

Agenda Item 10 - For discussion only: Presentation on the proposed Nevada Facilities Fund project requesting a loan from the Nevada State Infrastructure Bank.

Miles Dickson, from Opportunity 180 members presented their proposed project. When the State infrastructure bank announced its plan to make $15 million available to charter school facilities, Opportunity 180 wanted to bring the best proposal to the state. He stated through the Nevada facilities fund, Opportunity 180 would be able to bring more than $90 million in additional capital, on top of the $15 million, if provided by the State Infrastructure Bank, a total of $105 million. In addition to the capital that Opportunity 180 can bring, the company can bring expertise and community partnerships building a pipeline for eligible schools and projects for the communities that need them the most. He noted Opportunity 180 would like to thank the staff of the Treasurer's office for their help and would like to thank their partners at Equitable Facilities Fund and are excited to bring one of the nation's leaders and resources to Nevada.

Jana-Wilcox-Lavin with Opportunity 180 continued with the presentation, commenting on how they started focusing on charter schools and have evolved their mission over time. This partnership provides an opportunity to ensure there is more money going to kids and in classrooms supporting students, allowing to build a long-time workforce to ensure kids over time are contributing to the community long term in the State of Nevada. One goal reached by Opportunity 180 was to not only bring new philanthropy to the state but also, Opportunity 180 was a recipient of a $23 million federal grant, that allowed support for the expansion of high-quality, nonprofit charter schools serving children who need it most. She noted they are building relationships and have had a relationship with every school in Southern Nevada and are expanding to Northern Nevada. They are looking for another nonprofit mission-driven organization, within the Equitable Facilities Fund, so that more kids have access to great schools in their neighborhoods and find an opportunity to expand access to facilities at low-cost capital that would put more money into classrooms. In the current status of this project, they are on a long-term mission to ensure every child graduates high school, and college and is career ready, prepared to live the life they dream of. Opportunity 180 would like to see 100,000 more kids have access to a great public school in their neighborhood, whether that is a new public or expanded charter school, or an approved district school. As of now, 128,000 children need better options locally. She explained Opportunity 180 has set out to make sure that there are available facilities for schools to continue to invest in. They have found changes in the economy, infrastructure, and capital it is getting more difficult for schools to reduce the amount of money spent on facilities, and make sure the funds are being spent on teachers, students, and resources for the classrooms. She noted they are trying to reduce those costs by making sure there are more schools in neighborhoods and that this proposed partnership brings together what they believe is a meaningful opportunity.

Mike McGregor with Equitable Facilities Fund stated that they are grateful to be exploring a potential partnership. He explained that The Equitable Facilities Fund is a nonprofit national social

impact fund with a mission to save public schools as much money as possible on their facilities expenses. They believe that all children should have quality education and they are proud that they have been able to support this belief by investing close to $1 billion in low-cost with long-term loans in charter schools across the county to the schools that need quality education options the most. He reviewed that 95% of the schools that have been invested in outperform surrounding districts, 70% of students attending the schools are considered low-income, and 80% identify as students of color. The Equitable Facilities Fund appreciates the vision of the SIB and the possible $15 million commitment and is very pleased to propose what they believe is a high-leverage way to make it more affordable for schools to grow and thrive within the State of Nevada. With a $15 million investment from the SIB, the Equitable Facilities Fund proposes to leverage those funds 7 times and more over time as the fund continues to revolve, potentially up to 25 times over the course of 20 years, and to provide at least $100 million of low-cost affordable financing charter schools within Nevada. The $100 million will save the schools at least $20 million in savings before the fund starts to revolve. 7,500 students will attend schools that are financed by the initial round of funding and an estimated 10 or more projects will be completed. Mr. McGregor stated that they are proud collectively with a team of experts in the local community and experts in facilities. He stated it would be their pleasure to take on this commitment on behalf of the State of Nevada.

Ms. Wilcox-Lavin continued with the benefits, stating that they will collect as a nonprofit organization to raise the funds that it costs for time and to administer so that every dollar that is part of the process will go directly to financing facilities for schools, and will provide the labor costs raised separately. She outlined how this proposal will benefit the community, schools, and the state. They look forward to a very open and transparent dialog with the SIB team on the approach to economic and financial performance as well as how to continue to serve students over time. In addition, if savings are around $100,000 a year, that's another administrator or teacher, or more resources for the schools. Opportunity 180 would also like to seek to ensure that the portfolio itself would be serving students with the greatest needs and that those identified in the State public school authority needs assessment are the most at risk for dropping out. The pipeline that is shared in the proposal is estimated, and schools that are known and have worked with that have opportunities, but there is more room to identify more schools across the state and have added more schools as they build relationships.

This is an informational item only and therefore did not require a vote of the members.

Agenda Item 11 - For discussion and possible action: Conditional approval of project eligibility and proposed term sheet with Opportunity 180 for up to 15,000,000 from the Charter School Capital Needs Revolving Account to establish the Nevada Facilities Fund and direction to staff as appropriate.

Director Bhalla reviewed the process that the Bank is implementing for the proposal noting NRS 408.55074, which provides the requirement for loans. The first sub-section states that the qualified borrower that wishes to obtain a loan or other financial assistance from the bank to develop, construct, repair, improve, operate, maintain, decommission, or own an eligible project, must apply to the bank in the manner prescribed by the bank. Mr. Bhalla continued with section 2 of NRS 408.55074 which states that the Executive Director shall (a) review each application and determine whether the application is for an eligible project and (b) at the request of the Board of Directors, submit information to the Board of Directors concerning any eligible projects. Section 3 states that the board of directors shall, from time to time, designate qualified

projects from the amount the eligible projects. The Board of Directors may give preference to an eligible project that has demonstrated local financial support. After project eligibility has been determined, the application will go through the regulatory review phase, then develop a final formal contract that is approved by the Attorney General's Office, and then will come back to the board for final approval of the full terms and conditions.

Chief Policy Deputy Erik Jimenez, with the Treasurer's office, stated that there have been conversations with Opportunity 180 over the last 9 months. Since this would be the first loan that the SIB would potentially be moving forward with, that due diligence was taken to bring back a loan agreement for the board's consideration in an upcoming meeting. He referenced Appendix A, on page 49, of the packet noting a proposed term sheet with the results of the applicant and bank staff in that process. The State's financial advisor, the Debt Management team, leadership of the State Treasurer's Office, and Director Bhalla were involved in the conversations. The applicant is asking for $15 million from the Charter School Capital Needs Revolving Fund. He reviewed the loans that would be leveraged to support the Nevada Facilities Fund, of which the applicant would bring $85 million in outside capital, some in the form of private philanthropy, and some in the form of low-cost debt financing available to nonprofits to secure for the borrower. The maturity that is being proposed is a 20-year maturity and could discuss the maturity and the interest rate. This would be something that would be lower than traditional infrastructure projects. It's important to note that this would be keeping millions of dollars in public school classrooms and every dollar the bank may try to get for additional returns goes against the whole reason for the administration setting up the infrastructure bank and supporting social infrastructure as one of the eligible uses is to make sure whatever investments the bank makes has the highest return for the people of the state, particularly for communities of color and students who need help. A longer term has been proposed in the term sheet as well as a fixed rate of 1.5% per year. Additionally, it is recommended that there are two $7.5 million disbursements, the first being upon the loan closing and the second upon the first disbursement for the closing of the loan issued by the Nevada Facilities Fund. As outlined in the regulation, any borrower that is not using funds from the Affordable Housing Revolving Fund is required to make annual payments starting at the end of the first year to the bank. The payment has been structured with the fact that the money will go to school and be leveraged as effectively as possible to support students and keep the money in the classrooms while meeting regulatory requirements that are outlined in the regulation. The initial annual payment is set at 1 basis point of the outstanding loan balance. A balloon payment equal to the principal and accrued interest would be due at the maturity date. He noted on the last page of the packet, there is a model of what could happen with the initial State Infrastructure Bank loan of how those funds are leveraged with private philanthropy and tax-exempt bonding and how that fund could grow with additional philanthropy and tax-exempt bonding. The facilities fund would be administered by Opportunity 180 and the Equitable Facilities Fund. The Treasurer's Office recognizes that we do not have expertise in the charter school space, and are thankful to Director Feiden and her team at the State's Public Charter School Authority for working with the office on how this project can be structured, to ensure that the guidelines and approval are being met and recognizes that the Treasurer's Office does not have the financial expertise to understand what would be a risky loan to a charter school or an opportunity for a school that is looking to grow. He stated it is an administrative piece that is crucial to make sure that the bank can focus on housing and health care with money coming into the state. He noted there is a reporting requirement in the term sheet that the borrower would submit quarterly reports to the bank, which could be adjusted as needed or as projects are created.

Member Swallow was concerned about the terms of repayment and would like to see Director Bhalla investigate further before approving the loan.

Member Brown questioned if there is a national association that measured good performance on the financial end that would help board members understand if this is a good investment.

Ms. Wilcox-Lavin answered that there are two standards, one being the National Alliance for Public Charter Schools, and work to establish a set of criteria. The other is National Alliance Charter School Authorizers, which establishes criteria for good authorizing to establish standards for schools. As a reminder, when schools are opened in the community, the school has gone through multiple layers of diligence before they would get to the infrastructure bank for facilities financing. The schools have gone through the application and approval process and if they have received startup funding, they would have gone through the Opportunity 180's Charter School Program grant federal funding review process, the second level of evaluation, and the grant is publicly available.

Mr. McGregor added that the Equitable Facilities Fund has the most vigorous diligence process of any charter school in the country, which adheres to said national metrics. To date, 53 loans have zero defaults and intend to keep.

Member Bozien commented about the memo in the packet, that through the organization's philanthropy, the resources would be obtained for administering the funds and handling the administrative overhead. Question number 12 relates to the board's duties to ensure that the bank is consistent with labor and wage standards in NRS 338. Question 12 on the August memo being Opportunity 180 and EFF provide a commitment to the labor standards required for all schools that receive funds through the Nevada Facilities Fund. The response is that Opportunity 180 will require all school borrowers to adhere to applicable labor and wage standards. He asked if the Director of Staff has thought through how those obligations and requirements flow through the bank to the applicant to the subsequent borrowers and how as a board they monitor the compliance to ensure the board is doing their job.

Director Bhalla stated that the board has been thinking about this but at this time does not have a firm answer on how the board would be assuring compliance. The bank would be willing to take any recommendations or guidance and will be part of the final contract.

Deputy Jimenez stated that labor and wage standards are a priority for staff as they work through the regulatory process. All projects are required to pay state prevailing wage rates and some apprenticeship thresholds that need to be met as well for any type of project that would be conducted through Infrastructure bank financing. Staff will be making sure that they are followed through for each project. If different types of reporting thresholds, the board would like to make sure that they work with the labor commissioner.

Member Reynolds commented that there would be a contract agreement that lays out the prevailing rates that would be paid on the project and the apprenticeship agreement for the project and/or labor if applicable. He noted it would be done upfront before the project begins and continue to monitor as the project is completed which is usually done with public works and projects to ensure they meet the requirements under the law.

Member Bobzien commented he would like to see this mapped out before final approval. He

questioned if the application itself needs or supports the goals of the Nevada climate strategy, but he doesn't see how the project would meet the strategy. He expresses they should move forward, whether it is energy efficient construction or emphasis on building techniques but doesn't see anything in the materials to substantiate a response and looks forward as the project progresses.

Member Swallow would like to move to approve the project for statutory eligibility and Director Bhalla to review the term sheet and anything else applicable to the conversation of the meeting.

Motion to approve the agenda item by Member Swallow, a second by Member Bobzien. Chair Conine abstained from voting on the motion. Motion passed with four members in favor and Chair Conine abstaining.

Agenda Item 12 – Public Comment
No public comment in Carson City or Las Vegas. No written public comment.

Meeting adjourned at 4:12 pm.

DRAFT

Senate Bill No. 10–Committee on
Growth and Infrastructure

CHAPTER.....

AN ACT relating to the Nevada State Infrastructure Bank; requiring the Bank to keep confidential certain information; removing the Bank from the Department of Transportation and placing the Bank in the Office of the State Treasurer; expanding the types of projects for which the Bank may provide loans and other financial assistance; revising provisions relating to the Board of Directors of the Bank; and providing other matters properly relating thereto.

Legislative Counsel's Digest:

Existing law establishes the Nevada State Infrastructure Bank within the Department of Transportation, the purpose of which is to provide loans and other financial assistance to qualified borrowers for the development, construction, repair, improvement, operation, maintenance, decommissioning and ownership of certain transportation facilities, utility infrastructure, water and wastewater infrastructure, renewable energy infrastructure, recycling and sustainability infrastructure, digital infrastructure, social infrastructure and other infrastructure related to economic development. (NRS 408.111, 408.55048-408.55088) Under existing law, the Bank is administered by and operates under the direction of a Board of Directors. (NRS 408.55069)

Sections 1.3, 9.3 and 10 of this bill authorize the Bank to provide loans and other financial assistance for K-12 school facilities in counties with a population of less than 100,000. **Section 11.5** of this bill provides that, for the purpose of providing a loan or other financial assistance: (1) the anticipated useful life of a K-12 school facility must not be deemed to be longer than 50 years; and (2) the Bank may offer a school district a rate of interest on a loan of 0 percent under certain circumstances. **Section 9.7** of this bill adds workforce housing to the types of social infrastructure projects for which the Bank is authorized to provide loans and other financial assistance. **Sections 9.3, 9.5, 11.3 and 11.7** of this bill make conforming changes to ensure the administration of loans or other financial assistance for K-12 school facilities are consistent with provisions of existing law governing other loans or financial assistance provided by the Bank.

Sections 1.7 and 15 of this bill require the Bank to keep confidential certain information which is submitted or disclosed to the Bank, except under certain circumstances. **Section 10** authorizes the Board of Directors to hold a closed meeting or to close a portion of a meeting to receive, examine or consider information which the Bank is required to keep confidential. **Section 16** of this bill makes a conforming change to reflect that the Board of Directors is authorized to hold such closed meetings. **Sections 9, 12 and 13** of this bill make conforming changes to indicate the proper placement of **sections 1.3 and 1.7** in the Nevada Revised Statutes.

Section 10: (1) provides that the State Treasurer or his or her designee serves as the Chair of the Board of Directors and removes the requirement that the Board of Directors annually elect a Chair; (2) revises the membership of the Board of Directors; and (3) prohibits a member of the Legislature from being appointed to the Board of Directors.

Sections 2 and 10 of this bill remove the Bank from the Department of Transportation and establish the Bank within the Office of the State Treasurer. **Sections 3-8** of this bill make conforming changes to reflect that the Bank is no longer within the Department. **Sections 11 and 14** of this bill make conforming changes relating to the staffing of the Bank.

EXPLANATION – Matter in ***bolded italics*** is new; matter between brackets ~~[omitted material]~~ is material to be omitted.

THE PEOPLE OF THE STATE OF NEVADA, REPRESENTED IN SENATE AND ASSEMBLY, DO ENACT AS FOLLOWS:

Section 1. Chapter 408 of NRS is hereby amended by adding thereto the provisions set forth as sections 1.3 and 1.7 of this act.

Sec. 1.3. ***"K-12 school facility" means buildings and related assets, in a county whose population is less than 100,000, that are used primarily for educational instruction of pupils in kindergarten or in any grades 1 to 12, inclusive, and activities that directly support instruction. The term does not include facilities that are not used for educational instruction, including, without limitation, stand-alone athletic facilities, auditoriums and administrative buildings.***

Sec. 1.7. ***1. Except as otherwise provided in subsections 2 and 3, the Bank shall keep confidential any information that is required to be submitted or disclosed to the Bank:***

(a) In an application for a loan or other financial assistance and which has not already been made public or is not otherwise publicly available, other than:

(1) The amount of the loan or other financial assistance being sought;

(2) The name of each person in any submission or disclosure;

(3) The basis for the loan or other financial assistance being sought;

(4) The terms or proposed terms of the loan or other financial assistance being sought;

(5) Any information asserted in the submission or disclosure that is, or which the Bank asserts to be, necessary or relevant to the decision of the Bank to grant or deny the loan or other financial assistance; and

(6) The amount of the loan or other financial assistance granted; or

(b) Which the Bank is required to keep confidential pursuant to federal law.

2. The Bank shall disclose the information set forth in subsection 1:

(a) Upon the lawful order of a court of competent jurisdiction;

(b) To any person upon the request of the person who is the subject of the information;

(c) Upon the completion of the loan or other financial assistance, excluding any proprietary information; or

(d) In the course of the necessary administration of this chapter.

3. The Bank may disclose the information set forth in subsection 1 to an authorized agent of an agency of the United States Government, a state, a political subdivision of a state, a foreign government or a political subdivision of a foreign government which finances infrastructure projects.

4. A person seeking an order of a court of competent jurisdiction for the disclosure of information described in subsection 1 must submit a motion in writing to the court requesting the information. At least 10 days before submitting the motion, the person must provide notice to the Bank, the Attorney General and all persons who may be affected by the disclosure of the information. The notice must:

(a) Include, without limitation, a copy of the motion and all documents in support of the motion that are to be filed with the court; and

(b) Be delivered in person or by certified mail to the last known address of each person to whom notice must be provided.

5. As used in this section:

(a) "Confidential business information" means any information relating to the amount or source of any income, profits, losses or expenditures of a person, including, without limitation, data relating to cost or price submitted to the Bank in support of a proposal. The term does not include the amount of a bid or proposal.

(b) "Proprietary information" means any trade secret or confidential business information that is contained in a proposal submitted to the Bank.

Sec. 2. NRS 408.111 is hereby amended to read as follows:

408.111 1. The Department consists of a Director, three Deputy Directors, a Chief Engineer and the following:

(a) Administrative Division.

(b) Operations Division.

(c) Engineering Division.

(d) Planning Division.

~~[(e) Nevada State Infrastructure Bank.]~~

2. The head of a Division is an assistant director. Assistant directors are in the unclassified service of the State.

Sec. 3. NRS 408.116 is hereby amended to read as follows:

408.116 ~~[Except as otherwise provided in NRS 408.55048 to 408.55088, inclusive:]~~

1. All legal notices, writs, service and process issued or ordered by a court of competent jurisdiction wherein the Department is named as a defendant must be personally served upon both the Director and the Chair of the Board or, in the absence of the Director and the Chair of the Board, the process must be served personally upon both the Secretary of State and one of the Deputy Directors.

2. All legal actions brought and defended by the Department must be in the name of the State of Nevada on relation of its Department.

3. This section is not a consent on the part of the Department to be sued.

Sec. 4. NRS 408.131 is hereby amended to read as follows:

408.131 ~~[Except as otherwise provided in NRS 408.55048 to 408.55088, inclusive, the]~~ ***The*** Board shall:

1. Consider, at its meetings, all questions relating to the general policy of the Department and transact such business as properly comes before it.

2. Receive and consider, at such time as the Board selects, an annual report by the Director.

3. Except as otherwise provided in NRS 408.203, act for the Department in all matters relating to recommendations, reports and such other matters as the Board finds advisable to submit to the Legislature.

4. Maintain a record of all proceedings of the Board.

5. Execute or approve all instruments and documents in the name of the State or the Department necessary to carry out the provisions of this chapter.

6. Except as otherwise provided in NRS 408.389, delegate to the Director such authority as it deems necessary under the provisions of this chapter.

7. Act by resolution, vote or order entered in its records.

Sec. 5. NRS 408.172 is hereby amended to read as follows:

408.172 1. Subject to the approval of the Board, the Attorney General shall, immediately upon request by the Board, appoint an attorney at law as the Chief Counsel of the Department, and such

assistant attorneys as are necessary. Attorneys so appointed are deputy attorneys general.

2. ~~[Except as otherwise provided in NRS 408.55048 to 408.55088, inclusive, the]~~ ***The*** Chief Counsel shall act as the attorney and legal adviser of the Department in all actions, proceedings, hearings and all matters relating to the Department and to the powers and duties of its officers.

3. Under the direction of or in the absence of the Chief Counsel, the assistant attorneys may perform any duty required or permitted by law to be performed by the Chief Counsel.

4. The Chief Counsel and assistant attorneys are in the unclassified service of the State.

5. ~~[Except as otherwise provided in NRS 408.55048 to 408.55088, inclusive, all]~~ ***All*** contracts, instruments and documents executed by the Department must be first approved and endorsed as to legality and form by the Chief Counsel.

Sec. 6. NRS 408.175 is hereby amended to read as follows:

408.175 1. The Director shall:

(a) Appoint one Deputy Director who in the absence, inability or failure of the Director has full authority to perform any duty required or permitted by law to be performed by the Director.

(b) Appoint one Deputy Director for southern Nevada whose principal office must be located in an urban area in southern Nevada.

(c) Appoint one Deputy Director with full authority to perform any duty required or allowed by law to be performed by the Director to implement, manage, oversee and enforce any environmental program of the Department.

(d) ~~[Except as otherwise provided in NRS 408.55071, employ]~~ ***Employ*** such engineers, engineering and technical assistants, clerks and other personnel as in the Director's judgment may be necessary to the proper conduct of the Department and to carry out the provisions of this chapter.

2. Except as otherwise provided in NRS 284.143, the Deputy Directors shall devote their entire time and attention to the business of the office and shall not pursue any other business or occupation or hold any other office of profit.

3. The Director may delegate such authority as may be necessary for the Deputy Director appointed pursuant to paragraph (b) of subsection 1 to carry out his or her duties.

Sec. 7. NRS 408.215 is hereby amended to read as follows:

408.215 1. The Director has charge of all the records of the Department, keeping records of all proceedings pertaining to the

Department and keeping on file information, plans, specifications, estimates, statistics and records prepared by the Department, ~~[except as otherwise provided in NRS 408.55048 to 408.55088, inclusive, and]~~ except those financial statements described in NRS 408.333 and the financial or proprietary information described in paragraph (c) of subsection 6 of NRS 408.3886, which must not become matters of public record.

2. The Director may photograph, film, place an image of on microfilm, save as an image in an electronic recordkeeping system or dispose of the records of the Department referred to in subsection 1 as provided in NRS 239.051, 239.080 and 239.085.

3. The Director shall maintain an index or record of deeds or other references of title or interests in and to all lands or interests in land owned or acquired by the Department.

4. The Director shall adopt such regulations as may be necessary to carry out and enforce the provisions of this chapter.

Sec. 8. NRS 408.389 is hereby amended to read as follows:

408.389 1. Except as otherwise provided in subsection 2 **,** ~~[and NRS 408.55048 to 408.55088, inclusive,]~~ the Department shall not purchase any equipment which exceeds $50,000, unless the purchase is first approved by the Board.

2. Before the Board may approve the purchase of any mobile equipment which exceeds $50,000, the Department shall:

(a) Prepare and present to the Board an analysis of the costs and benefits, including, without limitation, all related personnel costs, that are associated with:

(1) Purchasing, operating and maintaining the same item of equipment;

(2) Leasing, operating and maintaining the same item of mobile equipment; or

(3) Contracting for the performance of the work which would have been performed using the mobile equipment; and

(b) Justify the need for the purchase based on that analysis.

3. The Board shall not:

(a) Delegate to the Director its authority to approve purchases of equipment pursuant to subsection 1; or

(b) Approve any purchase of mobile equipment which exceeds $50,000 and for which the Department is unable to provide justification pursuant to subsection 2.

Sec. 9. NRS 408.55048 is hereby amended to read as follows:

408.55048 As used in NRS 408.55048 to 408.55088, inclusive, ***and sections 1.3 and 1.7 of this act,*** unless the context otherwise requires, the words and terms defined in NRS 408.55049 to

408.550685, inclusive, ***and section 1.3 of this act,*** have the meanings ascribed to them in those sections.

Sec. 9.3. NRS 408.55053 is hereby amended to read as follows:

408.55053 "Eligible project" means the development, construction, repair, improvement, operation, maintenance, decommissioning or ownership of a transportation facility, utility infrastructure, water and wastewater infrastructure, renewable energy infrastructure, recycling and sustainability infrastructure, digital infrastructure, ***K-12 school facility,*** social infrastructure and other infrastructure related to economic development.

Sec. 9.5. NRS 408.550615 is hereby amended to read as follows:

408.550615 "Other infrastructure related to economic development" means infrastructure that:

1. Supports a public purpose while promoting economic development for a local, regional or state purpose; and

2. Is not a transportation facility, utility infrastructure, water and wastewater infrastructure, renewable energy infrastructure, recycling and sustainability infrastructure, digital infrastructure ***, K-12 school facility*** or social infrastructure.

Sec. 9.7. NRS 408.550647 is hereby amended to read as follows:

408.550647 "Social infrastructure" means any infrastructure which:

1. Is used or useful for the construction, development and maintenance of facilities and systems that support social services, including, without limitation, those services related to health care, education, affordable housing, ***workforce housing,*** homelessness and food security; and

2. Augments existing services, including, without limitation, the services provided pursuant to chapters 319 and 387 of NRS.

Sec. 10. NRS 408.55069 is hereby amended to read as follows:

408.55069 1. The Nevada State Infrastructure Bank is hereby created within the ~~[Department.]~~ ***Office of the State Treasurer.***

2. The purpose of the Bank is to provide loans and other financial assistance to qualified borrowers for the development, construction, repair, improvement, operation, maintenance, decommissioning and ownership of transportation facilities, utility infrastructure, water and wastewater infrastructure, renewable energy infrastructure, recycling and sustainability infrastructure, digital infrastructure, ***K-12 school facilities,*** social infrastructure and

other infrastructure related to economic development as necessary for public purposes.

3. The Bank is administered by and operates under the direction of a Board of Directors consisting of:

(a) ~~[The Director of the Department of Transportation or his or her designee;~~

~~(b)]~~ The State Treasurer or his or her designee ~~[;]~~ ***, who shall serve as Chair of the Board of Directors;***

(b) The Director of the Department of Business and Industry or his or her designee;

(c) ***The Executive Director of the Office of Economic Development or his or her designee;***

(d) The ~~[Director of]~~ ***following members appointed by*** the ~~[Department of Business and Industry or his or her designee;~~

~~(d) The Executive Director of]~~ ***Majority Leader of the Senate:***

(1) One member who has knowledge, skill and experience relating to the housing or the hospitality industry; and

(2) One member who represents the interests of organized labor within the building trades;

(e) The following members appointed by the ~~[Office of Economic Development or his or her designee;~~

~~(e) The Director of the Office of Energy or his or her designee; and]~~ ***Speaker of the Assembly:***

(1) One member who has knowledge, skill and experience in banking; and

(2) One member who represents the interests of Native Americans, selected after consulting with Indian tribes and tribal organizations; and

(f) Two ~~[representatives of]~~ ***members who represent*** the general public, at least one of whom must reside in a county whose population is ~~[700,000 or more,]~~ ***less than 100,000,*** appointed by the Governor.

4. Each member of the Board of Directors who is appointed pursuant to subsection 3 serves at the pleasure of the appointing authority. ***A person must not be appointed to the Board of Directors if he or she is currently serving as a Legislator.***

5. A vacancy on the Board of Directors in an appointed position must be filled by the appointing authority in the same manner as the original appointment.

6. The Board of Directors shall elect annually from among its members ~~[a Chair and]~~ a Vice Chair.

7. ~~[Four]~~ ***Five*** members of the Board of Directors constitute a quorum for the transaction of business, and the affirmative vote of at

least ~~[four]~~ ***five*** members of the Board of Directors is required to take action.

8. The members of the Board of Directors are public officers and are subject to all applicable provisions of law, including, without limitation, the provisions of chapter 281A of NRS.

9. A meeting of the Board of Directors must be conducted in accordance with the provisions of chapter 241 of NRS ~~[.]~~ ***, except that the Board of Directors may hold a closed meeting or close a portion of a meeting to receive, examine or consider information which the Bank is required to keep confidential pursuant to section 1.7 of this act.***

10. Each member of the Board of Directors who is not otherwise an officer or employee of this State is entitled:

(a) To receive $100 for each full day of attending a meeting of the Board of Directors; and

(b) While engaged in the business of the Board of Directors, to receive the per diem allowance and travel expenses provided for state officers and employees generally. The per diem allowance and travel expenses provided to a member of the Board of Directors who is an officer or employee of this State or a political subdivision of this State must be paid by the state agency or political subdivision that employs him or her.

11. A member of the Board of Directors who is an officer or employee of this State or a political subdivision of this State must be relieved from his or her duties without loss of regular compensation so that he or she may prepare for and attend meetings of the Board of Directors and perform any work necessary to carry out the duties of the Board of Directors in the most timely manner practicable. A state agency or political subdivision of this State shall not require an officer or employee who is a member of the Board of Directors to:

(a) Make up the time the member is absent from work to carry out his or her duties as a member of the Board of Directors; or

(b) Take annual leave or compensatory time for the absence.

Sec. 11. NRS 408.55071 is hereby amended to read as follows:

408.55071 1. The Board of Directors may:

(a) Make, and from time to time amend and repeal, bylaws not inconsistent with NRS 408.55048 to 408.55088, inclusive, ***and sections 1.3 and 1.7 of this act,*** to carry into effect the powers and purposes of NRS 408.55048 to 408.55088, inclusive ~~[.]~~ ***, and sections 1.3 and 1.7 of this act.***

(b) Sue and be sued in the name of the Bank.

(c) Have a seal and alter the same at the pleasure of the Board of Directors, but the failure to affix the seal does not affect the validity of an instrument executed on behalf of the Bank.

(d) Make loans to qualified borrowers to finance all or part of the eligible costs of a qualified project.

(e) Provide qualified borrowers with other financial assistance necessary to defray all or part of the eligible costs of a qualified project.

(f) Acquire, hold and sell loan obligations at such prices and in such a manner as the Board of Directors deems advisable.

(g) Enter into contracts, arrangements and agreements with qualified borrowers and other persons and execute and deliver all financing agreements and other instruments necessary or convenient to carry out the powers and duties of the Board of Directors.

(h) Enter into agreements with a department, agency or instrumentality of the United States or governmental unit of this State or another state for the purpose of providing for the financing of qualified projects.

(i) Establish:

(1) Policies and procedures to govern the selection of qualified projects and the issuance and administration of loans and other financial assistance provided by the Bank; and

(2) Fiscal controls and accounting procedures to ensure proper accounting and reporting by the Bank and qualified borrowers.

(j) Acquire, by purchase, lease, donation or other lawful means, real or personal property and any interest therein.

(k) Sell, convey, pledge, lease, exchange, transfer and dispose of all or any part of the property and assets of the Bank.

(l) Procure insurance, guarantees, letters of credit and other forms of collateral or security or credit support for the payment of bonds or other securities issued by the Bank and the payment of premiums or fees on such insurance, guarantees, letters of credit and other forms of collateral or security or credit support.

(m) Collect or authorize the trustee under any trust indenture that secures any bonds or other securities issued by the Bank to collect amounts due from a qualified borrower under any loan obligation owned by the Bank, including, without limitation, taking any lawful action required to obtain payment of any sums in default.

(n) Unless restricted by the terms of an agreement with the holders of bonds or other securities issued by the Bank, consent to any modification of the terms of any loan obligations owned by the

Bank, including, without limitation, the rate of interest, period of repayment and payment of any installment of principal or interest.

(o) Borrow money through the issuance of bonds and other securities as provided in NRS 408.55048 to 408.55088, inclusive ~~[.]~~ ***, and sections 1.3 and 1.7 of this act.***

(p) Incur expenses to obtain accounting, management, legal or financial consulting and other professional services necessary to the operations of the Bank.

(q) To the extent that money is available from public or private sources of administrative costs, pay any costs incurred for the administration of the operations of the Bank.

(r) Establish advisory committees, which may include persons from the private sector with civil engineering, banking and financial expertise.

(s) Procure insurance against losses in connection with the Bank's property, assets or activities, including, without limitation, insurance against liability for any act of the Bank or its employees or agents, or establish cash reserves to enable the Bank to act as a self-insurer against such losses.

(t) Impose and collect fees and charges in connection with the activities of the Bank.

(u) Apply for, receive and accept from any source aid grants or contributions of money, property, labor or other things of value to be used to carry out the statutory purposes and powers of the Bank.

(v) Enter into contracts, arrangements or agreements for the servicing and processing of financial agreements.

(w) Accept and hold, with payment of interest, money deposited with the Bank.

(x) Request technical advice, support and assistance ~~[from the divisions of the Department.]~~ ***pursuant to NRS 408.55088.***

(y) Do all other things necessary or convenient to exercise any power granted or reasonably implied by NRS 408.55048 to 408.55088, inclusive ~~[.]~~ ***, and sections 1.3 and 1.7 of this act.***

2. Except as otherwise provided in NRS 408.55048 to 408.55088, inclusive, ***and sections 1.3 and 1.7 of this act,*** the Bank may exercise any fiscal power granted to the Bank in NRS 408.55048 to 408.55088, inclusive, ***and sections 1.3 and 1.7 of this act*** without the review or approval of any other department, division or agency of the State or any political subdivision thereof, except for the Board of Directors.

3. In exercising the powers and performing the functions set forth in NRS 408.55048 to 408.55088, inclusive, ***and sections 1.3 and 1.7 of this act,*** the members of the Board of Directors:

(a) Must act in a commercially reasonable manner and in the interests of this State. For the purposes of this paragraph, the interests of this State include, without limitation, the public welfare and economy of this State and the long-term and short-term interests of this State.

(b) May, unless a member of the Board of Directors has knowledge concerning a matter in question that would cause reliance thereon to be unwarranted, rely on information, opinions, reports, books of account or statements, including, without limitation, financial statements and other financial data, that are prepared or presented by:

(1) One or more members of the Board of Directors or officers or employees of the Bank reasonably believed to be reliable and competent in the matters prepared or presented;

(2) Counsel, public accountants, financial advisers, valuation advisers, investment bankers, engineers, architects or other persons as to matters reasonably believed to be within the professional or expert competence of the preparer or presenter; or

(3) A committee on which the director or officer relying thereon does not serve, as to matters within the designated authority of the committee and matters on which the committee is reasonably believed to merit confidence.

4. This section does not authorize the Bank to be or conduct business as a:

(a) Bank or trust company within the jurisdiction of chapters 657 to 671, inclusive, of NRS or under the control of an agency of the United States or this State; or

(b) Bank, banker or dealer in securities within the meaning of, or subject to the provisions of, any securities, securities exchange or securities dealers' laws of the United States or of this State.

5. The Bank must, before accepting a deposit from any person or governmental unit, provide a notice to the depositor stating that the deposit is not insured by the Federal Deposit Insurance Corporation.

6. The provisions of titles 55 and 57 of NRS do not apply to the Bank.

Sec. 11.3. NRS 408.55073 is hereby amended to read as follows:

408.55073 1. The Nevada State Infrastructure Bank Fund is hereby created as an enterprise fund. The Fund is a continuing fund without reversion.

2. The Fund is administered by the Board of Directors.

3. The Board of Directors may establish accounts and subaccounts within the Fund and shall ensure that accounting for the Fund is performed in accordance with all applicable laws and regulations governing the use of funds.

4. Except as otherwise provided in subsection 7, all money received by the Bank pursuant to NRS 408.55048 to 408.55088, inclusive, ***and sections 1.3 and 1.7 of this act*** must be deposited in the Fund.

5. The Bank may accept for deposit into the Fund:

(a) Any money appropriated by the Legislature or authorized for allocation by the Interim Finance Committee;

(b) Federal funds made available to the State;

(c) Gifts, grants, donations and contributions from a governmental unit, private entity or any other source;

(d) Any money paid or credited to the Bank, by contract or otherwise, including, without limitation:

(1) Payment of principal and interest on a loan or other financial assistance provided to a qualified borrower by the Bank; and

(2) Interest earned from the investment or reinvestment of the Bank's money pursuant to NRS 408.55076;

(e) Proceeds from the issuance of bonds or other securities pursuant to NRS 408.55071; and

(f) Any other lawful source of money that is made available to the Bank and is not already dedicated for another purpose.

6. The Bank shall comply with all applicable federal laws governing the use of federal funds, including, without limitation, statutes and regulations governing:

(a) Any conditions or limitations on expenditures;

(b) Reporting; and

(c) The commingling of federal funds.

7. Earnings on balances in any federal accounts must be credited and invested in accordance with federal law. Earnings on any state and local accounts must be deposited in the Fund to the credit of the account that generates the earnings.

8. Money in the Fund may be used only:

(a) For the capitalization of the Bank; and

(b) To carry out the statutory purposes and powers of the Bank.

9. A local government may use money from any source that is made available to the local government for the purposes of developing, constructing, repairing, improving, operating, maintaining, decommissioning or owning a transportation facility, utility infrastructure, water and wastewater infrastructure, renewable

energy infrastructure, recycling and sustainability infrastructure, digital infrastructure, ***K-12 school facility,*** social infrastructure or other infrastructure related to economic development or for any other purpose set forth in NRS 408.55048 to 408.55088, inclusive, ***and sections 1.3 and 1.7 of this act*** to make a gift, grant, donation or contribution to the Bank or to satisfy any obligation owed by the local government to the Bank, including, without limitation, payments of principal and interest.

Sec. 11.5. NRS 408.55074 is hereby amended to read as follows:

408.55074 1. A qualified borrower that wishes to obtain a loan or other financial assistance from the Bank to develop, construct, repair, improve, operate, maintain, decommission or own an eligible project must apply to the Bank in the manner prescribed by the Bank.

2. The Executive Director shall:

(a) Review each application and determine whether the application is for an eligible project; and

(b) At the request of the Board of Directors, submit information to the Board of Directors concerning any eligible project.

3. The Board of Directors shall, from time to time, designate qualified projects from among the eligible projects. The Board of Directors may give preference to an eligible project that has demonstrated local financial support.

4. The Bank may provide a loan and other financial assistance to a qualified borrower to pay for all or part of the eligible costs of a qualified project. The term of the loan or other financial assistance may not exceed the anticipated useful life of the qualified project. A loan or other financial assistance may be provided in anticipation of reimbursement for or direct payment of all or part of the eligible costs of a qualified project. ***For purposes of this subsection, the anticipated useful life of a K-12 school facility must not be deemed to be longer than 50 years.***

5. The Bank shall determine the form and content of a loan application, financing agreement or loan obligation, including, without limitation:

(a) The period for repayment and the rate or rates of interest on a loan; and

(b) Any nonfinancial provisions included in a financing statement or loan obligation, including, without limitation, terms and conditions relating to the regulation and supervision of a qualified project.

➥ Such form and content must substantially conform with the documents typically used for such transactions.

6. The terms and conditions set forth in a financing agreement or loan obligation for a loan or other financial assistance provided by the Bank using money from a federal account must comply with all applicable federal requirements.

7. If a loan is made to a school district, the Bank may fix the rate of interest of the loan at 0 percent if the school district demonstrates to the Board of Directors that the school district has financial constraints that would not allow the school district to repay a loan with a rate of interest fixed according to the standards otherwise used by the Bank.

Sec. 11.7. NRS 408.55079 is hereby amended to read as follows:

408.55079 1. Except as otherwise provided in this section, if a qualified borrower that has obtained a loan or other financial assistance from the Bank fails to remit in full any amount due to the Bank on the date on which the amount is due under the terms of any note or other loan obligation given to the Bank by the qualified borrower, the Bank shall notify the appropriate state agencies or officers, including, without limitation, the State Controller, who shall withhold all or a portion of any state money or other money administered by the State and its agencies, boards and instrumentalities that is allotted or appropriated to the qualified borrower and apply an amount necessary to the payment of the amount due.

2. This section does not authorize the State or an agency, board or instrumentality thereof, or the State Controller, to withhold any money allocated or appropriated to a qualified borrower if to do so would violate the terms of:

(a) An appropriation by the Legislature;

(b) Any federal law;

(c) A contract to which the State is a party;

(d) A contract to which a governmental unit or qualified borrower is a party; ~~[or]~~

(e) A judgment of a court that is binding upon the State ~~[.]~~ ***; or***

(f) The provisions of NRS 387.121 to 387.12468, inclusive, governing apportionments and allowances from the State Education Fund.

Sec. 12. NRS 408.55081 is hereby amended to read as follows:

408.55081 The Board of Directors and any member thereof, and any officer, employee, agent or committee member of the Bank

is not liable in a civil action for any act performed on behalf of the Bank in good faith and within the scope of their duties or the exercise of their authority pursuant to NRS 408.55048 to 408.55088, inclusive ~~[.]~~, ***and sections 1.3 and 1.7 of this act.***

Sec. 13. NRS 408.55086 is hereby amended to read as follows:

408.55086 1. To the extent possible, the provisions of NRS 408.55048 to 408.55088, inclusive, ***and sections 1.3 and 1.7 of this act*** are intended to supplement other statutory provisions governing the development, construction, repair, improvement, maintenance, decommissioning, operation and ownership of transportation facilities, utility infrastructure, water and wastewater infrastructure, renewable energy infrastructure, recycling and sustainability infrastructure, digital infrastructure, ***K-12 school facilities,*** social infrastructure or other infrastructure related to economic development and the issuance of bonds and other securities by this State or a political subdivision thereof, and such other provisions must be given effect to the extent that those provisions do not conflict with the provisions of NRS 408.55048 to 408.55088, inclusive ~~[.]~~ ***, and sections 1.3 and 1.7 of this act.*** If there is a conflict between such other provisions and the provisions of NRS 408.55048 to 408.55088, inclusive, ***and sections 1.3 and 1.7 of this act,*** the provisions of NRS 408.55048 to 408.55088, inclusive, ***and section 1.3 and 1.7 of this act*** control.

2. The provisions of NRS 338.013 to 338.090, inclusive, apply to any contract for construction work on a qualified project if all or part of the costs of the qualified project are paid for using a loan or other financial assistance from the Bank. The Bank, the qualified borrower, any contractor who is awarded a contract or enters into an agreement to perform construction work on the qualified project, and any subcontractor who performs any portion of the construction work shall comply with the provisions of NRS 338.013 to 338.090, inclusive, in the same manner as if a public body had undertaken the qualified project or had awarded the contract.

Sec. 14. NRS 408.55088 is hereby amended to read as follows:

408.55088 Any division of the Department of Transportation, the Department of Business and Industry, the Office of Economic Development, the State Department of Conservation and Natural Resources, ~~[the Office of the State Treasurer,]~~ the Office of Energy or any other governmental unit may, to the extent that money is available for that purpose, provide technical advice, support and

assistance to the Bank ~~[.]~~ ***, including, without limitation, the Board of Directors.***

Sec. 15. NRS 239.010 is hereby amended to read as follows:

239.010 1. Except as otherwise provided in this section and NRS 1.4683, 1.4687, 1A.110, 3.2203, 41.0397, 41.071, 49.095, 49.293, 62D.420, 62D.440, 62E.516, 62E.620, 62H.025, 62H.030, 62H.170, 62H.220, 62H.320, 75A.100, 75A.150, 76.160, 78.152, 80.113, 81.850, 82.183, 86.246, 86.54615, 87.515, 87.5413, 87A.200, 87A.580, 87A.640, 88.3355, 88.5927, 88.6067, 88A.345, 88A.7345, 89.045, 89.251, 90.730, 91.160, 116.757, 116A.270, 116B.880, 118B.026, 119.260, 119.265, 119.267, 119.280, 119A.280, 119A.653, 119A.677, 119B.370, 119B.382, 120A.640, 120A.690, 125.130, 125B.140, 126.141, 126.161, 126.163, 126.730, 127.007, 127.057, 127.130, 127.140, 127.2817, 128.090, 130.312, 130.712, 136.050, 159.044, 159A.044, 172.075, 172.245, 176.015, 176.0625, 176.09129, 176.156, 176A.630, 178.39801, 178.4715, 178.5691, 179.495, 179A.070, 179A.165, 179D.160, 200.3771, 200.3772, 200.5095, 200.604, 202.3662, 205.4651, 209.392, 209.3923, 209.3925, 209.419, 209.429, 209.521, 211A.140, 213.010, 213.040, 213.095, 213.131, 217.105, 217.110, 217.464, 217.475, 218A.350, 218E.625, 218F.150, 218G.130, 218G.240, 218G.350, 224.240, 226.300, 228.270, 228.450, 228.495, 228.570, 231.069, 231.1473, 232.1369, 233.190, 237.300, 239.0105, 239.0113, 239.014, 239B.026, 239B.030, 239B.040, 239B.050, 239C.140, 239C.210, 239C.230, 239C.250, 239C.270, 239C.420, 240.007, 241.020, 241.030, 241.039, 242.105, 244.264, 244.335, 247.540, 247.550, 247.560, 250.087, 250.130, 250.140, 250.150, 268.095, 268.0978, 268.490, 268.910, 269.174, 271A.105, 281.195, 281.805, 281A.350, 281A.680, 281A.685, 281A.750, 281A.755, 281A.780, 284.4068, 284.4086, 286.110, 286.118, 287.0438, 289.025, 289.080, 289.387, 289.830, 293.4855, 293.5002, 293.503, 293.504, 293.558, 293.5757, 293.870, 293.906, 293.908, 293.910, 293B.135, 293D.510, 331.110, 332.061, 332.351, 333.333, 333.335, 338.070, 338.1379, 338.1593, 338.1725, 338.1727, 348.420, 349.597, 349.775, 353.205, 353A.049, 353A.085, 353A.100, 353C.240, 360.240, 360.247, 360.255, 360.755, 361.044, 361.2242, 361.610, 365.138, 366.160, 368A.180, 370.257, 370.327, 372A.080, 378.290, 378.300, 379.0075, 379.008, 379.1495, 385A.830, 385B.100, 387.626, 387.631, 388.1455, 388.259, 388.501, 388.503, 388.513, 388.750, 388A.247, 388A.249, 391.033, 391.035, 391.0365, 391.120, 391.925, 392.029, 392.147, 392.264, 392.271, 392.315, 392.317, 392.325, 392.327, 392.335, 392.850, 393.045, 394.167, 394.16975, 394.1698, 394.447, 394.460, 394.465,

396.1415, 396.1425, 396.143, 396.159, 396.3295, 396.405, 396.525, 396.535, 396.9685, 398A.115, 408.3885, 408.3886, 408.3888, 408.5484, 412.153, 414.280, 416.070, 422.2749, 422.305, 422A.342, 422A.350, 425.400, 427A.1236, 427A.872, 432.028, 432.205, 432B.175, 432B.280, 432B.290, 432B.4018, 432B.407, 432B.430, 432B.560, 432B.5902, 432C.140, 432C.150, 433.534, 433A.360, 439.4941, 439.4988, 439.840, 439.914, 439A.116, 439A.124, 439B.420, 439B.754, 439B.760, 439B.845, 440.170, 441A.195, 441A.220, 441A.230, 442.330, 442.395, 442.735, 442.774, 445A.665, 445B.570, 445B.7773, 447.345, 449.209, 449.245, 449.4315, 449A.112, 450.140, 450B.188, 450B.805, 453.164, 453.720, 458.055, 458.280, 459.050, 459.3866, 459.555, 459.7056, 459.846, 463.120, 463.15993, 463.240, 463.3403, 463.3407, 463.790, 467.1005, 480.535, 480.545, 480.935, 480.940, 481.063, 481.091, 481.093, 482.170, 482.368, 482.5536, 483.340, 483.363, 483.575, 483.659, 483.800, 484A.469, 484B.830, 484B.833, 484E.070, 485.316, 501.344, 503.452, 522.040, 534A.031, 561.285, 571.160, 584.655, 587.877, 598.0964, 598.098, 598A.110, 598A.420, 599B.090, 603.070, 603A.210, 604A.303, 604A.710, 612.265, 616B.012, 616B.015, 616B.315, 616B.350, 618.341, 618.425, 622.238, 622.310, 623.131, 623A.137, 624.110, 624.265, 624.327, 625.425, 625A.185, 628.418, 628B.230, 628B.760, 629.047, 629.069, 630.133, 630.2671, 630.2672, 630.2673, 630.30665, 630.336, 630A.327, 630A.555, 631.332, 631.368, 632.121, 632.125, 632.3415, 632.3423, 632.405, 633.283, 633.301, 633.4715, 633.4716, 633.4717, 633.524, 634.055, 634.1303, 634.214, 634A.169, 634A.185, 635.111, 635.158, 636.262, 636.342, 637.085, 637.145, 637B.192, 637B.288, 638.087, 638.089, 639.183, 639.2485, 639.570, 640.075, 640.152, 640A.185, 640A.220, 640B.405, 640B.730, 640C.580, 640C.600, 640C.620, 640C.745, 640C.760, 640D.135, 640D.190, 640E.225, 640E.340, 641.090, 641.221, 641.2215, 641.325, 641A.191, 641A.217, 641A.262, 641B.170, 641B.281, 641B.282, 641C.455, 641C.760, 641D.260, 641D.320, 642.524, 643.189, 644A.870, 645.180, 645.625, 645A.050, 645A.082, 645B.060, 645B.092, 645C.220, 645C.225, 645D.130, 645D.135, 645G.510, 645H.320, 645H.330, 647.0945, 647.0947, 648.033, 648.197, 649.065, 649.067, 652.126, 652.228, 653.900, 654.110, 656.105, 657A.510, 661.115, 665.130, 665.133, 669.275, 669.285, 669A.310, 671.170, 673.450, 673.480, 675.380, 676A.340, 676A.370, 677.243, 678A.470, 678C.710, 678C.800, 679B.122, 679B.124, 679B.152, 679B.159, 679B.190, 679B.285, 679B.690, 680A.270, 681A.440, 681B.260, 681B.410, 681B.540, 683A.0873, 685A.077, 686A.289, 686B.170, 686C.306,

687A.060, 687A.115, 687B.404, 687C.010, 688C.230, 688C.480, 688C.490, 689A.696, 692A.117, 692C.190, 692C.3507, 692C.3536, 692C.3538, 692C.354, 692C.420, 693A.480, 693A.615, 696B.550, 696C.120, 703.196, 704B.325, 706.1725, 706A.230, 710.159, 711.600, ***and section 1.7 of this act,*** sections 35, 38 and 41 of chapter 478, Statutes of Nevada 2011 and section 2 of chapter 391, Statutes of Nevada 2013 and unless otherwise declared by law to be confidential, all public books and public records of a governmental entity must be open at all times during office hours to inspection by any person, and may be fully copied or an abstract or memorandum may be prepared from those public books and public records. Any such copies, abstracts or memoranda may be used to supply the general public with copies, abstracts or memoranda of the records or may be used in any other way to the advantage of the governmental entity or of the general public. This section does not supersede or in any manner affect the federal laws governing copyrights or enlarge, diminish or affect in any other manner the rights of a person in any written book or record which is copyrighted pursuant to federal law.

2. A governmental entity may not reject a book or record which is copyrighted solely because it is copyrighted.

3. A governmental entity that has legal custody or control of a public book or record shall not deny a request made pursuant to subsection 1 to inspect or copy or receive a copy of a public book or record on the basis that the requested public book or record contains information that is confidential if the governmental entity can redact, delete, conceal or separate, including, without limitation, electronically, the confidential information from the information included in the public book or record that is not otherwise confidential.

4. If requested, a governmental entity shall provide a copy of a public record in an electronic format by means of an electronic medium. Nothing in this subsection requires a governmental entity to provide a copy of a public record in an electronic format or by means of an electronic medium if:

(a) The public record:

(1) Was not created or prepared in an electronic format; and

(2) Is not available in an electronic format; or

(b) Providing the public record in an electronic format or by means of an electronic medium would:

(1) Give access to proprietary software; or

(2) Require the production of information that is confidential and that cannot be redacted, deleted, concealed or separated from information that is not otherwise confidential.

5. An officer, employee or agent of a governmental entity who has legal custody or control of a public record:

(a) Shall not refuse to provide a copy of that public record in the medium that is requested because the officer, employee or agent has already prepared or would prefer to provide the copy in a different medium.

(b) Except as otherwise provided in NRS 239.030, shall, upon request, prepare the copy of the public record and shall not require the person who has requested the copy to prepare the copy himself or herself.

Sec. 16. NRS 241.016 is hereby amended to read as follows:

241.016 1. The meetings of a public body that are quasi-judicial in nature are subject to the provisions of this chapter.

2. The following are exempt from the requirements of this chapter:

(a) The Legislature of the State of Nevada.

(b) Judicial proceedings, including, without limitation, proceedings before the Commission on Judicial Selection and, except as otherwise provided in NRS 1.4687, the Commission on Judicial Discipline.

(c) Meetings of the State Board of Parole Commissioners when acting to grant, deny, continue or revoke the parole of a prisoner or to establish or modify the terms of the parole of a prisoner.

3. Any provision of law, including, without limitation, NRS 91.270, 219A.210, 228.495, 239C.140, 239C.420, 241.028, 281A.350, 281A.690, 281A.735, 281A.760, 284.3629, 286.150, 287.0415, 287.04345, 287.338, 288.220, 288.590, 289.387, 295.121, 315.98425, 360.247, 388.261, 388.385, 388A.495, 388C.150, 388D.355, 388G.710, 388G.730, 392.147, 392.466, 392.467, 392.4671, 394.1699, 396.1415, 396.3295, ***408.55069,*** 414.270, 422.405, 433.534, 435.610, 442.774, 463.110, 480.545, 622.320, 622.340, 630.311, 630.336, 631.3635, 639.050, 642.518, 642.557, 686B.170, 696B.550, 703.196 and 706.1725, which:

(a) Provides that any meeting, hearing or other proceeding is not subject to the provisions of this chapter; or

(b) Otherwise authorizes or requires a closed meeting, hearing or proceeding,

➥ prevails over the general provisions of this chapter.

4. The exceptions provided to this chapter, and electronic communication, must not be used to circumvent the spirit or letter of this chapter to deliberate or act, outside of an open and public meeting, upon a matter over which the public body has supervision, control, jurisdiction or advisory powers.

Sec. 16.5. (Deleted by amendment.)

Sec. 16.7. The terms of the members of the Board of Directors of the Nevada State Infrastructure Bank who were appointed pursuant to paragraph (f) of subsection 3 of NRS 408.55069, as that section existed before July 1, 2023, expire on June 30, 2023. Those members may be appointed to the Board of Directors of the Nevada State Infrastructure Bank pursuant to NRS 408.55069, as amended by section 10 of this act, to a position on the Board of Directors for which that person satisfies the qualifications for appointment.

Sec. 17. This act becomes effective on July 1, 2023.

20 ~~~~~ **23**

To: Board of Directors of the Nevada State Infrastructure Bank
From: Erik Jimenez, Secretary to the Board of Directors
Date: October 19, 2023
Re: State Infrastructure Bank – Agenda Item 5 – Staff Report

The following report has been prepared by Bank Staff to detail the administration and operations of the Nevada State Infrastructure Bank since the last meeting of the Board of Directors in 2022.

Administration / Operations:

Senate Bill 10 from the 82nd Session of the Nevada Legislature made several changes to the administration of the Bank. Most notably, the bill moved the administration of the Bank from the Nevada Department of Transportation into the State Treasurer's Office. The bill also made the State Treasurer the permanent Chair of the Board of Directors.

Additionally, SB 10 revised the makeup the Board of Directors to the Bank, while also increasing the Board to nine members. Since the passage and approval of the bill, eight of the nine board seats have been filled. The Board of Directors now consists of:

- State Treasurer - *Zach Conine, Chair*
- Director of the Department of Business and Industry - *Terry Reynolds*
- Executive Director of the Governor's Office of Economic Development – *Tom Burns*
- Gubernatorial Appointment (County less than 700,000) – *Jesse Haw*
- Gubernatorial Appointment (County less than 100,000) – *Blayne Osborn*
- Senate Majority Leader Appointment (Building Trades Unions) – *Tracy Holland*
- Senate Majority Leader Appointment (Housing and/or hospitality) – *Ken Liu*
- Assembly Speaker Appointment (Banking) – *Matt Kershaw*
- Assembly Speaker Appointment (Tribal Representative) – *Vacant*

Since the passage of the SB 10, the Treasurer's Office staff has worked to ensure that the Bank's operations have continued seamlessly by working to service the Bank's public-facing website, serving as staff to the Board of Directors, evaluating financing applications that have been submitted by potential borrowers, and working to increase the awareness of the Bank to local governments, Tribal governments, and non-profit organizations.

Since Governor Lombardo has not yet named an individual to serve as the new Executive Director of the Bank, the Treasurer's Office staff will continue to perform these functions as long as necessary.

2024-2025 Legislatively Approved Budget:

As a result of budget decisions made during the 82nd Session of the Nevada Legislature, the Bank's operational expenses will continue to be funded from the Consolidated Bond Interest and Redemption Fund (Budget Account 1082) for the 2024-2025 biennium.

The total operational expenses available to the Bank for this biennium are:

- Fiscal Year 2024: $273,874
- Fiscal Year 2025: $258,681

Total Financial Resources Available to the Bank:

In April 2022, the State Treasurer's Office Completed the sale of $75 million in limited-tax General Obligation Bonds to initially capitalize the State Infrastructure Bank.

As part of this bond issuance $40,000,000 was issued in Series 2022A and $35,000,000 was issued as part of Series 2022B (Social Bonds). The cost of issuance for both series of bonds was $238,288, which left the Bank with the net proceeds of $74,761,712 to utilize for loans and other financial assistance to provide to qualified borrowers.

Since the bond sale was completed in 2022, the State Treasurer's Office has invested the funds available to the State Infrastructure Bank in accordance with the investment policy previously adopted by the Board of Directors. As a result of actions made by the Federal Reserve coupled with changing market conditions, the Treasurer's Office has seen significant increases in overall investment returns for the State.

As of October 13, 2023, the Treasurer's Office has generated an additional $1,885,493 on initial bond proceeds for the State Infrastructure Bank. This brings the total amount of funds available for the Bank to provide loans and other financial assistance to qualified borrowers to $76,647,205.

The account balances for the Bank's various loan accounts as of October 13, 2023, are as follows:

- The Affordable Housing Revolving Account *(Budget Account 4673)* - $20,436,046
- The Charter School Capital Needs Revolving Account *(Budget Account 4674)* - $15,328,822
- The Federal Infrastructure Matching Account (Budget Account 4675) - ~~$41,4~~ $40,882,337

Additionally, in the 35th Special Session of the Nevada Legislature, Senate Bill 1 appropriated a transfer of $14,000,000 from the State's General Fund to the Bank. This appropriation is authorized to serve as a credit enhancement for the bonds that will be issued by Clark County in the event that Major League Baseball approves a plan for one of teams to relocate to Southern

Nevada. This $14,000,000 is being held in Budget Account 4672, which is the primary account for the Bank.

Staffing / Positions:

The Bank has two approved positions for the Fiscal Year 2024-2025 biennium which include:

- An unclassified Executive Director (appointed by the Governor); and
- A classified Administrative Assistant III position.

Since Governor Lombardo has not yet made a new appointment for the Executive Director of the Bank, the staff from the State Treasurer's Office has been performing the functions of the Executive Director position in the interim.

To ensure that a newly appointed Executive Director can hit the ground running, the Treasurer's Office posted the Administrative Assistant III position and has been interviewing potential candidates over the last several weeks. The Treasurer's Office expects to make a hiring decision on the Administrative Assistant III position soon.

To: Board of Directors of the Nevada State Infrastructure Bank
From: Erik Jimenez, Secretary to the Board of Directors
Date: October 19, 2023
Re: Agenda Item 6 - Update on financing applications received by the Nevada State Infrastructure Bank

---

Since the Board of Directors for the Nevada State Infrastructure Bank ("Bank") last met on October 12, 2022, the Bank has received three additional financing applications from prospective borrowers.

Pursuant to NRS 408.55063, a qualified borrower that is eligible to receive a loan or other financial assistance from the Bank is defined as "a governmental unit, an Indian reservation or Indian colony or a private nonprofit entity created for charitable or educational purposes."

Bank staff has preliminarily reviewed these applications and will be working on the full regulatory review of these applications as required under LCB File No. R017-22 after the conclusion of the October 2023 meeting of the Bank's Board of Directors.

Application #1: Carville Park Apartments

- **Applicant:** Northern Nevada Building and Construction Trades Council Development Corporation
- **Project:** Carville Park Apartments
- **Location:** 1224 Carville Park, Reno, NV 89512
- **Amount Requested:** $7,000,000 from the Bank's Affordable Housing Revolving Account

The Carville Park Apartments are currently a 52-unit (208 bed) 100% subsidized Section 8 project currently serving low-income residents in Reno with an emphasis on elderly tenants as well as those with disabilities. The 4.4-acre site currently houses a two-story garden style community, which has been operated by the Northern Nevada Building and Construction Trades Council Development Corporation since its original construction in 1979.

Under this proposed project, the Applicant plans to convert the existing 52 shared quad units into 208 private studios and 1-bedroom units, each with a full kitchen, bathroom, and living space.

This project would be a partnership with the Applicant, the Canopy Companies, and the AFL-CIO's Housing Investment Trust. The AFL-CIO Housing Investment Trust has committed to investing a total of $67,875,000 to support this project, which would leverage the proposed investment by the Bank by 9.7 times.

An expected breakdown of pension matching investment from the AFL-CIO Housing Investment Trust for this project is included below:

Pension Matching Investment

Summary of the investment commitment(s) made by the AFL-CIO Housing Investment Trust (AFL-CIO HIT), the funding request from the Nevada State Infrastructure Bank (NIB) and the multiplier the Bank is expected to generate on it's investment.

Source of Funds	Investment
AFL-CIO HIT Investment: Construction financing through direct tax credit equity bridge loan	14,000,000
AFL-CIO HIT Investment: Construction financing through purchse of tax exempt private activity bonds	30,000,000
AFL-CIO HIT Investment: Construction and permanent financing through purchse of HUD 221(d)(4).	23,875,000
AFL-CIO HIT Investment: Total	**67,875,000**
NV State Infrastructure Bank Investment	7,000,000
NIB Investment Multiplier	**9.70x**

NIB Investment Multiplier = AFL-CIO HIT Total Investment / NIB Investment
Source: The Canopy Companies, Internal Financial Projections •

The Applicant estimates that there will be $50,100,000 in total economic impact from this project, which would generate $2,100,000 in State and Local taxes as a result of the project. The Applicant also estimates that the project will result in the creation of 286 jobs and the retention of 5 jobs, which includes:

- Direct Jobs: 147 (294,375 project work hours) with average wage and benefits of $61.60/hour;
- Indirect Jobs: 40 with average wage and benefits of $32.10/hour;
- Induced Jobs: 99 with average wage and benefits of $29.30; and
- Retained jobs: 5 with average wage and benefits of $31.00/hour.

Bank staff has done a preliminary review of this application and has determined that the application is complete.

Copies of the financing application that was submitted to the Bank, along with supporting exhibits and documentation are included in the Board Meeting Packet.

Application #2: West Wendover Fire Station Emergency Operations Center

- **Applicant:** City of West Wendover
- **Project:** Fire Station/Emergency Operations Center
- **Location:** 1113 N. Gene L. Jones Way, West Wendover, NV 89883
- **Amount Requested:** $1,642,643 from either the Federal Infrastructure Matching Account or the State Infrastructure Bank General Account

The City of West Wendover has applied to the Bank to obtain gap financing for the West Wendover Fire Station Emergency Operations Center ("WWFS-EOC") project, which includes the construction of a facility of approximately 11,300 square feet in size.

The proposed facility would include just over 2,100 square feet of office and general operations space, along with 9,400 square feet of apparatus bays and support areas. According to the Applicant, the facility is designed to accommodate future expansion for the city as needs develop, including expansions to office areas, training rooms, storage and living quarter components for public safety personnel.

The total cost for the proposed WWFS-EOC is $13,574,691, of which the applicant has already secured $11,932,068 in funding. A breakdown of the various sources of funding for the project is included in the table below:

Source of Funding	Amount
USDA Rural Development Loan	$8,906,800
Cash supplied by the Applicant	$2,325,268
Nevada Community Development Block Grant Funds (GOED)	$500,000
USDA Grant	$200,000
Proposed SIB Gap Financing	$1,642,623
Total	**$13,574,691**

Using an analysis performed by the Nevada Governor's Office of Economic Development, the Applicant expects that this project will result in 98 construction and development jobs for the project with an average wage of $53.84/hour.

Additionally, the Applicant expects that project will result in 16 full-time fire department personnel positions that will be created through this project with an average wage of $40.77/hour.

Bank staff has done a preliminary review of this application and has determined that the application is complete.

Copies of the financing application that was submitted to the Bank, along with supporting exhibits and documentation are included in the Board Meeting Packet.

Application #3: Lincoln County Power District Local Generation and Resiliency System

- **Applicant:** Lincoln County
- **Project:** Lincoln County Power District Local Generation and Resiliency System
- **Location:** Crestline Road, Panaca, NV 89042
- **Amount Requested:** $5,000,000 from either the Federal Infrastructure Matching Account or the State Infrastructure Bank General Account

Lincoln County is seeking to partner with the SixCo Nevada, Inc. to build a Local Generation and Resiliency System for the Lincoln County Power District ("LCPD"). The project is intended to

replace the open-market energy purchases which are regularly made by the LCPD, with a 10-megawatt solar generation facility and energy storage system, with an accompanying 17 miles of transmission lines to connect the LCPD grid to the generation facility.

Overall, this anticipated $45.35 million project is intended to create a local source of renewable energy generation within Lincoln County, thereby replacing the electricity which LCPD has to purchase on the open market to make up for the shortfall of electricity available from Hoover Dam. In calendar year 2022, these open market purchases led to an approximate $935,000 operating loss for the LCPD. As a result, customer rate increases have occurred to offset this loss - thereby reducing the disposal income available to Lincoln County residential and non-residential customers.

The Applicant is anticipating applying to the USDA for funding to support the project through the Powering Affordable Clean Energy (PACE) Program authorized by the Inflation Reduction Act. In order to prepare its application to the USDA for PACE Program funding, Lincoln County has applied to the Bank for $5,000,000 in funding for working capital to allow the County and its development partner to prepare necessary feasibility studies and secure the land for the project.

Since the Applicant has not yet completed all the exhibits required by the Bank in its Financing Application, Bank staff is working with the Applicant to complete these items before it can be brought forward to the Board of Directors for its consideration.

Copies of the financing application that was submitted to the Bank, along with supporting exhibits and documentation are included in the Board Meeting Packet.



Nevada State Infrastructure Bank

Financing Application

Nevada State Infrastructure Bank Overview:

The Nevada State Infrastructure Bank was established to provide low-cost financing to Nevada state agencies, local governments, Tribal governments, and non-profit organizations for priority infrastructure projects.

Pursuant to Chapter 408 of the Nevada Revised Statutes, the Bank can provide financing for a variety of infrastructure projects, including: transportation facilities, utility infrastructure, digital infrastructure, recycling and sustainability infrastructure, renewable energy infrastructure, social infrastructure, water and wastewater infrastructure, and other infrastructure related to economic development.

The Bank has been capitalized with an initial $75 million in State general obligation bonds, which will be expended in the following project categories within the Nevada State Infrastructure Bank Fund:

- $40 million for projects through the Federal Infrastructure Matching Account;
- $20 million for projects through the Affordable Housing Revolving Account; and
- $15 million for projects through the Charter School Capital Needs Revolving Account.

In evaluating applications, the Bank will also seek to leverage outside capital and federal funding to help finance projects that improve quality of life, strengthen Nevada's climate resiliency, and help to promote a strong economy for communities across the State.

Application Instructions:

Please complete all sections of the application below and attach any required exhibits to request financing from the Nevada State Infrastructure Bank.

Prior to applying to the Bank for financing, please familiarize yourself with all the statutes and regulations governing the operation of the Bank.

The relevant statutory provisions can be found in Chapter 408 of the Nevada Revised Statutes (NRS 408.55048 – 408.55088).

Additionally, the approved regulation governing the Bank provides clarity on the application process as well as the requirements set forth for projects eligible under the Federal Infrastructure Matching Account, the Affordable Housing Revolving Account, and the Charter School Capital Needs Revolving Account.

Once submitted, applications for financing will be vetted by staff of the Bank and may be presented to the Board of Directors of the Nevada State Infrastructure Bank for consideration.

Completion of an application does not guarantee funding for a project.

Once complete, all applications can be submitted via email or mailed to:

Erik Jimenez
Chief Policy Deputy, Nevada State Treasurer's Office
Secretary to the Board of Directors of the Nevada State Infrastructure Bank

Nevada State Capitol
101 North Carson Street, Suite 4
Carson City, Nevada 89701
ejimenez@nevadatreasurer.gov

Part 1: Applicant Information

Legal Name of the Applicant:

Northern Nevada Building & Construction Trades Council Development C

Type of Applicant:

☐ Governmental Unit

☐ Indian Reservation or Colony

☒ Private Non-Profit Organization created for charitable or educational purposes

If applicant is a governmental unit or non-profit organization, please explain:

Northern Nevada Building & Construction Trades Council Development Corporation is a Nevada nonprofit corporation, tax exempt under Section 501(c)(3) of the internal revenue code that has been diligently serving its mission of providing affordable housing to the residents of northern Nevada since its founding in 1978. The Northern Nevada Building & Construction Trades Council Development Corporation has decades of experience owning, developing, operating, and managing affordable apartment complexes. For a majority of that time there were two properties in its portfolio: Centennial Park Apartments and Carville Park Apartments. Centennial Park

Mailing Address of the Applicant:

Street Address: 1819 Hymer Ave., Suite 106

City, State, Zip Code: Sparks, Nevada, 89431

Name of the Individual Submitting this Application:

Rob Benner

Role/Title of the individual submitting the application:

Secretary-Treasurer

Address for the individual submitting the application:

Street Address: 1819 Hymer Ave., Suite 106

City, State, Zip Code: Sparks, Nevada, 89431

Email for Individual submitting the application:

rbenner@bctnn.org

Phone number of individual submitting this application:

(775) 355-9200

Please list the contact information (Name, Address, Phone, Email) for other authorized individuals associated with the project (i.e., consultants, advisors, engineers, attorneys, etc.)

Name: Victor Atkins Organization: The Canopy Companies Street Address: 801 E Quincy Street City, State, Zip: San Antonio, TX 78203	Title: Partner Phone: (805) 708-1195 Fax: NA E-mail: victor@saguaro-residential.(
Name: Organization: Street Address: City, State, Zip:	Title: Phone: Fax: E-mail:

Part 2: Financing Requested

What type of financial assistance is the Applicant seeking? (Please select all that apply)

- [x] Loan
- [ ] Grant
- [ ] Other Financial Assistance

Financing Amount Requested:

$7,000,000

Is the State Infrastructure Bank origination fee included in financing? (Please reference the regulations governing the Nevada State Infrastructure Bank)

- [x] Yes
- [ ] No

Financing term requested (Number of years):

35 years

Source of financing repayment:

- [ ] Enterprise Fund
- [ ] Special Fund
- [ ] General Fund Lease
- [ ] Assessment District
- [ ] Special Taxes/Property Related Assessments
- [ ] Voter approved general obligation debt
- [x] Other

Please explain the source(s) of financing repayment:

The note is projected to be repaid through a combination of distributable operating cash flow and sale and/or refinance proceeds. See Exhibit 8F Page 23 for a detailed schedule of the projected repayment schedule.

Part 3: Project Information

Project Name:

Carville Park Apartments

Project Address:

Street Address: 1244 Carville Park

City, State, Zip Code: Reno, NV 89512

Project Category (Please reference Chapter 408 of the Nevada Revised Statutes):

- ☐ Transportation Facility
- ☐ Utility Infrastructure
- ☐ Water and Wastewater Infrastructure
- ☐ Renewable Energy Infrastructure
- ☐ Digital Infrastructure
- ☐ Recycling and Sustainability Infrastructure
- ■ Social Infrastructure
- ☐ Other Infrastructure related to Economic Development

If the project category selected was "Other Infrastructure related to Economic Development" please explain the project:

N/A

Is the project located in any of the following? (Please select all that apply)

☒ In a qualified census tract as designated by the United States Secretary of Housing and Urban Development pursuant to 26 U.S.C. § 42(d)(5)(B)(ii)

☒ In a census tract which has a high level of social vulnerability as determined according to the Social Vulnerability Index developed by the Centers for Disease Control and Prevention of the United States Department of Health and Human Services

☒ In a community which has a large percentage of the population having limited English proficiency

☐ In a community that has been subject to historical instances of redlining, segregation or other discriminatory practices

Is any part of the proposed project located on Tribal land?

☐ Yes

☒ No

Please attach a detailed description of the project. If the funding request is limited to a portion of the project, please identify as appropriate. If you have a feasibility study, a capital improvement plan, environmental study, or other such reports containing a detailed description of the project, please include as appropriate.

Attach all necessary documents as Exhibit 1. [Please label and attach items as Exhibits 1a, 1b, 1c, etc.]

If funding for the project is approved by the Nevada State Infrastructure Bank Board of Directors, how long will it take for this project to be completed?

If the Project is approved by the Nevada State Infrastructure Bank Board of Directors, it will take approximately two years to complete. The anticipated development timeline is set out in detail on Exhibit 5B.

Please list applicable permits for the project:

Type of Permit (Please include permit number)	Granting Authority	Date Submitted	Date Received	Expiration Date

Please complete the attached Project Sources and Uses of Proceeds Table (located on page 22 of this document) as Exhibit 2. Attach any and all cost estimates, bids, project labor agreements, and construction contracts, if available. [Please label and attach them as Exhibits 2a, 2b, 2c, etc.]

Please provide for any and all documentation commitment(s) for project funding sources other than financing from the State Infrastructure Bank. This could include resolutions, grant agreements, loan agreements, contracts, etc. [Please label and them as Exhibit 3 – if multiple documents are needed, please label and attach as Exhibits 3a, 3b, 3c, etc.]

Is land acquisition a component of the project?

☐ Yes

■ No

If yes, please provide a copy of the purchase agreement as Exhibit 4. Include a description of the land that has been or will be acquired (current owner, address, assessor's parcel number, purchase date or expected purchase date, cost or estimated cost), and identify the funding source(s) for the land below:

Description: Carville Park Apartments with current improvements consisting of 52 4-bedroom/4-bath " quad units " spread across ten (10) 2-story garden style residential buildings (1979 YOC) and a standalone single story community building (1979 YOC) comprised of the project ' s leasing office, community center, mail center and on site manager ' s unit.

Current Owner: Northern Nevada Building & Construction Trades Council Development Corp

Address: 1244 Carville Park, Reno NV, 89512

Does the applicant already own the land needed for the project?

☒ Yes

☐ No

Please provide a comprehensive project timeline as Exhibit 5. Include specific project milestones such a preliminary engineering report, all required permits, design, engineering, land/right-of-way acquisition, preparation of bid documents, awarding of construction contract, construction start date, construction completion date, and the date that the project will become operational.

Private Activity - Will any entity, including a governmental entity other than the Applicant, use or directly benefit from any portion of the Project other than as a member of the general public? (For example, will a private entity or a federal agency operate, or lease space in the proposed project?)

☐ Yes

☒ No

If yes, please describe the entity that will use or otherwise benefit from the Project. Provide a copy of the agreement(s) with such private entity, or federal agency. [Please label and attach as Exhibit 6.]

N/A

Will financing be used to finance more than 5 percent of any private activity costs?

☐ Yes

☒ No

If yes, please explain:

N/A

Business Relocation – Will the proposed Project require the relocation of a private sector business from one area of the State to another?

☐ Yes

☒ No

If yes, please provide a justification to support the move:

N/A

Please describe any economic and/or community benefits that will result from the completion of this project. Please include the method, or calculation by which these results were identified:

Overview:
- $50.1 million economic impact
- $2.1 million state and local taxes
- $7.3 million in total taxes

Social Impact: Preserve At-risk Affordable Housing --
There is a widespread shortage of affordable and available housing both nationally and locally, especially for the lowest-income renters. This Project would preserve and drastically improve existing affordable homes primarily occupied by low and extremely

What are the total number of jobs that will be created and the average wage for the project? (Please include the method or calculation by which these results were identified)

Direct Jobs: 147 (131 construction plus 16 other) (294,375 hours of work) (average hourly wage & benefits: $61.60)

Indirect Jobs: 40 (76,865 hours of work) (average hourly wage & benefits: $32.10)

Induced Jobs: 99 (183,744 hours of work) (average hourly wage & benefits: $29.30)

Method of Calculation: AFL-CIO HIT Internal Economic Projections

What are total number of jobs retained and the average wage? (Please include the method or calculation by which these results were identified)

Retained Jobs: 5 (10,400 hours of work) (average hourly wage & benefits: $31.00)

Method of Calculation: AFL-CIO HIT Internal Economic Projections

Describe the environmental impact that will result from this project? (Please include the method or calculation by which these results were identified)

Environmental Impact: Sustainable Design, Construction & Operations --
The Project aims to be a leading example of sustainable residential housing design, construction and operations. The Project's commitment to high-quality and sustainable building practices is evident in the design choices and selection of environmentally friendly materials and energy efficient and water saving fixtures and finishes. The Projects plans for 100% of the units to be ENERGY STAR certified multifamily units meeting the ENERGY STAR Multifamily New Construction National program requirements and Nevada state energy requirements. The Project is pursuing the integration of solar panels on roofs and

Does this project comply with the with the standards and goals set forth in the 2020 Nevada Climate Strategy and the goals for the reduction of greenhouse gas emissions set forth in NRS 445B.380 and 704.7820?

- [x] Yes
- [ ] No
- [ ] Unsure

Useful Life - Please provide evidence detailing the useful life of the Project. Useful life is defined as the estimated number of years the project is anticipated to remain in service. Please include estimated useful life projections with and without any anticipated maintenance costs. [Label and attach as Exhibit 7]

Is this project eligible to apply for funding from the Affordable Housing Revolving Account within the Nevada State Infrastructure Bank Fund? (Please reference the Nevada State Infrastructure Bank regulations for the guidelines and policies for the Affordable Housing Revolving Account.)

- [x] Yes
- [ ] No
- [ ] Unsure

Is this project eligible to apply for funding from the Charter School Capital Needs Revolving Account within the Nevada State Infrastructure Bank Fund? (Please reference the Nevada State Infrastructure Bank regulations for the guidelines and policies for the Charter School Capital Needs Revolving Account.)

- [ ] Yes
- [x] No
- [ ] Unsure

Is this project eligible to apply for funding from the Federal Infrastructure Matching Account within the Nevada State Infrastructure Bank Fund? (Please reference the Nevada State Infrastructure Bank regulations for the guidelines and policies for the Federal Infrastructure Matching Account.)

☒ Yes

☐ No

☐ Unsure

Is this project eligible to apply for funding from the State Infrastructure Bank General Account within the Nevada State Infrastructure Bank Fund? (Please reference the Nevada State Infrastructure Bank regulations for the guidelines and policies for the State Infrastructure Bank General Account.)

☐ Yes

☒ No

☐ Unsure

Part 4: Financial Information

Please provide copies of the five most recent fiscal year-end audited financial statements for the applicant and related parties to the project, if not already provided, as well as applicable revenue projections and cash flows. [Label and attach as Exhibits 8a, 8b, 8c, etc.]

Please provide the current year's adopted budget as Exhibit 9.

Are there any events or circumstances that have occurred since the date of the last financial statement could materially affect the overall financial condition of the Applicant?

☐ Yes

☒ No

If yes, please explain:

N/A

In the table below, please list all outstanding financing obligations (debts, notes, capital leases, etc.) secured by the source of repayment for the requested financing. Attach as Exhibit 10, and include a copy of all financing documents (e.g., the official statement along with any underlying loan agreements, lease agreements, or indentures, etc.) [Label and attach as Exhibits 10a, 10b, 10c, etc.]

Name of Lender	Date of Debt	Outstanding Balance (as of _____)	Maximum Annual Debt Service/Lease Payment
NA		$	$
		$	$
		$	$
		$	$

Please provide a description of any off-balance-sheet debt obligations, including capital leases and other contractual obligations:

N/A - The applicant does not currently have any on or off-balance sheet long term financial obligations. However, the Project does anticipate securing financing from mutliple other sources as detailed in Exhibit 8F.

Has the Applicant defaulted on any debt or other obligation including, but not limited to, bonds, leases, or loans within the last ten years?

☐ Yes

☒ No

If yes, please specify the date(s) and circumstances:

N/A

Please attach as Exhibit 11 the current Capital Improvement Plan. Explain below any expected plan for future debt issuance:

See development narrative for details.

Does the Applicant have an Inter-fund Transfer Policy?

☐ Yes

☒ No

If yes, please attach a copy of the policy as Exhibit 12.

Is the Applicant planning on utilizing any collateral in order to receive a loan or other financial assistance?

☒ Yes

☐ No

If yes, please explain:

The Property and associated cash flow will be used as collateral for obtaining loans and other financing for the Project. See Exhibit 8F for details.

Part 5: Loan Proceeds

Will the loan proceeds pay for any general administration or overhead costs?

☐ Yes

☒ No

Have any general administration or overhead costs already been incurred?

☐ Yes

☒ No

If yes, please explain:

N/A

Will the Project include the payment of prevailing wages as set forth in NRS Chapter 408?

☒ Yes

☐ No

Will loan proceeds finance preliminary costs for the Project?

☒ Yes

☐ No

Have any preliminary costs already occurred?

☒ Yes

☐ No

If yes, please explain:

De minimis preliminary costs have been incurred as part of the Partnership's due diligence and evaluation of the feasibility of the Project.

Part 6: Legal Information

Please describe the composition of the Applicant's governing body, including the number of positions, term, and the selection/appointment process. Additionally, please provide a current list of individuals in these positions:

Northern Nevada Building & Construction Trades Council Development Corporation is governed by its board of trustees. The board of trustees consists of six positions. The term of each trustee's service on the board continues until their resignation, death or removal. Trustees are elected by the members from the membership. The individuals currently serving on the board of trustees are: President Russ James, Vice-President Tracy Holland, Secretary-Treasurer Rob Benner, Trustee Jacob Haas, Trustee Scott Fullerton, and Trustee Gary Watson.

Please describe any pending or anticipated litigation and/or contractual disputes that the Applicant is a party to:

None

Please describe any past, present, or potential issues or controversies that may impact the Project:

None

For any applicant that is a Charter City, please attach as Exhibit 13 a copy of the City's Charter including all addendums and supplements thereto.

For any applicant that is a School District, Special District, or Joint Powers Authority (JPA), please provide the statutory citation of formation authority or attach a copy of all formation documents and amendments as Exhibit 14.

For any applicant that is a non-profit organization, please provide as Exhibit 15, a copy of the following:

a. Articles of Incorporation, together with all amendments.

b. Certificate of Status/Good Standing in the State of Nevada.

c. Bylaws, together with all amendments.

d. 501 (c)(3) Determination Letter(s) from the IRS, and any related documents and correspondence with/from the IRS.

e. All Form 990s for the last three years

f. All Form 990-Ts for the last three years.

g. Capital Campaign brochures, forms, pledge cards, and related materials, if any.

DocuSign Envelope ID: EF8758D6-A496-4564-9DB3-B143F6FF9482

I acknowledge that:

All information submitted to the Nevada State Infrastructure Bank is true and correct at the time of submission, and such information does not contain any untrue or misleading statement of a material fact or omits to state any material fact necessary to make the statements contained herein not misleading.

By signing below, I acknowledge that I understand that it is unlawful to knowingly make a false claim, a false statement, use a false of fictitious name, or obtain money or benefit under false pretenses. I understand these acts are a violation of the laws of the State of Nevada punishable by civil penalties, including repayment, and/or criminal penalties including up to a category D felony and six years in state prison.

Print Name: Rob Benner

Print Title: Secretary-Treasurer

Authorized Signature: DocuSigned by: 9BBB72AAA06549B... _____

Date: 7/10/2023

Application Checklist

(Complete and submit with the Financing Application)

SIB Staff Use	INDICATE WHETHER OR NOT EACH DOCUMENT IS ATTACHED TO THIS APPLICATION			APPLICATION EXHIBITS	
Date Rec'd	***YES***	***NO***	***N/A***		
	X			Application	Signed and Dated
	X			Exhibit 1	Study, Plan, or Other Report with Detailed Project Description
	X			Exhibit 2	Sources and Uses of Proceeds Table
	X			Exhibit 2a	Detailed cost estimates, bids, and construction contracts, that support Exhibit. Label each Exhibit a, b, c, etc.
	X			Exhibit 3	Documentation Demonstrating Commitment of Other Project Funding Sources (includes Applicant's contribution). Label each Exhibit a, b, c, etc.
	X			Exhibit 4	Real Estate Purchase Agreement
	X			Exhibit 5	Project Timeline
	X			Exhibit 6	Project Benefit Information
	X			Exhibit 7	Useful Life Exhibit
	X			Exhibit 8	Five (5) Years Audited Financial Statements [and any applicable revenue projections and cash flows]. Label each Exhibit a, b, c, etc.
	X			Exhibit 9	Current Year Adopted Budget
	X			Exhibit 10	Outstanding Financing Documents. Label each Exhibit a, b, c, etc.
	X			Exhibit 11	Current Capital Improvement Plan
			X	Exhibit 12	Interfund Transfer Policy/Reimbursement Agreement
			X	Exhibit 13	Charter City Information and Questionnaire
			X	Exhibit 14	Districts Formation Documents and Amendments
	X			Exhibit 15	Non-Profit Applicants Exhibits. Label each Exhibit a, b, c, etc.

REDEVELOPMENT OF CARVILLE PARK APARTMENTS
1244 CARVILLE DRIVE, RENO, NEVADA 89512
APN: 008-086-07; 008-086-07

June 8, 2023

Via E-Mail
Erik Jimenez
Chief Policy Deputy, Nevada State Treasurer's Office
Secretary to the Board of Directors of the Nevada State Infrastructure Bank
101 North Carson Street, Suite 4
Carson City, NV 89701

Re: Request for $7.0M in Funding to Facilitate the Preservation & Reconstruction of Carville Park
An aging affordable housing community currently home to 209 very low-income (VLI) and extremely low income (ELI) elderly households.

The city of Reno is a model city in many ways—in commerce, recreation, and amenities, just to name a few. The secret to its successes? It listens to and solves the needs of its people. City leadership and the Nevada State Treasurer's Office have recognized the housing challenges that exist today and are addressing those challenges through diverse and creative solutions.

The Canopy Companies, in partnership with the Northern Nevada Building & Construction Trades Council Development Corporation are committed to being part of the solution and are proud to present what we believe is poised to be another model of progress: Carville Park Apartments, a redevelopment project that will preserve some of the city's most at risk housing, provide a greater sense of home to those most in need, and empower and reward the men and women of the construction trades who will be integral to the Project's success. The proposed redevelopment will preserve 209 units of housing in the heart of Reno—100% affordable—serving those with income levels at or below 50% of AMI—with onsite services and staff.

The Project is the result of a new strategic joint venture between the Northern Nevada Building & Construction Trades Council Development Corporation ("NNBCTC DevCorp"), a Nevada nonprofit with the mission of providing affordable housing to the residents of northern Nevada, and The Canopy Companies ("Canopy"), an affordable housing development company with a focus on historic preservation and environmentally sustainable construction (the "Partnership"). The Partnership was formed with the objective of improving the quality of life for low-income residents in northern Nevada while empowering the workforce that is critical to any project's success.

In keeping with the Partnership's dual mandate, the Project provides the ideal opportunity to preserve the long-term affordability of 209 units of affordable housing and transform the Property to better meet the needs of those it serves. Originally constructed in 1978, the proposed redevelopment of Carville Park Apartments (the "Property" or "Project") aims to deliver high-quality, environmentally sustainable housing, well-positioned to remain affordable in perpetuity. The plan includes a full renovation of the units, amenities and common spaces including a reconfiguration of all the existing, functionally obsolete shared "quad" units into a mix of 209 private studios and 1-bedroom units, each with a full kitchen, bathroom, and living space. The Property's exterior will undergo a complete transformation and a range of new amenities and services will be available to residents, including supportive services, recreational activities, and community events. The goal of the Project is to create functional and efficient living spaces while improving the residents' health, wellness, and happiness.

As part of our commitment to environmental sustainability, the Project plans to install a state-of-the-art roof and carport mounted solar energy storage system, enabling the Property to generate its own renewable energy. To further improve energy efficiency, new windows, LED lighting, water-efficient fixtures, ENERGY STAR appliances, and modernized heating and cooling systems will be installed—all aimed at reducing the Property's environmental impact.

The Project will prioritize union labor both during construction and throughout operations and is committed to honoring prevailing wages and embracing the use of apprentices. The Project is estimated to create 131 high-quality construction jobs (264,000 hours) as well as six permanent positions. The Project will not only be a vehicle for job creation but will also assist with bringing new workers into the profession and improving economic outcomes for the residents of Nevada.

We believe that Carville Park Apartments has the potential to be a model for a new type of affordable housing—a model that benefits all—from the apprentice carpenter working on their first job to the disabled veteran regaining their independence and rediscovering what it feels like to call a place home. Perfectly aligned with the Nevada State Infrastructure Bank's commitment to alleviating Nevada's affordable housing crisis, the Project is seeking $7.0M in funding through the Bank's Affordable Housing Revolving Account. A commitment from the Bank is critical to the feasibility of the $50M proposed redevelopment of Carville Park Apartments and the preservation of its 209 at-risk units.

Sincerely,

V. Atkins

Victor Atkins
Partner, The Canopy Companies

Rob Benner

Rob Benner
Secretary-Treasurer,
Northern Nevada Building & Construction
Trades Council Development Corporation

Background

Carville Park Apartments (the "Property") is a 52-unit (208-bed) 100% subsidized Section 8 project currently serving low-income residents with an emphasis on the elderly and disabled. Spanning 4.4 acres, the 2-story garden style community has been owned and operated as affordable housing by the Northern Nevada Building & Construction Trades Council Development Corporation since its original construction in 1979.

Metro Area	Reno-Sparks MSA
Address	1244 Carville Drive
City, State	Reno, Nevada
Zip Code	89512
Census Tract	18.01

Today, as Reno, like many cities, faces an increasingly severe shortage of affordable housing, the existence of projects like Carville Park Apartments has grown in importance. The housing crisis has reached a tipping point, leaving the most vulnerable members of the community with limited options for a place to call home. The demand for affordable housing, especially among those with the lowest incomes, continues to rise while the number of available units dwindles at an alarming rate.

Affordable Demand: ▲ +20%

Over the past 10-years, the number of elderly households living in the Reno metro with annual incomes at or below $34,499 has increased by +2,951 (20.3%).

Affordable Supply: ▼ -34%

Over the same period, the metro has seen a 34% reduction in the supply of rental housing affordable to low-income households (at 3x rent to income).

Carville Park Apartments currently makes up a significant portion of the affordable housing available for those at the lowest income levels and ensuring its long-term preservation and affordability is imperative for not only the residents but the community as a whole. The Partnership's objective is to preserve and ensure the long-term affordability of a project that constitutes ± 30% of the metro's supply of federally subsidized units.[a]

Property Location, Access & Amenities

Located in the East University neighborhood of Reno, Nevada, the Property's offers residents' direct access to a wide array of parks, senior and low-income supportive services, public services, and other facilities and amenities.

The Property's convenient location ensures easy access to everything our residents may need. Just north of downtown Reno, it places residents within reach of the active city center while maintaining a neighborhood feel. The proximity to major transportation routes and public transit options is a significant advantage. With the freeway less than five minutes away and two bus lines (5 and 15), located just steps from the Property, residents can travel with ease and freedom. What truly sets the location of the Property apart is its seamless connection to essential amenities. Multiple grocery stores and food banks are conveniently located nearby, making it possible for residents to access fresh and affordable food options. Additionally, being within walking distance of Washoe County Senior Services is a tremendous asset. This will allow residents direct access to a range of specialized programs, support networks, and social activities specifically tailored to their needs.

[a] **Supply** Carville Park's 208 federally assisted units represent nearly 30% of the current supply of project-based units in the Reno-Sparks HUD Metro Area — 700 units in total.

Source: HUD Resource Map

Qualified Census Tract [a]	**Yes**
Low-Income Community [b]	**Yes**
Low Median Household Income Area [c]	**Yes**
High Need Senior Well-Being Area [d]	**Yes**

High Level of Social Vulnerability Area [e]	**Yes**
Limited English Proficiency Area [f]	**No**
Untapped Solar Potential Area [g]	**Yes**

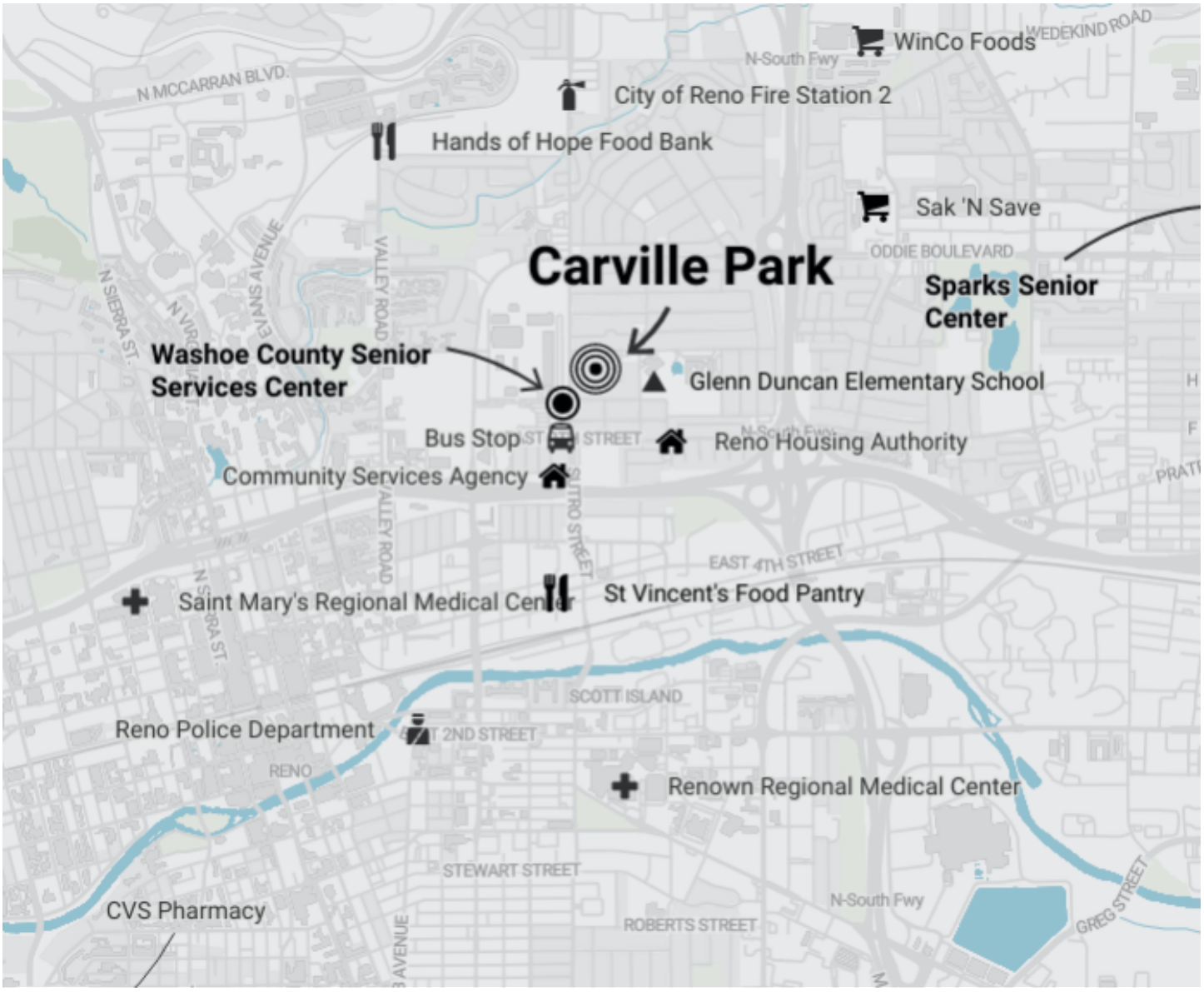

[a] **Qualified Census Tracts** are those in which 50% or more of the households are income eligible and the population of all census tracts that satisfy this criterion does not exceed 20% of the total population of the respective area.

[b] **Low-Income Communities** are census tracts in which the poverty rate is at least 20 percent, or the median family income does not exceed the greater of 80 percent statewide median family income or 80 percent of metropolitan area median family income.

[c] **Low Median Household Income Areas** are areas in which the median household income is much lower than that of the county as well as the state.

[d] **High Need Senior Well-Being Areas** are areas where a much larger percentage of the population is over the age of 65, including a larger population of seniors living alone and seniors with a disability than the surrounding areas.

[e] **High Level of Social Vulnerability Areas** are census tracts which has a high level of social vulnerability as determined according to the Social Vulnerability Index developed by the Centers for Disease Control and Prevention of the U.S. Department of Health and Human Services.

[f] **Limited English Proficiency Areas** are areas with a higher level of limited English proficient individuals (those 5 years or older who self-identify as speaking English less than "very well") as compared to the state.

Source: LEP.gov

[g] **Untapped Solar Potential Area** is an area that the state of Nevada has been identified as having low usage and high potential for solar.

Source: ESRI

Vision

As the Property sits today, the unit mix is entirely comprised of 4-bed/4-bath “quad” units with the residents of each “quad” sharing a central communal living area (kitchen, living room, patio, etc.). Due to the unique unit mix, the Property is leased to tenants on a “by-the-bed” basis with the existing section 8 HAP contract providing subsidies for up to 208 residents.

The Partnership envisions renovating the Property into a vibrant, environmentally sustainable and amenity rich community with the ability to continue its affordability in perpetuity. The Property will continue to serve low-income tenants with an emphasis on the elderly. Our primary goal is to improve the quality of life for our residents by providing them with the environment, amenities, and services they need to thrive.

To achieve this, we plan to convert the existing shared "quad" units into 208 private studios and 1-bedroom units, each with a full kitchen, bathroom, and living space. The individual studios and 1-bedroom units will offer residents more privacy, independence, and a comfortable living space.

Along with the reconfiguration of units, the redevelopment plan includes repairs and upgrades to the Property’s interior, exterior, and common areas, as well as the installation of new energy efficient appliances, fixtures, and finishes. We will also be improving the building's energy efficiency with the installation of new windows, HVAC systems and energy-efficient lighting. The Project envisions adding a range of new amenities and services, including on-site health services, recreational activities, and community events.

Overall, our goal is to create a community that offers residents a high quality of life and a safe, comfortable, and affordable home. This redevelopment project will help to achieve that goal, while also creating high-quality jobs and economic opportunities for the local community.

Social, Environmental & Economic Impact

Affordable housing is a crucial element in addressing the diverse needs of communities, and the redevelopment of Carville Park Apartments is poised to make a significant difference in the lives of many residents. The following section delves into the various social, environmental, and economic impacts of this transformative initiative, exploring how it preserves at-risk housing, improves health and wellness, increases access to resources, incorporates sustainable design, creates high-quality jobs, and ensures long-term affordability. Furthermore, we'll discuss the AFL-CIO HIT Matching Funds' role in bolstering the project's economic impact, demonstrating the far-reaching benefits of prioritizing affordable housing redevelopment.



Social Impact: Preserve At-risk Affordable Housing

There is a widespread shortage of affordable and available housing both nationally and locally, especially for the lowest-income renters. This Project would preserve and drastically improve existing affordable homes primarily occupied by low and extremely low-income seniors, a vulnerable population in need of safe, stable, and affordable housing. Preserving the affordability and improving the quality of the Property will have wide-spread benefits not just for the residents but also for the community.

It will offer a home and a community atmosphere to some of the area’s lowest-income residents, with direct access to public transportation, parks, government and nonprofit services, and other facilities. The Project will seamlessly blend into the neighborhood, minimizing disruption since the Property is already serving as affordable housing. Moreover, the Project will extend the existing in place restrictions, ensuring the Property remains affordable well into the future. By creating a stable and affordable property, the Project aims to provide low-income seniors with a long-term and secure home while benefiting the community by preserving much-needed affordable housing for a vulnerable population.

Social Impact: Improve Health and Wellness of Residents

A key objective of the Project is to improve the health and wellness of its residents by providing private and self-sufficient units, along with low or no-cost on-site supportive services. The updated unit floor plans will address health concerns related to communal living, especially highlighted by the COVID-19 pandemic. By providing private and self-sufficient homes, residents will have better control over their environment which can reduce the spread of illness. The Project also aims to offer on-site supportive services that cater to the needs of the residents addressing issues such as food insecurity, social isolation, access to basic healthcare, and educational support. The Project recognizes that providing supportive services to residents is essential for improving the overall health and well-being of the community. By offering on-site services, the Project will increase the utilization of these services, providing greater access to health, social, and educational resources. Ultimately, the Project's focus on improving the health and wellness of its residents will not only benefit the individuals living at the Property but will also contribute to a healthier and more sustainable community.

Social Impact: Increase Access to Affordable Housing and Resources

The Project aims to increase access to and awareness of affordable housing opportunities and available resources by implementing effective outreach and marketing strategies that target diverse and underserved eligible persons. The Project recognizes the importance of connecting with hard-to-reach populations and intends to employ a variety of methods to achieve this, including direct outreach, community partnerships, events, tours, brochures and marketing materials, and on-site assistance. To ensure equal housing opportunity, the Project will operate without any barriers to obtaining housing, regardless of an individual's race, color, religion, national origin, gender, familial status, disability, sexual orientation, gender identity, or gender expression. The Equal Housing Opportunity logo or slogan will be prominently displayed in advertising, marketing materials, and on project signs, and staff will be trained both on fair housing policy and on how to appropriately offer support and assistance to potential residents. The Project will also track applicant feedback to monitor the effectiveness of the program and will continually develop more effective outreach strategies based on the findings. These efforts will help ensure that the Project is effectively marketed to diverse and underserved communities, and that all eligible people are aware of the resources available to them.

Social Impact: Increase Population Served by the Property

Due to the current SRO unit mix, leasing is limited to single person households—capping the number of people the Property can serve at 208. However, by converting the SRO “quad” units into standalone studio and one-bedroom units, the Property will be able to lease to single as well as two person households — expanding the renter pool and potentially doubling the property’s capacity.

Social Impact: Commitment to Long Term Affordability

NNBCTC DevCorp has a long-standing history as an affordable housing provider within the community and is committed to ensuring the Project's long-term affordability. The Partnership plans to take the following measures to ensure affordability extends beyond the traditional 30-year period, including:

> NNBCTC DevCorp will retain ownership of the land via a 99-year ground lease. NNBCTC DevCorp will retain fee simple title to the land; with the new partnership acquiring fee simple title to the improvements and a leasehold interest in the land. The new Partnership’s leasehold interest will be in the form of a 99-year market subordinate ground lease. This will mitigate the risk of NNBCTC DevCorp losing long-term control of the Project and will help ensure its continued affordability.

> NNBCTC DevCorp will serve as the special member of Partnership. NNBCTC DevCorp will serve as the co-managing member of the new Partnership and will have the ability to exercise control and/or influence over major partnership decisions. This will help to ensure NNBCTC DevCorp’s long-term ownership of the Property and ability to ensure its continued affordability.

> NNBCTC DevCorp will have a purchase option and perpetual ROFR on any sale. NNBCTC DevCorp will have a Right of First Refusal (ROFR) to purchase the Partnership in the event of liquidation and one (or more) purchase options, granting the non-profit the right to acquire the interests of any remaining partners at a specified point in time(s). This purchase option will ensure that NNBCTC DevCorp has the ability to regain full control of the Property.

These strategic steps demonstrate the Partnership’s shared vision and the NNBCTC DevCorp’s commitment to another 50 years of service and provide the legal mechanisms to ensure the Property remains affordable for many years to come.

Environmental Impact: Sustainable Design, Construction & Operations

The Project aims to be a leading example of sustainable residential housing design, construction and operations. The Project's commitment to high-quality and sustainable building practices is evident in the design choices and selection of environmentally friendly materials and energy efficient and water saving fixtures and finishes. The Projects plans for 100% of the units to be ENERGY STAR certified multifamily units meeting the ENERGY STAR Multifamily New Construction National program requirements and Nevada state energy requirements. The Project is pursuing the integration of solar panels on roofs and newly constructed car ports, to further reduce the Property's environmental impact. The renovated units will consume at least 50 percent less energy for heating and cooling as compared to a non-energy-efficient unit, with the building envelope at least 10 percent more efficient than that of a similar non-efficient unit. These goals align with Nevada's Climate Strategy objectives, including reducing greenhouse gas emissions and increasing energy production from zero carbon dioxide emissions sources. The Project is committed to sustainable building practices and ensuring that its operations promote environmental sustainability while providing high-quality, affordable housing for its residents.

Environmental Impact: PV Solar Generation – Net Zero Consumption

The current construction scope includes the installation of a solar production and storage system on rooftops and car ports – the system has been sized to off-set nearly all the Project's forecast energy needs.

Solar System

Projected energy consumption, solar system generation and net energy consumption.

Energy Consumption / Production		**Annual**
Energy Generation: PV Solar		557,231 kWh
Energy Consumption		668,678 kWh
Energy Generation Surplus / (Gap)		**(111,447 kWh)**
Net Energy Offset		83.33%
Utility Expense Reduction	**$**	**65,297**

Equipment: Mission Solar MSE430SX9Z Panels (812x)

Source: The Canopy Companies, Internal Estimates • BigSun Solar Study

See Exhibit 1B for additional detail.

Economic Impact: Creation of High-Quality Jobs

The Partnership is dedicated to ensuring that all individuals working on the Project are fairly compensated, both during the construction phase and throughout operations. All construction will be performed under a to be negotiated project labor agreement to ensure that construction work is performed under equitable conditions. In addition to construction jobs, the Project will create permanent positions offering workers a living wage with full benefits and a pension. The Project also intends on participating in the northern Nevada apprenticeship program in order to help address the community needs of training the next generation of skilled workers with an emphasis on adding more women and minorities to the profession.

The Project plans for more than 50% of work within each construction trade performed by residents of Nevada, with more than 15% of the work within each construction trade performed by disadvantaged workers, and more than 15% of the work within each construction trade performed by apprentices (including at least 5% first-year apprentices).

The Project would create approximately 131 high-quality construction jobs (263,890 hours) as well as six permanent positions. By honoring prevailing wages, prioritizing union labor and embracing the use of apprentices, the Project will create sustainable and equitable high-quality jobs, improving the economic outcomes for hard working residents of Nevada.

Economic Impact ($'000s USD)

Construction phase's projected local, state and federal economic impact: estimates include direct, indirect and induced economic benefits.

Economic Impact	Direct	Indirect	Induced	Total
Output Generated	$27,077	$6,816	$16,202	**$50,096**
Gross Wages + Benefits Generated	$18,124	$2,464	$5,385	**$25,972**
Number of Jobs Generated	147	40	99	**286**
Hours of Work Generated	294,375	76,865	183,744	**554,984**
Average Hourly Wage + Benefits	**$61.6**	**$32.1**	**$29.3**	**$46.8**
State and Local Taxes Generated	$1,000	$279	$823	**$2,102**
Federal Taxes Generated	$3,520	$503	$1,163	**$5,186**
Total Taxes Generated	**$4,521**	**$781**	**$1,985**	**$7,287**

Source: AFL-CIO HIT, Internal Estimates

Economic Impact: +$65M of matching Funds from AFL-CIO HIT

The Partnership has secured a Letter of Interest from the AFL-CIO Housing Investment Trust to invest based on the investment provided by the Nevada State Infrastructure Bank, subject to the Trust's standard review and approval process. An infusion of outside capital into the community, such as the investment from the AFL-CIO Housing Investment Trust, will have far-reaching impacts beyond just this particular project – it will trigger further economic development, stimulate job creation, and draw in subsequent investments. Moreover, the funds enable the Nevada State Infrastructure Bank to successfully maximize its investment – achieving a 20-fold leverage in the case of Carville Park Apartments – which will enable the Bank to finance an increased number of affordable units.

Pension Matching Investment

Summary of the investment commitment(s) made by the AFL-CIO Housing Investment Trust (AFL-CIO HIT), the funding request from the Nevada State Infrastructure Bank (NIB) and the multiplier the Bank is expected to generate on it's investment.

Source of Funds	Investment
AFL-CIO HIT Investment: Construction financing through direct tax credit equity bridge loan	14,000,000
AFL-CIO HIT Investment: Construction financing through purchse of tax exempt private activity bonds	30,000,000
AFL-CIO HIT Investment: Construction and permanent financing through purchse of HUD 221(d)(4).	23,875,000
AFL-CIO HIT Investment: Total	**67,875,000**
NV State Infrastructure Bank Investment	7,000,000
NIB Investment Multiplier	**9.70x**

NIB Investment Multiplier = AFL-CIO HIT Total Investment / NIB Investment

Source: The Canopy Companies, Internal Financial Projections •

Construction Scope

Over the 21-month construction period, the redevelopment plan includes investing $24M (hard cost) to fully reconfigure, renovate, redesign, and modernize the units, and update and reimagine the common spaces and resident amenities. The construction scope prioritizes energy efficient upgrades and those aimed at extending the useful life of the Property while lessening its environmental impact.

Building Characteristics

Select building characteristics, including: building construction, construction materials, and building area.

Information	
Residential Buildings:	Ten (10) 2-story residential buildings
Community Buildings:	One (1) single story community center
Construction Type:	Garden, 1 & 2-story
Built:	1979
Rentable Building Area:	70,966 SF
Gross Building Area:	82,095 SF
Number of Units:	209
Roof:	Pitched, Asphault Shingle
Foundation:	Pier and Beam
Structure:	Wood Frame

Unit Interior: “Quad” Conversion

The proposed conversion of the ±1,500 SF "quad" floorplans aims to transform the existing layout into four individual units, maximizing space utilization and enhancing privacy for the occupants. Currently, the quad floorplan consists of four Single Room Occupancy (SRO) units surrounding a shared common kitchen and living area, which does not cater to the modern needs of occupants seeking more personal space and autonomy.

To achieve this conversion, each quad will be divided into one 495 SF one-bedroom, one-bathroom unit, and three separate studio apartments each with a private bathroom, ranging from 292 SF to 361 SF. This redesign will eliminate the shared common areas, giving each unit its own dedicated living, cooking, and bathing facilities. This change will not only provide added convenience for the residents but will also increase the overall appeal of the units to prospective renters.

In order to create these individual units, the existing floorplan will undergo strategic partitioning, bearing in mind optimal functionality and efficient use of space. The one-bedroom unit will be designed to accommodate a separate bedroom, a bathroom, a compact kitchen, and a living area, while the studio apartments will incorporate open-concept layouts that combine living and sleeping areas, a bathroom, and a small kitchenette.

Unit Interior: Finishes & Amenity Package

The unit interiors will be completely renovated and updated to create contemporary and stylish private 1-bedrooms and studios. Each unit will be equipped with its own kitchen, featuring a sink, fridge, stove, and microwave, along with new modern cabinets and countertops. We will also install new stylish flooring and modernize the existing bath areas, along with adding accessibility upgrades. Throughout the units, the old fixtures and finishes will be replaced with sophisticated and stylish water and energy saving upgrades and energy efficient LED lights to improve the Property’s efficiency and reduce energy consumption. Our goal is to create functional and efficient living spaces while improving the residents' health, wellness, and happiness. We will incorporate thoughtful and creative design to enhance the residents' independence, privacy, and comfort. Additionally, we will prioritize resident safety by adding fire suppression and alarm monitoring. The Property's updates aim to provide residents with an inviting and comfortable living space, while promoting energy conservation and sustainability.



The preliminary scope of work includes…

- New individual kitchens including ENERGYSTAR rated appliances, new cabinetry, solid surface countertops, upgraded hardware & water conscious fixtures.
- Modernize existing bath areas including new vanity, solid surface countertops, plumbing, hardware, and water efficient fixtures.
- Full replacement of existing lighting with energy efficient LED lighting.
- Full replacement of existing carpet flooring with resilient LVT.
- Full replacement of interior doors, baseboards, and trim.
- New plugs and switches throughout.

Buildings: Exterior Modernization & Upgrades

To better serve residents and create a modern and high-end atmosphere, the Property's exterior and amenities will undergo a complete transformation. All buildings will be repainted and updated with new siding and railings, while patios and balconies will be repainted and repaired. Large, energy-efficient windows and sliding doors will be installed, promoting sustainability while bringing additional light into the units.

The preliminary scope of work includes…

- Full repaint.
- New high efficiency windows and patio doors.
- New siding, facia, soffits, and trim (repair when possible).
- Modernize railings & patio surrounds.
- Substantial repairs to exterior stairs, treads, and landings.
- Updated signage and landscaping.

Buildings: Community Center & Amenities

The community center and leasing office will be updated and reconfigured to better suit residents' needs. Onsite amenities will include a newly designed lobby area, a modernized leasing office, a mail area, outdoor sitting areas, a fully equipped fitness center, bike racks, a business center, a library, a multi-purpose space, and a laundry room. These amenities are

designed to offer residents a range of options for relaxation, socialization, and physical activity, all within the comfort of their community.

The preliminary scope of work includes…

- Modernize common spaces and amenities, including lobby, leasing office, mail area, rec room, flex space, laundry room, library, business center, bike racks, outdoor areas and sitting areas

Buildings: Overhaul of Existing Systems

The Property was constructed in 1979 and many key building systems are almost 50-years old and are rapidly approaching the end of their effective useful life. The building systems will be revamped, and the components updated, repaired, or replaced as needed. The primary objective of all non-cosmetic upgrades will be to maximize the remaining useful life of the existing structures.

The preliminary scope of work includes…

- Full roof replacement.
- Full HVAC upgrade.
- Installation of ENERGYSTAR water heaters.
- Substantial replacement of existing domestic water and drain lines.
- Electrical panel replacement & rewire.
- Fire suppression and alarm system

Energy Generation: PV Solar & Storage System

As part of its commitment to sustainability, the Project plans to install roof mounted solar panels and/or solar panels on newly constructed carports at the Property. The system is forecast to generate 390,000 kWh annually, offsetting ± 100% of the Property's total energy consumption, reducing the Property's environmental impact.

The Property is ideally located in an Untapped Solar Potential Area that the state of Nevada has identified as having low usage and high potential for solar.

Uses ('000 USD)

Projected base case development uses of funds from acquisition through stabilization / loan conversion.

Use of Funds	Amount
Purchase Price	11,000
Transaction & Closing Costs	80
Construction Contract	18,400
GC Contingency: 5.0%	920
GC Profit & Overhead: 14%	2,705
P&P Bonds & Insurance: 1%	220
Owner Contingency: 10%	2,224
Soft Development Costs	3,338
Capitalized Carrying Charges	608
Capitalized Interest	5,033
Financing Costs & Fees	1,905
Syndication Costs	100
Net Working Capital	1,884
Developer Profit	6,980
Total	**55,398**

Development Team & Ownership Structure

The Project is a joint venture between the Northern Nevada Building & Construction Trades Council Development Corporation, a Nevada nonprofit with the mission of providing affordable housing to the residents of northern Nevada, and Canopy, an affordable housing development company with a focus on historic preservation and environmental sustainability, and significant experience utilizing and prioritizing union labor.

Developer / Managing Member: The Canopy Companies

At The Canopy Companies ("Canopy" or "Developer"), our mission is to weave together the threads of community, history, and affordability to create a vibrant tapestry of thriving communities. We are passionate about revitalizing communities by preserving their rich heritage and fostering strong, meaningful connections among our residents. Our commitment to affordable housing is unwavering, as we believe that everyone deserves a welcoming, nurturing place to call home.

With a focus on integrity, transparency, and collaboration, we aim to build trust with our investors and partners, ensuring that our projects yield benefits for all stakeholders involved. Through innovative thinking and a dedication to going the extra mile, we strive to deliver Projects that make a real impact on the community.

As an emerging commercial real estate firm, Canopy may be small, but we are mighty in spirit. Our close-knit team has consistently demonstrated resilience, creativity, and fearlessness in embracing the path less traveled—this has now become a cornerstone of the company's culture.

The principals bring over 25 years of combined experience investing, developing and operating in the multifamily space, overseeing the acquisition, renovation, stabilization, and sale of properties with a total capitalized value of more than $500 million across eight states. Through its projects, Canopy has generated hundreds of construction jobs and permanent positions.

Through a hands-on and proactive approach, the Canopy team possesses the expertise required to take complex projects from idea to fruition. The effective management of challenging and involved construction projects is one of the teams' greatest strengths. The company has a proven track record of architecting and delivering on projects that address the specific needs of all stakeholders through thoughtful corporate structuring, utilization of state and federal tax incentives and forging genuine relationships with our partners and residents.

Development Experience

The Canopy executive team's extensive experience makes them an ideal partner for the Project under consideration. Their expertise in temporary resident relocation (both on and off-site) demonstrates their commitment to minimizing disruption for tenants during the development process. Their knowledge of tenant and project-based rental assistance, including new voucher issuance and mark-up-to-market contracts, ensures that they can navigate complex financial structures effectively.

Furthermore, the team's experience in union labor relations, including the negotiation of Project Labor Agreements (PLAs) and Collective Bargaining Agreements (CBAs), highlights their ability to work cooperatively with labor organizations. They also understand potential pension withdrawal liability exposure, which is crucial for managing long-term financial risks.

The Canopy team's experience with state and federal tax credits, such as low-income housing and historic preservation tax credits, shows their proficiency in securing crucial funding for multifamily development projects. This expertise is invaluable for the Project under consideration, as it may require a combination of these tax credits to achieve its goals. Overall, the Canopy team brings the level of experience necessary to successfully develop a multifaceted and intricate project such as Carville Park Apartments.

Sponsor / Special Member: NNBCTC Development Corp.

The Northern Nevada Building & Construction Trades Council Development Corporation ("NNBCTC DevCorp") has been serving its mission of providing affordable housing to the low-income residents of northern Nevada since 1978. It has decades of experience owning, developing, operating, and managing affordable communities in the Reno area.

Ownership Structure

The Property will be 100% owned by 1244 Carville Drive LLC (the "Company"). The Northern Nevada Building & Construction Trades Council Development Corporation or its to be formed wholly owned subsidiary will hold a 0.01% Special member interest in the Company. A wholly owned affiliate of The Canopy Companies will hold a 0.09% Managing

Member Interest in the Partnership. A to be determined tax credit investor will hold a 99.90% Investor Member Interest in the Company.

Organizational Chart (Proposed)

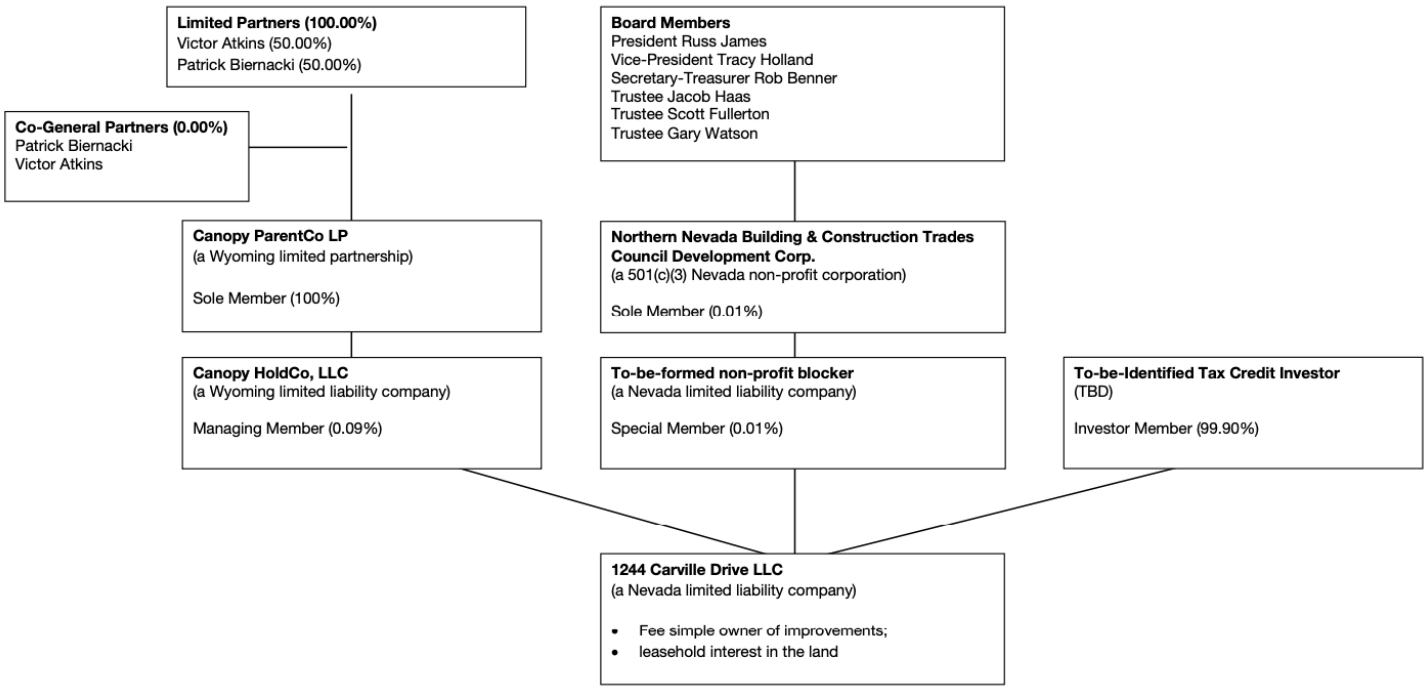

Funding Sources

The Partnership anticipates purchasing the Property for an estimated price of $10M and investing approximately $24M in construction costs to complete the renovation, reconfiguration, and transformation of the Property. The Project plans to finance the acquisition and rehabilitation of the Property as follows:

Sources ('000s USD)

Projected base case sources of funding at construction completion and stabilization/permanent loan conversion.

Source of Funds	Construction	Stabilization
Facility A: TE Bonds — AFL-CIO HIT	30,000	-
Facility B: Taxable — AFL-CIO HIT	12,759	-
HUD 221(d)(4) — AFL-CIO HIT	-	23,875
Soft 1: Deferred Developer Fee (DDF)	250	250
Soft 2: NV Infrastructure Bank LT Note	-	7,000
Equity: Investor Member	4,030	20,150
Equity: Managing Member	0	0
Equity: State Investor Member	2,760	2,760
Equity: Special Member	0	0
Cash flow from Operations	1,289	1,362
Total	**51,087**	**55,398**

Source: The Canopy Companies, Internal Financial Projections •

Construction Debt: Tax Exempt Private Activity Bonds

The Project will seek $30,000,000 in short term cash collateralized tax-exempt private activity bonds. The bond issuance will make the project eligible for 4% low-income housing tax credit under Internal Revenue Code Section 42(h)(4)(B).

Construction Debt: Equity Bridge Loan

The Project plans to bridge the $22.5M of tax credit equity through a short-term equity bridge loan. The bridge loan is currently sized at $12.8M.

Construction & Permanent Debt: HUD 221(d)(4)

The Project plans to secure permanent financing from HUD through the 221(d)(4) program authorized by the National Housing Act. Sized on a 1.15x amortizing DSCR, the loan is currently projected to generated $23.9M in proceeds.

HAP Contract Mark-Up-to-Market

The Property currently benefits from an existing Section 8 HAP contract that provides subsidies for up to 208 residents. The HAP contract is up for renewal in November 2023 and presents the opportunity to participate in HUD's Mark-Up-to-Market Program which allows for a rent increase up to comparable market-rate rent levels for all units covered under a project-based Section 8 contract. The additional revenue allows the Project to support additional permanent debt, reducing the need for alternative funding sources.

Soft Debt: Deferred Developer Fee (DDF)

A portion of the developer fee for the Project will be in the form of a deferred developer fee — currently $250,000 is expected to be deferred.

Soft Debt: NIB Affordable Housing Revolving Account

The Project is requesting soft funding from the Nevada State Instructure Bank's Affordable Housing Revolving Account in the amount of $7.0M.

Tax Credit Equity: Federal Low Income Housing Tax Credit

The Project is projected to generate $24M of Federal Section 42 Low-Income Housing Tax Credits — the proceeds from the admission of a tax credit investor are forecast to total $20.4M ($0.85 PPC).

Tax Credit Equity: Federal Energy Investment Tax Credit (ITC)

The Project intends to seek an award of Energy Investment Tax Credit under the Federal Tax Credit for Solar Photovoltaics based on the installation of the new solar energy storage system. The Project anticipates securing approximately $1.8M in Investment Tax Credits, generating proceeds of approximately $1.6M ($0.90 PPC).

Tax Credit Equity: Energy Efficient New Homes Tax Credit (45L)

The Project intends to seek an award of the Section 45L Tax Credit for Energy Efficient New Homes. This tax credit has recently been updated and extended and, for units acquired on or after January 1, 2023, provides a $500 credit (increased to $2,500 if prevailing wage requirements are met) available for ENERGY STAR certified multifamily units meeting the ENERGY STAR Multifamily New Construction National program requirements (or the regional program requirements) applicable to the dwelling unit, as specified in Section 13304. The Project anticipates securing approximately $522K in Section 45L tax credits, generating proceeds of approximately $470K ($0.90 PPC).

Tax Credit Sale: Nevada State Low Income Housing Tax Credits

The Project intends to secure an award for and to sell to a third party its allocation of Nevada State Low-Income Housing Tax Credits, the proceeds of which are expected to be available on or shortly after closing. The Project anticipates securing $3.0M in Nevada State Low-Income Housing Tax Credits. The proceeds from the sale of the credits are expected to generate $0.92 cents per credit.

Other: Construction Period Operating Cash Flow

The current projections assume a portion of construction period operating cash flow as a source of funds — currently $1.4M.

Timeline

The total construction timeline is anticipated to be approximately 21-months. Due to the Property's physical plant, construction is expected to be completed in phases, completing buildings on a building-by-building basis. The phased schedule is advantageous in two respects: (i) it will improve tax credit pricing by accelerating the Project's credit delivery schedule and (ii) it will minimize the economic and social impact of relocating the Property's existing residents.

See Exhibits 5A and 5B for detailed pre-development and construction timelines.

EXHIBIT 1A

NOVOGRADAC RENT COMP STUDY

NOVOGRADAC™

A RENT COMPARABILITY STUDY OF:

Carville Park Apartments

A RENT COMPARABILITY STUDY OF:

CARVILLE PARK APARTMENTS

1244 Carville Dr
Reno, Washoe County, NV 89512

Effective Date: February 10, 2023
Report Date: March 6, 2023

Prepared for:
Victor Atkins
Canopy Acquisitions, LLC
4314 Avenue G
Austin, TX 78751

Assignment Code: 10318413

Prepared by:
Novogradac
1100 Superior Ave. E Suite 900
Cleveland, Ohio 44114
216-239-5529



NOVOGRADAC
Consulting®

March 6, 2023

Victor Atkins
Canopy Acquisitions, LLC
4314 Avenue G
Austin, TX 78751

Re: Rent Comparability Study of Carville Park Apartments (Subject)
1244 Carville Dr in Reno
Washoe County, NV 89512
HAP Contract No.: NV39H022001
FHA No.: N/A

Dear Victor Atkins:

At your request, Novogradac & Company LLP doing business under the brand name Novogradac Consulting (Novogradac), has performed a Rent Comparability Study (RCS) for the Subject property. The RCS was prepared in accordance with the Uniform Standards of Professional Appraisal Practice (USPAP) and the supplemental standards of HUD's Section 8 Renewal Policy and Chapter 9. Market rents were defined and estimated in accordance with Sections 9-8 through 9-13 of Chapter 9 and Appendix 9-1-2 of the Section 8 Renewal Policy and the report was prepared in accordance with Sections 9-8 through 9-14 of this chapter, as required by Appendix 9-10. We understand that HUD/the Section 8 Contract Administrator (CA) and the project owner will use the estimate of market rents to determine: 1) the owner's options for renewing the project's Section 8 contracts; and 2) the maximum rents allowed under any renewal contract. Without limiting the general applicability of this paragraph, under no circumstances may the Report be used in advertisements, solicitations and/or any form of securities offering.

This letter serves as a transmittal letter for the Rent Comparability Study for the above-referenced property. It is our understanding that the property consists of a 209-unit Section 8 apartment complex with one non-revenue unit where tenants pay 30 percent of their income towards rent. The Subject is currently improved as 52 quads where four single-room occupancy (SRO) with private bathrooms share a common area and kitchen. Of the Subject's 209 overall units, 208 are revenue-generating and encumbered/benefited by a Housing Assistance Payment #NV39H022001 (HAP) contract, which dictates the rent levels (contract rents) for the property. The remaining unit is a non-revenue employee unit.

Neither the appraiser nor the appraisal group have completed any prior engagements on the property that is the Subject of this report within the three-year period immediately preceding the acceptance of this assignment.

The purpose of the study is to estimate the market rent for units that are assisted under the renewed Section 8 contract. Market rent is the rent that a knowledgeable tenant would most probably pay for the Section 8 units as of the date of this report, if the tenants were not receiving rental subsidies and rents were not restricted by HUD or other government agencies. The following table depicts the unit types and the estimated market rate rent conclusions.

Unit Mix				Estimated Market Rent (As-Is)			Estimated Market Rent (As-Renovated)		
Unit Type	# Section 8 Units	# Non-Section 8 Units	Size (SF)	Achievable Rent	$/SF	Separate Grid?	Achievable Rent	$/SF	Separate Grid?
0BR/1BA - Garden	208	0	169	$700	$4.14	Y	$1,150	$3.14	Y
Total	**208**	**0**							

Per the Client's request, we have provided an analysis and estimate of market rents based upon the as is and as renovated hypothetical condition that the proposed renovations are completed as of the effective date of this report. According to information provided by the developer, the total renovation hard costs are estimated to be $24,733,838, or approximately $118,344 per unit. Renovations will consist of the conversion of SRO units into studio units, consisting of a private kitchen and common space. Based on information provided by the developer, renovations will occur with limited tenant displacement. Therefore, our estimate of 'as renovated' rents is based upon the hypothetical condition that renovations are complete and all improvements indicated above are final. The scope of renovations includes, but are not limited to the following:

SCOPE OF RENOVATIONS

Exterior	
New windows	Siding/stucco replacement
Addition of video surveillance	Addition of perimeter fencing
Interior	
New doors, baseboard and trim	New hot water heaters
New paint	New Flooring
New electrical	New kitchen appliances
Addition of perimeter fencing and video surveillance	
Addition of bathroom and kitchen plumbing	
Common Area	
Update to stairwells	Service coordination
Addition of exercise facility	

The Subject property and the comparables were inspected on February 10, 2023, which will serve as the effective date of this report.

Additionally, pursuant to Section 9-14 of the Chapter Nine guidance, the Project's median rent as is and as renovated are below the threshold, as shown in the following table.

Mandatory Market Threshold Test
Carville Park Apartments
Washoe County
Zip Code 89512

Unit Type	Total Section 8 Units	RCS Rent (As Is)	RCS Rent (As Renovated)	Cumulative Section 8 Units
0BR/1BA - Garden - 169 sf	208	$700	$1,150	208
Total # Of Units	**208**			
Median Unit				**104.5**
Median RCS Rent		**$745**	**$1,203**	
HUD Threshold: 140% of Median Rent in 89512*				**$1,205**
Test: Project's Median Rent Above HUD 140% Threshold?		**No**	**No**	

*Source: HUDUser.org, March 2022

Please do not hesitate to contact us if there are any questions regarding the report or if Novogradac can be of further assistance. It has been our pleasure to assist you with this project.

Respectfully submitted,
Novogradac

David Boisture, ASA, CRE
LEED Green Associate
Partner
David.Boisture@Novoco.com

Brad Weinberg, MAI, CVA, CRE, CSPO
Partner
Brad.Weinberg@novoco.com
Certified General Real Estate Appraiser
NV License No. #A0207819-CG

K. David Adamescu
Manager
David.Adamescu@Novoco.com

Jenna Jordan
Analyst
Jenna.Jordan@novoco.com

TABLE OF CONTENTS

INTRODUCTION **5**
Assignment Approach 6
Definition of Market Rent 6
Property Identification 6
Purpose and Function of Report 6
SCOPE OF WORK **7**
Scope Of Work 8
DESCRIPTION OF SUBJECT PROPERTY **9**
Description of Subject Property 10
SUBJECT AND NEIGHBORHOOD PHOTOS **14**
Photographs of Subject Property and Neighborhood 15
DEFINITION OF SUBJECT MARKET AREA **23**
Identification of Subject Market Area 24
DESCRIPTION OF NEIGHBORHOOD **26**
NARRATIVE DESCRIBING SELECTION OF COMPARABLES **33**
Narrative Describing Selection of Comparables 34
LOCATOR MAP FOR SUBJECT AND COMPARABLES **36**
RENT COMPARABILITY GRID FOR EACH PRIMARY UNIT TYPE **38**
NARRATIVE EXPLAINING ADJUSTMENTS AND MARKET RENT CONCLUSIONS **41**
Narrative Explaining Adjustments And Market Rent Conclusions 42

ADDENDA

INTRODUCTION

ASSIGNMENT APPROACH

The assignment is to render an estimate of the “As Is” and the “As Renovated” market rent for the Subject, based on the hypothetical condition that the proposed renovations are complete as of the effective date of this report. In determination of the estimates, the appraiser will employ a market rent comparison. We surveyed the local market for similar properties leasing units at market rents. We then adjusted the market rents at these properties for any differences that existed. After carefully analyzing the results of the survey and adjustment process, we then reconcile to a final market rent estimate.

DEFINITION OF MARKET RENT

HUD defines market rent as the rent that a knowledgeable tenant would most probably pay for the Section 8 units as of the date of the appraiser’s report if the tenants were not receiving rental subsidies and rents were not restricted by HUD or other government agencies. The Dictionary of Real Estate Appraisal defines market rent as, "The most probable rent that a property should bring in a competitive and open market under all conditions requisite to a fair lease transaction, the lessee and lessor each acting prudently and knowledgeably, and assuming the rent is not affected by undue stimulus. Implicit in this definition is the execution of a lease as of a specified date under conditions whereby:

- Lessee and lessor are typically motivated;
- Both parties are well informed or well advised, and acting in what they consider their best interests;
- Payment is made in terms of cash or in terms of financial arrangements comparable thereto; and
- The rent reflects specified terms and conditions typically found in that market, such as permitted uses, use restrictions, expense obligations, duration, concessions, rental adjustments and revaluations, renewal and purchase options, frequency of payments (annual, monthly, etc.), and tenant improvements (TIs).

(Source: The Dictionary of Real Estate Appraisal, Appraisal Institute, Seventh Edition, 2022).

PROPERTY IDENTIFICATION

The Subject is an existing 209-unit Section 8 property located at 1244 Carville Drive, Reno, Nevada 89512. The property offers 208 revenue-generating single occupancy rooms (SRO) with common area furnishings and a shared kitchen among four units. All 208 units are subject to Section 8 restrictions where tenants pay 30 percent of their income toward rent. The SRO units have been identified as primary unit types pursuant to HUD Rent Comparability Study Guidelines, Section 9-9A. The Subject is identified as Section 8 Project Number: NV39H022001.

PURPOSE AND FUNCTION OF REPORT

Canopy Acquisitions, LLC is the client in this engagement. The intended users include their assigns, and HUD; the intended use is for submission to United States Department of Housing and Urban Development (HUD) in accordance with HUD’s Section 8 Renewal Policy and Chapter 9. This notice requires owners of Section 8 projects to submit estimates of market rental rates for each type of unit by comparison with comparable market-rate units in the market area.

The purpose of this report is to estimate "As Is" and "As Renovated" market rental rates for each type of unit in the Subject property by comparing unassisted units in the same market area that are similar to the property as to neighborhood (including risk of crime), type of location, access, street appeal, utilities, and other relevant characteristics. Adjustments are made to account for differences between the Subject and the comparable properties.

SCOPE OF WORK

SCOPE OF WORK

The appraiser has been asked to estimate the market rent for the units located at Carville Park Apartments (Subject). For the purposes of this assignment, the appraiser or assistant physically inspected the Subject and comparable data. Individuals from a variety of comparable properties as well as the Subject's management were consulted (in person or by phone). Various publications and sources were consulted and considered in the course of completing this assignment, including but not limited to, realtors, apartments.com, and leasing agents at various apartment complexes.

The scope of this assignment is limited to the gathering, verification, analysis and reporting of the available pertinent market data. All opinions are unbiased and objective with regard to market rent. The appraiser has made a reasonable effort to collect, screen and process the best available information relevant to the assignment and has not knowingly and/or intentionally withheld pertinent data from comparative analysis. Due to data source limitations and legal constraints (disclosure laws), however, the appraiser does not certify that all data has been taken into consideration.

Brad Weinberg, a certified general real estate appraiser with Novogradac, oversaw and supervised all data collection and analysis. K. David Adamescu and Jenna Jordan provided professional assistance to the appraiser. K. David Adamescu inspected the Subject and comparable properties. David Boisture also reviewed the final report. The following actions were taken to complete this RCS.

- On February 10, 2023 , K. David Adamescu inspected the Subject's interior and exterior to determine the property's physical and functional characteristics. The property manager provided additional information prior to and during the site inspection. Unit sizes were provided by management and confirmed visually during our site inspection. As indicated in Chapter 9 Section 9B1, we have inspected at least one unit for each primary unit type. The following table indicates the units inspected.

UNITS INSPECTED

Unit #	Bedroom	Status	Condition
53	SRO	Vacant	Average
73	SRO	Vacant	Average

- Jenna Jordan researched comparable apartment rental activity in the Subject's apartment market. The research included pulling data from Internet sites, local newspapers and publications, interviewing leasing agents or brokers, owners, and managers of local apartment properties via telephone and in person.
- On February 10, 2023 K. David Adamescu inspected the exteriors of each comparable property.
- In February 2023, Jenna Jordan and K. David Adamescu interviewed in person or via a phone conversation various managers of the comparable properties to confirm all data and to collect additional information about each comparable property including size, age, amenities, occupancy rates, and other general market information.
- K. David Adamescu and Jenna Jordan completed the data and adjustment columns of the Rent Comparability Grids using the instructions in HUD's Section 8 Renewal Policy and Chapter 9.
- Brad Weinberg oversaw the data collection, determined final rent conclusions, and reviewed the completed work.

Our findings are summarized within this report, which includes the applicable HUD form 92273-S8. The results of our analysis are reported in a manner consistent with USPAP Standard 2.2(a). This is considered an appraisal report. The reporting form is specific to the client and is intended to adhere to USPAP Appraisal Report guidelines, HUD's Section 8 Renewal Policy, Chapter 9, and our client needs.

DESCRIPTION OF SUBJECT PROPERTY

DESCRIPTION OF SUBJECT PROPERTY

The following description of the existing improvements was taken from our physical inspection of the property and information provided to us by the client. The information for the Subject property was provided by Victor Atkins (805-364-2179) and confirmed during the property inspection.

Carville Park Apartments (Subject) is an existing 209-unit affordable family development located on a 4.39-acre parcel at 1244 Carville Dr, Reno, Nevada 89512. The property was originally constructed in 1979. The property is now proposed to undergo renovations financed with Low-Income Housing Tax Credits (LIHTC). The Subject consists of garden-style structures offering a total of 209 SRO and two-bedroom apartments. All of the Subject's affordable units benefit from project-based Section 8 subsidy where tenants pay 30 percent of their income towards rent. Currently, the Subject is currently improved as 52 quads where four single-room occupancy (SRO) with private bathrooms that share a common area and kitchen. Notable amenities include balconies/patios, complimentary internet, ceiling fans, central air conditioning, central laundry, a clubhouse, unit furnishing, on-site management, video surveillance, a security patrol, and surface parking. Renovations will consist of the conversion of SRO units into studio units, consisting of a private kitchen and common space. Following completion of the planned renovations, the Subject's amenity package will expand to include a fitness center, hand rails, limited access, perimeter fencing, service coordination, and conversion of all quad units to studio units to include individual kitchens and common areas. Service coordination services will include programs addressing basic health care, food insecurity, educational and financial literacy, and social isolation. Total hard costs are estimated to be $24,733,838, or $118,344 per unit. Renovations are anticipated to begin October 2023 and be complete in January 2026.

The following table outlines the Subject's unit mix and unit sizes. The unit sizes were provided by the client and confirmed with the architectural plans for the Subject property. The square footage does not include balconies or mechanical spaces.

UNIT MIX AND SQUARE FOOTAGE – AS IS

Unit Type	Number of Units	Unit Size As-Is (SF)	Net Leasable Area
SRO	208	169	35,152
2BR/1BA	1	1,000	1,000
Total	**209**		**36,152**

UNIT MIX AND SQUARE FOOTAGE – AS RENOVATED

Unit Type	Number of Units	Unit Size As-Is (SF)	Net Leasable Area
0BR	208	366	76,128
2BR/1BA	1	1,000	1,000
Total	**209**		**70,264**

Subject Features and Improvements

The following description will discuss the amenity packages of the Subject, the physical features of the site, as well as layout, access issues, and traffic flow.

Unit Amenities: The Subject's unit amenities consist of balconies/patios, blinds, complimentary internet, carpeting, ceiling fans, central air conditioning, unit furnishing, and surface parking. Following completion of the planned renovations, the Subject's unit amenities will expand to include hand rails, private common area space, and private kitchenettes.

Property Amenities: The Subject's community amenities consist of central laundry, a clubhouse, on-site management, video surveillance and a security patrol. Following completion of the planned renovations, the Subject's common amenities will expand to include a fitness center, limited access, perimeter fencing, service coordination.

Post-Renovation Amenities: Following completion of the proposed renovations, the Subject's amenity package will expand to include increased in-unit and property amenities.

Parking: The property offers off-street parking. The Subject offers approximately 100 off-street parking spaces, surface parking spaces, or 0.48 spaces per unit. We expect the number of parking spaces to continue to be adequate following renovations.

Property Condition and Layout: The Subject's exterior, interior, and common areas are in average condition overall and the floor plans are generally functional. Following renovations, the units will be in good overall condition.

Topography: The Subject site exhibits level topography.

Shape: The Subject site is irregular in shape.

Size: The Subject site is 4.39 acres or 191,228 square feet.

Density: The Subject is developed to a density of 47.38 units per acre.

Existing Improvements: The Subject consists of 11 two-story walk-up garden style residential buildings and one, one-story community building. The structure is steel frame construction on concrete slab foundation with a flat roof. The Subject currently exhibits average overall condition.

An aerial view of the Subject site is shown following.

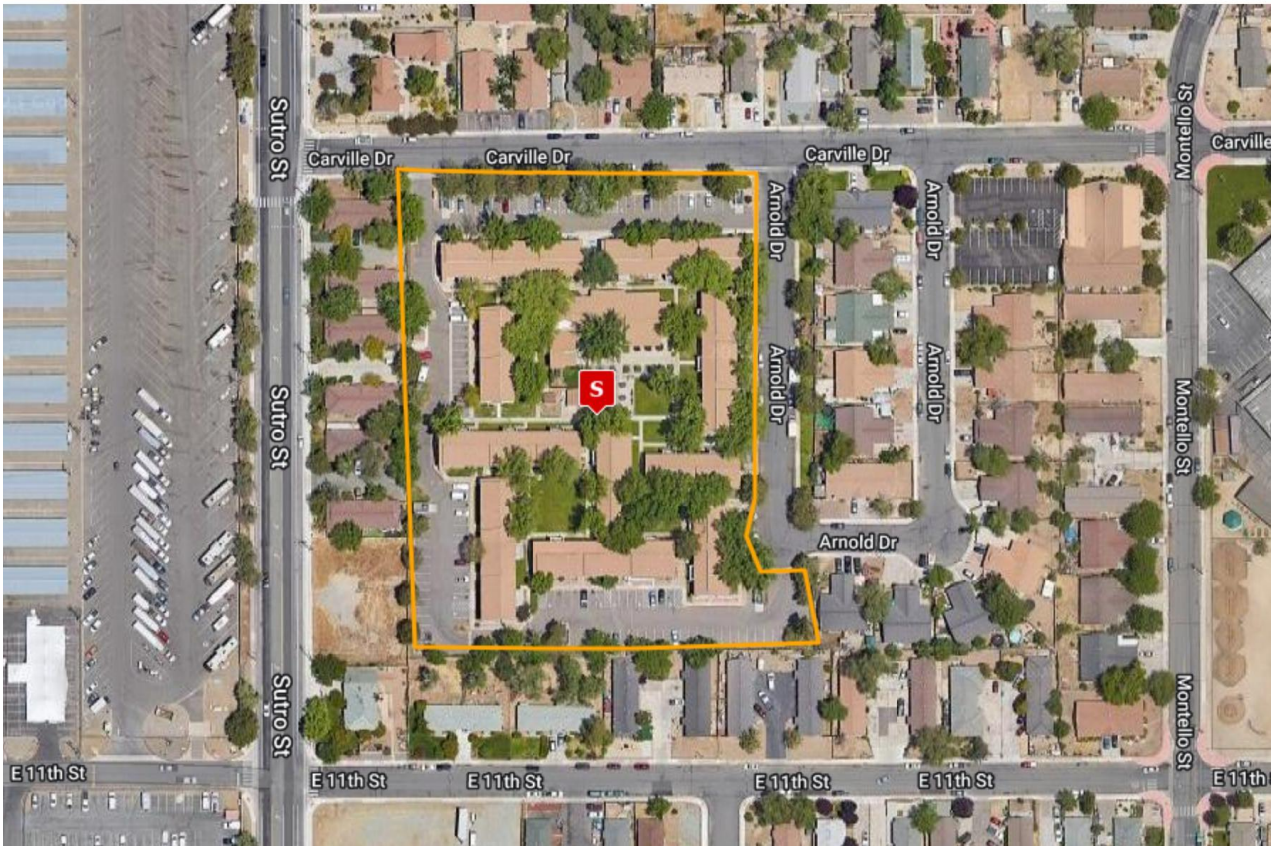

Source: Google Earth, February 2023

Access and Traffic Flow: The Subject is accessed via Carville Drive, which traverses east/west. Carville Drive provides access to Sutro Street that provides access to N Wells Avenue and Interstate 80. Interstate 80 provides direct east/west access to downtown Reno, and connects with Interstate 580, that traverses north/south. Overall, access is considered good.

Utility Structure

The following table details utility allowance calculations as derived from the most recent utility allowance schedule published by the Reno Housing Authority, effective as of October 1, 2022.

HOUSING AUTHORITY UTILITY ALLOWANCE

Utility and Source	Paid By	0BR
Heating - electric	Landlord	$0
Cooking - electric	Landlord	$0
Electric	Tenant	$59
Air Conditioning - central	Tenant	$0
Hot Water - electric	Landlord	$0
Cold Water	Landlord	$93
Sewer	Landlord	$0
Trash	Landlord	$0
TOTAL - Paid by Landlord		**$93**
TOTAL - Paid by Tenant		**$59**

Source: Reno Housing Authority, October 2022

The Subject offers central air conditioning and electric cooking, heating, and water heating. Tenants are responsible for the electric expense. According to the Reno Housing Authority, utility allowance amounts are issued based on the assumption that landlords pay for water, sewer, and trash expenses. The expense for water, sewer, and trash is issued in one lump sum, as shown above. Because tenants at the Subject are responsible for electricity costs, we utilized the housing authority allowance for tenant-paid electricity.

Scope of Rehabilitation

The Subject is proposed for renovations with LIHTC equity. The developer provided a scope of work for the renovations, which are estimated at $24,733,838 in total hard costs, or $118,344 per unit. The renovation would convert all SRO units into studio units with private common areas and kitchens. The renovation scope includes, but may not be limited to the following:

SCOPE OF RENOVATIONS

Exterior	
New windows	Siding/stucco replacement
Addition of video surveillance	Addition of perimeter fencing
Interior	
New doors, baseboard and trim	New hot water heaters
New paint	New Flooring
New electrical	New kitchen appliances
Addition of perimeter fencing and video surveillance	
Addition of bathroom and kitchen plumbing	
Common Area	
Update to stairwells	Service coordination
Addition of exercise facility	

Per the Client's request, we have provided an additional analysis and estimate of current rents based upon the hypothetical condition that the previously noted renovations are complete as of the effective date of this report.

Net Rent Conclusions

Below are our achievable market rent conclusions for the Subject's Section 8 units "As Is" and "As Renovated."

NET RENT CONCLUSIONS

Unit Type	# Units (Total)	# Units (Section 8)	# Units (Other Restriction)	# Units (Non-Revenue)	Current Contract Rents	Market Rents - As Is	Market Rents - As Renovated
0BR/1BA - Garden	208	208	0	0	$641	$700	$1,150
2BR/1BA – Garden	1	0	0	1	-	-	-
Total	**209**	**208**	**0**	**1**			

SUBJECT AND NEIGHBORHOOD PHOTOS

PHOTOGRAPHS OF SUBJECT PROPERTY AND NEIGHBORHOOD



Exterior view



Management office



Exterior view



Exterior view



Mail center



Picnic area



Exterior view


Exterior view


Exterior view


Typical parking



Central laundry


Central laundry

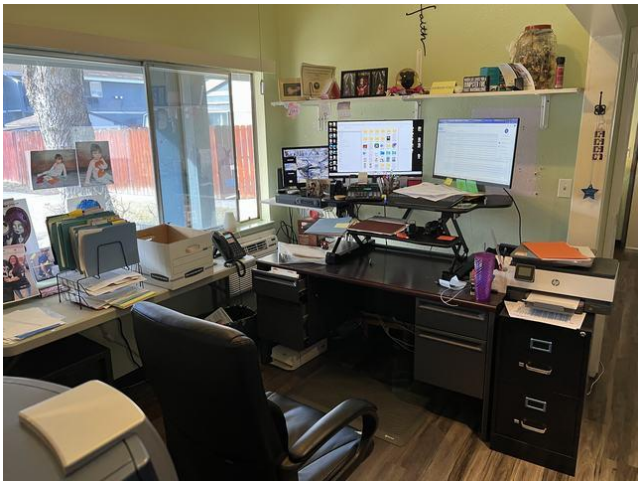

Leasing office



Community room



Community room

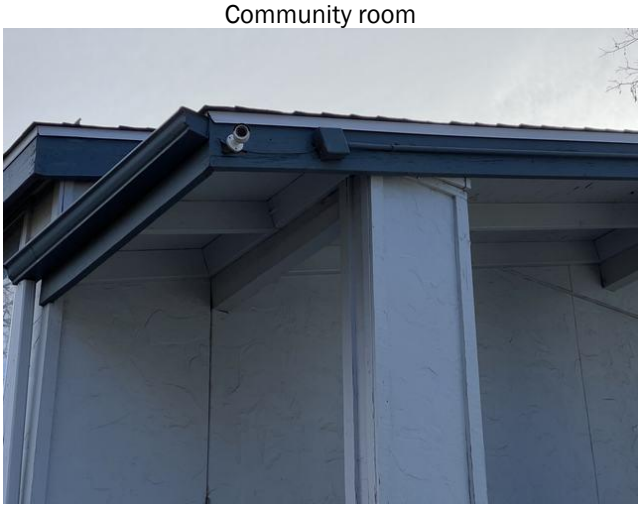

Video surveillance

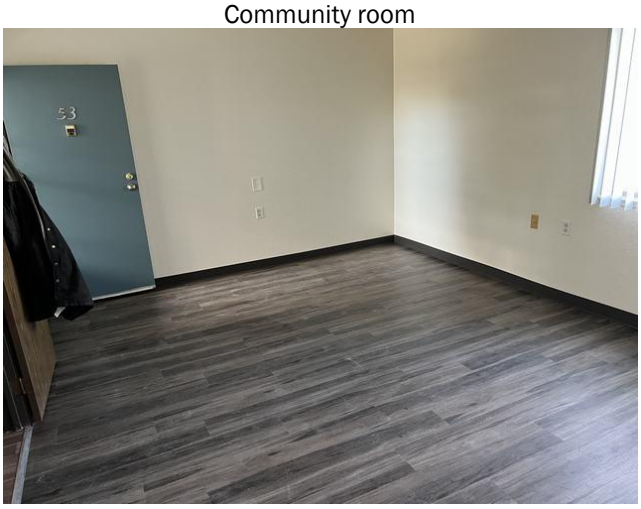

Typical SRO bedroom

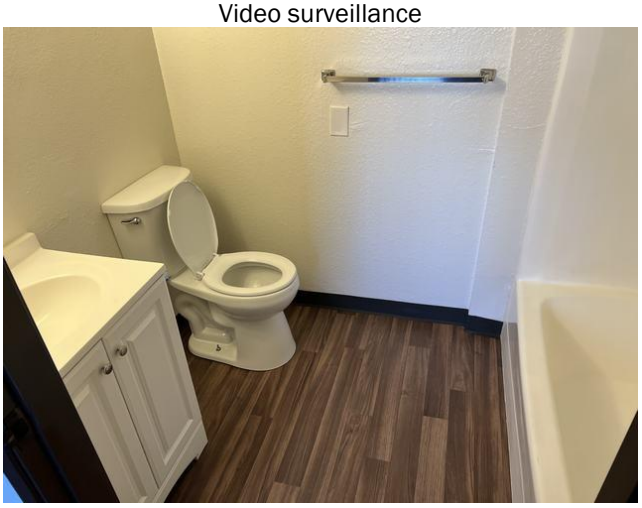

Typical SRO bathroom



Typical SRO closet



Typical bedroom



Typical common area kitchen



Typical common area kitchen



Typical common area refrigerators



Typical common kitchen/eating area

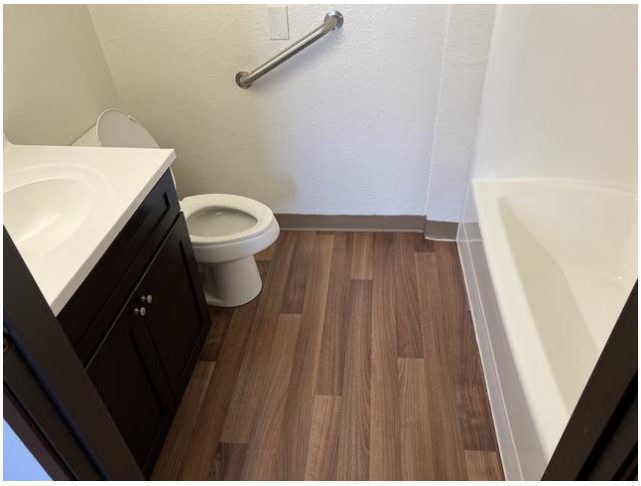

Typical SRO bathroom



Typical common living area

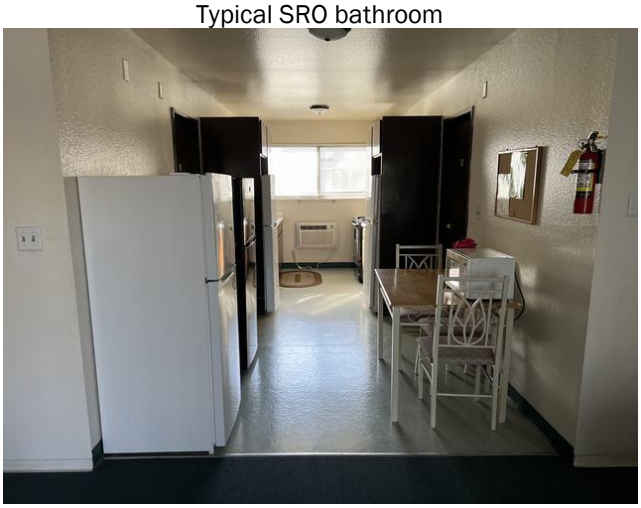

Typical common kitchen/dining area



Typical patio



View west along Carville Drive



View east along Carville Drive



View north along Arnold Drive



View south along Arnold Drive



View north toward multifamily (public housing)

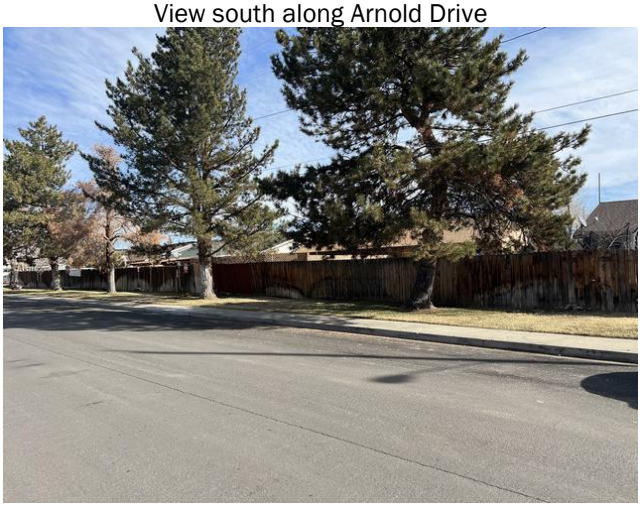

View east toward single-family



View south toward duplexes



View west toward duplexes



Willie J. Wynn Apartments to north


Typical single-family to north


Typical single-family to north


House of worship to east


Elementary school to east


Community library to east



Middle school to east



Typical duplex to east



Typical duplex to south



Typical single-family to south



Typical duplex to west



Reno Rodeo Stadium to west

DEFINITION OF SUBJECT MARKET AREA

IDENTIFICATION OF SUBJECT MARKET AREA

We determined the Primary Market Area (PMA) based on our conversations with local market participants including property managers, as well as our physical inspection of the market. The PMA is generally defined as the communities of Reno and Sparks. The PMA boundaries are: State Route 659 to the north; Sparks Boulevard and State Route 659 to the west; S McCarran Boulevard to the south; and N McCarran Boulevard to the west. The PMA encompasses approximately 36 square miles. We believe that additional support will originate from areas outside of the established PMA. We estimate a leakage of 10 percent. To provide a broader economic context for the Subject, we also include a Secondary Market Area (SMA). The secondary market area (SMA) for the Subject is Reno, NV Metropolitan Statistical Area (MSA), which consists of the following counties: Storey and Washoe in Nevada. The MSA is 13,123 square miles.

Primary Market Area Map

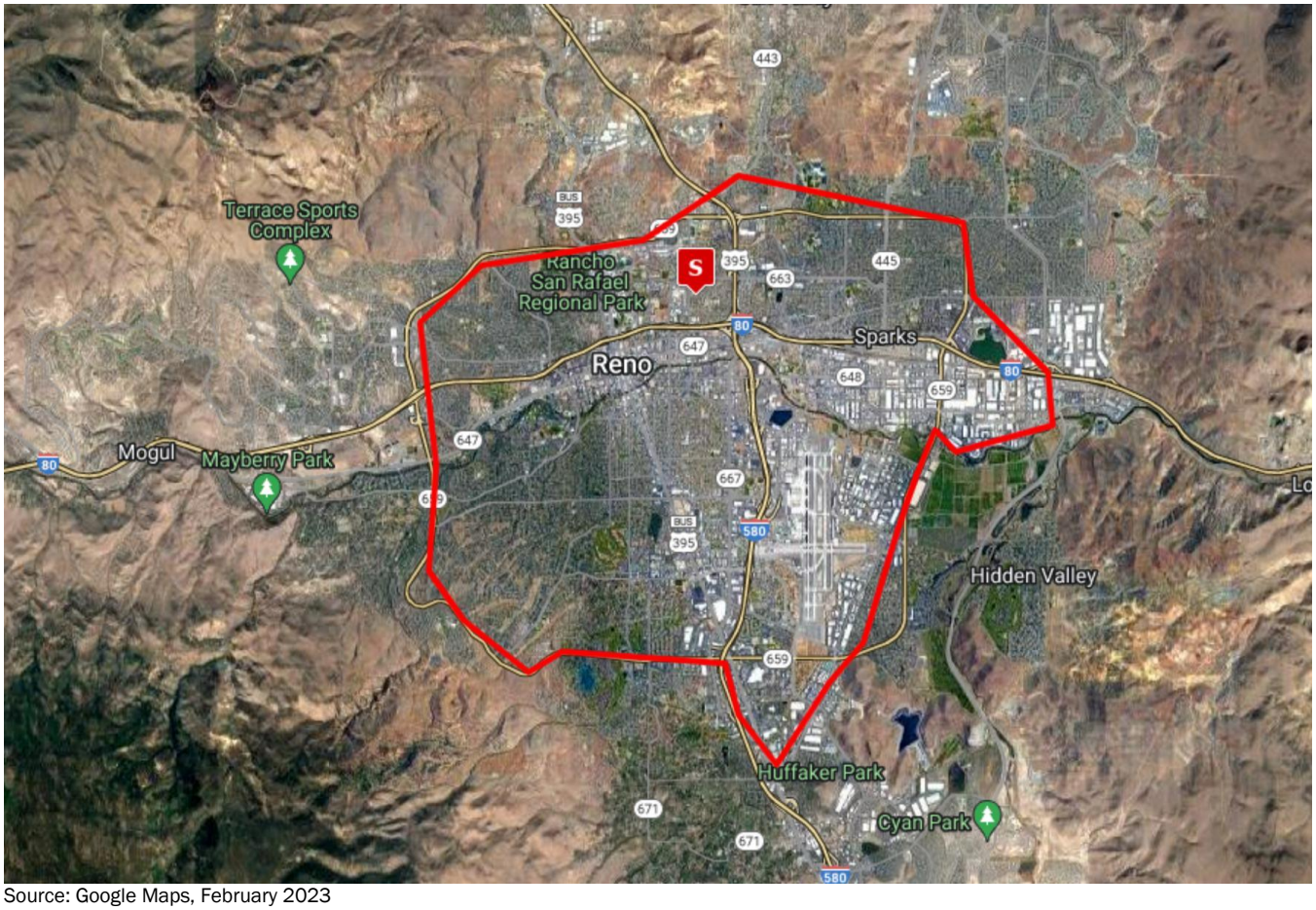

Source: Google Maps, February 2023

Secondary Market Area Map

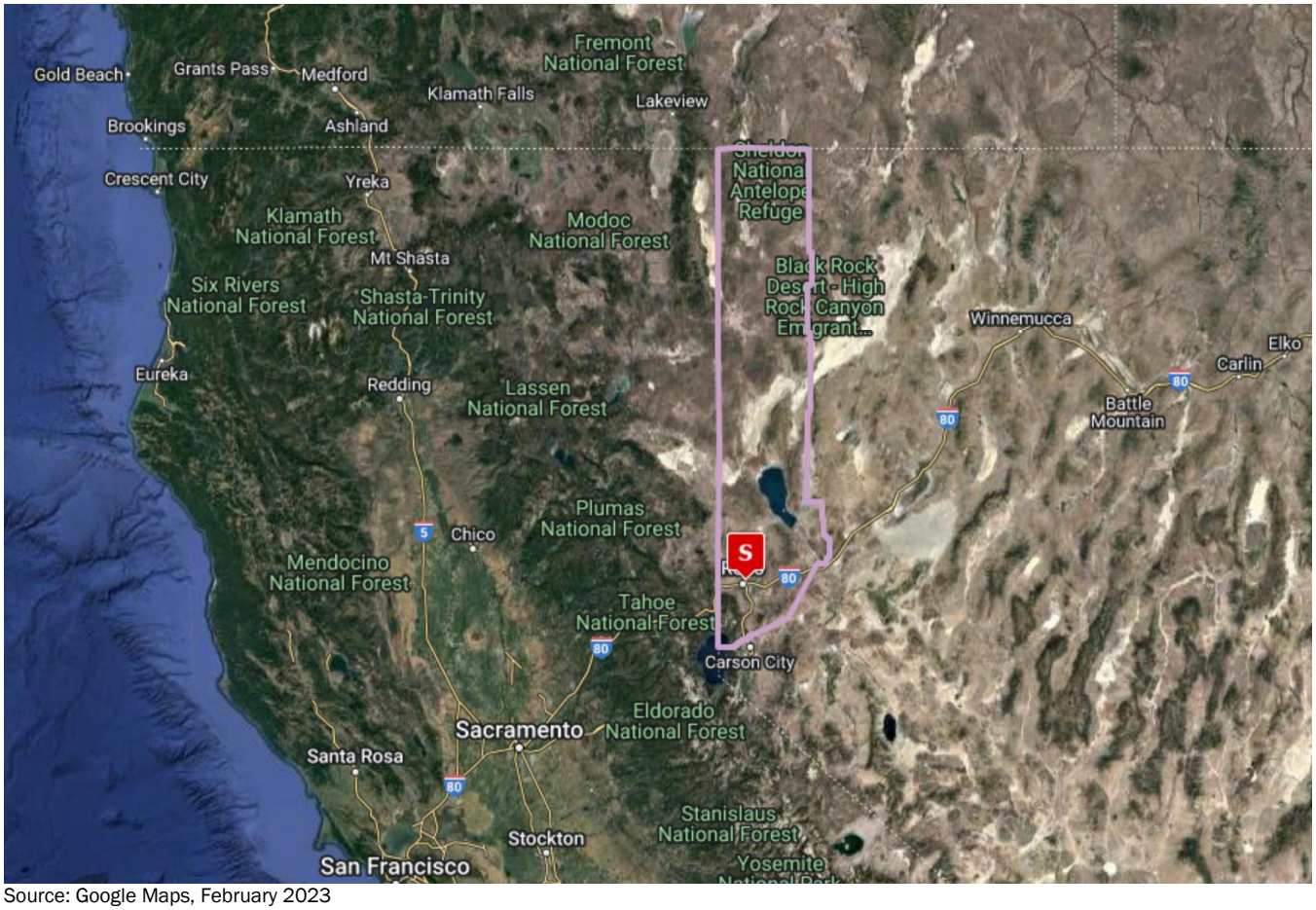

Source: Google Maps, February 2023

DESCRIPTION OF NEIGHBORHOOD

Population and Household Trends

The table below illustrates population and household trends in the PMA, (which is inclusive of the Subject's neighborhood), SMA, and nation from 2000 through 2027.

POPULATION

Year	PMA		MSA		USA	
	Amount	*Annual Change*	*Amount*	*Annual Change*	*Amount*	*Annual Change*
2000	138,334	-	343,123	-	281,250,431	-
2010	148,940	0.8%	425,417	2.4%	308,738,557	1.0%
2022	163,750	0.8%	506,152	1.6%	335,707,629	0.7%
2027	169,882	0.7%	525,993	0.8%	339,902,535	0.2%

Source: Esri Demographics 2022, Novogradac, February 2023

HOUSEHOLDS

Year	PMA		MSA		USA	
	Amount	*Annual Change*	*Amount*	*Annual Change*	*Amount*	*Annual Change*
2000	57,374	-	133,213	-	105,409,443	-
2010	61,798	0.8%	165,232	2.4%	116,713,945	1.1%
2022	69,590	1.1%	200,582	1.8%	128,657,502	0.9%
2027	72,720	0.9%	209,685	0.9%	130,651,704	0.3%

Source: Esri Demographics 2022, Novogradac, February 2023

Historical population growth in the PMA trailed the MSA between 2000 and 2010. Growth in the PMA remained relatively stable between 2010 and 2022, however grew by less than the MSA. According to ESRI demographic projections, annualized PMA growth is expected to remain relatively stable at 0.7 percent through 2027, which is similar to growth expectations for the MSA and substantially above the nation.

Historical household growth in the PMA trailed the MSA between 2000 and 2010. Growth in the PMA accelerated between 2010 and 2022, however grew by less than the MSA. According to ESRI demographic projections, annualized PMA growth is expected to slow to 0.9 percent through 2027, which is similar to growth expectations for the MSA and substantially above the nation.

Employment and Unemployment Trends

The following table details employment and unemployment trends for the MSA from 2007 to November 2022.

EMPLOYMENT & UNEMPLOYMENT TRENDS (NOT SEASONALLY ADJUSTED)

Year	MSA				USA			
	Total Employment	% Change	Unemployment Rate	Change	Total Employment	% Change	Unemployment Rate	Change
2007	217,199	-	4.4%	-	146,046,667	-	4.6%	-
2008	212,520	-2.2%	7.0%	2.6%	145,362,500	-0.5%	5.8%	1.2%
2009	200,193	-5.8%	11.5%	4.6%	139,877,500	-3.8%	9.3%	3.5%
2010	193,559	-3.3%	13.1%	1.6%	139,063,917	-0.6%	9.6%	0.3%
2011	193,051	-0.3%	12.9%	-0.3%	139,869,250	0.6%	9.0%	-0.7%
2012	195,971	1.5%	11.5%	-1.4%	142,469,083	1.9%	8.1%	-0.9%
2013	200,028	2.1%	9.8%	-1.7%	143,929,333	1.0%	7.4%	-0.7%
2014	205,027	2.5%	7.8%	-2.0%	146,305,333	1.7%	6.2%	-1.2%
2015	210,993	2.9%	6.3%	-1.5%	148,833,417	1.7%	5.3%	-0.9%
2016	218,188	3.4%	5.1%	-1.2%	151,435,833	1.7%	4.9%	-0.4%
2017	228,460	4.7%	4.1%	-0.9%	153,337,417	1.3%	4.3%	-0.5%
2018	241,134	5.5%	3.5%	-0.6%	155,761,000	1.6%	3.9%	-0.4%
2019	248,694	3.1%	3.3%	-0.2%	157,538,083	1.1%	3.7%	-0.2%
2020	229,466	-7.7%	8.3%	5.0%	147,794,750	-6.2%	8.1%	4.4%
2021	243,752	6.2%	4.3%	-4.0%	152,580,667	3.2%	5.4%	-2.7%
2022 YTD Average*	248,783	2.1%	3.1%	-1.2%	158,238,273	3.7%	3.7%	-1.7%
Nov-2021	244,958	-	2.6%	-	155,797,000	-	3.9%	-
Nov-2022	250,262	2.2%	3.5%	0.9%	158,749,000	1.9%	3.4%	-0.5%

Source: U.S. Bureau of Labor Statistics, January 2023
*2022 YTD Average is through November

Between 2012 and 2019, job growth in the MSA generally exceeded the nation. Employment in the MSA declined sharply by 7.7 percent in 2020 amid the pandemic, compared to 6.2 percent across the overall nation. The MSA subsequently recovered all pandemic-related job losses, and employment levels are currently at a post-recessionary record. As of November 2022, employment in the MSA is increasing at an annualized rate of 2.2 percent, similar to the 1.9 percent growth reported across the nation.

During the period preceding the onset of COVID-19 (2012 - 2019), the MSA generally experienced a higher unemployment rate relative to the nation. The MSA unemployment rate increased substantially by 5.0 percentage points in 2020 amid the pandemic, reaching a high of 8.3 percent. For comparison, the national unemployment rate rose by 4.4 percentage points and reached a high of 8.1 percent over the same time period. According to the latest labor statistics, dated November 2022, the current MSA unemployment rate is 3.5 percent. This is well below the COVID highs of 2020, and similar to the current national unemployment rate of 3.4 percent.

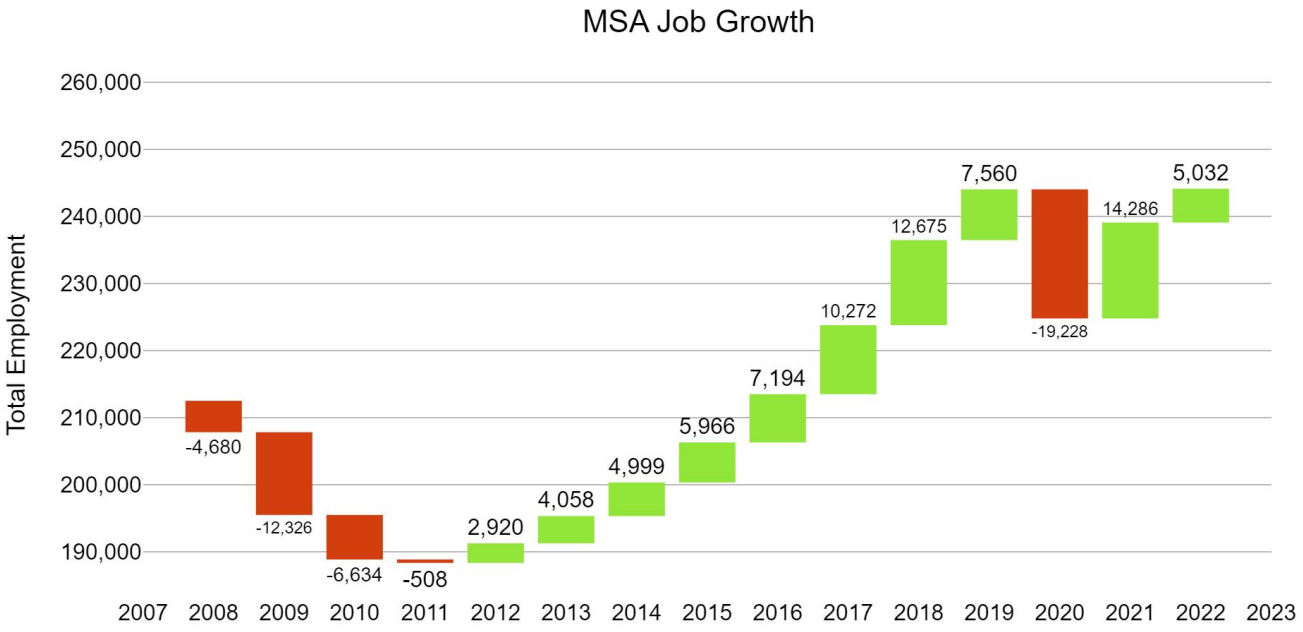

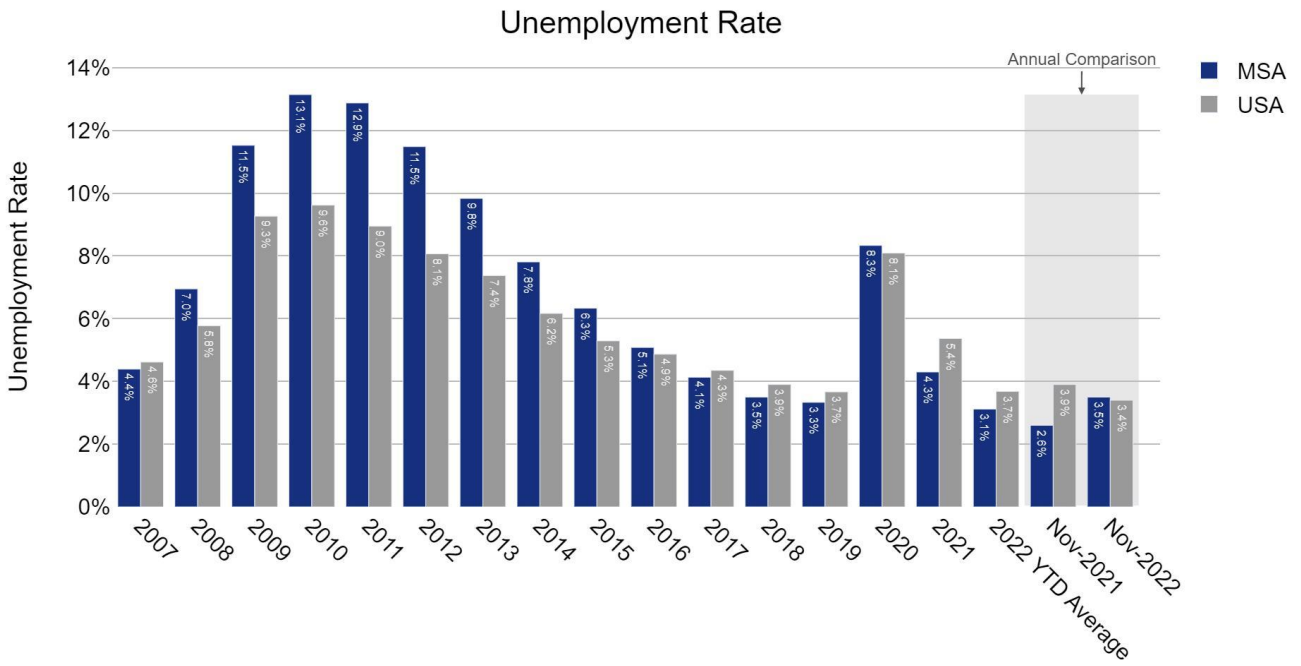

Description of Immediate Market Area

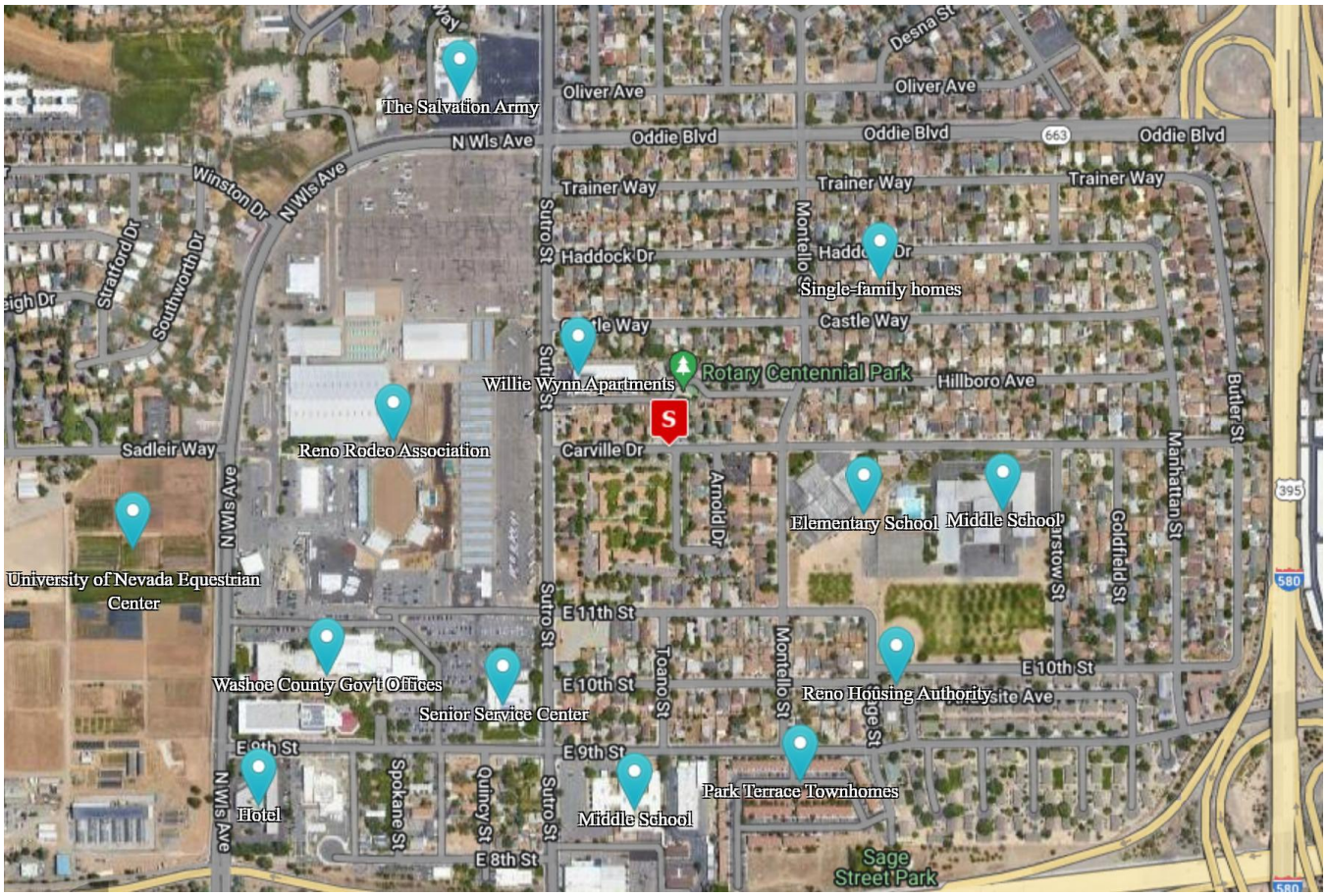

The Subject site is located in Reno, Nevada approximately 0.33 miles north of Interstate 80. The immediate neighborhood consists of single-family homes, public, and commercial uses. Residential uses in the Subject's neighborhood are generally in average to good condition. Commercial areas in the Subject's neighborhood are

approximately 90 percent occupied. The Subject site is designated as “Car Dependent” by WalkScore with a score of 46, indicating a car is required for daily errands.No detrimental influences or site nuisances were observed.

Locational Amenities

The following map and table illustrate the Subject’s proximity to necessary services. Map numbers correspond with the *Locational Amenities Map*, presented below.

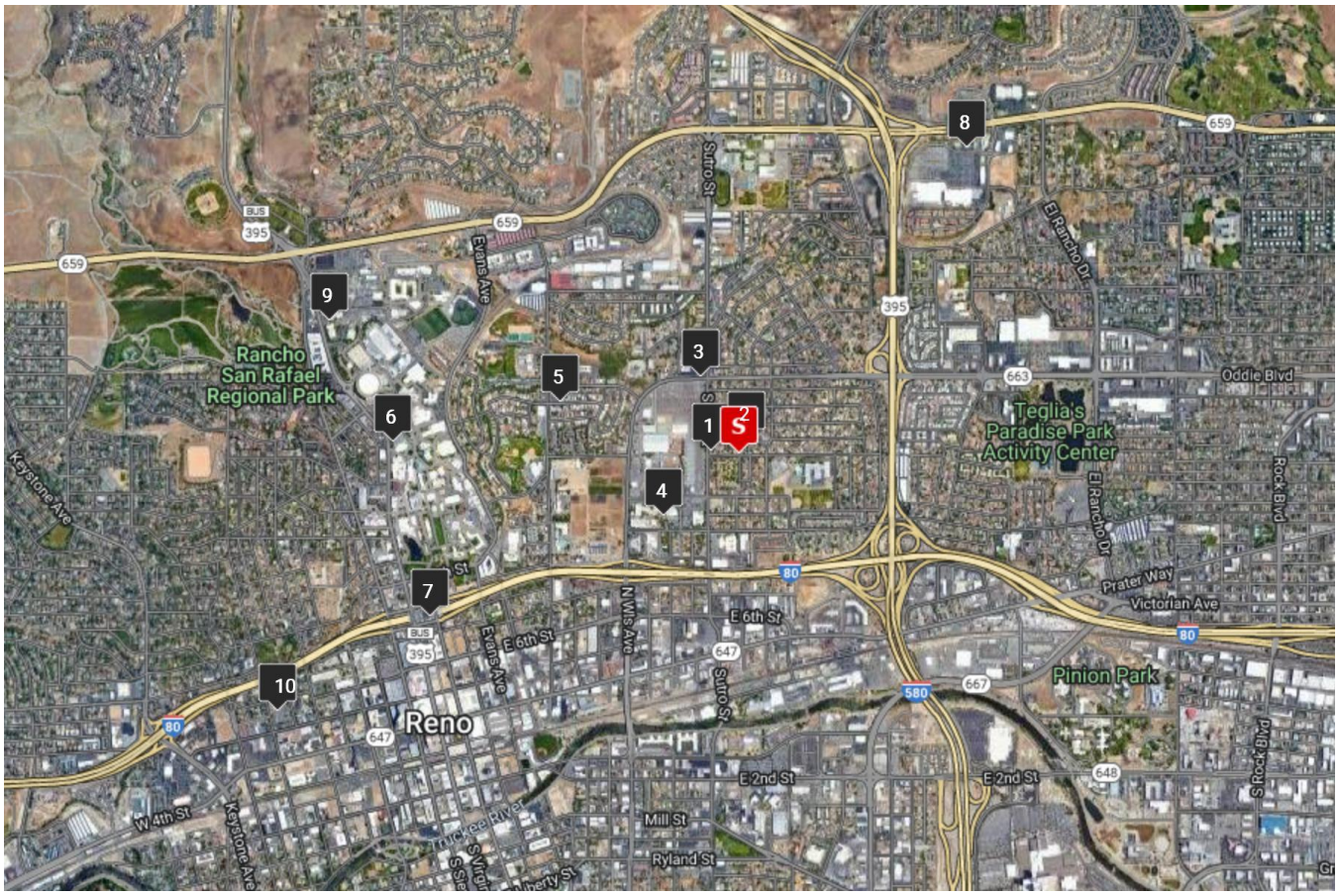

Source: Google Earth, February 2023

LOCATIONAL AMENITIES

#	Service or Amenity	Distance to Subject	Drive Time
1	Sutro Street Bus Stop	0.1 miles	1 mins
2	Centennial Park	0.1 miles	1 mins
3	Sinclair Gas Station	0.3 miles	2 mins
4	Fire Station	0.3 miles	2 mins
5	Valley Market	0.6 miles	3 mins
6	Police Station	1.1 miles	6 mins
7	Walgreens	1.1 miles	6 mins
8	Wells Fargo Bank	1.2 miles	7 mins
9	US Post Office	1.3 miles	7 mins
10	Saint Mary	1.6 miles	8 mins

Public Transportation

The Subject is located 0.1 miles east of the Sutro Street and Carville Drive Bus Stop, which provides transportation throughout Washoe County. Normal single ride fare is $2.00 and the discounted fare for seniors and persons with disabilities is $1.00. Passengers can also purchase a day pass for $3.00 or discounted for $1.50.

Crime Indices

The table below illustrates crime indices in the PMA and MSA in comparison to that of the nation. A crime index below 100 is below the national average and anything over 100 is above the nation's crime index average. A crime index of 75 in a PMA would be 25 percent below the national average while a crime index of 200 would be twice that of the national average. Crime indices were provided by 2022 ESRI Demographics data.

2022 CRIME INDICES

	PMA	MSA
Total Crime*	**154**	**131**
Personal Crime*	**144**	**124**
Murder	110	95
Rape	160	135
Robbery	154	113
Assault	138	129
Property Crime*	**155**	**132**
Burglary	134	131
Larceny	160	132
Motor Vehicle Theft	176	140

Source: Esri Demographics 2022, Novogradac, February 2023
*Unweighted aggregations

Total crime indices in the PMA are modestly elevated relative to the national average and above the surrounding MSA. Both geographic areas feature crime indices above the overall nation. In particular, the category of property crime in the PMA is substantially elevated relative to the nation. The upcoming Supply Section of this report provides a more detailed analysis of crime indices on a 0.5 mile basis.

NARRATIVE DESCRIBING SELECTION OF COMPARABLES

NARRATIVE DESCRIBING SELECTION OF COMPARABLES

Comparables are selected based on the six point criteria as provided under Section 9-10 of Chapter Nine in the Rent Comparability Studies guidelines. These six criteria are as follows:

- Are in the same market area as the Subject project.
- Are not receiving tenant rental assistance (project-based Section 8, certificates/vouchers, PRAC/PAC in a 202/811 project, Rent Supplement, RAP, or any comparable federal/state/other public subsidy). The tenant must be responsible for the full rent due to the landlord.
- Have locations and neighborhood conditions (including crime rates and accessibility to services, employment, transportation) like the Subject's.
- Are projects that are like the Subject in terms of project structure and layout, design, street appeal, age, size and unit mix, unit amenities and utilities.
- Provide services and have project amenities similar to those available at the Subject.
- Are not rent-restricted or controlled by a federal, state, local, or other public program. This category includes LIHTC, HOME, HOPE VI, state/local rent controlled and rent stabilization units, and all units in 236, BMIR, 202/811, and Section 515 Rural Development projects.

We conducted detailed interviews with multifamily properties in the Subject's area, and selected five comparable properties to be utilized in the 92273-S8 adjustment grids. We believe the comparables used in the grids are the most similar to the Subjects studio units and are adequate to support our concluded achievable rents. *It should be noted that there are no market rate properties offering SRO units with shared common areas and kitchens. As such, we have compared the Subject's units to studio units. Although the Subject does not offer full studio units, we utilized studio units at rental properties as comparable units in the rent grids rather than classified listings for shared homes or room rentals. The details of classified listings are typically difficult to confirm and report, specifically the utility structure, square footage, and in-unit amenities. As such, we used classified room rentals and studio rentals to support our adjustments regarding differences in bedrooms rather than as comparables within this report. Although these comparables are not all local to the Subject's neighborhood, we believe they provide adequate support for the Subject's as-is scenario. Additionally, we were unable to find any listings studio units that were more proximate to the Subject site, or any other comparables through CoStar that offer shared common area and kitchen space. CoStar tracks the most comparable properties by aggregating people's searches. The most comparable properties, according to their data, are the ones we used, or are affordable developments. Overall, these locations are considered generally comparable.*

Several of the developments have been excluded due to tenancy, dissimilar unit mix, or affordable/subsidized rent structure. Overall, we believe that the chosen comparables offer a good representation of the Subject's rental market.

EXCLUDED PROPERTIES

Property Name	Rent Structure	Tenancy	Reason for Exclusion
2300 West Apartments	Market	Family	More similar properties available
3rd Street Flats	Market	Family	More similar properties available
Basecamp At RED	Market	Family	More similar properties available
Brooktree	Market	Family	More similar properties available
Centennial Garden Apartments	Market	Family	More similar properties available
Century Park Apartments	Market	Family	More similar properties available
Edgewater At Virginia Lake	Market	Family	More similar properties available
El Chaparral Apartments	Market	Family	More similar properties available
Emory At RED	Market	Family	More similar properties available
Gibson Apartments	Market	Family	More similar properties available
Harvard Apartments	Market	Family	More similar properties available
Kings Inn	Market	Family	More similar properties available
Kirman Garden Apartments	Market	Family	More similar properties available
Lakeview Apartments	Market	Family	More similar properties available
Loft 205	Market	Family	More similar properties available
Northwind Apartments	Market	Family	More similar properties available
Sierra View Apartments	Market	Family	More similar properties available
Sierra Vista Tower Apartments	Market	Family	More similar properties available
Silver Ridge Apartments	Market	Family	More similar properties available
The Boulders Apartments	Market	Family	More similar properties available
Truckee River Terrace	Market	Family	More similar properties available
University Terrace	Market	Family	More similar properties available
Village At Idlewild Park	Market	Family	More similar properties available
Vista Ridge Apartments	Market	Family	More similar properties available
888 Willow	LIHTC	Senior	Dissimilar tenancy and Affordable Rents
Aspen Terrace	LIHTC	Family	Affordable Rents
Carriage Stone Apartments	LIHTC	Family	Affordable Rents
Carriage Stone Senior Apartments	LIHTC	Senior	Dissimilar tenancy and Affordable Rents
Citi Vista Senior Apartments	LIHTC	Senior	Dissimilar tenancy and Affordable Rents
Cottonwood Village Apartments	LIHTC	Family	Affordable Rents
El Cortez Apartments	LIHTC	Senior	Dissimilar tenancy and Affordable Rents
Hillside Meadows	LIHTC	Family	Affordable Rents
Park Manor	LIHTC	Family	Affordable Rents
Plaza At 4th Street	LIHTC	Family	Affordable Rents
Professional Housing & Development Apartments (site C)	LIHTC	Family	Affordable Rents
River Place Senior	LIHTC	Senior	Dissimilar tenancy and Affordable Rents
The Village At North	LIHTC	Family	Affordable Rents
Trembling Leaves	LIHTC	Family	Affordable Rents
Willows At Wells	LIHTC	Senior	Dissimilar tenancy and Affordable Rents
Centennial Park Annex	Section 8	Family	Subsidized rents and Affordable Rents
John Butterworth Estates	Section 8	Family	Subsidized rents and Affordable Rents
Reno Silvercrest Residence	Section 8	Family	Subsidized rents and Affordable Rents
Silver Terrace Apartments	Section 8	Family	Subsidized rents and Affordable Rents
Sunset Ridge Apartments	Section 8	Family	Subsidized rents and Affordable Rents
Washoe Mills Apartments	Section 8	Family	Subsidized rents and Affordable Rents
William J. Raggio Plaza	Section 8	Family	Subsidized rents and Affordable Rents
El Centro Apartments	LIHTC/PBRA	Family	Subsidized rents and Affordable Rents
Juniper Village	LIHTC/PBRA	Family	Subsidized rents and Affordable Rents
Sagebrush Place II	LIHTC/Section 8	Family	Subsidized rents and Affordable Rents
Silver Terrace	LIHTC/Section 8	Family	Subsidized rents and Affordable Rents
Southridge Apartments	LIHTC/Market	Family	More similar properties available

Based on information provided to us, none of the selected comparable properties has an identity-of-interest with the owner or management of the Subject property. We have chosen the five most comparable properties in the market to use in each of the 92273-S8 adjustment grids.

LOCATOR MAP FOR SUBJECT AND COMPARABLES

Comparable Rental Property Map

The following map illustrates the location of the Subject in relation to the comparable properties.

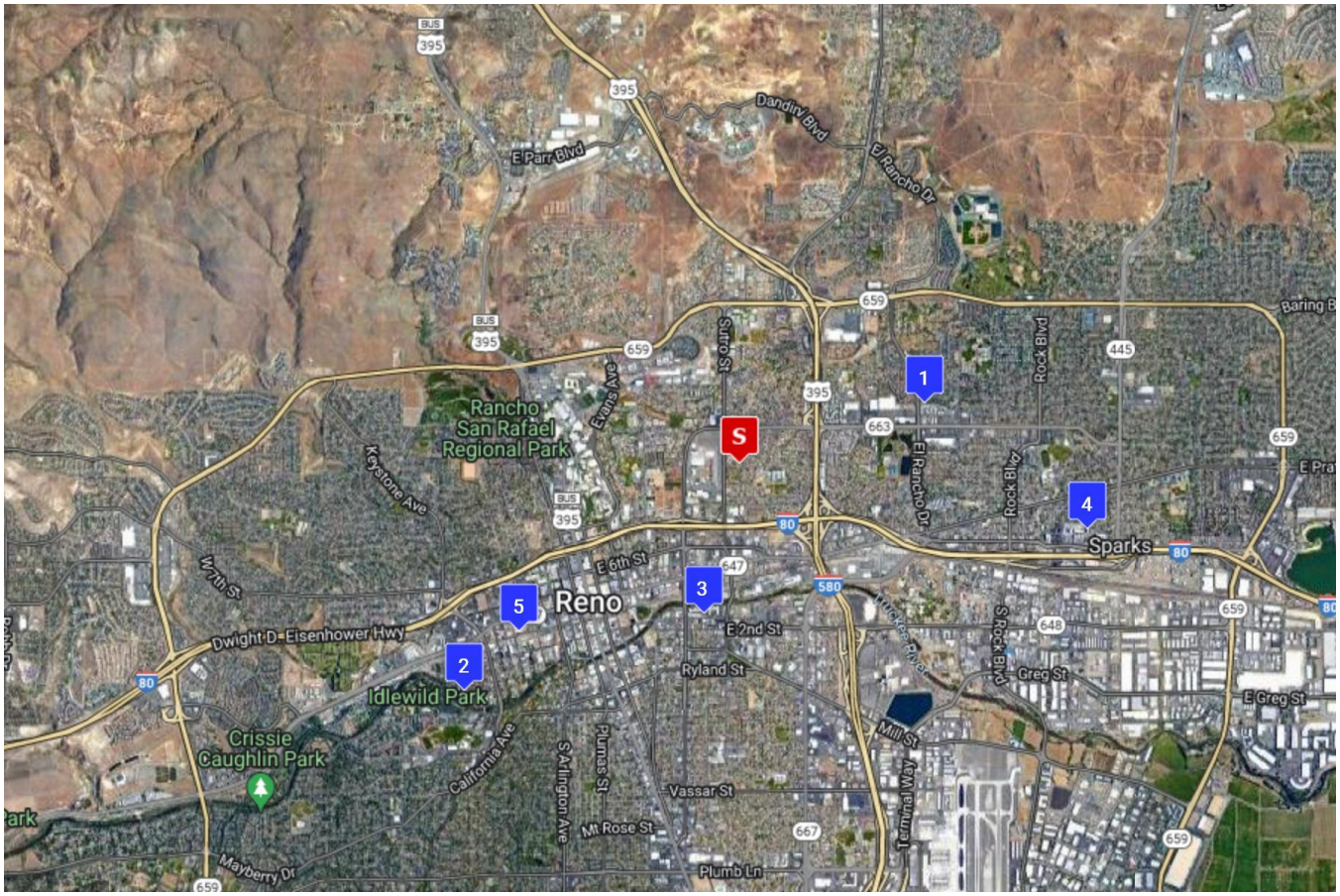

Source: Google Maps, February 2023

COMPARABLE PROPERTIES

#	Property Name	City	Rent Structure	Distance to Subject
S	**Carville Park Apartments**	**Reno**	**(Section 8), Non-Rental**	-
1	Parq Crossing Apartments	Sparks	Market	1.2 miles
2	River Arms	Reno	Market	2.2 miles
3	Riverwood Apartments	Reno	Market	0.9 mile
4	Square One Apartments	Sparks	Market	2.2 miles
5	The Onyx At 695	Reno	Market	1.7 miles

RENT COMPARABILITY GRID FOR EACH PRIMARY UNIT TYPE

Rent Comparability Grid | **Unit Type: 0BR/1BA - Garden - 169 sf - As Is** | **OMB Approval # 2502-0507 (exp. 04-30-2021)**

Subject FHA#: -

	Subject		Comparable #1	Comparable #2	Comparable #3	Comparable #4	Comparable #5
	Carville Park Apartments	**Data**	Parq Crossing Apartments	River Arms	Riverwood Apartments	Square One Apartments	The Onyx At 695
	1244 Carville Dr	**on**	2280 Oddie Blvd	1255 Jones Street	805 Kuenzli Street	1040 C St	695 W. 3rd St.
	Reno, Washoe County, NV	**Subject**	Sparks, Washoe County, NV	Reno, Washoe County, NV	Reno, Washoe County, NV	Sparks, Washoe County, NV	Reno, Washoe County, NV

A.	Rents Charged		Data	$ Adj	Data	$ Adj	Data	$ Adj	Data	$ Adj	Data	$ Adj
1	$ Last Rent / Restricted?		$1,321	N	$1,100	N	$945	N	$1,050	N	$1,150	N
2	Date Last Leased (mo/yr)		Feb-23		Feb-23		Feb-23		Feb-23		Feb-23	
3	Rent Concessions		N		N		N		N		N	
4	Occupancy for Unit Type		96%		100%		100%		100%		91%	
5	Effective Rent & Rent/ sq. ft		$1,321	$3.11	$1,100	$2.75	$945	$2.11	$1,050	$3.41	$1,150	$3.82

B.	Design, Location, Condition		Data	$ Adj	Data	$ Adj	Data	$ Adj	Data	$ Adj	Data	$ Adj
6	Structure / Stories	G / 2	E / 3	($5)	G / 3		G / 3		E / 5	($5)	E / 4	($5)
7	Yr. Built / Yr. Renovated	1979	2020		1963		1979		2016		1999 / 2020	
8	Condition / Street Appeal	A	E	($100)	A		A		E	($100)	G	($50)
9	Neighborhood	F	A		F		F		A		F	
10	Same Market? Miles to Subj.		Y/1.2		Y/2.2		Y/0.9		Y/2.2		Y/1.7	
C.	Unit Equipment/ Amenities		Data	$ Adj	Data	$ Adj	Data	$ Adj	Data	$ Adj	Data	$ Adj
11	# Bedrooms	SRO	0	($200)	0	($200)	0	($200)	0	($200)	0	($200)
12	# Bathrooms	1.0	1.0		1.0		1.0		1.0		1.0	
13	Unit Interior Sq. Ft.	169	425	($199)	400	($159)	448	($147)	308	($118)	301	($126)
14	Balcony / Patio	Y	N	$10	Y		Y		Y		N	$10
15	AC: Central / Wall	C	C		Wa	$5	C		C		Wa	$5
16	Range / Refrigerator	N	R / F		R / F		R / F		R / F		R / F	
17	Microwave / Dishwasher	N	M / D	($10)	D	($10)	D	($10)	M / D	($10)	M	
18	Washer / Dryer	L	WD	($35)	L		L		WD	($35)	L	
19	Floor Coverings	C	C		C		C		HW	($10)	HW	($10)
20	Window Coverings	B	B		B		B		B		B	
21	Cable / Satellite / Internet	Y	N	$40	N	$40	N	$40	N	$40	N	$40
22	Special Features	CF	CF / GD / WIC / WiFi	($15)	N	$5	GD		-		GD	
D.	Site Equipment/ Amenities		Data	$ Adj	Data	$ Adj	Data	$ Adj	Data	$ Adj	Data	$ Adj
24	Parking ($ Fee)	L	L		L		L / G($125)	($15)	L		G	($15)
25	Extra Storage	N	N		N		N		Y	($20)	N	
26	Security	Y	Y		N	$5	Y		Y		Y	
27	Clubhouse / Meeting Rooms	MR	MR		N	$10	N	$10	N	$10	N	$10
28	Pool / Recreation Areas	N	E / RR	($15)	N		P / E / R	($20)	E / R	($10)	E / RR	($15)
29	Business Ctr / Nbhd Network	N	BC	($10)	N		BC	($10)	BC	($10)	N	
30	Service Coordination	N	N		N		N		N		N	
31	Non-shelter Services	N	N		N		N		N		N	
32	Neighborhood Networks	N	N		N		N		N		N	
E.	Utilities		Data	$ Adj	Data	$ Adj	Data	$ Adj	Data	$ Adj	Data	$ Adj
33	Heat (in rent? / type)	Y / E	N / E		N / G		N / G		N / E		Y / G	
34	Cooling (in rent? / type)	N / C	N / C		N / Wa		N / C		N / C		Y / Wa	
35	Cooking (in rent? / type)	Y / E	N / E		N / E		N / E		N / E		Y / E	
36	Hot water (in rent? / type)	Y / E	N / E		Y / G		N / E		N / E		Y / E	
37	Other Electric	N	N		N		N		N		Y	($59)
38	Cold Water / Sewer	Y / Y	Y / Y		Y / Y		N / N	$93	N / N	$93	Y / Y	
39	Trash / Recycling	Y	Y		Y		N		N		Y	
F.	Adjustments Recap		Pos	Neg	Pos	Neg	Pos	Neg	Pos	Neg	Pos	Neg
40	# Adjustments B to D		2	(9)	5	(3)	2	(6)	2	(10)	4	(7)
41	Sum Adjustments B to D		$50	($589)	$65	($369)	$50	($402)	$50	($518)	$65	($421)
42	Sum Utility Adjustments						$93		$93			($59)
			Net	Gross	Net	Gross	Net	Gross	Net	Gross	Net	Gross
43	Net / Gross Adjustments B to E		($539)	$639	($304)	$434	($259)	$545	($375)	$661	($415)	$545
G.	Adjusted & Market Rents		Adj. Rent		Adj. Rent		Adj. Rent		Adj. Rent		Adj. Rent	
44	Adjusted Rent (5 + 43)		$782		$796		$686		$675		$735	
45	Adj Rent / Last rent			59%		72%		73%		64%		64%
46	Estimated Market Rent	$700	$4.14 Estimated Market Rent / Sq. Ft									

Appraiser's Signature

02-10-2023
Date

Attached are explanations of:

a. why & how each adjustment was made
b. how market rent was derived from adjusted rents
c. how this analysis was used for a similar unit type

Grid was prepared: [ ] Manually [X] Using HUD's Excel form

form HUD-92273-S8 (04/2002)

Rent Comparability Grid | **Unit Type: 0BR/1BA - Garden - 366 sf - As Renovated** | **OMB Approval # 2502-0507 (exp. 04-30-2021)**

Subject FHA#: -

	Subject		Comparable #1	Comparable #2	Comparable #3	Comparable #4	Comparable #5
	Carville Park Apartments	**Data**	Parq Crossing Apartments	River Arms	Riverwood Apartments	Square One Apartments	The Onyx At 695
	1244 Carville Dr	**on**	2280 Oddie Blvd	1255 Jones Street	805 Kuenzli Street	1040 C St	695 W. 3rd St.
	Reno, Washoe County, NV	**Subject**	Sparks, Washoe County, NV	Reno, Washoe County, NV	Reno, Washoe County, NV	Sparks, Washoe County, NV	Reno, Washoe County, NV

A.	Rents Charged		Data	$ Adj	Data	$ Adj	Data	$ Adj	Data	$ Adj	Data	$ Adj
1	$ Last Rent / Restricted?		$1,321	N	$1,100	N	$945	N	$1,050	N	$1,150	N
2	Date Last Leased (mo/yr)		Feb-23		Feb-23		Feb-23		Feb-23		Feb-23	
3	Rent Concessions		N		N		N		N		N	
4	Occupancy for Unit Type		96%		100%		100%		100%		91%	
5	Effective Rent & Rent/ sq. ft		$1,321	$3.11	$1,100	$2.75	$945	$2.11	$1,050	$3.41	$1,150	$3.82
B.	**Design, Location, Condition**		**Data**	**$ Adj**	**Data**	**$ Adj**	**Data**	**$ Adj**	**Data**	**$ Adj**	**Data**	**$ Adj**
6	Structure / Stories	G / 2	E / 3	($5)	G / 3		G / 3		E / 5	($5)	E / 4	($5)
7	Yr. Built / Yr. Renovated	1979 / 2023	2020		1963		1979		2016		1999 / 2020	
8	Condition / Street Appeal	G	E	($50)	A	$50	A	$50	E	($50)	G	
9	Neighborhood	F	A		F		F		A		F	
10	Same Market? Miles to Subj.		Y/1.2		Y/2.2		Y/0.9		Y/2.2		Y/1.7	
C.	**Unit Equipment/ Amenities**		**Data**	**$ Adj**	**Data**	**$ Adj**	**Data**	**$ Adj**	**Data**	**$ Adj**	**Data**	**$ Adj**
11	# Bedrooms	0	0		0		0		0		0	
12	# Bathrooms	1.0	1.0		1.0		1.0		1.0		1.0	
13	Unit Interior Sq. Ft.	366	425	($46)	400	($23)	448	($43)	308	$60	301	$62
14	Balcony / Patio	Y	N	$10	Y		Y		Y		N	$10
15	AC: Central / Wall	C	C		Wa	$5	C		C		Wa	$5
16	Range / Refrigerator	R / F	R / F		R / F		R / F		R / F		R / F	
17	Microwave / Dishwasher	N	M / D	($10)	D	($10)	D	($10)	M / D	($10)	M	
18	Washer / Dryer	L	WD	($35)	L		L		WD	($35)	L	
19	Floor Coverings	C	C		C		C		HW	($10)	HW	($10)
20	Window Coverings	B	B		B		B		B		B	
21	Cable / Satellite / Internet	Y	N	$40	N	$40	N	$40	N	$40	N	$40
22	Special Features	CF	CF / GD / WIC / WiFi	($15)	N	$5	GD		-		GD	
D.	**Site Equipment/ Amenities**		**Data**	**$ Adj**	**Data**	**$ Adj**	**Data**	**$ Adj**	**Data**	**$ Adj**	**Data**	**$ Adj**
24	Parking ($ Fee)	L	L		L		L / G($125)	($15)	L		G	($15)
25	Extra Storage	N	N		N		N		Y	($20)	N	
26	Security	Y	Y		N	$5	Y		Y		Y	
27	Clubhouse / Meeting Rooms	MR	MR		N	$10	N	$10	N	$10	N	$10
28	Pool / Recreation Areas	E	E / RR	($10)	N	$5	P / E / R	($15)	E / R	($5)	E / RR	($10)
29	Business Ctr / Nbhd Network	N	BC	($10)	N		BC	($10)	BC	($10)	N	
30	Service Coordination	Y	N	$15	N	$15	N	$15	N	$15	N	$15
31	Non-shelter Services	N	N		N		N		N		N	
32	Neighborhood Networks	N	N		N		N		N		N	
E.	**Utilities**		**Data**	**$ Adj**	**Data**	**$ Adj**	**Data**	**$ Adj**	**Data**	**$ Adj**	**Data**	**$ Adj**
33	Heat (in rent? / type)	Y / E	N / E		N / G		N / G		N / E		Y / G	
34	Cooling (in rent? / type)	N / C	N / C		N / Wa		N / C		N / C		Y / Wa	
35	Cooking (in rent? / type)	Y / E	N / E		N / E		N / E		N / E		Y / E	
36	Hot water (in rent? / type)	Y / E	N / E		Y / G		N / E		N / E		Y / E	
37	Other Electric	N	N		N		N		N		Y	($59)
38	Cold Water / Sewer	Y / Y	Y / Y		Y / Y		N / N	$93	N / N	$93	Y / Y	
39	Trash / Recycling	Y	Y		Y		N		N		Y	
F.	**Adjustments Recap**		**Pos**	**Neg**	**Pos**	**Neg**	**Pos**	**Neg**	**Pos**	**Neg**	**Pos**	**Neg**
40	# Adjustments B to D		3	(8)	8	(2)	4	(5)	4	(8)	6	(4)
41	Sum Adjustments B to D		$65	($181)	$135	($33)	$115	($93)	$125	($145)	$142	($40)
42	Sum Utility Adjustments						$93		$93			($59)
			Net	**Gross**	**Net**	**Gross**	**Net**	**Gross**	**Net**	**Gross**	**Net**	**Gross**
43	Net / Gross Adjustments B to E		($116)	$246	$102	$168	$115	$301	$73	$363	$43	$241
G.	**Adjusted & Market Rents**		**Adj. Rent**		**Adj. Rent**		**Adj. Rent**		**Adj. Rent**		**Adj. Rent**	
44	Adjusted Rent (5 + 43)		$1,205		$1,202		$1,060		$1,123		$1,193	
45	Adj Rent / Last rent			91%		109%		112%		107%		104%
46	Estimated Market Rent	$1,150	$3.14 Estimated Market Rent / Sq. Ft									

Appraiser's Signature

02-10-2023
Date

Attached are explanations of:

a. why & how each adjustment was made
b. how market rent was derived from adjusted rents
c. how this analysis was used for a similar unit type

Grid was prepared: [ ] Manually [X] Using HUD's Excel form | **form HUD-92273-S8 (04/2002)**

NARRATIVE EXPLAINING ADJUSTMENTS AND MARKET RENT CONCLUSIONS

Narrative Explaining Adjustments And Market Rent Conclusions

SRO (Garden - 169 SF) - As Is

The following narrative summarizes the adjustments applied to the comparables in the 92273-S8 Rent Comparability Grids. Line items are discussed in the order in which they appear on the form.

A. Rents Charged

1. $ Last Rent / Restricted?
All properties are market rate and required no adjustment.

2. Date Last Leased (month/year)
The comparables were surveyed in February 2023. No adjustments are necessary.

3. Rent Concessions
None of the comparables are offering concessions. Therefore, no adjustments are necessary.

4. Occupancy for Unit Type
All of the comparables are occupied at 91 percent or better. Accordingly, no adjustments are necessary.

B. Design, Location, Condition

6. Structure / Stories
The Subject offers a two-story garden-style structure, similar to two of the comparables. Parq Crossing Apartments offers a lowrise structure, which did not warrant any adjustment. Square One Apartments, The Bridges At Victorian Square, and The Onyx At 695 offer midrise structures that offer elevators, and received a negative adjustment of $5.

7. Year Built / Renovated
The Subject was built in 1979. The comparables were constructed between 1963 and 2020. One of the comparables reported subsequent renovations (The Onyx At 695). We have not applied an adjustment for age, as we consider condition and appeal to be a better indicator than age. Further, HUD guidelines dictate that adjustments for lines 7 and 8 should not be duplicated. Condition and appeal takes into account the age of the property, therefore, we do not believe an additional adjustment is deemed necessary for year built.

8. Condition / Street Appeal
The Subject was built in 1979. Based on our site inspection, the Subject is currently in average condition, similar to River Arms and Riverwood Apartments. Parq Crossing Apartments and Square One Apartments were built between 2016 and 2020, and exhibit excellent condition. The Onyx At 695 was constructed or most-recently renovated in 2020 and exhibits good condition. The following table demonstrates the rent comparison used to derive our adjustments.

CONDITION ADJUSTMENT - AS IS

Property Name	Condition	0BR/1BA
Parq Crossing Apartments	Excellent	$897
Square One Apartments	Excellent	$790
Mean (Excellent)	-	**$844**
The Onyx At 695	Good	$795
Mean (Good)	-	**$795**
River Arms	Average	$806
Riverwood Apartments	Average	$691
Mean (Average)	-	**$749**
Difference Average vs Excellent		**($95)**
Difference Average vs Good		**($47)**

Note: quoted rents reflect all adjustments, except for condition

As shown in the preceding table there is a rent differential of $95 between the studio comparables in good versus excellent condition and a rent differential of $47 between average and good condition. Accordingly, we applied a negative adjustment of $100 to the comparables in excellent condition (Parq Crossing Apartments and Square One Apartments) and a negative adjustment of $50 to the comparable in good condition (The Onyx at 695). The remaining comparables warranted no adjustement.

9. Neighborhood

The Subject is located in a fair neighborhood, similar to two of the comparables. The neighborhoods surrounding Parq Crossing Apartments and Square One Apartments are considered average. We believe this difference in neighborhoods is not drastic and therefore did not warrant any adjustment.

LOCATIONAL COMPARISON SUMMARY

#	Property Name	Program	Distance Subject	Household Income	Median Home Value	Median Rent	Crime Index	Walk Score	Vacant Housing	% Renter HH
S	Carville Park Apartments	Section 8		$36,444	$56,158	$861	212	49	7.2%	60.3%
1	Parq Crossing Apartments	Market	1.2 miles	$45,550	$238,443	$968	157	69	5.8%	64.6%
2	River Arms	Market	2.2 miles	$36,988	$52,070	$1,034	148	78	9.7%	75.0%
3	Riverwood Apartments	Market	0.9 mile	$28,406	$25,100	$962	242	83	12.0%	83.1%
4	Square One Apartments	Market	2.2 miles	$38,963	$238,443	$968	157	84	12.0%	80.5%
5	The Onyx At 695	Market	1.7 miles	$44,373	$52,070	$1,034	185	94	14.1%	62.0%

10. Same Market? Miles to Subj.

The comparables are located between 0.9 and 2.2 miles of the Subject. All of the comparables are located in the same (or similar) markets. Therefore, no adjustments are necessary.

C. Unit Equipment/Amenities

11. # Bedrooms

The following adjustment is not a true bedroom adjustment as none of the below classifieds offer separate bedrooms in the rentals. However, as SRO adjustments do not have a special line for adjusting in the rent grids, we made this adjustment in the bedroom adjustment line.

It should be noted that the Subject consists of a four-story, lowrise building, a duplex and single-family homes with one occupant per bedroom. The units offer only private bedrooms and tenants must share common areas, such as bathrooms, kitchens and living rooms with the other tenants. Based upon information provided by the client, it appears that HUD views this property as offering 208 Single Room Occupancy (SRO) units. We assume HUD has determined that this is appropriately classified as an SRO. As such, we analyzed the property as a 208 unit SRO property. The Subject's units are most comparable to SRO units. As stated previously, we could not obtain sufficient information from SRO and studio classifieds to input into the rent grids. Therefore,

we used local classifieds for room rentals and studio rentals to determine the adjustment for shared common areas. The following table details our findings.

STUDIO AND SINGLE ROOM RENTALS IN MARKET

Address	City	Type	Asking Rent
Withheld	Reno	Room Rental	$850
Red Baron Boulevard	Reno	Room Rental	$750
Leadership Parkway	Reno	Room Rental	$900
595 Humbolt Street	Reno	Room Rental	$620
Single Room Average			**$780**
219 N Center Street	Reno	Studio	$1,010
695 W3rd Street	Reno	Studio	$1,150
160 Sinclair Street	Reno	Studio	$1,095
Studio Average			**$1,085**
Differential for Size, Kitchen and Living Room			**$305**
Less: Size Adjustment			($60)
Adjustment for Shared Kitchen and Living Room			**$245**

As illustrated, the average room rental is $780 and the average studio rent is $1,085. The $245 differential consists of the difference for size and the lack of a private kitchen. We were unable to obtain unit sizes for the room rentals. As such, we have estimated the differential in size at $60. Therefore, the value for living room and kitchen is $245, which consists of the difference in the average rents between the room rentals and the SRO units less our estimated size adjustment. Therefore, a downward adjustment of $200 is applied to all of the comparables, which accounts for the $245 living room and kitchen adjustment. Although this is above the cap indicated in HUD's guide for adjustments, it meets the requirement that those adjustments made above the cap be supported with market evidence. We believe the paired analysis between properties to be sufficient market evidence.

12. # Bathrooms

All five comparables offer one bathroom in their units. The Subject's units offer a private bathroom. Therefore, no adjustments are warranted.

13. Unit Interior Square Feet

The Subject and the comparables vary in square footage. Most market observers agree that with all other variables being equal, a larger unit is more desirable than a smaller unit. However, the value of the additional square footage is mitigated to some degree by the similarity in perceived unit function (i.e. a 600 square foot one-bedroom functions similarly to a 700 square foot one bedroom) reflective of economies of scale. In other words, there is a diminishing return of value for additional square footage, as each additional square foot does not necessarily equal additional functional utility. Matched pairs are the preferred method to use for derivation of an adjustment, particularly in the case of differences in square footage. We used the following match pair analysis to estimate the marginal value of square footage in the local market.

SUPPORT FOR SQUARE FOOTAGE ADJUSTMENT

Property Name	Unit Type	Structure	Rent	SF	Rent / SF	Marginal RPSF (%)
The Onyx At 695	0BR/1BA	Midrise	$1,150	301	$3.82	38%
	0BR/1BA	Midrise	$1,225	353	$3.47	
	Difference		**$75**	**52**	**$1.44**	
3rd Street Flats	1BR/1BA	Midrise	$1,323	472	$2.80	19%
	1BR/1BA	Midrise	$1,390	598	$2.32	
	Difference		**$67**	**126**	**$0.53**	
3rd Street Flats	1BR/1BA	Midrise	$1,432	609	$2.35	23%
	1BR/1BA	Midrise	$1,562	849	$1.84	
	Difference		**$130**	**240**	**$0.54**	
Basecamp At RED	2BR/2BA	Lowrise	$2,590	802	$3.23	22%
	2BR/2BA	Lowrise	$2,755	1,031	$2.67	
	Difference		**$165**	**229**	**$0.72**	
Average						**26%**

The match pairs indicate price per square foot differentials ranging from 19 to 38 percent, with an average of 26 percent. We applied a 25 percent rent differential to comparables for the unit size adjustment. It should be noted that in accordance with HUD guidelines, we have not adjusted for size differences of less than 10 square feet. This adjustment is within HUD's guidance for sections 11-13.

14. Balcony / Patio
The Subject offers balconies/patios, similar to three of the comparables. The remaining two comparables do not offer balconies/patios, and received a positive adjustment of $10.

15. AC: Central / Wall
The Subject offers central air conditioning, similar to three of the comparables. River Arms and The Onyx At 695 offer wall a/c, and received a positive adjustment of $5.

16. Range / Refrigerator
The Subject offers range and refrigerators in the shared kitchen and commons space area. Adjustments for these appliances was applied in the previously presented 11. Bedroom adjustment.

17. Microwave / Dishwasher
The Subject does not offer dishwashers or microwaves. Riverwood Apartments, River Arms, Parq Crossing Apartments and Square One Apartments offer dishwashers and microwaves, and received a negative adjustment of $10. Microwaves are considered an ubiquitous feature and no adjustments are warranted.

18. Washer / Dryer
In order to determine appropriate adjustments for the comparable with washer/dryer connections, we have used a cost/benefit methodology. An $800 washer and dryer would cost approximately $22 per month over a three-year lifespan of the appliance. If a household does three loads of laundry per week for $3.00 per load, the cost would be approximately $36 per month. This indicates a $14 value to an in-unit washer and dryer. There is also an inherent convenience in offering a washer and dryer in-unit, which is significant. Therefore, we have concluded to a $35 value to in-unit washer/dryers, a $10 value to in-unit washer and dryer connections, and a $5 value for on premise central laundry.

The Subject offers central laundry, similar to three of the comparables. Square One Apartments and Parq Crossing Apartments offers washer/dryers, and received a negative adjustment of $30.

19. Floor Coverings
The Subject does not offer hardwood flooring, similar to four of the comparables. Square One Apartments and The Onyx At 695 offer hardwood flooring, and received a negative adjustment of $10.

20. Window Coverings
The Subject offers blinds, similar to all seven comparables. Therefore, no adjustments are necessary.

21. Cable / Satellite / Internet
The Subject offers complimentary internet. None of the comparables offer complimentary internet. We researched local internet rates for Reno and found the typical monthly cost for internet to range from $30 to $60. The remaining five comparables do not offer complimentary internet, and received a positive adjustment of $40.

22. Special Features
The Subject's special features include ceiling fans and are not expected to change following renovations. Notably, the Subject lacks several amenities offered by the comparables, including disposals, walk-in closets, and common area WiFi. The description and grid legend for the amenities offered by the Subject and surveyed comparables is detailed in the following table. Based on conversations with local property managers, we valued each special feature at $5.

Amenity - Legend	Subject	Parq Crossing Apartments	River Arms	Riverwood Apartments	Square One Apartments	The Onyx At 695
Ceiling Fan (CF)	yes	yes	no	no	no	no
Disposal (GD)	no	yes	no	yes	yes	yes
Walk-In-Closet (WIC)	no	yes	no	no	yes	no
WiFi (WiFi)	no	yes	no	no	yes	no
Special Features 0BR/1BA (As Is)	CF	CF / GD / WIC / WiFi	N	GD	-	GD
Line 22 Net Adjustment (As Is)	-	($15)	$5	$0	$0	$0

D. Site Equipment/Amenities

24. Parking ($ Fee)
The Subject offers surface parking, similar to four of the comparables. Riverwood Apartments and The Onyx at 695 offers garages and received a negative adjustment of $15.

	Subject	Parq Crossing Apartments	River Arms	Riverwood Apartments	Square One Apartments	The Onyx At 695
Walk Score	49	69	78	83	84	94
Parking						
Carport	no	no	no	no	no	no
Carport Fee	-	-	-	-	-	-
Garage	no	no	no	yes	no	yes
Garage Fee	-	-	-	$125	-	$0
Off-Street Parking	yes	yes	yes	yes	yes	no
Off-Street Fee	$0	N/A	$0	$0	N/A	-

25. Extra Storage
The Subject does not offer exterior storage, similar to four of the comparables. We researched storage units in Reno, 5x5 storage units ranged $49 to $71. Storage spaces at comparables are reportedly smaller; therefore, we have valued exterior storage at $20.

26. Security
The Subject offers video surveillance and security patrol. Four of the comparables offer at least one security feature. Therefore, no adjustments were warranted.

27. Clubhouse / Meeting Rooms
The Subject offers a clubhouse, similar to one of the comparables. The remaining four comparables do not offer clubhouses or meeting rooms, and received a positive adjustment of $10.

28. Pool / Recreation Areas
The Subject does not offer any recreational amenities. Notably, the Subject lacks several recreational amenities offered by the comparables, including a swimming pool, a fitness center, a courtyard, picnic areas, and recreational areas. The description and grid legend for the amenities offered by the Subject and surveyed comparables is detailed in the following table. Based on conversations with local property managers, we valued a swimming pool at $10 and the remaining amenities at $5 each.

Amenity - Legend	Subject	Parq Crossing Apartments	River Arms	Riverwood Apartments	Square One Apartments	The Onyx At 695
Swimming Pool - P	no	no	no	yes	no	no
Exercise Facility - E	no	yes	no	yes	yes	yes
Courtyard - R	no	no	no	no	no	yes
Picnic Area - R	no	yes	no	yes	yes	yes
Recreational Area - R	no	yes	no	no	no	no
Recreational Amenities (As Is)	N	E / RR	N	P / E / R	E / R	E / RR
Line 28 Net Adjustment (As Is)	-	($15)	$0	($20)	($10)	($15)

29. Business Center
The Subject does not offer a business center, similar to two of the comparables. Parq Crossing Apartments, Riverwood Apartments and Square One Apartments offer a business center, and received a negative adjustment of $10.

30. Service Coordination
The Subject does not offer service coordination, similar to all five comparables. Therefore, no adjustments are necessary.

31. Non-shelter Services
The Subject does not offer non-shelter services, similar to all five comparables. Therefore, no adjustments are necessary.

32. Neighborhood Networks
The Subject does not offer a neighborhood network, similar to all five comparables. Therefore, no adjustments are necessary.

E. Utilities

33. Heat (in rent? / type)
The Subject's rents include heating cost, similar to two of the comparables. The heating cost at the remaining five comparables is not included in the rent. As described previously, the heating costs are included in the electricity utility allowance provided. Therefore, no adjustment is indicated.

34. Cooling (in rent? / type)
The Subject's rents do not include cooling costs, similar to five of the comparables. The cooling costs at the remaining two comparables is included in the rent. As described previously, the cooling costs are included in the electricity utility allowance provided. Therefore, no adjustment is indicated.

35. Cooking (in rent? / type)
The Subject's rents include cooking costs, similar to two of the comparables. The cooking costs at the remaining five comparables is not included in the rent. As described previously, cooking costs are included in the electricity utility allowance provided. Therefore, no adjustment is indicated.

36. Hot water (in rent? / type)
The Subject's rents include water-heating costs, similar to three of the comparables. The water-heating costs at the remaining four comparables is not included in the rent. As described previously, the heating costs are included in the electricity utility allowance provided. Therefore, no adjustment is indicated.

37. Other Electric
The Subject's rents do not include general electric costs, similar to five of the comparables. The general electric costs at the remaining two comparables is included in the rent. Accordingly, we applied a negative adjustment of $59 to these two comparables.

38. Cold Water / Sewer
The Subjects rents include cold water and sewer costs, similar to three of the comparables. Two of the comparables do not include cold water and sewer costs, and received a positive adjustment of $93.

39. Trash / Recycling
The Subject's rents include trash and recycling removal expenses, similar to three of the comparables. The trash and recycling removal expenses at the remaining two comparables is not included in the rent. However, per the discussion in the utility allowance section of this report, trash costs are included in the water/sewer allowance, therefore no adjustments were warranted.

Sro (Garden - 169 SF) - As Is

The following table summarizes the adjusted rents for the Subject's studio unit analysis.

0BR/1BA - GARDEN - 169 SF									
#1		#2		#3		#4		#5	
Parq Crossing Apartments		River Arms		Riverwood Apartments		Square One Apartments		The Onyx At 695	
Sparks, NV		Reno, NV		Reno, NV		Sparks, NV		Reno, NV	
Adj. Rent		Adj. Rent		Adj. Rent		Adj. Rent		Adj. Rent	
$797		$806		$691		$690		$745	
	60%		73%		73%		66%		65%

The adjusted rents among the five comparables ranged from $690 to $806, with an average of $746 and median of $745. We placed the most reliance on Riverwood Apartments in the SRO grid, as this property received the least net adjustment. Overall, we determined the Subject's SRO achievable market rent (as is) to be $700. Our conclusion is within the range of the comparables and below the average and median adjusted rent.

STUDIO (GARDEN - 366 SF) - AS RENOVATED

Most of the adjustments applied in the 'As Is' scenario are identical in the 'As Renovated' scenario. However, there are a few exceptions. Consideration has been given to the Subject's good condition as renovated, and the fact that the Subject's units will offer additional amenities described as follows.

8. Condition / Street Appeal

The Subject was built in 1979. Based on our site inspection, the Subject is currently in average condition. The Subject is proposed to undergo renovations with estimated hard costs of $118,344 per unit. Following completion of the renovations, we expect the Subject will exhibit good condition, similar to two of the comparables. Parq Crossing Apartments, Square One Apartments, and The Bridges At Victorian Square were built between 2016 and 2020, and exhibit excellent condition. The following table demonstrates the rent comparison used to derive our adjustments.

CONDITION ADJUSTMENT - AS RENOVATED

Property Name	Condition	0BR/1BA
Parq Crossing Apartments	Excellent	$1,270
Square One Apartments	Excellent	$1,188
Mean (Excellent)	-	**$1,229**
The Onyx At 695	Good	$1,203
Mean (Good)	-	**$1,203**
River Arms	Average	$1,162
Riverwood Apartments	Average	$1,015
Mean (Average)	-	**$1,089**
Difference Good vs Excellent		**($26)**
Difference Good vs Average		**$115**

Note: quoted rents reflect all adjustments, except for condition

As shown in the preceding table there is a rent differential of $26 between the studio comparables in good versus excellent condition, as well as a $115 difference between the comparables in good versus average condition. Accordingly, we applied a negative adjustment of $50 to the comparables in excellent condition (Parq Crossing Apartments and Square One Apartments) and a positive adjustment of $50 to the comparables in average condition (River Arms and Riverwood Apartments).

11. # Bedrooms

All five comparables offer studio units, similar to the Subject. Therefore, no adjustments are necessary.

13. Unit Interior Square Feet

The Subject and the comparables vary in square footage. Most market observers agree that with all other variables being equal, a larger unit is more desirable than a smaller unit. However, the value of the additional square footage is mitigated to some degree by the similarity in perceived unit function (i.e. a 600 square foot one-bedroom functions similarly to a 700 square foot one bedroom) reflective of economies of scale. In other words, there is a diminishing return of value for additional square footage, as each additional square foot does not necessarily equal additional functional utility. We used the following match pair analysis to estimate the marginal value of square footage in the local market.

SUPPORT FOR SQUARE FOOTAGE ADJUSTMENT

Property Name	Unit Type	Structure	Rent	SF	Rent / SF	Marginal RPSF (%)
The Onyx At 695	0BR/1BA	Midrise	$1,150	301	$3.82	38%
	0BR/1BA	Midrise	$1,225	353	$3.47	
	Difference		**$75**	**52**	**$1.44**	
3rd Street Flats	1BR/1BA	Midrise	$1,323	472	$2.80	19%
	1BR/1BA	Midrise	$1,390	598	$2.32	
	Difference		**$67**	**126**	**$0.53**	
3rd Street Flats	1BR/1BA	Midrise	$1,432	609	$2.35	23%
	1BR/1BA	Midrise	$1,562	849	$1.84	
	Difference		**$130**	**240**	**$0.54**	
Basecamp At RED	2BR/2BA	Lowrise	$2,590	802	$3.23	22%
	2BR/2BA	Lowrise	$2,755	1,031	$2.67	
	Difference		**$165**	**229**	**$0.72**	
Average						**26%**

The match pairs indicate price per square foot differentials ranging from 19 to 38 percent, with an average of 26 percent. We applied a 25 percent rent differential to comparables for the unit size adjustment. It should be noted that in accordance with HUD guidelines, we have not adjusted for size differences of less than 10 square feet. This adjustment is within HUD's guidance.

28. Pool / Recreation Areas

The Subject currently does not offer any recreational amenities. Following completion of the renovations, these amenities will expand to also include a fitness center. Notably, the Subject will lack several recreational amenities offered by the comparables, including a swimming pool, a courtyard, picnic areas, and recreational areas. The description and grid legend for the amenities offered by the Subject and surveyed comparables is detailed in the following table. Based on conversations with local property managers, we valued a swimming pool at $10 and the remaining amenities at $5 each.

Amenity - Legend	Subject	Parq Crossing Apartments	River Arms	Riverwood Apartments	Square One Apartments	The Onyx At 695
Swimming Pool - P	no	no	no	yes	no	no
Exercise Facility - E	yes	yes	no	yes	yes	yes
Courtyard - R	no	no	no	no	no	yes
Picnic Area - R	no	yes	no	yes	yes	yes
Recreational Area - R	no	yes	no	no	no	no
Recreational Amenities (As Renovated)	E	E / RR	N	P / E / R	E / R	E / RR
Line 28 Net Adjustment (As Renovated)	-	($10)	$5	($15)	($5)	($10)

30. Service Coordination

Following renovations, the Subject will offer service coordination from an outside provider. Service coordination services will include programs addressing basic health care, food insecurity, educational and financial literacy, and social isolation. None of the comparables offer service coordination. We applied a positive adjustment of $15 to all five comparables.

Studio (Garden - 366 SF) - As Renovated

The following table summarizes the adjusted rents for the Subject's renovated studio unit analysis.

0BR/1BA - GARDEN - 366 SF									
#1		**#2**		**#3**		**#4**		**#5**	
Parq Crossing Apartments		**River Arms**		**Riverwood Apartments**		**Square One Apartments**		**The Onyx At 695**	
Sparks, NV		**Reno, NV**		**Reno, NV**		**Sparks, NV**		**Reno, NV**	
Adj. Rent		**Adj. Rent**		**Adj. Rent**		**Adj. Rent**		**Adj. Rent**	
$1,220		**$1,212**		**$1,065**		**$1,138**		**$1,203**	
	92%		**110%**		**113%**		**108%**		**105%**

The adjusted rents among the five comparables ranged from $1,065 to $1,220, with an average of $1,168 and median of $1,203. We placed the most reliance on River Arms and The Onyx At 695 in the studio grid, as these properties received the least gross, net, and percentage adjustment. Overall, we determined the Subject's studio achievable market rent (as renovated) to be $1,150. Our conclusion is within the range of the comparables, similar to the average, and slightly below the median adjusted rent.

COMPARABLE RENT DISCUSSION

Unit Mix				Estimated Market Rent (As-Is)			Estimated Market Rent (As-Renovated)		
Unit Type	# Section 8 Units	# Non-Section 8 Units	Size (SF)	Achievable Rent	$/SF	Separate Grid?	Achievable Rent	$/SF	Separate Grid?
0BR/1BA - Garden	208	0	169	$700	$4.14	Y	$1,150	$3.14	Y
Total	**208**	**0**							

Rent Level Comparison

The following table presents market rent levels as derived through a survey of the market.

COMPARABLE PROPERTY RENT SUMMARY - AS IS AFTER ADJUSTMENT

Unit Type	Current Contract Rents	Adjusted Minimum	Adjusted Maximum	Adjusted Average	Market Rents - As Is
SRO	$641	$690	$806	$746	$700

COMPARABLE PROPERTY RENT SUMMARY - AS RENO AFTER ADJUSTMENT

Unit Type	Current Contract Rents	Adjusted Minimum	Adjusted Maximum	Adjusted Average	Market Rents - As Renovated
0BR/1BA	$641	$1,065	$1,220	$1,168	$1,150

Reconciliation of Market Rents

The analysis of the comparable properties in the market area has led to the following Market Rent conclusions for the Section 8 revenue units:

NET RENT CONCLUSIONS

Unit Type	# Units (Total)	# Units (Section 8)	# Units (Other Restriction)	# Units (Non-Revenue)	Current Contract Rents	Market Rents - As Is	Market Rents - As Renovated
0BR/1BA - Garden	208	208	0	0	$641	$700	$1,150
2BR/1BA – Garden	1	0	0	1	-	-	-
Total	**209**	**208**	**0**	**1**			

ADDENDUM A. COMPARABLE PROPERTY PROFILES

PROPERTY PROFILE REPORT

Parq Crossing Apartments

Effective Rent Date	2/01/2023
Location	2280 Oddie Blvd Sparks, NV 89431 Washoe County
Distance	1.2 miles
Units	288
Vacant Units	35
Vacancy Rate	12.2%
Type	Lowrise (3 stories)
Year Built/Renovated	2020 / N/A
Marketing Began	N/A
Leasing Began	N/A
Last Unit Leased	N/A
Major Competitors	None Identified
Tenant Characteristics	Mixed tenancy
Contact Name	Raine
Phone	833-726-7547



Market Information

Program	Market
Annual Turnover Rate	10%
Units/Month Absorbed	28
HCV Tenants	0%
Leasing Pace	1 week
Annual Chg. in Rent	Changes daily
Concession	$200 first month off 2BR
Waiting List	None

Utilities

A/C	not included -- central
Cooking	not included -- electric
Water Heat	not included -- electric
Heat	not included -- electric
Other Electric	not included
Water	included
Sewer	included
Trash Collection	included

Unit Mix (face rent)

Beds	Baths	Type	Units	Size (SF)	Rent	Concession (monthly)	Restriction	Waiting List	Vacant	Vacancy Rate	Max Rent?	Range
0	1	Lowrise (3 stories)	112	425	$1,321	$0	Market	No	5	4.5%	N/A	None
1	1	Lowrise (3 stories)	56	645	$1,650	$0	Market	No	10	17.9%	N/A	None
2	2	Lowrise (3 stories)	120	902	$1,870	$167	Market	No	20	16.7%	N/A	None

Unit Mix

Market	Face Rent	Conc.	Concd. Rent	Util. Adj.	Adj. Rent
Studio / 1BA	$1,321	$0	$1,321	$0	$1,321
1BR / 1BA	$1,650	$0	$1,650	$0	$1,650
2BR / 2BA	$1,870	$167	$1,703	$0	$1,703

© Novogradac & Company LLP 2023 All Rights Reserved.

Amenities

In-Unit

Blinds
Central A/C
Ceiling Fan
Microwave
Refrigerator
Washer/Dryer
Carpeting
Dishwasher
Garbage Disposal
Oven
Walk-In Closet

Security

Intercom (Buzzer)
Limited Access

Services

None

Property

Business Center/Computer Lab
Elevators
Off-Street Parking
Picnic Area
Wi-Fi
Clubhouse/Meeting Room/Community
Exercise Facility
On-Site Management
Recreation Areas

Premium

None

Other

Dog Wash, Dog Park

Comments

The contact reported that the property utilizes a daily pricing system, and rents change daily. The property is running a special of $2,000 off in move in costs for the two bedroom units only. Rents vary by unit type due to mountain views and furnishing options; the rents shown reflect the non-furnished units. The contact reported that they have had difficulty leasing the two bedroom units, as 20 are currently vacant. The property does not accept Housing Choice Vouchers. Surface parking is available at no additional monthly cost.

© Novogradac & Company LLP 2023 All Rights Reserved.

Trend Report

Vacancy Rates

1Q22	1Q23
8.7%	12.2%

Trend: Market

1BR / 1BA

Year	QT	Vac.	Face Rent	Conc.	Concd. Rent	Adj. Rent
2022	1	17.9%	$1,344	$63	$1,281	$1,281
2023	1	17.9%	$1,650	$0	$1,650	$1,650

2BR / 2BA

Year	QT	Vac.	Face Rent	Conc.	Concd. Rent	Adj. Rent
2022	1	8.3%	$1,554	$0	$1,554	$1,554
2023	1	16.7%	$1,870	$167	$1,703	$1,703

Studio / 1BA

Year	QT	Vac.	Face Rent	Conc.	Concd. Rent	Adj. Rent
2022	1	4.5%	$1,254	$63	$1,191	$1,191
2023	1	4.5%	$1,321	$0	$1,321	$1,321

Trend: Comments

1Q22 The contact reported that this is a new property and they were not able to provide their turnover rate because they have only been leasing units for the past 4-5 months. The contact reported that they are running a special of $750 off in move in costs for there studio and 1 bedroom apartments.

1Q23 The contact reported that the property utilizes a daily pricing system, and rents change daily. The property is running a special of $2,000 off in move in costs for the two bedroom units only. Rents vary by unit type due to mountain views and furnishing options; the rents shown reflect the non-furnished units. The contact reported that they have had difficulty leasing the two bedroom units, as 20 are currently vacant. The property does not accept Housing Choice Vouchers. Surface parking is available at no additional monthly cost.

© Novogradac & Company LLP 2023 All Rights Reserved.

Photos







© Novogradac & Company LLP 2023 All Rights Reserved.

PROPERTY PROFILE REPORT

River Arms

Effective Rent Date	2/08/2023
Location	1255 Jones Street Reno, NV 89503 Washoe County
Distance	2.2 miles
Units	65
Vacant Units	2
Vacancy Rate	3.1%
Type	Garden (3 stories)
Year Built/Renovated	1963 / N/A
Marketing Began	N/A
Leasing Began	N/A
Last Unit Leased	N/A
Major Competitors	None noted
Tenant Characteristics	Mostly singles and comples; there are two children
Contact Name	Mark
Phone	(775) 523-4670



Market Information

Program	Market
Annual Turnover Rate	36%
Units/Month Absorbed	N/A
HCV Tenants	14%
Leasing Pace	Immediate
Annual Chg. in Rent	Increased 4 percent
Concession	None
Waiting List	None

Utilities

A/C	not included -- wall
Cooking	not included -- electric
Water Heat	included -- gas
Heat	not included -- gas
Other Electric	not included
Water	included
Sewer	included
Trash Collection	included

Unit Mix (face rent)

Beds	Baths	Type	Units	Size (SF)	Rent	Concession (monthly)	Restriction	Waiting List	Vacant	Vacancy Rate	Max Rent?	Range
0	1	Garden (3 stories)	N/A	400	$1,100	$0	Market	No	1	N/A	N/A	None
1	1	Garden (3 stories)	N/A	650	$1,150	$0	Market	No	0	N/A	N/A	None
2	1	Garden (3 stories)	N/A	780	$1,550	$0	Market	No	1	N/A	N/A	None

Unit Mix

Market	Face Rent	Conc.	Concd. Rent	Util. Adj.	Adj. Rent
Studio / 1BA	$1,100	$0	$1,100	$0	$1,100
1BR / 1BA	$1,150	$0	$1,150	$0	$1,150
2BR / 1BA	$1,550	$0	$1,550	$0	$1,550

© Novogradac & Company LLP 2023 All Rights Reserved.

Amenities

In-Unit

Balcony/Patio
Blinds
Carpeting
Dishwasher
Oven
Refrigerator
Wall A/C

Security

None

Services

None

Property

Central Laundry
Off-Street Parking
On-Site Management

Premium

None

Other

None

Comments

This market rate property is located about one half mile west of downtown Reno in a neighborhood near the Truckee River. This is an older market rate property that has never been renovated but the premises are well maintained.

© Novogradac & Company LLP 2023 All Rights Reserved.

Trend Report

Vacancy Rates

2Q12	1Q15	1Q23
10.0%	0.0%	3.1%

Trend: Market

1BR / 1BA

Year	QT	Vac.	Face Rent	Conc.	Concd. Rent	Adj. Rent
2012	2	N/A	$675	$0	$675	$675
2015	1	N/A	$680	$0	$680	$680
2023	1	N/A	$1,150	$0	$1,150	$1,150

2BR / 1BA

Year	QT	Vac.	Face Rent	Conc.	Concd. Rent	Adj. Rent
2012	2	N/A	$750	$0	$750	$750
2015	1	N/A	$800	$0	$800	$800
2023	1	N/A	$1,550	$0	$1,550	$1,550

Studio / 1BA

Year	QT	Vac.	Face Rent	Conc.	Concd. Rent	Adj. Rent
2012	2	N/A	$575	$0	$575	$575
2015	1	N/A	$550	$0	$550	$550
2023	1	N/A	$1,100	$0	$1,100	$1,100

Trend: Comments

2Q12 No additional comments.

1Q15 This market rate property is located about one half mile west of downtown Reno in a more upscale neighborhood near the Truckee River. This is an older market rate property that has never been renovated but the premises are well maintained. The manager stated that the local apartment market has strengthened dramatically over the past several months. In May 2014, this property was 85 percent occupied. Now all unit are leased and the manager is turning down prospective clients. The last tenant who moved in was willing to take the unit "as is" without the owner cleaning it. The manager states this action is indicative of a strong market.

1Q23 This market rate property is located about one half mile west of downtown Reno in a neighborhood near the Truckee River. This is an older market rate property that has never been renovated but the premises are well maintained.

© Novogradac & Company LLP 2023 All Rights Reserved.

Photos









© Novogradac & Company LLP 2023 All Rights Reserved.

PROPERTY PROFILE REPORT

Riverwood Apartments

Effective Rent Date	2/08/2023
Location	805 Kuenzli Street Reno, NV 89502 Washoe County
Distance	0.9 miles
Units	340
Vacant Units	0
Vacancy Rate	0.0%
Type	Garden (3 stories)
Year Built/Renovated	1979 / N/A
Marketing Began	N/A
Leasing Began	N/A
Last Unit Leased	N/A
Major Competitors	None in the immediate area
Tenant Characteristics	Singles and families from Reno
Contact Name	Ashley
Phone	775-786-5737



Market Information

Program	Market
Annual Turnover Rate	28%
Units/Month Absorbed	N/A
HCV Tenants	0%
Leasing Pace	Within three weeks
Annual Chg. in Rent	Increased two to three percent
Concession	None
Waiting List	None

Utilities

A/C	not included -- central
Cooking	not included -- electric
Water Heat	not included -- electric
Heat	not included -- gas
Other Electric	not included
Water	not included
Sewer	not included
Trash Collection	not included

Unit Mix (face rent)

Beds	Baths	Type	Units	Size (SF)	Rent	Concession (monthly)	Restriction	Waiting List	Vacant	Vacancy Rate	Max Rent?	Range
0	1	Garden (3 stories)	89	448	$945	$0	Market	No	0	0.0%	N/A	None
1	1	Garden (3 stories)	63	674	$1,037	$0	Market	No	0	0.0%	N/A	None
1	1	Garden (3 stories)	93	794	$1,097	$0	Market	No	0	0.0%	N/A	None
2	1	Garden (3 stories)	95	816	$1,210	$0	Market	No	0	0.0%	N/A	None

Unit Mix

Market	Face Rent	Conc.	Concd. Rent	Util. Adj.	Adj. Rent
Studio / 1BA	$945	$0	$945	$93	$1,038
1BR / 1BA	$1,037 - $1,097	$0	$1,037 - $1,097	$0	$1,037 - $1,097
2BR / 1BA	$1,210	$0	$1,210	$0	$1,210

© Novogradac & Company LLP 2023 All Rights Reserved.

Amenities

In-Unit

Balcony/Patio
Carpeting
Coat Closet
Garbage Disposal
Refrigerator
Blinds
Central A/C
Dishwasher
Oven

Security

Limited Access
Patrol
Perimeter Fencing

Services

None

Property

Business Center/Computer Lab
Garage($125.00)
Off-Street Parking
Picnic Area
Exercise Facility
Central Laundry
On-Site Management
Swimming Pool

Premium

None

Other

None

Comments

As of the date of this report, the property manager was unavailable for interview. We relied on third-party data for rent and vacancy information.

© Novogradac & Company LLP 2023 All Rights Reserved.

Trend Report

Vacancy Rates

2Q17	4Q17	4Q18	1Q23
2.9%	6.8%	5.9%	0.0%

Trend: Market

1BR / 1BA

Year	QT	Vac.	Face Rent	Conc.	Concd. Rent	Adj. Rent
2017	2	3.8%	$860 - $965	$0	$860 - $965	$860 - $965
2017	4	1.3%	$820 - $870	$0	$820 - $870	$820 - $870
2018	4	N/A	$899 - $935	$0	$899 - $935	$899 - $935
2023	1	0.0%	$1,037 - $1,097	$0	$1,037 - $1,097	$1,037 - $1,097

2BR / 1BA

Year	QT	Vac.	Face Rent	Conc.	Concd. Rent	Adj. Rent
2017	2	3.2%	$975 - $1,025	$0	$975 - $1,025	$975 - $1,025
2017	4	10.5%	$950	$0	$950	$950
2018	4	N/A	$1,000	$0	$1,000	$1,000
2023	1	0.0%	$1,210	$0	$1,210	$1,210

Studio / 1BA

Year	QT	Vac.	Face Rent	Conc.	Concd. Rent	Adj. Rent
2017	2	1.1%	$830 - $870	$0	$830 - $870	$923 - $963
2017	4	12.4%	$750	$0	$750	$843
2018	4	N/A	$750	$0	$750	$843
2023	1	0.0%	$945	$0	$945	$1,038

Trend: Comments

2Q17 The contact reported that as units come available, they are being renovated with hardwood style laminate, new paint, and adding light fixtures to the living room. Additionally, the contact confirmed that wireless internet is included in the rent, and that mini-storage (large enough for a boat and trailer) is available for an additional $125 per month.

4Q17 The contact reported 23 vacant units, however 10 of these vacant units are pre-leased. The contact reported that as units come available, they are being renovated with hardwood style laminate, new paint, and adding light fixtures to the living room. Additionally, the contact confirmed that wireless internet is included in the rent, and that mini-storage (large enough for a boat and trailer) is available for an additional $125 per month.

4Q18 The contact reported units are taking longer to turn as they are being upgraded upon move out. Upgrades include hardwood style laminate, new paint, and adding light fixtures to the living room. Additionally, the contact confirmed that wireless internet is included in the rent, and that mini-storage (large enough for a boat and trailer) is available for an additional $125 per month.

1Q23 As of the date of this report, the property manager was unavailable for interview. We relied on third-party data for rent and vacancy information.

© Novogradac & Company LLP 2023 All Rights Reserved.

Photos









© Novogradac & Company LLP 2023 All Rights Reserved.

PROPERTY PROFILE REPORT

Square One Apartments

Effective Rent Date	2/27/2023
Location	1040 C St Sparks, NV 89431 Washoe County
Distance	2.2 miles
Units	100
Vacant Units	2
Vacancy Rate	2.0%
Type	Midrise (5 stories)
Year Built/Renovated	2016 / N/A
Marketing Began	N/A
Leasing Began	N/A
Last Unit Leased	N/A
Major Competitors	None identified
Tenant Characteristics	Mixed local area tenancy
Contact Name	Casey
Phone	(775) 331-0202



Market Information

Program	Market
Annual Turnover Rate	27%
Units/Month Absorbed	N/A
HCV Tenants	0%
Leasing Pace	Within two weeks
Annual Chg. in Rent	Fluctuated 0-7% since 4Q2021
Concession	None
Waiting List	None

Utilities

A/C	not included -- central
Cooking	not included -- electric
Water Heat	not included -- electric
Heat	not included -- electric
Other Electric	not included
Water	not included
Sewer	not included
Trash Collection	not included

Unit Mix (face rent)

Beds	Baths	Type	Units	Size (SF)	Rent	Concession (monthly)	Restriction	Waiting List	Vacant	Vacancy Rate	Max Rent?	Range
0	1	Midrise (5 stories)	N/A	308	$1,050	$0	Market	No	0	N/A	N/A	None
1	1	Midrise (5 stories)	N/A	616	$1,628	$0	Market	No	0	N/A	N/A	HIGH*
1	1	Midrise (5 stories)	N/A	616	$1,460	$0	Market	No	2	N/A	N/A	LOW*
2	2	Midrise (5 stories)	N/A	924	$1,602	$0	Market	No	0	N/A	N/A	None
3	2	Midrise (5 stories)	1	1,505	$2,798	$0	Market	No	0	0.0%	N/A	None

Unit Mix

Market	Face Rent	Conc.	Concd. Rent	Util. Adj.	Adj. Rent
Studio / 1BA	$1,050	$0	$1,050	$93	$1,143
1BR / 1BA	$1,460 - $1,628	$0	$1,460 - $1,628	$0	$1,460 - $1,628
2BR / 2BA	$1,602	$0	$1,602	$0	$1,602
3BR / 2BA	$2,798	$0	$2,798	$0	$2,798

© Novogradac & Company LLP 2023 All Rights Reserved.

Amenities

In-Unit

Balcony/Patio
Carpet/Hardwood
Coat Closet
Exterior Storage
Microwave
Refrigerator
Washer/Dryer
Blinds
Central A/C
Dishwasher
Garbage Disposal
Oven
Walk-In Closet

Security

Intercom (Buzzer)
Limited Access
Patrol
Perimeter Fencing
Video Surveillance

Services

None

Property

Business Center/Computer Lab
Exercise Facility
On-Site Management
Wi-Fi
Elevators
Off-Street Parking
Picnic Area

Premium

None

Other

Dog park

Comments

The contact stated that the property has performed well during COVID-19 pandemic, with the property maintaining 95 percent occupancy throughout the pandemic.

© Novogradac & Company LLP 2023 All Rights Reserved.

Trend Report

Vacancy Rates

4Q21	1Q22	2Q22	1Q23
2.0%	2.0%	2.0%	2.0%

Trend: Market

1BR / 1BA

Year	QT	Vac.	Face Rent	Conc.	Concd. Rent	Adj. Rent
2021	4	N/A	$1,450 - $1,500	$0	$1,450 - $1,500	$1,450 - $1,500
2022	1	N/A	$1,375 - $1,400	$0	$1,375 - $1,400	$1,375 - $1,400
2022	2	N/A	$1,375 - $1,400	$0	$1,375 - $1,400	$1,375 - $1,400
2023	1	N/A	$1,460 - $1,628	$0	$1,460 - $1,628	$1,460 - $1,628

2BR / 2BA

Year	QT	Vac.	Face Rent	Conc.	Concd. Rent	Adj. Rent
2021	4	N/A	$1,800 - $1,900	$0	$1,800 - $1,900	$1,800 - $1,900
2022	1	N/A	$1,800 - $1,900	$0	$1,800 - $1,900	$1,800 - $1,900
2022	2	N/A	$1,800 - $1,900	$0	$1,800 - $1,900	$1,800 - $1,900
2023	1	N/A	$1,602	$0	$1,602	$1,602

3BR / 2BA

Year	QT	Vac.	Face Rent	Conc.	Concd. Rent	Adj. Rent
2021	4	0.0%	$2,710	$0	$2,710	$2,710
2022	1	0.0%	$2,710	$0	$2,710	$2,710
2022	2	0.0%	$2,710	$0	$2,710	$2,710
2023	1	0.0%	$2,798	$0	$2,798	$2,798

Studio / 1BA

Year	QT	Vac.	Face Rent	Conc.	Concd. Rent	Adj. Rent
2021	4	N/A	$1,265 - $1,365	$0	$1,265 - $1,365	$1,358 - $1,458
2022	1	N/A	$1,265 - $1,365	$0	$1,265 - $1,365	$1,358 - $1,458
2022	2	N/A	$1,265 - $1,365	$0	$1,265 - $1,365	$1,358 - $1,458
2023	1	N/A	$1,050	$0	$1,050	$1,143

Trend: Comments

4Q21	The contact stated the property performed well during COVID-19 with the property maintaining 95 percent occupancy throughout the pandemic.
1Q22	N/A
2Q22	The contact stated that the property has performed well during COVID-19 pandemic, with the property maintaining 95 percent occupancy throughout the pandemic.
1Q23	N/A

© Novogradac & Company LLP 2023 All Rights Reserved.

Photos





© Novogradac & Company LLP 2023 All Rights Reserved.

PROPERTY PROFILE REPORT

The Onyx At 695

Effective Rent Date	2/08/2023
Location	695 W. 3rd St. Reno, NV 89503 Washoe County
Distance	1.7 miles
Units	240
Vacant Units	19
Vacancy Rate	7.9%
Type	Midrise (4 stories)
Year Built/Renovated	1999 / 2020
Marketing Began	N/A
Leasing Began	N/A
Last Unit Leased	1/30/2007
Major Competitors	N/A
Tenant Characteristics	Majority are singles, young couples, working in tourism, casinos, and food service industries
Contact Name	Melissa
Phone	775.284.2100



Market Information

Program	Market
Annual Turnover Rate	25%
Units/Month Absorbed	0
HCV Tenants	25%
Leasing Pace	None reported
Annual Chg. in Rent	Decreased three percent/increase two percent
Concession	None
Waiting List	None

Utilities

A/C	included -- wall
Cooking	included -- electric
Water Heat	included -- electric
Heat	included -- gas
Other Electric	included
Water	included
Sewer	included
Trash Collection	included

Unit Mix (face rent)

Beds	Baths	Type	Units	Size (SF)	Rent	Concession (monthly)	Restriction	Waiting List	Vacant	Vacancy Rate	Max Rent?	Range
0	1	Midrise (4 stories)	128	301	$1,150	$0	Market	No	12	9.4%	N/A	None
0	1	Midrise (4 stories)	14	353	$1,225	$0	Market	No	2	14.3%	N/A	None
0	1	Midrise (4 stories)	81	380	$1,150	$0	Market	No	5	6.2%	N/A	None
1	1	Midrise (4 stories)	17	405	$1,559	$0	Market	No	0	0.0%	N/A	None

Unit Mix

Market	Face Rent	Conc.	Concd. Rent	Util. Adj.	Adj. Rent
Studio / 1BA	$1,150 - $1,225	$0	$1,150 - $1,225	-$59	$1,091 - $1,166
1BR / 1BA	$1,559	$0	$1,559	$0	$1,559

© Novogradac & Company LLP 2023 All Rights Reserved.

Amenities

In-Unit

Blinds
Carpeting
Garbage Disposal
Oven
Wall A/C
Carpet/Hardwood
Coat Closet
Microwave
Refrigerator

Security

Intercom (Buzzer)
Intercom (Phone)
Limited Access
Perimeter Fencing
Video Surveillance

Services

None

Property

Courtyard
Exercise Facility
Central Laundry
Picnic Area
Elevators
Garage
On-Site Management

Premium

None

Other

None

Comments

This property is formerly known as Courtyard Centre Apartments, a LIHTC development that has been out of its compliance period since May 2022. Renovations in 2020 consisted of new flooring, kitchens, painting, light fixtures, and plumbing fixtures.

© Novogradac & Company LLP 2023 All Rights Reserved.

Trend Report

Vacancy Rates

4Q17	4Q18	1Q20	1Q23
0.0%	7.5%	35.0%	7.9%

Trend: Market

1BR / 1BA

Year	QT	Vac.	Face Rent	Conc.	Concd. Rent	Adj. Rent
2020	1	N/A	$1,255	$0	$1,255	$1,255
2023	1	0.0%	$1,559	$0	$1,559	$1,559

Studio / 1BA

Year	QT	Vac.	Face Rent	Conc.	Concd. Rent	Adj. Rent
2020	1	N/A	$1,195	$0	$1,195	$1,136
2023	1	8.5%	$1,150 - $1,225	$0	$1,150 - $1,225	$1,091 - $1,166

Trend: Comments

4Q17 The contact stated that the range in rents for the one-bedroom is due to the location of the unit in the building. The property is offering a concession of $100 off with a six month lease and $200 off a twelve month lease. The concession indicated in the table is for twelve month leases. Rent for the highest priced one-bedroom units decreased by 2.4 percent.

4Q18 This property is a 240-unit multifamily Low-Income Housing Tax Credit (LIHTC) property. All utilities are included except phone and cable. A LURA is attached to the site which requires all of the units to be set aside for residents earning 60 percent of AMI or less.

1Q20 This property is a former LIHTC development that no longer operates with LIHTC restrictions as of May 2019. The existing LIHTC tenants at the development are permitted to remain at the property and pay LIHTC rents through May 2022. The property is currently undergoing renovations, which are substantial and include common area upgrades and new unit interiors (including new flooring, kitchens, bathrooms, painting, light fixtures, and plumbing fixtures.) The manager reported that only the vacant units are being renovated, as approximately 65 percent of the units are still occupied by former LIHTC-qualified tenants who have remained at the property. All of the current vacancies are down units. The renovated units are anticipated to be available to lease beginning in February 2020. The market rate rents reflect asking rents, as there are no renovated units that are yet occupied.

1Q23 This property is formerly known as Courtyard Centre Apartments, a LIHTC development that has been out of its compliance period since May 2022. Renovations in 2020 consisted of new flooring, kitchens, painting, light fixtures, and plumbing fixtures.

© Novogradac & Company LLP 2023 All Rights Reserved.

Photos









© Novogradac & Company LLP 2023 All Rights Reserved.

ADDENDUM B. APPRAISER CERTIFICATION

RCS/USPAP APPRAISER CERTIFICATION

Project Name: Carville Park Apartments
FHA Project No: -

By my signature below, I certify that, to the best of my knowledge and belief:

- The statements of fact contained in this report are True and correct;
- The reported analyses, opinions, and conclusions are limited only by the reported assumptions and limiting conditions, and are our personal, impartial, and unbiased professional analyses, opinions, and conclusions;
- Neither the appraiser nor the appraisal group have completed any prior engagements on the property that is the Subject of this report within the three-year period immediately preceding the acceptance of this assignment.
- I have no bias with respect to the property that is the Subject of this report or to the ownership or management parties involved with this assignment;
- The racial/ethnic composition of the neighborhood surrounding the project in no way affected the appraisal determination;
- My engagement in and compensation for this assignment were and are not contingent upon the reporting of a predetermined rent or direction in rent. My fee is my only compensation for this rent study assignment. There are no other side agreements or considerations;
- My analyses, opinions, and conclusions were developed, and this report has been prepared, in conformity with the Uniform Standards of Professional Appraisal Practice, Appraisal Institute Requirements and all applicable HUD procedures for performing Rent Comparability Studies for Section 8 contracts;
- K. David Adamescu has inspected the interior and exterior of the Subject property and the exteriors of the comparable properties used in this report. Brad Weinberg has not inspected the Subject of this report.
- No one else provided significant professional assistance to the person signing this report except the persons listed here: David Boisture, K. David Adamescu and Jenna Jordan. If anyone is listed here, his/her contribution is identified in the Scope of Work section of this report.
- I am a certified general real estate appraiser, licensed and in good standing with the state appraiser regulatory agency where the Subject property is located and I meet all of the appraiser qualifications required in HUD's rent comparability procedures.
- I am not debarred or suspended from doing business with the Federal Government. I also am not under a Limited Denial of Participation (LDP) imposed by the HUD Multifamily Regional Center or Program Center having jurisdiction over the Section 8 project. Any LDPs in effect now or in the past three years were imposed by the following HUD offices: **Not Applicable**
- We certify that, to the best of our knowledge and belief, our analyses, opinions, and conclusions were developed, and this report complies with, the Code of Professional Ethics and Standards of Valuation Practice of the Appraisal Institute;
- The use of this report is subject to the requirements of the Appraisal Institute relating to review by its duly authorized representatives.
- As of the date of this report, Brad Weinberg, MAI, has completed the requirements of the continuing education program for Designated Members of the Appraisal Institute.

Warning: If you knowingly make a False statement on this form, you may be subject to civil penalties under Section 1001 of Title 18 of the United States Code. In addition, any person who knowingly and materially violates any required disclosure of information, including intentional non-disclosure, is subject to civil money penalty not to exceed $10,000.00 for each violation.

Appraiser's Name:	Brad Weinberg
Issuing State/License No:	Nevada 2007035992
Expiration:	06/30/2022
Date:	December 31, 2023
Signature:	

ADDENDUM C. ASSUMPTIONS AND LIMITING CONDITIONS

ASSUMPTIONS AND LIMITING CONDITIONS

1. In the event that the client provided a legal description, building plans, title policy and/or survey, etc., the consultant has relied extensively upon such data in the formulation of all analyses.

2. The legal description as supplied by the client is assumed to be correct and the author assumes no responsibility for legal matters, and renders no opinion of property title, which is assumed to be good and merchantable.

3. All encumbrances, including mortgages, liens, leases, and servitudes, were disregarded in this valuation unless specified in the report. It was recognized, however, that the typical purchaser would likely take advantage of the best available financing, and the effects of such financing on property value were considered.

4. All information contained in the report, which others furnished, was assumed to be True, correct, and reliable. A reasonable effort was made to verify such information, but the author assumes no responsibility for its accuracy.

5. The report was made assuming responsible ownership and capable management of the property. The analyses and projections are based on the basic assumption that the development will be managed and staffed by competent personnel and that the property will be professionally advertised and aggressively promoted.

6. The sketches, photographs, and other exhibits in this report are solely for the purpose of assisting the reader in visualizing the property. The author made no property survey, and assumes no liability in connection with such matters. It was also assumed there is no property encroachment or trespass unless noted in the report.

7. The author of this report assumes no responsibility for hidden or unapparent conditions of the property, subsoil or structures, or the correction of any defects now existing or that may develop in the future. Equipment components were assumed in good working condition unless otherwise stated in this report.

8. It is assumed that there are no hidden or unapparent conditions for the property, subsoil, or structures, which would render it more or less valuable. No responsibility is assumed for such conditions or for engineering, which may be required to discover such factors.

9. The investigation made it reasonable to assume, for report purposes, that no insulation or other product banned by the Consumer Product Safety Commission has been introduced into the Subject premises. Visual inspection by the consultant did not indicate the presence of any hazardous waste. It is suggested the client obtain a professional environmental hazard survey to further define the condition of the Subject soil if they deem necessary.

10. Any distribution of total property value between land and improvements applies only under the existing or specified program of property utilization. Separate valuations for land and buildings must not be used in conjunction with any other appraisal or study and are invalid if so used.

11. A valuation estimate for a property is made as of a certain day. Due to the principles of change and anticipation the value estimate is only valid as of the date of valuation. The real estate market is nonstatic and change and market anticipation is analyzed as of a specific date in time and is only valid as of the specified date.

12. Possession of the report, or a copy thereof, does not carry with it the right of publication, nor may it be reproduced in whole or in part, in any manner, by any person, without the prior written consent of the author particularly as to value conclusions, the identity of the author or the firm with which he or she is connected. Neither all nor any part of the report, or copy thereof shall be disseminated to the general public by the use of advertising, public relations, news, sales, or other media for public communication without the prior written consent and approval of the consultant. Nor shall the consultant, firm, or professional organizations of which the consultant is a member be identified without written consent of the consultant.

13. Disclosure of the contents of this report is governed by the Bylaws and Regulations of the professional organization with which the consultant is affiliated.

14. The author of this report is not required to give testimony or attendance in legal or other proceedings relative to this report or to the Subject property Unless satisfactory additional arrangements are made prior to the need for such services.

15. The opinions contained in this report are those of the author and no responsibility is accepted by the author for the results of actions taken by others based on information contained herein.

16. Opinions of value contained herein are estimates. There is no guarantee, written or implied, that the Subject property will sell or lease for the indicated amounts.

17. All applicable zoning and use regulations and restrictions are assumed to have been complied with, unless nonconformity has been stated, defined, and considered in the appraisal report.

18. It is assumed that all required licenses, permits, covenants or other legislative or administrative authority from any local, state, or national governmental or private entity or organization have been or can be obtained or renewed for any use on which the value estimate contained in this report is based.

19. On all appraisals, subject to satisfactory completion, repairs, or alterations, the appraisal report and conclusions are contingent upon completion of the improvements in a workmanlike manner and in a reasonable period of time.

20. All general codes, ordinances, regulations or statutes affecting the property have been and will be enforced and the property is not Subject to flood plain or utility restrictions or moratoriums, except as reported to the consultant and contained in this report.

21. The party for whom this report is prepared has reported to the consultant there are no original existing condition or development plans that would Subject this property to the regulations of the Securities and Exchange Commission or similar agencies on the state or local level.

22. Unless stated otherwise, no percolation tests have been performed on this property. In making the appraisal, it has been assumed the property is capable of passing such tests so as to be developable to its highest and best use.

23. No in-depth inspection was made of existing plumbing (including well and septic), electrical, or heating systems. The consultant does not warrant the condition or adequacy of such systems.

24. No in-depth inspection of existing insulation was made. It is specifically assumed no Urea Formaldehyde Foam Insulation (UFFI), or any other product banned or discouraged by the Consumer Product Safety Commission has been introduced into the property. The consultant reserves the right to review and/or modify this appraisal if said insulation exists on the Subject property.

25. Acceptance of and/or use of this report constitute acceptance of all assumptions and the above conditions. Estimates presented in this report are not valid for syndication purposes.

ADDENDUM D. QUALIFICATIONS OF CONSULTANTS

CURRICULUM VITAE
BRAD E. WEINBERG, MAI, CVA, CRE

I. Education

University of Maryland, Masters of Science in Accounting & Financial Management
University of Maryland, Bachelors of Arts in Community Planning

II. Licensing and Professional Affiliations

MAI Member, Appraisal Institute, No. 10790
Certified Valuation Analyst (CVA), National Association of Certified Valuators and Analysts (NACVA)
Member, The Counselors of Real Estate (CRE)
Member, Urban Land Institute
Member, National Council of Housing Market Analysts (NCHMA)

State of Alabama – Certified General Real Estate Appraiser, No. G00628
State of California – Certified General Real Estate Appraiser, No. AG27638
State of Florida – Certified General Real Estate Appraiser; No. RZ3249
State of Hawaii – Certified General Real Estate Appraiser, No. CGA0001291
State of Maryland – Certified General Real Estate Appraiser; No. 6048
State of New Jersey – Certified General Real Estate Appraiser; No. 42RG00224900
State of Nevada – Certified General Real Estate Appraiser, No. A.0207819-CG
State of Oregon – Certified General Real Estate Appraiser; No. C001280
State of Pennsylvania – Certified General Real Estate Appraiser; No. GA004111
State of Washington – Certified General Real Estate Appraiser, No. 1102433

III. Professional Experience

Partner, Novogradac & Company LLP
President, Capital Realty Advisors, Inc.
Vice President, The Community Partners Realty Advisory Services Group, LLC
President, Weinberg Group, Real Estate Valuation & Consulting
Manager, Ernst & Young LLP, Real Estate Valuation Services
Senior Appraiser, Joseph J. Blake and Associates
Senior Analyst, Chevy Chase F.S.B.
Fee Appraiser, Campanella & Company

IV. Professional Training

Appraisal Institute Coursework and Seminars Completed for MAI Designation and Continuing Education Requirements

National Association of Certified Valuators and Analysts (NACVA) Coursework and Seminars completed for Certified Valuation Analyst (CVA) Designation and Continuing Education Requirements

V. Speaking Engagements and Authorship

Numerous speaking engagements at Affordable Housing Conferences throughout the Country

Participated in several industry forums regarding the Military Housing Privatization Initiative

Authored "New Legislation Emphasizes Importance of Market Studies in Allocation Process," *Affordable Housing Finance, March 2001*

VI. Real Estate Assignments

A representative sample of Due Diligence, Consulting or Valuation Engagements includes:

- On a national basis, conduct market studies and appraisals for proposed Low-Income Housing Tax Credit properties. Analysis includes preliminary property screenings, market analysis, comparable rent surveys, demand analysis based on the number of income qualified renters in each market, supply analysis and operating expense analysis to determine appropriate cost estimates.

- On a national basis, conduct market studies and appraisals of proposed new construction and existing properties under the HUD Multifamily Accelerated Processing program. This includes projects under the 221(d)3, 221(d)4, 223(f), and 232 programs.

- Completed numerous FannieMae and FreddieMac appraisals of affordable and market rate multifamily properties for DUS Lenders.

- Managed and completed numerous Section 8 Rent Comparability Studies in accordance with HUD's Section 9 Renewal Policy and Chapter 9 for various property owners and local housing authorities.

- Designed and implemented rent reasonableness toolkit for Public Housing Agencies (PHA) in support of Housing Choice Voucher program. Rent reasonableness tool provides an estimated rent based on surveyed market conditions specific to the PHA.

- Developed a Flat Rent Model for the Trenton Housing Authority. Along with teaming partner, Quadel Consulting Corporation, completed a public housing rent comparability study to determine whether the flat rent structure for public housing units is reasonable in comparison to similar, market-rate units. THA also requested a flat rent schedule and system for updating its flat rents. According to 24 CFR 960.253, public housing authorities (PHAs) are required to establish flat rents, in order to provide residents a choice between paying a "flat" rent, or an "income-based" rent. The flat rent is based on the "market rent", defined as the rent charged for a comparable unit in the private, unassisted market at which a PHA could lease the public housing unit after preparation for occupancy. Based upon the data collected, the consultant will develop an appropriate flat rent schedule, complete with supporting documentation outlining the methodology for determining and applying the rents. We developed a system that THA can implement to update the flat rent schedule on an annual basis.

- As part of an Air Force Privatization Support Contractor team (PSC) to assist the Air Force in its privatization efforts. Participation has included developing and analyzing housing privatization concepts, preparing the Request for Proposal (RFP), soliciting industry interest and responses to housing privatization RFP, Evaluating RFP responses, and recommending the private sector entity to the Air Force whose proposal brings best value to the Air Force. Mr. Weinberg has participated on numerous initiatives and was the project manager for Shaw AFB and Lackland AFB Phase II.

- Conducted housing market analyses for the U.S. Army in preparation for the privatization of military housing. This is a teaming effort with Parsons Corporation. These analyses were done for the purpose of determining whether housing deficits or surpluses exist at specific installations. Assignment included local market analysis, consultation with installation housing personnel and local government agencies, rent surveys, housing data collection, and analysis, and the preparation of final reports.

- Developed a model for the Highland Company and the Department of the Navy to test feasibility of developing bachelor quarters using public-private partnerships. The model was developed to test various levels of government and private sector participation and contribution. The model was used in conjunction with the market analysis of two test sites to determine the versatility of the proposed development model. The analysis included an analysis of development costs associated with both MILCON and private sector standards as well as the potential market appeal of the MILSPECS to potential private sector occupants.

STATEMENT OF PROFESSIONAL QUALIFICATIONS
DAVID BOISTURE, ASA, CRE

I. Education

Ohio University, Athens, Ohio
Masters of Public Administration

Frostburg State University, Frostburg, Maryland
Bachelor of Science in Political Science and Justice Studies

II. Professional Experience

Partner, Novogradac & Company LLP
Graduate Assistant, Institute for Local Government and Rural Development

III. Professional Affiliation

Accredited Senior Appraiser of the American Society of Appraisers (ASA)
Member, The Counselors of Real Estate (CRE)
Designated Member of the National Council of Housing Market Analysts (NCHMA)
LEED Green Associate

IV. Professional Training

2020-2021 7-Hour National USPAP Update Course – February 2021
Fundamentals of Economic Life Development – December 2020
Renewable Energy Appraisals and Cost Segregation – Subject Matter Expert- November 2020
Purchase Price Allocation and Cost Segregation Studies – October 2020
Renewable Energy PPAs Risk and Valuation – April 2020
Introduction to Cost Segregation – August 2019
Aspects of Valuing Solar Installations – June 2019
Machinery and Equipment Valuation – Advanced Topics and Report Writing, January 2017
Machinery and Equipment Advanced Topics and Case Studies, November 2016
Machinery and Equipment Valuation Methodology, September 2016
Introduction to Machinery and Equipment Valuation, May 2016
IRS Valuation Summit, October 2014
Basic Appraisal Procedures, March 2014
15-hour National USPAP Equivalent, March 2014
Valuation of Solar Photovoltaic, February 2014
Residential Solar Photovoltaic Leases: Market Value Dilemma, February 2014
Basic Appraisal Principles, February 2014
Wind Projects and Land Value, October 2012

V. Real Estate Assignments

A representative sample of Due Diligence, Consulting, or Valuation Engagements includes:

- Completed Fair Market Value analyses for solar panel installations, wind turbine installations, and other renewable energy assets in connection with financing and structuring analyses performed by various clients. The clients include lenders, investors, owners, and developers. The reports are used by clients and their advisors to evaluate certain tax consequences applicable to ownership. Additionally, the reports have been used in the ITC funding process and in connection with the application for the federal grant identified as Section 1603 American Recovery & Reinvestment Act of 2009. The valuations have been completed assuming completion of the assets, as is, and at various stages of development. Valuations also include various operating renewable energy development businesses.

- Completed analyses of overall reasonableness with regard to Revenue Procedure 2014-12. Transactions analyzed include renewable energy projects involving the use of Investment Tax Credits. Fees and arrangements tested for reasonableness include developer fees, construction management fees, asset management fees, various leasing-related payments, and overall master lease terms.

- Have managed and prepared market studies for proposed Low-Income Housing Tax Credit, market rate, HOME financed, USDA Rural Development, and HUD subsidized properties, on a national basis. Analysis includes property screenings, market analysis, comparable rent surveys, demand analysis based on the number of income qualified renters in each market, supply analysis, and operating expenses analysis. Property types include proposed multifamily, senior independent living, large family, and acquisition with rehabilitation.

- Have managed and assisted in appraisals of proposed new construction, rehabilitation, and existing Low- Income Housing Tax Credit properties, USDA Rural Development, HUD subsidized properties, and market rate multifamily developments. Analysis includes property screenings, valuation analysis, rent comparability studies, expense comparability analysis, determination of market rents, and general market analysis.

- Assisted in preparing a comprehensive senior housing study in Seattle, Washington for the Seattle Housing Authority. This study evaluated the Seattle Housing Authority's affordable senior housing project for their position within the entire city's senior housing market. The research involved analysis of the senior population by neighborhood, income, household size, racial composition, and tenure.

- Have managed and assisted in the preparation of Rent Comparability Studies according the HUD Section 8 Renewal Policy in the Chapter 9 guidelines.

- Assisted in the review of Rent Comparability Studies for HUD Contract Administrators.

- Assisted in the HUD MAP Quality Control market study and appraisal reviews.

- Managed and assisted in the preparation of market studies for projects under the HUD Multifamily Accelerated Processing program. The market studies meet the requirements outlined in Chapter 7 of the HUD MAP Guide.

- Managed and assisted in appraisals of proposed new construction and existing properties under the HUD Multifamily Accelerated Processing program. The appraisals meet the requirements outlined in Chapter 7 of the HUD MAP Guide.

- Assisted in preparing an approved HUD Consolidated Plan for the City of Gainesville, GA; which included a housing and homeless needs assessment, market analysis, non-housing needs analysis, and a strategic plan, which conformed to 24CFR Part 91, Consolidated Plan Regulations for the ensuing five-year period (2004-2009).

- Assisted in various appraisals for the US Army Corps of Engineers including Walter Reed Army Medical Center, proposed office site on the Enhanced Use Lease sites Y and Z at Fort Meade, proposed automobile testing facility at the Yuma Proving Grounds, proposed industrial park at Camp Navajo, and the National Geospatial-Intelligence Agency.

- Managed the preparation of Site Inspection Reports and Appraisals as the subcontractor to the Transaction Team Specialist hired by the Department of Housing and Urban Development to facilitate the design and sale of HUD's nonperforming Multifamily and Healthcare notes.

STATEMENT OF PROFESSIONAL QUALIFICATIONS
K. DAVID ADAMESCU

I. Education

The Ohio State University, Columbus, OH
Masters of City and Regional Planning (MCRP)
Bachelors of Arts, Economics

II. Professional Experience

Manager, Novogradac & Company LLP
Real Estate Analyst, Novogradac & Company LLP
Project Director, VWB Research
Field Analyst, The Danter Company

III. Real Estate Assignments

A summary of assignments relating to market feasibility studies and appraisals includes:

- Written and supervised the production of over 1,000 rental housing market studies for projects located throughout 47 states as well as Puerto Rico and Virgin Islands. The preponderance of experience is with affordable housing developments, particularly those that operate with Section 42 Low-income Housing Tax Credit, HUD Section 8/202, and/or USDA Rural Development financing. Scope of analysis typically has included physical inspection of the property and market (have conducted over 400 property inspections throughout the United States and Puerto Rico), concept analysis, demographic and economic analysis, demand and absorption projections, comparable surveying, supply analysis and rent determination.

- Assisted in over 200 appraisals of multifamily rental housing, commercial office, and commercial retail properties. Analysis has included assisting with supply analysis and rent determination, operating expense analysis, capitalization rate determination, valuation utilizing the three approaches to value, insurable value estimation, and LIHTC equity valuation.

- Additional experience authoring market feasibility analyses for condominium housing, single-family housing, senior-oriented housing, seasonal housing, retail, office, golf course/marina resorts, and mixed-use developments.

- Conducted special research for highest and best use evaluations, the impact of “green” development principals on marketability, and seasonal housing dynamics.

- Reviewed third-party market studies and appraisals for investors in the secondary market.

STATEMENT OF PROFESSIONAL QUALIFICATIONS
Jenna A. Jordan

I. Education

Cleveland State University
Master of Urban Planning and Development, MUPD

II. Professional Experience

Analyst, *Novogradac Consulting LLP*
Junior Analyst, *Novogradac Consulting, LLP*

III. Real Estate Assignments

A representative sample of work on various types of projects:

- Prepared market studies for proposed Low-Income Housing Tax Credit, market rate, HOME financed, USDA Rural Development, and HUD subsidized properties, on a national basis. Analysis includes property screenings, market analysis, comparable rent surveys, demand analysis based on the number of income qualified renters in each market, supply analysis, and operating expenses analysis.

- Analyze and research economic trends such as unemployment, average wages, median income levels, and demand for low income housing in the target market area.

- Research web-based rent reasonableness systems and contact local housing authorities for utility allowance schedules, payment standards, and housing choice voucher information.

- Assisted in appraisals of proposed new construction, rehabilitation, and existing Low-Income Housing Tax Credit properties, USDA Rural Development, and market rate multifamily developments. Analysis includes property screenings, valuation analysis, rent comparability studies, expense comparability analysis, determination of market rents, and general market analysis.

ADDENDUM E. SUBJECT'S HUD RENT SCHEDULE AND UTILITY ALLOWANCE SCHEDULE

Rent Schedule
Low Rent Housing

U.S. Department of Housing and Urban Development
Office of Housing
Federal Housing Commissioner

OMB Approval No. 2502-0012
(exp. 11/30/2020)

See page 3 for Instructions, Public Burden Statement and Privacy Act requirements.

Project Name	FHA Project Number	Date Rents Will Be Effective (mm/dd/yyyy)
Carville Park Apartments	Uninsured	11/01/2022

Part A – Apartment Rents
Show the actual rents you intend to charge, even if the total of these rents is less than the Maximum Allowable Monthly Rent Potential.

Col. 1 Unit Type (Include Non-revenue Producing Units)	Col. 2 Number of Units	Contract Rents: Col. 3 Rent Per Unit	Contract Rents: Col. 4 Monthly Contract Rent Potential (Col. 2 x Col. 3)	Col. 5 Utility Allowances (Effective Date (mm/dd/yyyy) 11/01/2022)	Col. 6 Gross Rent (Col. 3 + Col. 5)	Market Rents (Sec. 236 Projects Only): Col. 7 Rent Per Unit	Market Rents (Sec. 236 Projects Only): Col. 8 Monthly Market Rent Potential (Col. 2 x Col. 7)
1 BR/Studio Quad	208	641	133.328	27	668		0
			0		0		0
			0		0		0
			0		0		0
			0		0		0
			0		0		0
			0		0		0
			0		0		0
			0		0		0
			0		0		0
			0		0		0
Total Units	208	Monthly Contract Rent Potential (Add Col. 4)*	$133.328			Monthly Market Rent Potential (Add Col. 8)*	$0
		Yearly Contract Rent Potential (Col. 4 Sum x 12)*	$1,599,936			Yearly Market Rent Potential (Col. 8 Sum x 12)*	$0

* These amounts may not exceed the Maximum Allowable Monthly Rent Potential approved on the last Rent Computation Worksheet or requested on the Worksheet you are now submitting. Market Rent Potential applies only to Section 236 Projects.

Part B – Items Included in Rent

Equipment/Furnishings in Unit (Check those included in rent.)

- [x] Range
- [x] Refrigerator
- [x] Air Conditioner
- [ ] Disposal
- [ ] Dishwasher
- [x] Carpet
- [x] Drapes
- [x] C/A Furn
- [ ] _____
- [ ] _____
- [ ] _____
- [ ] _____

Utilities **(Check those included in rent. For each item, (even those not included in rent), enter E, F, or G on line beside that item) E=electric; G=gas; F=fuel oil or coal.**

- [x] Heating E
- [x] Cooling E
- [x] Hot Water G
- [x] Cooking E
- [ ] Lights, etc. _____
- [x] Water/sewer

Services/Facilities (check those included in rent)

- [x] Parking
- [x] Laundry
- [ ] Swimming Pool
- [ ] Tennis Courts
- [x] Rec Room
- [ ] _____
- [ ] _____
- [ ] _____
- [ ] Nursing Care
- [ ] Linen/Maid Service
- [ ] _____
- [ ] _____

Part C – Charges in Addition to Rent (e.g., parking, cable TV, meals)

Purpose	Monthly Charge
	$
	$
	$
	$
	$
	$ 0

Part D – Non-Revenue Producing Space

Col. 1 Use	Col. 2 Unit Type	Col. 3 Contract Rent
Total Rent Loss Due to Non-Revenue Units		$ 0

Part E – Commercial Space (retail, offices, garages, etc.)

Col. 1 Use	Col. 2 Monthly Rent Potential	Col. 3 Square Footage	Col. 4 Rental Rate Per Sq. Ft. (Col. 2 divided by Col. 3)
	$ 0	Total Commercial Rent Potential	

Part F – Maximum Allowable Rent Potential

Enter Maximum Allowable Monthly Rent Potential From Rent Computation Worksheet (to be completed by HUD or lender) $

Part G – Information on Mortgagor Entity

Name of Entity

Northern Nevada Bldg & Const Trades Council Development Corp.

Type of Entity

☐ Individual ☐ General Partnership ☐ Joint Tenancy/Tenants in Common ☐ Other (specify)
☑ Corporation ☐ Limited Partnership ☐ Trust

List all Principals Comprising Mortgagor Entity: provide name and title of each principal. Use extra sheets, if needed. If mortgagor is a:
- corporation, list: (1) all officers; (2) all directors; and (3) each stockholder having a 10% or more interest.
- partnership, list: (1) all general partners; and (2) limited partners having a 25% or more interest in the partnership.
- trust, list: (1) all managers, directors or trustees and (2) each beneficiary having at least a 10% beneficial interest in the trust.

Name and Title

Russ James, President

Name and Title

Tracy Holland, Vice President

Name and Title

Rob Benner, Secretary - Treasurer

Name and Title

Name and Title

Name and Title

Name and Title

Name and Title

Name and Title

Name and Title

Part H – Owner Certification

To the best of my knowledge, all the information stated herein, as well as any information provided in the accompaniment herewith, is true and accurate.
Warning: HUD will prosecute false claims and statements. Conviction may result in criminal and/or civil penalties. (18 U.S.C. 1001, 1010, 1012; 31 U.S.C. 3729, 3802)

Name and Title	Authorized Official's Signature	Date (mm/dd/yyyy)
Rob Benner Secretary/Treasurer		8/15/22

Part I – HUD/Lender Approval

Addendum Number	Branch Chief/Lender Official Signature
	Date (mm/dd/yyyy)
HAP Contract Number	
Exhibit Number	Director, ~~Housing Management Division~~ Signature Contract Administrator
Loan Servicer Signature Date (mm/dd/yyyy)	Brenda Thornton 8/15/2022

ADDENDUM F. FLOOR PLANS



PERSPECTIVE

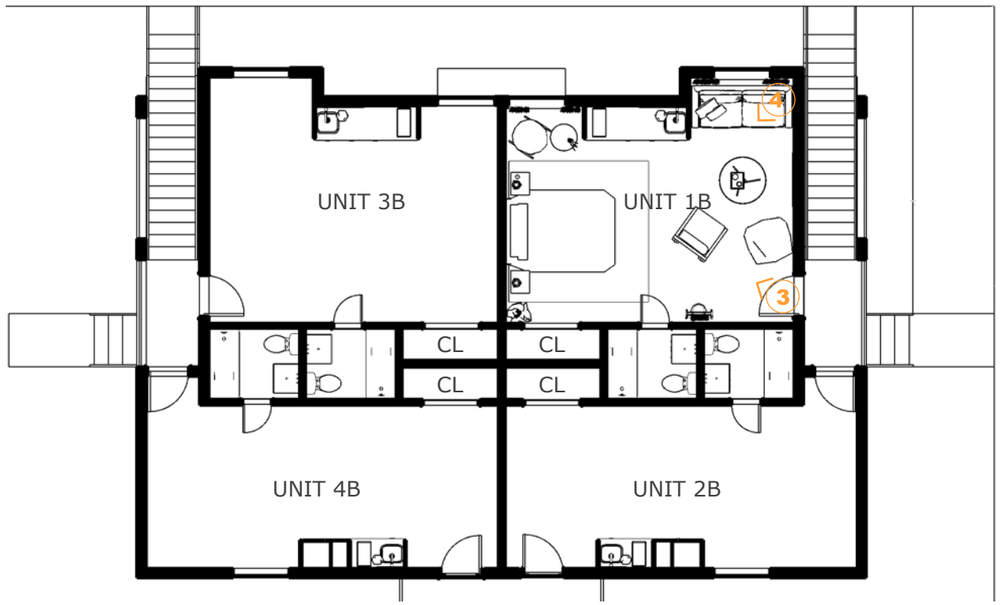

FLOOR PLAN LEVEL 2

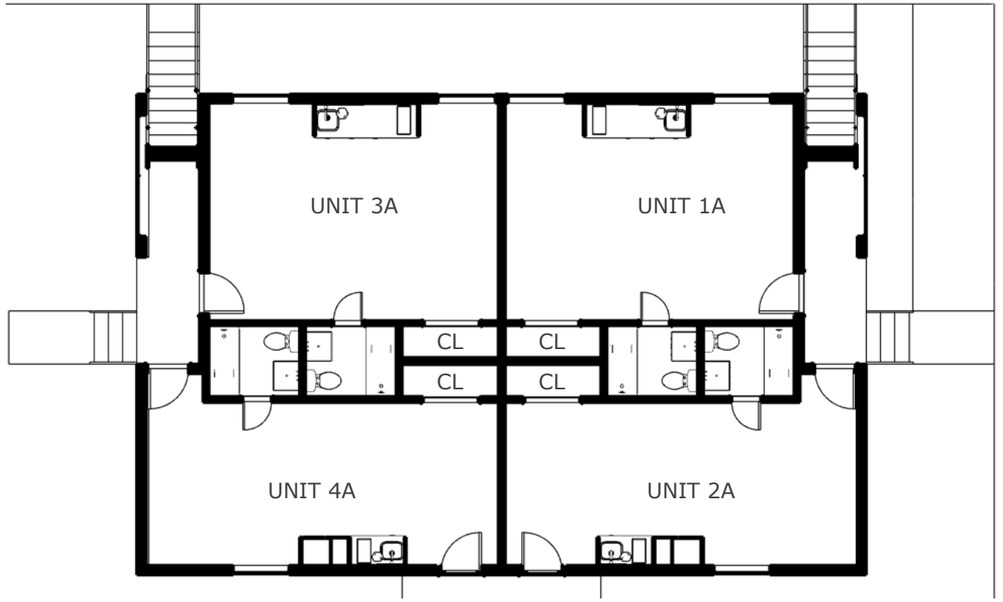

FLOOR PLAN LEVEL 1

PROPOSED ALTERNATE

SCALE: 3/32" = 1'-0"

ADDENDUM G. SCOPE OF RENOVATIONS

Uses

Carville Park Apts: Base Case
Integrity: OK
Signals: OK

	Tax Treatment	New-Rehab EB	Acquisition EB	Energy ITC	Total Development Cost (TDC)	TDC PU	TDC %
Acquisition Costs							
Existing Structures	Depreciated - RP	-	7,925,000	-	7,925,000	37,919	15.8%
Transaction Legal	Depreciated - RP	-	-	-	50,000	239	0.1%
Title	Depreciated - RP	-	-	-	7,925	38	0.0%
Acquisition Costs		-	7,925,000	-	7,982,925	38,196	15.9%
Hard Costs							
Systems: Air Handlers & Condensors	Depreciated - RP	914,375	-	-	914,375	4,375	1.8%
Systems: Hot Water Heaters	Depreciated - RP	78,375	-	-	78,375	375	0.2%
Systems: Electrical	Depreciated - RP	313,500	-	-	313,500	1,500	0.6%
Systems: Fire Sprinlker/Alarm	Depreciated - RP	709,660	-	-	709,660	3,396	1.4%
Systems: Seciurity/Alarm System	Depreciated - RP	75,000	-	-	75,000	359	0.1%
Exterior: Roofing, Gutters & Downspouts	Depreciated - RP	418,000	-	-	418,000	2,000	0.8%
Exterior: Entry Doors and Hardware	Depreciated - RP	250,800	-	-	250,800	1,200	0.5%
Exterior: Stariwells and Hand Rails	Depreciated - RP	156,750	-	-	156,750	750	0.3%
Exterior: Windows	Depreciated - RP	261,250	-	-	261,250	1,250	0.5%
Exterior: Sliders	Depreciated - RP	78,375	-	-	78,375	375	0.2%
Exterior: Stucco/Siding Replacement	Depreciated - RP	418,000	-	-	418,000	2,000	0.8%
Exterior: Exterior Prep and Paint	Depreciated - RP	250,800	-	-	250,800	1,200	0.5%
Exterior: Exterior Building & Unit Lighting	Depreciated - RP	85,650	-	-	85,650	410	0.2%
Exterior: Monument, Building & Unit Signage	Depreciated - RP	122,700	-	-	122,700	587	0.2%
Amenities: Leasing Office / Clubhouse	Depreciated - RP	745,875	-	-	745,875	3,569	1.5%
Amenities: Pool / Amenities	Depreciated - RP	50,000	-	-	50,000	239	0.1%
Amenities: Carport Structures (ITC Eligible)	Depreciated - RP	500,000	-	500,000	500,000	2,392	1.0%
Amenities: Solar Generation (ITC Eligible)	Depreciated - PP	1,452,474	-	1,452,474	1,452,474	6,950	2.9%
Furniture: Leasing Office	Depreciated - PP	75,000	-	-	75,000	359	0.1%
Furniture: Model Unit Staging	Depreciated - PP	10,000	-	-	10,000	48	0.0%
Furniture: Amenity Areas	Depreciated - PP	75,000	-	-	75,000	359	0.1%
Furniture: "Quad" Common Area	Depreciated - PP	75,000	-	-	75,000	359	0.1%
Interior: Common Kitchen- Appliances	Depreciated - PP	161,975	-	-	161,975	775	0.3%
Interior: Common Kitchen- Cabinets & Countertops	Depreciated - PP	261,250	-	-	261,250	1,250	0.5%
Interior: Common Kitchen- Plumbing	Depreciated - PP	52,250	-	-	52,250	250	0.1%
Interior: Common Kitchen- Electrical	Depreciated - PP	52,250	-	-	52,250	250	0.1%
Interior: Common Kitchen- Finishes	Depreciated - PP	52,250	-	-	52,250	250	0.1%
Interior: Kitchenette- Appliances	Depreciated - PP	209,000	-	-	209,000	1,000	0.4%
Interior: Kitchenette- Cabinets & Countertops	Depreciated - PP	522,500	-	-	522,500	2,500	1.0%
Interior: Kitchenette- Plumbing	Depreciated - PP	783,750	-	-	783,750	3,750	1.6%
Interior: Kitchenette- Electrical	Depreciated - RP	418,000	-	-	418,000	2,000	0.8%
Interior: Kitchenette- Finishes	Depreciated - RP	156,750	-	-	156,750	750	0.3%
Interior: Flooring- LVT	Depreciated - RP	496,762	-	-	496,762	2,377	1.0%
Interior: Doors, Baseboard & Trim	Depreciated - RP	496,762	-	-	496,762	2,377	1.0%
Interior: Prep & Paint	Depreciated - RP	212,898	-	-	212,898	1,019	0.4%
Interior: Electrical- Lighting	Depreciated - RP	209,000	-	-	209,000	1,000	0.4%
Interior: Electrical- Plugs & Switches	Depreciated - RP	209,000	-	-	209,000	1,000	0.4%
Interior: Bathroom- Cabinets & Countertops	Depreciated - RP	313,500	-	-	313,500	1,500	0.6%
Interior: Bathroom- Shower/Tub	Depreciated - RP	1,254,000	-	-	1,254,000	6,000	2.5%
Interior: Bathroom- Finishes	Depreciated - RP	209,000	-	-	209,000	1,000	0.4%
Interior: Bathroom- Plumbing	Depreciated - RP	360,525	-	-	360,525	1,725	0.7%
Interior: Bathroom- Finishes	Depreciated - RP	360,525	-	-	360,525	1,725	0.7%
Site Work: Landscaping	Depreciated - SW	100,000	-	-	100,000	478	0.2%
Site Work: Parking Lot	Depreciated - SW	75,000	-	-	75,000	359	0.1%
Site Work: Fencing/Access Gates	Depreciated - SW	100,000	-	-	100,000	478	0.2%
Studio Conversion Premium: 30.0%	Depreciated - RP	4,255,059	-	-	4,255,059	20,359	8.5%
GC Contingency: 6.5%	Depreciated - RP	921,929	-	-	921,929	4,411	1.8%
General Requirements: 6.0%	Depreciated - RP	1,161,631	-	117,148	1,161,631	5,558	2.3%
Builders General Overhead: 2.0%	Depreciated - RP	387,210	-	39,049	387,210	1,853	0.8%
Builders Profit: 6.0%	Depreciated - RP	1,161,631	-	117,148	1,161,631	5,558	2.3%
Subcontractor Default Insurance: 1.0%	Depreciated - RP	193,605	-	19,525	193,605	926	0.4%
Payment & Performance Bonds: 1.0%	Depreciated - RP	220,710	-	22,258	220,710	1,056	0.4%
Base Case Contingency: 10.0%	Depreciated - RP	2,248,531	-	226,760	2,248,531	10,759	4.5%
Hard Costs		24,733,838	-	2,494,363	24,733,838	118,344	49.2%
Soft Costs							
Architect Fee - Design	Depreciated - RP	250,000	-	25,000	250,000	1,196	0.5%
Architect Fee - Supervision	Depreciated - RP	57,000	-	5,700	57,000	273	0.1%
Engineering	Depreciated - RP	200,000	-	50,000	200,000	957	0.4%
Survey	Depreciated - RP	25,000	-	-	25,000	120	0.0%
Environmental	Depreciated - RP	25,000	-	-	25,000	120	0.0%
Housing Consultant	Depreciated - RP	60,000	-	-	60,000	287	0.1%
Appraisal	Depreciated - RP	12,500	-	-	12,500	60	0.0%
Market Study/RCS	Depreciated - RP	25,000	-	-	25,000	120	0.0%
Permits Fees	Depreciated - RP	50,000	-	10,000	50,000	239	0.1%
Zoning Fees	Depreciated - RP	45,000	-	10,000	90,000	431	0.2%
Legal (Construction)	Depreciated - RP	25,000	-	10,000	50,000	239	0.1%
Accounting Fees	Depreciated - RP	35,000	-	-	35,000	167	0.1%
Legal, Accounting & Other Synd	Amortized	25,000	-	-	25,000	120	0.0%
Inspections	Depreciated - RP	23,750	-	-	23,750	114	0.0%
Tax Credit Fees (Application, Reservation, Energy Audit)	Amortized	-	-	-	186,408	892	0.4%
Cost Certification	Depreciated - RP	20,000	-	5,000	20,000	96	0.0%
Capital Needs Assessment	Depreciated - RP	7,500	-	-	7,500	36	0.0%
Relocation	Depreciated - RP	1,613,675	-	-	1,613,675	7,721	3.2%
Lease-up/Start-up Costs	Expensed	-	-	-	25,000	120	0.0%
Marketing/Branding	Amortized	-	-	-	50,000	239	0.1%
Organizational Cost	Amortized	75,000	-	-	75,000	359	0.1%
Borrower/Buyer Counsel	Depreciated - RP	37,500	20,000	-	75,000	359	0.1%
Insurance	Depreciated - RP	31,350	-	-	31,350	150	0.1%
Soft Cost Contingency: 10.0%	Depreciated - RP	264,328	2,000	11,570	301,218	1,441	0.6%
Soft Costs		2,907,603	22,000	127,270	3,313,401	15,854	6.6%
Financing Costs							
Constr: Construction Loan Origination Fees	Depreciated - RP	376,875	-	-	376,875	1,803	0.7%
Constr: Other Costs & Fees	Depreciated - RP	100,000	-	-	100,000	478	0.2%
Constr: Loan Interest calc.: $4,982,337	Depreciated - RP	4,694,181	-	-	4,982,337	23,839	9.9%
TE Bond: Issuance Costs	Depreciated - RP	-	-	-	603,000	2,885	1.2%
TE Bond: Trustee Fees & Other Costs	Amortized	-	-	-	50,000	239	0.1%
221(d)(4): Application Fee (3 bps of loan)	Amortized	-	-	-	60,450	289	0.1%
221(d)(4): Inspection Fee (5 bps of rehab cost)	Amortized	-	-	-	123,669	592	0.2%
Soft Debt: Other Costs & Fees	Amortized	-	-	-	20,000	96	0.0%
TC Equity: Syndicator Legal & Due Diligence	None	-	-	-	75,000	359	0.1%
Financing Costs		5,171,056	-	-	6,391,331	30,581	12.7%
NWC							
Operating Deficit Reserve: $1,209,908 calc.	None	-	-	-	1,209,908	5,789	2.4%
Debt Service Reserve: $133,302	None	-	-	-	150,202	719	0.3%
Unrestricted Operating Cash	None	-	-	-	150,000	718	0.3%
NWC		-	-	-	1,510,110	7,225	3.0%
Developer Profit							
Base Developer Fee	Depreciated - RP	4,921,874	1,192,050	393,245	6,113,924	29,253	12.2%
Ineligible Developer Fee	Depreciated - RP	-	-	-	249,300	1,193	0.5%
Developer Profit		4,921,874	1,192,050	393,245	6,363,224	30,446	12.7%
TOTAL DEVELOPMENT USES		**37,734,371**	**9,139,050**	**3,014,878**	**50,294,830**	**240,645**	**100.0%**

Sources

Carville Park Apts: Base Case
Integrity: OK
Signals: OK

HUD 221(d)(4)	20,150,000	96,411	40.10%
HOME AHMLP LT Note	50,000	239	0.10%
Hard Debt	20,200,000	96,651	40.20%
Soft Debt			
Deferred Developer Fee	954,484	4,567	1.90%
NV Infrastructure Bank LT Note	3,000,000	14,354	5.97%
BCTCNN LT Note	40,000	191	0.08%
Soft Debt	3,994,484	19,112	7.95%
Grants and Contributions			
Equity			
LP: Fed. LIHTC	21,326,046	102,038	42.44%
GP: Developer	100	0	0.00%
LP: NV LIHTC	2,700,000	12,919	5.37%
SLP: Non-Profit	100	0	0.00%
Equity	24,026,246	114,958	47.81%
Operating Cash Flow			
Cash flow from Operation	724,352	3,466	1.44%
Interest Earning on Upfront Loan	1,259,375	6,026	2.51%
Operating Cash Flow	1,983,727	9,492	3.95%
TOTAL SOURCES	**50,204,456**	**240,213**	**100.0%**

EXHIBIT 1B

COSTAR UNDERWRITING REPORT



Underwriting Report

1244 Carville Dr

Carville Park Apartments

208 Unit Apartment Building

Reno, Nevada - Northeast Reno Neighborhood

PREPARED BY

MERCHANTS CAPITAL

Blake Barile

MCC Credit Analyst

SUBJECT PROPERTY

Property Details 1

RENT COMPS

Map & List 4
Photo Comparison 6
Rent Comps Details 7
Unit Mix Summary 14
Ranking Chart By Bedroom 15
Changes in Rent Comps 16
Rent Trend Charts 18
RentTrend Data 23

CONSTRUCTION

Overall Construction Map & Summary 25
Under Construction Map & List 26
Under Construction Details 28
Deliveries Past 12 Months Map & List 31
Delivered Property Details 33
Construction Summary 42

SALE COMPS

Map & List 48
Sale Comp Details 50
Sales Volume 58
Sales Pricing 59
Cap Rates 61
Top Buyers & Sellers 62

DEMOGRAPHICS

Overview 65
Age & Education 66
Ethnicity 67

MULTI-FAMILY SUBMARKET REPORT

Submarket Key Statistics 69
Vacancy 70
Rent 72
Construction 74

© 2023 CoStar Group - Licensed to Merchants Capital - 1108535

Sales	77
Sales Past 12 Months	79
Supply & Demand Trends	81
Vacancy & Rent	83
Sale Trends	85
Deliveries & Under Construction	87

MULTI-FAMILY MARKET REPORT

Market Key Statistics	89
Vacancy	90
Rent	93
Construction	96
Under Construction Properties	97
Sales	99
Sales Past 12 Months	101
Economy	103
Market Submarkets	108
Supply & Demand Trends	110
Vacancy & Rent	112
Sale Trends	114
Deliveries & Under Construction	116

© 2023 CoStar Group - Licensed to Merchants Capital - 1108535

Subject Property

1244 Carville Dr - Carville Park Apartments

Reno, Nevada - Northeast Reno Neighborhood



PROPERTY	
No. of Units:	208
Stories:	2
Avg. Unit Size:	366 SF
Type:	Apartments - All
Rent Type:	Affordable
Year Built:	1979
Parking:	-
Distance to Transit:	-

PROPERTY MANAGER
Carville Park Apartments
(775) 323-7443

OWNER
Building & Construction Trade Council Of...

ASKING RENTS PER UNIT/SF		
Current:	$668	$1.82 /SF
Last Quarter:	$667	$1.82 /SF
Year Ago:	$660	$1.80 /SF
Competitors:	$1,077	$1.28 /SF
Submarket:	$1,422	$1.69 /SF

VACANCY		
Current:	3.9%	8 Units
Last Quarter:	3.9%	8 Units
Year Ago:	1.9%	4 Units
Competitors:	2.9%	31 Units
Submarket:	6.0%	628 Units

12 MONTH ABSORPTION	
Current:	(5) Units
Competitor Total:	(23) Units
Competitor Avg:	(3.8) Units
Submarket Total:	198 Units
Submarket Avg:	0.9 Units

UNIT BREAKDOWN

			Unit Mix		Availability		Avg Asking Rent		Avg Effective Rent		
Bed	Bath	Avg SF	Units	Mix %	Units	Mix %	Per Unit	Per SF	Per Unit	Per SF	Concessions
1	1	366	208	100%	0	0.0%	$668	$1.82	$664	$1.81	0.5%
Totals		Avg SF	Units	Mix %	Units	Mix %	Per Unit	Per SF	Per Unit	Per SF	Concessions
All 1 Beds		366	208	100%	0	0.0%	$668	$1.82	$664	$1.81	0.5%
Totals		366	208	100%	0	0.0%	$668	$1.82	$664	$1.81	0.5%

Estimate Updated January 28, 2023

SITE AMENITIES

Clubhouse	Laundry Facilities	Picnic Area
Security System		

UNIT AMENITIES

Air Conditioning	Balcony

RECURRING EXPENSES

Free Water, Sewer

PET POLICY

Dog Allowed 1 Maximum
Cat Allowed 1 Maximum

© 2023 CoStar Group - Licensed to Merchants Capital - 1108535

Subject Property



Primary



Building

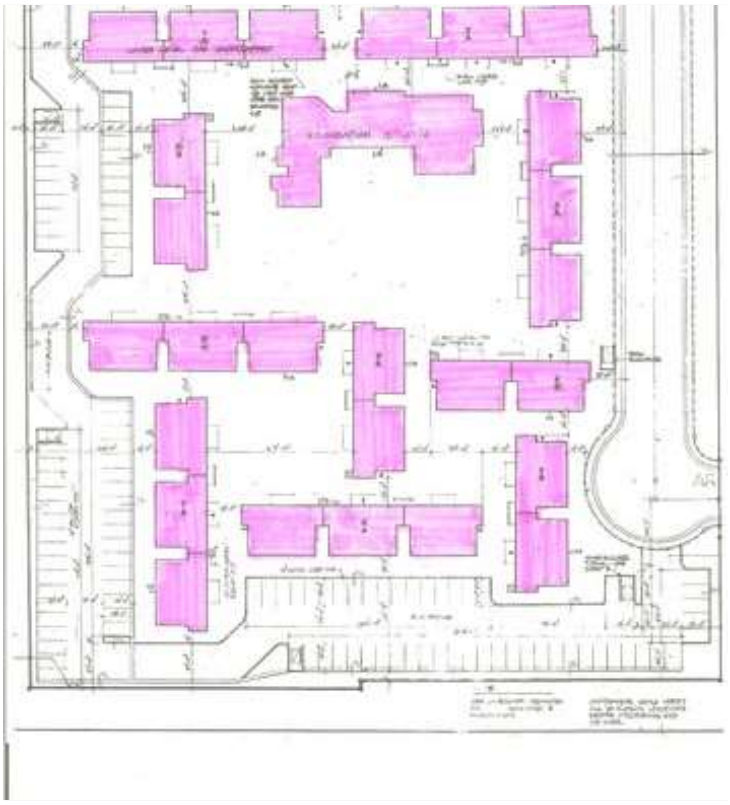

Site Plan

© 2023 CoStar Group - Licensed to Merchants Capital - 1108535



Rent Comparables

1244 Carville Dr

Carville Park Apartments

208 Unit Apartment Building

Reno, Nevada - Northeast Reno Neighborhood

PREPARED BY

MERCHANTS CAPITAL

Blake Barile

MCC Credit Analyst

Rent Comparables Summary

1244 Carville Dr - Carville Park Apartments

No. Rent Comps	Avg. Rent Per Unit	Avg. Rent Per SF	Avg. Vacancy Rate
6	$1,077	$1.28	2.9%

RENT COMP LOCATIONS

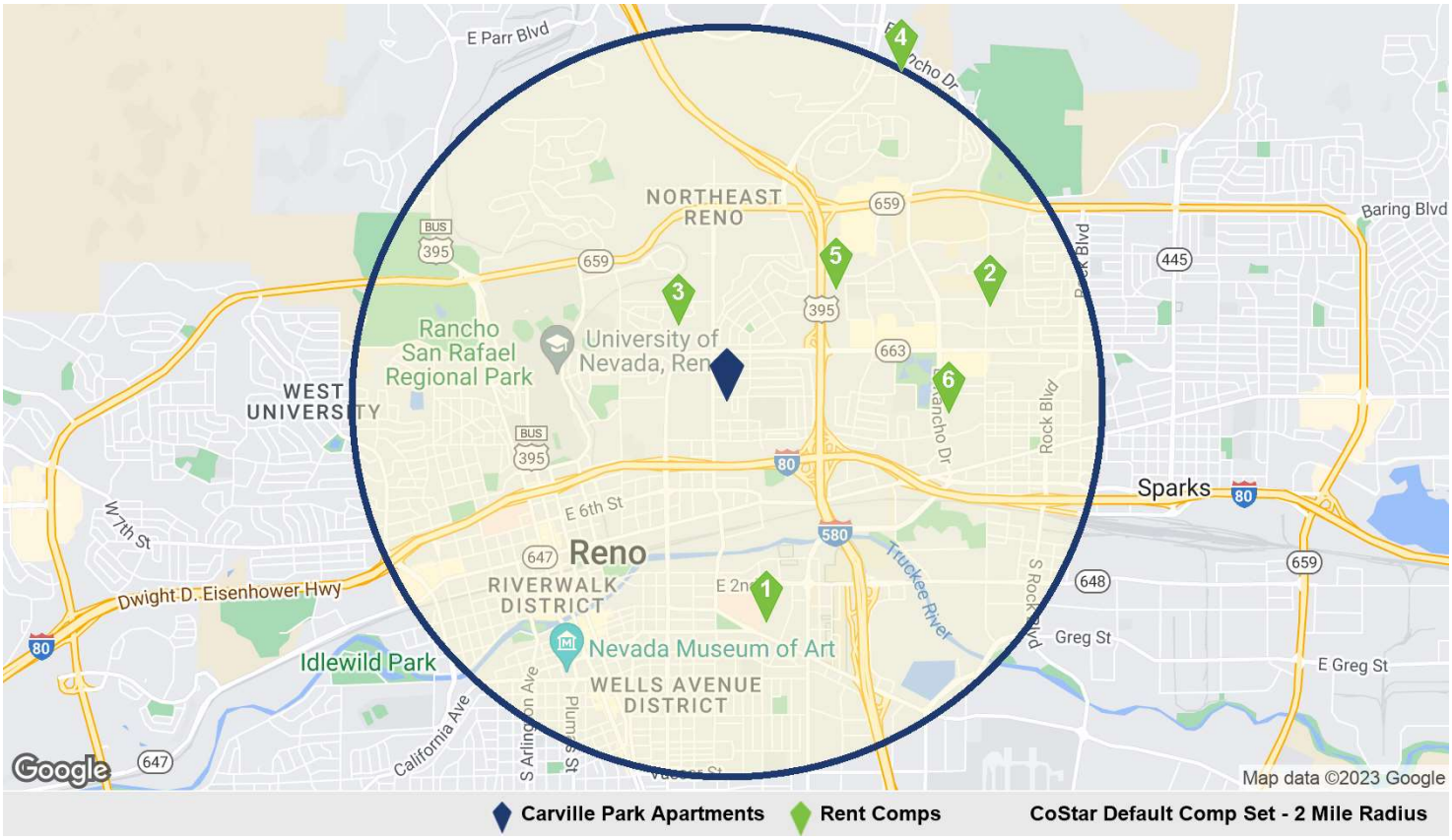

RENT COMPS SUMMARY STATISTICS

Unit Breakdown	Low	Average	Median	High
Total Units	115	181	155	288
Studio Units	0	10	0	59
One Bedroom Units	0	46	52	72
Two Bedroom Units	0	76	66	216
Three Bedroom Units	0	41	20	140

Property Attributes	Low	Average	Median	High
Year Built	1970	1983	1984	1999
Number of Floors	2	2	2	3
Average Unit Size SF	531	839	791	1,024
Vacancy Rate	0.5%	2.9%	2.9%	6.8%
Star Rating	★★☆☆☆	★★☆☆☆ 2.2	★★☆☆☆	★★★☆☆

© 2023 CoStar Group - Licensed to Merchants Capital - 1108535

Rent Comparables Summary

1244 Carville Dr - Carville Park Apartments

	Property Name/Address	Rating	Yr Built	Property Size		Asking Rent Per Month Per Unit				
				Units	Avg Unit SF	Studio	1 Bed	2 Bed	3 Bed	Rent/SF
◆	Carville Park Apartments 1244 Carville Dr	★★☆☆☆	1979	208	366	-	$668	-	-	$1.82
1	Washoe Mills Apartments 1375 Mill St	★★☆☆☆	1981	115	531	$936	$999	-	-	$1.82
2	Parkside Gardens 1800 Sullivan Ln	★★☆☆☆	1987	288	843	-	$992	$1,191	-	$1.35
3	Silver Terrace 1611 Wedekind Rd	★★☆☆☆	1970	126	1,000	-	-	$1,200	$1,397	$1.31
4	Boulder Creek Apartments 4005 Moorpark Ct	★★☆☆☆	1999	250	1,024	-	$988	$985	$1,371	$1.28
5	Community Garden Apart… 2330 Wedekind Rd	★★☆☆☆	1971	181	739	-	$670	$778	$995	$1.06
6	Banbridge 1000 El Rancho Dr	★★★☆☆	1989	128	726	-	$502	$913	-	$1.05

© 2023 CoStar Group - Licensed to Merchants Capital - 1108535

Rent Comparables Photo Comparison

Subject Property



Carville Park Apartments

1244 Carville Dr
208 Units / 2 Stories
Rent/SF $1.82, Vacancy 3.9%
Owner: Building & Construction Trad…



1 Washoe Mills Apartments

1375 Mill St
115 Units / 3 Stories
Rent/SF $1.82, Vacancy 3.5%
Owner: Vitus Group



2 Parkside Gardens

1800 Sullivan Ln
288 Units / 2 Stories
Rent/SF $1.35, Vacancy 2.8%
Owner: PacifiCap Properties Group



3 Silver Terrace

1611 Wedekind Rd
126 Units / 2 Stories
Rent/SF $1.31, Vacancy 7.1%
Owner: Integra Property Group



4 Boulder Creek Apartments

4005 Moorpark Ct
250 Units / 3 Stories
Rent/SF $1.28, Vacancy 0.4%
Owner: Mark Abrahams



5 Community Garden Apartm…

2330 Wedekind Rd
181 Units / 2 Stories
Rent/SF $1.06, Vacancy 2.8%
Owner: Western Region Non Profit H…



6 Banbridge

1000 El Rancho Dr
128 Units / 2 Stories
Rent/SF $1.05, Vacancy 2.3%
Owner: Peak Capital Partners

© 2023 CoStar Group - Licensed to Merchants Capital - 1108535

Rent Comparables

1 1375 Mill St - Washoe Mills Apartments

Reno, Nevada - Washoe Regional Center Neighborhood



PROPERTY	
Property Size:	115 Units, 3 Floors
Avg. Unit Size:	531 SF
Year Built:	1981
Type:	Apartments - All
Rent Type:	Affordable
Parking:	28 Spaces; 0.2 per Unit
Distance to Subject:	1.20 Miles
Distance to Transit:	-

PROPERTY MANAGER

FPI - Washoe Mill Apartments

(775) 323-4299

OWNER

Purchased Jan 2011

$7,600,000 ($66,087/Unit)

UNIT BREAKDOWN

			Unit Mix		Availability		Avg Asking Rent		Avg Effective Rent		
Bed	Bath	Avg SF	Units	Mix %	Units	Mix %	Per Unit	Per SF	Per Unit	Per SF	Concessions
Studio	1	468	59	51.3%	0	0.0%	$936	$2.00	$930	$1.99	0.7%
1	1	598	56	48.7%	0	0.0%	$999	$1.67	$995	$1.66	0.4%

Totals	Avg SF	Units	Mix %	Units	Mix %	Per Unit	Per SF	Per Unit	Per SF	Concessions
All Studios	468	59	51.3%	0	0.0%	$936	$2.00	$930	$1.99	0.7%
All 1 Beds	598	56	48.7%	0	0.0%	$999	$1.67	$995	$1.66	0.4%
Totals	531	115	100%	0	0.0%	$967	$1.82	$962	$1.81	0.5%

Estimate Updated January 28, 2023

UNIT AMENITIES

Kitchen, Oven, Range

© 2023 CoStar Group - Licensed to Merchants Capital - 1108535

Rent Comparables

2 1800 Sullivan Ln - Parkside Gardens

Sparks, Nevada - Outer Sparks Neighborhood



PROPERTY	
Property Size:	288 Units, 2 Floors
Avg. Unit Size:	843 SF
Year Built:	1987
Type:	Apartments - All
Rent Type:	Affordable
Parking:	-
Distance to Subject:	1.49 Miles
Distance to Transit:	-

PROPERTY MANAGER

Pacificap - Parkside Gardens

(775) 359-5555

OWNER

-

UNIT BREAKDOWN

			Unit Mix		Availability		Avg Asking Rent		Avg Effective Rent		
Bed	Bath	Avg SF	Units	Mix %	Units	Mix %	Per Unit	Per SF	Per Unit	Per SF	Concessions
1	1	700	72	25.0%	0	0.0%	$992	$1.42	$992	$1.42	0.0%
2	1	860	120	41.7%	0	0.0%	$1,191	$1.38	$1,191	$1.38	0.0%
2	2	930	96	33.3%	0	0.0%	$1,191	$1.28	$1,191	$1.28	0.0%

Totals	Avg SF	Units	Mix %	Units	Mix %	Per Unit	Per SF	Per Unit	Per SF	Concessions
All 1 Beds	700	72	25.0%	0	0.0%	$992	$1.42	$992	$1.42	0.0%
All 2 Beds	891	216	75.0%	0	0.0%	$1,191	$1.34	$1,191	$1.34	0.0%
Totals	843	288	100%	0	0.0%	$1,141	$1.35	$1,141	$1.35	0.0%

Estimate Updated January 28, 2023

SITE AMENITIES

24 Hour Access, Clubhouse, Fitness Center, Laundry Facilities, Maintenance on site, Playground, Pool, Public Transportation

UNIT AMENITIES

Air Conditioning, Freezer, Heating, Kitchen, Oven, Refrigerator, Tub/Shower

RECURRING EXPENSES

Dog Rent $35 | Cat Rent $35 | Free Water, Trash Removal, Sewer

ONE TIME EXPENSES

Dog Deposit $300 | Cat Deposit $300 | Application Fee $25

PET POLICY

Dog Allowed $300 Deposit, $35/Mo, 2 Maximum, 25 lb. Maximum
Cat Allowed $300 Deposit, $35/Mo, 2 Maximum
Bird Allowed
Fish Allowed
Reptile Allowed
Other Allowed

© 2023 CoStar Group - Licensed to Merchants Capital - 1108535

Rent Comparables

3 1611 Wedekind Rd - Silver Terrace

Reno, Nevada - West University Neighborhood



PROPERTY	
Property Size:	126 Units, 2 Floors
Avg. Unit Size:	1,000 SF
Year Built:	1970
Type:	Apartments - All
Rent Type:	Affordable
Parking:	264 Spaces; 2.1 per Unit
Distance to Subject:	0.47 Miles
Distance to Transit:	-

PROPERTY MANAGER

Pacificap - Silver Terrace & Centennial Park

-

OWNER

Purchased Jan 2020

$16,525,000 ($131,151/Unit) - Part of Portfoli

UNIT BREAKDOWN

			Unit Mix		Availability		Avg Asking Rent		Avg Effective Rent		
Bed	Bath	Avg SF	Units	Mix %	Units	Mix %	Per Unit	Per SF	Per Unit	Per SF	Concessions
2	2	840	59	46.8%	0	0.0%	$1,200	$1.43	$1,191	$1.42	0.7%
3	2	1,140	67	53.2%	0	0.0%	$1,397	$1.23	$1,386	$1.22	0.8%

Totals	Avg SF	Units	Mix %	Units	Mix %	Per Unit	Per SF	Per Unit	Per SF	Concessions
All 2 Beds	840	59	46.8%	0	0.0%	$1,200	$1.43	$1,191	$1.42	0.7%
All 3 Beds	1,140	67	53.2%	0	0.0%	$1,397	$1.23	$1,386	$1.22	0.8%
Totals	1,000	126	100%	0	0.0%	$1,305	$1.31	$1,295	$1.30	0.8%

Estimate Updated January 28, 2023

SITE AMENITIES

Laundry Facilities, Playground, Property Manager on Site

UNIT AMENITIES

Air Conditioning, Balcony, Carpet, Ceiling Fans, Heating, Kitchen, Oven, Patio, Range, Refrigerator

RECURRING EXPENSES

Free Water, Heat, Trash Removal, Sewer

ONE TIME EXPENSES

Application Fee $30

© 2023 CoStar Group - Licensed to Merchants Capital - 1108535

Rent Comparables

4 4005 Moorpark Ct - Boulder Creek Apartments

Sparks, Nevada - Outer North Valleys Neighborhood



PROPERTY	
Property Size:	250 Units, 3 Floors
Avg. Unit Size:	1,024 SF
Year Built:	1999 Renov 2013
Type:	Apartments - All
Rent Type:	Affordable
Parking:	264 Spaces; 1.1 per Unit
Distance to Subject:	1.98 Miles
Distance to Transit:	-

PROPERTY MANAGER

Avenue5 - Boulder Creek Apartments

(775) 674-1616

OWNER

Purchased Aug 2022

$52,250,000 ($209,000/Unit)

UNIT BREAKDOWN

			Unit Mix		Availability		Avg Asking Rent		Avg Effective Rent		
Bed	Bath	Avg SF	Units	Mix %	Units	Mix %	Per Unit	Per SF	Per Unit	Per SF	Concessions
1	1	636	30	12.0%	0	0.0%	$988	$1.55	$986	$1.55	0.3%
2	2	893	30	12.0%	0	0.0%	$985	$1.10	$983	$1.10	0.3%
3	2	1,058	140	56.0%	0	0.0%	$1,371	$1.30	$1,367	$1.29	0.3%
4	2	1,238	50	20.0%	0	0.0%	$1,536	$1.24	$1,532	$1.24	0.3%

Totals	Avg SF	Units	Mix %	Units	Mix %	Per Unit	Per SF	Per Unit	Per SF	Concessions
All 1 Beds	636	30	12.0%	0	0.0%	$988	$1.55	$986	$1.55	0.3%
All 2 Beds	893	30	12.0%	0	0.0%	$985	$1.10	$983	$1.10	0.3%
All 3 Beds	1,058	140	56.0%	0	0.0%	$1,371	$1.30	$1,367	$1.29	0.3%
All 4 Beds	1,238	50	20.0%	0	0.0%	$1,536	$1.24	$1,532	$1.24	0.3%
Totals	1,024	250	100%	0	0.0%	$1,312	$1.28	$1,308	$1.28	0.3%

Estimate Updated February 05, 2023

SITE AMENITIES

Fitness Center, Grill, Laundry Facilities, Picnic Area, Playground

UNIT AMENITIES

Air Conditioning, Balcony, Dishwasher, Eat-in Kitchen, Heating, Kitchen, Microwave, Refrigerator, Storage Space, Walk-In Closets, Washer/Dryer, Wheelchair Accessible (Rooms)

RECURRING EXPENSES

Free Dog Rent	Free Cat Rent	Free Assigned Covered Parking
Free Unassigned Covered Parking	Free Unassigned Surface Lot Parking	Free Water, Trash Removal, Sewer

ONE TIME EXPENSES

Application Fee $30

© 2023 CoStar Group - Licensed to Merchants Capital - 1108535

PET POLICY

Dog Allowed 2 Maximum, 50 lb. Maximum
Cat Allowed 2 Maximum
Fish Allowed
Restrictions: Aquarium tank limits may apply
Reptile Allowed
Restrictions: Restrictions may apply

© 2023 CoStar Group - Licensed to Merchants Capital - 1108535

Rent Comparables

5 2330 Wedekind Rd - Community Garden Apartments

Reno, Nevada - Northeast Reno Neighborhood



PROPERTY	
Property Size:	181 Units, 2 Floors
Avg. Unit Size:	739 SF
Year Built:	1971 Renov 1981
Type:	Apartments - All
Rent Type:	Affordable
Parking:	232 Spaces; 1.3 per Unit
Distance to Subject:	0.83 Miles
Distance to Transit:	-

PROPERTY MANAGER

Pacific Cap - Community Garden

(775) 358-5907

OWNER

-

UNIT BREAKDOWN

			Unit Mix		Availability		Avg Asking Rent		Avg Effective Rent		
Bed	Bath	Avg SF	Units	Mix %	Units	Mix %	Per Unit	Per SF	Per Unit	Per SF	Concessions
1	1	625	69	38.1%	0	0.0%	$670	$1.07	$667	$1.07	0.4%
2	1	741	72	39.8%	0	0.0%	$778	$1.05	$774	$1.04	0.5%
3	1	931	40	22.1%	0	0.0%	$995	$1.07	$990	$1.06	0.5%

Totals	Avg SF	Units	Mix %	Units	Mix %	Per Unit	Per SF	Per Unit	Per SF	Concessions
All 1 Beds	625	69	38.1%	0	0.0%	$670	$1.07	$667	$1.07	0.4%
All 2 Beds	741	72	39.8%	0	0.0%	$778	$1.05	$774	$1.04	0.5%
All 3 Beds	931	40	22.1%	0	0.0%	$995	$1.07	$990	$1.06	0.5%
Totals	739	181	100%	0	0.0%	$785	$1.06	$781	$1.06	0.5%

Estimate Updated January 28, 2023

SITE AMENITIES

Laundry Facilities

UNIT AMENITIES

Disposal, Heating, Kitchen, Range, Refrigerator

RECURRING EXPENSES

Free Water, Heat, Trash Removal, Sewer

PET POLICY

No Pets Allowed

© 2023 CoStar Group - Licensed to Merchants Capital - 1108535

Rent Comparables

6 1000 El Rancho Dr - Banbridge

Sparks, Nevada - Downtown Sparks Neighborhood

★★★☆☆



PROPERTY	
Property Size:	128 Units, 2 Floors
Avg. Unit Size:	726 SF
Year Built:	1989 Renov 2016
Type:	Apartments - All
Rent Type:	Affordable
Parking:	74 Spaces; 0.6 per Unit
Distance to Subject:	1.18 Miles
Distance to Transit:	-

PROPERTY MANAGER

Peak Living - Banbridge

(775) 331-7170

OWNER

Purchased Oct 2022

$13,000,000 ($101,563/Unit)

UNIT BREAKDOWN

			Unit Mix		Availability		Avg Asking Rent		Avg Effective Rent		
Bed	Bath	Avg SF	Units	Mix %	Units	Mix %	Per Unit	Per SF	Per Unit	Per SF	Concessions
1	1	592	48	37.5%	3	6.3%	$502	$0.85	$500	$0.84	0.5%
2	2	745	40	31.3%	3	7.5%	$632	$0.85	$629	$0.84	0.4%
2	2	867	40	31.3%	2	5.0%	$1,195	$1.38	$1,189	$1.37	0.4%

Totals	Avg SF	Units	Mix %	Units	Mix %	Per Unit	Per SF	Per Unit	Per SF	Concessions
All 1 Beds	592	48	37.5%	3	6.3%	$502	$0.85	$500	$0.84	0.5%
All 2 Beds	806	80	62.5%	5	6.3%	$913	$1.13	$909	$1.13	0.4%
Totals	726	128	100%	8	6.3%	$759	$1.05	$756	$1.04	0.4%

Estimate Updated January 28, 2023

SITE AMENITIES

Basketball Court, Business Center, Clubhouse, Fitness Center, Grill, Picnic Area, Playground, Wi-Fi

UNIT AMENITIES

Air Conditioning, Cable Ready, Dishwasher, Disposal, Heating, Kitchen, Refrigerator, Walk-In Closets, Wheelchair Accessible (Rooms), Window Coverings

RECURRING EXPENSES

Free Dog Rent	Free Cat Rent	Fish Rent $25
Free Unassigned Covered Parking	Free Water, Trash Removal, Sewer	

ONE TIME EXPENSES

Fish Deposit $200	Application Fee $24

PET POLICY

Dog Allowed 2 Maximum
Non-aggressive breeds accepted. No weight limit. Please see the office for details!
Cat Allowed 2 Maximum
Non-aggressive breeds accepted. No weight limit. Please see the office for details!
Fish Allowed $200 Deposit, $25/Mo, 2 Maximum
Restrictions: Breed restrictions may aply

© 2023 CoStar Group - Licensed to Merchants Capital - 1108535

Rent Comparables by Bedroom

1244 Carville Dr - Carville Park Apartments

Studio Comps	One Bed Comps	Two Bed Comps	Three Bed Comps
$936	$827	$1,065	$1,317
Subject	Subject	Subject	Subject
-	$668	-	-

Current Conditions in Rent Comps	Studio	1 Bedroom	2 Bedroom	3 Bedroom
Total Number of Units	59	275	457	247
Vacancy Rate	5.3%	2.4%	3.1%	2.8%
Asking Rent Per Unit	$936	$827	$1,065	$1,317
Asking Rent Per SF	$2.00	$1.30	$1.26	$1.24
Effective Rents Per Unit	$930	$825	$1,062	$1,311
Effective Rents Per SF	$1.99	$1.30	$1.26	$1.24
Concessions	0.7%	0.3%	0.2%	0.5%
Changes Past Year in Rent Comps	**Studio**	**1 Bedroom**	**2 Bedroom**	**3 Bedroom**
Year-Over-Year Effective Rent Growth	1.1%	3.3%	4.5%	52.2%
Year-Over-Year Vacancy Rate Change	1.4%	2.0%	2.4%	1.2%
12 Month Absorption in Units	-1	-6	-11	-4

EXISTING UNITS

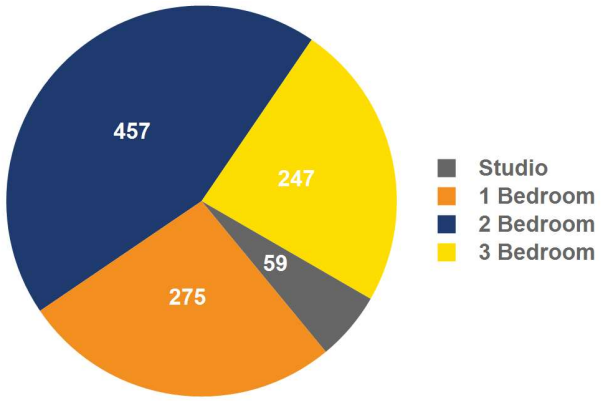

VACANT UNITS

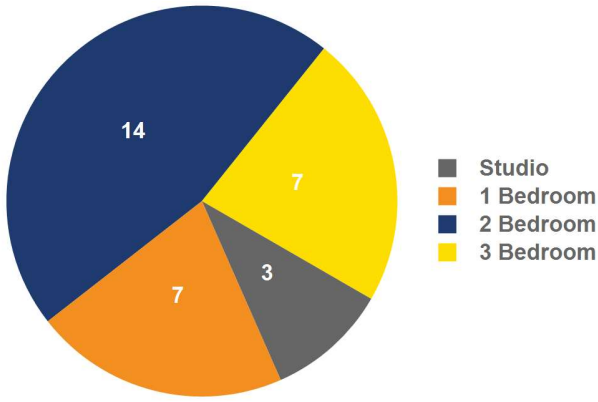

ASKING RENT PER UNIT PER MONTH

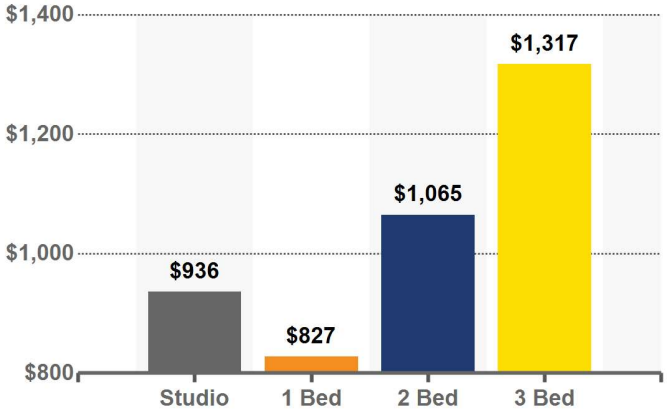

12 MONTH ABSORPTION IN UNITS

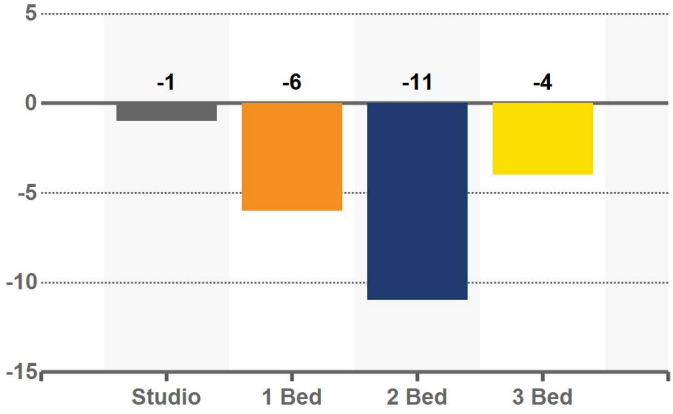

© 2023 CoStar Group - Licensed to Merchants Capital - 1108535

One Bedroom Rent Comparables

1244 Carville Dr - Carville Park Apartments

Property Name/Address	Rating	One Bedroom Rent Per Unit	Rent/SF	Change in Rent Quarter	Change in Rent Year
Washoe Mills Apartments 1375 Mill St	★★☆☆☆	$999	$1.67	0.1%	1.2%
Parkside Gardens 1800 Sullivan Ln	★★☆☆☆	$992	$1.42	0.1%	0.9%
Boulder Creek Apartments 4005 Moorpark Ct	★★☆☆☆	$988	$1.55	0.1%	9.1%
Community Garden Apartments 2330 Wedekind Rd	★★☆☆☆	$670	$1.07	0.1%	1.2%
Carville Park Apartments 1244 Carville Dr	★★☆☆☆	$668	$1.82	0.1%	1.2%
Banbridge 1000 El Rancho Dr	★★★☆☆	$502	$0.85	0.2%	13.6%

$0 $350 $700 $1,050 $1,400

© 2023 CoStar Group - Licensed to Merchants Capital - 1108535

Changes in Rent Comparables

1244 Carville Dr - Carville Park Apartments

VACANCY CHANGES PAST QUARTER & YEAR

			Vacancy Levels			Change	
Property Name - Address	Rating	Units	Now	Last Qtr	Last Year	Past Qtr	Past Year
Parkside Gardens - 1800 Sullivan Ln	★★☆☆☆	288	2.9%	2.9%	0%	0%	2.9%
Banbridge - 1000 El Rancho Dr	★★★☆☆	128	2.7%	2.5%	0%	0.1%	2.7%
Carville Park Apartments 1244 Carville Dr	★★☆☆☆	208	3.9%	3.7%	2.1%	0.1%	1.7%
Community Garden Apartments - 2330 Wedekin...	★★☆☆☆	181	2.9%	2.7%	1.0%	0.1%	1.8%
Washoe Mills Apartments - 1375 Mill St	★★☆☆☆	115	3.9%	3.7%	2.3%	0.2%	1.6%
Silver Terrace - 1611 Wedekind Rd	★★☆☆☆	126	6.8%	6.7%	4.8%	0.2%	2.0%
Boulder Creek Apartments - 4005 Moorpark Ct	★★☆☆☆	250	0.5%	0.3%	0%	0.2%	0.5%

ASKING RENT CHANGES PAST QUARTER & YEAR - STUDIO

			Rents Levels			Change	
Property Name - Address	Rating	Units	Now	Last Qtr	Last Year	Past Qtr	Past Year
Washoe Mills Apartments - 1375 Mill St	★★☆☆☆	59	$936	$935	$925	0.1%	1.2%

ASKING RENT CHANGES PAST QUARTER & YEAR - ONE BEDROOM

			Rents Levels			Change	
Property Name - Address	Rating	Units	Now	Last Qtr	Last Year	Past Qtr	Past Year
Carville Park Apartments 1244 Carville Dr	★★☆☆☆	208	$668	$667	$660	0.1%	1.2%
Community Garden Apartments - 2330 Wedekin...	★★☆☆☆	69	$670	$669	$662	0.1%	1.2%
Boulder Creek Apartments - 4005 Moorpark Ct	★★☆☆☆	30	$988	$988	$906	0.1%	9.1%
Washoe Mills Apartments - 1375 Mill St	★★☆☆☆	56	$999	$999	$988	0.1%	1.2%
Parkside Gardens - 1800 Sullivan Ln	★★☆☆☆	72	$992	$991	$983	0.1%	0.9%
Banbridge - 1000 El Rancho Dr	★★★☆☆	48	$502	$501	$442	0.2%	13.6%

ASKING RENT CHANGES PAST QUARTER & YEAR - TWO BEDROOM

			Rents Levels			Change	
Property Name - Address	Rating	Units	Now	Last Qtr	Last Year	Past Qtr	Past Year
Boulder Creek Apartments - 4005 Moorpark Ct	★★☆☆☆	30	$985	$985	$895	0.1%	10.1%
Community Garden Apartments - 2330 Wedekin...	★★☆☆☆	72	$778	$777	$769	0.1%	1.2%
Silver Terrace - 1611 Wedekind Rd	★★☆☆☆	59	$1,200	$1,199	$1,186	0.1%	1.2%
Banbridge - 1000 El Rancho Dr	★★★☆☆	80	$913	$911	$1,002	0.2%	-8.8%
Parkside Gardens - 1800 Sullivan Ln	★★☆☆☆	216	$1,191	$1,180	$1,081	0.9%	10.2%

© 2023 CoStar Group - Licensed to Merchants Capital - 1108535

Changes in Rent Comparables

1244 Carville Dr - Carville Park Apartments

ASKING RENT CHANGES PAST QUARTER & YEAR - THREE BEDROOM

			Rents Levels			Change	
Property Name - Address	Rating	Units	Now	Last Qtr	Last Year	Past Qtr	Past Year
Boulder Creek Apartments - 4005 Moorpark Ct	★★☆☆☆	140	$1,371	$1,371	$584	0%	134.8%
Silver Terrace - 1611 Wedekind Rd	★★☆☆☆	67	$1,397	$1,396	$1,381	0.1%	1.2%
Community Garden Apartments - 2330 Wedekin...	★★☆☆☆	40	$995	$994	$984	0.1%	1.2%

© 2023 CoStar Group - Licensed to Merchants Capital - 1108535

Rent Trends

1244 Carville Dr - Carville Park Apartments

PROPERTY ATTRIBUTES	Carville Park Apartments	Rent Comps	University 1-3 Star	Reno 1-3 Star
Existing Units	208	1,088	7,435	43,303
Building Rating	★★☆☆☆	★★☆☆☆ 2.2	★★☆☆☆ 2.2	★★☆☆☆ 2.3
Under Construction as % of Inventory	-	-	5.1%	3.5%

UNIT MIX	Carville Park Apartments	Rent Comps	University 1-3 Star	Reno 1-3 Star
1 Bedroom - 1 Bath	100%	25%	25%	33%

ASKING RENTS PER SF	Carville Park Apartments	Rent Comps	University 1-3 Star	Reno 1-3 Star
1 Bedroom - 1 Bath	$1.82	$1.30	$1.65	$1.88
Concessions	0.5%	0.3%	0.4%	0.7%

AVERAGE EFFECTIVE RENT GROWTH	Carville Park Apartments	Rent Comps	University 1-3 Star	Reno 1-3 Star
Current Quarter	0.1%	0.4%	1.1%	0.5%
1 Year Rent Growth	1.0%	14.3%	-0.8%	-0.9%
3 Year Rent Growth	5.5%	28.7%	13.7%	17.3%
5 Year Rent Growth	13.5%	40.5%	28.6%	29.3%
All-Time Average	2.7%	3.2%	3.0%	3.4%

VACANCY RATE	Carville Park Apartments	Rent Comps	University 1-3 Star	Reno 1-3 Star
Current Quarter	3.9%	2.9%	5.1%	7.7%
Last Quarter	3.9%	2.8%	5.3%	7.7%
1 Year Ago	1.9%	1.0%	5.8%	4.7%
3 Years Ago	2.4%	1.2%	3.0%	4.8%
5 Years Ago	1.9%	1.3%	2.5%	3.7%

© 2023 CoStar Group - Licensed to Merchants Capital - 1108535

Rent Trends

1244 Carville Dr - Carville Park Apartments

ONE BEDROOM ASKING RENT PER SQUARE FOOT

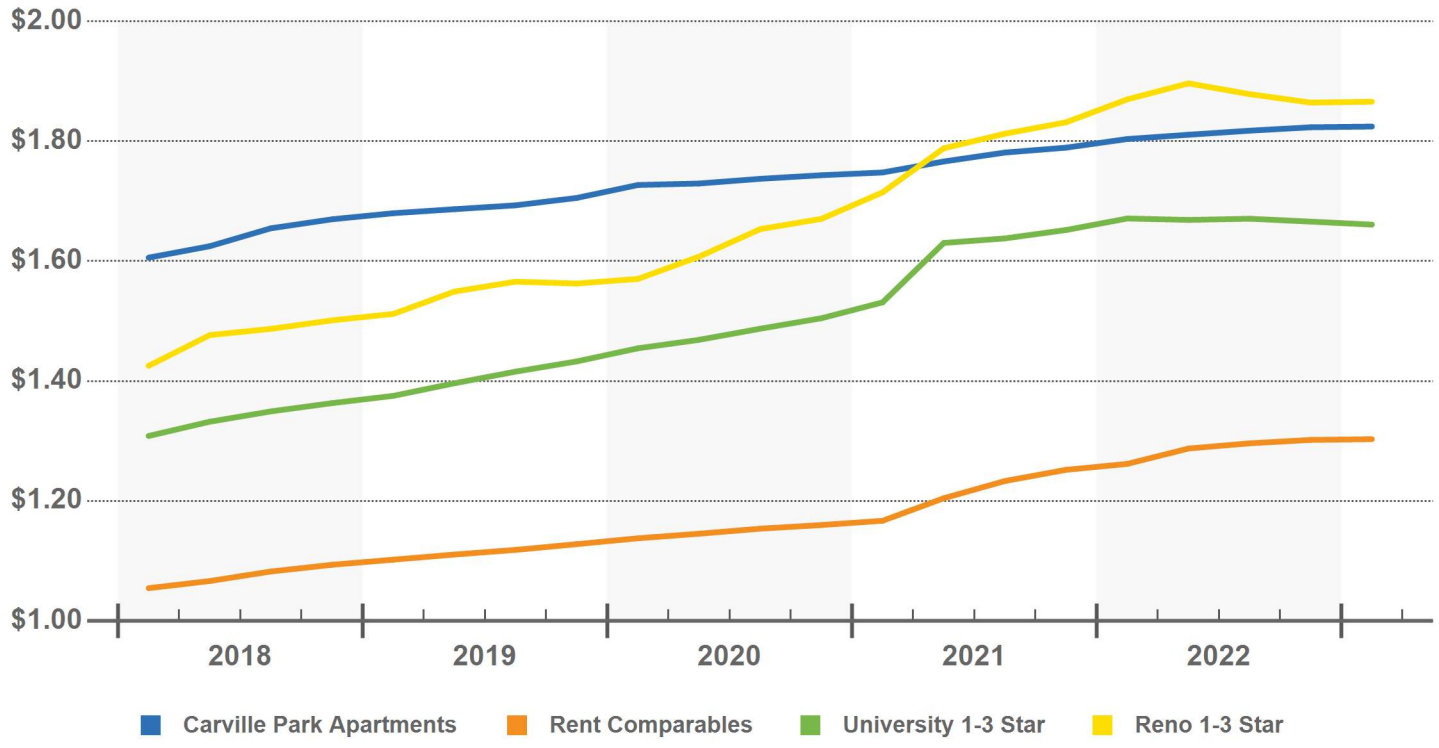

OVERALL ASKING RENT PER SQUARE FOOT

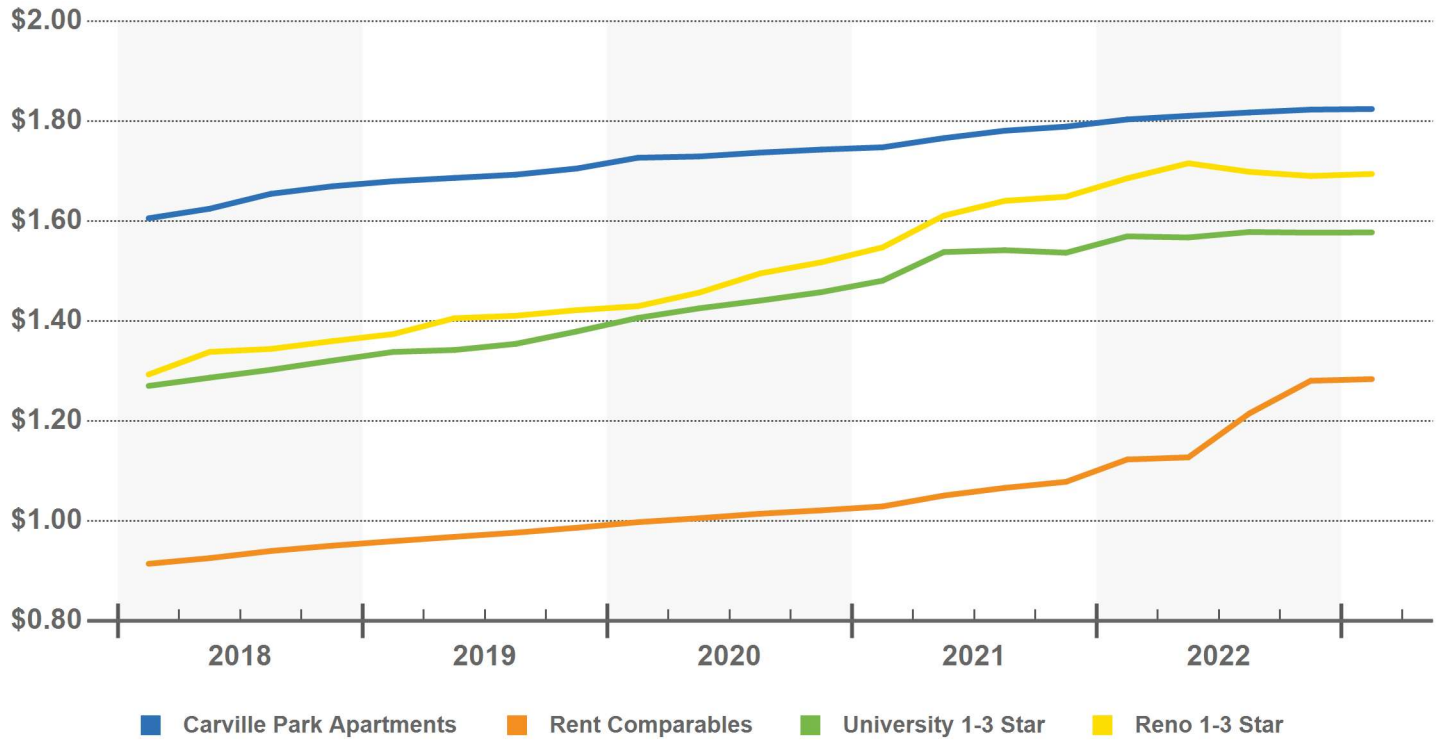

© 2023 CoStar Group - Licensed to Merchants Capital - 1108535

Rent Trends

1244 Carville Dr - Carville Park Apartments

OVERALL EFFECTIVE RENT PER SQUARE FOOT

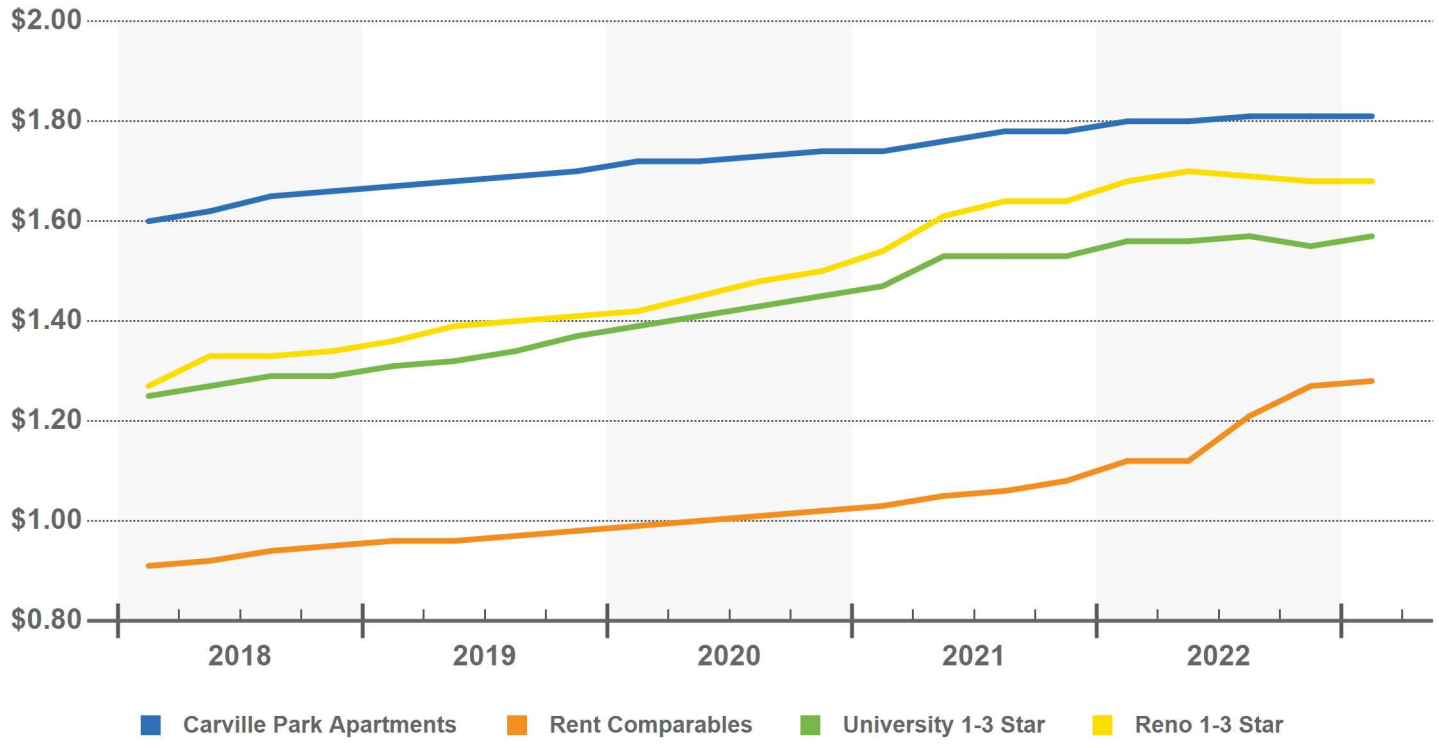

ANNUAL EFFECTIVE RENT GROWTH

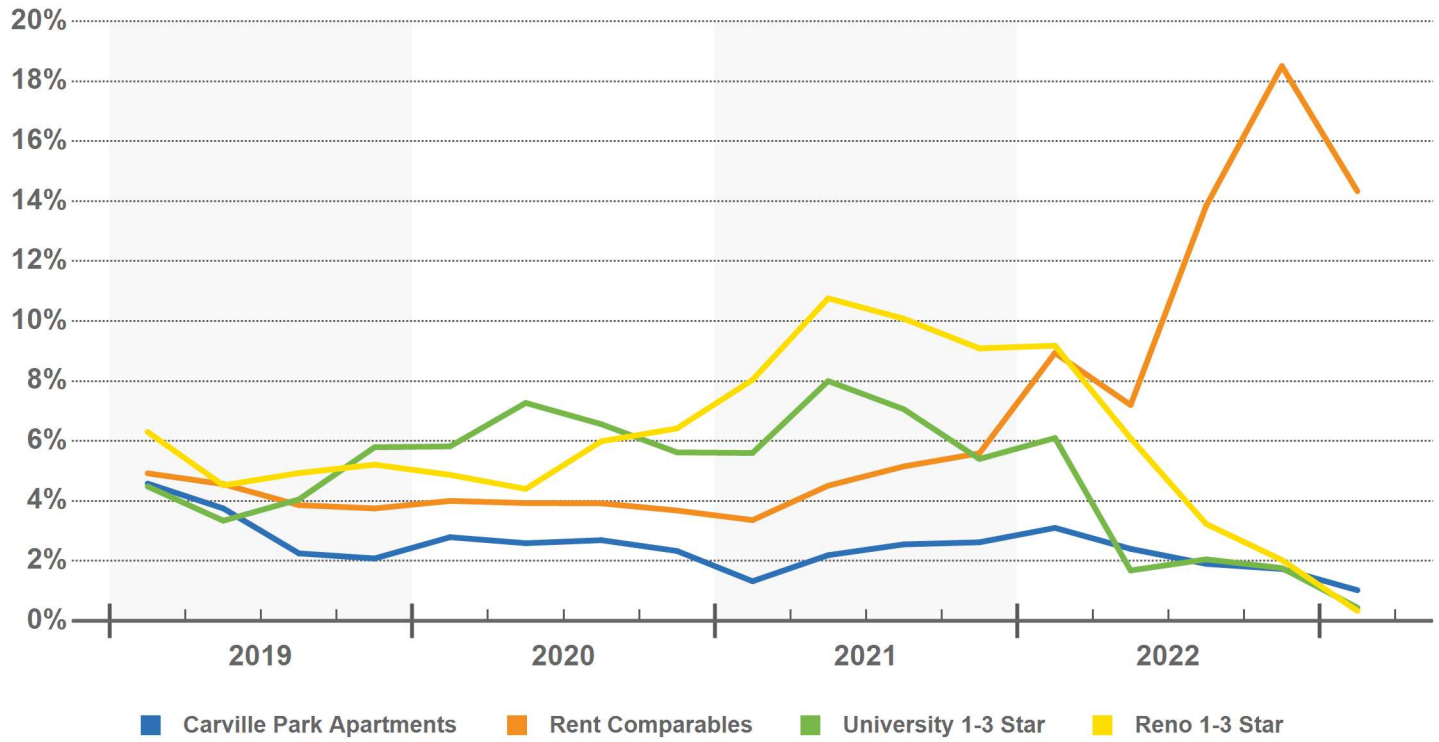

© 2023 CoStar Group - Licensed to Merchants Capital - 1108535

Rent Trends

CONCESSIONS

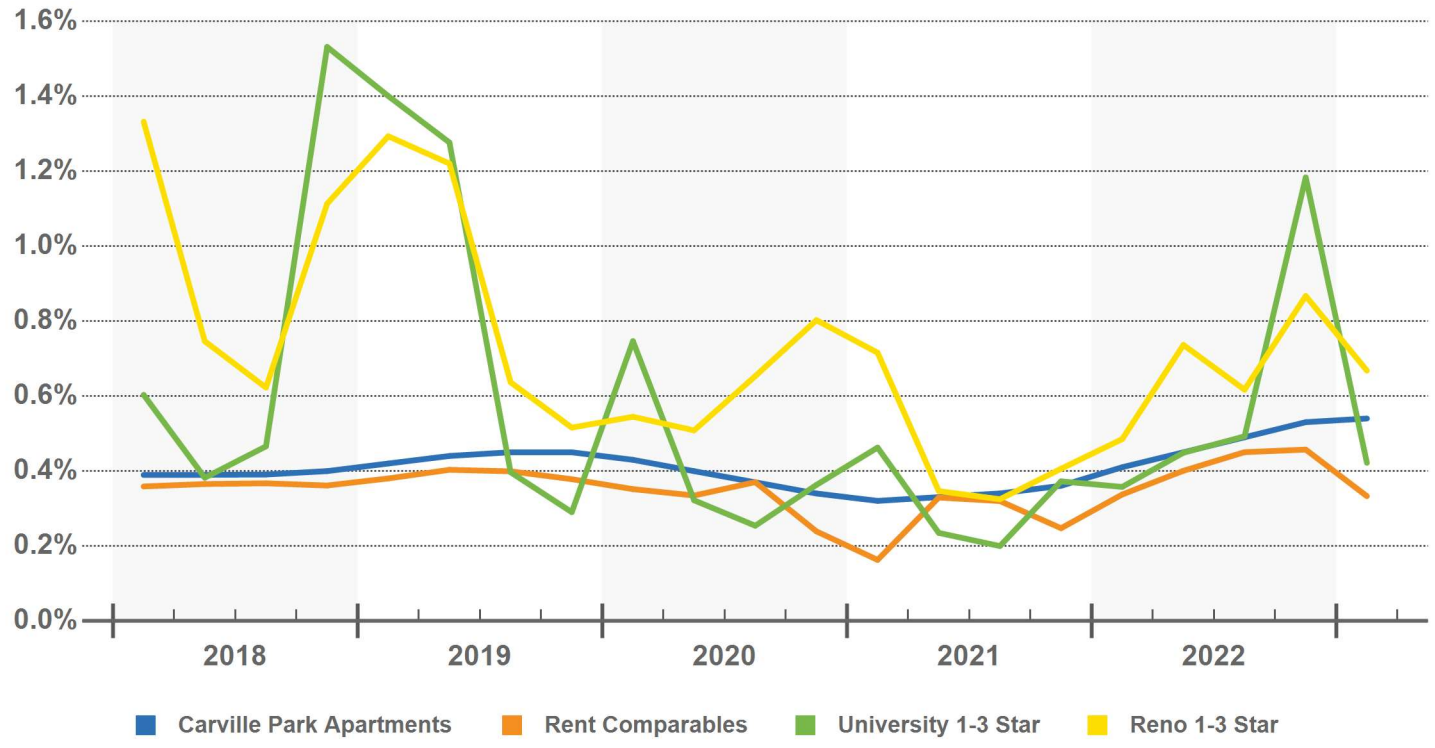

VACANCY RATES

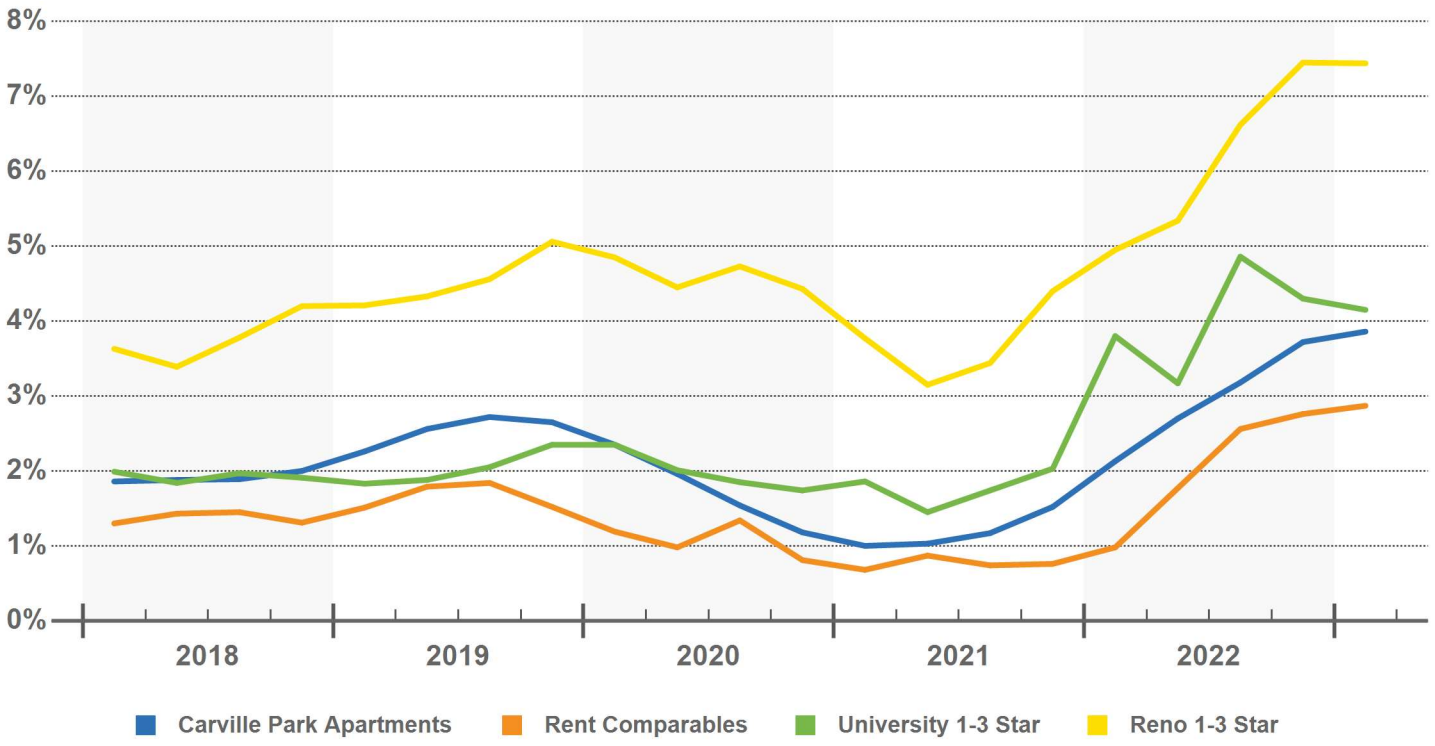

© 2023 CoStar Group - Licensed to Merchants Capital - 1108535

Rent Trends

1244 Carville Dr - Carville Park Apartments

OCCUPANCY RATES

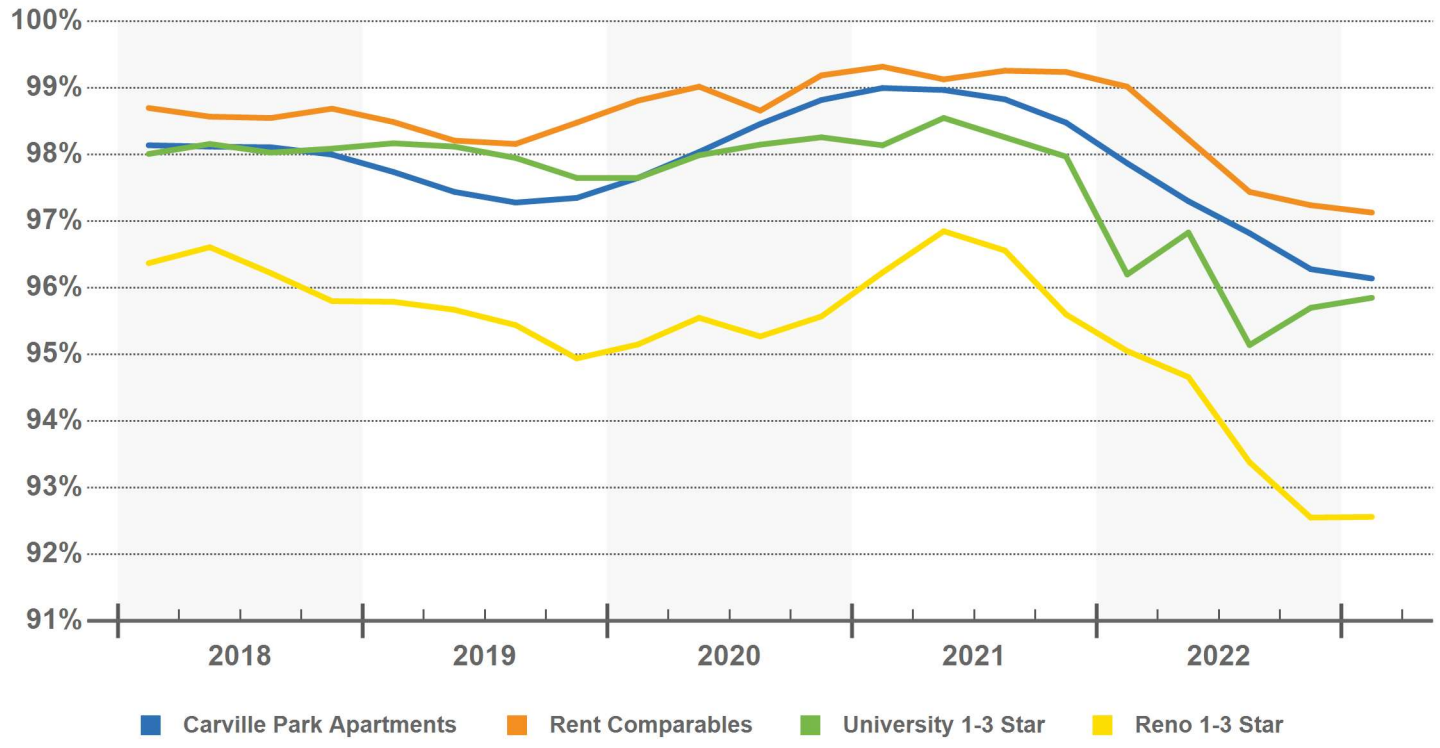

© 2023 CoStar Group - Licensed to Merchants Capital - 1108535

Rent Trends

RENT COMPARABLES HISTORICAL DATA BY YEAR

		Rental Rates Per SF				Vacancy			
Year	Units	Asking	Effective	Growth	Concessions	Units	Percent	Change	Absorption
2023	1,088	$1.28	$1.28	0.4%	0.3%	31	2.9%	0.1%	(1)
2022	1,088	$1.28	$1.27	18.5%	0.5%	30	2.8%	2.0%	(2)
2021	1,088	$1.08	$1.08	5.6%	0.3%	8	0.8%	0.0%	0
2020	1,088	$1.02	$1.02	3.7%	0.2%	9	0.8%	-0.7%	6
2019	1,088	$0.99	$0.98	3.8%	0.4%	17	1.5%	0.2%	3
2018	1,088	$0.95	$0.95	5.2%	0.4%	14	1.3%	0.1%	2
2017	1,088	$0.90	$0.90	3.5%	0.4%	13	1.2%	-1.8%	(1)
2016	1,088	$0.87	$0.87	6.1%	0.5%	32	2.9%	-2.0%	12
2015	1,088	$0.82	$0.82	4.2%	0.6%	53	4.9%	-0.7%	9
2014	1,088	$0.81	$0.79	0.7%	2.7%	61	5.6%	0.7%	(1)

RENT COMPARABLES HISTORICAL DATA BY QUARTER PAST 3 YEARS

		Rental Rates Per SF				Vacancy			
Quarter	Units	Asking	Effective	Growth	Concessions	Units	Percent	Change	Absorption
2023 Q1	1,088	$1.28	$1.28	0.4%	0.3%	31	2.9%	0.1%	(1)
2022 Q4	1,088	$1.28	$1.27	5.4%	0.5%	30	2.8%	0.2%	(2)
2022 Q3	1,088	$1.22	$1.21	7.8%	0.5%	28	2.6%	0.8%	(9)
2022 Q2	1,088	$1.13	$1.12	0.3%	0.4%	19	1.8%	0.7%	(9)
2022 Q1	1,088	$1.12	$1.12	4.1%	0.3%	11	1.0%	0.3%	(2)
2021 Q4	1,088	$1.08	$1.08	1.2%	0.3%	8	0.7%	0.0%	0
2021 Q3	1,088	$1.07	$1.06	1.5%	0.3%	8	0.7%	-0.1%	1
2021 Q2	1,088	$1.05	$1.05	1.9%	0.3%	9	0.8%	0.2%	(2)
2021 Q1	1,088	$1.03	$1.03	0.9%	0.2%	7	0.6%	-0.2%	1
2020 Q4	1,088	$1.02	$1.02	0.8%	0.2%	9	0.8%	-0.6%	6
2020 Q3	1,088	$1.01	$1.01	0.9%	0.4%	15	1.4%	0.4%	(4)
2020 Q2	1,088	$1.01	$1.00	0.8%	0.3%	11	1.0%	-0.2%	2

© 2023 CoStar Group - Licensed to Merchants Capital - 1108535



Construction Survey

1244 Carville Dr

Carville Park Apartments

208 Unit Apartment Building

Reno, Nevada - Northeast Reno Neighborhood

PREPARED BY

MERCHANTS CAPITAL

Blake Barile

MCC Credit Analyst

Overall Construction Summary

1244 Carville Dr - Carville Park Apartments

All-Time Annual Average	Delivered Past 8 Quarters	Deliveries Next 8 Quarters	Proposed Next 8 Quarters
260	1,388	1,945	2,630

MAP OF 24 MONTH DELIVERIES, UNDER CONSTRUCTION, PROPOSED

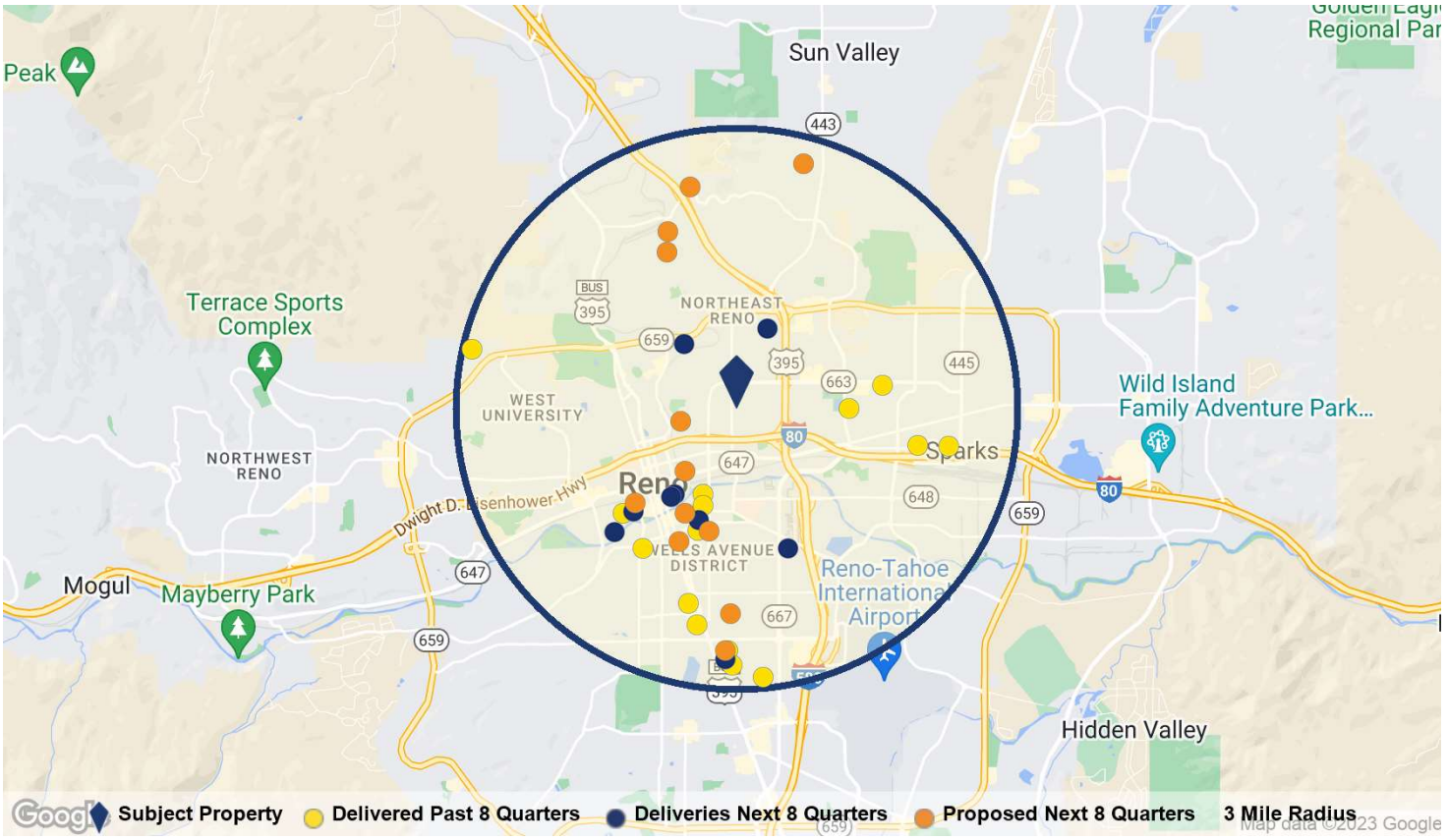

PAST AND FUTURE DELIVERIES

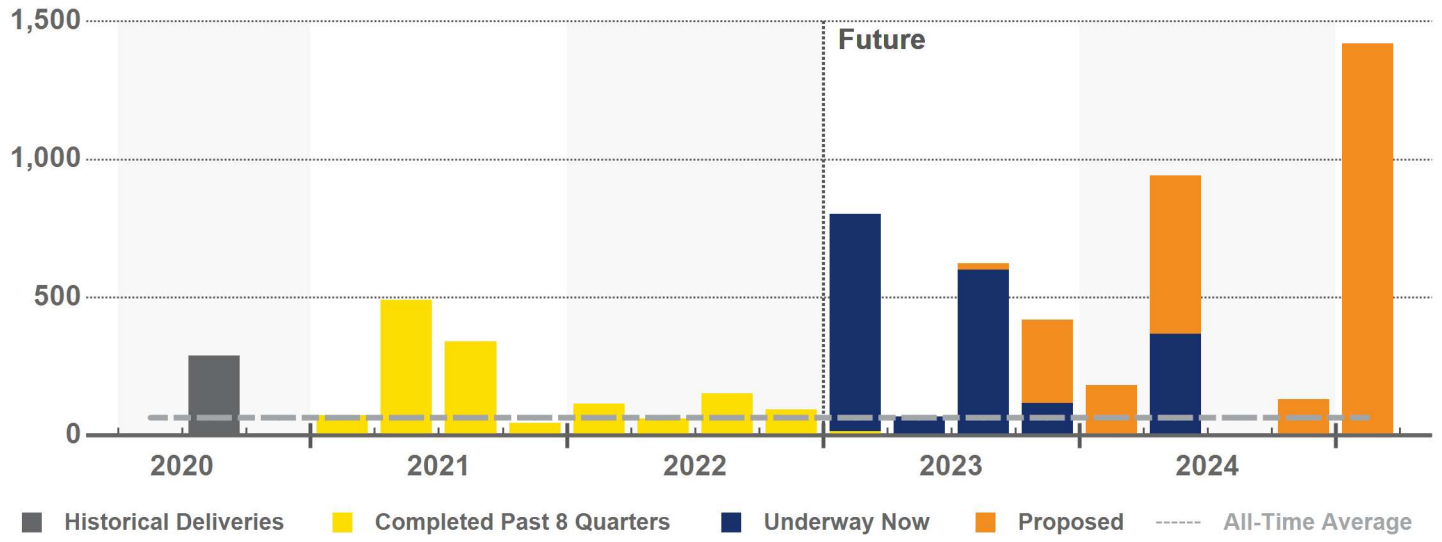

© 2023 CoStar Group - Licensed to Merchants Capital - 1108535

Under Construction Properties

1244 Carville Dr - Carville Park Apartments

Properties	Units	Percent of Inventory	Avg. No. Units
9	1,945	7.2%	216

UNDER CONSTRUCTION PROPERTIES

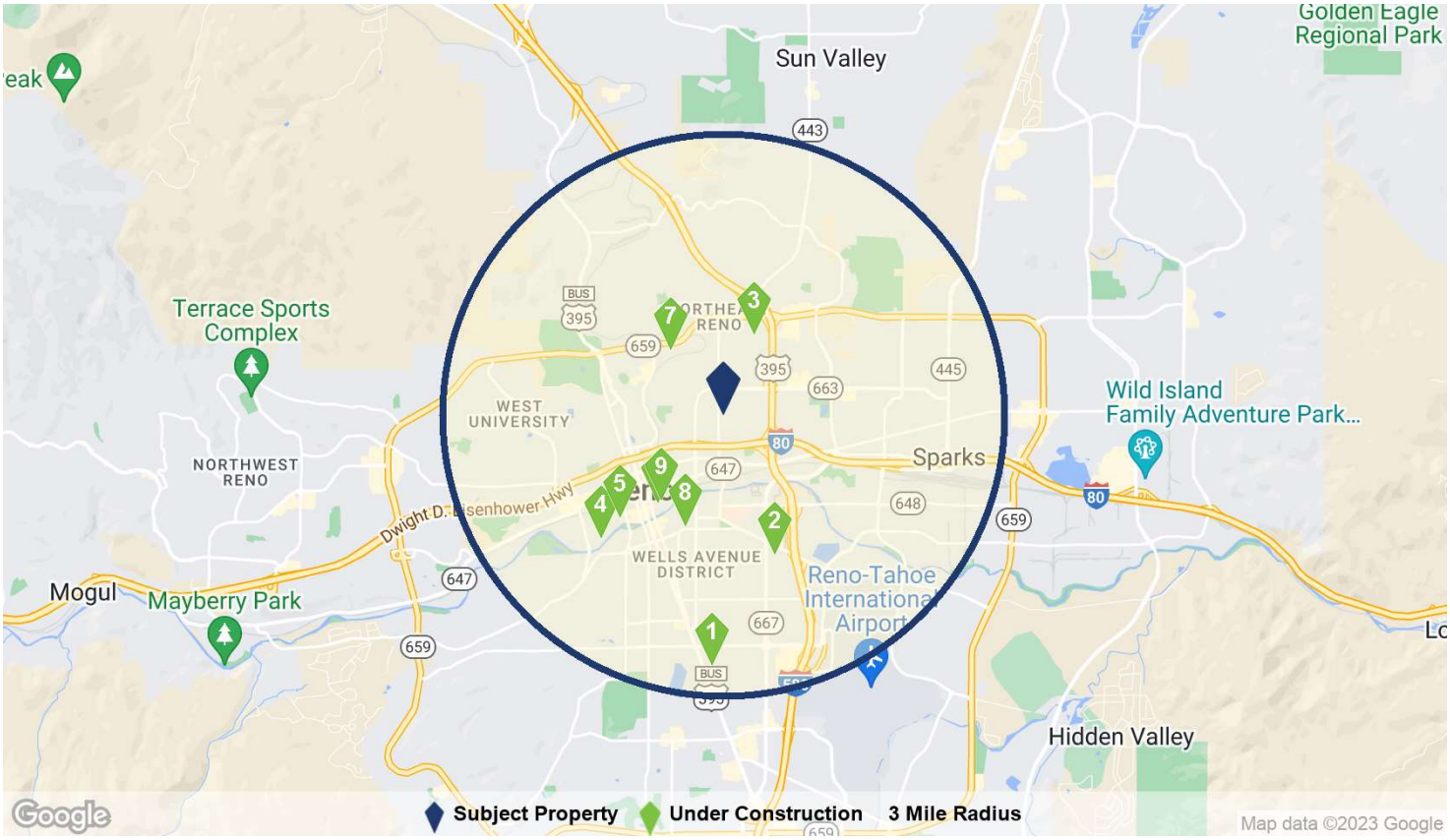

UNDER CONSTRUCTION SUMMARY STATISTICS

	Low	Average	Median	High
Property Size in Units	34	216	216	369
Number of Stories	4	5	5	7
Average Unit Size SF	381	580	540	967
Star Rating	★★★☆☆	★★★☆☆ 3.6	★★★★☆	★★★★☆
Estimated Delivery Date	Mar 2023	Jun 2023	May 2023	Jun 2024
Months to Delivery	1	4	3	16
Construction Period in Months	10	21	22	35

© 2023 CoStar Group - Licensed to Merchants Capital - 1108535

Under Construction Properties

COMPLETIONS WITHIN NEXT 3 MONTHS

	Property Name/Address	Rating	Units	Stories	Start	Complete	Developer/Owner
1	Atwood @ RED 2060 Experience Ave	★★★★☆	359	5	Jan 2021	Mar 2023	- -
2	The Rivet 2050 Market St	★★★☆☆	216	4	Apr 2020	Mar 2023	BLC Builders Fortify Holdings
3	Springview by Vintage 2325 Clear Acre Ln	★★★★☆	180	-	May 2022	Mar 2023	Greenstreet Development Inc. Vintage Housing
4	700 Riverside Dr	★★★☆☆	34	4	May 2021	Mar 2023	Urban Real Estate Investments, L... -
5	The Mod 2 344 W 2nd St	★★★★☆	69	5	May 2021	May 2023	Tanamera Construction, LLC Chris Vargas

COMPLETIONS 3-6 MONTHS AWAY

	Property Name/Address	Rating	Units	Stories	Start	Complete	Developer/Owner
6	Ballpark Apartments 214 N Lake St	★★★★☆	369	5	Apr 2022	Jul 2023	Pacific Coast Development Pacific Coast Development
7	The Edison 2450 Valley Rd	★★★★☆	232	7	Feb 2022	Aug 2023	Horizon Realty Advisors Horizon Realty Advisors

COMPLETIONS MORE THAN 6 MONTHS AWAY

	Property Name/Address	Rating	Units	Stories	Start	Complete	Developer/Owner
8	Ryland Apartments 517 Ryland St	★★★☆☆	118	5	Jun 2022	Dec 2023	- -
9	Ballpark Apartments 201 Evans Ave	★★★★☆	368	5	Feb 2022	Jun 2024	Pacific Development LLC Fennemore Craig P C

© 2023 CoStar Group - Licensed to Merchants Capital - 1108535

1 2060 Experience Ave - Atwood @ RED

Reno, Nevada - Sierra Meadows Neighborhood



PROPERTY		CONSTRUCTION INFO	
Property Size:	359 Units	Start Date:	Jan 2021
Stories:	5	Completion Date:	Mar 2023
Average Unit Size:	966 SF	Build Time:	26 Months
Rent Type:	Market	Time to Delivery:	1 Month

2 2050 Market St - The Rivet

Reno, Nevada - Sierra Meadows Neighborhood

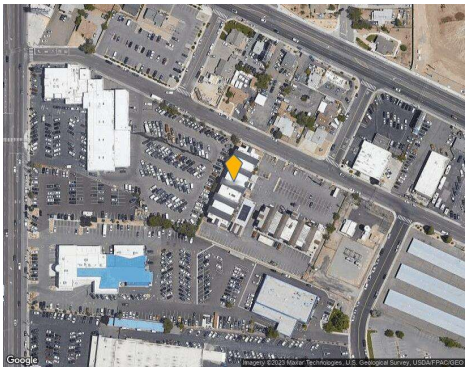

PROPERTY		CONSTRUCTION INFO	
Property Size:	216 Units	Start Date:	Apr 2020
Stories:	4	Completion Date:	Mar 2023
Average Unit Size:	381 SF	Build Time:	35 Months
Rent Type:	Market	Time to Delivery:	1 Month

DEVELOPER	OWNER
BLC Builders	Fortify Holdings

SITE AMENITIES

Bicycle Storage, Elevator, Laundry Facilities, Maintenance on site, Package Service, Pool, Property Manager on Site

UNIT AMENITIES

Air Conditioning, Heating, High Speed Internet Access, Kitchen, Microwave, Oven, Range, Stainless Steel Appliances, Tub/Shower

3 2325 Clear Acre Ln - Springview by Vintage

Reno, Nevada - Northeast Reno Neighborhood



PROPERTY		CONSTRUCTION INFO	
Property Size:	180 Units	Start Date:	May 2022
Stories:	-	Completion Date:	Mar 2023
Average Unit Size:	615 SF	Build Time:	10 Months
Rent Type:	Affordable	Time to Delivery:	1 Month

DEVELOPER	OWNER
Greenstreet Development Inc.	Vintage Housing

© 2023 CoStar Group - Licensed to Merchants Capital - 1108535

4 700 Riverside Dr

Reno, Nevada - Riverwalk Neighborhood

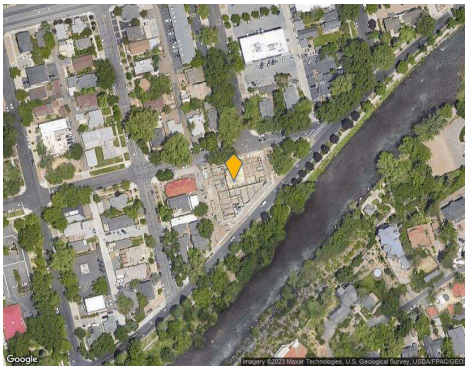

PROPERTY		CONSTRUCTION INFO	
Property Size:	34 Units	Start Date:	May 2021
Stories:	4	Completion Date:	Mar 2023
Average Unit Size:	-	Build Time:	22 Months
Rent Type:	Market	Time to Delivery:	1 Month

DEVELOPER

Urban Real Estate Investments, LLC

5 344 W 2nd St - The Mod 2

Reno, Nevada - Riverwalk Neighborhood



PROPERTY		CONSTRUCTION INFO	
Property Size:	69 Units	Start Date:	May 2021
Stories:	5	Completion Date:	May 2023
Average Unit Size:	400 SF	Build Time:	24 Months
Rent Type:	Market	Time to Delivery:	3 Months

DEVELOPER

Tanamera Construction, LLC

OWNER

Chris Vargas

NOTES

The bed-bath mix, unit counts, and sizes are estimated per property management.

SITE AMENITIES

On-Site Retail

6 214 N Lake St - Ballpark Apartments

Reno, Nevada - Downtown Reno Neighborhood

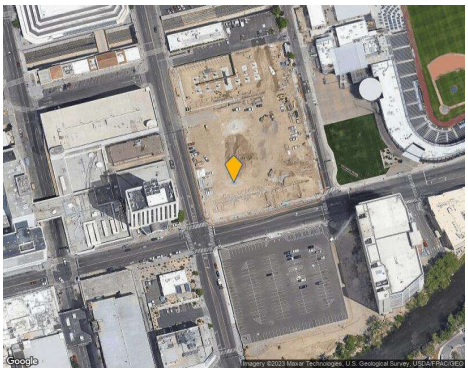

PROPERTY		CONSTRUCTION INFO	
Property Size:	369 Units	Start Date:	Apr 2022
Stories:	5	Completion Date:	Jul 2023
Average Unit Size:	540 SF	Build Time:	15 Months
Rent Type:	Market	Time to Delivery:	5 Months

DEVELOPER

Pacific Coast Development

OWNER

Pacific Coast Development

SITE AMENITIES

24 Hour Access, Grill, Pet Play Area, Pool, Roof Terrace, Spa

© 2023 CoStar Group - Licensed to Merchants Capital - 1108535

7 2450 Valley Rd - The Edison

Reno, Nevada - West University Neighborhood

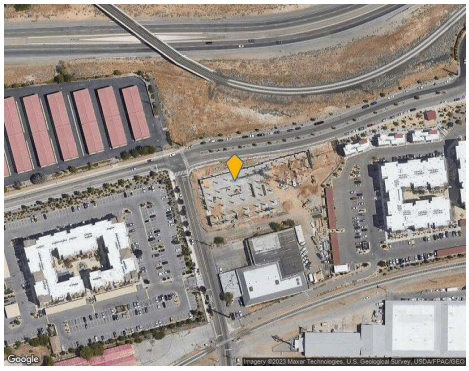

PROPERTY		CONSTRUCTION INFO	
Property Size:	232 Units	Start Date:	Feb 2022
Stories:	7	Completion Date:	Aug 2023
Average Unit Size:	-	Build Time:	18 Months
Rent Type:	Market	Time to Delivery:	6 Months

DEVELOPER	OWNER
Horizon Realty Advisors	Horizon Realty Advisors

NOTES

Beds, baths, sf and unit counts are estimated.

SITE AMENITIES

Bicycle Storage, Fitness Center, Grill, Lounge

UNIT AMENITIES

Air Conditioning, Heating, Kitchen, Oven, Range, Refrigerator

8 517 Ryland St - Ryland Apartments

Reno, Nevada - Midtown Reno Neighborhood

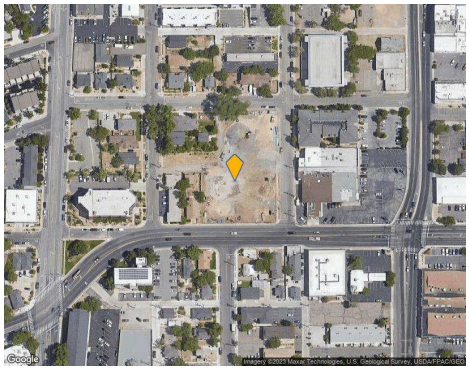

PROPERTY		CONSTRUCTION INFO	
Property Size:	118 Units	Start Date:	Jun 2022
Stories:	5	Completion Date:	Dec 2023
Average Unit Size:	-	Build Time:	18 Months
Rent Type:	Market	Time to Delivery:	10 Months

9 201 Evans Ave - Ballpark Apartments

Reno, Nevada - Downtown Reno Neighborhood



PROPERTY		CONSTRUCTION INFO	
Property Size:	368 Units	Start Date:	Feb 2022
Stories:	5	Completion Date:	Jun 2024
Average Unit Size:	-	Build Time:	28 Months
Rent Type:	Market	Time to Delivery:	16 Months

DEVELOPER	OWNER
Pacific Development LLC	Fennemore Craig P C

© 2023 CoStar Group - Licensed to Merchants Capital - 1108535

Deliveries Past 12 Months Summary

1244 Carville Dr - Carville Park Apartments

Properties	Units	Vacancy Rate	Avg. Asking Rent/Unit
8	438	45.2%	$1,562

DELIVERIES IN PAST 12 MONTHS

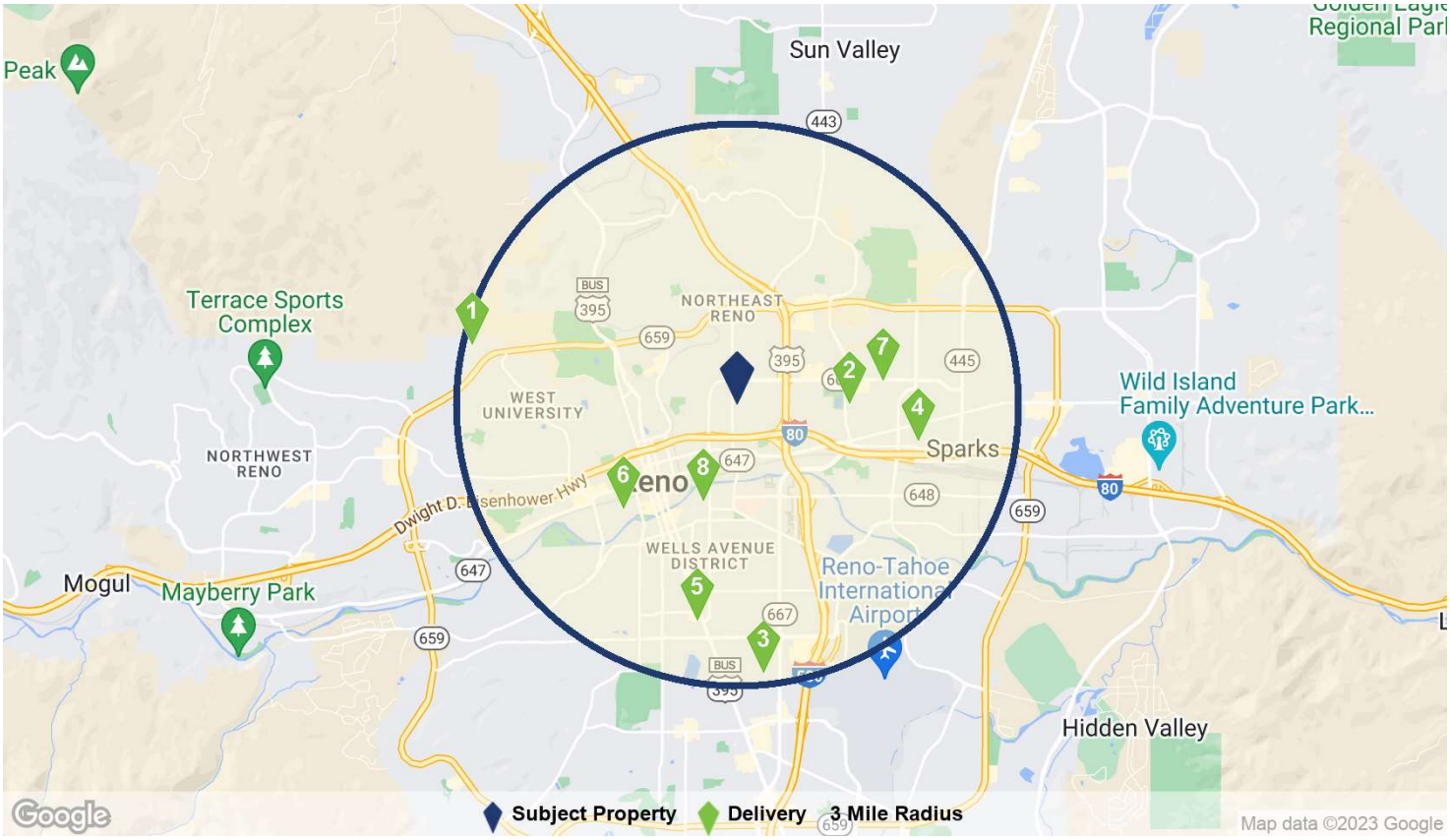

DELIVERIES PAST 12 MONTHS SUMMARY STATISTICS

Unit Mix	Low	Average	Median	High
Property Size in Units	14	55	35	132
Studio Units	3	15	14	30
One Bedroom Units	6	37	24	129
Two Bedroom Units	2	19	3	85
Three Bedroom Units	-	-	-	-
Property Attributes	**Low**	**Average**	**Median**	**High**
Number of Stories	1	2	3	6
Average Unit Size SF	250	690	667	1,224
Rating	★★★☆☆	★★★☆☆ 3.0	★★★☆☆	★★★★☆
Leasing Performance	**Low**	**Average**	**Median**	**High**
Vacancy Rate	0%	45.2%	31.9%	100%
Asking Rent Per Unit	$877	$1,562	$1,453	$2,073
Effective Rent Per Unit	$860	$1,559	$1,450	$2,073
Asking Rent Per SF	$1.16	$1.98	$2.27	$4.70
Effective Rent Per SF	$1.14	$1.98	$2.27	$4.70
Concessions	0%	0.5%	0%	2.0%

© 2023 CoStar Group - Licensed to Merchants Capital - 1108535

Deliveries Past 12 Months Summary

1244 Carville Dr - Carville Park Apartments

	Property Name/Address	Rating	Units	Stories	Start	Complete	Developer/Owner
1	The Keystone Trailhead… 3029 Leadership Pky	★★★☆☆	115	3	Apr 21	Mar 22	- Kromer Investments Inc.
2	Sierra Cove Apartments 2338 Greyhaven Ln	★★★☆☆	34	2	Mar 21	May 22	Pinecrest Construction & Develop… Northern Nevada Community Ho…
3	Traditions West 401 Linden St	★★★☆☆	27	3	Jun 19	Jun 22	- PropFunds LP
4	The Atrium 1415 C St	★★★★☆	132	6	Feb 19	Jul 22	Silverwing Development Silverwing Development
5	Kramer's Midtown 1607 S Virginia St	★★★★☆	21	1	Sep 21	Sep 22	- -
6	Eden Towers 147 Ralston St	★★★☆☆	36	4	Mar 20	Oct 22	- Kromer Investments Inc.
7	The Hub@Oddie 1835 Oddie Blvd	★★★☆☆	59	1	Aug 21	Nov 22	Solum Construction Nordby-Mitchell Family Trust
8	64 Park St	★★★☆☆	14	3	Jan 22	Jan 23	- -

© 2023 CoStar Group - Licensed to Merchants Capital - 1108535

Deliveries Past 12 Months

1 3029 Leadership Pky - The Keystone Trailhead Village

Reno, Nevada - West University Neighborhood



PROPERTY	
Property Size:	115 Units, 3 Floors
Avg. Unit Size:	1,224 SF
Year Built:	Mar 2022
Type:	Apartments - All
Rent Type:	Market
Parking:	-
Distance to Subject:	2.90 Miles
Distance to Transit:	-

PROPERTY MANAGER

Kromer - The Keystone Trailhead Village

(775) 562-2326

OWNER

-

UNIT BREAKDOWN

			Unit Mix		Availability		Avg Asking Rent		Avg Effective Rent		
Bed	Bath	Avg SF	Units	Mix %	Units	Mix %	Per Unit	Per SF	Per Unit	Per SF	Concessions
1	1	848	10	8.7%	0	0.0%	$1,805	$2.13	$1,805	$2.13	0.0%
1	1	884	20	17.4%	0	0.0%	$1,885	$2.13	$1,885	$2.13	0.0%
2	2	1,295	30	26.1%	0	0.0%	$2,125	$1.64	$2,125	$1.64	0.0%
2	2	1,299	15	13.0%	0	0.0%	$2,130	$1.64	$2,130	$1.64	0.0%
2	2	1,407	40	34.8%	0	0.0%	$2,175	$1.55	$2,175	$1.55	0.0%

Totals	Avg SF	Units	Mix %	Units	Mix %	Per Unit	Per SF	Per Unit	Per SF	Concessions
All 1 Beds	872	30	26.1%	0	0.0%	$1,858	$2.13	$1,858	$2.13	0.0%
All 2 Beds	1,348	85	73.9%	0	0.0%	$2,149	$1.59	$2,149	$1.59	0.0%
Totals	1,224	115	100%	0	0.0%	$2,073	$1.69	$2,073	$1.69	0.0%

Estimate Updated February 02, 2023

SITE AMENITIES

Business Center, Clubhouse, Fitness Center, Maintenance on site, Picnic Area, Walking/Biking Trails, Wi-Fi

UNIT AMENITIES

Air Conditioning, Balcony, Cable Ready, Dishwasher, Disposal, Granite Countertops, Hardwood Floors, High Speed Internet Access, Stainless Steel Appliances, Washer/Dryer, Washer/Dryer Hookup

RECURRING EXPENSES

Dog Rent $25

Cat Rent $25

Free Cable, Internet

ONE TIME EXPENSES

Application Fee $45

PET POLICY

Dog Allowed $25/Mo, 2 Maximum, 50 lb. Maximum
Cat Allowed $25/Mo, 2 Maximum

© 2023 CoStar Group - Licensed to Merchants Capital - 1108535

Deliveries Past 12 Months

2 2338 Greyhaven Ln - Sierra Cove Apartments

Sparks, Nevada - Downtown Sparks Neighborhood

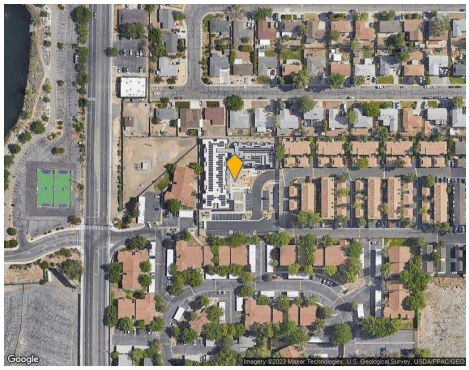

PROPERTY	
Property Size:	34 Units, 2 Floors
Avg. Unit Size:	756 SF
Year Built:	May 2022
Type:	Apartments - All
Rent Type:	Market/Affordable
Parking:	-
Distance to Subject:	1.20 Miles
Distance to Transit:	-

PROPERTY MANAGER

NNCH - Sierra Cove

(775) 337-9155

OWNER

-

UNIT BREAKDOWN

			Unit Mix		Availability		Avg Asking Rent		Avg Effective Rent		
Bed	Bath	Avg SF	Units	Mix %	Units	Mix %	Per Unit	Per SF	Per Unit	Per SF	Concessions
1	1	650	14	41.2%	0	0.0%	$783	$1.20	$767	$1.18	2.0%
2	2	830	20	58.8%	0	0.0%	$943	$1.14	$924	$1.11	2.0%

Totals	Avg SF	Units	Mix %	Units	Mix %	Per Unit	Per SF	Per Unit	Per SF	Concessions
All 1 Beds	650	14	41.2%	0	0.0%	$783	$1.20	$767	$1.18	2.0%
All 2 Beds	830	20	58.8%	0	0.0%	$943	$1.14	$924	$1.11	2.0%
Totals	756	34	100%	0	0.0%	$877	$1.16	$860	$1.14	2.0%

Estimate Updated January 28, 2023

SITE AMENITIES

Business Center, Gated, Grill, Lounge, Security System

UNIT AMENITIES

Air Conditioning, Cable Ready, Family Room, High Speed Internet Access, Kitchen, Oven, Refrigerator, Tub/Shower, Window Coverings

© 2023 CoStar Group - Licensed to Merchants Capital - 1108535

Deliveries Past 12 Months

3 401 Linden St - Traditions West

Reno, Nevada - Sierra Meadows Neighborhood



PROPERTY	
Property Size:	27 Units, 3 Floors
Avg. Unit Size:	789 SF
Year Built:	Jun 2022
Type:	Apartments - All
Rent Type:	Market
Parking:	-
Distance to Subject:	2.89 Miles
Distance to Transit:	-

PROPERTY MANAGER

Sky West - Traditions West

(775) 827-6700

OWNER

-

UNIT BREAKDOWN

			Unit Mix		Availability		Avg Asking Rent		Avg Effective Rent		
Bed	Bath	Avg SF	Units	Mix %	Units	Mix %	Per Unit	Per SF	Per Unit	Per SF	Concessions
1	1	750	24	88.9%	0	0.0%	$1,304	$1.74	$1,296	$1.73	0.6%
2	2	1,100	3	11.1%	0	0.0%	$1,706	$1.55	$1,695	$1.54	0.6%

Totals	Avg SF	Units	Mix %	Units	Mix %	Per Unit	Per SF	Per Unit	Per SF	Concessions
All 1 Beds	750	24	88.9%	0	0.0%	$1,304	$1.74	$1,296	$1.73	0.6%
All 2 Beds	1,100	3	11.1%	0	0.0%	$1,706	$1.55	$1,695	$1.54	0.6%
Totals	789	27	100%	0	0.0%	$1,349	$1.71	$1,341	$1.70	0.6%

Estimate Updated January 28, 2023

SITE AMENITIES

24 Hour Access, Maintenance on site, Property Manager on Site

UNIT AMENITIES

Air Conditioning, Heating, Kitchen, Tub/Shower

RECURRING EXPENSES

Free Water, Trash Removal, Sewer

ONE TIME EXPENSES

Admin Fee $10

Application Fee $35

PET POLICY

No Pets Allowed

© 2023 CoStar Group - Licensed to Merchants Capital - 1108535

Deliveries Past 12 Months

4 1415 C St - The Atrium

Sparks, Nevada - Victorian Square Neighborhood



PROPERTY	
Property Size:	132 Units, 6 Floors
Avg. Unit Size:	618 SF
Year Built:	Jul 2022
Type:	Apartments - All
Rent Type:	Market
Parking:	-
Distance to Subject:	1.97 Miles
Distance to Transit:	-

PROPERTY MANAGER

FPI - The Atrium

(775) 657-9269

OWNER

-

UNIT BREAKDOWN

			Unit Mix		Availability		Avg Asking Rent		Avg Effective Rent		
Bed	Bath	Avg SF	Units	Mix %	Units	Mix %	Per Unit	Per SF	Per Unit	Per SF	Concessions
1	1	578	94	71.2%	0	0.0%	$1,410	$2.44	$1,410	$2.44	0.0%
1	1	683	34	25.8%	0	0.0%	$1,525	$2.23	$1,525	$2.23	0.0%
1	1	983	1	0.8%	0	0.0%	$1,625	$1.65	$1,625	$1.65	0.0%
2	2	871	1	0.8%	0	0.0%	$1,705	$1.96	$1,705	$1.96	0.0%
2	2	912	1	0.8%	0	0.0%	$1,735	$1.90	$1,735	$1.90	0.0%
2	2	1,317	1	0.8%	0	0.0%	$1,855	$1.41	$1,855	$1.41	0.0%
Totals		Avg SF	Units	Mix %	Units	Mix %	Per Unit	Per SF	Per Unit	Per SF	Concessions
All 1 Beds		609	129	97.7%	0	0.0%	$1,442	$2.37	$1,442	$2.37	0.0%
All 2 Beds		1,033	3	2.3%	0	0.0%	$1,765	$1.71	$1,765	$1.71	0.0%
Totals		618	132	100%	0	0.0%	$1,449	$2.34	$1,449	$2.34	0.0%

Estimate — Updated January 28, 2023

RECURRING EXPENSES

Dog Rent $50	Cat Rent $50	Free Unassigned Garage Parking
Storage Fee $75	Free Cable, Air Conditioning	

ONE TIME EXPENSES

Dog Deposit $300	Cat Deposit $250	Dog Fee $100
Cat Fee $50	Admin Fee $150	Application Fee $40

PET POLICY

Dog Allowed One-Time Fee: $100-100, $300 Deposit, $50/Mo, 2 Maximum, 25 lb. Maximum
Cat Allowed One-Time Fee: $50-50, $250 Deposit, $50/Mo, 2 Maximum, 25 lb. Maximum

© 2023 CoStar Group - Licensed to Merchants Capital - 1108535

Deliveries Past 12 Months

5 1607 S Virginia St - Kramer's Midtown

Reno, Nevada - Midtown Reno Neighborhood

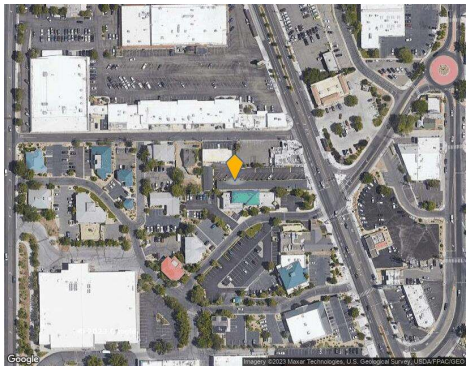

PROPERTY	
Property Size:	21 Units, 1 Floors
Avg. Unit Size:	250 SF
Year Built:	Sep 2022
Type:	Apartments - All
Rent Type:	Market
Parking:	-
Distance to Subject:	2.34 Miles
Distance to Transit:	-

PROPERTY MANAGER

Kramer Properties- Kramer's Midtown

(775) 900-2833

OWNER

-

UNIT BREAKDOWN

			Unit Mix		Availability		Avg Asking Rent		Avg Effective Rent		
Bed	Bath	Avg SF	Units	Mix %	Units	Mix %	Per Unit	Per SF	Per Unit	Per SF	Concessions
Studio	1	250	21	100%	2	9.5%	$1,175	$4.70	$1,175	$4.70	0.0%

Totals	Avg SF	Units	Mix %	Units	Mix %	Per Unit	Per SF	Per Unit	Per SF	Concessions
All Studios	250	21	100%	2	9.5%	$1,175	$4.70	$1,175	$4.70	0.0%
Totals	250	21	100%	2	9.5%	$1,175	$4.70	$1,175	$4.70	0.0%

Estimate Updated January 28, 2023

SITE AMENITIES

Clubhouse, Community-Wide WiFi, Grill, Key Fob Entry, Laundry Facilities, Pool

UNIT AMENITIES

Coffee System, Granite Countertops, Microwave, Patio

RECURRING EXPENSES

Dog Rent $35	Cat Rent $35	Free Gas, Water, Electricity, Heat, Trash…

ONE TIME EXPENSES

Dog Deposit $300	Cat Deposit $300	Application Fee $20

PET POLICY

Dog Allowed $300 Deposit, $35/Mo, 40 lb. Maximum
Cat Allowed $300 Deposit, $35/Mo, 25 lb. Maximum

© 2023 CoStar Group - Licensed to Merchants Capital - 1108535

Deliveries Past 12 Months

6 147 Ralston St - Eden Towers

Reno, Nevada - Riverwalk Neighborhood

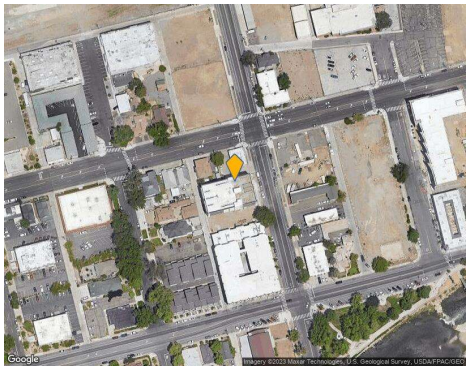

PROPERTY	
Property Size:	36 Units, 4 Floors
Avg. Unit Size:	711 SF
Year Built:	Oct 2022
Type:	Apartments - All
Rent Type:	Market
Parking:	-
Distance to Subject:	1.65 Miles
Distance to Transit:	-

PROPERTY MANAGER

Kromer - Eden Towers

(775) 786-8888

OWNER

-

UNIT BREAKDOWN

			Unit Mix		Availability		Avg Asking Rent		Avg Effective Rent		
Bed	Bath	Avg SF	Units	Mix %	Units	Mix %	Per Unit	Per SF	Per Unit	Per SF	Concessions
Studio	1	576	6	16.7%	0	0.0%	$1,445	$2.51	$1,445	$2.51	0.0%
Studio	1	737	16	44.4%	0	0.0%	$1,600	$2.17	$1,600	$2.17	0.0%
Studio	1	795	8	22.2%	0	0.0%	$1,650	$2.08	$1,650	$2.08	0.0%
1	1	665	6	16.7%	0	0.0%	$1,550	$2.33	$1,550	$2.33	0.0%

Totals	Avg SF	Units	Mix %	Units	Mix %	Per Unit	Per SF	Per Unit	Per SF	Concessions
All Studios	720	30	83.3%	0	0.0%	$1,582	$2.20	$1,582	$2.20	0.0%
All 1 Beds	665	6	16.7%	0	0.0%	$1,550	$2.33	$1,550	$2.33	0.0%
Totals	711	36	100%	0	0.0%	$1,577	$2.22	$1,577	$2.22	0.0%

Estimate Updated January 28, 2023

© 2023 CoStar Group - Licensed to Merchants Capital - 1108535

Deliveries Past 12 Months

7 1835 Oddie Blvd - The Hub@Oddie

Sparks, Nevada - Downtown Sparks Neighborhood



PROPERTY	
Property Size:	59 Units, 1 Floors
Avg. Unit Size:	624 SF
Year Built:	Nov 2022
Type:	Apartments - All
Rent Type:	Market
Parking:	-
Distance to Subject:	1.57 Miles
Distance to Transit:	-

PROPERTY MANAGER

NCS- The Hub@Oddie

(775) 737-7327

OWNER

-

UNIT BREAKDOWN

			Unit Mix		Availability		Avg Asking Rent		Avg Effective Rent		
Bed	Bath	Avg SF	Units	Mix %	Units	Mix %	Per Unit	Per SF	Per Unit	Per SF	Concessions
Studio	1	231	2	3.4%	0	0.0%	$850	$3.68	$815	$3.53	4.2%
Studio	1	262	2	3.4%	0	0.0%	$900	$3.44	$862	$3.29	4.2%
Studio	1	295	1	1.7%	0	0.0%	$900	$3.05	$862	$2.92	4.2%
Studio	1	352	2	3.4%	0	0.0%	$1,000	$2.84	$958	$2.72	4.2%
1	1	472	5	8.5%	3	60.0%	$1,200	$2.54	$1,200	$2.54	0.0%
1	1	495	5	8.5%	5	100%	$1,250	$2.53	$1,250	$2.53	0.0%
1	1	521	4	6.8%	1	25.0%	$1,300	$2.50	$1,300	$2.50	0.0%
1	1	537	4	6.8%	4	100%	$1,300	$2.42	$1,300	$2.42	0.0%
1	1	540	4	6.8%	1	25.0%	$1,400	$2.59	$1,400	$2.59	0.0%
1	1	584	4	6.8%	4	100%	$1,350	$2.31	$1,350	$2.31	0.0%
1	1	680	4	6.8%	1	25.0%	$1,550	$2.28	$1,550	$2.28	0.0%
1	1	728	8	13.6%	2	25.0%	$1,675	$2.30	$1,675	$2.30	0.0%
1	1	844	4	6.8%	1	25.0%	$1,600	$1.90	$1,600	$1.90	0.0%
1	1	903	4	6.8%	1	25.0%	$1,950	$2.16	$1,950	$2.16	0.0%
1	1	1,048	4	6.8%	1	25.0%	$2,150	$2.05	$2,150	$2.05	0.0%
2	2	732	1	1.7%	0	0.0%	$1,600	$2.19	$1,600	$2.19	0.0%
2	2	845	1	1.7%	1	100%	$1,850	$2.19	$1,850	$2.19	0.0%

Totals	Avg SF	Units	Mix %	Units	Mix %	Per Unit	Per SF	Per Unit	Per SF	Concessions
All Studios	284	7	11.9%	0	0.0%	$914	$3.22	$876	$3.09	4.2%
All 1 Beds	666	50	84.7%	24	48.0%	$1,521	$2.28	$1,521	$2.28	0.0%
All 2 Beds	789	2	3.4%	1	50.0%	$1,725	$2.19	$1,725	$2.19	0.0%
Totals	625	59	100%	25	42.4%	$1,456	$2.33	$1,451	$2.32	0.3%

Estimate Updated February 07, 2023

SITE AMENITIES

Business Center, Courtyard, Fitness Center, Laundry Facilities, Pet Care

UNIT AMENITIES

Air Conditioning, High Speed Internet Access, Kitchen, Microwave, Oven, Range, Refrigerator, Stainless Steel Appliances, Tub/Shower

© 2023 CoStar Group - Licensed to Merchants Capital - 1108535

Deliveries Past 12 Months

RECURRING EXPENSES

Dog Rent $25	Cat Rent $25	Free Unassigned Surface Lot Parking
Storage Fee $75		

ONE TIME EXPENSES

Dog Deposit $350	Cat Deposit $350	Application Fee $35

PET POLICY

Dog Allowed $350 Deposit, $25/Mo, 2 Maximum, 30 lb. Maximum
Cat Allowed $350 Deposit, $25/Mo, 2 Maximum, 30 lb. Maximum

© 2023 CoStar Group - Licensed to Merchants Capital - 1108535

Deliveries Past 12 Months

64 Park St

Reno, Nevada - Midtown Reno Neighborhood



PROPERTY	
Property Size:	14 Units, 3 Floors
Avg. Unit Size:	552 SF
Year Built:	Jan 2023
Type:	Apartments - All
Rent Type:	Market
Parking:	-
Distance to Subject:	1.10 Miles
Distance to Transit:	-

PROPERTY MANAGER

Gaston & Wilkerson - 64 Park St

-

OWNER

-

UNIT BREAKDOWN

			Unit Mix		Availability		Avg Asking Rent		Avg Effective Rent		
Bed	Bath	Avg SF	Units	Mix %	Units	Mix %	Per Unit	Per SF	Per Unit	Per SF	Concessions
Studio	1	396	3	21.4%	0	0.0%	$1,250	$3.16	$1,250	$3.16	0.0%
1	1	533	9	64.3%	0	0.0%	$1,450	$2.72	$1,450	$2.72	0.0%
2	2	868	2	14.3%	0	0.0%	$2,000	$2.30	$2,000	$2.30	0.0%
Totals		Avg SF	Units	Mix %	Units	Mix %	Per Unit	Per SF	Per Unit	Per SF	Concessions
All Studios		396	3	21.4%	0	0.0%	$1,250	$3.16	$1,250	$3.16	0.0%
All 1 Beds		533	9	64.3%	0	0.0%	$1,450	$2.72	$1,450	$2.72	0.0%
All 2 Beds		868	2	14.3%	0	0.0%	$2,000	$2.30	$2,000	$2.30	0.0%
Totals		552	14	100%	0	0.0%	$1,486	$2.69	$1,486	$2.69	0.0%

Estimate

Updated January 28, 2023

UNIT AMENITIES

Hardwood Floors, Kitchen, Tub/Shower, Walk-In Closets, Washer/Dryer

RECURRING EXPENSES

Free Gas, Water, Electricity, Heat, Sewer

ONE TIME EXPENSES

Application Fee $35

PET POLICY

No Pets Allowed

© 2023 CoStar Group - Licensed to Merchants Capital - 1108535

Construction Summary

1244 Carville Dr - Carville Park Apartments

UNITS UNDER CONSTRUCTION

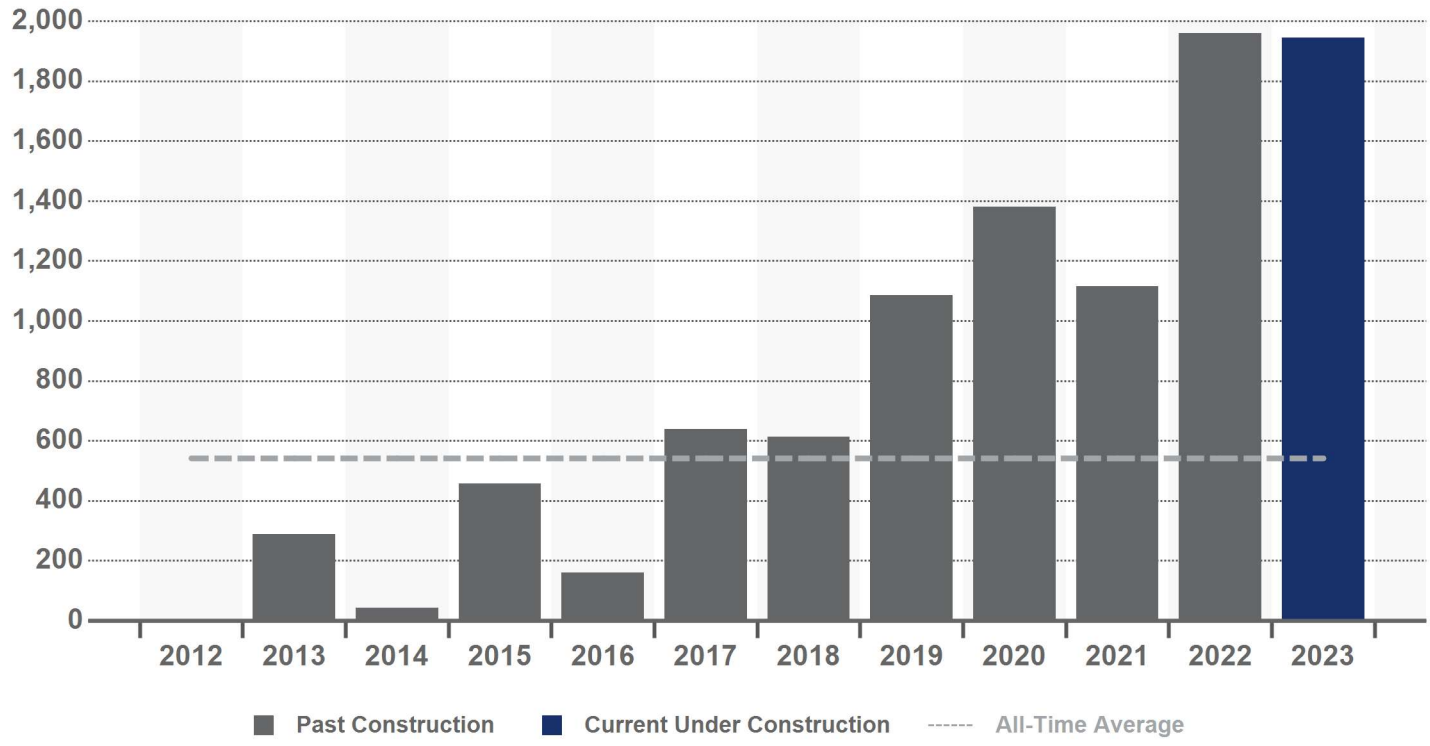

PROJECTED DELIVERY DATES OF UNITS UNDER CONSTRUCTION

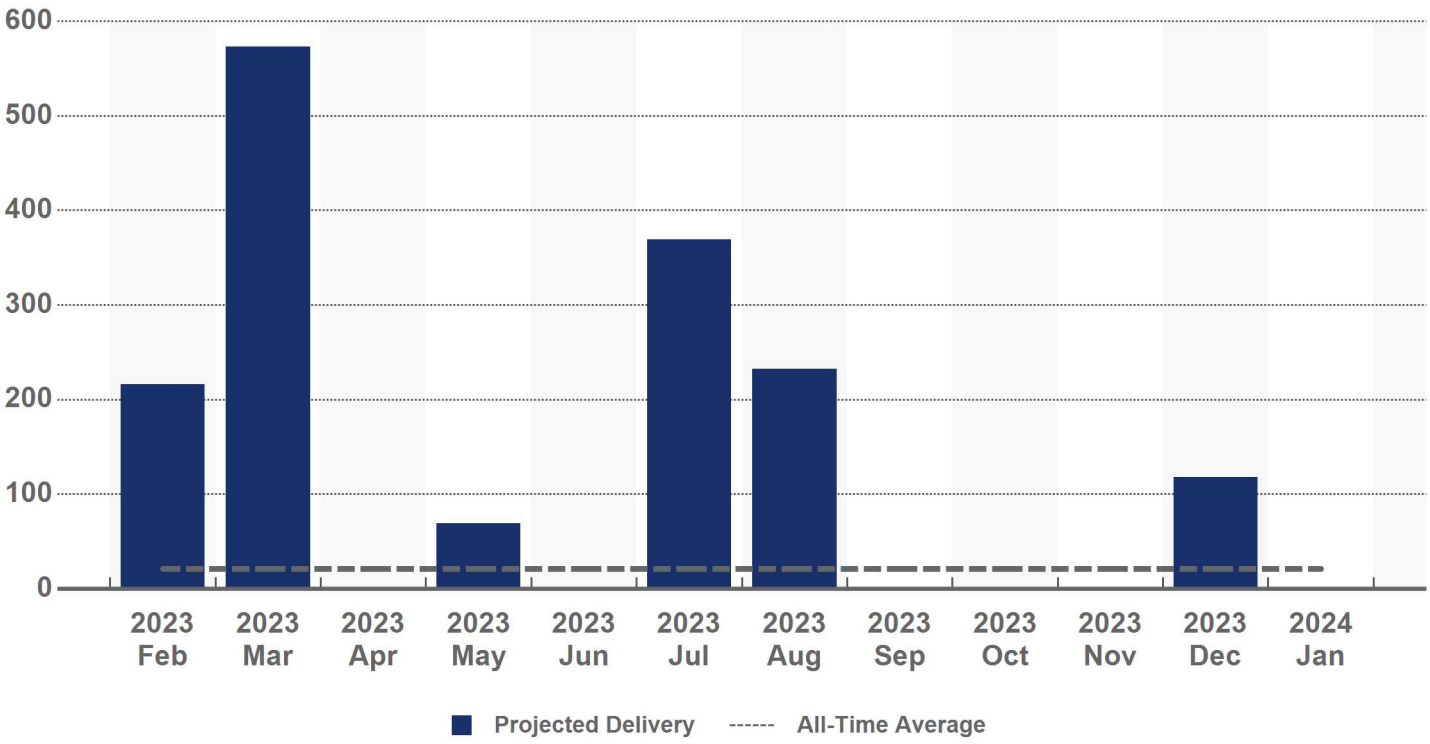

© 2023 CoStar Group - Licensed to Merchants Capital - 1108535

Construction Summary

1244 Carville Dr - Carville Park Apartments

CONSTRUCTION DELIVERIES IN UNITS

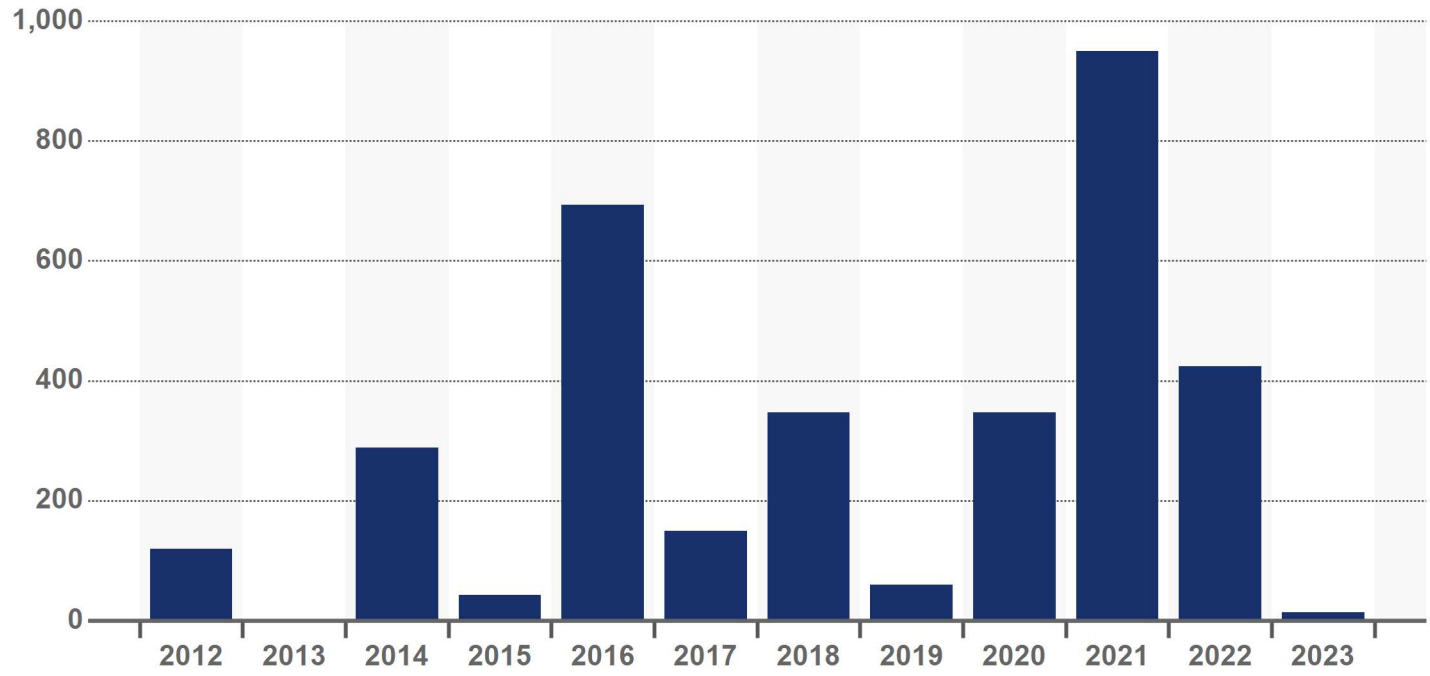

CONSTRUCTION STARTS IN UNITS

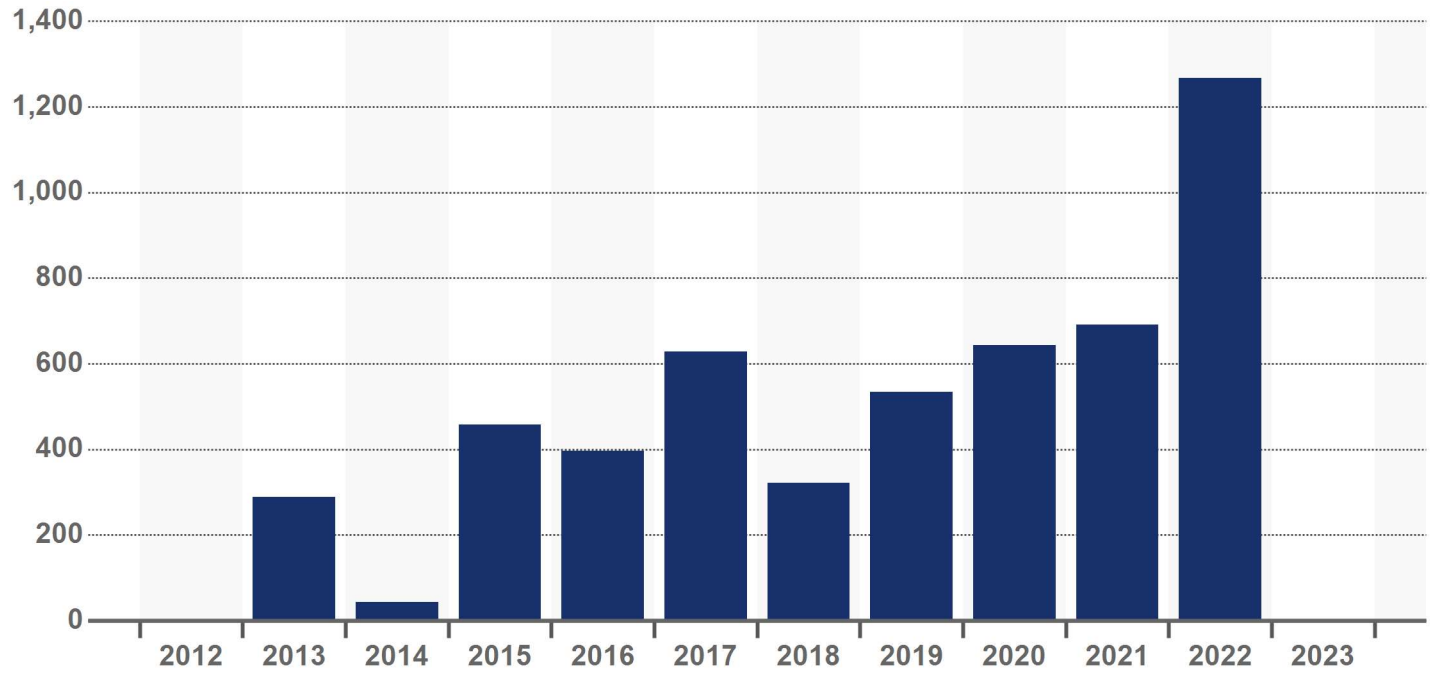

© 2023 CoStar Group - Licensed to Merchants Capital - 1108535

Construction Summary

1244 Carville Dr - Carville Park Apartments

PERCENT OCCUPIED AT DELIVERY

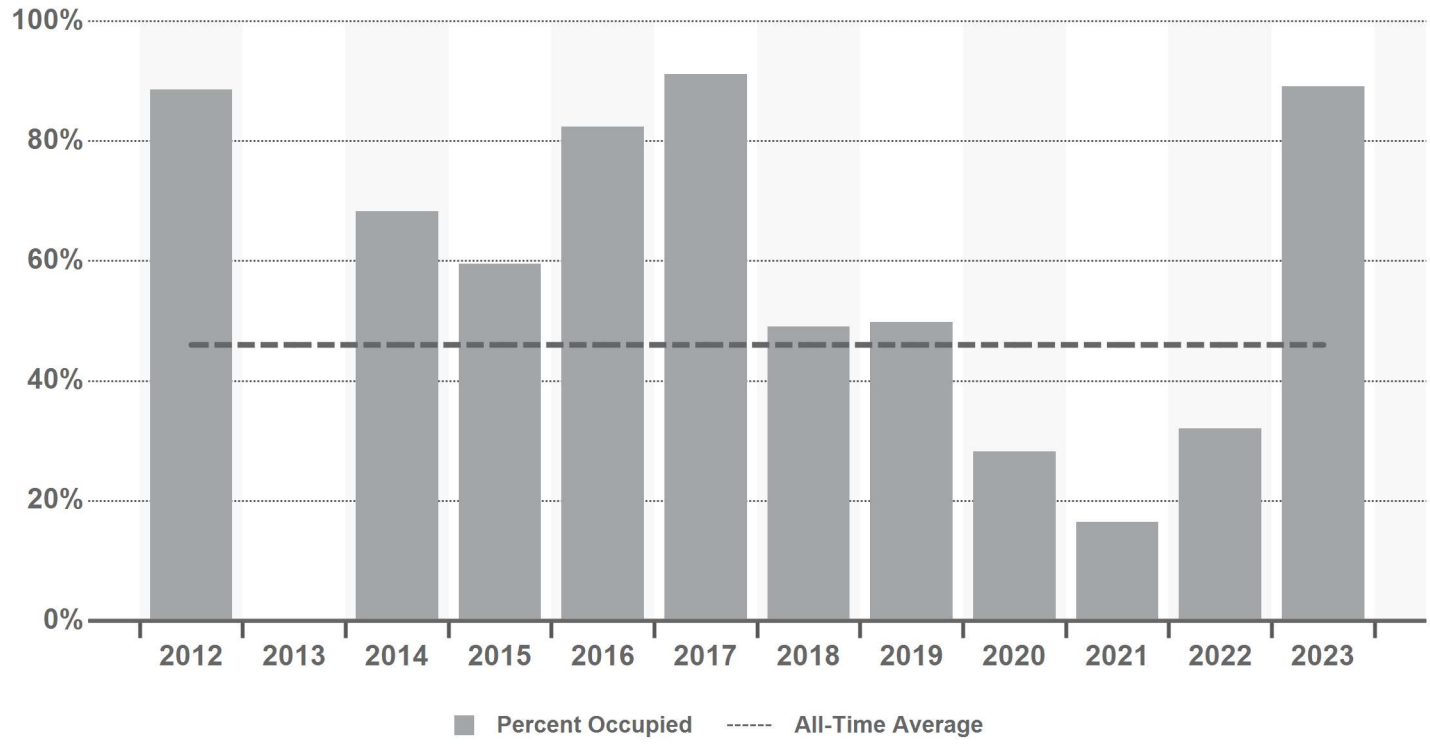

UNITS OCCUPIED IN DELIVERIES OVER TIME

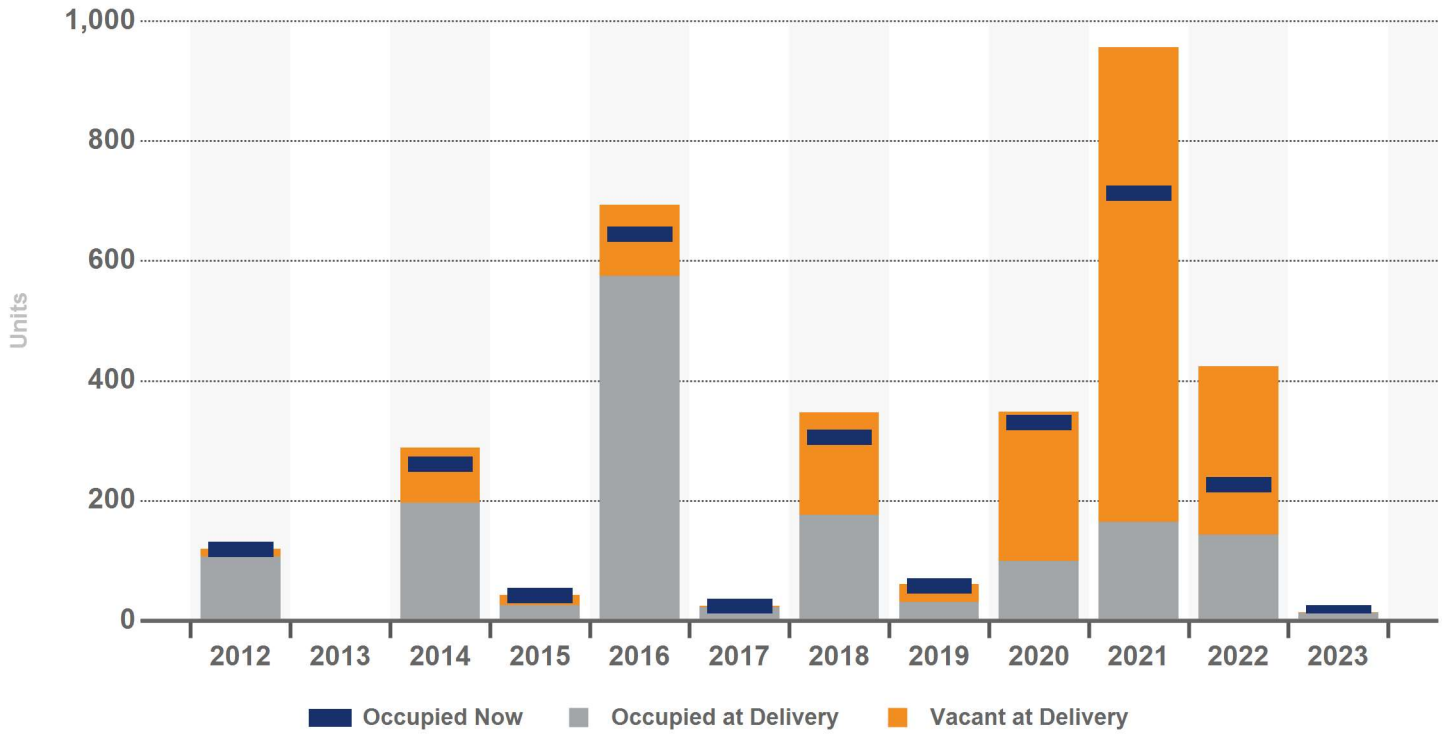

© 2023 CoStar Group - Licensed to Merchants Capital - 1108535

Construction Summary

NEW CONSTRUCTION OCCUPANCY AFTER DELIVERY BY YEAR BUILT

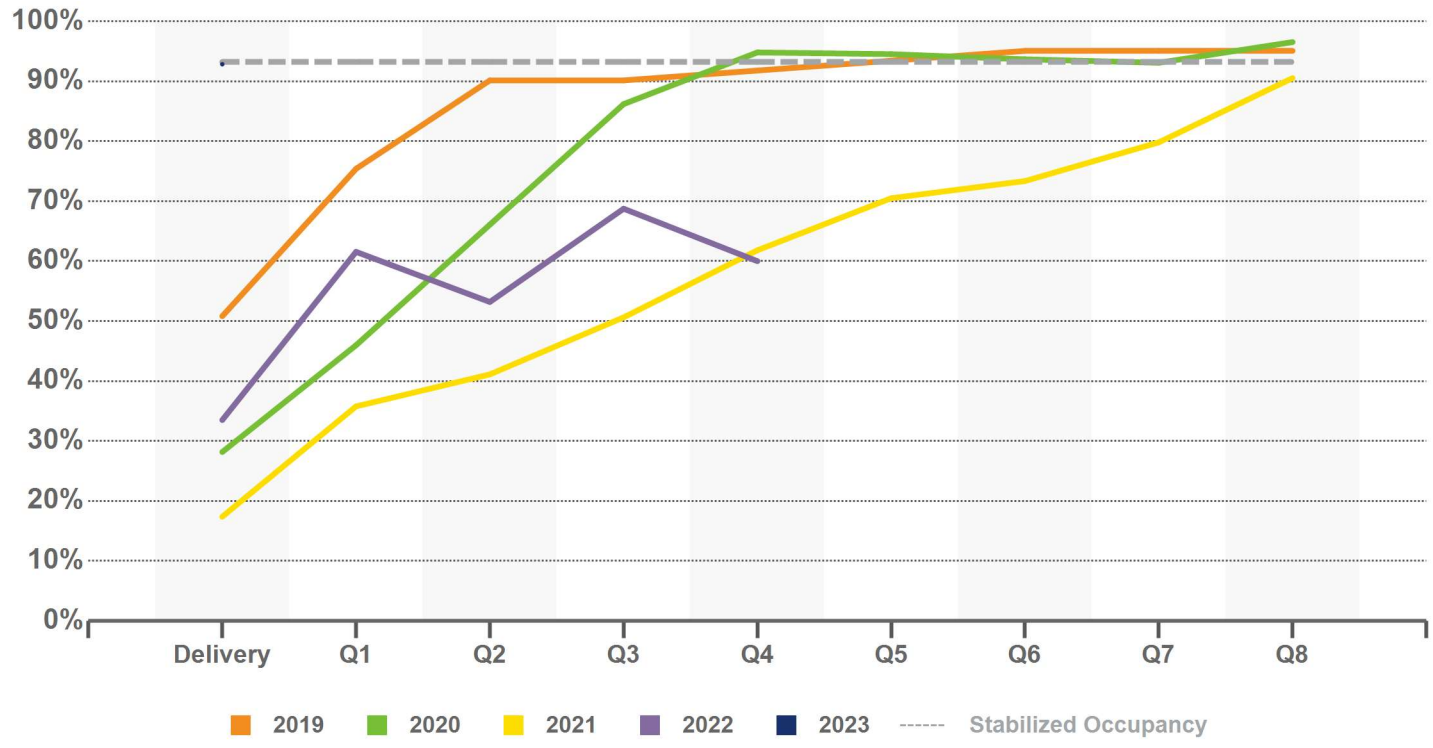

ABSORPTION IN UNITS

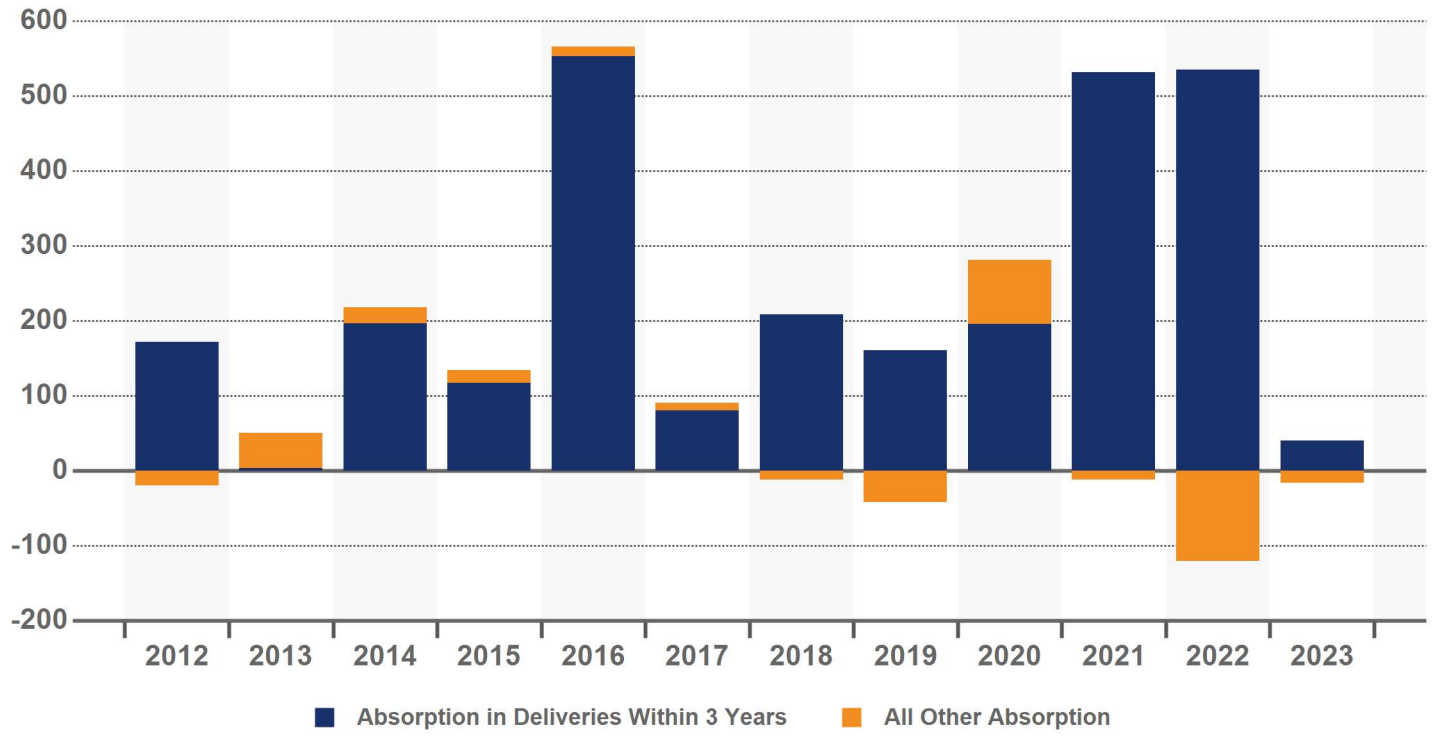

© 2023 CoStar Group - Licensed to Merchants Capital - 1108535

Construction Summary

1244 Carville Dr - Carville Park Apartments

ASKING RENTAL RATES PER UNIT

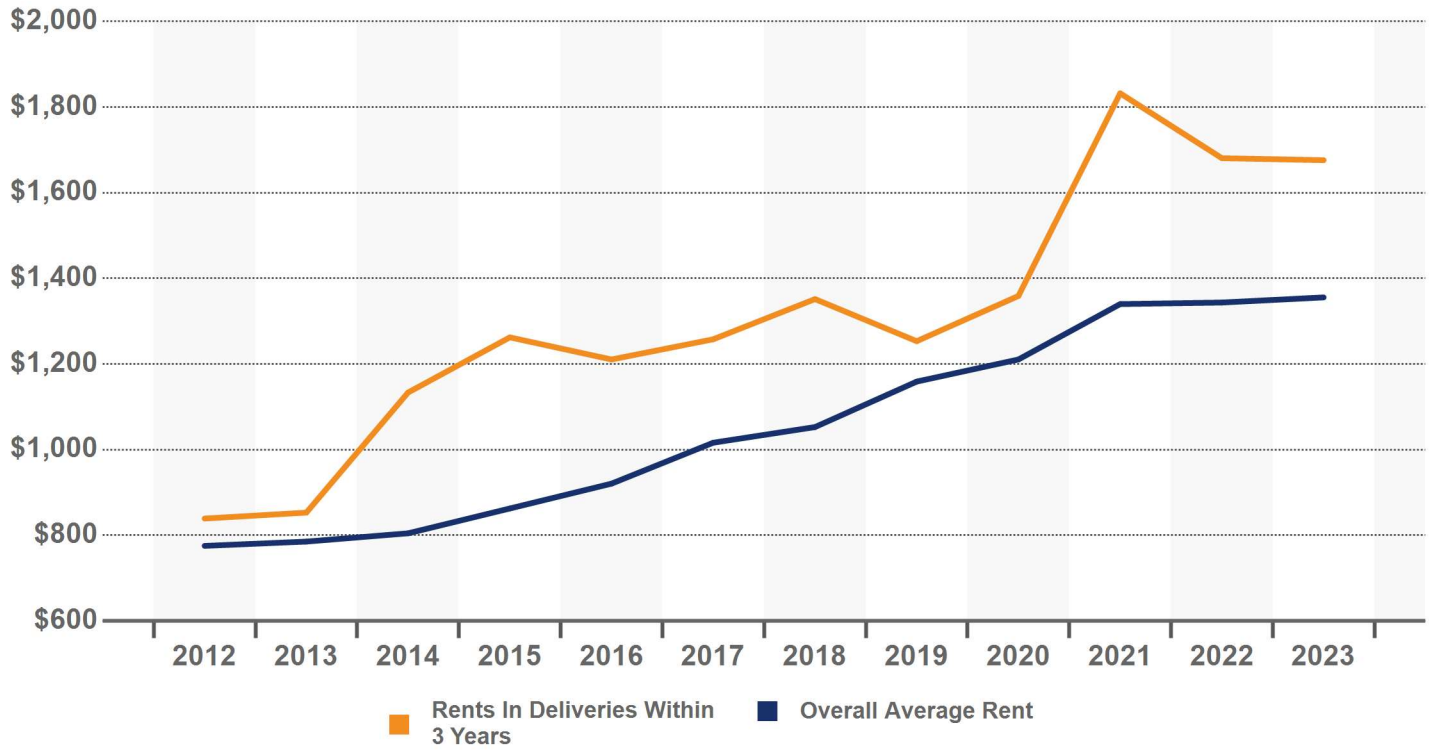

CONCESSIONS IN DELIVERIES PER YEAR

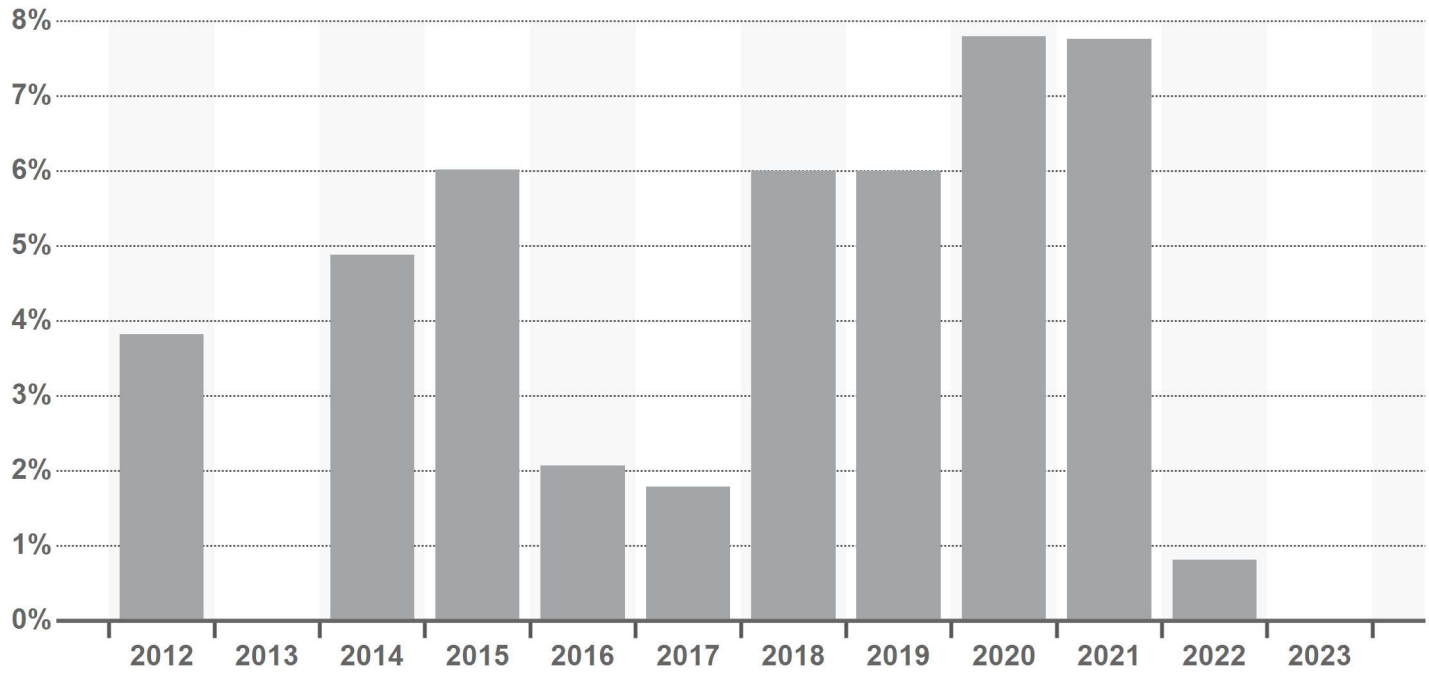

© 2023 CoStar Group - Licensed to Merchants Capital - 1108535



Sale Comparables

1244 Carville Dr

Carville Park Apartments

208 Unit Apartment Building

Reno, Nevada - Northeast Reno Neighborhood

PREPARED BY

MERCHANTS CAPITAL

Blake Barile

MCC Credit Analyst

Sale Comparables Summary

Carville Park Apartments - 1244 Carville Dr

Sale Comparables	Avg. Price/Unit (thous.)	Average Price (mil.)	Average Vacancy at Sale
8	$261	$67.6	5.1%

SALE COMPARABLES LOCATIONS

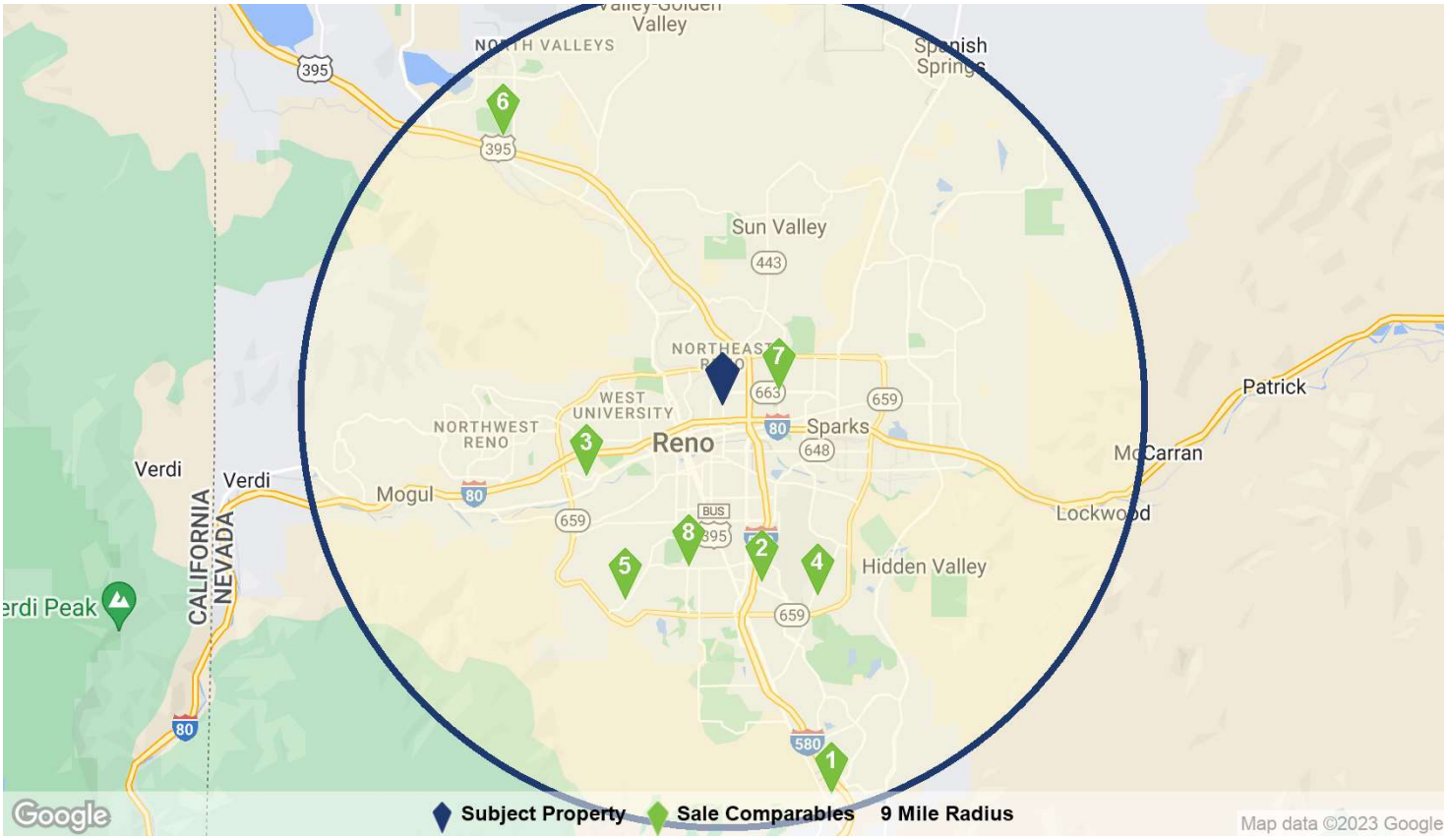

SALE COMPARABLES SUMMARY STATISTICS

Sales Attributes	Low	Average	Median	High
Sale Price	$17,206,000	$67,607,000	$59,450,000	$118,500,000
Price Per Unit	$92,010	$260,779	$264,194	$395,000
Cap Rate	4.6%	4.6%	4.6%	4.6%
Vacancy Rate at Sale	0%	5.1%	4.7%	13.1%
Time Since Sale in Months	5.2	11.7	10.2	24.0
Property Attributes	**Low**	**Average**	**Median**	**High**
Property Size in Units	187	259	260	350
Number of Floors	1	2	3	3
Average Unit SF	24	704	775	980
Year Built	1971	1990	1984	2022
Star Rating	★★☆☆☆	★★☆☆☆ 2.9	★★★☆☆	★★★☆☆

© 2023 CoStar Group - Licensed to Merchants Capital - 1108535

Sale Comparables Summary

Carville Park Apartments - 1244 Carville Dr

	Property Name/Address	Property Information				Sale Information			
		Rating	Yr Built	Units	Vacancy	Sale Date	Price	Price/Unit	Price/SF
1	Integra Peaks 875 Damonte Ranch Pky	★★★☆☆	2022	300	0%	9/2/2022	$118,500,000	$395,000	$593
2	Peaks at the Park 950 Nutmeg Pl	★★☆☆☆	1979	213	13.2%	7/29/2022	$47,000,000	$220,657	$255
3	Apex at Sky Valley 1555 Sky Valley Dr	★★★☆☆	1990	300	4.7%	6/29/2022	$101,250,000	$337,500	$342
4	Lucky Lane Mobile Home Park 3650 Boynton Ln	★★★☆☆	1971	187	4.8%	4/22/2022	$17,206,000	$92,010	$3,824
5	Ascent on Steamboat 3300 Skyline Blvd	★★★☆☆	1973	204	10.3%	3/15/2022	$56,000,000	$274,509	$296
6	Sierra Sage Apartments 6060 Silver Lake Rd	★★★☆☆	1991	232	0%	2/23/2022	$58,900,000	$253,879	$278
7	Parq Crossing 2280 Oddie Blvd	★★★☆☆	2020	288	5.6%	7/26/2021	$82,000,000	$284,722	$427
8	Glen at Hidden Valley 3285 Clover Way	★★★☆☆	1975	350	0.9%	2/9/2021	$60,000,000	$171,428	$252

© 2023 CoStar Group - Licensed to Merchants Capital - 1108535

Sale Comparables

1 Integra Peaks - 875 Damonte Ranch Pky

Reno, NV 89521 - Outer South Reno Neighborhood



SALE		PROPERTY	
Sale Date:	9/2/2022	Property Size:	300 Units, 3 Floors
Sale Price:	$118,500,000	Average Unit Size:	947 SF
Price Per Unit:	$395,000	Year Built:	Nov 2022
Price Per SF:	$593	Vacancy At Sale:	0%
Cap Rate:	-	Parking Spaces:	-

CONTACTS

Buyer:	LDK Ventures
Seller:	Integra Land Company, Panther Residential

FINANCING

$59,300,000 from PCCP, LLC

UNIT MIX AT SALE

			Unit Mix		Vacancy		Avg Asking Rent		Avg Effective Rent		
Bed	Bath	Avg SF	Units	Mix %	Units	Mix %	Per Unit	Per SF	Per Unit	Per SF	Concessions
1	1	665	34	11.3%	-	-	$1,735	$2.61	$1,735	$2.61	0.0%
1	1	683	81	27.0%	-	-	$2,005	$2.94	$2,005	$2.94	0.0%
1	1	736	3	1.0%	-	-	$1,865	$2.53	$1,865	$2.53	0.0%
1	1	801	4	1.3%	-	-	$2,055	$2.57	$2,055	$2.57	0.0%
1	1	802	8	2.7%	-	-	$2,180	$2.72	$2,180	$2.72	0.0%
2	2	1,092	118	39.3%	-	-	$2,125	$1.95	$2,125	$1.95	0.0%
2	2	1,157	16	5.3%	-	-	$2,165	$1.87	$2,165	$1.87	0.0%
2	2	1,204	1	0.3%	-	-	$2,365	$1.96	$2,365	$1.96	0.0%
2	2	1,209	7	2.3%	-	-	$2,265	$1.87	$2,265	$1.87	0.0%
2	2	1,412	7	2.3%	-	-	$2,869	$2.03	$2,869	$2.03	0.0%
3	2	1,304	21	7.0%	-	-	$2,745	$2.10	$2,745	$2.10	0.0%
Totals		947	300	100%	-	-	$2,113	$2.23	$2,113	$2.23	0.0%

SITE AMENITIES

Cabana, Clubhouse, Fitness Center, Pet Play Area, Pet Washing Station, Playground, Pool

UNIT AMENITIES

Air Conditioning, Balcony, Dishwasher, Freezer, Kitchen, Microwave, Oven, Patio, Refrigerator, Stainless Steel Appliances, Vinyl Flooring

TRANSACTION NOTES

On 9/2/2022, the 300-unit multi-family building located at 875 Damonte Ranch Pky Reno, NV was sold for $118,500,000, or $395,000 per unit. Integra Peaks is currently being built on 12.10 acres with completion projected in November 2022.

All information is based on public record filings.

© 2023 CoStar Group - Licensed to Merchants Capital - 1108535

Sale Comparables

2 Peaks at the Park - 950 Nutmeg Pl

Reno, NV 89502 - Convention Center Neighborhood



SALE		PROPERTY	
Sale Date:	7/29/2022	Property Size:	213 Units, 2 Floors
Sale Price:	$47,000,000	Average Unit Size:	775 SF
Price Per Unit:	$220,657	Year Built:	1979
Price Per SF:	$255	Vacancy At Sale:	13.2%
Cap Rate:	-	Parking Spaces:	247 Spaces; 1.2 per Unit

CONTACTS

Buyer:	Four Peaks Capital
Seller:	Mark Abrahams
Buyer Broker:	Marcus & Millichap - Daniel Winrod, Kenneth Blomsterberg, Rya...
Listing Broker:	Marcus & Millichap - Daniel Winrod, Kenneth Blomsterberg, Rya...

FINANCING

$31,466,000 from Berkadia Commercial Mortgage LLC

UNIT MIX AT SALE

			Unit Mix		Vacancy		Avg Asking Rent		Avg Effective Rent		
Bed	Bath	Avg SF	Units	Mix %	Units	Mix %	Per Unit	Per SF	Per Unit	Per SF	Concessions
Studio	1	300	29	13.6%	4	13.8%	$969	$3.23	$959	$3.20	1.0%
1	1	775	56	26.3%	7	12.5%	$1,199	$1.55	$1,187	$1.53	1.0%
2	1	875	120	56.3%	16	13.3%	$1,329	$1.52	$1,316	$1.50	1.0%
3	1	1,000	8	3.8%	1	12.5%	$1,599	$1.60	$1,583	$1.58	1.0%
Totals		775	213	100%	28	13.2%	$1,256	$1.62	$1,243	$1.60	1.0%

SITE AMENITIES

24 Hour Access, Controlled Access, Hearing Impaired Accessible, Individual Locking Bedrooms, Laundry Facilities, Maintenance on site, Online Services, Private Bathroom, Property Manager on Site, Public Transportation, Renters Insurance Program, Tenant Controlled HVAC, Vision Impaired Accessible

UNIT AMENITIES

Air Conditioning, Cable Ready, Carpet, Ceiling Fans, Dishwasher, Disposal, Double Pane Windows, Handrails, Heating, High Speed Internet Access, Ice Maker, Kitchen, Large Bedrooms, Oven, Range, Refrigerator, Tile Floors, Trash Compactor, Tub/Shower, Vinyl Flooring, Walk-In Closets, Warming Drawer, Washer/Dryer Hookup, Wheelchair Accessible (Rooms), Window Coverings

TRANSACTION NOTES

On 7/29/2022, the 213-unit multi-family building located at 950 Nutmeg Pl Reno, NV was sold for $47,000,000, or $220,657 per square foot. Peaks at the Park was built on 5.03 acres in 1979. At the time of the sale the property was 92% occupied.

This transaction was a 1031 exchange. This asset was the downleg. The seller acquired 4005 Moorpark Ct Sparks, NV with the funds from this transaction.

The details of this transaction were confirmed with sources deemed reliable.

© 2023 CoStar Group - Licensed to Merchants Capital - 1108535

Sale Comparables

3 Apex at Sky Valley - 1555 Sky Valley Dr

Reno, NV 89523 - Outer West Reno Neighborhood

★★★☆☆



SALE		PROPERTY	
Sale Date:	6/29/2022	Property Size:	300 Units, 3 Floors
Sale Price:	$101,250,000	Average Unit Size:	980 SF
Price Per Unit:	$337,500	Year Built:	1990
Price Per SF:	$342	Vacancy At Sale:	4.7%
Cap Rate:	-	Parking Spaces:	445 Spaces; 1.5 per Unit

CONTACTS

Buyer:	Benedict Canyon Equities Inc.
Seller:	Ideal Capital Group, Tilden Properties
Buyer Broker:	Marcus & Millichap - Ryan Rife
Listing Broker:	Marcus & Millichap - Alex Tartaglia, Philip Saglimbeni

FINANCING

$8,712,000 from CBRE Loan Services, Inc.: Assumed

UNIT MIX AT SALE

			Unit Mix		Vacancy		Avg Asking Rent		Avg Effective Rent		
Bed	Bath	Avg SF	Units	Mix %	Units	Mix %	Per Unit	Per SF	Per Unit	Per SF	Concessions
1	1	756	72	24.0%	3	4.2%	$1,389	$1.84	$1,389	$1.84	0.0%
2	1	924	52	17.3%	2	3.9%	$1,467	$1.59	$1,467	$1.59	0.0%
2	2	1,066	120	40.0%	6	5.0%	$1,521	$1.43	$1,521	$1.43	0.0%
3	2	1,135	56	18.7%	3	5.4%	$2,063	$1.82	$2,063	$1.82	0.0%
Totals		980	300	100%	14	4.7%	$1,581	$1.61	$1,581	$1.61	0.0%

SITE AMENITIES

Business Center, Clubhouse, Controlled Access, Fitness Center, Furnished Units Available, Gated, Laundry Facilities, Lounge, Maintenance on site, Package Service, Pool, Property Manager on Site, Racquetball Court, Sauna, Spa, Storage Space, Sundeck, Tennis Court

UNIT AMENITIES

Air Conditioning, Balcony, Cable Ready, Carpet, Ceiling Fans, Dining Room, Dishwasher, Disposal, Fireplace, Heating, High Speed Internet Access, Kitchen, Range, Tub/Shower, Vinyl Flooring, Walk-In Closets, Washer/Dryer, Window Coverings

TRANSACTION NOTES

On 6/29/2022, a joint venture between Tilden Properties and Ideal Capital Group sold the 300-unit apartment community at 1555 Sky Valley Dr. in Reno, NV, to Benedict Canyon Equities Inc. for $101,250,000, or approximately $337,500 per unit. The community was formerly known as Silver Ridge.

A buyer assumed a loan in the amount of $8,712,000 from CBRE Loan Services.

Rebranded as Apex at Sky Valley, the property spreads across 13 buildings on 20.6-acres in the Outer West Reno multifamily submarket. The property was approximately 94.8% leased at the time of closing. The unit mix for the property is as follows:

56-three bedroom/two-bath
120-two bedroom/two-bath
52-two bedroom/one-bath
72-one bedroom/one-bath

Information for this comparable report was verified from sources deemed reliable.

© 2023 CoStar Group - Licensed to Merchants Capital - 1108535

Sale Comparables

4 Lucky Lane Mobile Home Park - 3650 Boynton Ln

Reno, NV 89502 - Hidden Valley Neighborhood

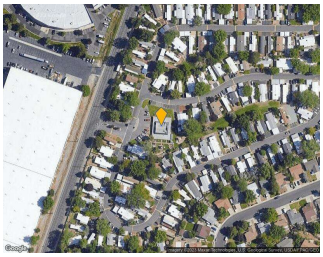

SALE		PROPERTY	
Sale Date:	4/22/2022	Property Size:	187 Units, 1 Floors
Sale Price:	$17,206,000	Average Unit Size:	-
Price Per Unit:	$92,011	Year Built:	1971
Price Per SF:	$3,824	Vacancy At Sale:	4.8%
Cap Rate:	-	Parking Spaces:	150 Spaces; 0.8 per Unit

CONTACTS

Buyer:	Crow Holdings, Legacy Communities LLC
Seller:	PGIM, Inc.

FINANCING

$87,525,000 from Private Lender

UNIT MIX AT SALE

			Unit Mix		Vacancy		Avg Asking Rent		Avg Effective Rent		
Bed	Bath	Avg SF	Units	Mix %	Units	Mix %	Per Unit	Per SF	Per Unit	Per SF	Concessions
1	1	-	187	100%	9	4.8%	-	-	-	-	-
Totals		-	187	100%	9	4.8%	-	-	-	-	-

TRANSACTION NOTES

On 4/22/2022, PGIM Inc sold four mobile home communities to the joint venture Crow Holdings and Legacy Communities LLC for an undisclosed price. The properties total 654 units and are in Colorado, Florida, Nevada, and Virginia.
The communities include:
Pelican Palms Village, a 55+ age-restricted community totaling 286 pads on a 19.5-acre site at 2701 34th St N, St. Petersburg, Florida.
Lucky Lane, an all-age community that features 187 lots on a 22.1-acre site at 3650 Boynton Ln in Reno, Nevada.
Aspen Ridge, a 55+ age-restricted community totaling 108 pads on a 15.83-acre site at 1166 N Madison Ave in Loveland, Colorado
Whitehouse Cove, an all-age community totaling 73 pads on an 11.2-acre site at 105 Rens Rd in Poquoson, Virginia.

© 2023 CoStar Group - Licensed to Merchants Capital - 1108535

5 Ascent on Steamboat - 3300 Skyline Blvd

Reno, NV 89509 - Outer Old Southwest Reno Neighborhood



SALE		PROPERTY	
Sale Date:	3/15/2022	Property Size:	204 Units, 3 Floors
Sale Price:	$56,000,000	Average Unit Size:	896 SF
Price Per Unit:	$274,510	Year Built:	1973
Price Per SF:	$296	Vacancy At Sale:	10.3%
Cap Rate:	-	Parking Spaces:	388 Spaces; 1.9 per Unit

CONTACTS

Buyer:	Eduardo Cerna
Seller:	Eduardo Cerna

FINANCING

$25,350,000 from CBRE Multifamily Capital, Inc: Assumed

UNIT MIX AT SALE

			Unit Mix		Vacancy		Avg Asking Rent		Avg Effective Rent		
Bed	Bath	Avg SF	Units	Mix %	Units	Mix %	Per Unit	Per SF	Per Unit	Per SF	Concessions
1	1	700	72	35.3%	8	11.1%	$1,555	$2.22	$1,555	$2.22	0.0%
2	1	900	56	27.5%	6	10.7%	$1,649	$1.83	$1,649	$1.83	0.0%
2	1	1,000	16	7.8%	2	12.5%	$1,724	$1.72	$1,724	$1.72	0.0%
2	2	1,100	60	29.4%	6	10.0%	$2,075	$1.89	$2,075	$1.89	0.0%
Totals		896	204	100%	21	10.3%	$1,747	$1.95	$1,747	$1.95	0.0%

SITE AMENITIES

Business Center, Clubhouse, Fitness Center, Laundry Facilities, Laundry Service, Maintenance on site, Package Service, Pool, Property Manager on Site, Recycling, Sauna, Storage Space, Sundeck

UNIT AMENITIES

Air Conditioning, Cable Ready, Carpet, Crown Molding, Dining Room, Dishwasher, Disposal, Fireplace, Heating, Kitchen, Microwave, Range, Refrigerator, Tub/Shower, Views, Vinyl Flooring, Walk-In Closets, Washer/Dryer, Window Coverings

TRANSACTION NOTES

Sale was for the 204-unit multifamily community, Ascent on Steamboat. The Class C apartment complex sold for $56,000,000, or about $274,510 per unit. This is a Recapitalization transaction; the ownership remains the same, however the owner took on a new partner. At time of sale the occupancy reported at 89.71%.

The grantee assumed the grantor's loan, having an original loan balance of $25,350,000 from June 17, 2019. Loan documents state: the Note has an unpaid balance of $25,350,000 and prior to default, currently bears an interest rate of 3.68%. The interest only loan is due and payable on July 1, 2026.

Ascent P & E LLC, by Makena Court LLC, by Carna SPE LLC, Eduardo Cerna

Deed Loan Doc Not Available.

© 2023 CoStar Group - Licensed to Merchants Capital - 1108535

Sale Comparables

6 Sierra Sage Apartments - 6060 Silver Lake Rd

Reno, NV 89506 - Outer North Valleys Neighborhood



SALE		PROPERTY	
Sale Date:	2/23/2022	Property Size:	232 Units, 2 Floors
Sale Price:	$58,900,000	Average Unit Size:	909 SF
Price Per Unit:	$253,879	Year Built:	1991
Price Per SF:	$278	Vacancy At Sale:	0%
Cap Rate:	-	Parking Spaces:	343 Spaces; 1.5 per Unit

CONTACTS

Buyer:	MG Properties
Seller:	ERGS, Inc.
Buyer Broker:	Marcus & Millichap - Daniel Winrod, Kenneth Blomsterberg, Rya...
Listing Broker:	Marcus & Millichap - Daniel Winrod, Kenneth Blomsterberg, Rya...

UNIT MIX AT SALE

			Unit Mix		Vacancy		Avg Asking Rent		Avg Effective Rent		
Bed	Bath	Avg SF	Units	Mix %	Units	Mix %	Per Unit	Per SF	Per Unit	Per SF	Concessions
1	1	807	32	13.8%	0	0.0%	$1,358	$1.68	$1,358	$1.68	0.0%
2	2	911	192	82.8%	0	0.0%	$1,487	$1.63	$1,487	$1.63	0.0%
3	2	1,268	8	3.4%	0	0.0%	$1,675	$1.32	$1,675	$1.32	0.0%
Totals		909	232	100%	0	0.0%	$1,476	$1.62	$1,476	$1.62	0.0%

SITE AMENITIES

Business Center, Clubhouse, Fitness Center, On-Site Retail, Planned Social Activities, Playground, Property Manager on Site, Volleyball Court

UNIT AMENITIES

Air Conditioning, Balcony, Ceiling Fans, Dishwasher, Disposal, Heating, Range, Storage Space, Views, Washer/Dryer

TRANSACTION NOTES

This is a portfolio sale between same parties for eight multifamily communities, all located in Reno. A total of 1,085 residential units sold for $302,500,000, an average of $278,801.84 per unit.

The individual multifamily communities sold using six Deeds included:

-Peavine Peak at 30 units sold for $5.3M; Class C, YB 1973
-Silver Lake Apts at 352 units sold for $96.2M; Class B, YB 2003
-Sierra Sage Apts at 232 units sold for $58.9M, Class B, YB 1991
-Vale Apts at 40 units and Vale Townhomes at 16 units sold for $14.15M, Class B, YB 2015
-Oak Manor at 55 units and Angel Street Apts at 8 units sold for $10.75M; Oak Manor Class C, YB 1983; Angel St. Class C, YB 1958
-North Peak Apts at 352 units sold for $117.2M; Class A, YB 2019

Kenneth Blomsterberg of Marcus & Millichap reports that with this acquisition, "the buyer establishes a strong presence in Reno's multifamily market, with a tremendous upside potential that can be captured through value-add renovations across the majority of the assets in the portfolio. Major employers in the region include: Tesla, Apple, Google, Amazon, Blockchain LLC, Switch, and Panasonic. Many of these companies are in the TRI Center, the nation's largest industrial park, located just a short drive from the ERGS Portfolio."

© 2023 CoStar Group - Licensed to Merchants Capital - 1108535

Sale Comparables

7 Parq Crossing - 2280 Oddie Blvd

Sparks, NV 89431 - Outer Sparks Neighborhood



SALE		PROPERTY	
Sale Date:	7/26/2021	Property Size:	288 Units, 3 Floors
Sale Price:	$82,000,000	Average Unit Size:	667 SF
Price Per Unit:	$284,722	Year Built:	Sep 2020
Price Per SF:	$427	Vacancy At Sale:	5.6%
Cap Rate:	-	Parking Spaces:	-

CONTACTS

Buyer:	MG Properties
Seller:	Guardian Capital

FINANCING

$48,800,000 from Key Bank: Acquisition & Development

UNIT MIX AT SALE

			Unit Mix		Vacancy		Avg Asking Rent		Avg Effective Rent		
Bed	Bath	Avg SF	Units	Mix %	Units	Mix %	Per Unit	Per SF	Per Unit	Per SF	Concessions
Studio	1	425	112	38.9%	6	5.4%	$1,190	$2.80	$1,190	$2.80	0.0%
1	1	645	56	19.4%	3	5.4%	$1,377	$2.13	$1,377	$2.13	0.0%
2	2	902	120	41.7%	7	5.8%	$1,612	$1.79	$1,612	$1.79	0.0%
Totals		667	288	100%	16	5.6%	$1,402	$2.10	$1,402	$2.10	0.0%

SITE AMENITIES

24 Hour Access, Conference Rooms, Controlled Access, Courtyard, Fitness Center, Grill, Maintenance on site, Online Services, Pet Play Area, Pet Washing Station, Picnic Area, Property Manager on Site, Wi-Fi

UNIT AMENITIES

Air Conditioning, Carpet, Dishwasher, Hardwood Floors, Heating, Kitchen, Microwave, Oven, Refrigerator, Tub/Shower

TRANSACTION NOTES

The 288-unit Parq Crossing sold for $82,000,000 or about $284,722 per unit. The community was at 96% occupancy at close. We were unable to confirm the cap rate. It was reported that this was a direct deal between seller, Guardian Capital, and buyer, MG Properties Group.

Built in 2020, the property is situated over 7.24 acres and features studio, one- and two-bedroom floorplans. It is located near the I-580, I-80, and U.S. 395, providing access to a number of employment centers throughout the metro including Tahoe-Reno Industrial Center and Reno Technology Park. MG Properties Group owns and manages six other apartment communities in the larger Reno metro area and will be able to enhance management through economies of scale.

Community amenities include 24-hour access, controlled access, fitness center, Grilling areas, pet play area and washing station as well as onsite management and maintenance.

© 2023 CoStar Group - Licensed to Merchants Capital - 1108535

Sale Comparables

8 Glen at Hidden Valley - 3285 Clover Way

Reno, NV 89509 - Virginia Lake Neighborhood



SALE		PROPERTY	
Sale Date:	2/9/2021	Property Size:	348 Units, 3 Floors
Sale Price:	$60,000,000	Average Unit Size:	678 SF
Price Per Unit:	$171,429	Year Built:	1975
Price Per SF:	$252	Vacancy At Sale:	0.9%
Cap Rate:	4.6%	Parking Spaces:	370 Spaces; 1.1 per Unit

CONTACTS

Buyer:	Priderock Capital Partners, LLC
Seller:	Haley Associates Limited Partnership
Listing Broker:	Marcus & Millichap - Daniel Winrod, Kenneth Blomsterberg, Rya...

UNIT MIX AT SALE

			Unit Mix		Vacancy		Avg Asking Rent		Avg Effective Rent		
Bed	Bath	Avg SF	Units	Mix %	Units	Mix %	Per Unit	Per SF	Per Unit	Per SF	Concessions
Studio	1	450	60	17.2%	1	1.7%	$969	$2.15	$943	$2.10	2.7%
1	1	650	195	56.0%	2	1.0%	$1,033	$1.59	$1,011	$1.55	2.2%
1	1	750	10	2.9%	0	0.0%	$255	$0.34	$249	$0.33	2.2%
2	1	850	38	10.9%	0	0.0%	$1,219	$1.43	$1,194	$1.40	2.1%
2	2	950	45	12.9%	0	0.0%	$1,259	$1.33	$1,233	$1.30	2.1%
Totals		679	348	100%	3	0.9%	$1,049	$1.55	$1,026	$1.51	2.2%

SITE AMENITIES

Controlled Access, Elevator, Grill, Laundry Facilities, Picnic Area, Spa

UNIT AMENITIES

Air Conditioning, Balcony, Carpet, Den, Dishwasher, Disposal, Heating, Kitchen, Refrigerator, Storage Space, Vaulted Ceiling, Views, Wheelchair Accessible (Rooms)

TRANSACTION NOTES

Priderock Capital Partners has acquired Sundance West Apartments from Haley Associates LP on February 9, 2021 for a confirmed sale price of $60 million or about $171,429 per unit or about $252 psf. The asset was re branded to Glen at Hidden Valley.

Glen at Hidden Valley comprised of 350 unit with NRSF 238,095 sf built in 1975 and situated on about 7.6 acre. The asset was about 97.4% occupied at the time of sale. Broker provided 4.6% going in cap rate & 5.11% proforma cap rate, incremental value add. The seller acquired the asset in 2015 for $23.45 million or about 155% return on investment. During the Seller's ownership $5M was invested on capex improvements. All 350 units were renovated. Sellers spent $2M on interior capex per broker.

Listing price was $57 million.

© 2023 CoStar Group - Licensed to Merchants Capital - 1108535

Sales Volume

RENO METRO SALES VOLUME IN UNITS

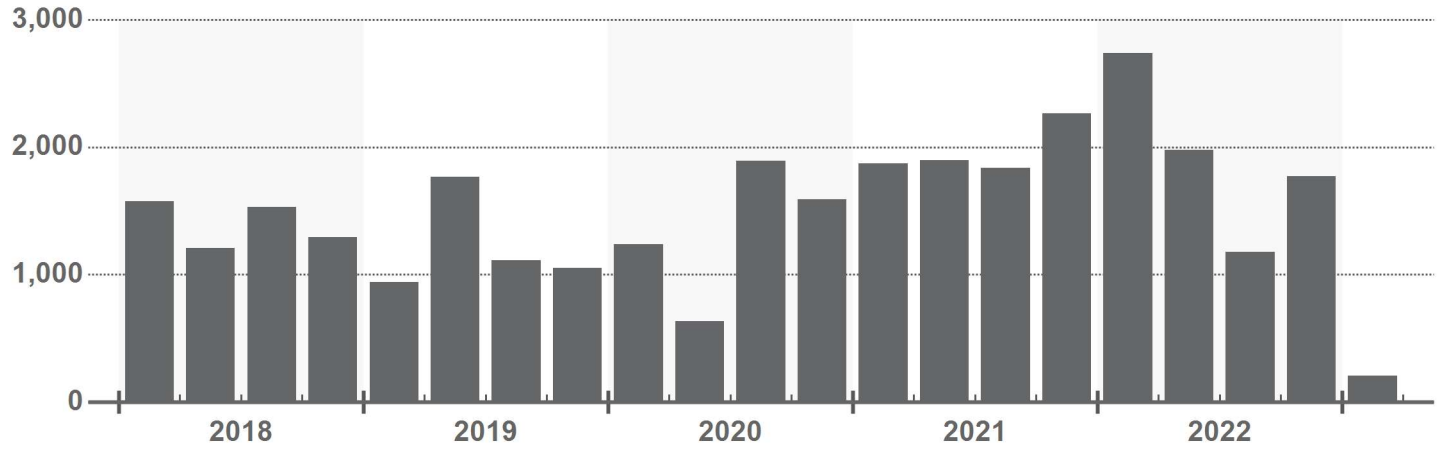

UNIVERSITY SUBMARKET SALES VOLUME IN UNITS

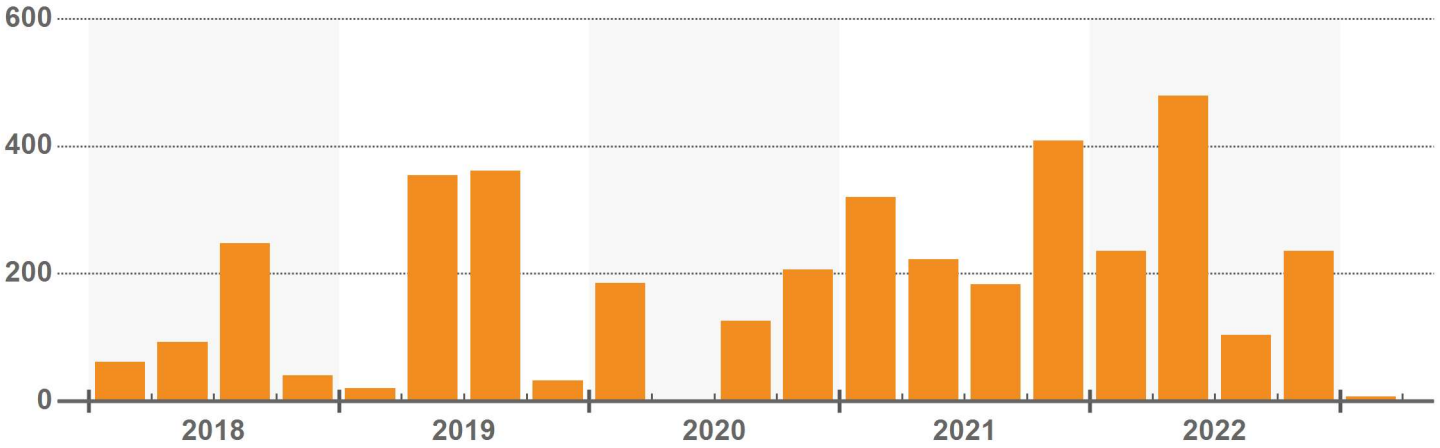

NORTHEAST RENO NEIGHBORHOOD SALES VOLUME IN UNITS

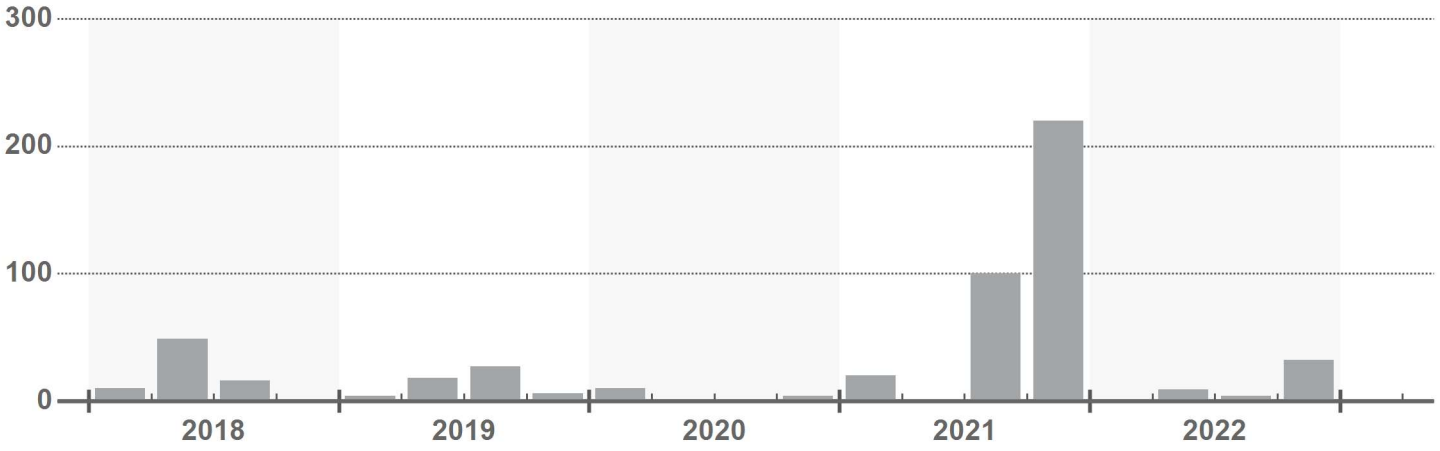

© 2023 CoStar Group - Licensed to Merchants Capital - 1108535

Sales Pricing

NATIONAL PRICE INDICES

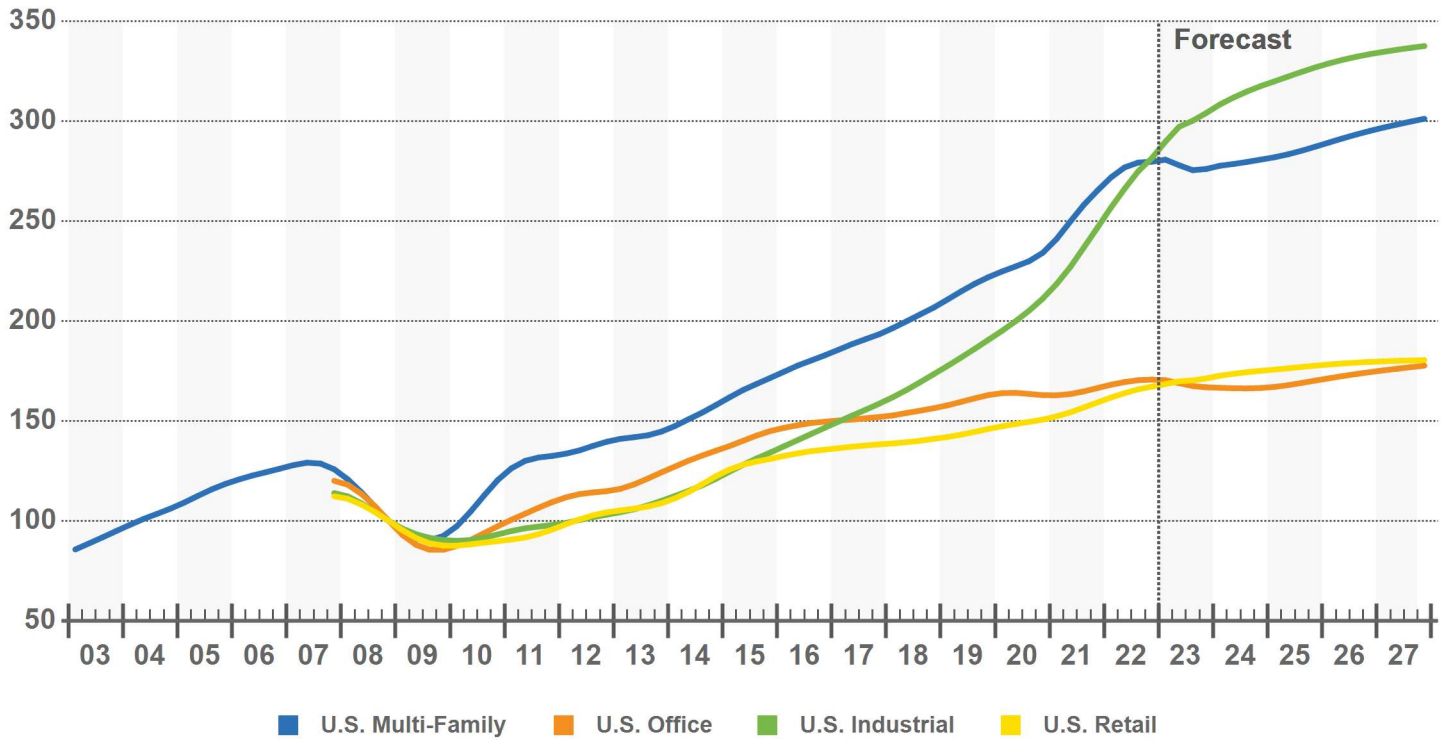

REGIONAL MULTI-FAMILY PRICE INDICES

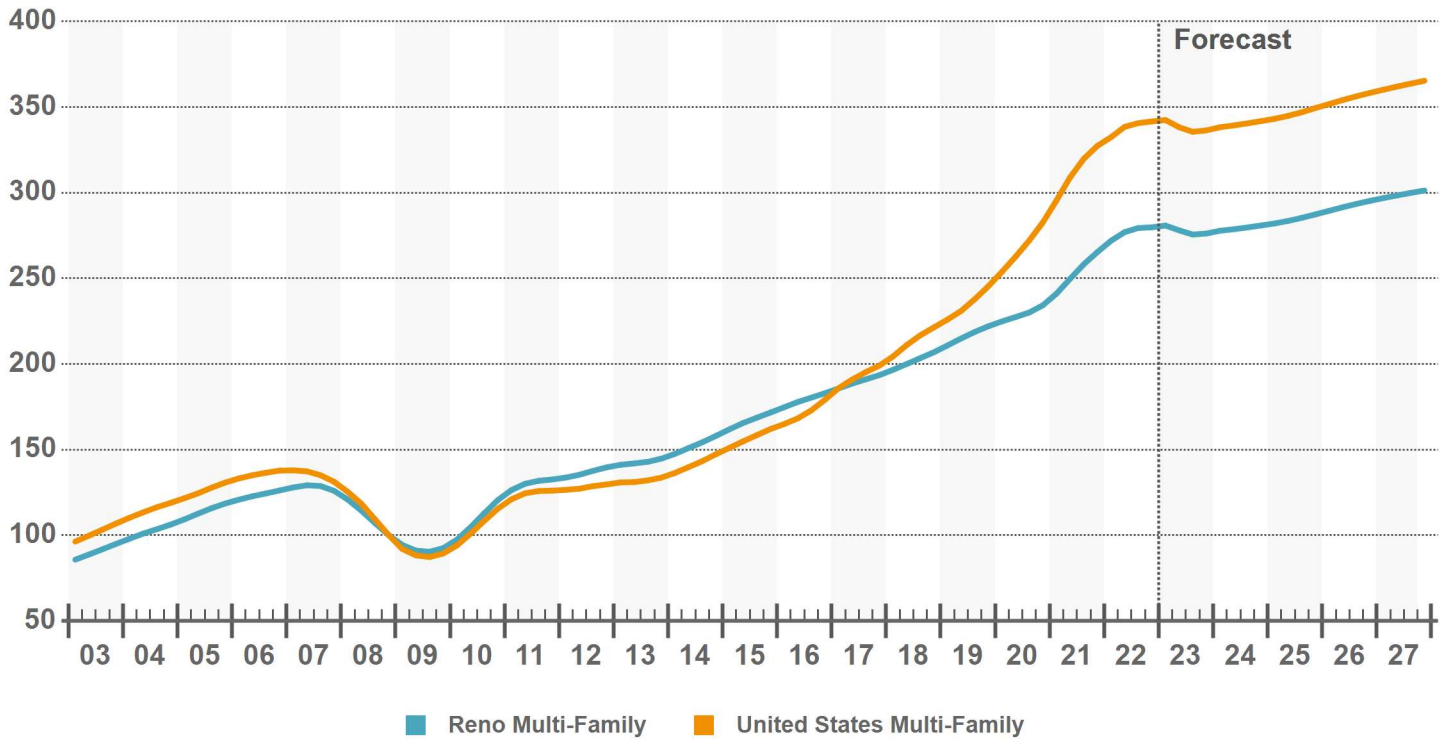

© 2023 CoStar Group - Licensed to Merchants Capital - 1108535

Sales Pricing

PRICE PER UNIT TRENDS

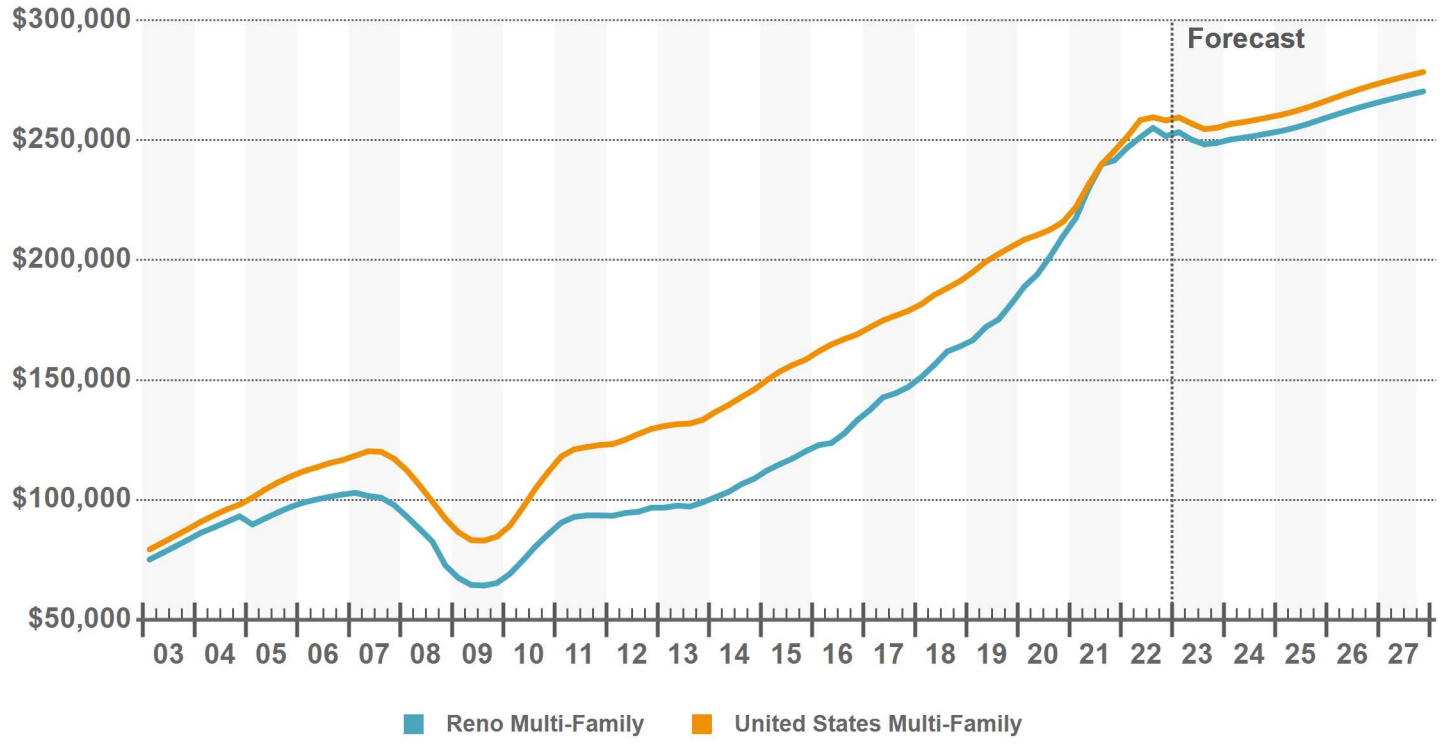

UNITED STATES SALE PRICE PER UNIT DISTRIBUTION PAST 12 MONTHS

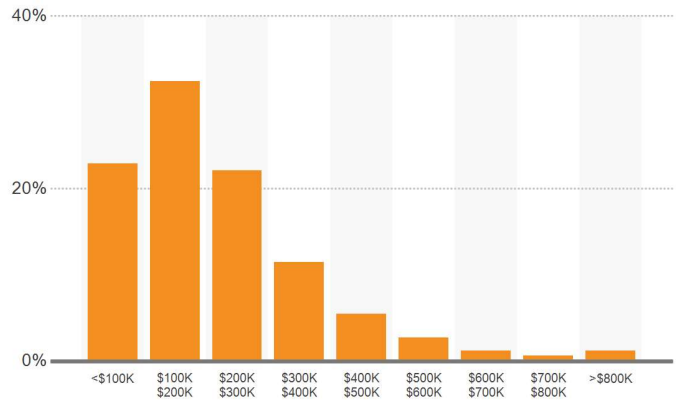

RENO SALE PRICE PER UNIT DISTRIBUTION PAST 12 MONTHS

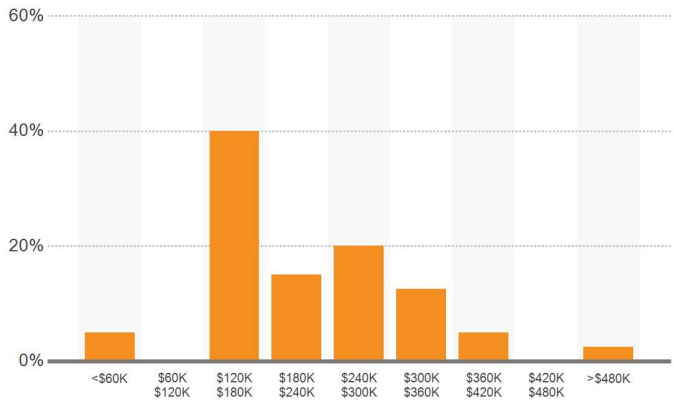

PRICE PER UNIT SUMMARY FOR SALES IN PAST YEAR

Geography	Transactions	Low	Bottom 25%	Median	Average	Top 25%	High
United States	19,771	$5,076	$67,493	$185,000	$227,432	$491,449	$16,047,297
Reno	65	$52,500	$100,163	$170,635	$277,081	$344,321	$593,750
University	11	$99,193	$126,092	$170,635	$335,638	$340,956	$458,333
Northeast Reno	4	$127,367	$127,367	$152,811	$153,193	$181,250	$181,250
Selected Sale Comps	8	$92,010	$131,719	$264,194	$260,779	$366,250	$395,000

© 2023 CoStar Group - Licensed to Merchants Capital - 1108535

Cap Rates

MARKET CAP RATE

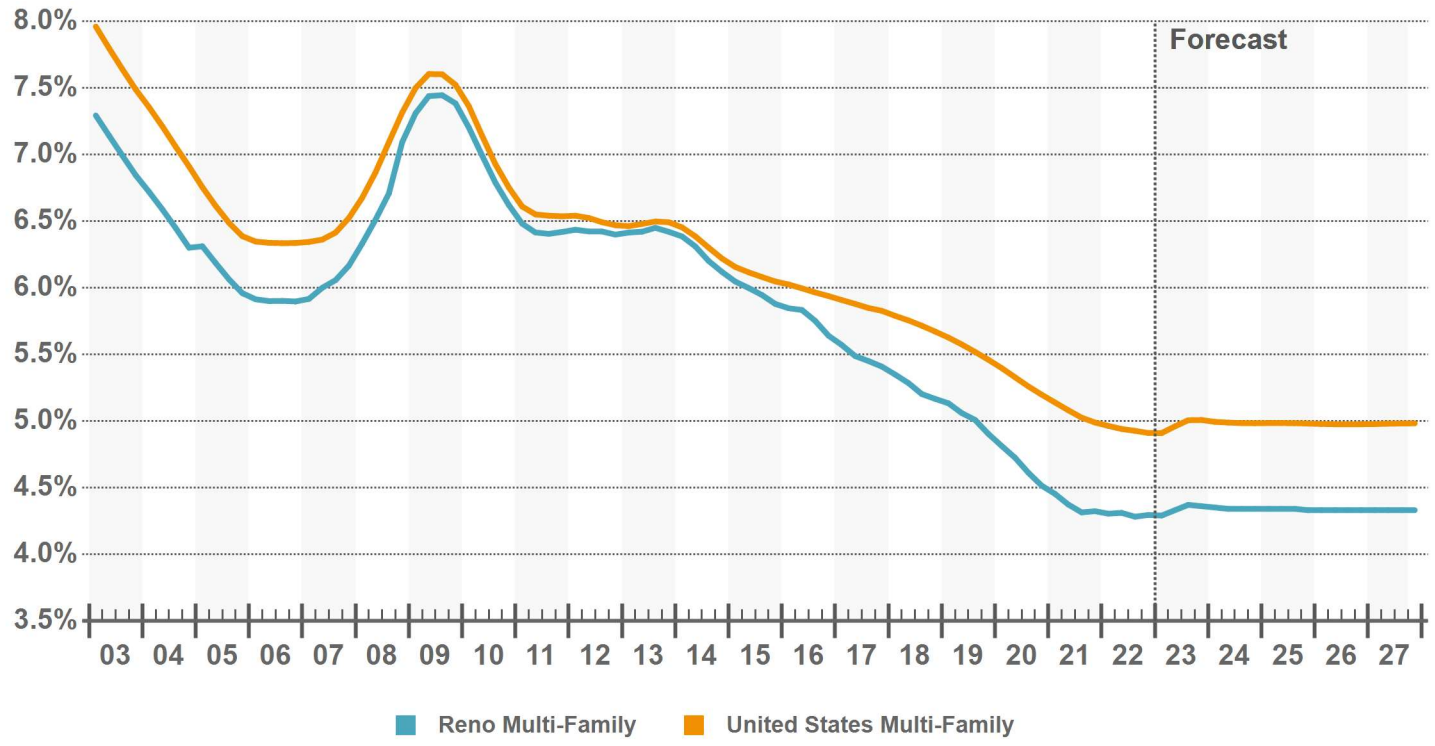

UNITED STATES CAP RATE DISTRIBUTION PAST 12 MONTHS

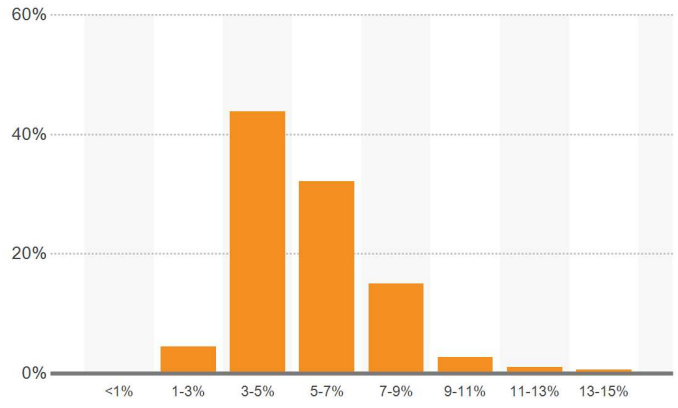

RENO CAP RATE DISTRIBUTION PAST 12 MONTHS

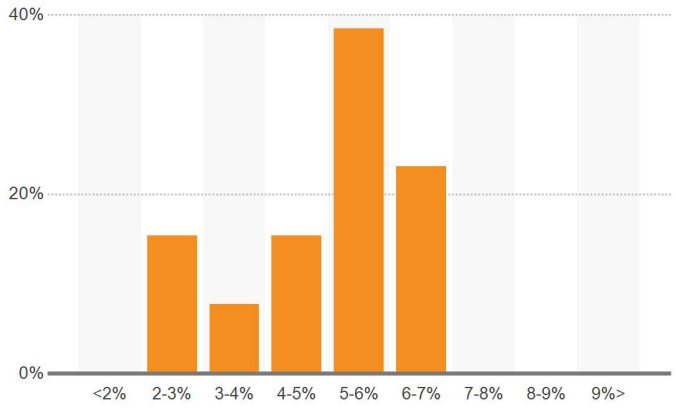

CAP RATE SUMMARY STATISTICS IN PAST YEAR

Geography	Transactions	Low	Bottom 25%	Median	Average	Top 25%	High
United States	6,739	1.0%	3.3%	5.0%	5.3%	7.9%	25.0%
Reno	15	4.0%	4.0%	5.1%	5.2%	6.4%	6.8%
University	2	4.9%	N/A	5.9%	5.9%	N/A	6.8%
Northeast Reno	1	4.9%	N/A	4.9%	4.9%	N/A	4.9%
Selected Sale Comps	1	4.6%	N/A	4.6%	4.6%	N/A	4.6%

© 2023 CoStar Group - Licensed to Merchants Capital - 1108535

Buyers

TOP RENO MULTIFAMILY BUYERS PAST TWO YEARS

	Properties Bought			Properties Sold		
Company Name	Bldgs	Units	Volume	Bldgs	Units	Volume
MG Properties	10	1,488	$410,292,532	1	115	$25,792,532
Tilden Properties	3	580	$215,300,000	1	300	$101,250,000
Benedict Canyon Equities Inc.	2	394	$129,250,000	0	0	-
LDK Capital, LLC	2	644	$118,500,000	0	0	-
Northland	1	330	$100,000,000	0	0	-
Blackstone Inc.	1	186	$89,000,000	1	128	$13,000,000
Landmark Properties	1	186	$89,000,000	0	0	-
Herzog Real Estate Development Services Inc	1	264	$88,000,000	1	300	$101,250,000
Green Leaf Partners Management	1	192	$88,000,000	0	0	-
Fenway Properties	2	420	$75,450,000	0	0	-
Kennedy Wilson, Inc.	1	220	$66,000,000	0	0	-
Priderock Capital Partners, LLC	1	350	$60,000,000	0	0	-
Eduardo Cerna	1	204	$56,000,000	1	204	$56,000,000
Mark Abrahams	1	250	$52,250,000	1	213	$47,000,000
Academy West Investments	2	142	$51,000,000	2	142	$51,000,000
Four Peaks Capital	1	213	$47,000,000	0	0	-
Veneto Capital Management	1	268	$40,000,000	0	0	-
The Bascom Group	1	147	$31,000,000	0	0	-
Helix Electric, Inc.	1	115	$25,792,532	0	0	-
Jesse Biegel	5	118	$22,550,000	0	0	-
Bernard Xavier	4	95	$17,000,000	0	0	-
Eric Leimbach	2	97	$15,463,000	0	0	-
Bryan Graves	1	84	$14,250,000	0	0	-
RCMI	1	161	$14,000,000	0	0	-
Peak Capital Partners	1	128	$13,000,000	1	128	$13,000,000

Purchased at least one asset in University Multi-Family submarket

TYPES OF MULTIFAMILY RENO BUYERS PAST TWO YEARS

	Buying Volume				Average Purchase	
Company Type	Bldgs	Units	Billions		Price/Unit	Avg Price
Private	136	7,468		$1.75	$234,070	$12,853,227
Private Equity	4	727		$0.25	$342,847	$62,312,500
Institutional	3	623		$0.10	$163,603	$33,975,000
REIT/Public	0	0		-	-	-

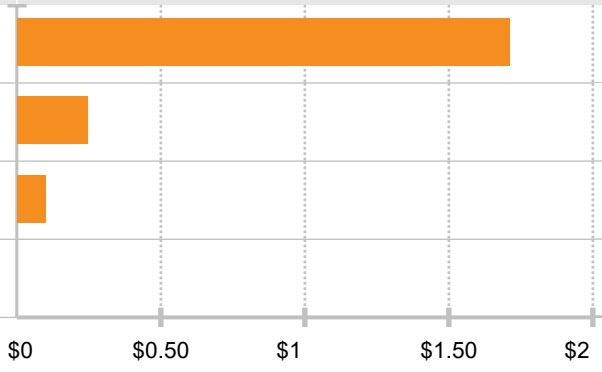

© 2023 CoStar Group - Licensed to Merchants Capital - 1108535

Sellers

TOP RENO MULTIFAMILY SELLERS PAST TWO YEARS

	Properties Sold			Properties Bought		
Company Name	Bldgs	Units	Volume	Bldgs	Units	Volume
ERGS, Inc.	8	1,085	$302,500,000	0	0	-
Integra Land Company	1	300	$118,500,000	0	0	-
Panther Residential	1	300	$118,500,000	0	0	-
Herzog Real Estate Development Services Inc	1	300	$101,250,000	1	264	$88,000,000
Tilden Properties	1	300	$101,250,000	3	580	$215,300,000
Sunroad Holding Corporation	1	330	$100,000,000	0	0	-
SmartStop Asset Management	1	186	$89,000,000	0	0	-
JP DiNapoli Companies	1	264	$88,000,000	0	0	-
Angelo, Gordon & Co.	1	192	$88,000,000	0	0	-
Horizon Realty Advisors	1	192	$88,000,000	0	0	-
Guardian Capital	1	288	$82,000,000	0	0	-
Nimes Real Estate	1	216	$79,800,000	0	0	-
Eduardo Cerna	2	365	$70,000,000	1	204	$56,000,000
Seagate Properties	1	220	$66,000,000	0	0	-
Gaston & Wilkerson	1	300	$64,250,000	0	0	-
Haley Associates Limited Partnership	1	350	$60,000,000	0	0	-
Investors Capital Group	1	250	$52,250,000	0	0	-
Academy West Investments	2	142	$51,000,000	2	142	$51,000,000
Blue Vista	2	142	$51,000,000	0	0	-
CA Management Services	1	100	$47,500,000	0	0	-
Lincoln Avenue Capital	1	332	$47,000,000	0	0	-
Mark Abrahams	1	213	$47,000,000	1	250	$52,250,000
Robert F Nielsen	1	268	$40,000,000	0	0	-
Martin J. Wohnlich	1	147	$31,000,000	0	0	-
Landcap Investment Partners	1	94	$28,000,000	0	0	-

Sold at least one asset in University Multi-Family submarket

TYPES OF MULTIFAMILY RENO SELLERS PAST TWO YEARS

	Selling Volume			Average Sale	
Company Type	Bldgs	Units	Billions	Price/Unit	Avg Price
Private	154	8,118	$1.91	$235,453	$12,411,783
Institutional	7	1,172	$0.39	$331,484	$55,500,000
Private Equity	3	544	$0.10	$188,970	$34,266,666
REIT/Public	0	0	-	-	-

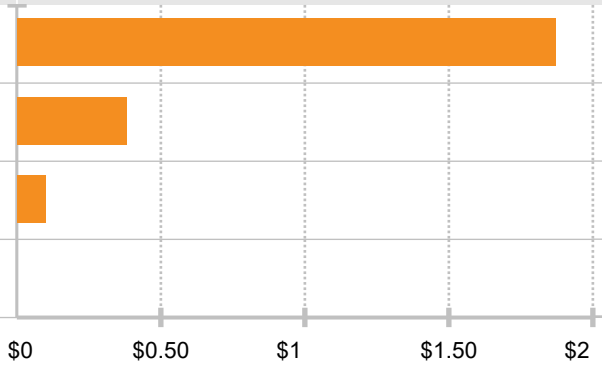

© 2023 CoStar Group - Licensed to Merchants Capital - 1108535



Demographics

1244 Carville Dr - Carville Park Apart...

76,128 SF Multi-Family Building

PREPARED BY

MERCHANTS CAPITAL

Blake Barile

MCC Credit Analyst

Demographic Overview

1244 Carville Dr

Population (1 mi)	Avg. HH Size (1 mi)	Avg. Age (1 mi)	Med. HH Inc. (1 mi)
21,116	2.5	37	$32,399

DEMOGRAPHIC RADIUS RINGS

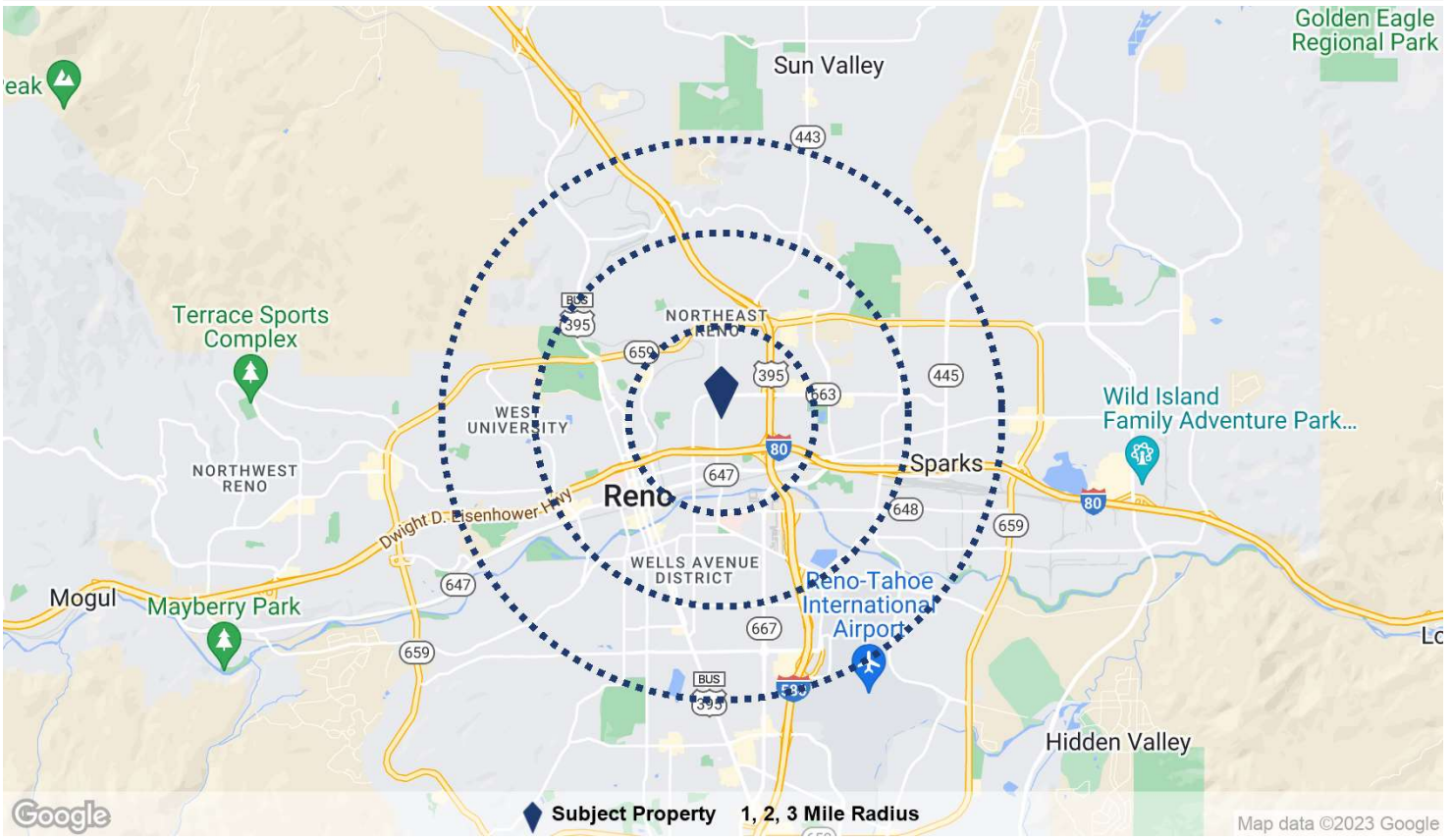

DEMOGRAPHIC SUMMARY

Population	1 Mile	2 Mile	3 Mile
2022 Population	21,116	75,145	127,418
2027 Population	22,870	82,099	138,820
Pop Growth 2022-2027	8.3%	9.3%	9.0%
2022 Average Age	37	38	39
Households			
2022 Households	8,135	30,617	51,766
2027 Households	8,825	33,538	56,576
Household Growth 2022-2027	8.5%	9.5%	9.3%
Median Household Income	$32,399	$42,614	$47,391
Average Household Size	2.5	2.4	2.4
Average HH Vehicles	1	1	2
Housing			
Median Home Value	$254,322	$292,746	$312,267
Median Year Built	1975	1977	1973

© 2023 CoStar Group - Licensed to Merchants Capital - 1108535

Age & Education

POPULATION BY AGE GROUP IN 1 MILE RADIUS

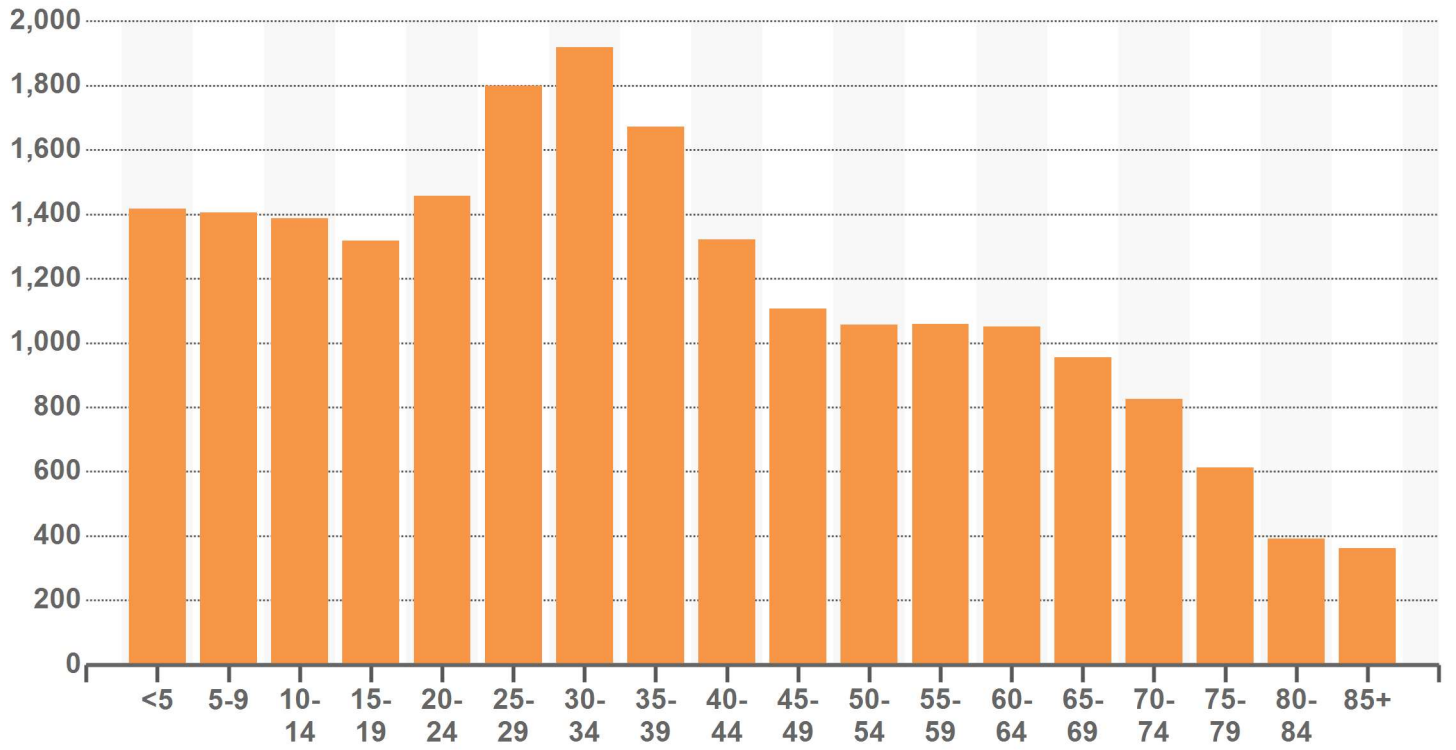

POPULATION BY AGE IN 1 MILE RADIUS

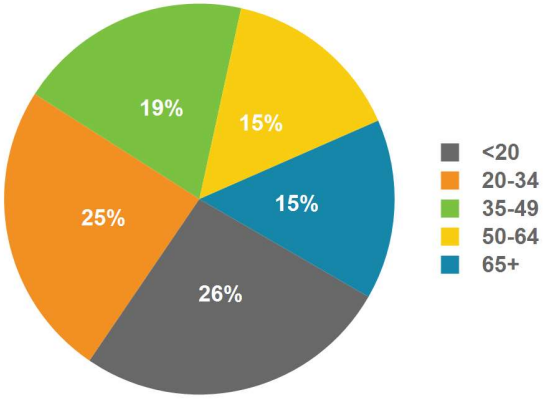

POPULATION BY EDUCATION IN 1 MILE RADIUS

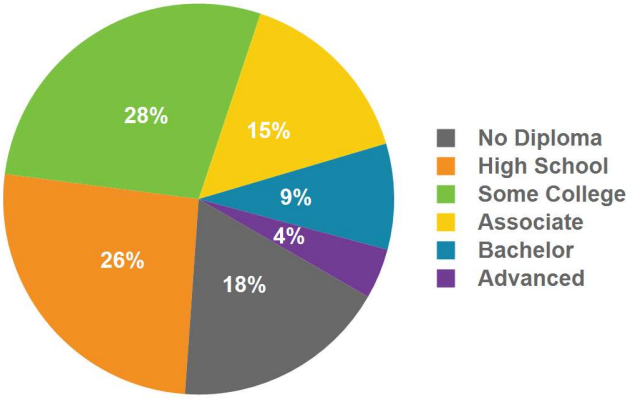

© 2023 CoStar Group - Licensed to Merchants Capital - 1108535

Ethnicity

POPULATION BY RACE

	2023 Population					
Race	1 Mile		2 Mile		3 Mile	
White	15,905	75.32%	58,904	78.39%	103,591	81.30%
Black	1,518	7.19%	3,970	5.28%	5,573	4.37%
Asian	1,582	7.49%	5,446	7.25%	7,772	6.10%
American Indian & Alaskan	605	2.87%	2,362	3.14%	3,543	2.78%
Hawaiian & Pacific Islander	461	2.18%	1,082	1.44%	1,536	1.21%
Other	1,045	4.95%	3,381	4.50%	5,402	4.24%



POPULATION BY RACE IN 1 MILE RADIUS

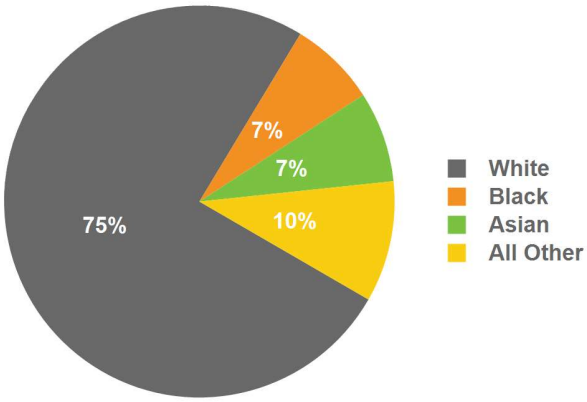

HISPANIC POPULATION IN 1 MILE RADIUS

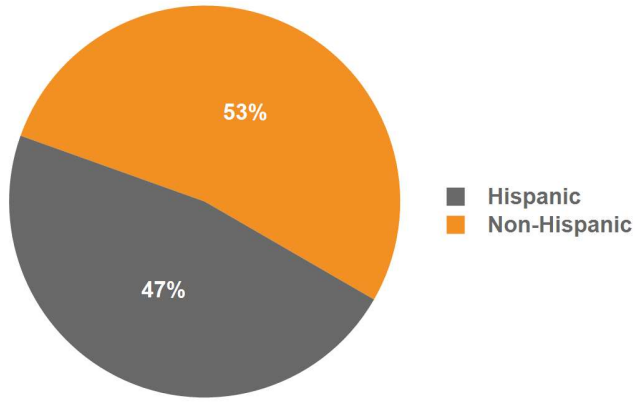

MILITARY POPULATION

	2023 Population					
	1 Mile		2 Mile		3 Mile	
Military	0	0.00%	15	< 1%	46	< 1%
Non-Military Workforce	9,463	100.00%	36,333	99.96%	63,361	99.93%



© 2023 CoStar Group - Licensed to Merchants Capital - 1108535



Multi-Family Submarket Report

University

Reno - NV

PREPARED BY

MERCHANTS CAPITAL

Blake Barile

MCC Credit Analyst

CoStar™

Overview

University Multi-Family

12 Mo. Delivered Units	12 Mo. Absorption Units	Vacancy Rate	12 Mo. Asking Rent Growth
348	99	9.3%	-1.2%

The vacancy rate in the University Submarket has expanded significantly over the past year, and at 9.3%, is above the long-term average.

About 350 units have came on line over the past year, far outpacing the five-year average. Development is set to continue, as roughly 610 units are underway, which will substantially expand the existing inventory. Rents have declined by 1.2% over the past year, which is the worst annual performance recorded here in more than 10 years.

Investors have been active in the University Submarket over the past three years. The market price, which is an estimated price of all properties in the submarket, has risen dramatically over that time period and now stands at $229,252/unit.

KEY INDICATORS

Current Quarter	Units	Vacancy Rate	Asking Rent	Effective Rent	Absorption Units	Delivered Units	Under Constr Units
4 & 5 Star	811	27.4%	$1,736	$1,688	20	0	232
3 Star	1,214	7.8%	$1,471	$1,463	4	0	378
1 & 2 Star	2,276	3.6%	$979	$976	4	0	0
Submarket	4,301	9.3%	$1,282	$1,268	28	0	610

Annual Trends	12 Month	Historical Average	Forecast Average	Peak	When	Trough	When
Vacancy Change (YOY)	5.5%	5.3%	9.8%	12.0%	2009 Q4	1.7%	2021 Q2
Absorption Units	99	33	189	309	2015 Q3	(51)	2009 Q3
Delivered Units	348	43	193	398	2022 Q4	0	2021 Q4
Demolished Units	0	0	2	5	2016 Q1	0	2022 Q4
Asking Rent Growth (YOY)	-1.2%	3.0%	1.3%	9.5%	2021 Q3	-6.8%	2009 Q4
Effective Rent Growth (YOY)	-2.1%	3.0%	1.3%	9.5%	2021 Q3	-7.4%	2009 Q4
Sales Volume	$23M	$12.7M	N/A	$82.1M	2022 Q3	$0	2010 Q1

© 2023 CoStar Group - Licensed to Merchants Capital - 1108535

Vacancy

ABSORPTION, NET DELIVERIES & VACANCY

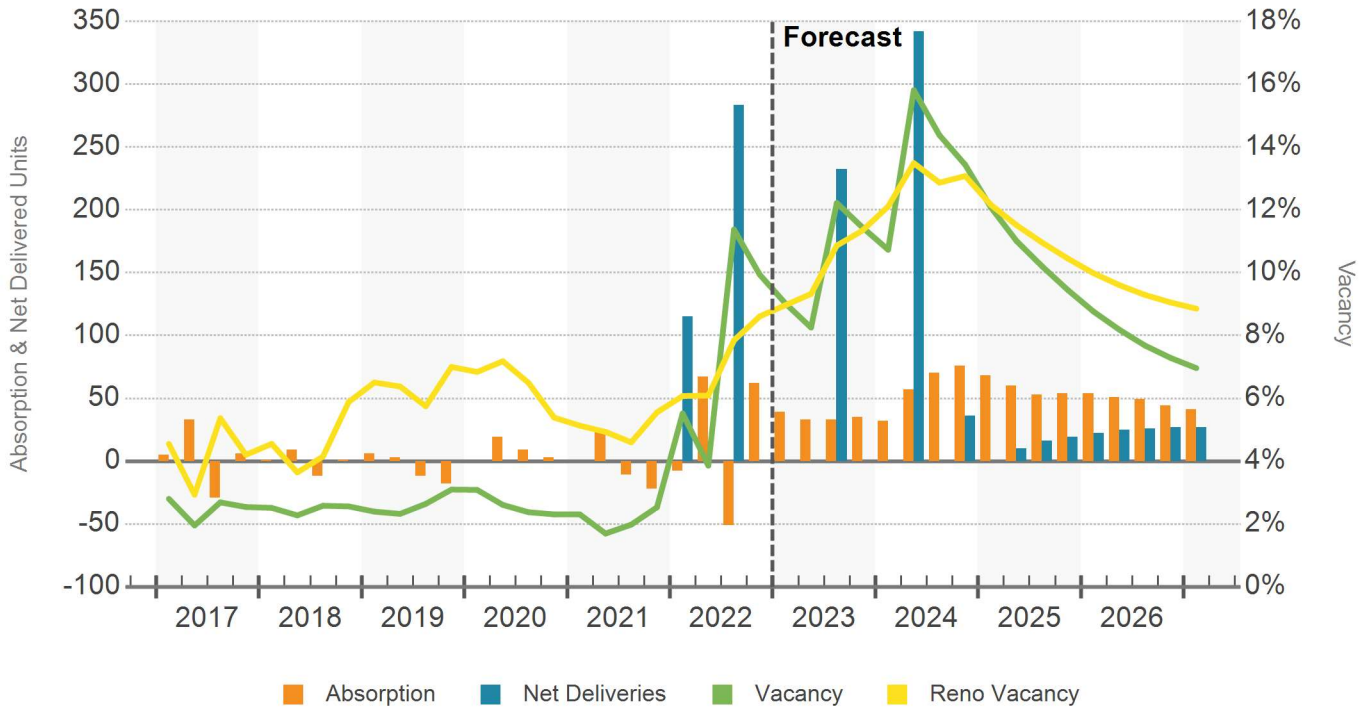

OVERALL & STABILIZED VACANCY

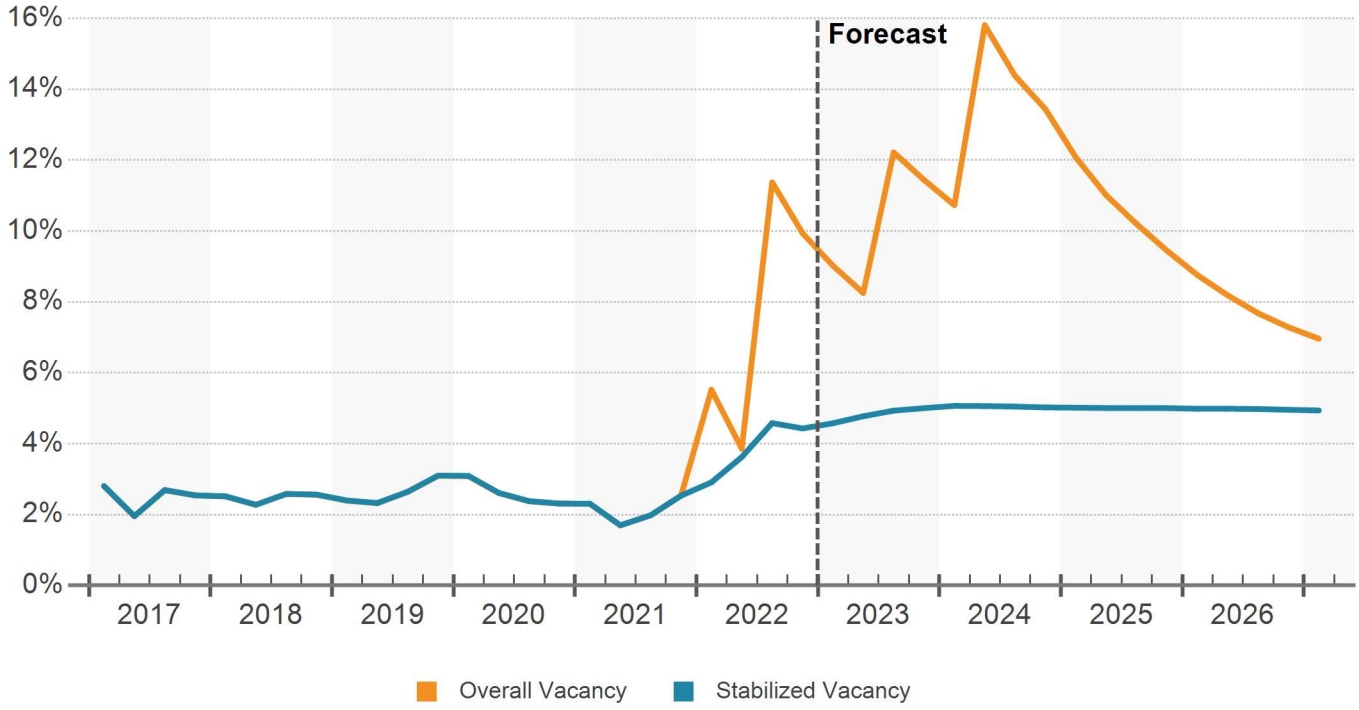

© 2023 CoStar Group - Licensed to Merchants Capital - 1108535

Vacancy

VACANCY RATE

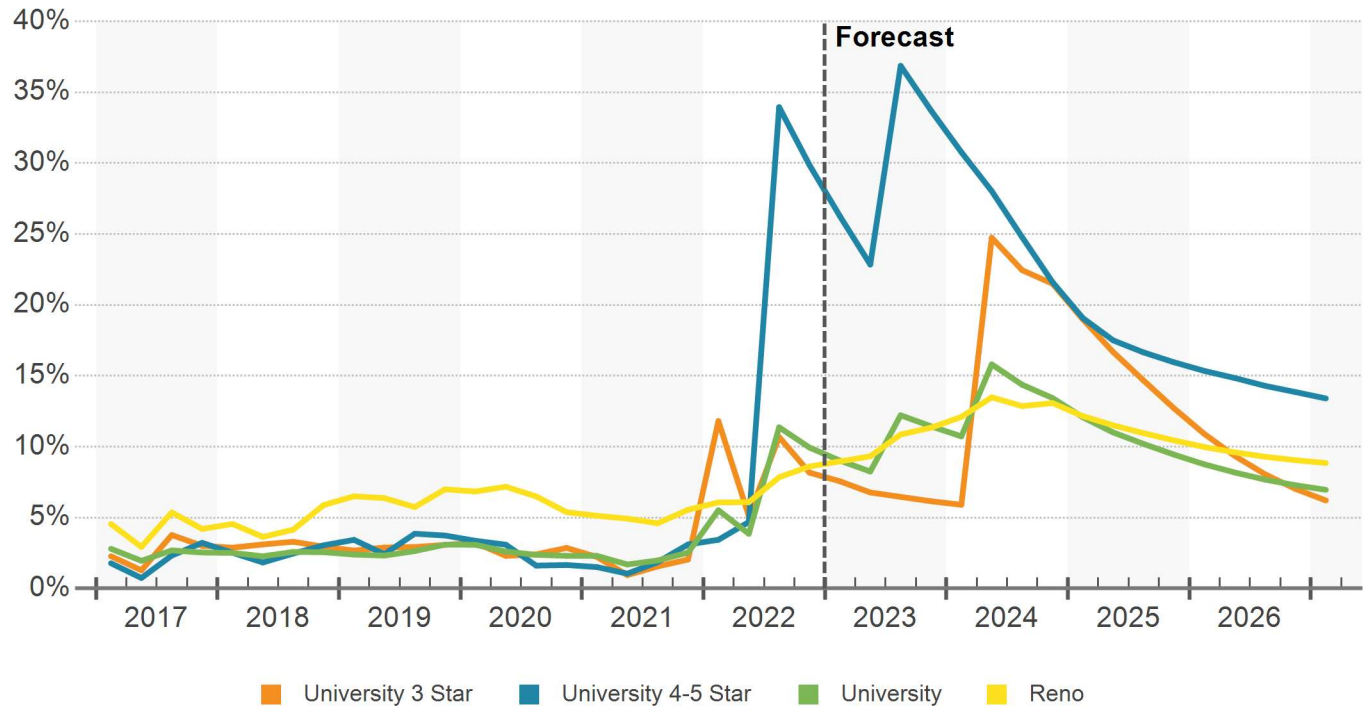

VACANCY BY BEDROOM

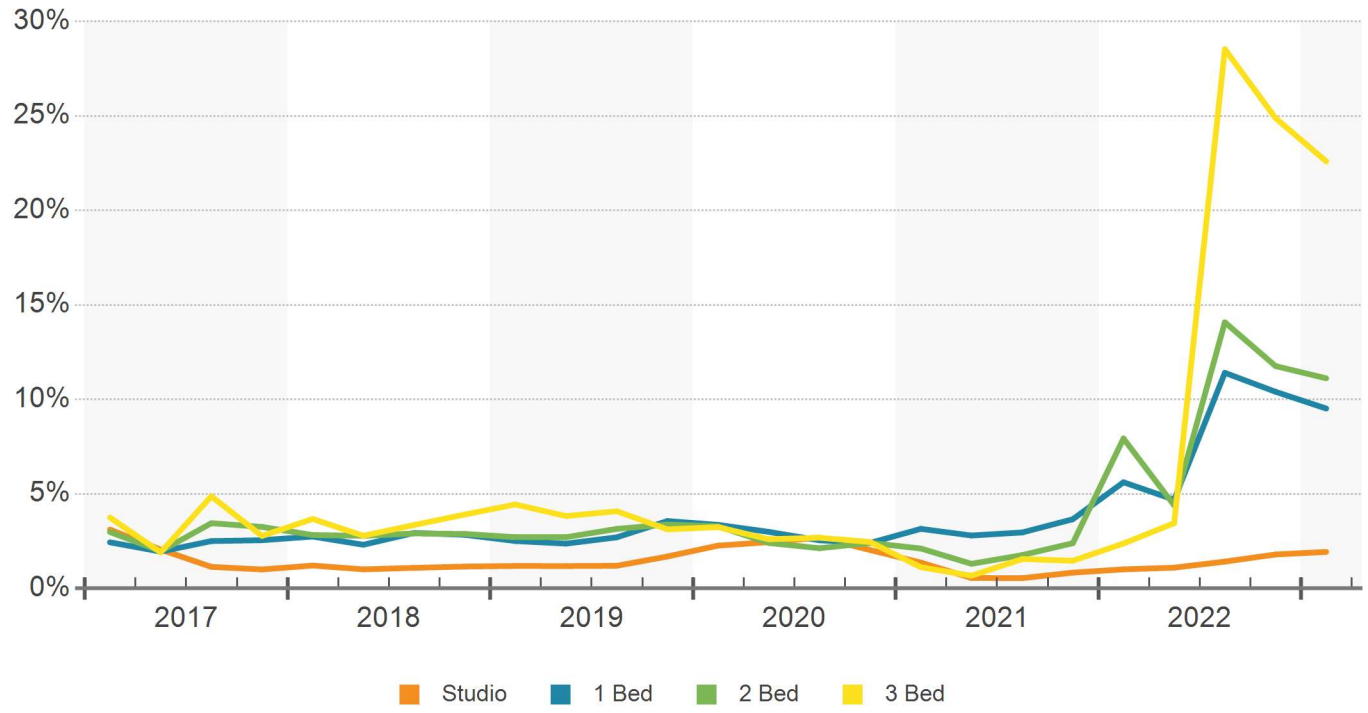

© 2023 CoStar Group - Licensed to Merchants Capital - 1108535

Rent

Renters should be able to find apartments in the University Submarket at somewhat of a discount to other parts of the Reno metro. The average apartment here runs for $1,280/month, moderately below the $1,510/month metro-wide average.

It's a moderately favorable leasing environment for renters in the submarket. Concessions are somewhat common, although by no means outsized.

Rents in the submarket fell by 1.2% year over year as of 2023Q1, a notable deterioration from the 4.6% three-year annual rent growth average.

University has experienced transformative levels of rent growth over the past decade. Apartment rents today are 60.4% higher than they were 10 years ago, which notably falls a few percentage points short of the corresponding increase in the Reno metro.

DAILY ASKING RENT PER SF

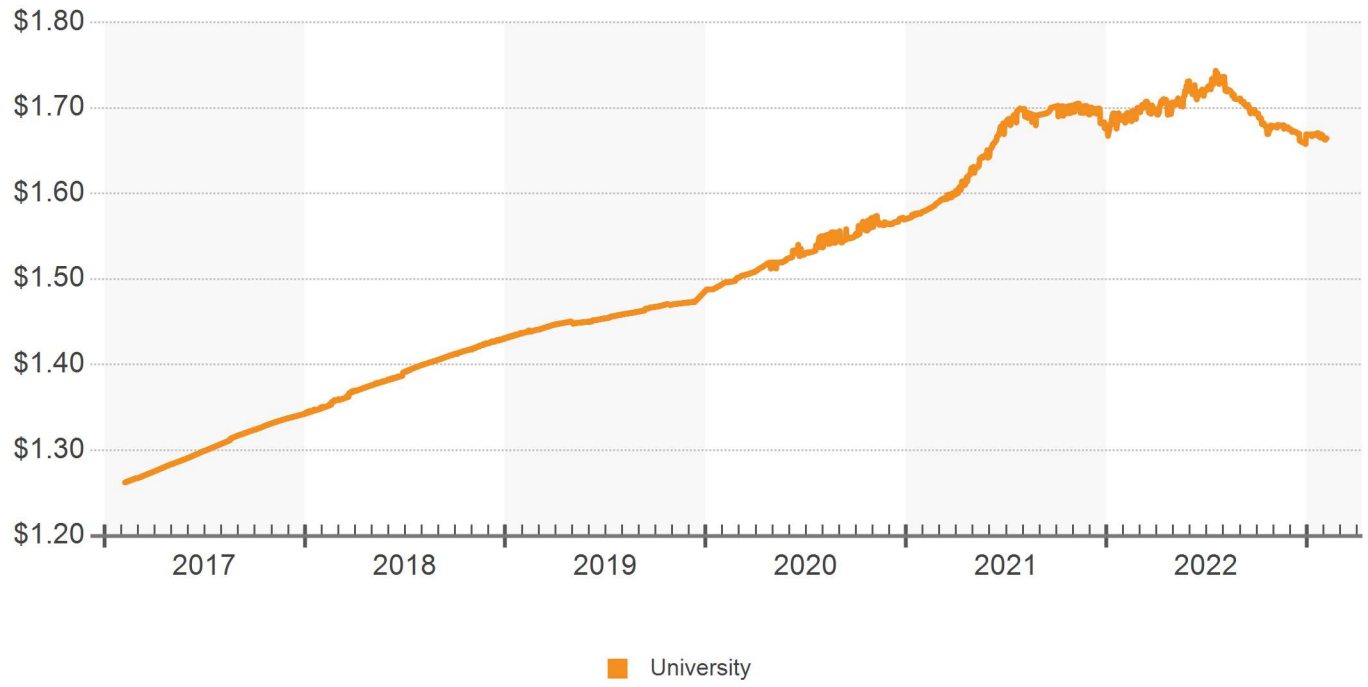

© 2023 CoStar Group - Licensed to Merchants Capital - 1108535

MARKET RENT PER UNIT & RENT GROWTH

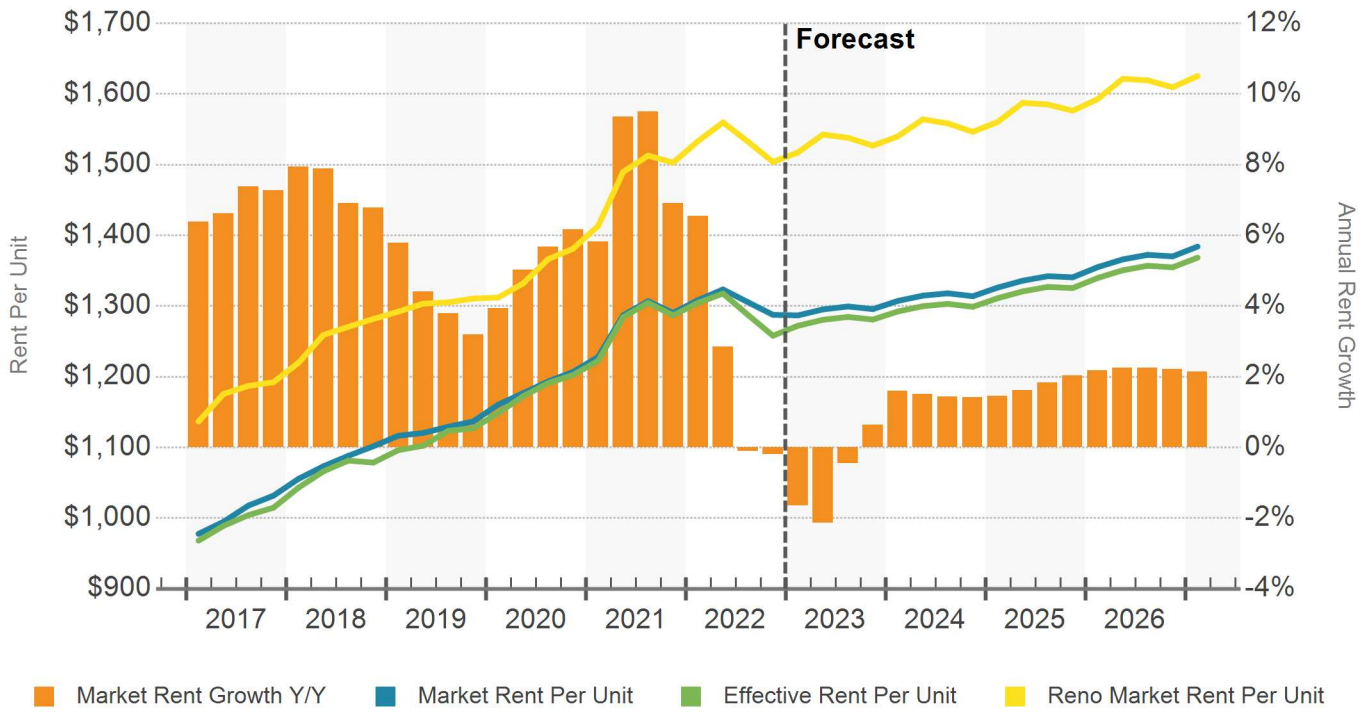

MARKET RENT PER UNIT BY BEDROOM

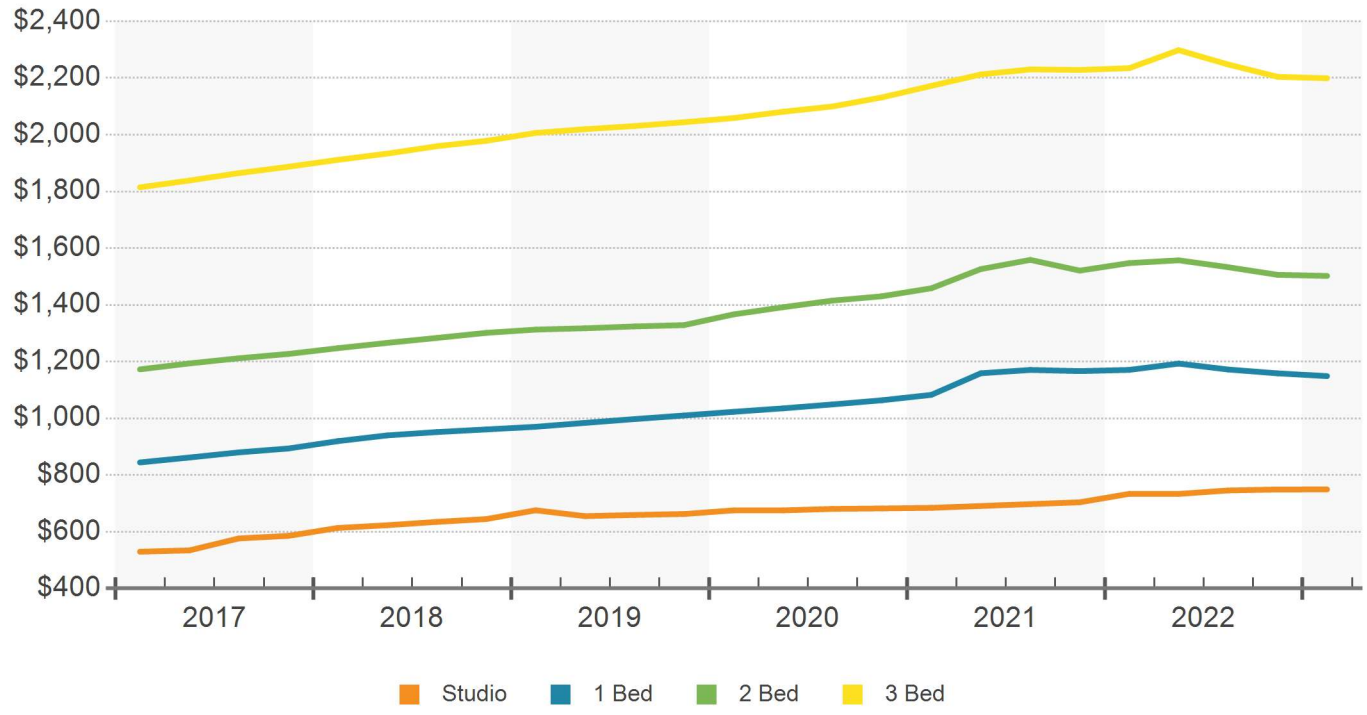

© 2023 CoStar Group - Licensed to Merchants Capital - 1108535

DELIVERIES & DEMOLITIONS

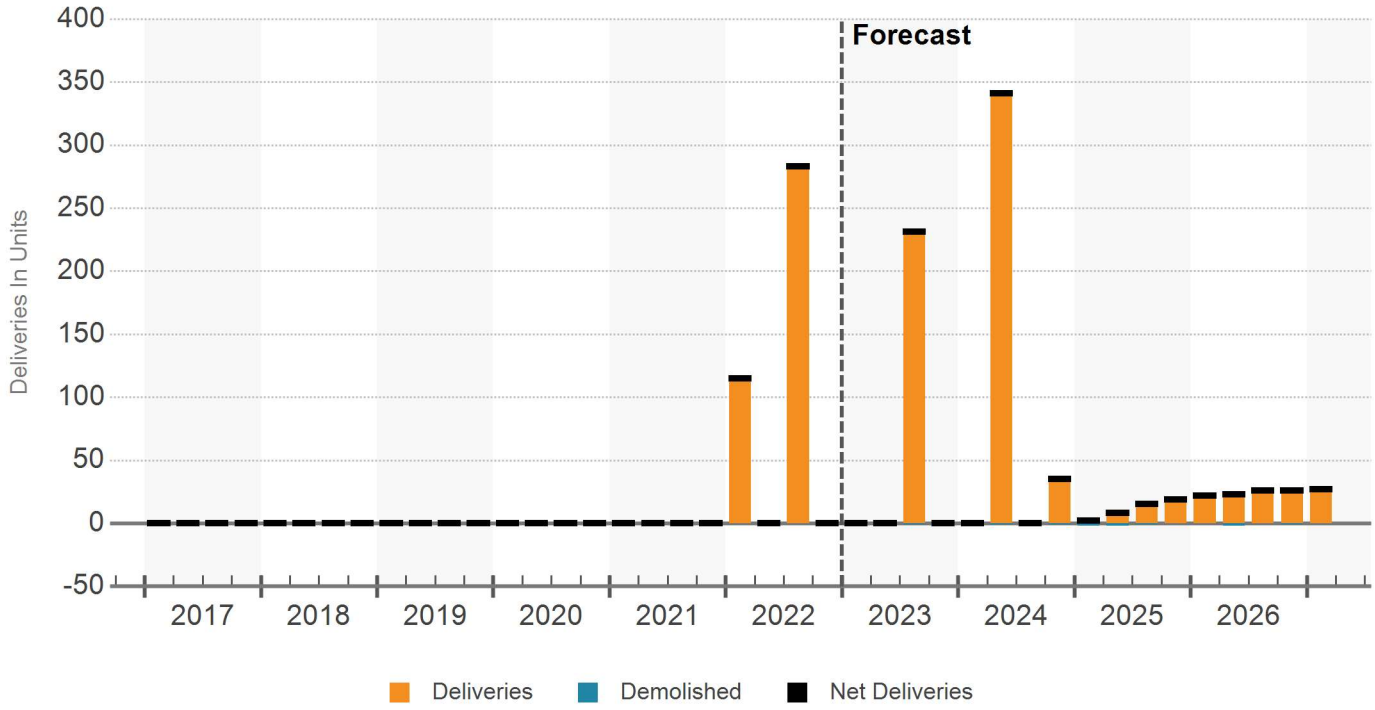

© 2023 CoStar Group - Licensed to Merchants Capital - 1108535

Construction

University Multi-Family

All-Time Annual Avg. Units	Delivered Units Past 8 Qtrs	Delivered Units Next 8 Qtrs	Proposed Units Next 8 Qtrs
44	398	610	437

PAST 8 QUARTERS DELIVERIES, UNDER CONSTRUCTION, & PROPOSED

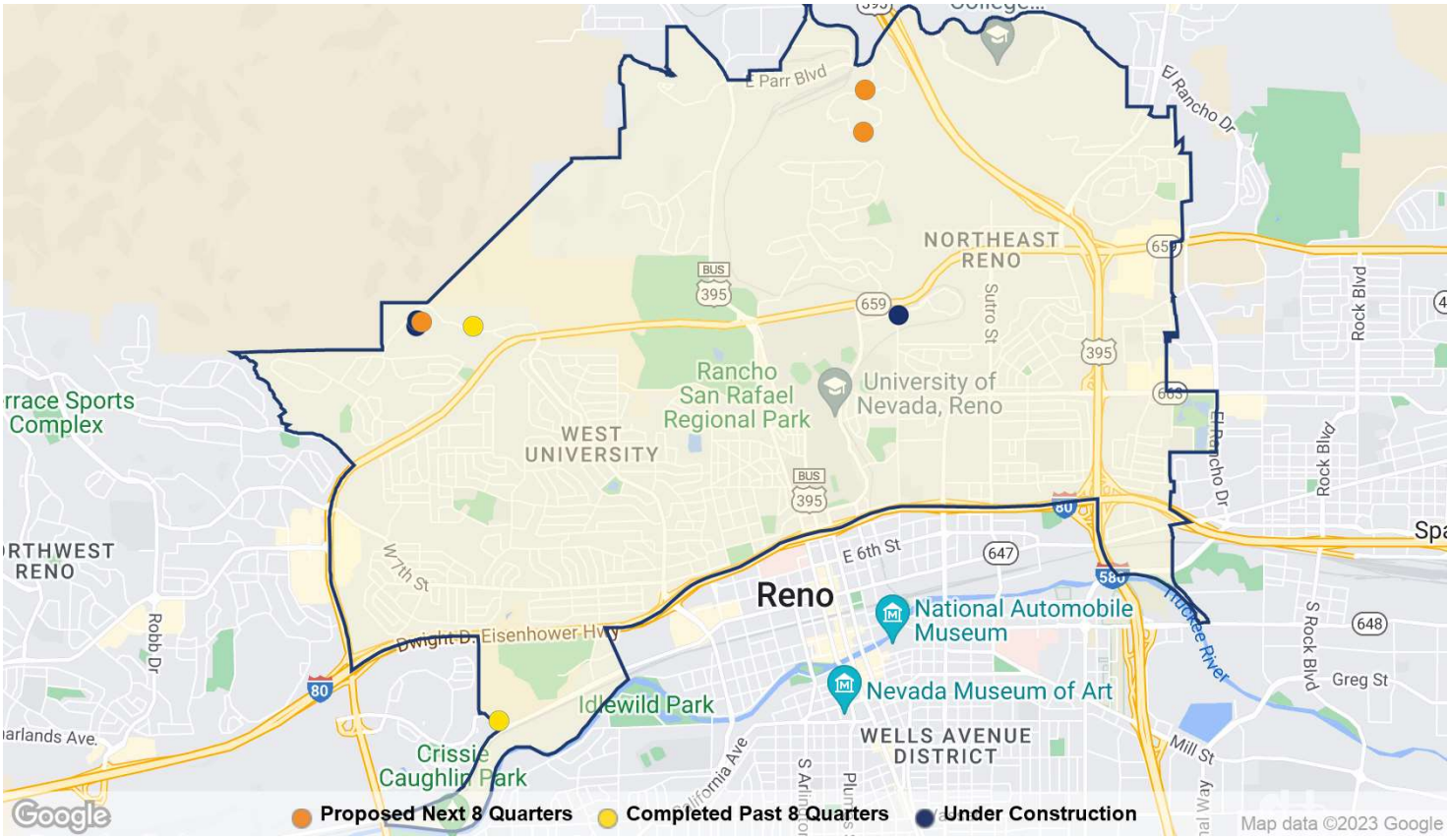

PAST & FUTURE DELIVERIES IN UNITS

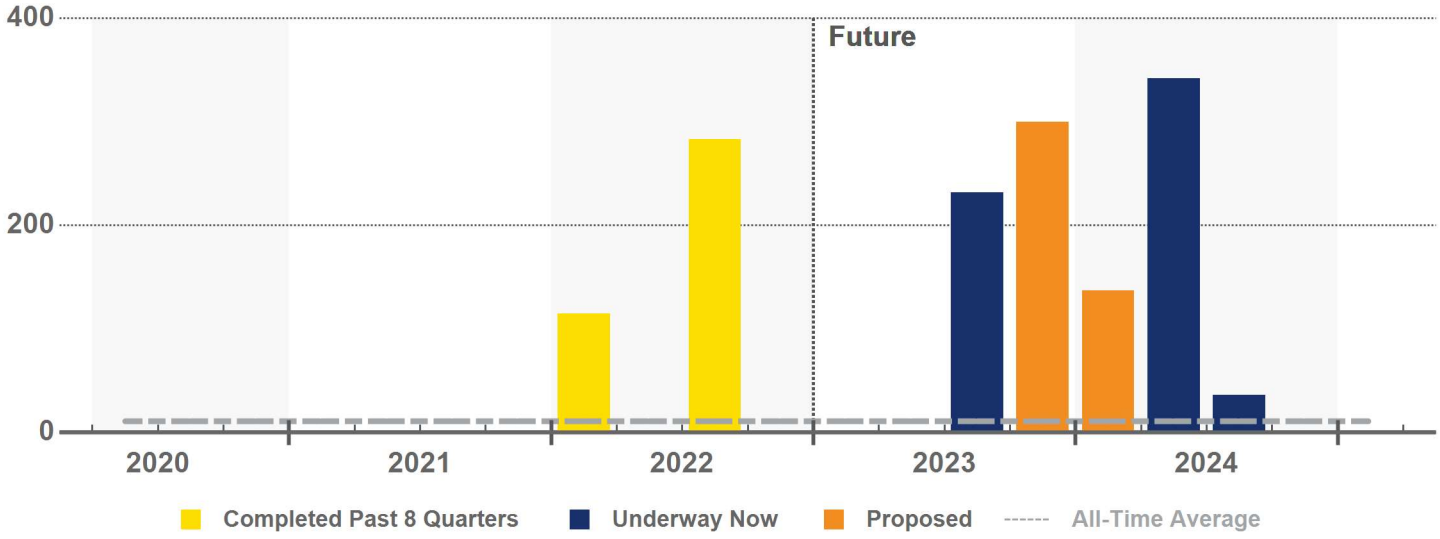

© 2023 CoStar Group - Licensed to Merchants Capital - 1108535

Construction

RECENT DELIVERIES

	Property Name/Address	Rating	Units	Stories	Start	Complete	Developer/Owner
1	The Retreat 1100 Solitude Trl	★★★★☆	283	3	Aug 2020	Jul 2022	Guardian Capital Guardian Capital
2	The Keystone Trailhead… 3029 Leadership Pky	★★★☆☆	115	3	Apr 2021	Mar 2022	- Kromer Investments Inc.

UNDER CONSTRUCTION

	Property Name/Address	Rating	Units	Stories	Start	Complete	Developer/Owner
1	The Overlook at Keyston… 3100 Leadership Pky	★★★☆☆	342	2	May 2022	May 2024	Tanamera Construction, LLC B & L Investments Inc.
2	The Edison 2450 Valley Rd	★★★★☆	232	7	Feb 2022	Aug 2023	Horizon Realty Advisors Horizon Realty Advisors
3	Bldg D 3150 Leadership Pky	★★★☆☆	36	3	Jan 2023	Jul 2024	Tanamera Construction, LLC Overlook at Keystone Canyon Inv…

PROPOSED

	Property Name/Address	Rating	Units	Stories	Start	Complete	Developer/Owner
1	Stone Village Apartments 5000 Gardella Ave	★★★☆☆	300	3	Mar 2023	Dec 2023	Allco Construction Inc Kromer Investments Inc.
2	Bennie Lane Studios 635 Bennie Ln	★★★☆☆	119	-	Jul 2023	Jan 2024	- -
3	Bldg A 3150 Leadership Pky	★★★★☆	18	3	Mar 2023	Mar 2024	- -

© 2023 CoStar Group - Licensed to Merchants Capital - 1108535

Buyers have shown interest in University multifamily properties and have scooped up assets over the years. That trend has continued through the past 12 months, as 7 communities were acquired. Annual sales volume has averaged $31.8 million over the past five years, and the 12-month high in investment volume hit $82.1 million over that stretch. In the past 12 months specifically, $16.5 million worth of assets sold.

The market price, which is derived from the price movement of all communities in the submarket, now sits at $229,252/unit. That figure is up from this time last year, although the price itself still has some catching up to do to reach the overall average for the Reno metro. The market cap rate has dropped since last year and currently sits at 4.4%. This is the lowest cap rate that has been seen in five years, and it's close to the metro's average.

SALES VOLUME & MARKET SALE PRICE PER UNIT

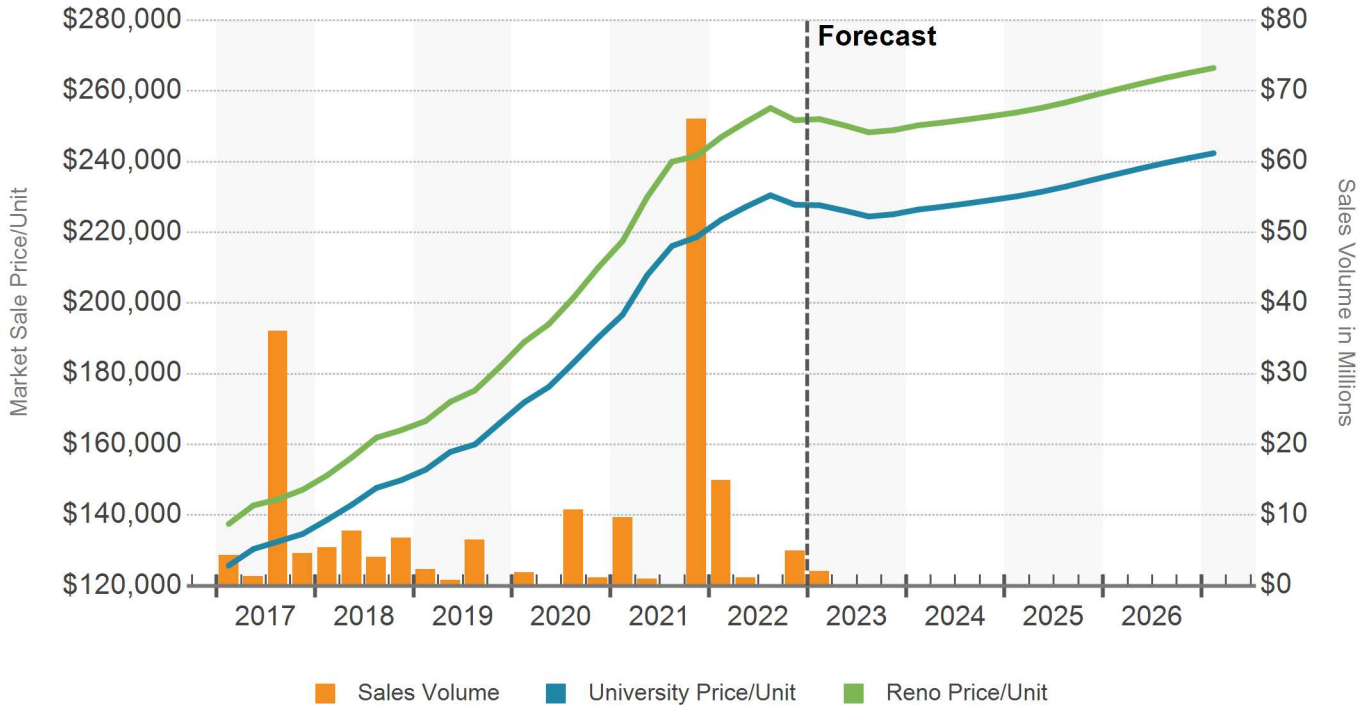

© 2023 CoStar Group - Licensed to Merchants Capital - 1108535

MARKET CAP RATE

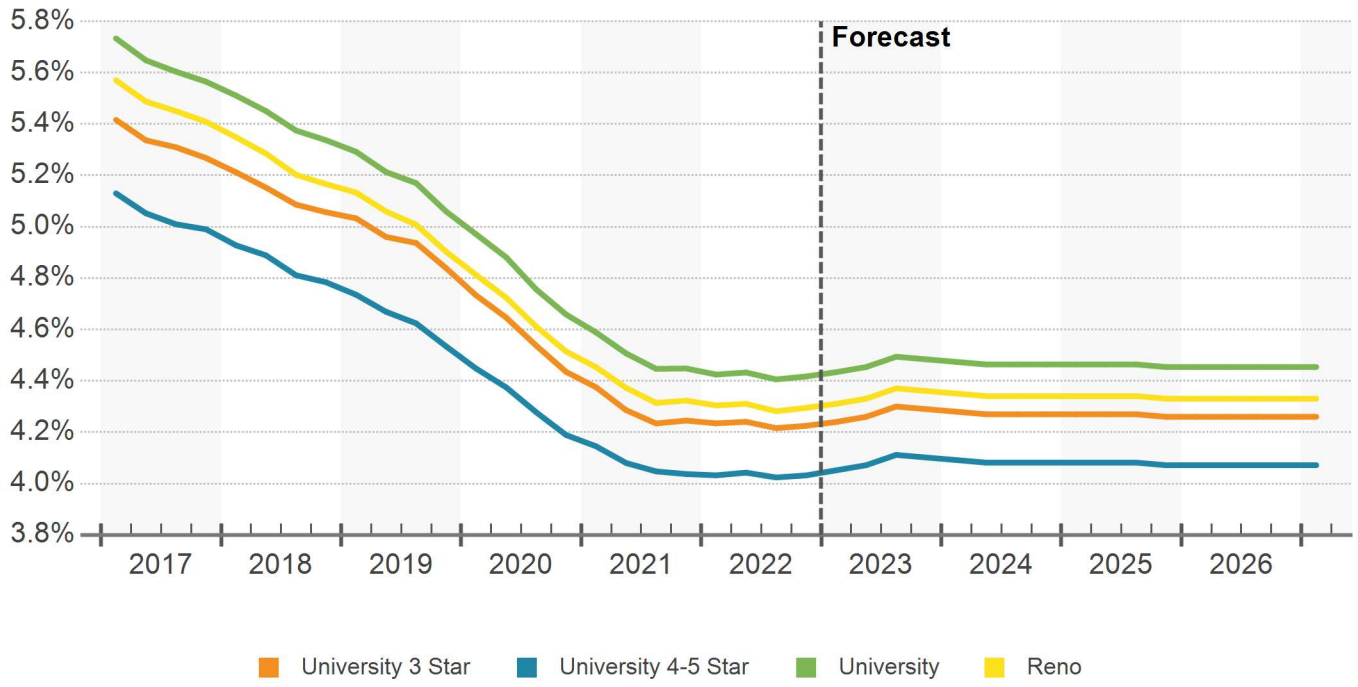

© 2023 CoStar Group - Licensed to Merchants Capital - 1108535

Sales Past 12 Months

University Multi-Family

Sale Comparables	Avg. Price/Unit (thous.)	Average Price (mil.)	Average Vacancy at Sale
6	$176	$4.4	4.4%

SALE COMPARABLE LOCATIONS

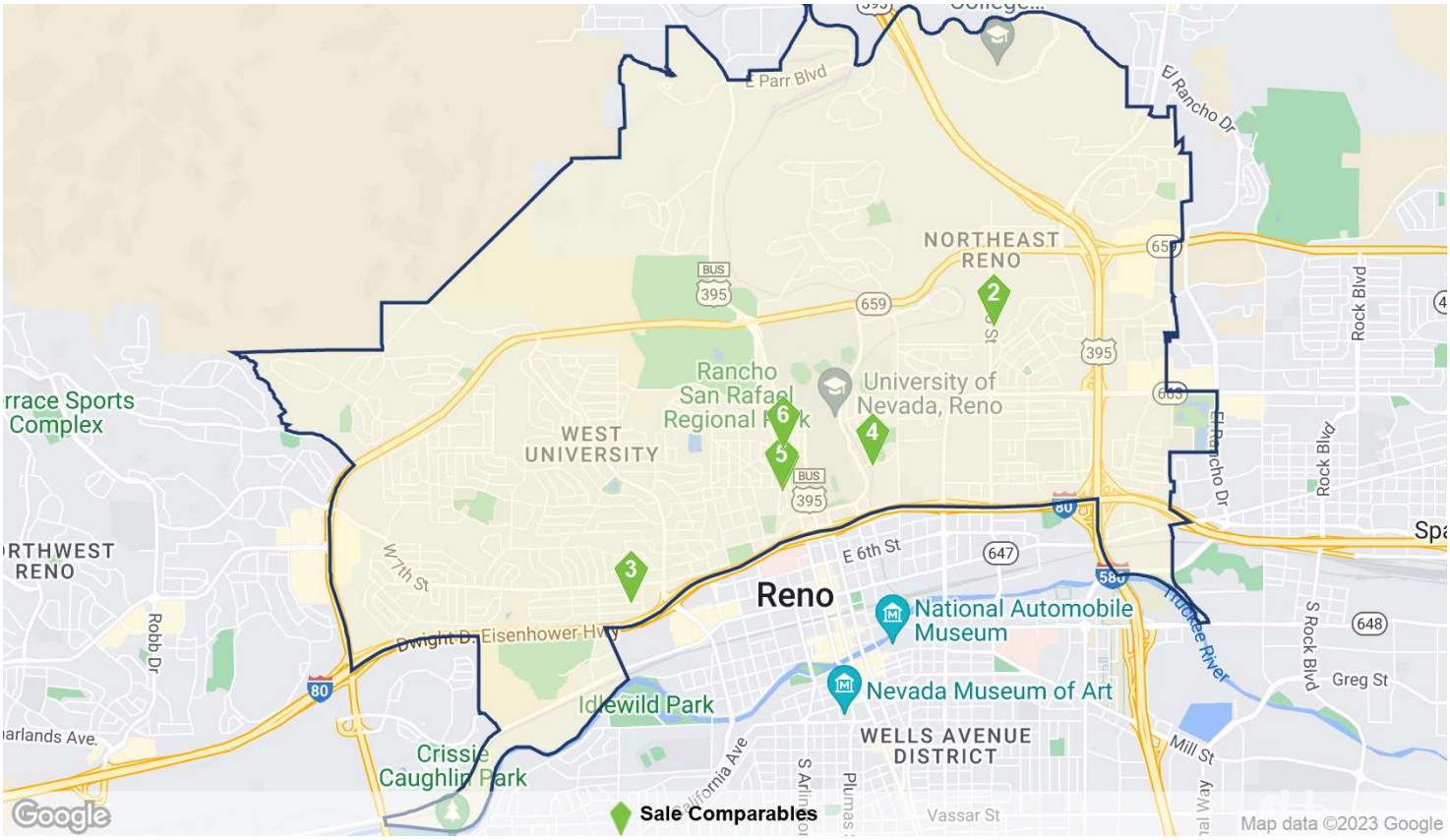

SALE COMPARABLES SUMMARY STATISTICS

Sales Attributes	Low	Average	Median	High
Sale Price	$1,365,080	$4,376,000	$4,180,000	$9,384,920
Price/Unit	$153,906	$176,451	$170,635	$289,285
Cap Rate	-	-	-	-
Vacancy Rate At Sale	0%	4.4%	1.6%	16.7%
Time Since Sale in Months	0.9	6.9	7.6	11.5
Property Attributes	**Low**	**Average**	**Median**	**High**
Property Size in Units	7	22	17	55
Number of Floors	2	2	2	3
Average Unit SF	59	591	575	1,189
Year Built	1942	1965	1965	1987
Star Rating	★★☆☆☆	★★☆☆☆ 2.0	★★☆☆☆	★★☆☆☆

© 2023 CoStar Group - Licensed to Merchants Capital - 1108535

Sales Past 12 Months

RECENT SIGNIFICANT SALES

	Property Name/Address	Property Information				Sale Information			
		Rating	Yr Built	Units	Vacancy	Sale Date	Price	Price/Unit	Price/SF
1	Oak Manor 1055-1075 Oak St	★★☆☆☆	1983	55	5.5%	2/23/2022	$9,384,920	$170,634	$234
2	Creekside Apartments 2400-2450 Sutro St	★★☆☆☆	1987	32	3.1%	12/8/2022	$4,925,000	$153,906	$233
3	Carlin Apartments 1380 Carlin St	★★☆☆☆	1973	22	0%	2/28/2022	$4,180,000	$190,000	$282
4	400 Highland Ave	★★☆☆☆	1942	7	0%	1/12/2023	$2,025,000	$289,285	$243
5	Angel Street Apartments 1092 Angel St	★★☆☆☆	1958	8	0%	2/23/2022	$1,365,080	$170,635	$204
6	1380 N Sierra St	★★☆☆☆	1947	12	16.7%	10/14/2022	-	-	-

© 2023 CoStar Group - Licensed to Merchants Capital - 1108535

OVERALL SUPPLY & DEMAND

	Inventory			Absorption		
Year	Units	Growth	% Growth	Units	% of Inv	Construction Ratio
2027	5,155	107	2.1%	148	2.9%	0.7
2026	5,048	98	2.0%	198	3.9%	0.5
2025	4,950	43	0.9%	235	4.7%	0.2
2024	4,907	376	8.3%	236	4.8%	1.6
2023	4,531	230	5.3%	141	3.1%	1.6
YTD	4,301	0	0%	28	0.7%	0
2022	4,301	398	10.2%	68	1.6%	5.9
2021	3,903	0	0%	(10)	-0.3%	0
2020	3,903	0	0%	30	0.8%	0
2019	3,903	0	0%	(21)	-0.5%	0
2018	3,903	0	0%	(1)	0%	0
2017	3,903	0	0%	14	0.4%	0
2016	3,903	0	0%	15	0.4%	0
2015	3,903	(5)	-0.1%	141	3.6%	0
2014	3,908	288	8.0%	189	4.8%	1.5
2013	3,620	0	0%	76	2.1%	0
2012	3,620	0	0%	31	0.9%	0
2011	3,620	0	0%	42	1.2%	0

4 & 5 STAR SUPPLY & DEMAND

	Inventory			Absorption		
Year	Units	Growth	% Growth	Units	% of Inv	Construction Ratio
2027	1,296	109	9.2%	117	9.0%	0.9
2026	1,187	99	9.1%	107	9.0%	0.9
2025	1,088	45	4.3%	98	9.0%	0.5
2024	1,043	0	0%	127	12.2%	0
2023	1,043	232	28.6%	123	11.8%	1.9
YTD	811	0	0%	20	2.5%	0
2022	811	283	53.6%	56	6.9%	5.1
2021	528	0	0%	(8)	-1.5%	0
2020	528	0	0%	11	2.1%	0
2019	528	0	0%	(4)	-0.8%	0
2018	528	0	0%	2	0.4%	0
2017	528	0	0%	(8)	-1.5%	0
2016	528	0	0%	0	0%	-
2015	528	0	0%	6	1.1%	0
2014	528	0	0%	1	0.2%	0
2013	528	0	0%	13	2.5%	0
2012	528	0	0%	25	4.7%	0
2011	528	0	0%	27	5.1%	0

© 2023 CoStar Group - Licensed to Merchants Capital - 1108535

3 STAR SUPPLY & DEMAND

	Inventory			Absorption		
Year	Units	Growth	% Growth	Units	% of Inv	Construction Ratio
2027	1,592	0	0%	35	2.2%	0
2026	1,592	0	0%	91	5.7%	0
2025	1,592	0	0%	140	8.8%	0
2024	1,592	378	31.1%	111	7.0%	3.4
2023	1,214	0	0%	25	2.1%	0
YTD	1,214	0	0%	4	0.3%	0
2022	1,214	115	10.5%	38	3.1%	3.0
2021	1,099	0	0%	9	0.8%	0
2020	1,099	0	0%	2	0.2%	0
2019	1,099	0	0%	(1)	-0.1%	0
2018	1,099	0	0%	0	0%	-
2017	1,099	0	0%	(7)	-0.6%	0
2016	1,099	0	0%	4	0.4%	0
2015	1,099	0	0%	95	8.6%	0
2014	1,099	288	35.5%	194	17.7%	1.5
2013	811	0	0%	18	2.2%	0
2012	811	0	0%	10	1.2%	0
2011	811	0	0%	13	1.6%	0

1 & 2 STAR SUPPLY & DEMAND

	Inventory			Absorption		
Year	Units	Growth	% Growth	Units	% of Inv	Construction Ratio
2027	2,267	(2)	-0.1%	(4)	-0.2%	0.5
2026	2,269	(1)	0%	0	0%	-
2025	2,270	(2)	-0.1%	(3)	-0.1%	0.7
2024	2,272	(2)	-0.1%	(2)	-0.1%	1.0
2023	2,274	(2)	-0.1%	(7)	-0.3%	0.3
YTD	2,276	0	0%	4	0.2%	0
2022	2,276	0	0%	(26)	-1.1%	0
2021	2,276	0	0%	(11)	-0.5%	0
2020	2,276	0	0%	17	0.7%	0
2019	2,276	0	0%	(16)	-0.7%	0
2018	2,276	0	0%	(3)	-0.1%	0
2017	2,276	0	0%	29	1.3%	0
2016	2,276	0	0%	11	0.5%	0
2015	2,276	(5)	-0.2%	40	1.8%	-
2014	2,281	0	0%	(6)	-0.3%	0
2013	2,281	0	0%	45	2.0%	0
2012	2,281	0	0%	(4)	-0.2%	0
2011	2,281	0	0%	2	0.1%	0

© 2023 CoStar Group - Licensed to Merchants Capital - 1108535

OVERALL VACANCY & RENT

	Vacancy			Market Rent				Effective Rents	
Year	Units	Percent	Ppts Chg	Per Unit	Per SF	% Growth	Ppts Chg	Units	Per SF
2027	327	6.3%	(0.9)	$1,397	$1.81	1.9%	(0.3)	$1,381	$1.79
2026	368	7.3%	(2.2)	$1,370	$1.78	2.2%	0.2	$1,355	$1.76
2025	468	9.4%	(4.0)	$1,341	$1.74	2.0%	0.6	$1,326	$1.72
2024	660	13.4%	2.0	$1,314	$1.71	1.4%	0.8	$1,299	$1.69
2023	519	11.4%	1.5	$1,296	$1.68	0.6%	0.8	$1,281	$1.66
YTD	400	9.3%	(0.6)	$1,282	$1.66	-1.2%	(1.0)	$1,268	$1.65
2022	427	9.9%	7.4	$1,288	$1.67	-0.2%	(7.1)	$1,258	$1.63
2021	99	2.5%	0.2	$1,290	$1.68	6.9%	0.7	$1,287	$1.67
2020	90	2.3%	(0.8)	$1,207	$1.57	6.2%	3.0	$1,203	$1.56
2019	121	3.1%	0.5	$1,137	$1.48	3.2%	(3.6)	$1,127	$1.46
2018	100	2.6%	0	$1,102	$1.43	6.8%	(0.5)	$1,079	$1.40
2017	99	2.5%	(0.4)	$1,032	$1.34	7.3%	0.7	$1,015	$1.32
2016	114	2.9%	(0.4)	$962	$1.25	6.6%	0.3	$953	$1.24
2015	130	3.3%	(3.7)	$903	$1.17	6.2%	2.8	$889	$1.15
2014	276	7.1%	2.2	$850	$1.10	3.4%	0.6	$837	$1.09
2013	177	4.9%	(2.1)	$822	$1.07	2.9%	1.2	$815	$1.06
2012	253	7.0%	(0.8)	$799	$1.04	1.6%	0.5	$788	$1.02
2011	282	7.8%	(1.2)	$786	$1.02	1.2%	-	$780	$1.01

4 & 5 STAR VACANCY & RENT

	Vacancy			Market Rent				Effective Rents	
Year	Units	Percent	Ppts Chg	Per Unit	Per SF	% Growth	Ppts Chg	Units	Per SF
2027	157	12.1%	(1.7)	$1,854	$1.85	1.5%	(0.2)	$1,802	$1.80
2026	164	13.9%	(2.1)	$1,827	$1.82	1.7%	0.1	$1,775	$1.77
2025	174	16.0%	(5.7)	$1,797	$1.79	1.6%	0.6	$1,746	$1.74
2024	225	21.6%	(12.1)	$1,769	$1.77	1.0%	1.1	$1,719	$1.72
2023	352	33.7%	3.9	$1,751	$1.75	-0.1%	5.5	$1,702	$1.70
YTD	223	27.4%	(2.4)	$1,736	$1.73	-6.0%	(0.4)	$1,688	$1.68
2022	242	29.9%	26.7	$1,754	$1.75	-5.7%	(13.1)	$1,689	$1.69
2021	16	3.1%	1.5	$1,859	$1.86	7.4%	3.0	$1,857	$1.85
2020	9	1.7%	(2.1)	$1,731	$1.73	4.4%	3.8	$1,727	$1.72
2019	20	3.7%	0.7	$1,659	$1.66	0.6%	(4.8)	$1,622	$1.62
2018	16	3.0%	(0.2)	$1,649	$1.65	5.4%	(2.0)	$1,623	$1.62
2017	17	3.2%	1.4	$1,564	$1.56	7.4%	1.4	$1,531	$1.53
2016	10	1.8%	(0.1)	$1,455	$1.45	6.0%	0.2	$1,439	$1.44
2015	10	1.9%	(1.1)	$1,373	$1.37	5.9%	2.3	$1,327	$1.32
2014	16	3.0%	(0.1)	$1,297	$1.29	3.5%	0.1	$1,277	$1.27
2013	16	3.1%	(2.6)	$1,253	$1.25	3.4%	0.6	$1,233	$1.23
2012	30	5.6%	(4.5)	$1,212	$1.21	2.8%	0.8	$1,199	$1.20
2011	53	10.1%	(5.0)	$1,179	$1.18	2.0%	-	$1,170	$1.17

© 2023 CoStar Group - Licensed to Merchants Capital - 1108535

3 STAR VACANCY & RENT

	Vacancy			Market Rent				Effective Rents	
Year	Units	Percent	Ppts Chg	Per Unit	Per SF	% Growth	Ppts Chg	Units	Per SF
2027	77	4.8%	(2.2)	$1,603	$1.66	2.0%	(0.3)	$1,594	$1.66
2026	112	7.0%	(5.7)	$1,571	$1.63	2.3%	0.3	$1,562	$1.62
2025	202	12.7%	(8.8)	$1,536	$1.60	2.0%	0.7	$1,527	$1.59
2024	342	21.5%	15.3	$1,506	$1.56	1.3%	0	$1,498	$1.56
2023	75	6.2%	(2.0)	$1,487	$1.55	1.3%	(1.3)	$1,479	$1.54
YTD	95	7.8%	(0.3)	$1,471	$1.53	1.1%	(1.4)	$1,463	$1.52
2022	99	8.2%	6.1	$1,469	$1.53	2.5%	(2.5)	$1,423	$1.48
2021	22	2.0%	(0.8)	$1,432	$1.49	5.0%	(5.3)	$1,429	$1.49
2020	31	2.9%	(0.2)	$1,364	$1.42	10.4%	6.7	$1,356	$1.41
2019	34	3.1%	0.1	$1,236	$1.28	3.7%	(2.1)	$1,234	$1.28
2018	32	3.0%	(0.1)	$1,192	$1.24	5.7%	(0.1)	$1,135	$1.18
2017	33	3.0%	0.6	$1,128	$1.17	5.8%	(1.5)	$1,097	$1.14
2016	26	2.4%	(0.4)	$1,066	$1.10	7.3%	2.3	$1,052	$1.09
2015	31	2.8%	(8.6)	$993	$1.03	5.0%	1.2	$985	$1.02
2014	125	11.4%	7.5	$946	$0.98	3.8%	1.3	$925	$0.96
2013	32	3.9%	(2.2)	$912	$0.94	2.4%	0.6	$909	$0.94
2012	50	6.1%	(1.1)	$890	$0.92	1.8%	1.2	$870	$0.90
2011	59	7.3%	(1.6)	$874	$0.91	0.6%	-	$868	$0.90

1 & 2 STAR VACANCY & RENT

	Vacancy			Market Rent				Effective Rents	
Year	Units	Percent	Ppts Chg	Per Unit	Per SF	% Growth	Ppts Chg	Units	Per SF
2027	93	4.1%	0.1	$1,083	$1.93	2.2%	(0.3)	$1,079	$1.92
2026	92	4.0%	0	$1,059	$1.89	2.6%	0.1	$1,056	$1.88
2025	92	4.0%	0	$1,033	$1.84	2.4%	0.6	$1,029	$1.84
2024	92	4.0%	0	$1,009	$1.80	1.8%	1.1	$1,005	$1.79
2023	92	4.1%	0.3	$990	$1.77	0.7%	(1.3)	$987	$1.76
YTD	82	3.6%	(0.2)	$979	$1.74	0.7%	(1.3)	$976	$1.74
2022	86	3.8%	1.1	$983	$1.75	2.0%	(6.1)	$979	$1.74
2021	60	2.6%	0.4	$964	$1.72	8.1%	3.9	$960	$1.71
2020	50	2.2%	(0.8)	$892	$1.59	4.2%	(0.9)	$889	$1.58
2019	67	3.0%	0.7	$856	$1.52	5.1%	(3.8)	$853	$1.52
2018	51	2.3%	0.1	$814	$1.45	8.9%	0.6	$812	$1.44
2017	49	2.2%	(1.3)	$748	$1.33	8.3%	1.9	$745	$1.32
2016	78	3.4%	(0.5)	$690	$1.23	6.5%	(1.2)	$687	$1.22
2015	90	3.9%	(2.0)	$648	$1.15	7.7%	4.6	$645	$1.15
2014	135	5.9%	0.3	$602	$1.07	3.0%	0.3	$598	$1.06
2013	129	5.6%	(2.0)	$584	$1.04	2.7%	2.3	$581	$1.03
2012	174	7.6%	0.1	$569	$1.01	0.4%	(0.6)	$564	$1
2011	170	7.5%	(0.1)	$566	$1	1.1%	-	$562	$1

© 2023 CoStar Group - Licensed to Merchants Capital - 1108535

OVERALL SALES

	Completed Transactions (1)						Market Pricing Trends (2)		
Year	Deals	Volume	Turnover	Avg Price	Avg Price/Unit	Avg Cap Rate	Price/Unit	Price Index	Cap Rate
2027	-	-	-	-	-	-	$246,098	376	4.5%
2026	-	-	-	-	-	-	$241,036	368	4.5%
2025	-	-	-	-	-	-	$234,699	358	4.5%
2024	-	-	-	-	-	-	$229,176	350	4.5%
2023	-	-	-	-	-	-	$225,135	344	4.5%
YTD	1	$2M	0.2%	$2,025,000	$289,286	-	$229,248	350	4.4%
2022	8	$21M	3.4%	$3,497,967	$165,258	-	$227,827	348	4.4%
2021	9	$76.6M	7.6%	$9,578,098	$266,058	5.2%	$218,666	334	4.4%
2020	7	$13.8M	2.5%	$1,966,857	$140,490	5.9%	$190,185	290	4.7%
2019	8	$9.7M	2.2%	$1,380,714	$130,608	6.7%	$166,027	253	5.1%
2018	13	$24M	5.6%	$2,182,182	$126,337	6.2%	$149,886	229	5.3%
2017	14	$46.4M	12.7%	$3,864,312	$121,392	5.9%	$134,689	206	5.6%
2016	6	$9.5M	4.1%	$1,591,352	$59,305	6.2%	$122,128	186	5.8%
2015	8	$9.7M	4.7%	$1,382,057	$55,921	7.6%	$109,084	166	6.1%
2014	9	$19.2M	8.6%	$2,402,750	$58,426	7.4%	$98,596	150	6.3%
2013	5	$2.2M	1.5%	$556,000	$50,545	8.4%	$89,838	137	6.6%
2012	2	$35.2M	8.7%	$17,592,750	$112,056	6.0%	$87,866	134	6.6%

(1) Completed transaction data is based on actual arms-length sales transactions and levels are dependent on the mix of what happened to sell in the period.
(2) Market price trends data is based on the estimated price movement of all properties in the market, informed by actual transactions that have occurred.

4 & 5 STAR SALES

	Completed Transactions (1)						Market Pricing Trends (2)		
Year	Deals	Volume	Turnover	Avg Price	Avg Price/Unit	Avg Cap Rate	Price/Unit	Price Index	Cap Rate
2027	-	-	-	-	-	-	$385,026	378	4.1%
2026	-	-	-	-	-	-	$377,708	371	4.1%
2025	-	-	-	-	-	-	$368,437	362	4.1%
2024	-	-	-	-	-	-	$360,219	354	4.1%
2023	-	-	-	-	-	-	$354,156	348	4.1%
YTD	-	-	-	-	-	-	$361,117	355	4.0%
2022	-	-	-	-	-	-	$359,041	353	4.0%
2021	1	$66M	41.7%	$66,000,000	$300,000	4.1%	$346,531	340	4.0%
2020	-	-	-	-	-	-	$304,913	299	4.2%
2019	-	-	-	-	-	-	$268,145	263	4.5%
2018	-	-	-	-	-	-	$240,776	236	4.8%
2017	1	$34.2M	41.7%	$34,246,200	$155,665	5.6%	$217,208	213	5.0%
2016	-	-	-	-	-	-	$197,055	193	5.2%
2015	-	-	-	-	-	-	$173,169	170	5.5%
2014	-	-	-	-	-	-	$156,472	154	5.7%
2013	-	-	-	-	-	-	$141,850	139	6.0%
2012	1	$35M	58.3%	$35,000,000	$113,636	6.0%	$137,817	135	6.0%

(1) Completed transaction data is based on actual arms-length sales transactions and levels are dependent on the mix of what happened to sell in the period.
(2) Market price trends data is based on the estimated price movement of all properties in the market, informed by actual transactions that have occurred.

© 2023 CoStar Group - Licensed to Merchants Capital - 1108535

3 STAR SALES

	Completed Transactions (1)						Market Pricing Trends (2)		
Year	Deals	Volume	Turnover	Avg Price	Avg Price/Unit	Avg Cap Rate	Price/Unit	Price Index	Cap Rate
2027	-	-	-	-	-	-	$289,900	356	4.3%
2026	-	-	-	-	-	-	$283,883	348	4.3%
2025	-	-	-	-	-	-	$276,385	339	4.3%
2024	-	-	-	-	-	-	$269,976	331	4.3%
2023	-	-	-	-	-	-	$265,428	326	4.3%
YTD	-	-	-	-	-	-	$270,178	331	4.2%
2022	-	-	-	-	-	-	$268,497	329	4.2%
2021	3	$3.3M	2.4%	$1,643,008	$172,948	-	$258,379	317	4.2%
2020	1	$725K	0.5%	$725,000	$120,833	-	$225,374	276	4.4%
2019	2	$3.6M	2.4%	$1,795,000	$138,077	5.0%	$194,154	238	4.8%
2018	2	$2.6M	2.9%	$1,300,000	$81,250	6.0%	$178,508	219	5.1%
2017	6	$5.8M	15.7%	$1,157,109	$79,254	5.4%	$161,803	198	5.3%
2016	1	$545K	0.7%	$545,000	$68,125	6.0%	$147,502	181	5.5%
2015	-	-	-	-	-	-	$134,430	165	5.7%
2014	1	$9M	11.4%	$9,000,000	$72,000	5.8%	$121,335	149	5.9%
2013	3	$424K	3.0%	$212,000	$30,286	8.0%	$110,314	135	6.2%
2012	-	-	-	-	-	-	$108,440	133	6.2%

(1) Completed transaction data is based on actual arms-length sales transactions and levels are dependent on the mix of what happened to sell in the period.
(2) Market price trends data is based on the estimated price movement of all properties in the market, informed by actual transactions that have occurred.

1 & 2 STAR SALES

	Completed Transactions (1)						Market Pricing Trends (2)		
Year	Deals	Volume	Turnover	Avg Price	Avg Price/Unit	Avg Cap Rate	Price/Unit	Price Index	Cap Rate
2027	-	-	-	-	-	-	$151,794	402	4.8%
2026	-	-	-	-	-	-	$148,435	394	4.8%
2025	-	-	-	-	-	-	$144,254	382	4.8%
2024	-	-	-	-	-	-	$140,586	373	4.8%
2023	-	-	-	-	-	-	$137,827	365	4.8%
YTD	1	$2M	0.3%	$2,025,000	$289,286	-	$140,189	372	4.7%
2022	8	$21M	6.5%	$3,497,967	$165,258	-	$139,250	369	4.7%
2021	5	$7.3M	2.2%	$1,467,753	$149,771	5.8%	$132,293	351	4.8%
2020	6	$13M	4.0%	$2,173,833	$141,772	5.9%	$112,995	300	5.0%
2019	6	$6.1M	2.6%	$1,215,000	$126,563	7.2%	$99,555	264	5.5%
2018	11	$21.4M	8.2%	$2,378,222	$135,468	6.2%	$88,216	234	5.8%
2017	7	$6.3M	4.4%	$1,056,667	$71,236	6.3%	$77,907	207	6.0%
2016	5	$9M	6.7%	$1,800,622	$58,844	6.3%	$70,044	186	6.3%
2015	8	$9.7M	8.1%	$1,382,057	$55,921	7.6%	$61,986	164	6.6%
2014	8	$10.2M	9.2%	$1,460,286	$50,108	7.7%	$56,169	149	6.9%
2013	2	$1.8M	1.3%	$900,000	$60,000	9.3%	$51,680	137	7.2%
2012	1	$185.5K	0.3%	$185,500	$30,917	-	$50,585	134	7.2%

(1) Completed transaction data is based on actual arms-length sales transactions and levels are dependent on the mix of what happened to sell in the period.
(2) Market price trends data is based on the estimated price movement of all properties in the market, informed by actual transactions that have occurred.

© 2023 CoStar Group - Licensed to Merchants Capital - 1108535

DELIVERIES & UNDER CONSTRUCTION

	Inventory			Deliveries		Net Deliveries		Under Construction	
Year	Bldgs	Units	Vacancy	Bldgs	Units	Bldgs	Units	Bldgs	Units
2027	-	5,157	6.3%	-	108	-	108	-	-
2026	-	5,049	7.3%	-	100	-	97	-	-
2025	-	4,952	9.4%	-	45	-	44	-	-
2024	-	4,908	13.4%	-	378	-	376	-	-
2023	-	4,532	11.4%	-	232	-	231	-	-
YTD	113	4,301	9.3%	0	0	0	0	3	610
2022	113	4,301	9.9%	2	398	2	398	2	574
2021	111	3,903	2.5%	0	0	0	0	2	398
2020	111	3,903	2.3%	0	0	0	0	1	283
2019	111	3,903	3.1%	0	0	0	0	0	0
2018	111	3,903	2.6%	0	0	0	0	0	0
2017	111	3,903	2.5%	0	0	0	0	0	0
2016	111	3,903	2.9%	0	0	0	0	0	0
2015	111	3,903	3.3%	0	0	(1)	(5)	0	0
2014	112	3,908	7.1%	1	288	1	288	0	0
2013	111	3,620	4.9%	0	0	0	0	1	288
2012	111	3,620	7.0%	0	0	0	0	0	0
2011	111	3,620	7.8%	0	0	0	0	0	0

© 2023 CoStar Group - Licensed to Merchants Capital - 1108535



Multi-Family Market Report

Reno - NV

PREPARED BY

MERCHANTS CAPITAL

Blake Barile
MCC Credit Analyst

CoStar™

Overview

Reno Multi-Family

12 Mo. Delivered Units	12 Mo. Absorption Units	Vacancy Rate	12 Mo. Asking Rent Growth
1,591	295	8.6%	-0.5%

Located on the eastern side of the Sierra Nevada Mountains, and close to the California border Reno, historically, has been a boom and bust market. Recently, local economic development groups have worked diligently to reshape the local economy through diversification. A number of hi-tech manufacturers like Tesla and Nanotech Energy have opened production facilities east of the city over the past couple years. Additionally, Reno has been a major benefactor from the domestic migration that occurred as a result of the pandemic. The market continues to draw new residents to the region as many people leave California for the comparatively low cost of living and high quality of life that Reno offers. The result is unprecedented market growth in the region.

The vacancy rate of 8.6% has been increasing over the past 12 months, up by 2.8% as 1,600 units have delivered during that time. At the same time, net absorption, has slowed, totaling 290 units over that time period. Interestingly, high-end inventory as greatly outperformed the rest of the market as 4 & 5 Star properties accounted for 170 units of absorption.

Construction levels remain high. Currently, 4,500 more units are being built, which will increase Reno's inventory by 10.6%. Slowing demand combined with high development levels creates a risk for oversupply in the near to medium-term. However, the pace of groundbreaking has slowed drastically with no new projects breaking ground in the second half of 2022 and the same is expected into 2023..

Rent growth has slowed dramatically over the past 18 months, down to -0.5% from the high of 12.0% set in the 21Q2. The average monthly rate sits at $1,510, which is still a discount over the national average of $1,630/month.

Sales volume set a new record in 2021, reaching nearly $610 million,and should exceed that figure in 2022. However, nearly all of that activity came in the first and third quarters when sales volume topped $400 million and $250 million, respectively.

Reno has been in a growth cycle for much of the past decade. The region has benefitted from both incoming population and employers over the last few years, making it one of the fastest-growing markets in the western United States, however like many of the western markets that saw a boom during the pandemic demand is starting to slow and questions surrounding demand rising to meet the high levels of new supply coming to the market.

KEY INDICATORS

Current Quarter	Units	Vacancy Rate	Asking Rent	Effective Rent	Absorption Units	Delivered Units	Under Constr Units
4 & 5 Star	14,156	10.5%	$1,780	$1,759	1	0	3,001
3 Star	16,371	9.6%	$1,489	$1,478	19	14	1,496
1 & 2 Star	12,038	5.1%	$1,126	$1,119	(8)	0	0
Market	42,565	8.6%	$1,508	$1,494	12	14	4,497

Annual Trends	12 Month	Historical Average	Forecast Average	Peak	When	Trough	When
Vacancy Change (YOY)	2.8%	6.0%	10.5%	9.4%	2009 Q4	2.9%	2017 Q2
Absorption Units	295	555	1,287	2,418	2021 Q1	(352)	2009 Q2
Delivered Units	1,591	668	1,559	2,285	2020 Q3	0	2016 Q2
Demolished Units	0	38	12	584	2018 Q3	0	2022 Q4
Asking Rent Growth (YOY)	-0.5%	3.1%	1.4%	11.8%	2021 Q2	-6.4%	2009 Q4
Effective Rent Growth (YOY)	-1.0%	3.1%	1.4%	11.9%	2021 Q2	-6.5%	2009 Q4
Sales Volume	$795M	$169.8M	N/A	$913.5M	2022 Q3	$0	2006 Q4

© 2023 CoStar Group - Licensed to Merchants Capital - 1108535

Vacancy

The national flight from high-rent areas was a major driver of growth in the Reno market over the past few years but has slowed significantly in recent months. Net absorption has slowed in 2022 with 290 units over the past 12 months but has surpassed 1,000 units annually since 2019. The vacancy rate rests at 8.6% but has ticked upward in recent periods with deliveries totaling 1,600 units over the past year. Demand will likely struggle to offset supply-driven pressure in coming periods as will with an additional 4,500 are under construction, a 10.6% increase in market inventory.

Over much of the past decade, the metro's population increased at nearly double the national rate. In-migration accounts for more than half of market demand, with California residents alone contributing one-third. Current forecasts indicate that this will likely continue as companies allow their employees to work from home indefinitely; workers can retain their higher-paying jobs while living in an area with cheaper rents.

Besides in-migration, demand was also bolstered in recent years by employment growth that was among the strongest in the U.S. and an increasingly diversified local workforce. The most notable jobs news of the past decade may have been the addition of Tesla. In 2019, the company completed the second phase of its 5.8 million-SF Gigafactory battery manufacturing facility, which could ultimately employ up to 10,000 workers. Moreover, Apple and Google, two of the so-called "Big Four" tech firms, gained a metro presence. Apple occupies a 1.1 million-SF data center, while in 2019, the iPhone maker opened a shipping and receiving outpost in downtown Reno. More recently, Google took delivery of a 100,000-SF data center in 20Q3. After a spike in unemployment at the start of the pandemic, that, too, is faring better, having fallen to 2.5%, which is on par with mid-2017 levels as Reno's economy begins a new growth cycle.

The question facing the market is how long the slowdown in demand will last. Should Reno fail to meet the increase in inventory coming over the next 12 months, there is considerable risk of oversupply. With that said, affordability remains top of mind for many west coast renters and Reno's position as a mid-sized city with an affordable cost of living and a lack of state income tax makes it an attractive option for professionals looking to change their living situation. Additionally, rising interest rates will likely slow the rate of home purchases which could benefit the multifamily market and slowing new household formation further hamper metrics. Concessions may increase and rents could come down as landlords pivot from driving revenue to maintaining occupancy rates.

ABSORPTION, NET DELIVERIES & VACANCY

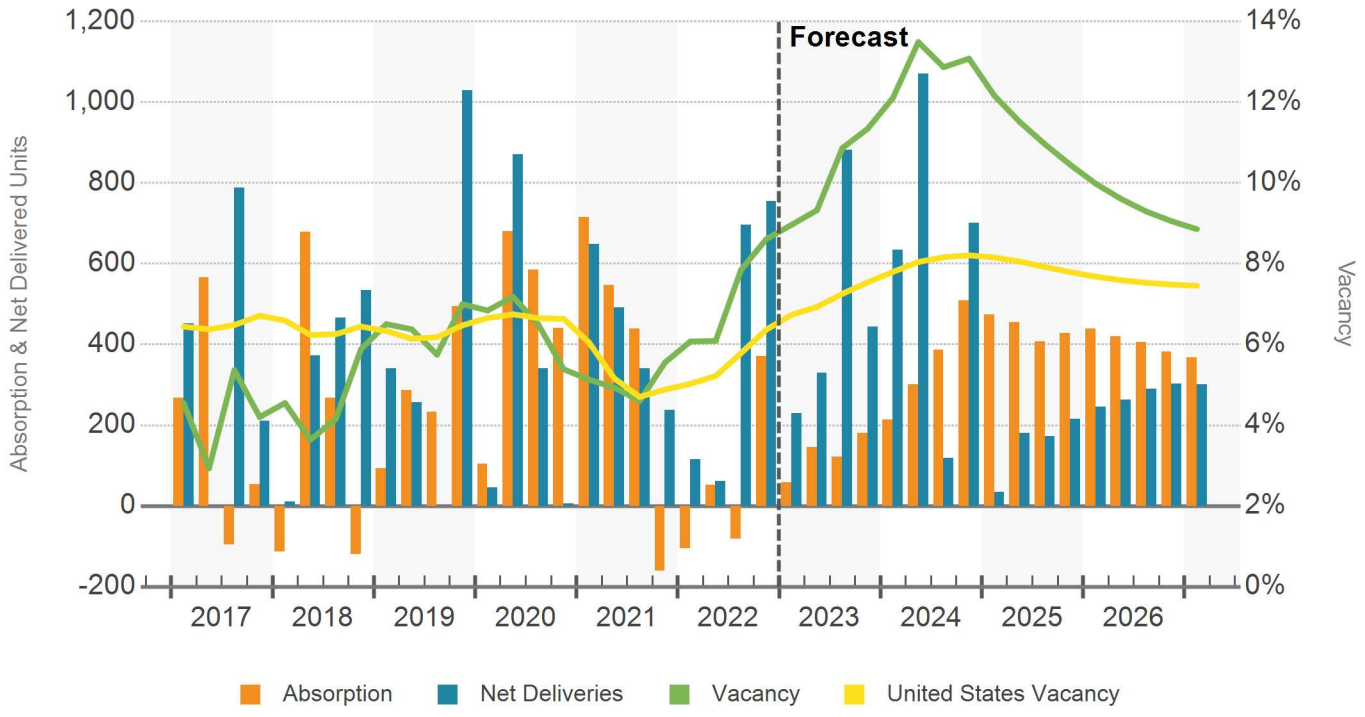

© 2023 CoStar Group - Licensed to Merchants Capital - 1108535

Vacancy

OVERALL & STABILIZED VACANCY

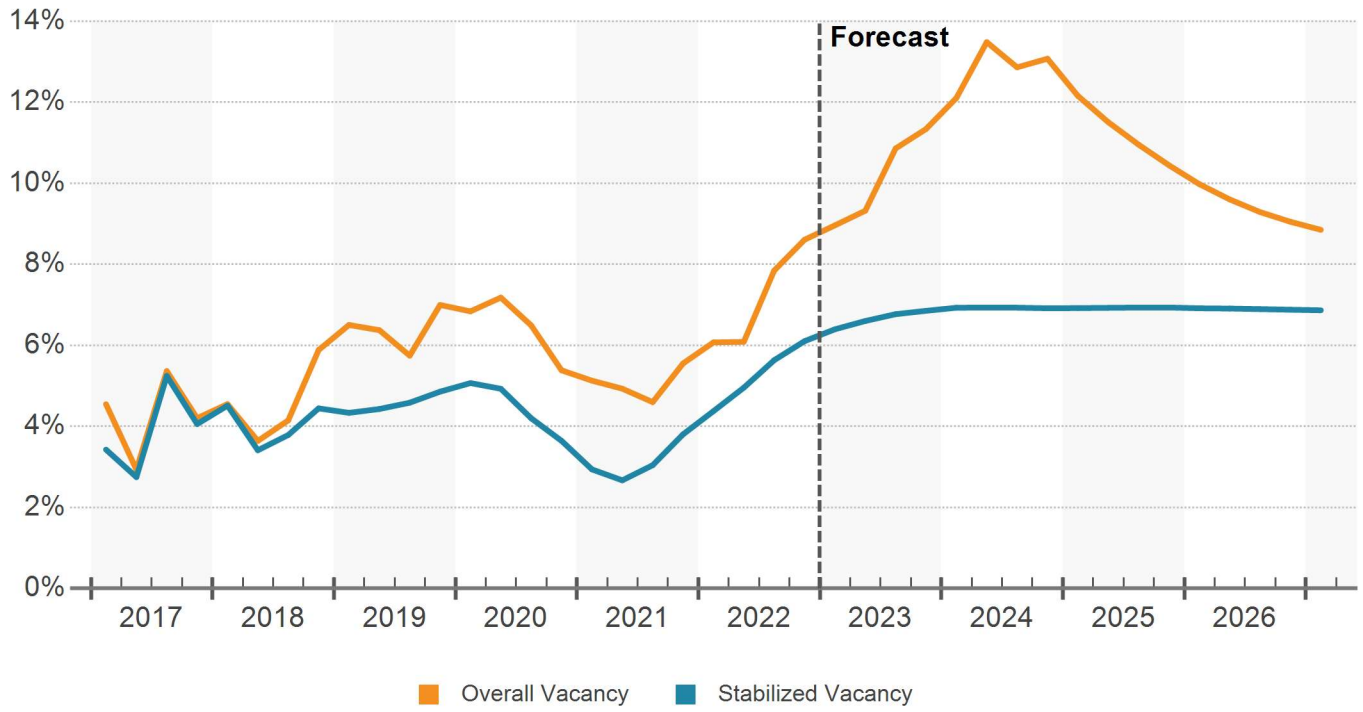

VACANCY RATE

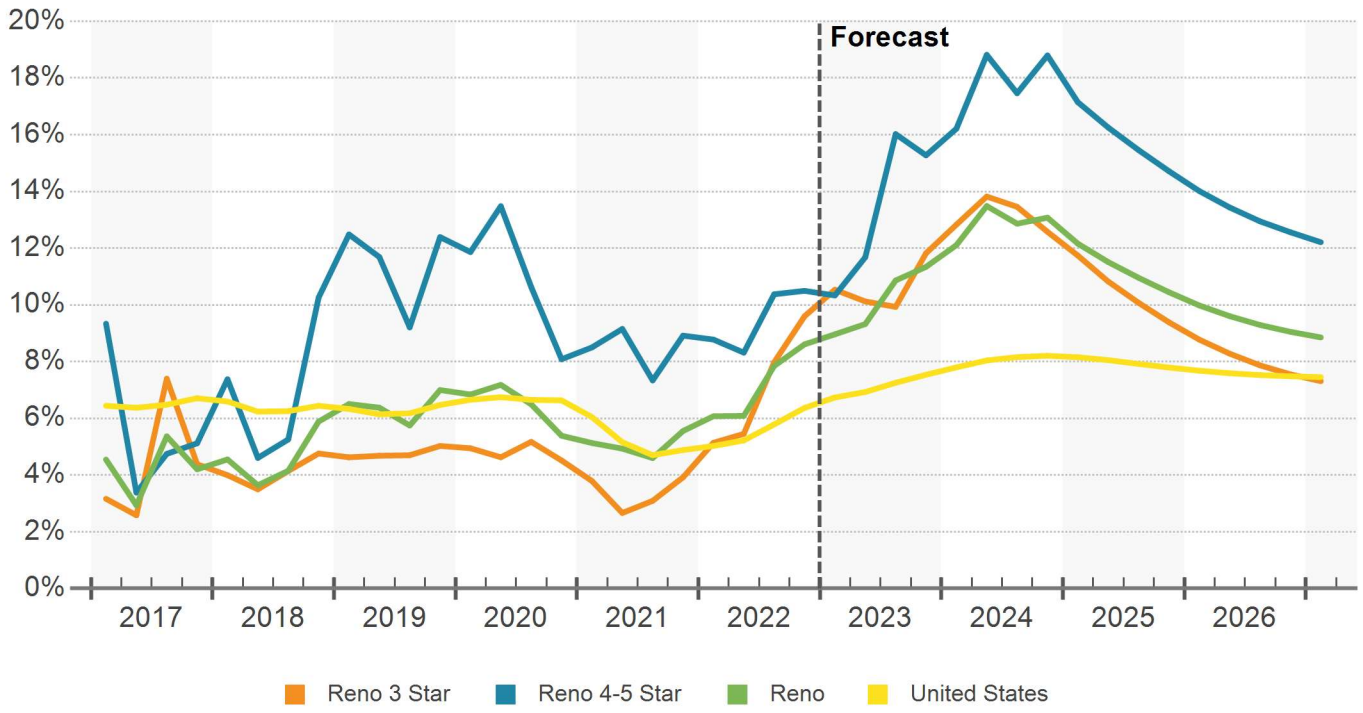

© 2023 CoStar Group - Licensed to Merchants Capital - 1108535

VACANCY BY BEDROOM

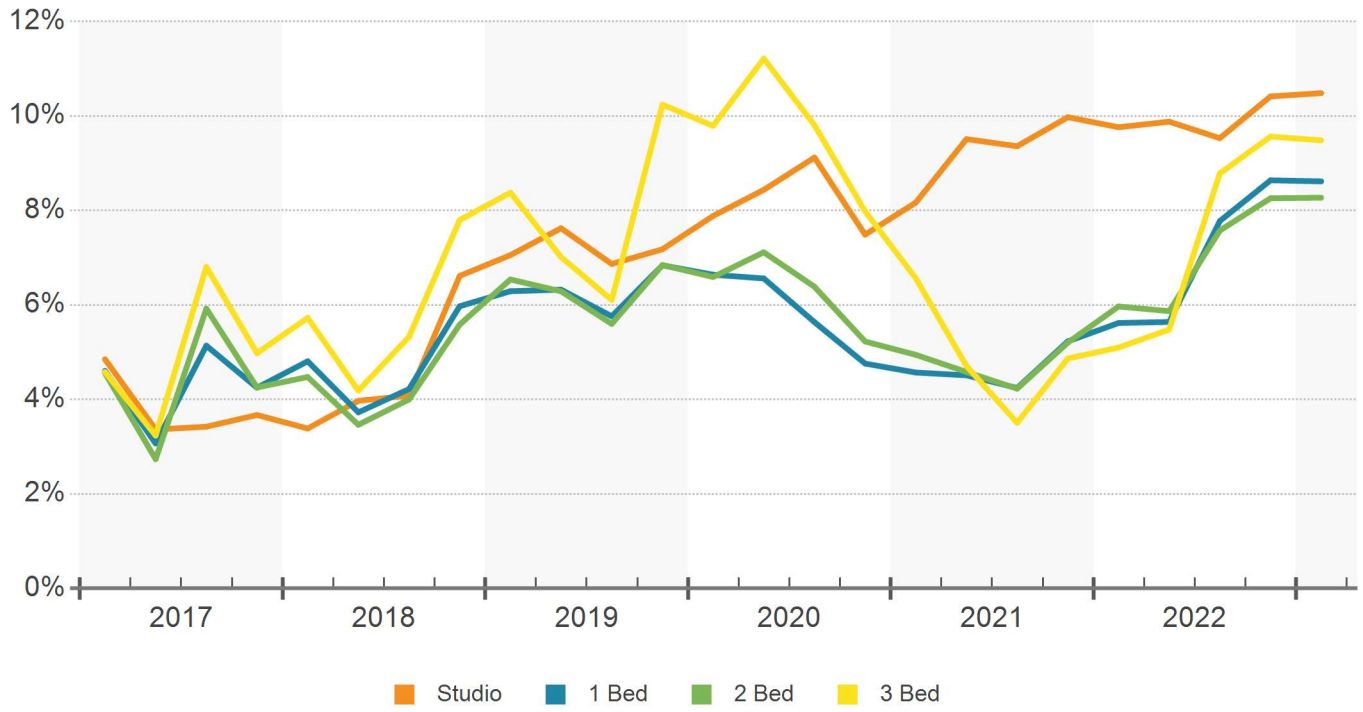

© 2023 CoStar Group - Licensed to Merchants Capital - 1108535

Rent

The Reno multifamily rent growth has been flat over the past 12 months. This activity is down significantly from the record high of 12% set in mid-2021. Reno's primary draw has been its mix of high quality of life and affordability as new residents flocked to the region. Despite the rent growth, Reno remains a relatively affordable option with an average rate of $1,510/month, below the national average of $1,630/month. The slowing in rent growth is primarily due to 2 factors. First, the wave of new supply in the region has increased the amount of competition for renters, increasing concessions simultaneously. Second, the willingness among prospective residents to relocate to a new metro has waned. Renters that were looking to find a new city largely have and enticing new residents without comparable employment options is difficult as employers look to bring talent back to the office in some capacity.

The development portion of the rent growth narrative is significant. Over the past year, the market has grown by 1,600 units, and another 4,500 are underway, creating significant risk of oversupply and depressing rent growth in the market. Deliveries tend to slow rent growth as competition for residents increases, especially when combined with slowing in-migration.

As mentioned, demand stemming from in-migration, specifically from California, seems to be slowing as overall activity from renters is down compared to 2021. With that said, Reno still enjoys being comparatively affordable and will likely draw new residents to the region as long as remote work remains a dominant economic theme. High levels of development will make rental increases challenging as renters are afforded increasing options in the market.

DAILY ASKING RENT PER SF

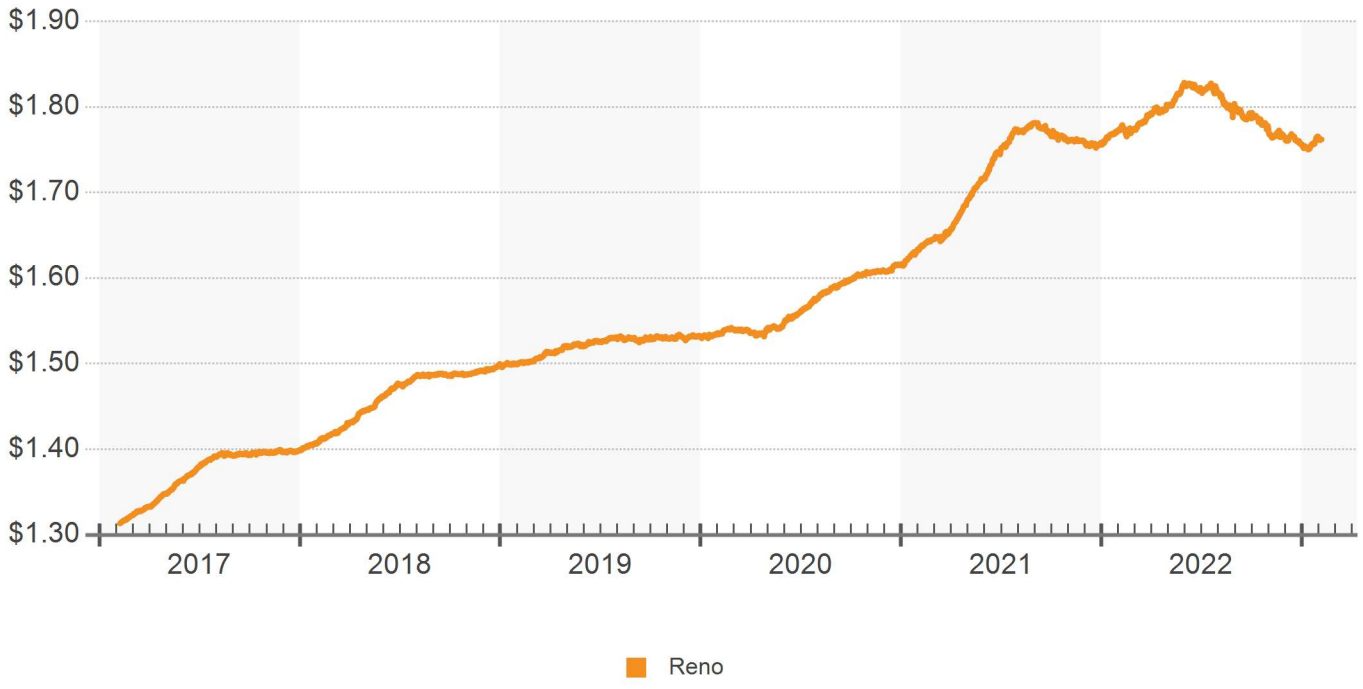

© 2023 CoStar Group - Licensed to Merchants Capital - 1108535

Rent

MARKET RENT PER UNIT & RENT GROWTH

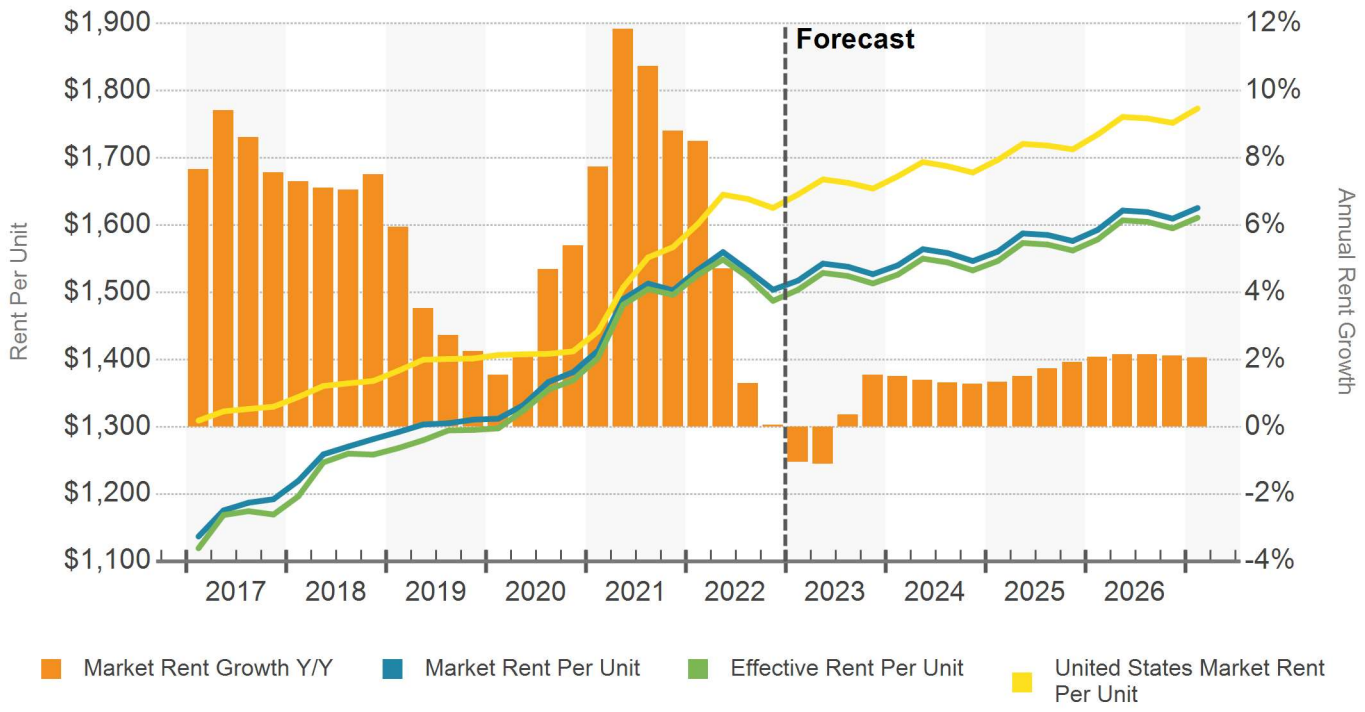

MARKET RENT PER UNIT BY BEDROOM

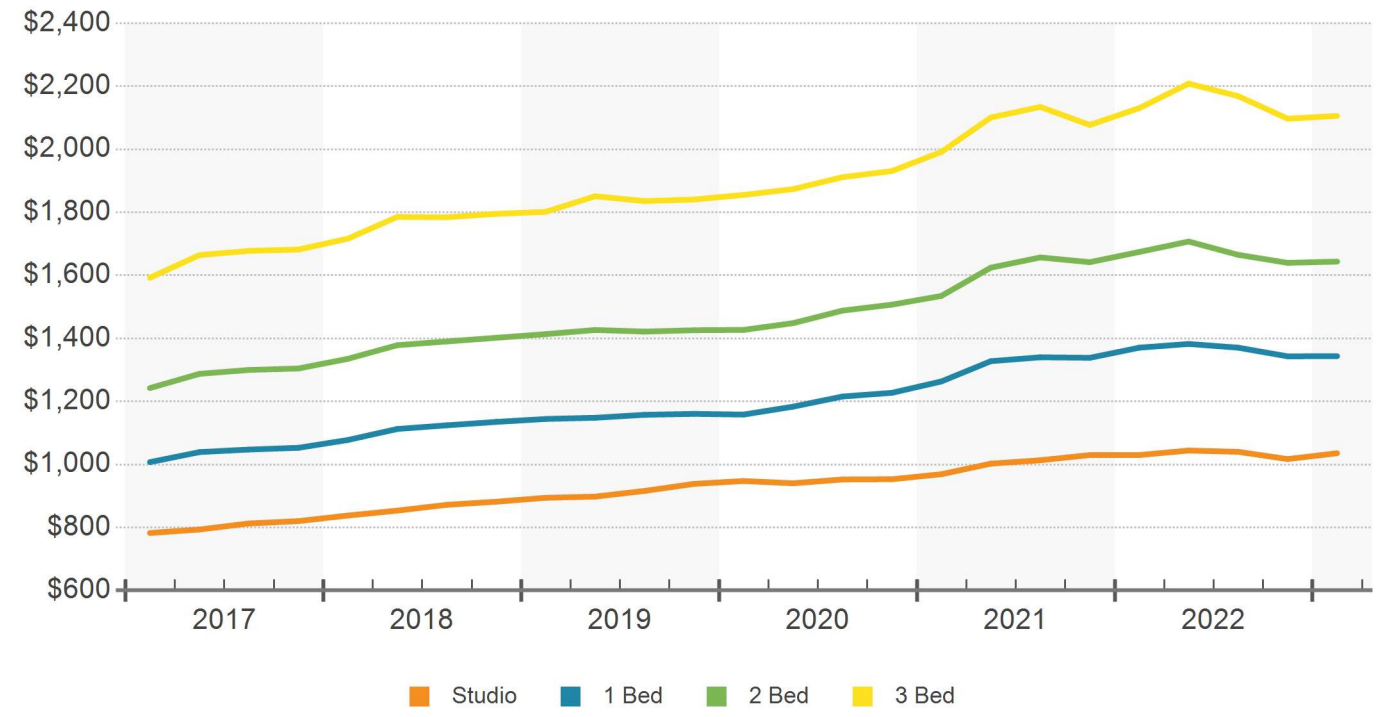

© 2023 CoStar Group - Licensed to Merchants Capital - 1108535

4 & 5 STAR EXPENSES PER SF (ANNUAL)

	Operating Expenses								Capital Expenditures			
Market / Cluster	Mgmt.	Admin.	Payroll	Water	Utilities	Maint.	Insurance	Taxes	Appliance	Structural	Other	Total
Reno	$0.40	$0.94	$0.68	$0.55	$0.71	$0.65	$0.24	$0.66	$0.10	$0.46	$0.47	$5.86
Downtown Reno	$0.38	$0.81	$0.64	$0.50	$0.65	$0.65	$0.23	$0.55	$0.09	$0.27	$0.47	$5.24
North Valleys	$0.40	$0.94	$0.67	$0.54	$0.73	$0.67	$0.25	$0.63	$0.10	$0.51	$0.49	$5.93
Old Southwest Reno	$0.43	$1.12	$0.89	$0.69	$0.90	$0.62	$0.17	$0.70	$0.12	$0.51	$0.40	$6.55
South Reno	$0.44	$0.94	$0.67	$0.54	$0.56	$0.53	$0.22	$0.86	$0.10	$0.27	$0.37	$5.50
Sparks	$0.40	$0.94	$0.67	$0.54	$0.73	$0.67	$0.25	$0.63	$0.10	$0.51	$0.49	$5.93
University	$0.40	$0.94	$0.67	$0.54	$0.73	$0.67	$0.25	$0.63	$0.10	$0.51	$0.49	$5.93
West Reno	$0.40	$0.94	$0.67	$0.54	$0.73	$0.67	$0.25	$0.63	$0.10	$0.51	$0.49	$5.93

Expenses are estimated using NCREIF, IREM, and CoStar data using the narrowest possible geographical definition from Zip Code to region.

3 STAR EXPENSES PER SF (ANNUAL)

	Operating Expenses								Capital Expenditures			
Market / Cluster	Mgmt.	Admin.	Payroll	Water	Utilities	Maint.	Insurance	Taxes	Appliance	Structural	Other	Total
Reno	$0.37	$0.60	$0.67	$0.51	$0.68	$0.61	$0.22	$0.46	$0.09	$0.04	$0.46	$4.71
Central/Airport	$0.35	$0.23	$0.72	$0.59	$0.88	$0.50	$0.23	$0.39	$0.09	$0.03	$0.46	$4.47
Downtown Reno	$0.37	$0.64	$0.65	$0.49	$0.64	$0.62	$0.22	$0.47	$0.09	$0.03	$0.45	$4.67
North Valleys	$0.38	$0.72	$0.64	$0.48	$0.61	$0.66	$0.23	$0.48	$0.09	$0.03	$0.46	$4.78
Old Southwest Reno	$0.40	$0.72	$0.70	$0.48	$0.60	$0.58	$0.16	$0.48	$0.11	$0.03	$0.38	$4.64
South Reno	$0.38	$0.72	$0.64	$0.48	$0.61	$0.66	$0.23	$0.48	$0.09	$0.03	$0.46	$4.78
Sparks	$0.38	$0.73	$0.64	$0.48	$0.61	$0.66	$0.23	$0.49	$0.09	$0.06	$0.46	$4.83
University	$0.38	$0.72	$0.64	$0.48	$0.61	$0.66	$0.23	$0.48	$0.09	$0.03	$0.46	$4.78
West Reno	$0.38	$0.73	$0.64	$0.48	$0.61	$0.66	$0.23	$0.49	$0.09	$0.05	$0.47	$4.83

Expenses are estimated using NCREIF, IREM, and CoStar data using the narrowest possible geographical definition from Zip Code to region.

1 & 2 STAR EXPENSES PER SF (ANNUAL)

	Operating Expenses								Capital Expenditures			
Market / Cluster	Mgmt.	Admin.	Payroll	Water	Utilities	Maint.	Insurance	Taxes	Appliance	Structural	Other	Total
Reno	$0.36	$0.58	$0.64	$0.48	$0.63	$0.58	$0.21	$0.44	$0.09	$0.03	$0.43	$4.47
Central/Airport	$0.33	$0.22	$0.69	$0.57	$0.81	$0.48	$0.22	$0.37	$0.09	$0.03	$0.44	$4.25
Downtown Reno	$0.36	$0.62	$0.64	$0.47	$0.61	$0.58	$0.20	$0.45	$0.09	$0.03	$0.42	$4.47
North Valleys	$0.36	$0.68	$0.61	$0.45	$0.58	$0.62	$0.22	$0.46	$0.09	$0.03	$0.44	$4.54
Old Southwest Reno	$0.39	$0.68	$0.67	$0.45	$0.58	$0.56	$0.15	$0.46	$0.10	$0.03	$0.36	$4.43
South Reno	$0.36	$0.68	$0.61	$0.45	$0.58	$0.62	$0.22	$0.46	$0.09	$0.03	$0.44	$4.54
Sparks	$0.36	$0.69	$0.61	$0.46	$0.58	$0.63	$0.22	$0.46	$0.09	$0.03	$0.44	$4.57
University	$0.36	$0.68	$0.61	$0.45	$0.58	$0.62	$0.22	$0.46	$0.09	$0.03	$0.44	$4.54
West Reno	$0.36	$0.68	$0.61	$0.45	$0.58	$0.62	$0.22	$0.46	$0.09	$0.03	$0.44	$4.54

Expenses are estimated using NCREIF, IREM, and CoStar data using the narrowest possible geographical definition from Zip Code to region.

© 2023 CoStar Group - Licensed to Merchants Capital - 1108535

Construction

The Reno multifamily market has enjoyed a significant expansion over the past few years as the market's population outpaced national growth rates for the past decade. One effect was more than 1,000 new multifamily units entering the market annually since 2018 and a total of 7,600 units over the past five years. The pandemic and employees' newfound ability to work remotely accelerated that trend, resulting in significant demand from new residents relocating to the area.

The result is sustained high levels of development, with 4,500 units currently under construction, accounting for another 10.6% increase in inventory. This is just off an all-time high in local multifamily construction in the market set in 2Q22. Projects are spread across the region, but the South Reno and Sparks submarkets share the lead in the area with four each. Developers have pulled back on construction starts and no new projects broke ground in the second half of 2022.

One of the largest projects in the market tis the Palomino at 1060 Damonte Parkway in South Reno. The 328-unit project broke ground in January 2022 with an expected completion date of May 2023. The project is being developed by the Wolff Company out of Scottsdale, Arizona, one of three properties in the market.

The amount of construction combined with slowing demand metrics leaves the market at risk of oversupply. Adding an additional 10.6% of vacant inventory to a vacancy rate that is well above the 10-year historical average will put significant pressure on rents and could lead to negative growth in coming periods.

DELIVERIES & DEMOLITIONS

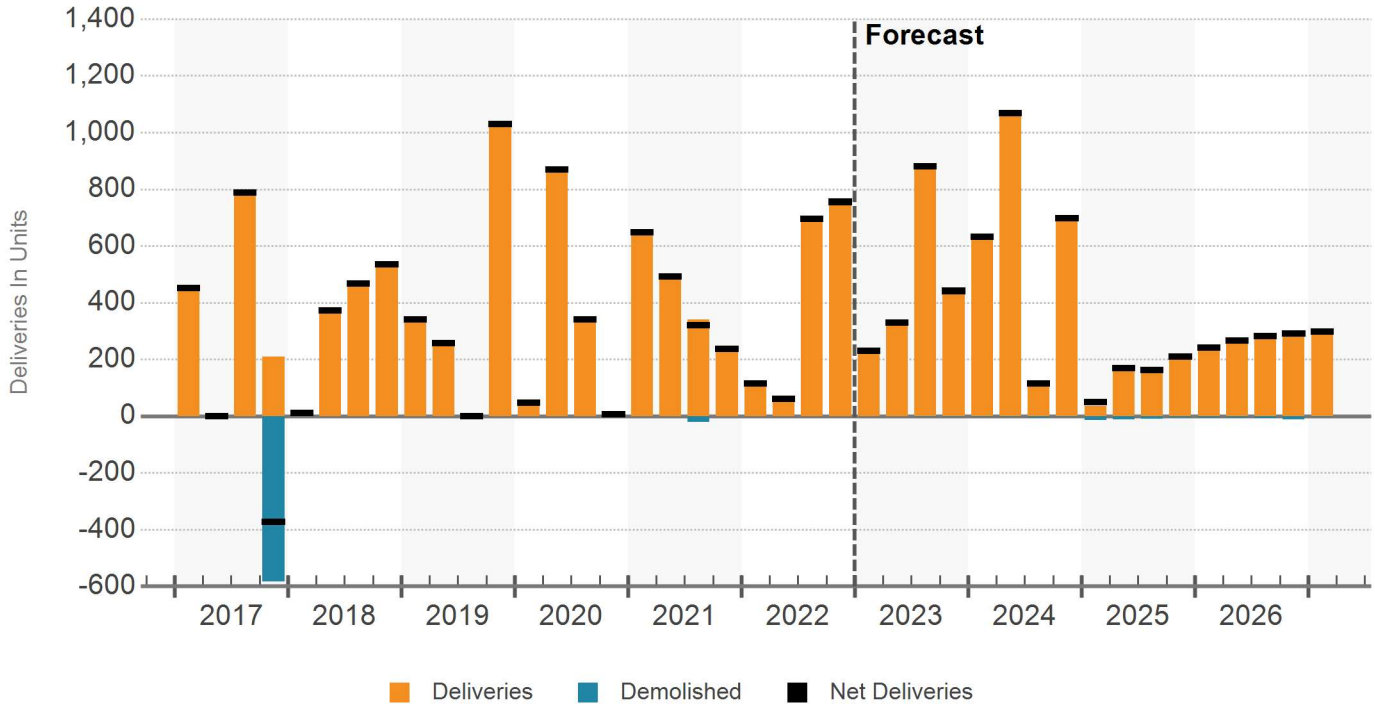

© 2023 CoStar Group - Licensed to Merchants Capital - 1108535

Under Construction Properties

Reno Multi-Family

Properties	Units	Percent of Inventory	Avg. No. Units
18	4,497	10.6%	250

UNDER CONSTRUCTION PROPERTIES

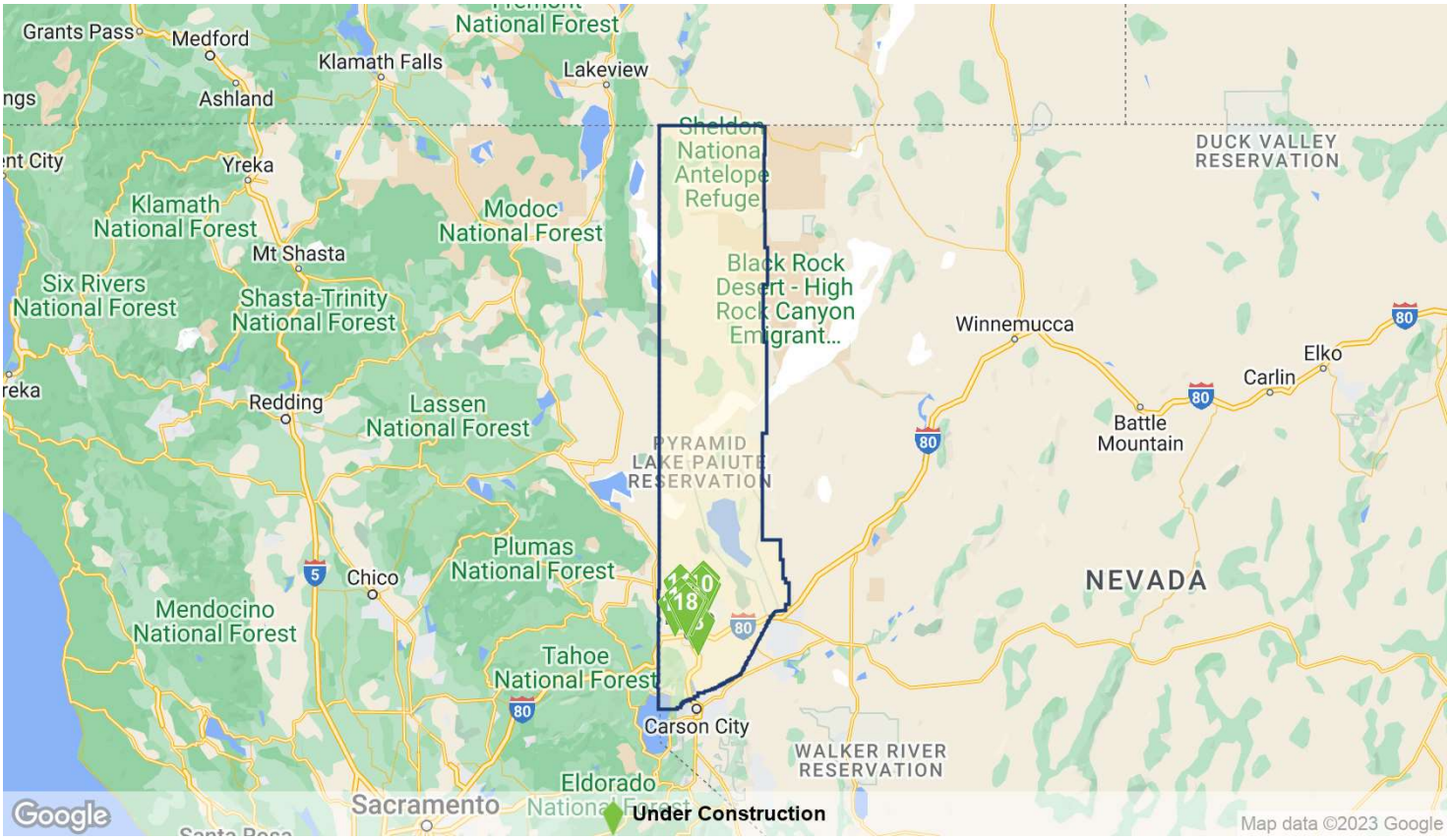

UNDER CONSTRUCTION

	Property Name/Address	Rating	Units	Stories	Start	Complete	Developer/Owner
1	Stonebrook Apartments 7900 Pyramid Way	★★★☆☆	396	1	Oct 2021	Oct 2023	Tanamera Construction, LLC Paul Willie
2	Ballpark Apartments 214 N Lake St	★★★★☆	369	5	Apr 2022	Jul 2023	Pacific Coast Development Pacific Coast Development
3	Ballpark Apartments 201 Evans Ave	★★★★☆	368	5	Feb 2022	Jun 2024	Pacific Development LLC Fennemore Craig P C
4	The Apex @Vista 6040 Vista Blvd	★★★★☆	360	-	May 2022	Apr 2024	TRU Development CO TRU Development CO
5	Atwood @ RED 2060 Experience Ave	★★★★☆	359	5	Jan 2021	Mar 2023	- -
6	The Overlook at Keyston… 3100 Leadership Pky	★★★☆☆	342	2	May 2022	May 2024	Tanamera Construction, LLC B & L Investments Inc.
7	The Halcyon at Reno 825 E Patriot Blvd	★★★★☆	330	3	Jul 2021	Jun 2023	Tanamera Construction, LLC Andrew McCullough

© 2023 CoStar Group - Licensed to Merchants Capital - 1108535

Under Construction Properties

UNDER CONSTRUCTION

	Property Name/Address	Rating	Units	Stories	Start	Complete	Developer/Owner
8	Palamino 1060 Damonte Pky	★★★★☆	328	3	Jan 2022	Sep 2023	The Wolff Company Damonte Ranch Commerce Cent…
9	Homecoming at Kiley Ra… 1234 Sabata Way	★★★☆☆	306	4	May 2022	Jun 2023	- -
10	Homecoming at Kiley Ra… 1234 Sabata Way	★★★★☆	306	3	Jun 2022	Jul 2023	Lewis Apartment Communities Mareddy
11	The Lakes at Lemmon V… 7711 Sky Vista Pky	★★★★☆	280	3	Jan 2021	Aug 2023	Bluth Construction Bluth Construction
12	The Edison 2450 Valley Rd	★★★★☆	232	7	Feb 2022	Aug 2023	Horizon Realty Advisors Horizon Realty Advisors
13	The Rivet 2050 Market St	★★★☆☆	216	4	Apr 2020	Mar 2023	BLC Builders Fortify Holdings
14	Ryland Apartments 517 Ryland St	★★★☆☆	118	5	Jun 2022	Dec 2023	- -
15	The Mod 2 344 W 2nd St	★★★★☆	69	5	May 2021	May 2023	Tanamera Construction, LLC Chris Vargas
16	Canyon's Edge Apartme… 6500 Sharlands Ave	★★★☆☆	48	3	Jun 2022	Jun 2023	BUILT. Stitser Properties
17	Bldg D 3150 Leadership Pky	★★★☆☆	36	3	Jan 2023	Jul 2024	Tanamera Construction, LLC Overlook at Keystone Canyon Inv…
18	700 Riverside Dr	★★★☆☆	34	4	May 2021	Mar 2023	Urban Real Estate Investments, L… -

© 2023 CoStar Group - Licensed to Merchants Capital - 1108535

After a recording setting in 2021, activity in 2022 accelerated. In the first quarter alone, sales volume reached $440 million, the second-highest annual figure ever recorded. Over the past 12 months, sales have totaled $637 million across 53 transactions. Activity has been centered around 3 Star and 4 & 5 Star properties recording $302 million and $214 million from 10 and 3 sales, respectively. Pointing to a small number of very high-value trades driving the sales volume figures.

A significant amount of this activity can be attributed to a single transaction. Local firm, ERGS divested eight properties across the market for a total of $303 million ($279,000/unit) in the largest ever multifamily sale in the market. MG Properties out of San Diego purchased nearly 1,100 units in late February, expanding its presence in the swelling Reno market.

Activity since has been slower but is still strong. The largest deal since the end of the first quarter was for Integra Peaks in South Reno by LDK Ventures, based in Sacramento. The 300 units property was completed earlier in 2022 and had already entirely leased. The new owner paid $118.5 million ($395,000 / unit) and is there only multifamily property in the market.

A number of recent deals point to the larger trend toward the institutionalization of Reno's apartment market. Over the past five years, these owners accounted for 42% of all acquisitions while only contributing 21% of the divestitures. If we include REITs alongside this group, it brings the acquisition's total to 50%. Meanwhile, private buyers are being incentivized to sell with market pricing reaching $250,000/unit, a hefty premium over the five-year average of $210,000/unit. As a result, these private owners account for 51% of all sellers over the past five years.

This level of activity is not expected to continue into 2023. Deal volume slowed in the fourth quarter and while the rate of interest rate increases has slowed, more are expected in the coming months. This is expected to hamper sales activity over the next year and possibly longer as pricing corrections and cap rate expansions have already begun.

SALES VOLUME & MARKET SALE PRICE PER UNIT

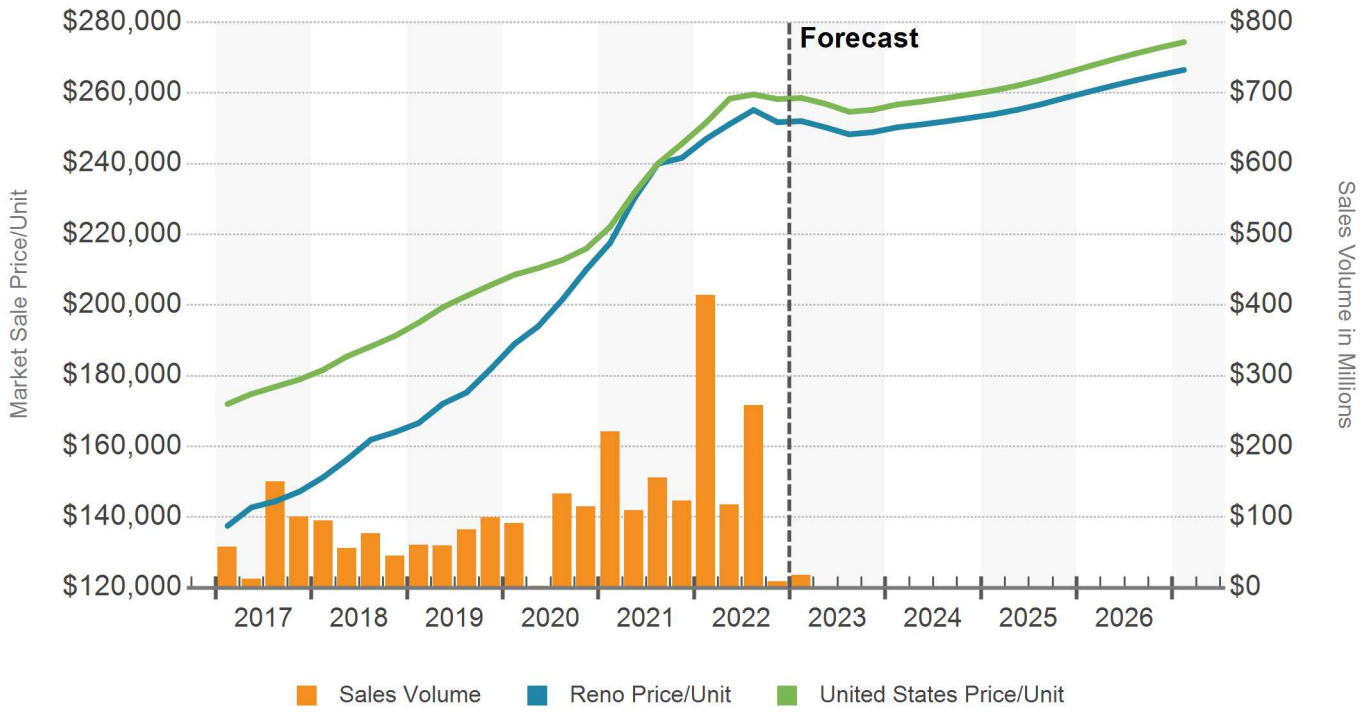

© 2023 CoStar Group - Licensed to Merchants Capital - 1108535

MARKET CAP RATE

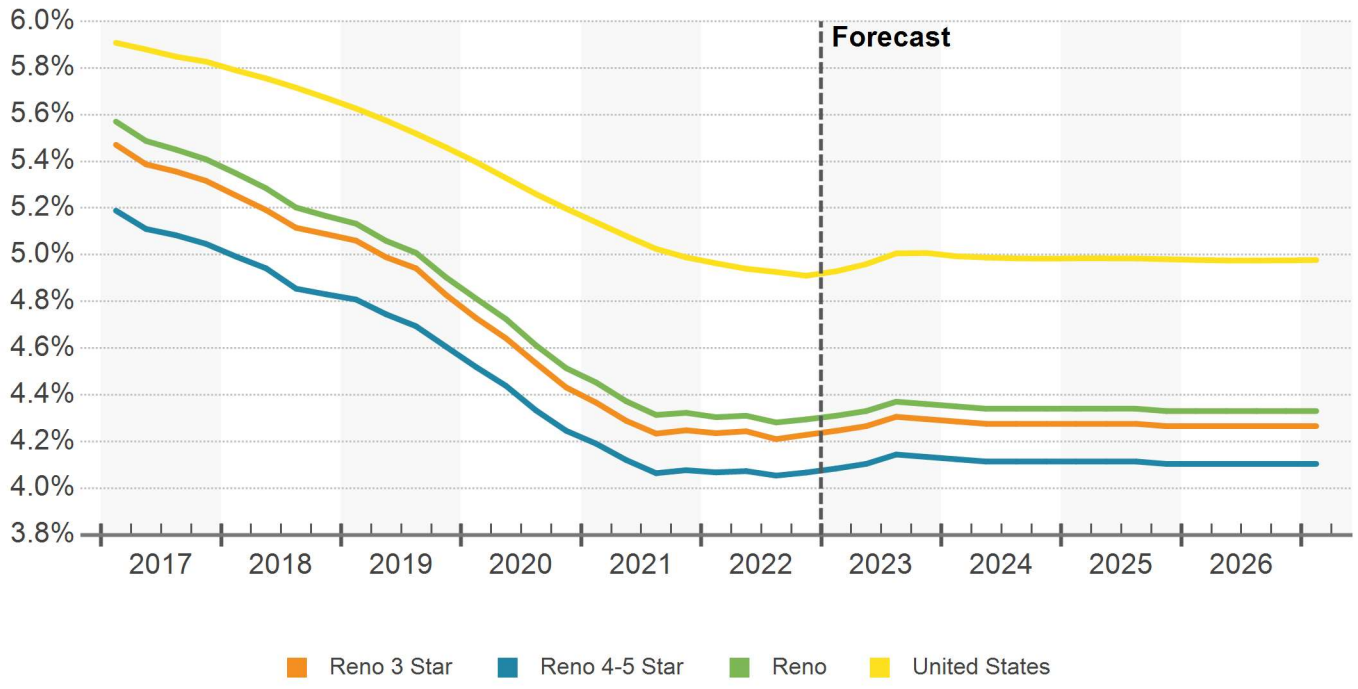

© 2023 CoStar Group - Licensed to Merchants Capital - 1108535

Sales Past 12 Months

Reno Multi-Family

Sale Comparables	Avg. Price/Unit (thous.)	Average Price (mil.)	Average Vacancy at Sale
47	$286	$19.7	4.4%

SALE COMPARABLE LOCATIONS

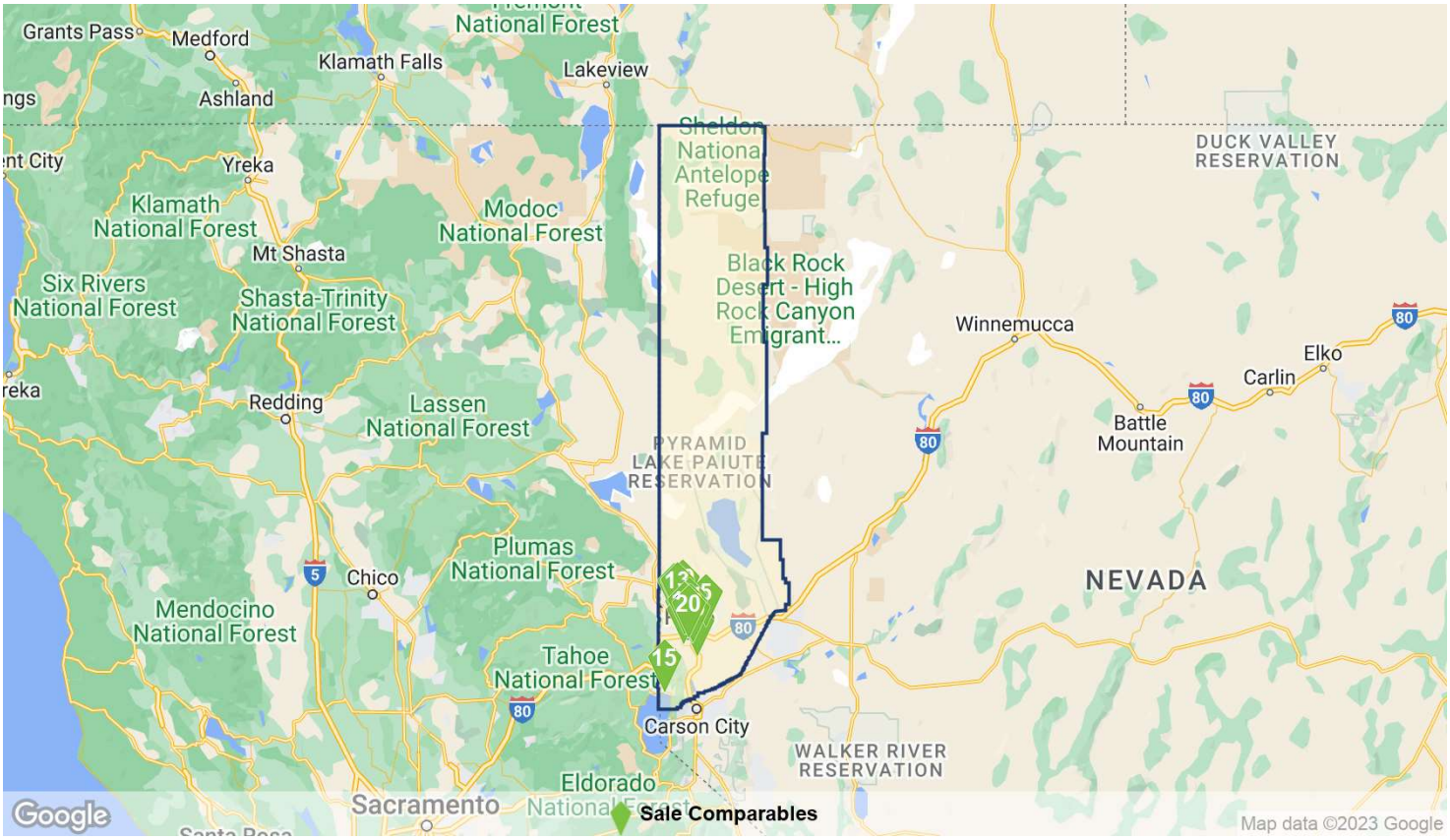

SALE COMPARABLES SUMMARY STATISTICS

Sales Attributes	Low	Average	Median	High
Sale Price	$525,000	$19,709,692	$2,587,500	$118,500,000
Price/Unit	$52,500	$285,855	$190,000	$593,750
Cap Rate	4.0%	5.2%	5.4%	6.5%
Vacancy Rate At Sale	0%	4.4%	0%	16.7%
Time Since Sale in Months	0.9	7.6	9.0	11.8
Property Attributes	**Low**	**Average**	**Median**	**High**
Property Size in Units	5	64	12	352
Number of Floors	1	2	2	3
Average Unit SF	59	696	696	1,612
Year Built	1932	1975	1973	2022
Star Rating	★★☆☆☆	★★☆☆☆ 2.4	★★☆☆☆	★★★★☆

© 2023 CoStar Group - Licensed to Merchants Capital - 1108535

Sales Past 12 Months

RECENT SIGNIFICANT SALES

	Property Name/Address	Property Information				Sale Information			
		Rating	Yr Built	Units	Vacancy	Sale Date	Price	Price/Unit	Price/SF
1	Integra Peaks 875 Damonte Ranch Pky	★★★☆☆	2022	300	0%	9/2/2022	$118,500,000	$395,000	$593
2	North Peak Apartments 8001 Military Rd	★★★★☆	2019	352	1.7%	2/23/2022	$117,200,000	$332,954	$291
3	Apex at Sky Valley 1555 Sky Valley Dr	★★★☆☆	1990	300	4.7%	6/29/2022	$101,250,000	$337,500	$342
4	Silver Lake Apartments 7350 Silver Lake Rd	★★★★☆	2003	352	1.1%	2/23/2022	$96,200,000	$273,295	$285
5	High Rock 5300 5300 Los Altos Pky	★★★★☆	2003	264	5.3%	9/29/2022	$88,000,000	$333,333	$355
6	Sierra Sage Apartments 6060 Silver Lake Rd	★★★☆☆	1991	232	0%	2/23/2022	$58,900,000	$253,879	$278
7	Ascent on Steamboat 3300 Skyline Blvd	★★★☆☆	1973	204	10.3%	3/15/2022	$56,000,000	$274,509	$296
8	Peaks at the Park 950 Nutmeg Pl	★★☆☆☆	1979	213	13.2%	7/29/2022	$47,000,000	$220,657	$255
9	Kirman Garden 444 Kirman Ave	★★☆☆☆	1977	84	2.4%	1/13/2023	$14,250,000	$169,642	$256
10	Vale Apartments 9401 Lemmon Dr	★★★☆☆	2015	40	2.5%	2/23/2022	$14,150,000	$353,750	$470
11	Oak Manor 1055-1075 Oak St	★★☆☆☆	1983	55	5.5%	2/23/2022	$9,384,920	$170,634	$234
12	Moran Apartments 725-745 Moran St	★★☆☆☆	1971	28	0%	2/28/2022	$6,375,000	$227,678	$206
13	Peavine Peak 5910 Silver Lake Rd	★★☆☆☆	1973	30	0%	2/23/2022	$5,300,000	$176,666	$202
14	Creekside Apartments 2400-2450 Sutro St	★★☆☆☆	1987	32	3.1%	12/8/2022	$4,925,000	$153,906	$233
15	795 Mays Blvd	★★★☆☆	1982	8	0%	3/10/2022	$4,750,000	$593,750	$368
16	Plaza Apartments 777 W 5th St	★★☆☆☆	1962	34	0%	2/14/2022	$4,550,000	$133,823	$223
17	Carlin Apartments 1380 Carlin St	★★☆☆☆	1973	22	0%	2/28/2022	$4,180,000	$190,000	$282
18	Mountain View Apartments 1450 Mill St	★★☆☆☆	1985	25	16.0%	2/28/2022	$3,870,000	$154,800	$323
19	3445-3485 Neil Rd	★★☆☆☆	1966	12	0%	3/28/2022	$3,000,000	$250,000	$257
20	123 Wonder St	★★★☆☆	2000	8	0%	6/1/2022	$2,600,000	$325,000	$442

© 2023 CoStar Group - Licensed to Merchants Capital - 1108535

After a short-term spike in the unemployment rate at the start of the pandemic, Reno has quickly rebounded, with the unemployment rate averaging 2.9% over the past year, comparable to 2017 levels.

Bordering the California/Nevada state line, Reno is located more than 400 miles northwest of Las Vegas and about 130 miles east of Sacramento. The metro's business-friendly environment, proximity to Silicon Valley, and low cost of living made Reno an attractive destination for companies in recent years and helped the local economy become increasingly diversified. This helped spur growth as the economy reopened. Reno has become a popular relocation destination for high-skilled workers looking for more space at a lower cost of living. The influx of population to the region has helped to spur job growth in the market. Office-using jobs have grown at a particularly high rate, increasing by more than 5% year over year, surpassing average growth rates for the past five years.

Prior to the pandemic, employment growth in Reno had been among the highest in the nation for many years: From 2015–19, job growth topped 4%. Several major corporations announced huge expansions here in the past decade, including Apple, Google, Walmart, and eBay. Apple operates a 1 million-SF data center in Reno Technology Park and in 2018 completed a 27,000-SF warehouse in Central Reno. Meanwhile, Google acquired over 1,200 acres of land in 2017 that became a data center.

However, Tesla's Gigafactory is the local economy's new crown jewel. Projected to employ at least 10,000 people, an increase from the original projection of 6,500 workers, the second phase of the Gigafactory, which measures 3.8 million SF, opened in 2019.

While Silicon Valley expansions point to the market's potential, the bread-and-butter of the local economy remains trade and transportation. Limited regulation and the ability to ship to nine Western states on a next-day basis are turning the city into a regional logistics hub. Recent companies to open fulfillment centers in the area include Penguin Random House, Arrowhead Electronics, Panasonic, and Fosdick, and these helped push the trade sector to about 12% above its pre-Great Recession peak. Like their office-using counterparts, manufacturing and trade jobs have grown, as well, increasing by 6.8% and 5.3% year over year, respectively, as of February 2020.

RENO EMPLOYMENT BY INDUSTRY IN THOUSANDS

	CURRENT JOBS		CURRENT GROWTH		10 YR HISTORICAL		5 YR FORECAST	
Industry	Jobs	LQ	Market	US	Market	US	Market	US
Manufacturing	31	1.4	5.85%	3.06%	10.11%	0.79%	1.94%	-0.02%
Trade, Transportation and Utilities	59	1.2	2.79%	1.69%	3.13%	1.18%	0.47%	0.08%
Retail Trade	25	0.9	2.58%	0.77%	1.81%	0.56%	0.39%	0.08%
Financial Activities	11	0.7	-1.23%	1.59%	2.04%	1.41%	0.56%	0.10%
Government	29	0.8	-0.96%	1.26%	0.25%	0.24%	1.09%	0.55%
Natural Resources, Mining and Construction	22	1.5	5.13%	3.30%	8.52%	2.47%	1.04%	0.24%
Education and Health Services	29	0.7	3.48%	3.69%	2.86%	1.73%	0.60%	0.55%
Professional and Business Services	34	0.9	3.33%	3.01%	2.60%	2.11%	0.74%	0.35%
Information	3	0.6	2.31%	5.24%	3.12%	1.35%	0.19%	0.20%
Leisure and Hospitality	37	1.4	6.85%	6.18%	0.95%	1.38%	0.32%	1.09%
Other Services	7	0.7	-3.60%	3.03%	0.89%	0.58%	0.39%	0.35%
Total Employment	261	1.0	3.25%	2.91%	3.11%	1.30%	0.79%	0.38%

Source: Oxford Economics
LQ = Location Quotient

© 2023 CoStar Group - Licensed to Merchants Capital - 1108535

Economy

JOB GROWTH (YOY)

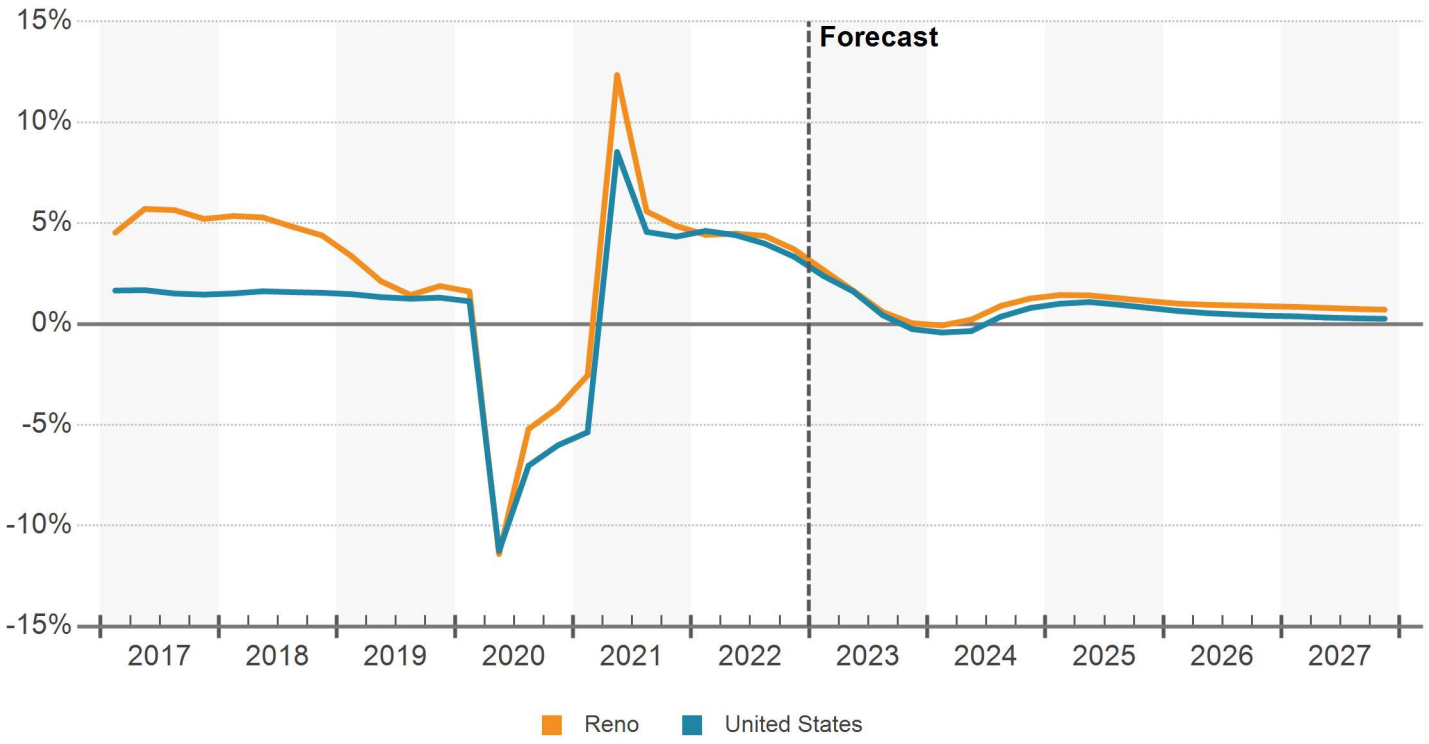

Source: Oxford Economics

UNEMPLOYMENT RATE (%)

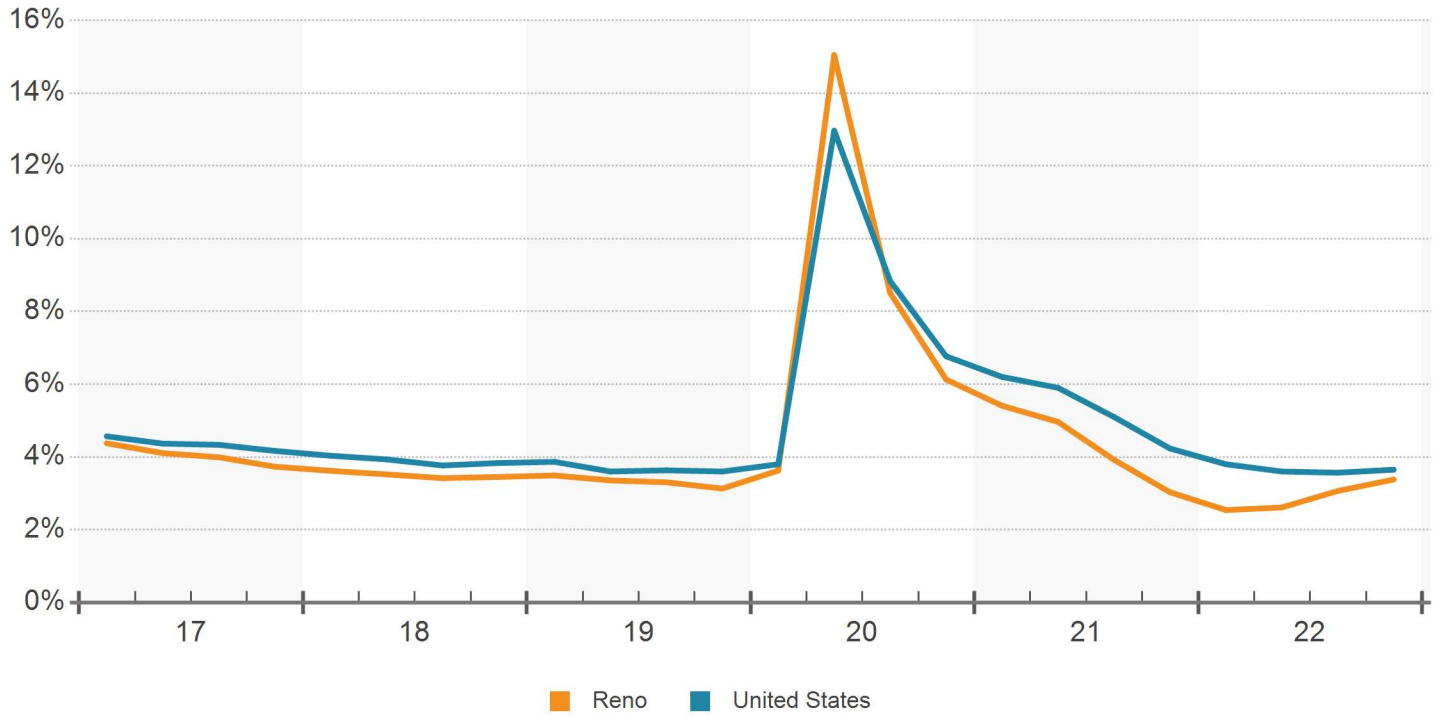

© 2023 CoStar Group - Licensed to Merchants Capital - 1108535

NET EMPLOYMENT CHANGE (YOY)

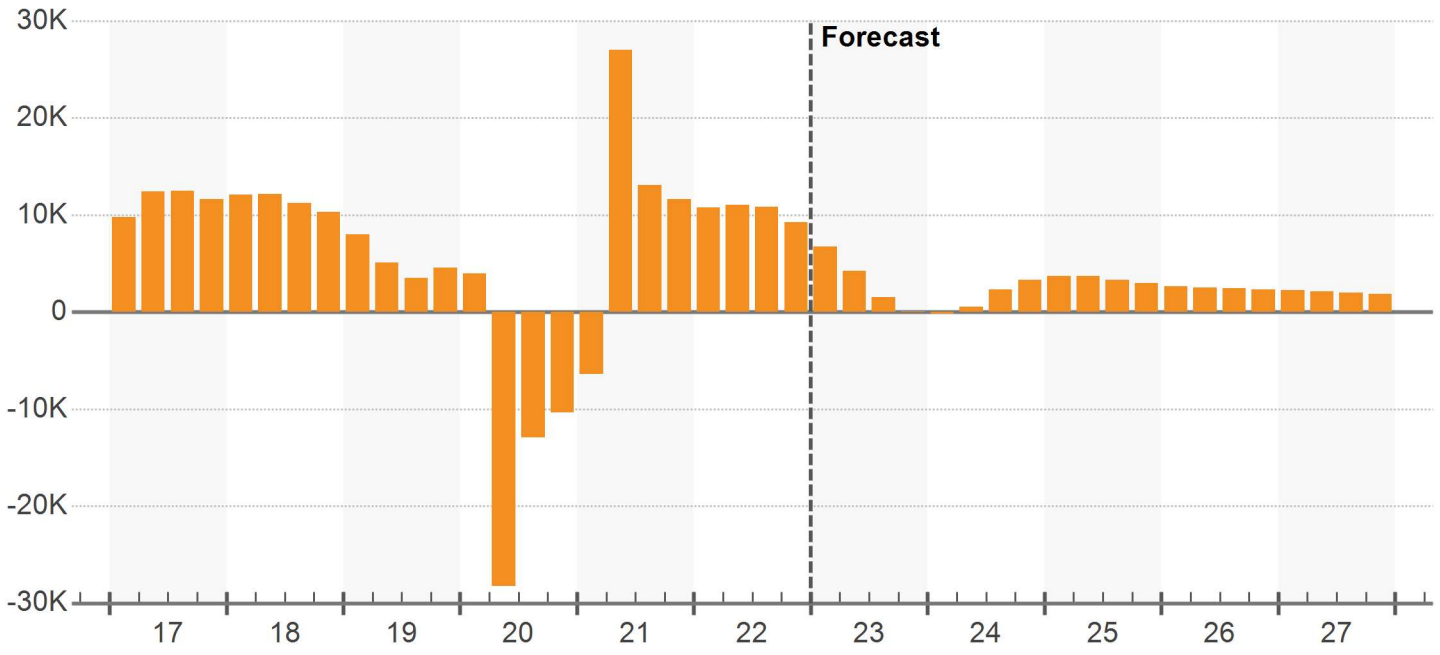

MEDIAN HOUSEHOLD INCOME

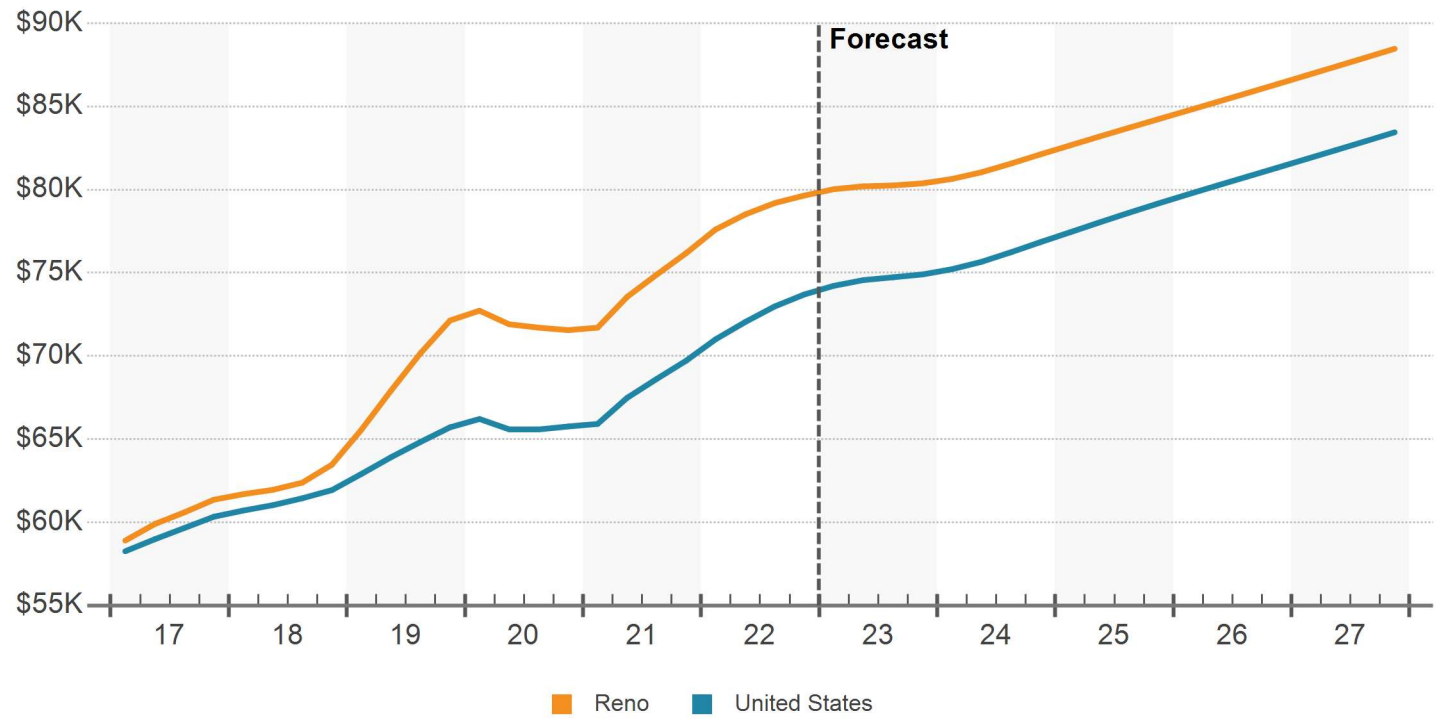

© 2023 CoStar Group - Licensed to Merchants Capital - 1108535

POPULATION GROWTH (YOY %)

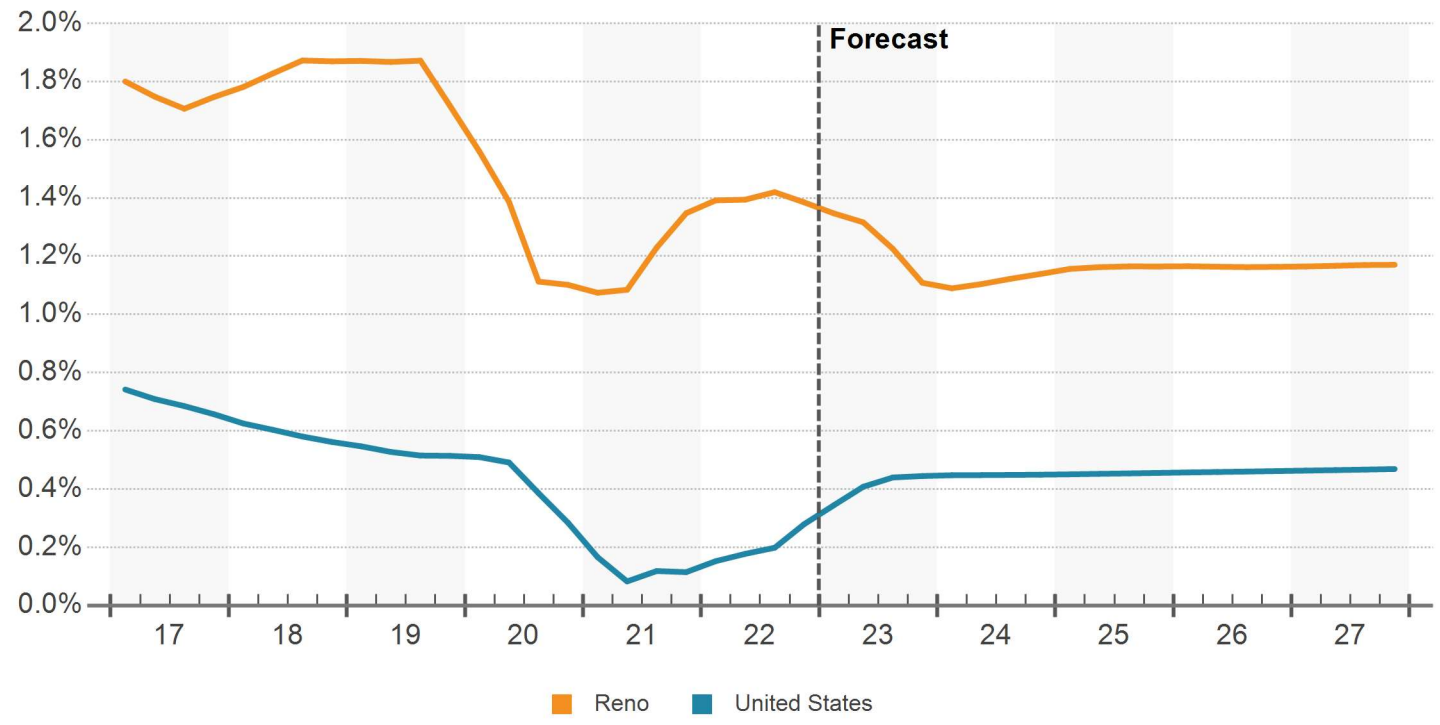

NET POPULATION CHANGE (YOY)

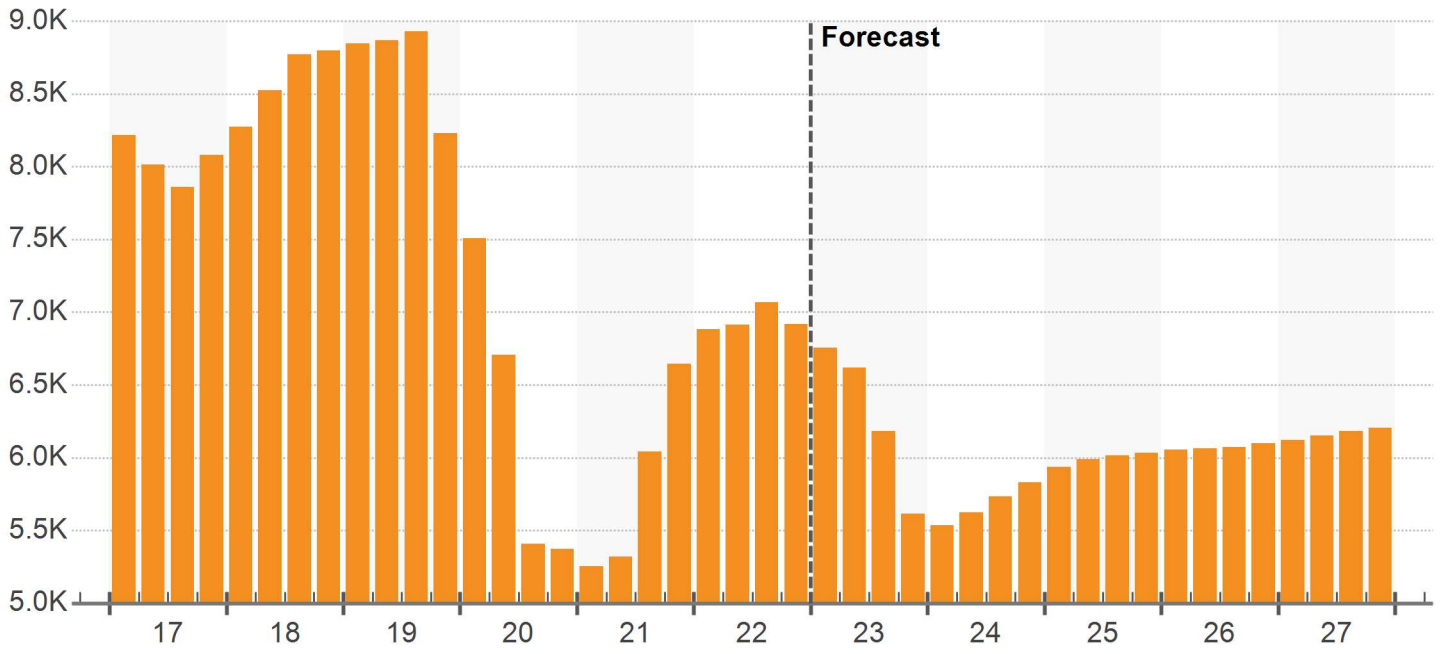

© 2023 CoStar Group - Licensed to Merchants Capital - 1108535

Economy

DEMOGRAPHIC TRENDS

	Current Level		12 Month Change		10 Year Change		5 Year Forecast	
Demographic Category	Metro	US	Metro	US	Metro	US	Metro	US
Population	507,243	333,090,750	1.4%	0.3%	1.5%	0.5%	1.1%	0.5%
Households	205,589	129,225,570	2.0%	0.9%	2.4%	0.8%	1.3%	0.6%
Median Household Income	$79,811	$73,922	3.9%	5.2%	4.9%	3.7%	2.1%	2.5%
Labor Force	258,697	164,976,672	2.5%	1.3%	1.7%	0.6%	1.0%	0.4%
Unemployment	3.4%	3.7%	0.6%	-0.4%	-0.7%	-0.4%	-	-

Source: Oxford Economics

POPULATION GROWTH

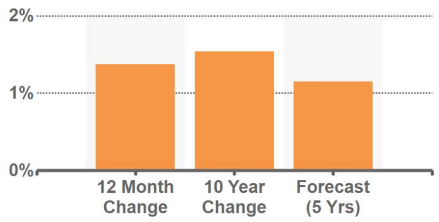

LABOR FORCE GROWTH

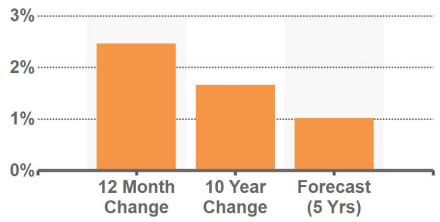

INCOME GROWTH

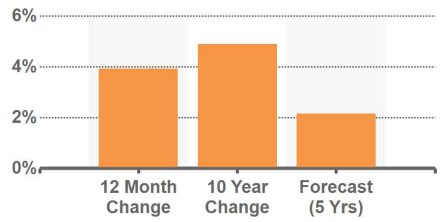

Source: Oxford Economics

© 2023 CoStar Group - Licensed to Merchants Capital - 1108535

Submarkets

RENO SUBMARKETS

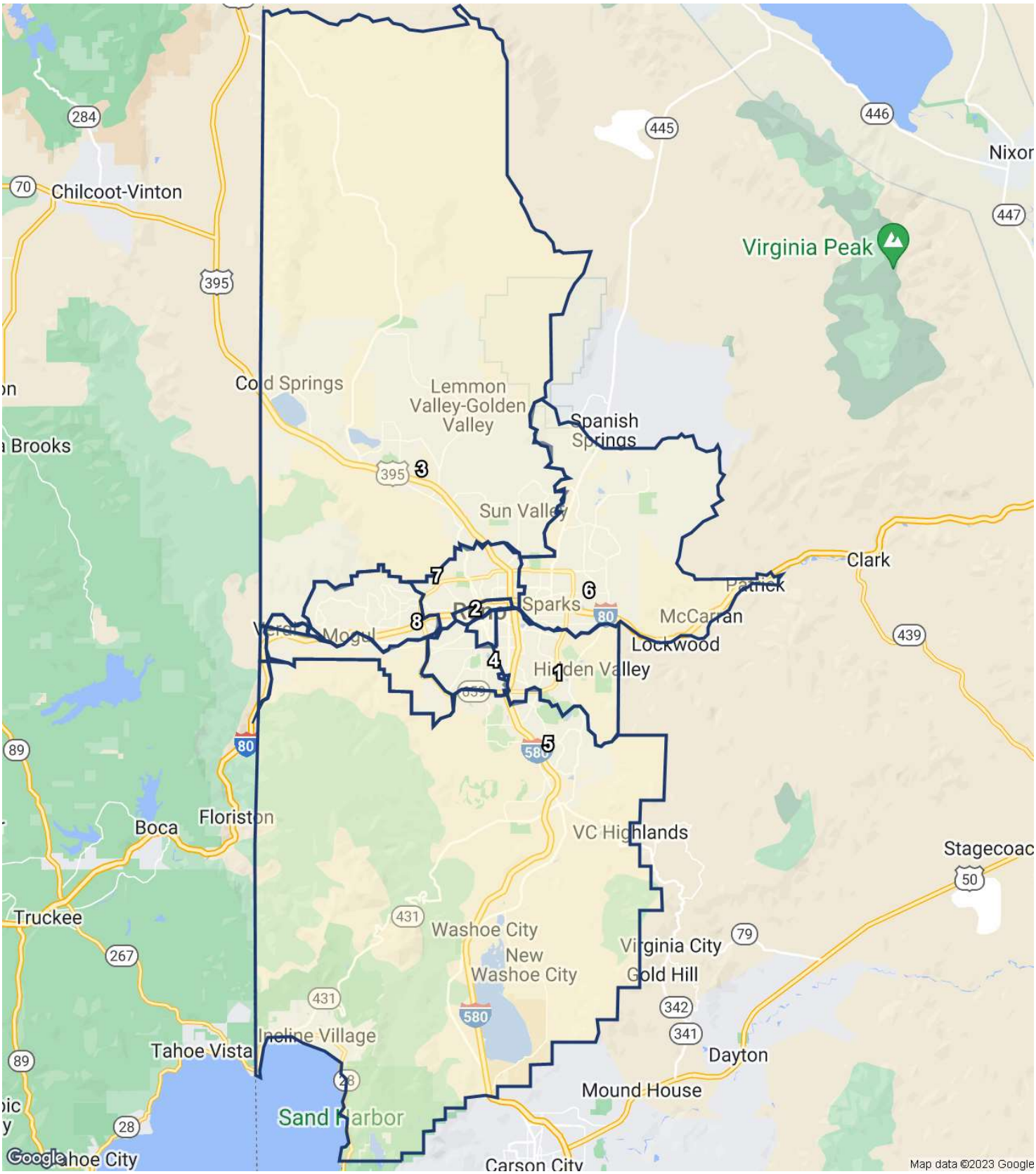

© 2023 CoStar Group - Licensed to Merchants Capital - 1108535

Submarkets

SUBMARKET INVENTORY

		Inventory				12 Month Deliveries				Under Construction			
No.	Submarket	Bldgs	Units	% Market	Rank	Bldgs	Units	Percent	Rank	Bldgs	Units	Percent	Rank
1	Central/Airport	121	6,531	15.3%	3	1	27	0.4%	5	2	575	8.8%	5
2	Downtown Reno	249	4,422	10.4%	4	3	71	1.6%	4	5	958	21.7%	2
3	North Valleys	16	2,578	6.1%	8	0	0	0%	-	1	280	10.9%	6
4	Old Southwest Reno	58	3,927	9.2%	6	0	0	0%	-	0	0	0%	-
5	South Reno	27	6,763	15.9%	2	2	560	8.3%	2	2	658	9.7%	3
6	Sparks	109	10,222	24.0%	1	4	585	5.7%	1	4	1,368	13.4%	1
7	University	113	4,301	10.1%	5	2	349	8.1%	3	3	610	14.2%	4
8	West Reno	19	3,821	9.0%	7	0	0	0%	-	1	48	1.3%	7

SUBMARKET RENT

		Asking Rents				Effective Rents					
No.	Market	Per Unit	Per SF	Rank	Yr. Growth	Per Unit	Per SF	Rank	Yr. Growth	Concession	Rank
1	Central/Airport	$1,387	$1.78	3	-1.4%	$1,372	$1.76	3	-2.2%	1.1%	4
2	Downtown Reno	$1,092	$2.20	1	-0.2%	$1,079	$2.18	1	-0.9%	1.2%	2
3	North Valleys	$1,484	$1.55	8	-3.5%	$1,475	$1.54	8	-3.9%	0.6%	7
4	Old Southwest Reno	$1,368	$1.67	6	1.2%	$1,351	$1.65	6	0.2%	1.3%	1
5	South Reno	$1,844	$1.88	2	0.1%	$1,827	$1.87	2	-0.4%	0.9%	5
6	Sparks	$1,580	$1.75	4	0.1%	$1,567	$1.74	4	0%	0.8%	6
7	University	$1,282	$1.66	7	-1.3%	$1,268	$1.65	7	-2.2%	1.1%	3
8	West Reno	$1,651	$1.70	5	-1.5%	$1,645	$1.69	5	-1.3%	0.4%	8

SUBMARKET VACANCY & ABSORPTION

		Vacancy			12 Month Absorption			
No.	Submarket	Units	Percent	Rank	Units	% of Inv	Rank	Construc. Ratio
1	Central/Airport	555	8.5%	5	148	2.3%	2	0.2
2	Downtown Reno	370	8.4%	4	(78)	-1.8%	7	-
3	North Valleys	212	8.2%	3	(140)	-5.4%	8	-
4	Old Southwest Reno	243	6.2%	2	(49)	-1.2%	6	-
5	South Reno	828	12.2%	8	(48)	-0.7%	5	-
6	Sparks	882	8.6%	6	275	2.7%	1	2.1
7	University	400	9.3%	7	101	2.4%	3	2.8
8	West Reno	176	4.6%	1	83	2.2%	4	-

© 2023 CoStar Group - Licensed to Merchants Capital - 1108535

OVERALL SUPPLY & DEMAND

	Inventory			Absorption		
Year	Units	Growth	% Growth	Units	% of Inv	Construction Ratio
2027	49,804	1,195	2.5%	1,352	2.7%	0.9
2026	48,609	1,080	2.3%	1,646	3.4%	0.7
2025	47,529	588	1.3%	1,760	3.7%	0.3
2024	46,941	2,510	5.6%	1,407	3.0%	1.8
2023	44,431	1,880	4.4%	507	1.1%	3.7
YTD	42,565	14	0%	12	0%	1.2
2022	42,551	1,627	4.0%	238	0.6%	6.8
2021	40,924	1,696	4.3%	1,540	3.8%	1.1
2020	39,228	1,262	3.3%	1,807	4.6%	0.7
2019	37,966	1,625	4.5%	1,111	2.9%	1.5
2018	36,341	1,383	4.0%	714	2.0%	1.9
2017	34,958	864	2.5%	791	2.3%	1.1
2016	34,094	649	1.9%	637	1.9%	1.0
2015	33,445	269	0.8%	463	1.4%	0.6
2014	33,176	626	1.9%	755	2.3%	0.8
2013	32,550	0	0%	458	1.4%	0
2012	32,550	(179)	-0.5%	(34)	-0.1%	5.3
2011	32,729	0	0%	250	0.8%	0

4 & 5 STAR SUPPLY & DEMAND

	Inventory			Absorption		
Year	Units	Growth	% Growth	Units	% of Inv	Construction Ratio
2027	19,960	1,209	6.4%	1,307	6.5%	0.9
2026	18,751	1,094	6.2%	1,338	7.1%	0.8
2025	17,657	569	3.3%	1,183	6.7%	0.5
2024	17,088	1,721	11.2%	855	5.0%	2.0
2023	15,367	1,211	8.6%	350	2.3%	3.5
YTD	14,156	0	0%	1	0%	0
2022	14,156	436	3.2%	175	1.2%	2.5
2021	13,720	1,625	13.4%	1,384	10.1%	1.2
2020	12,095	932	8.3%	1,337	11.1%	0.7
2019	11,163	1,472	15.2%	1,084	9.7%	1.4
2018	9,691	1,317	15.7%	752	7.8%	1.8
2017	8,374	1,448	20.9%	1,421	17.0%	1.0
2016	6,926	624	9.9%	548	7.9%	1.1
2015	6,302	0	0%	(2)	0%	0
2014	6,302	338	5.7%	416	6.6%	0.8
2013	5,964	0	0%	97	1.6%	0
2012	5,964	0	0%	61	1.0%	0
2011	5,964	0	0%	107	1.8%	0

© 2023 CoStar Group - Licensed to Merchants Capital - 1108535

3 STAR SUPPLY & DEMAND

	Inventory			Absorption		
Year	Units	Growth	% Growth	Units	% of Inv	Construction Ratio
2027	17,867	0	0%	72	0.4%	0
2026	17,867	0	0%	328	1.8%	0
2025	17,867	34	0.2%	599	3.4%	0.1
2024	17,833	802	4.7%	572	3.2%	1.4
2023	17,031	674	4.1%	231	1.4%	2.9
YTD	16,371	14	0.1%	19	0.1%	0.7
2022	16,357	1,191	7.9%	215	1.3%	5.5
2021	15,166	91	0.6%	177	1.2%	0.5
2020	15,075	330	2.2%	392	2.6%	0.8
2019	14,745	153	1.0%	108	0.7%	1.4
2018	14,592	66	0.5%	7	0%	9.4
2017	14,526	(584)	-3.9%	(678)	-4.7%	0.9
2016	15,110	25	0.2%	62	0.4%	0.4
2015	15,085	274	1.8%	300	2.0%	0.9
2014	14,811	288	2.0%	293	2.0%	1.0
2013	14,523	0	0%	189	1.3%	0
2012	14,523	54	0.4%	144	1.0%	0.4
2011	14,469	0	0%	135	0.9%	0

1 & 2 STAR SUPPLY & DEMAND

	Inventory			Absorption		
Year	Units	Growth	% Growth	Units	% of Inv	Construction Ratio
2027	11,977	(14)	-0.1%	(27)	-0.2%	0.5
2026	11,991	(14)	-0.1%	(20)	-0.2%	0.7
2025	12,005	(15)	-0.1%	(22)	-0.2%	0.7
2024	12,020	(13)	-0.1%	(20)	-0.2%	0.7
2023	12,033	(5)	0%	(74)	-0.6%	0.1
YTD	12,038	0	0%	(8)	-0.1%	0
2022	12,038	0	0%	(152)	-1.3%	0
2021	12,038	(20)	-0.2%	(21)	-0.2%	1.0
2020	12,058	0	0%	78	0.6%	0
2019	12,058	0	0%	(81)	-0.7%	0
2018	12,058	0	0%	(45)	-0.4%	0
2017	12,058	0	0%	48	0.4%	0
2016	12,058	0	0%	27	0.2%	0
2015	12,058	(5)	0%	165	1.4%	0
2014	12,063	0	0%	46	0.4%	0
2013	12,063	0	0%	172	1.4%	0
2012	12,063	(233)	-1.9%	(239)	-2.0%	1.0
2011	12,296	0	0%	8	0.1%	0

© 2023 CoStar Group - Licensed to Merchants Capital - 1108535

OVERALL VACANCY & RENT

	Vacancy			Market Rent				Effective Rents	
Year	Units	Percent	Ppts Chg	Per Unit	Per SF	% Growth	Ppts Chg	Units	Per SF
2027	4,243	8.5%	(0.5)	$1,640	$1.93	1.9%	(0.2)	$1,625	$1.91
2026	4,400	9.1%	(1.4)	$1,610	$1.89	2.1%	0.2	$1,595	$1.87
2025	4,966	10.4%	(2.6)	$1,576	$1.85	1.9%	0.6	$1,562	$1.84
2024	6,138	13.1%	1.7	$1,546	$1.82	1.3%	(0.3)	$1,533	$1.80
2023	5,039	11.3%	2.7	$1,527	$1.79	1.5%	1.5	$1,513	$1.78
YTD	3,665	8.6%	0	$1,508	$1.77	-0.5%	(0.6)	$1,494	$1.75
2022	3,663	8.6%	3.1	$1,504	$1.76	0.1%	(8.7)	$1,487	$1.74
2021	2,273	5.6%	0.2	$1,503	$1.76	8.8%	3.4	$1,496	$1.75
2020	2,113	5.4%	(1.6)	$1,381	$1.62	5.4%	3.1	$1,369	$1.60
2019	2,657	7.0%	1.1	$1,311	$1.54	2.3%	(5.3)	$1,295	$1.52
2018	2,139	5.9%	1.7	$1,282	$1.50	7.5%	(0.1)	$1,259	$1.47
2017	1,470	4.2%	0.2	$1,192	$1.40	7.6%	0.4	$1,170	$1.37
2016	1,381	4.1%	0	$1,108	$1.30	7.2%	0.9	$1,094	$1.28
2015	1,371	4.1%	(0.6)	$1,034	$1.21	6.3%	2.9	$1,019	$1.19
2014	1,565	4.7%	(0.5)	$973	$1.14	3.4%	0.2	$962	$1.13
2013	1,694	5.2%	(1.4)	$942	$1.10	3.1%	1.0	$933	$1.09
2012	2,153	6.6%	(0.4)	$913	$1.07	2.1%	0.9	$902	$1.06
2011	2,298	7.0%	(0.8)	$894	$1.05	1.2%	-	$888	$1.04

4 & 5 STAR VACANCY & RENT

	Vacancy			Market Rent				Effective Rents	
Year	Units	Percent	Ppts Chg	Per Unit	Per SF	% Growth	Ppts Chg	Units	Per SF
2027	2,258	11.3%	(1.2)	$1,908	$2.01	1.5%	(0.2)	$1,886	$1.98
2026	2,355	12.6%	(2.2)	$1,880	$1.98	1.7%	0.1	$1,858	$1.96
2025	2,598	14.7%	(4.1)	$1,849	$1.94	1.6%	0.6	$1,827	$1.92
2024	3,212	18.8%	3.5	$1,820	$1.91	1.0%	(0.5)	$1,798	$1.89
2023	2,347	15.3%	4.8	$1,801	$1.90	1.5%	3.1	$1,781	$1.87
YTD	1,484	10.5%	0	$1,780	$1.86	-2.1%	(0.4)	$1,759	$1.84
2022	1,486	10.5%	1.6	$1,774	$1.86	-1.6%	(10.1)	$1,751	$1.83
2021	1,223	8.9%	0.8	$1,803	$1.89	8.5%	4.3	$1,794	$1.88
2020	978	8.1%	(4.3)	$1,662	$1.74	4.2%	2.7	$1,647	$1.73
2019	1,383	12.4%	2.1	$1,596	$1.67	1.5%	(4.6)	$1,565	$1.64
2018	994	10.3%	5.1	$1,572	$1.65	6.1%	0.2	$1,534	$1.61
2017	429	5.1%	(0.5)	$1,481	$1.55	6.0%	0	$1,444	$1.51
2016	386	5.6%	0.6	$1,398	$1.46	6.0%	0.5	$1,380	$1.45
2015	312	4.9%	0	$1,319	$1.38	5.5%	3.7	$1,295	$1.36
2014	309	4.9%	(1.6)	$1,251	$1.31	1.8%	(0.4)	$1,237	$1.30
2013	388	6.5%	(1.6)	$1,229	$1.29	2.2%	(0.3)	$1,213	$1.27
2012	486	8.1%	(1.0)	$1,202	$1.26	2.6%	1.7	$1,187	$1.24
2011	547	9.2%	(1.8)	$1,172	$1.23	0.8%	-	$1,164	$1.22

© 2023 CoStar Group - Licensed to Merchants Capital - 1108535

3 STAR VACANCY & RENT

	Vacancy			Market Rent				Effective Rents	
Year	Units	Percent	Ppts Chg	Per Unit	Per SF	% Growth	Ppts Chg	Units	Per SF
2027	1,276	7.1%	(0.4)	$1,632	$1.92	2.1%	(0.3)	$1,620	$1.90
2026	1,349	7.6%	(1.8)	$1,598	$1.88	2.4%	0.3	$1,587	$1.86
2025	1,677	9.4%	(3.2)	$1,562	$1.83	2.1%	0.7	$1,550	$1.82
2024	2,243	12.6%	0.8	$1,530	$1.80	1.3%	(0.8)	$1,518	$1.78
2023	2,013	11.8%	2.2	$1,510	$1.77	2.1%	1.5	$1,498	$1.76
YTD	1,565	9.6%	0	$1,489	$1.75	0.1%	(0.5)	$1,478	$1.74
2022	1,570	9.6%	5.7	$1,479	$1.74	0.6%	(8.8)	$1,462	$1.72
2021	595	3.9%	(0.6)	$1,469	$1.73	9.4%	2.1	$1,464	$1.72
2020	681	4.5%	(0.5)	$1,343	$1.58	7.3%	5.1	$1,330	$1.56
2019	741	5.0%	0.3	$1,252	$1.47	2.1%	(6.4)	$1,245	$1.46
2018	695	4.8%	0.4	$1,226	$1.44	8.6%	(0.3)	$1,206	$1.42
2017	637	4.4%	0.8	$1,129	$1.33	8.9%	0.8	$1,112	$1.31
2016	542	3.6%	(0.2)	$1,037	$1.22	8.1%	1.2	$1,022	$1.20
2015	579	3.8%	(0.2)	$959	$1.13	7.0%	1.5	$947	$1.11
2014	604	4.1%	(0.1)	$896	$1.05	5.4%	1.6	$884	$1.04
2013	609	4.2%	(1.3)	$850	$1	3.9%	1.8	$845	$0.99
2012	798	5.5%	(0.6)	$818	$0.96	2.1%	0.5	$809	$0.95
2011	888	6.1%	(0.9)	$802	$0.94	1.6%	-	$796	$0.93

1 & 2 STAR VACANCY & RENT

	Vacancy			Market Rent				Effective Rents	
Year	Units	Percent	Ppts Chg	Per Unit	Per SF	% Growth	Ppts Chg	Units	Per SF
2027	708	5.9%	0.1	$1,243	$1.78	2.2%	(0.3)	$1,236	$1.76
2026	695	5.8%	0	$1,217	$1.74	2.5%	0.1	$1,209	$1.73
2025	690	5.7%	0.1	$1,187	$1.69	2.4%	0.6	$1,179	$1.68
2024	684	5.7%	0	$1,159	$1.65	1.8%	1.5	$1,152	$1.64
2023	679	5.6%	0.6	$1,138	$1.63	0.3%	(2.7)	$1,131	$1.62
YTD	616	5.1%	0.1	$1,126	$1.60	1.7%	(1.3)	$1,119	$1.59
2022	607	5.0%	1.3	$1,134	$1.61	3.0%	(5.3)	$1,128	$1.60
2021	455	3.8%	0	$1,101	$1.56	8.3%	3.9	$1,096	$1.56
2020	454	3.8%	(0.7)	$1,017	$1.44	4.4%	0	$1,012	$1.44
2019	533	4.4%	0.7	$974	$1.38	4.4%	(4.5)	$969	$1.37
2018	450	3.7%	0.4	$933	$1.32	8.8%	(0.2)	$926	$1.31
2017	404	3.4%	(0.4)	$857	$1.21	9.0%	0.7	$847	$1.20
2016	453	3.8%	(0.2)	$786	$1.11	8.3%	1.4	$778	$1.10
2015	481	4.0%	(1.4)	$726	$1.03	6.9%	3.5	$716	$1.01
2014	651	5.4%	(0.4)	$679	$0.96	3.4%	(0.8)	$673	$0.95
2013	697	5.8%	(1.4)	$657	$0.93	4.2%	3.0	$653	$0.92
2012	869	7.2%	0.2	$630	$0.89	1.1%	(0.5)	$623	$0.88
2011	863	7.0%	(0.1)	$623	$0.88	1.6%	-	$619	$0.87

© 2023 CoStar Group - Licensed to Merchants Capital - 1108535

OVERALL SALES

	Completed Transactions (1)						Market Pricing Trends (2)		
Year	Deals	Volume	Turnover	Avg Price	Avg Price/Unit	Avg Cap Rate	Price/Unit	Price Index	Cap Rate
2027	-	-	-	-	-	-	$270,371	372	4.3%
2026	-	-	-	-	-	-	$265,121	365	4.3%
2025	-	-	-	-	-	-	$258,567	356	4.3%
2024	-	-	-	-	-	-	$252,911	348	4.3%
2023	-	-	-	-	-	-	$248,923	343	4.4%
YTD	4	$18M	0.2%	$4,504,465	$174,931	6.1%	$253,390	349	4.3%
2022	60	$798.8M	7.7%	$15,662,495	$285,894	5.0%	$251,740	347	4.3%
2021	76	$609.5M	9.1%	$9,674,687	$199,576	5.7%	$241,641	333	4.3%
2020	61	$342.5M	7.0%	$6,342,773	$127,327	5.6%	$210,002	289	4.5%
2019	53	$301.9M	4.6%	$6,709,769	$180,586	6.1%	$181,883	250	4.9%
2018	74	$272.8M	7.6%	$4,703,893	$122,015	5.8%	$164,038	226	5.2%
2017	59	$320.6M	8.1%	$6,049,075	$124,554	6.3%	$147,198	203	5.4%
2016	63	$280.8M	9.7%	$5,731,239	$94,683	6.3%	$133,228	183	5.6%
2015	53	$287M	9.1%	$5,857,466	$95,672	7.0%	$120,291	166	5.9%
2014	53	$174.4M	6.1%	$3,711,188	$88,406	7.6%	$108,860	150	6.1%
2013	28	$77M	3.3%	$3,078,060	$74,493	7.7%	$98,988	136	6.4%
2012	26	$110.4M	5.0%	$4,245,232	$67,632	7.9%	$96,725	133	6.4%

(1) Completed transaction data is based on actual arms-length sales transactions and levels are dependent on the mix of what happened to sell in the period.
(2) Market price trends data is based on the estimated price movement of all properties in the market, informed by actual transactions that have occurred.

4 & 5 STAR SALES

	Completed Transactions (1)						Market Pricing Trends (2)		
Year	Deals	Volume	Turnover	Avg Price	Avg Price/Unit	Avg Cap Rate	Price/Unit	Price Index	Cap Rate
2027	-	-	-	-	-	-	$356,981	366	4.1%
2026	-	-	-	-	-	-	$350,872	360	4.1%
2025	-	-	-	-	-	-	$343,114	352	4.1%
2024	-	-	-	-	-	-	$336,305	345	4.1%
2023	-	-	-	-	-	-	$331,537	340	4.1%
YTD	-	-	-	-	-	-	$337,584	346	4.1%
2022	5	$309.9M	9.0%	$77,475,000	$314,939	3.7%	$335,487	344	4.1%
2021	8	$196.5M	9.1%	$49,125,000	$300,459	4.9%	$323,870	332	4.1%
2020	5	$162.8M	10.1%	$32,562,400	$133,562	5.3%	$283,081	290	4.2%
2019	3	$161.4M	5.6%	$53,783,333	$257,337	4.9%	$244,341	250	4.6%
2018	4	$131.8M	8.6%	$32,955,000	$157,303	5.3%	$221,999	227	4.8%
2017	5	$112.9M	7.5%	$22,572,240	$180,289	5.8%	$199,548	204	5.0%
2016	2	$70.5M	7.3%	$35,250,000	$139,881	5.0%	$181,253	186	5.2%
2015	3	$109.6M	11.7%	$36,530,000	$148,095	5.2%	$163,404	167	5.5%
2014	2	$87.3M	9.6%	$43,650,000	$144,059	5.5%	$147,854	152	5.7%
2013	1	$24.5M	3.1%	$24,475,000	$133,016	-	$134,489	138	6.0%
2012	1	$35M	5.2%	$35,000,000	$113,636	6.0%	$130,743	134	6.0%

(1) Completed transaction data is based on actual arms-length sales transactions and levels are dependent on the mix of what happened to sell in the period.
(2) Market price trends data is based on the estimated price movement of all properties in the market, informed by actual transactions that have occurred.

© 2023 CoStar Group - Licensed to Merchants Capital - 1108535

Appendix

3 STAR SALES

	Completed Transactions (1)						Market Pricing Trends (2)		
Year	Deals	Volume	Turnover	Avg Price	Avg Price/Unit	Avg Cap Rate	Price/Unit	Price Index	Cap Rate
2027	-	-	-	-	-	-	$252,576	366	4.3%
2026	-	-	-	-	-	-	$247,183	358	4.3%
2025	-	-	-	-	-	-	$240,573	349	4.3%
2024	-	-	-	-	-	-	$235,030	341	4.3%
2023	-	-	-	-	-	-	$231,236	335	4.3%
YTD	-	-	-	-	-	-	$235,161	341	4.2%
2022	13	$360.8M	7.1%	$36,080,500	$325,636	4.7%	$233,711	339	4.2%
2021	25	$287.7M	10.0%	$14,386,433	$194,806	5.6%	$224,756	326	4.2%
2020	11	$113.3M	6.4%	$11,331,264	$120,674	5.2%	$195,848	284	4.4%
2019	11	$95.9M	4.1%	$8,716,949	$159,280	5.5%	$169,733	246	4.8%
2018	17	$18M	2.6%	$1,496,254	$95,000	6.3%	$152,657	221	5.1%
2017	15	$153.9M	9.1%	$10,995,130	$126,485	5.3%	$137,285	199	5.3%
2016	16	$131.5M	10.1%	$13,149,962	$99,924	6.0%	$124,147	180	5.5%
2015	16	$130.6M	10.7%	$8,705,424	$81,562	6.2%	$113,073	164	5.8%
2014	5	$52.2M	4.6%	$10,433,000	$76,153	6.4%	$102,185	148	6.0%
2013	8	$28M	2.4%	$3,993,786	$82,957	7.6%	$92,513	134	6.3%
2012	9	$62.4M	7.1%	$6,933,278	$60,818	8.3%	$90,974	132	6.3%

(1) Completed transaction data is based on actual arms-length sales transactions and levels are dependent on the mix of what happened to sell in the period.
(2) Market price trends data is based on the estimated price movement of all properties in the market, informed by actual transactions that have occurred.

1 & 2 STAR SALES

	Completed Transactions (1)						Market Pricing Trends (2)		
Year	Deals	Volume	Turnover	Avg Price	Avg Price/Unit	Avg Cap Rate	Price/Unit	Price Index	Cap Rate
2027	-	-	-	-	-	-	$173,344	408	4.7%
2026	-	-	-	-	-	-	$169,529	399	4.7%
2025	-	-	-	-	-	-	$164,775	388	4.7%
2024	-	-	-	-	-	-	$160,594	378	4.8%
2023	-	-	-	-	-	-	$157,430	370	4.8%
YTD	4	$18M	0.9%	$4,504,465	$174,931	6.1%	$160,448	377	4.7%
2022	42	$128.1M	7.0%	$3,461,682	$182,453	5.3%	$159,141	374	4.7%
2021	43	$125.3M	8.1%	$3,212,221	$135,728	5.8%	$149,504	352	4.8%
2020	45	$66.4M	4.9%	$1,702,182	$124,784	5.7%	$126,855	298	5.0%
2019	39	$44.7M	4.3%	$1,442,037	$100,910	6.6%	$110,900	261	5.4%
2018	53	$123.1M	12.7%	$2,929,780	$101,779	5.7%	$98,321	231	5.8%
2017	39	$53.8M	7.4%	$1,582,587	$73,609	6.8%	$87,299	205	6.1%
2016	45	$78.8M	10.6%	$2,130,571	$68,788	6.5%	$78,260	184	6.3%
2015	34	$46.8M	5.7%	$1,511,112	$71,084	7.5%	$69,555	164	6.7%
2014	46	$35M	6.2%	$874,021	$51,262	8.0%	$63,191	149	6.9%
2013	19	$24.5M	4.4%	$1,442,353	$47,891	7.8%	$57,999	136	7.2%
2012	16	$13M	2.5%	$811,034	$43,545	7.7%	$56,776	134	7.2%

(1) Completed transaction data is based on actual arms-length sales transactions and levels are dependent on the mix of what happened to sell in the period.
(2) Market price trends data is based on the estimated price movement of all properties in the market, informed by actual transactions that have occurred.

© 2023 CoStar Group - Licensed to Merchants Capital - 1108535

DELIVERIES & UNDER CONSTRUCTION

	Inventory			Deliveries		Net Deliveries		Under Construction	
Year	Bldgs	Units	Vacancy	Bldgs	Units	Bldgs	Units	Bldgs	Units
2027	-	49,806	8.5%	-	1,213	-	1,196	-	-
2026	-	48,610	9.1%	-	1,098	-	1,079	-	-
2025	-	47,531	10.4%	-	602	-	589	-	-
2024	-	46,942	13.1%	-	2,523	-	2,510	-	-
2023	-	44,432	11.3%	-	1,885	-	1,881	-	-
YTD	712	42,565	8.6%	1	14	1	14	18	4,497
2022	711	42,551	8.6%	11	1,627	11	1,627	18	4,475
2021	700	40,924	5.6%	10	1,716	9	1,696	18	3,045
2020	691	39,228	5.4%	10	1,262	10	1,262	18	2,984
2019	681	37,966	7.0%	7	1,625	7	1,625	19	2,326
2018	674	36,341	5.9%	9	1,383	9	1,383	13	2,484
2017	665	34,958	4.2%	5	1,448	4	864	15	2,662
2016	661	34,094	4.1%	4	649	4	649	8	1,943
2015	657	33,445	4.1%	2	274	1	269	3	413
2014	656	33,176	4.7%	2	626	2	626	2	274
2013	654	32,550	5.2%	0	0	0	0	3	860
2012	654	32,550	6.6%	2	59	1	(179)	0	0
2011	653	32,729	7.0%	0	0	0	0	2	59

© 2023 CoStar Group - Licensed to Merchants Capital - 1108535

EXHIBIT 2A

SOURCES & USES OF PROCEEDS TABLE

Sources & Uses of Proceeds Table
Carville Park Apts
Base Case

	EUL	Facility A: TE Bonds — AFL-CIO HIT	Facility B: Taxable — AFL-CIO HIT	HUD 221(d)(4) — AFL-CIO HIT	Deferred Developer Fee (DDF)	NV Infrastructure Bank LT Note	Investor Member	Managing Member	State Investor Member	Special Member	Cash flow from Operations	Allocated Total	Forecast Total	Unallocated Balance
Sources Available:		30,000,000	12,693,330	23,875,000	250,000	7,000,000	20,154,315	100	2,760,000	100	1,431,994	55,471,509	(55,471,509)	
Land Acquisition	**n/a**	-		-			-	-	-	-	-	-	-	-
Building Acquisition	**30 Yrs**	-		8,239,800			-	100	2,760,000	100	-	11,000,000	11,000,000	-
Transaction & Other Closing	**28 Yrs**	-		-							-	-	-	-
Building Construction / Renovation	**30 Yrs**	-		15,173,850		7,000,000	-	-			-	22,173,850	22,173,850	-
Construction Contingency	**30 Yrs**	-		-			2,224,466	-			-	2,224,466	2,224,466	-
Machinery/Equipment/Furnishings	**5 Yrs**	-		-			90,000	-			-	90,000	90,000	-
Engineering/Architectural/Design/Permits/Env.	**30 Yrs**	-		-			766,983	-			-	766,983	766,983	-
SIB Origination Fee	**20 Yrs**	-		-				-			70,000	70,000	70,000	-
Other Soft & Financing Costs	**20 Yrs**	-		461,350			8,390,184	-			1,361,994	10,213,528	10,213,528	-
Developer Fee	**30 Yrs**	-		-	250,000		6,730,824	-			-	6,980,824	6,980,824	-
Reserves & NWC	**n/a**	-		-			1,951,858	-	-	-	-	1,951,858	1,951,858	-
Construction Debt Repayment	**n/a**	30,000,000	12,693,330	-			-	-	-	-		-		
Sources Allocated:		**30,000,000**	**12,693,330**	**23,875,000**	**250,000**	**7,000,000**	**20,154,315**	**100**	**2,760,000**	**100**	**1,431,994**	**55,471,509**	**55,471,509**	
Unallocated / (Over Allocated) Sources		-	-	-	-	-	-	-	-	-	0	-	(0)	

Basis used in estimating the useful life of the project:

All useful life estimates are based on the federal tax treatment of the specific asset and it's associated depriciable and/or amortizable useful life.

EXHIBIT 2B

DEVELOPMENT COST DETAIL

Development & Construction Costs
Carville Park Apts
Base Case

Description	Tax Treatment	New-Rehab EB	Acquisition EB	Historic QRE	Energy EB	Ineligible	Total Cost (TDC)	TDC PU	TDC PNRSF	% TDC
Acquisition Costs										
Land Cost: $0.0 PLSF	None	-	-	-	-	-	-	-		-
Personal Property: $1,000 PU	Depreciated - PP	-	209,000	-	-	-	209,000	1,000	2.7	0.4%
Building: $51,632 PU	Depreciated - RP	-	10,791,000	-	-	-	10,791,000	51,632	137.4	19.5%
Interest: Pursuit Cost Loans	Depreciated - RP	-	19,190	-	-	-	19,190	92	0.2	0.0%
Transaction Legal	Depreciated - RP	-	50,000	-	-	-	50,000	239	0.6	0.1%
Title	Depreciated - RP	-	11,000	-	-	-	11,000	53	0.1	0.0%
Acquisition Costs		**-**	**11,080,190**	**-**	**-**	**-**	**11,080,190**	**53,015**	**141.1**	**20.0%**
Construction Costs										
GC Base Contract	See Detail	18,399,679	-	-	1,969,262	-	18,399,679	88,037	234.4	33.2%
GC Contingency: 5.0%	Depreciated - RP	919,984	-	-	98,463	-	919,984	4,402	11.7	1.7%
GC General Requirements: 6.0%	Depreciated - RP	1,159,180	-	-	124,064	-	1,159,180	5,546	14.8	2.1%
GC Overhead: 2.0%	Depreciated - RP	386,393	-	-	41,355	-	386,393	1,849	4.9	0.7%
GC Profit: 6.0%	Depreciated - RP	1,159,180	-	-	124,064	-	1,159,180	5,546	14.8	2.1%
Payment & Performance Bonds: 1.0%	Depreciated - RP	220,244	-	-	23,572	-	220,244	1,054	2.8	0.4%
Base Case Contingency: 10.0%	Depreciated - RP	2,224,466	-	-	238,078	-	2,224,466	10,643	28.3	4.0%
Construction Costs		**24,469,126**	**-**	**-**	**2,618,857**	**-**	**24,469,126**	**117,077**	**311.7**	**44.1%**
Soft Costs										
Architect Fee - Design	Depreciated - RP	242,880	-	-	-	-	242,880	1,162	3.1	0.4%
Architect Fee - Supervision	Depreciated - RP	99,200	-	-	-	-	99,200	475	1.3	0.2%
Engineering	Depreciated - RP	200,000	-	-	-	-	200,000	957	2.5	0.4%
Survey	Depreciated - RP	25,000	-	-	-	-	25,000	120	0.3	0.0%
Environmental	Depreciated - RP	25,000	-	-	-	-	25,000	120	0.3	0.0%
Housing Consultant	Depreciated - RP	60,000	-	-	-	-	60,000	287	0.8	0.1%
Appraisal	Depreciated - RP	12,500	-	-	-	-	12,500	60	0.2	0.0%
Market Study/RCS	Depreciated - RP	25,000	-	-	-	-	25,000	120	0.3	0.0%
Permits Fees	Depreciated - RP	87,403	-	-	-	-	87,403	418	1.1	0.2%
Zoning Fees	Depreciated - RP	27,500	-	-	-	-	27,500	132	0.4	0.0%
Legal (Construction)	Depreciated - RP	50,000	-	-	-	-	50,000	239	0.6	0.1%
Accounting Fees	Depreciated - RP	35,000	-	-	-	-	35,000	167	0.4	0.1%
Legal, Accounting & Other Synd	None	25,000	-	-	-	-	25,000	120	0.3	0.0%
Inspections	Depreciated - RP	4,800	-	-	-	-	4,800	23	0.1	0.0%
Tax Credit Fees (Application, Reservation, Energy Audit)	None	-	-	-	-	232,312	232,312	1,112	3.0	0.4%
Cost Certification	Depreciated - RP	20,000	-	-	-	-	20,000	96	0.3	0.0%
Capital Needs Assessment	Depreciated - RP	7,500	-	-	-	-	7,500	36	0.1	0.0%
Relocation	Depreciated - RP	-	-	-	-	1,600,000	1,600,000	7,656	20.4	2.9%
Lease-up/Start-up Costs	Expensed	-	-	-	-	50,000	50,000	239	0.6	0.1%
Marketing/Branding	Expensed	-	-	-	-	50,000	50,000	239	0.6	0.1%
Organizational Cost	None	50,000	-	-	-	-	50,000	239	0.6	0.1%
Borrower/Buyer Counsel	Amortized	50,000	-	-	-	-	50,000	239	0.6	0.1%
Capitalized Carrying Charges	Depreciated - RP	614,022	-	-	-	-	614,022	2,938	7.8	1.1%
Soft Cost Contingency: 10.0%	Depreciated - RP	359,312	-	-	-	-	359,312	1,719	4.6	0.6%
Soft Costs		**2,020,117**	**-**	**-**	**-**	**1,932,312**	**3,952,430**	**18,911**	**50.3**	**7.1%**

Development & Construction Costs
Carville Park Apts
Base Case

Description	Tax Treatment	New-Rehab EB	Acquisition EB	Historic QRE	Energy EB	Ineligible	Total Cost (TDC)	TDC PU	TDC PNRSF	% TDC
Financing Costs										
Constr: Origination Fee (175 bps of Loan)	Depreciated - RP	770,000	-	-	-	-	770,000	3,684	9.8	1.4%
Constr: Other Costs & Fees	Depreciated - RP	100,000	-	-	-	-	100,000	478	1.3	0.2%
Constr: Loan Interest: $5,032,413 calc.	Depreciated - RP	4,891,013	-	-	-	141,400	5,032,413	24,079	64.1	9.1%
Constr: Upfront MIP (2-years Capitalized)	Depreciated - RP	119,375	-	-	-	-	119,375	571	1.5	0.2%
NV State IB: Origination Fees (100 bps of Loan)	Amortized	-	-	-	-	70,000	70,000	335	0.9	0.1%
TE Bond: Issuance Costs (2% of Issuance)	Amortized	-	-	-	-	600,000	600,000	2,871	7.6	1.1%
TE Bond: Trustee Fees & Other Costs	Amortized	-	-	-	-	50,000	50,000	239	0.6	0.1%
221(d)(4): Application Fee (3 bps of Loan)	Amortized	-	-	-	-	71,625	71,625	343	0.9	0.1%
221(d)(4): Inspection Fee (5 bps of Renovation Cost)	Amortized	-	-	-	-	123,669	123,669	592	1.6	0.2%
TC Equity: Syndicator Legal & Due Diligence	None	-	-	-	-	100,000	100,000	478	1.3	0.2%
Financing Costs		**5,880,388**	**-**	**-**	**-**	**1,156,694**	**7,037,082**	**33,670**	**89.6**	**12.7%**
Working Capital Requirements										
Perm: Operating Cash	None	-	-	-	-	356,220	558,329	2,671	7.1	1.0%
Perm: Operating Reserve: $581,749 calc.	None	-	-	-	-	550,399	550,399	2,633	7.0	1.0%
Perm: Debt Service Reserve: $843,131 calc.	None	-	-	-	-	843,131	843,131	4,034	10.7	1.5%
Working Capital Requirements		**-**	**-**	**-**	**-**	**2,833,469**	**1,951,858**	**9,339**	**24.9**	**3.5%**
Developer Fee										
Base Developer Fee:	Depreciated - RP	4,855,445	1,662,029	-	392,828	463,351	6,980,824	33,401	88.9	12.6%
Developer Fee		**4,855,445**	**1,662,029**	**-**	**392,828**	**463,351**	**6,980,824**	**33,401**	**88.9**	**12.6%**
Total		**37,225,076**	**12,742,219**	**-**	**3,011,685**	**6,385,826**	**55,471,509**	**265,414**	**706.6**	**100.0%**

EXHIBIT 2C

BIG SUN SOLAR PROPOSAL



A Solar Energy Proposal prepared for:

The Canopy Co

Carville Park - Preliminary Estimate

Presented by:
Andrew Wood

Date:

5/19/2023

This proposal is valid for 30 days.

Table of Contents

Why We're Here ---- 3

Our Product ---- 4

System Performance and Health ---- 5

Operation & Maintenance ---- 6

Preliminary Layout ---- 7

Program Summary ---- 8

PV System Details ---- 9

- Meter #1 ---- 9

Electric Bills ---- 10

25-Year Cash Flow Analysis ---- 11

- Cash Purchase ---- 11

Rebates and Incentives ---- 12

Project Timeline ---- 13

Your Team ---- 14

What our customers say... ---- 15

Our customers are leaders in Texas ---- 16

Why We're Here

Building a renewable future for the next generation of Texans



With backgrounds in both solar energy and technology, we recognized a fundamental problem in the industry. We wanted to build innovative business models and a much more approachable customer experience for businesses that wanted to invest in solar energy.

We founded Big Sun Solar in 2015 to drive the mass adoption of solar by making it affordable, accessible and understandable to all. We're building a team that shares our passion for building a renewable future and has deep experience in solar energy, technology and engineering. With roots in Texas, we're proud to fulfill our mission in San Antonio.

Thank you for considering Big Sun Solar for your solar energy project.

Robert Miggins,
Co-Founder & CEO

Jason Pittman
Co-Founder & President

Our Product



Big Sun Solar has an exclusive partnership with Mission Solar Energy, a local solar panel manufacturer.

25 YEAR WARRANTY

- 25 yr production warranty
- 25 yr frame to frame warranty
- Tested to UL 61730 & IEC Standards

AMERICAN MADE

- Manufactured in San Antonio, TX
- Buy America Act
- American Recovery & Reinvestment Act

EXTREME WEATHER RESISTANCE

- Tested to withstand golf ball size hail
- 40mm frame (standard is 35mm)
- 3.2mm glass thickness (standard is 2mm)

ADVANCED TECHNOLOGY

- 9 Busbar
- Passivated Emitter Rear Contact
- Ideal for all applications

System Performance and Health

The health of your solar PV system is vital to the long-term financial performance of the project. To provide a better user experience, Big Sun Solar has built a solar monitoring and communication platform, Core99, for our customers.

The Canopy Co - , San Antonio, TX

$7,514 earned this month

*Based on a blended CPSE rate calculated by dividing total bill by net metered consumption

Your Big Sun Solar system performed as expected

*Based on a comparison between a long-term weather average based estimate of expected production and actual production measued by your inverters

68,270 kWh produced



Expected production: **56,008** kWh - **68,454** kWh

REALTIME PRODUCTION DATA

Our software collects production data from the solar array every 15 minutes and estimates expected production.

AUTOMATED REPORTING

With the collected data, we will put together a monthly or quarterly report that illustrates the performance of your solar array.

CUSTOMER COMMUNICATION

Receive reports directly to your inbox so you can share with your executive team. Receive monthly text messages with the dollars you are saving each month.

Operation & Maintenance



Big Sun Solar is the ***only*** commercial solar provider to proactively check the health of your solar array.

Our operation and maintenance team is local and proactively does the following:

- ✓ Annual inspections
- ✓ Cleaning (as needed)
- ✓ Realtime monitoring
- ✓ Scheduled maintenance
- ✓ Unscheduled maintenance
- ✓ Extreme weather event inspections
- ✓ Thermal scans
- ✓ Warranty claims

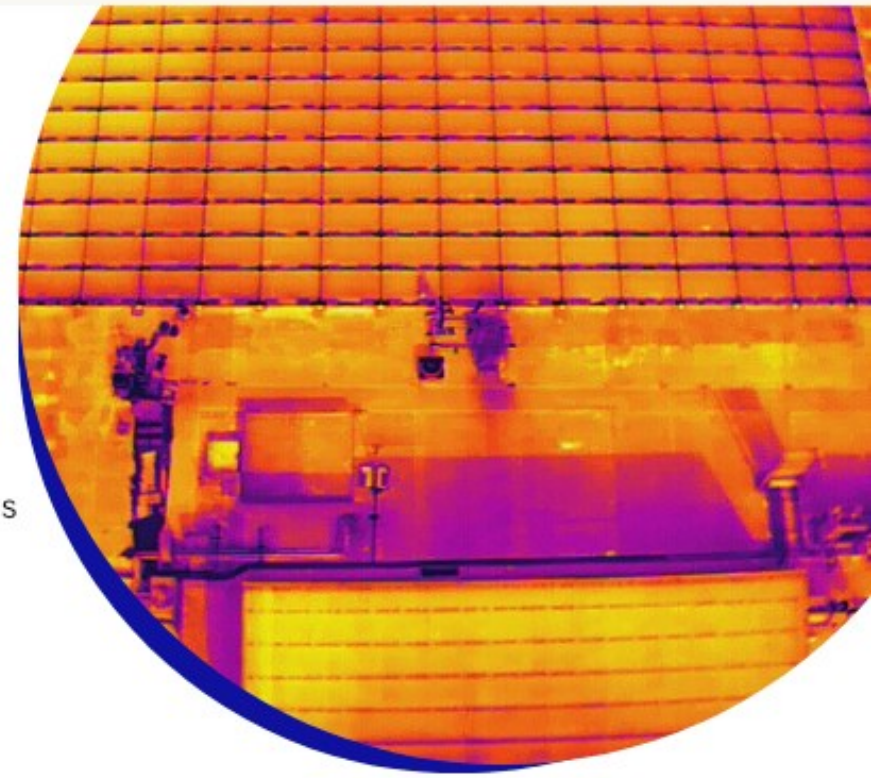

Preliminary Layout

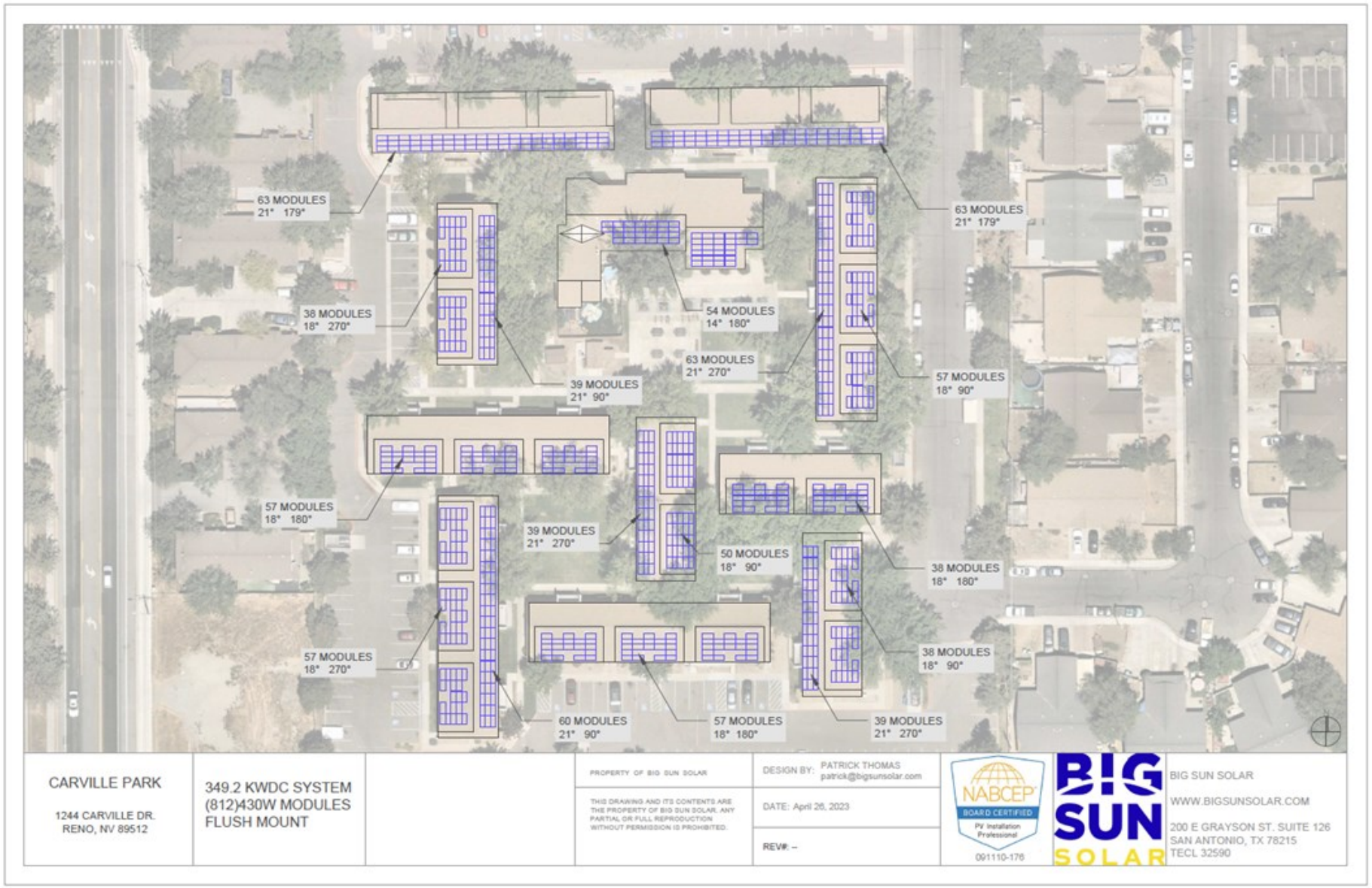

Program Summary

Payment Options	Cash Purchase
IRR - Term	8.0%
LCOE PV Generation	$0.056 /kWh
Net Present Value	$343,878
Payback Period	10.2 Years
Total Payments	$1,969,262
Total Incentives	$1,244,574
Net Payments	$724,689
Electric Bill Savings - Term	$2,193,930
Upfront Payment	$1,969,262

Cumulative Energy Costs By Payment Option

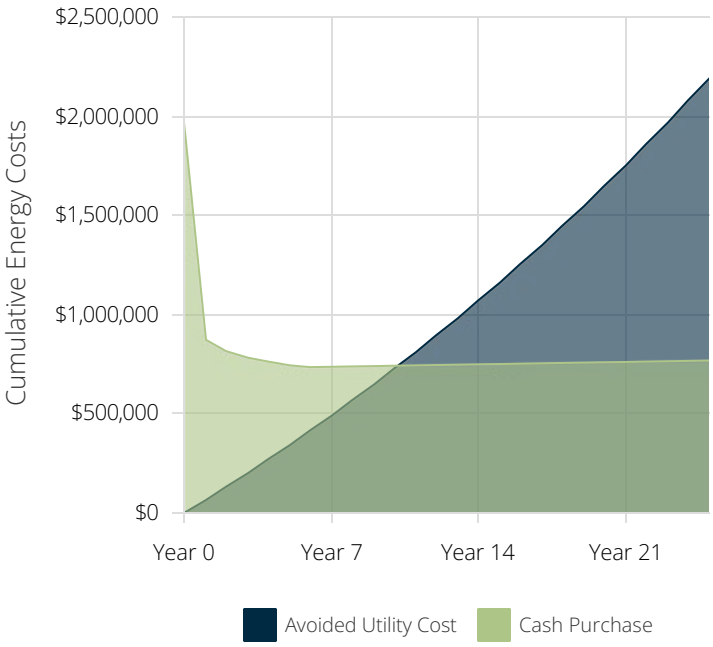

Cap Rate Table based on Annual Savings

Cap Rate (%)	Value ($)
5.0%	$1,305,927
6.0%	$1,088,272
7.0%	$932,805
8.0%	$816,204

PV System Details

Meter #1

General Information
Facility: Meter #1
Address: San Antonio TX

Solar PV Equipment Description
Solar Panels: (812) Mission Solar MSE430SX9Z
Inverters: (8) SMA Sunny Tripower_Core1 33-US-41

Solar PV Equipment Typical Lifespan
Solar Panels: Greater than 30 Years
Inverters: 25 Years

Solar PV System Cost and Incentives

Solar PV System Cost	$1,969,262
Federal ITC	-$787,705
Federal - MACRS Bonus Depreciation	-$456,869
Net Solar PV System Cost	**$724,689**

Solar PV System Rating
Power Rating: 349.2 kW-DC
Power Rating: 266.4 kW-AC

Energy Consumption Mix
Annual Energy Use: 668,678 kWh
Annual Solar Production: 557,231 kWh

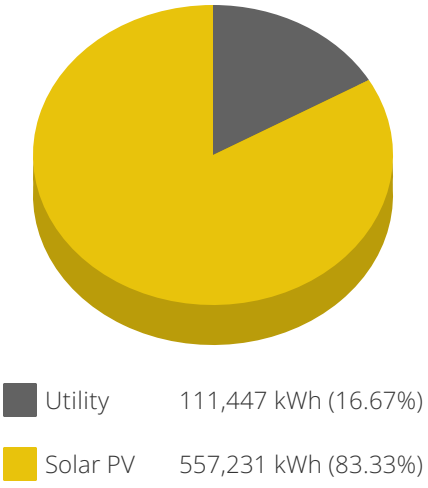

Monthly Energy Use vs Solar Generation

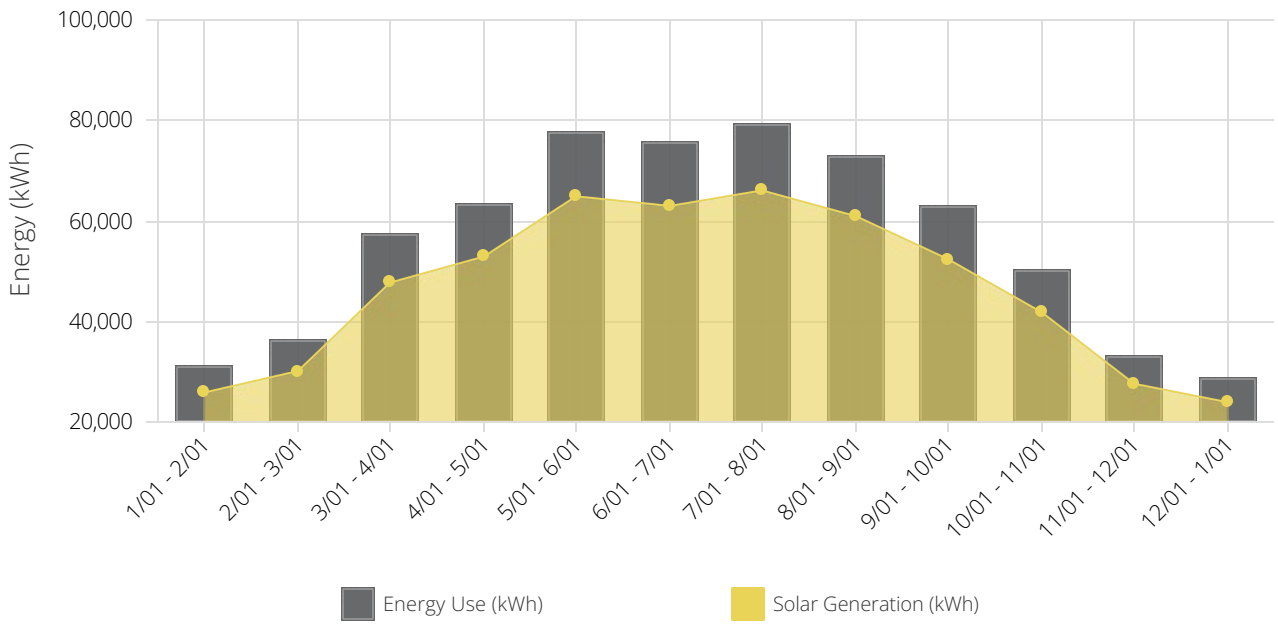

Electric Bills

Current Electric Bill - Meter #1

Time Periods	Energy Use (kWh)	Charges		
Bill Ranges & Seasons	Total	Other	Energy	Total
1/1/2023 - 2/1/2023 A	31,005	$26	$3,633	$3,659
2/1/2023 - 3/1/2023 A	36,166	$26	$4,238	$4,263
3/1/2023 - 4/1/2023 A	57,264	$26	$6,710	$6,736
4/1/2023 - 5/1/2023 A	63,506	$26	$7,442	$7,467
5/1/2022 - 6/1/2022 A	77,882	$26	$9,126	$9,152
6/1/2022 - 7/1/2022 A	75,589	$26	$8,858	$8,883
7/1/2022 - 8/1/2022 A	79,292	$26	$9,291	$9,317
8/1/2022 - 9/1/2022 A	73,130	$26	$8,569	$8,595
9/1/2022 - 10/1/2022 A	62,875	$26	$7,368	$7,393
10/1/2022 - 11/1/2022 A	50,144	$26	$5,876	$5,901
11/1/2022 - 12/1/2022 A	33,132	$26	$3,882	$3,908
12/1/2022 - 1/1/2023 A	28,693	$26	$3,362	$3,388
Total	668,678	$306	$78,356	$78,662

New Electric Bill - Meter #1

Time Periods	Energy Use (kWh)	Solar PV (kWh)	Charges		
Bill Ranges & Seasons	Total	Total	Other	Energy	Total
1/1/2023 - 2/1/2023 A	31,005	25,838	$26	$605	$631
2/1/2023 - 3/1/2023 A	36,166	30,138	$26	$706	$732
3/1/2023 - 4/1/2023 A	57,264	47,720	$26	$1,118	$1,144
4/1/2023 - 5/1/2023 A	63,506	52,921	$26	$1,240	$1,266
5/1/2022 - 6/1/2022 A	77,882	64,902	$26	$1,521	$1,547
6/1/2022 - 7/1/2022 A	75,589	62,991	$26	$1,476	$1,502
7/1/2022 - 8/1/2022 A	79,292	66,076	$26	$1,549	$1,574
8/1/2022 - 9/1/2022 A	73,130	60,942	$26	$1,428	$1,454
9/1/2022 - 10/1/2022 A	62,875	52,396	$26	$1,228	$1,253
10/1/2022 - 11/1/2022 A	50,144	41,786	$26	$979	$1,005
11/1/2022 - 12/1/2022 A	33,132	27,610	$26	$647	$673
12/1/2022 - 1/1/2023 A	28,693	23,911	$26	$560	$586
Total	668,678	557,231	$306	$13,059	$13,365

Annual Savings: $65,296

25-Year Cash Flow Analysis

Cash Purchase

Assumptions and Key Financial Metrics

IRR - Term	8.0%	Net Present Value	$343,878	Payback Period	10.2 Years
ROI	72.4%	PV Degradation Rate	0.58%	Discount Rate	5.0%
Energy Cost Escalation Rate	3.0%	Federal Income Tax Rate	29.0%	State Income Tax Rate	0.0%
Total Project Costs	$1,969,262				

Years	Cash			PV Generation (kWh)	Federal Taxes		Total Cash Flow	Cumulative Cash Flow
	Project Costs	O&M / Equipment Replacement	Electric Bill Savings		Income Decrease (Federal - MACRS Bonus Depreciation)	Federal ITC		
Upfront	-$1,969,262	-	-	-	-	-	-$1,969,262	-$1,969,262
1	-	-$1,746	$65,296	557,232	$310,671	$787,705	$1,161,926	-$807,336
2	-	-$1,746	$66,865	554,000	$58,479	-	$123,599	-$683,738
3	-	-$1,746	$68,469	550,768	$35,088	-	$101,811	-$581,926
4	-	-$1,746	$70,110	547,536	$21,053	-	$89,416	-$492,510
5	-	-$1,746	$71,787	544,304	$21,053	-	$91,093	-$401,417
6	-	-$1,746	$73,501	541,072	$10,526	-	$82,282	-$319,135
7	-	-$1,746	$75,254	537,840	-	-	$73,508	-$245,627
8	-	-$1,746	$77,046	534,608	-	-	$75,300	-$170,327
9	-	-$1,746	$78,877	531,376	-	-	$77,132	-$93,195
10	-	-$1,746	$80,750	528,144	-	-	$79,004	-$14,192
11	-	-$1,746	$82,663	524,912	-	-	$80,917	$66,726
12	-	-$1,746	$84,619	521,680	-	-	$82,873	$149,599
13	-	-$1,746	$86,617	518,448	-	-	$84,872	$234,470
14	-	-$1,746	$88,660	515,216	-	-	$86,914	$321,384
15	-	-$1,746	$90,747	511,984	-	-	$89,001	$410,385
16	-	-$1,746	$92,879	508,753	-	-	$91,133	$501,518
17	-	-$1,746	$95,058	505,521	-	-	$93,312	$594,830
18	-	-$1,746	$97,283	502,289	-	-	$95,538	$690,368
19	-	-$1,746	$99,557	499,057	-	-	$97,811	$788,180
20	-	-$1,746	$101,880	495,825	-	-	$100,134	$888,314
21	-	-$1,746	$104,252	492,593	-	-	$102,506	$990,820
22	-	-$1,746	$106,675	489,361	-	-	$104,930	$1,095,750
23	-	-$1,746	$109,150	486,129	-	-	$107,404	$1,203,154
24	-	-$1,746	$111,677	482,897	-	-	$109,931	$1,313,085
25	-	-$1,746	$114,257	479,665	-	-	$112,512	$1,425,597
Totals:	-$1,969,262	-$43,645	$2,193,930	12,961,209	$456,869	$787,705	$1,425,597	-

Rebates and Incentives

This section summarizes all incentives available for this project. The actual rebate and incentive amounts for this project are shown in each example.

Facility - Meter #1

Investment Tax Credit (ITC), Commercial - 30% (with Adders) BIGSUN

The Inflation Reduction Act (IRA) of 2022 establishes and extends the federal Investment Tax Credit (ITC) for solar photovoltaic (PV) systems at a rate of 30% of the total PV system cost. The 30% ITC was extended for 10 years, through 2032. Unlike tax deductions, this tax credit can be used to directly offset your tax liability dollar for dollar. The IRA extended the carryback period to 3 years, and the carryforward period to 22 years, in cases where the tax credit exceeds a customer's tax liability in the 'placed-in-service' year.

Total Incentive Value: $787,705

Federal MACRS, Bonus Depreciation - 60% (2024 Place in Service)

Under the federal Modified Cost Recovery System (MACRS), businesses may recover investments in solar PV property through depreciation deductions over a 5-year established lifespan. For PV systems, the taxable basis of the equipment must be reduced by 50% of any federal tax credits associated with the system. The Tax Cuts and Jobs Act of 2017 included provisions that modified bonus depreciation under Code Section 168(k). PV projects that were placed in service after September 27, 2017 and before January 1, 2023 were eligible for 100% bonus depreciation, allowing eligible entities to deduct the entire allowable tax basis of the system in the first year of operation. Projects placed in service in 2024 qualify for 60% bonus depreciation, which means in the first year of service, companies can elect to depreciate 60% of the basis while the remaining 40% is depreciated under the normal MACRS schedule.

Total Incentive Value: $456,869

Project Timeline

PROPOSAL REVIEW

SIGN CONTRACT

Within 30 days to lock in price.

DESIGN & PERMITTING

Within 30 days of signed contract.

CONSTRUCTION BEGINS

Dependent on construction schedule and system type.

COMMISSIONING

Generally within 90 days from when construction was started.



Your Team



Andrew Wood
VP Sales Operations



Charlie Kirk
Construction Manager



Kaitlynn Vail
Customer Care



We don't walk away after your solar project has been turned on. Our team continues to provide exceptional customer service for the lifetime of your solar PV system.

What our customers say...

"The solar panels have exceeded the projected performance. That efficiency has been amazing and the reductions in our expenses are obvious. The payoff of that initial expense is going to be faster than predicted on the original estimates. In addition to what the solar carports provide from an environmental standpoint, from a financial standpoint it's a no brainer."



Grady Alsabrook, M.D.
Vascular Surgeon, Peripheral Vascular Associates

Click here to read more.

"Big Sun Solar came highly recommended to us from a bank we do business with and we now have Big Sun solar panels on many of our hotels throughout San Antonio and plan on rolling it out to other hotels throughout the country. We would definitely recommend Big Sun to anyone in the hotel industry but also to anyone who wants solar."



BJ Patel
SVP of Development & Finance - Baywood Hotels

Click here to read more.

"We get the real benefit on our insurance premium for our inventory so that was the biggest financial driver on top of tax credits plus accelerated depreciation. I would tell my fellow dealers to contact Big Sun Solar to look at the opportunity and have them crunch the numbers."



Bobby Cavender
President, Cavender Auto Group

Click here to read more.

Our customers are leaders in Texas



Thank you for contacting us for your solar energy needs. We look forward to working with you.

Email: andrew@bigsunsolar.com
Mobile: (210) 303-0038
Office: (210) 960-2303

Big Sun Solar
200 E. Grayson Street, STE 126
San Antonio Texas 78215

TECL #32590
Regulated by The Texas Department of Licensing and Regulation, P. O. Box 12157, Austin, Texas 78711, 1-800-803-9202, 512-463-6599; website: www.tdlr.texas.gov

EXHIBIT 3A

TAX CREDIT EQUITY TERM SHEET

MERCHANTS CAPITAL

January 13, 2023

VIA E-MAIL/PDF

The Canopy Companies
Attn: Victor Atkins & Pat Biernacki

Northern Nevada Building &
Construction Trades Development
Corp.
Attn: Rob Benner

RE: Carville Park Apartments, Reno, NV (the "**Project**")

Ladies and Gentlemen:

Merchants Capital Investments, LLC, a subsidiary of Merchants Bank of Indiana, an Indiana banking company ("Merchants") or its assignees is pleased to make the following non-binding proposal for equity financing related to an affordable housing development as further described below. The parties will use this proposal to negotiate an amended and restated limited partnership agreement or limited liability company agreement, as applicable ("Equity Agreement"). The terms outlined and summarized in this letter are contingent upon and subject to Merchants' Investment Committee approval. Merchants reserves the right to update and adjust this Letter of Interest to reflect any changes in the following information and assumptions discovered during the due diligence and underwriting review.

A. PROJECT: The Project, located in Reno, NV will have 209 units available to families for rent. Within the project, 208 units will be occupied in compliance with Federal low-income housing tax credit ("LIHTC") requirements of Section 42 of the Internal Revenue Code of 1986 (the "Code").

B. TAX CREDIT AMOUNT:

Federal LIHTC:

Available Federal LIHTC to Project:	$20,470,259
Credit Price:	$0.80
Total Federal LIHTC Equity:	$16,372,932

Federal Energy ITC:

Available Federal ITC to Project:	$2,329,404
Credit Price:	$0.92
Total Federal HTC Equity:	$5,328,938
Federal Energy 45L Credit:	
Available Federal 45L Credits to Project:	$522,500
Credit Price:	$0.85
Total Federal HTC Equity:	$444,036
State LIHTC (Certificated):	
Available State LIHTC to Project:	$3,000,000
Credit Price:	$0.90
Total State LIHTC Equity:	$2,700,000

C. MATERIAL PARTICIPANTS:

- **a. Project Owner:** To-be-formed SPE
- **b. Non-Profit Sponsor Parent: Northern Nevada Building & Construction Trades Development Corp., or an affiliate.**
- **c. Developer:** The Canopy Companies, or affiliate
- d. **Sponsor Entity (General Partner/Managing Member):** Entity TBD (0.001% in the Project Owner)
- **e. Developer Entity (Special Limited Partner/Special Member): Entity TBD (0.009% in the Project Owner).**
- **f. Investor:** One or more affiliates of Merchants (99.99% in the Project Owner)
- **g. Property Manager:** TBD
- **h. General Contractor: Entity** TBD
- **i. Guarantor:** TBD. Minimum liquidity of $4,000,000 and net worth of at least $16,000,000 throughout the Compliance Period.
- **j. Sponsor Parties:** Collectively, Sponsor Parent, Developer, Sponsor Entity, Guarantor and any affiliates.

D. KEY DATES:

- a. **Closing Date**: 10/1/2023
- b. **Completion Date**: 6/1/2025
- c. **Qualified Occupancy Date**: 9/1/2025
- d. **8609 Date**: 3/1/2026

MERCHANTS CAPITAL

E. CAPITAL CONTRIBUTIONS: The Investor proposes to make Capital Contributions to the Project Owner on the following schedule, upon the achievement of prescribed benchmarks and satisfactory evidence or approval of certain conditions, to be more fully described in the Equity Agreement. The terms of the State LIHTC investment shall be subject to structuring review and set forth in a to-be negotiated State LIHTC purchase agreement. The Investor's Capital Contribution will be subject to reduction and adjustment, including for shortfalls in Tax Credit delivery and eligible basis at the Adjuster amounts as set forth above. Reductions in Capital Contributions, if any, will occur initially at the current, and if necessary, future Capital Contributions, and will be guaranteed by the Guarantor. In the event the actual Tax Credits exceed the projected Tax Credits, the Investor shall be under no obligation to increase its Capital Contribution to invest in those excess Tax Credits, but may elect to do so, in its sole discretion.

Installment:	Amount:	Anticipated Conditions:
First (Closing)	$1,637,293 Fed. LIHTC $214,262 Fed. Energy ITC $44,404 Fed. Energy 45L (10%)	Closing of all financing and completion of all initial due diligence.
Second (Completion)	$8,186,466 Fed. LIHTC $1,071,312 Fed. Energy ITC $222,018 Fed. Energy 45L (50%)	100% lien-free Construction Completion.
Third (Stabilization)	$4,911,880 Fed. LIHTC $642,787 Fed. Energy ITC $133,211 Fed. Energy 45L (30%)	Stabilization - Later of 93% Economic Occupancy and 100% Qualified Occupancy and DSCR of 1.15
Fourth (Final)	$1,637,293 Fed. LIHTC $214,262 Fed. Energy ITC $44,404 Fed. Energy 45L (10%)	Receipt of Form 8609's for all buildings.

Thank you for your consideration and we look forward to the opportunity to work with you.

MERCHANTS CAPITAL

Very truly yours,

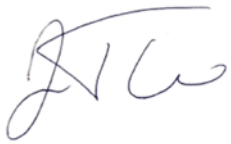

Joshua T. Reed
Senior Vice President
Merchants Capital Investments, LLC

EXHIBIT 3B

HUD 221(D)(4) TERM SHEET

MERCHANTS CAPITAL
410 Monon Blvd, 5th Floor
Carmel, IN 46032
Phone: 317-569-7420
merchantscapital.com

January 30, 2023

EQUAL HOUSING LENDER

Canopy Acquisitions, LLC
c/o Victor Atkins
Partner
801 E. Quincy Street
San Antonio, TX 78203

Re: Carville Park Apartments
Financing Proposal Letter of Intent

Dear Mr. Atkins:

Merchants Capital Corp. recognizes that Carville Park Apartments is a Low-Income Housing Tax Credit development located in Reno, NV. We expressly acknowledge that the development will be subject to the income averaging set aside income limits.

It is our understanding that Carville Park Apartments will consist of two hundred and nine (209) units, providing affordable rental housing for families, subject to various special use restrictions. The income/rent categories within the development are as follows:

- One hundred and ninety-eight (198) units will be set aside for households earning at or below fifty percent (50%) of the area median income;
- Ten (10) HOME units will be set aside for households earning at or below fifty percent (50%) of the area median income;
- One (1) non-revenue manager unit

Merchants Capital will provide FHA 221(d)(4) construction and permanent financing for Carville Park Apartments under the following terms and conditions:

BORROWER:	To-be-formed SPE
LOAN AMOUNT:	$15,425,000
CONSTRUCTION INTEREST RATE:	8.00%*
PERMANENT INTEREST RATE:	6.50%*
TERM:	40 Years plus Construction Period
AMORTIZATION:	40 Years; Interest-Only during Construction Period
MIP:	0.25% (Broadly Affordable)
FEE:	1.50% of final Loan Amount
COLLATERAL	1st REM

**Interest Rate to be confirmed at time of Rate Lock*

Borrower's Initials:_____

This proposal is subject to the borrower's ability to obtain and syndicate IRS Section 42 Low-Income Housing Tax Credits for the development, in an amount and under terms satisfactory to Merchants Capital Corp. and the following conditions:

1. Final review and approval of the financial forecasts;

2. Final review and approval of plans and specifications;

3. Review and approval of appraisal and environmental reports;

4. Completion of constructions and satisfactory inspection by an authorized architect as approved by Merchants Capital Corp.;

5. Verification of funding of equity and any other funding sources;

6. Full due diligence and approval by Merchants Capital Corp.

Please understand this is a letter of intent to provide financing and is not a commitment. Thank you for the opportunity to participate in this development.

Sincerely,

Lee Oller
_____
Lee Oller, Executive Vice President
Merchants Capital Corp.

Accepted and agreed to this ____ day of _____, 2023.

Canopy Acquisitions, LLC

_____
By: Victor Atkins, Partner

EXHIBIT 3C

AFL-CIO HIT LETTER OF INTENT

May 4, 2023

Mr. Rob Benner
Northern Nevada Development Corporation
1819 Hymer Avenue
Sparks, Nevada 89431

RE: Letter of Interest for Carville Park Apartments
Reno, Nevada

Dear Mr. Benner:

The American Federation of Labor and Congress of Industrial Organizations Housing Investment Trust (the "Trust") is pleased to have the opportunity to express its interest in providing construction and permanent debt financing for the substantial rehabilitation of Carville Park Apartments (the "Project") located in Reno, Nevada. The Project consist of 208 units of affordable rental housing.

With $6.3 billion in net assets as of March 31, 2023, the Trust provides capital for new construction, substantial rehabilitation, and preservation of affordable and market-rate multifamily projects nationwide, using 100% union labor. The Trust focuses its investments on housing projects that provide competitive returns to our union and public pension fund investors, create union construction jobs and strengthen cities.

Since our inception in 1984, HIT has invested $10.4 billion dollars throughout the United States, to create and preserve over 125,000 units of housing, 67% of which are affordable. We appreciate how you have created a plan that modernizes the Project, and are particularly proud that a portion of the Project's financing is proposed to come from the Nevada State Infrastructure Bank's Affordable Housing Revolving Fund.

Despite our interest in being involved, at this time this letter does not constitute a commitment from the Trust to provide financing for the Project. Any commitment must follow a deliberative process which would articulate the general terms and conditions upon which the Trust would consider providing financing. The actual terms and conditions of any commitment issued by the Trust would be dependent upon the results of the Trust's review and analysis of the underwriting and due diligence for a particular phase of the Project, as well as Trust Investment Committee approval. Any such commitment would be in writing and clearly identified as a commitment.

Thank you for your consideration of the Trust's capabilities as you move forward with this major endeavor. If you have any questions, please feel free to contact me at (626) 660-4155.

Best Regards,



Ted Chandler
Senior Managing Director- Strategic Initiatives

EXHIBIT 4A

PURCHASE AND SALE AGREEMENT

The Partnership anticipates having a formal purchase and sale agreement within the next 60-days. The applicant will update this section with the executed agreement once available. In the interim, please refer to Exhibit 4B Development Partnership MOU for detail regarding the terms of the sale.

EXHIBIT 4B

DEVELOPMENT PARTNERSHIP MOU

MEMORANDUM OF UNDERSTANDING
CONCERNING PROPOSED DEVELOPMENT PARTNERSHIP

December 1, 2022

Via E-Mail
Rob Benner
Secretary-Treasurer
Northern Nevada Building & Construction Trades Council Development Corporation
Building & Construction Trades Council of Northern Nevada
1819 Hymer Ave, Suite 106
Sparks, NV 89431

RE: Development Partnership to Provide Affordable Housing in Northern Nevada

Mr. Benner:

This Memorandum of Understanding ("MOU") is made effective as of [Publish Date] (the "Effective Date") between the Northern Nevada Building & Construction Trades Council Development Corporation, a Nevada nonprofit corporation ("Dev Corp" or Seller"), the Building & Construction Trades Council of Northern Nevada, a Nevada nonprofit corporation ("Trades Council"), and Canopy Acquisitions, LLC, a Wyoming limited liability company, or its assigns ("Developer"). Dev Corp is a 501(c)(3) tax exempt organization whose mission is to provide affordable housing. Trades Council is a 501(c)(5) tax exempt organization, whose mission is to train and support members of the building and construction trades in northern Nevada. Developer engages in the development of affordable housing. The parties hereby agree to work cooperatively on the Project (as defined below), to redevelop Property 1 (as defined below), to acquire and redevelop Property 2 (as defined below), and to potentially acquire and redevelop one or more of the Future Properties (as defined below), in accordance with the terms of this MOU.

In order to accomplish the forgoing, the parties agree as follows:

OVERVIEW & DEFINITIONS

Project: The "Project": the redevelopment of Property 1 (as defined below) and the acquisition and redevelopment of Property 2 (as defined below) to serve as affordable housing. The existing HAP Contract (as defined below) and the current residents at Property 1 may be transferred to Property 2 or to one or more Future Properties (as defined below). The Project may also include the acquisition and redevelopment of future properties in the northern Nevada area, as agreed by the parties ("Future Properties").

Property 1:	"Property 1": Carville Park Apartments: the 52-unit (208-bed), ± 82,095 SF (± 69,966 NRSF), 100% subsidized Section 8 project, with an existing Section 8 HAP contract providing subsidies for up to 208 residents, currently serving very low-income and extremely low-income seniors, consisting of ten (10) residential buildings and one (1) leasing office, all two (2) stories, and 134 parking spaces, located on Carville Drive between Sutro Street and Arnold Drive in Reno Nevada, comprised of: 1244 Carville Dr., Reno, NV 89512: ± 82,095 SF (± 69,966 NRSF) (4.39 acres) multiple residential low-rise buildings and office space APN: 008-084-37; and 0 Arnold Dr., Reno, NV 89512: ±5,924 SF (0.136 acres) vacant land APN: 008-086-07.
Property 2:	"Property 2": The Reno Regency: collectively, The Main Building, The Commercial Building, The Lake Street West Parking Lot and The Evans/6th Street Parking Lot. The Main Building: consisting of the eleven (11) story, ± 133,478 SF combination apartment and commercial space and 49 parking spaces located on Lake Street between East 5th Street and East 6th Street in Reno Nevada, comprised of: 590 Lake Street: ± 125,322 SF, plus ± 6,525 SF finished basement, plus ± 1,631 SF unfinished basement; Apartment/Commercial, and APN: 007-301-22. The Commercial Building: consisting of the ± 14,375 SF commercial space and paved parking lot located on the northeast, corner of Evans Avenue and East 6th Street in Reno Nevada, comprised of: 555 Evans Ave: ± 13,735 SF; Commercial; APN: 007-301-18, and vacant land at Evans Ave (0.321 acres) APN: 007-301-20. The Lake Street West Parking Lot: consisting of the unimproved ± .43-acre paved parking lot located on Lake Street between East 5th Street and East 6th Street in Reno Nevada, comprised of: vacant land at 535 Lake Street (0.431 Acres) APN: 007-501-01. The Evans/6th Street Parking Lot: consisting of the unimproved ± .64-acre paved parking lot located on the southeast, corner of Evans Avenue and East 6th Street in Reno Nevada, comprised of: vacant land at Evans Street (0.643 Acres) APN: 007-362-19.
Partnership:	The to be formed partnership or partnerships formed to carry out the Project ("Partnership")
Developer:	Canopy Acquisitions, LLC, or its assigns ("Canopy" or "Developer")
Seller:	Northern Nevada Building & Construction Trades Council Development Corporation ("Dev Corp" or "Seller")
Non-Profit Partner:	Northern Nevada Building & Construction Trades Council Development Corporation ("Dev Corp" or "Seller")
Union Partner:	Building & Construction Trades Council of Northern Nevada ("Trades Council")
Lending Partner:	Housing Investment Trust ("HIT" or "Lending Partner")
Non-Profit Partner Agent:	HIT Advisors, agent to the Non-Profit Partner pursuant to a separate agreement between Non-Profit Partner Agent and Non-Profit Partner ("HIT Advisors" or "Non-Profit Partner Agent")
Property Manager:	Building & Construction Trades Council of Northern Nevada, subject to the terms of this MOU and lender/Investor Partner approval, or such other entity serving as the property manager as selected by Developer ("Property Manager")
Investor Partner:	TBD tax credit investor selected by Developer ("Investor Partner")
Guarantor:	TBD ("Guarantor")

DEVELOPMENT PLAN

Acquisitions:	Acquisition of Property 1: Subject to the terms of this MOU and the purchase and sale LOI for Property 1 (attached as Exhibit E), the Partnership will acquire a fee simple or ground lease interest in Property 1 from the Seller through an arm's length market transaction, taking ownership through a newly formed special purpose entity, for a purchase price based on the fair market value as supported by a third party appraisal and mutually agreed to by the parties (the "Purchase Price"). The Partnership will obtain the financing sources discussed herein to finance the acquisition and cost of rehabilitating Property 1. The parties understand that Property 1 may serve as collateral for such financing. The parties agree to work in good faith and to use their best efforts to facilitate the successful acquisition/ground lease and redevelopment of Property 1. The parties acknowledge and agree to use reasonable efforts to adjust the economic terms of the agreement, including without limitation the Purchase Price, prior to Closing to maintain the economic terms of the agreement. Acquisition of Property 2: Subject to the terms of this MOU and the purchase and sale LOI for Property 2 dated August ___, 2022 negotiated by Developer and the sellers of Property 2, the Partnership will acquire fee simple interest in Property 2.
Redevelopment Plan:	Overview: The Partnership shall undertake the redevelopment of Property 1 and the redevelopment of Property 2 to serve low-income residents. Tenant Relocation: Developer shall administer the timely implementation of any required tenant relocation during the rehabilitation of the Project, including the supervision of any third-party relocation consultants and preparation of a rehabilitation plan. Transfer of the HAP Contract: The existing Section 8 HAP Contract at Property 1 that provides subsidies for up to 208 residents may be transferred to Property 2. Trades Council and Dev Corp agree to use all reasonable efforts to aid and cooperate in the transfer of the HAP Contract from Property 1 to Property 2, if that proves optimal for maximizing the total value of Property 1 and Property 2 combined.
Construction Scope:	See Exhibit B for preliminary construction scope.
Project Development Budget:	See Exhibit C for the preliminary financial projections.
Operations:	Commercial Space: Provided that additional commercial or common space exists at Property 2, or at Future Properties that adequately suits the needs of Trades Council and Dev Corp's plans for developing a site for the apprenticeship preparation program and/or labor temple, the Partnership will incorporate such uses into the Project so long as they are economically feasible and do not impair the success of the Project, as determined jointly by the parties.

	Property Taxes: The Project will seek a 100% property tax exemption under Section 361.082 of the Nevada Code. Section 361.082 of the Nevada Code grants a 100% property tax exemption for the portion of the property deemed affordable housing, which is defined as a property receiving financing through the federal HOME program. Staff: Subject to the terms of this MOU, all existing staff at Property 1 shall be given the opportunity to retain their employment either at Property 1 or at Property 2. (See below section regarding Union Matters & Labor Relations). Property Management: Subject to the approval of the to be determined Investor Partner and if deemed appropriate by legal counsel, the Partnership intends to employ Trades Council as the Property Manager at market fees and subject to a standard property management agreement. The parties agree that if the Investor Partner does not consent or if it is not in the best interest of the Partnership (as determined in the sole discretion of Developer) for Trades Council to serve as the Property Manager, the Partnership will enter into an agreement for property management services with a qualified third-party property manager acceptable to Investor Partner as selected by Developer. Developer shall use reasonable efforts to facilitate Investor Partner's approval of Trades Council serving as the Property Manager. Notwithstanding the forgoing, the parties agree to maintain the current economics to the Trades Council under the existing management agreement for Property 1.
State and Federal Tax Credits:	The Project intends to pursue the following state and federal tax credits: (i) Federal Section 42 Low-Income Housing Tax Credits; (ii) Federal Historic Preservation Tax Credits; (iii) Federal New Markets Tax Credits, if appropriate and available; and (iv) Nevada State Low-Income Housing Tax Credits. See Exhibit C for the preliminary financial projections.
Equity Financing:	In order to attract an Investor Partner, Developer shall cause the Partnership to submit applications for the tax credits as set out above. Developer will use reasonable efforts to accommodate any requests by Trades Council or Dev Corp with respect to the selection of an Investor Partner; provided that Developer will have the joint approval right to admit the Investor Partner of its choosing.
Hard Debt Financing:	HIT Financing: The Partnership will utilize financing eligible for investment by the HIT, and the HIT shall have a "last look" at provision of the financing.
Soft Debt Financing:	Soft Debt – HOME Funds: The Partnership intends to seek a nominal allocation (likely less than $50,000) of soft debt under the HOME funds program in order to facilitate the by right 100% property tax exemption under Section 361.082 of the Nevada Code. Soft Debt – Affordable Housing Investment Trust Fund: The Partnership anticipates pursuing financing through the Nevada Affordable Housing Investment Trust Fund. The parties understand and agree that this soft debt financing is contingent upon the Partnership obtaining matching funds from HIT, and the parties agree to use their best efforts to facilitate obtaining such matching funds from HIT.

Soft Debt – Seller Financing: Seller agrees to negotiate use of net proceeds from the sale of Property 1 to the Partnership to provide soft financing to the Partnership (the "Seller Note"). The amount to be negotiated depends on the feasibility and needs of the Project, after maximizing use of other available funds. Seller agrees that such soft financing may be assigned between any of the properties in the Project such that it may be used in a manner that maximizes the economic benefit from such financing. The Seller Note will be in the form of a 25-year loan, accruing and compounding interest at the Applicable Federal Rate and may be subordinate to other financing sources provided for herein. In no event shall the Seller Note be treated as forgiven or forgivable debt.

Deferred Developer Fee: Any portion of earned Developer Fee that is deferred shall be treated as a form of soft debt financing accruing interest at a rate of 5% compounded annually payable in accordance with the Cash Flow Waterfall.

Other Financing:

Home Means Nevada Initiative, American Rescue Plan, State and Local Fiscal Recovery Funds: The Partnership will seek a grant from the State of Nevada's Home Means Nevada Initiative designed to disburse a portion of the State and Local Fiscal Recovery Funds provided through the enactment of the American Rescue Plan.

Nevada State Low-Income Housing Tax Credit Sale: The Partnership intends to secure an award for and to sell to a third party, its allocation of Nevada State Low-Income Housing Tax Credits, the proceeds of which are expected to be available on or shortly after Closing.

Timeline:

See Exhibit A for full estimated timeline.

UNION MATTERS & LABOR RELATIONS

Union Contractors:

Developer shall require the general contractor to hire union contractors for all construction and rehabilitation work at the Project. Trades Council, shall solicit its affiliates to compile a list of potential qualified union and signatory subcontractors for the Project to be delivered to all bidding general contractors, upon request of the general contractor. Trades Council shall be responsible for collecting and timely providing current copies of all collective bargaining agreements to Developer and selected general contractor prior to the 75% Construction Document pricing to ensure bidding reflects the correct wages and benefits prior to Prime Contract Execution by general contractor. The provisions of this paragraph are subject to the terms of the Project Labor Agreement, described below.

If general contractor is not successful in procuring a competitive bid from the list of qualified union subcontractors, as provided by Trades Council affiliates and/or Trades Council, and provides written notice to Developer and Dev Corp of the same, then general contractor may proceed with hiring a qualified, non-union subcontractor to perform the work; provided that Dev Corp and/or Trades Council shall have thirty (30) days from the receipt of the written notice to

	obtain a competitive bid from a qualified contractor to perform the work. A bid for a particular scope shall be not competitive if it has a material adverse effect on the overall project budget.
Project Labor Agreement (PLA):	Dev Corp shall timely provide Developer with a preliminary draft of the Project Labor Agreement ("PLA") with the parties agreeing to finalize the PLA prior to commencing bidding.
Collective Bargaining Agreement (CBA):	Dev Corp agrees to provide Developer copies of any CBA currently in effect or relating to Property 1. Developer intends that any CBA covering any existing staff working at Property 1 remains in place after Closing. Following the Effective Date hereof, the negotiation of any amendment to or renewal of an existing CBA, or the negotiation a new CBA will, to the maximum extent permitted, be subject to Developer approval.
Unfunded Pension Withdrawal Liability:	Prior to Closing on Property 1, Trades Council agrees to provide to Developer the most recent statement detailing the unfunded pension withdrawal liability specific to the Property 1 employees. The parties agree that prior to closing on the Property, Trades Council or Dev Corp will be considered to be the "employer" for purposes of any unfunded pension withdrawal liability. To the extent that Dev Corp or Trades Council is the Property Manager post-closing, the parties agree that Dev Corp or Trades Council will be considered to be the "employer" for purposes of any unfunded pension withdrawal liability. If Dev Corp or Trades Council is not serving as the Property Manager post-Closing, Dev Corp and Trades Council agree to indemnify the party that is considered to be the employer from any such unfunded pension withdrawal liability and further agree to establish and fund, or cause to be funded, a separate reserve to cover such unfunded pension withdrawal liability in an amount equal to or in excess of the amount stated on the unfunded pension withdrawal liability statement provided by the respective multi-employer pension fund which represents the Property 1 staff, as updated from year to year.
Property Staff:	The parties agree that initially and throughout the term of the Partnership and the Project, all current and future staff at Property 1, at Property 2 and at any Future Properties will be hired, evaluated and retained based on performance and merit, in the reasonable discretion of Developer, and if applicable, the third-party Property Manager. Dev Corp and Trades Council agree to make no staff changes at Property 1 during Developer's feasibility period without the prior written approval of Developer. Included as an addendum to this MOU is the current Employee Handbook and the current staff roster inclusive of employee names, respective dates of employment, wages, union benefits and any other benefits offered by Employer, but not required under the CBA. Subject to the forgoing, the parties intend that existing staff at Property 1 be given the opportunity to retain their employment during and after the rehabilitation of Property 1. No staff working at Property 1 will be terminated unless such termination is conducted in accordance with the CBA covering such staff member.

PARTNERSHIP STRUCTURE, PARTNER ROLES & RESPONSIBILITIES

Partnership Structure:

Subject to requirements of Investor Partner, the partnership structure for the Project as well as for future acquisitions, is anticipated to be as follows and as set out in the org chart attached as Exhibit D:

Seller currently owns Property 1 and will transfer fee simple or a ground lease interest to Property 1 to a to-be-formed Nevada limited partnership, the Partnership, in accordance with the Purchase & Sale Agreement LOI attached hereto as Exhibit E.

Developer or its assign will serve as special limited partner of the Partnership, owning a 0.001% interest therein and having control over the day-to-day Partnership decisions.

Dev Corp or its affiliate will serve as general partner of the Partnership, owning a 0.001% therein, and shall be involved in the operations of Property 1 and shall in all cases materially participate in the development and operation of the property within the meaning of Section 469(h) of the Internal Revenue Code. To the extent required by Investor Partner or deemed necessary in the sole discretion of Developer, Dev Corp's interest may be required to be held through an entity that has made an election with the IRS to be taxed as a corporation.

A to be determined third party equity investor, the Investor Partner, will acquire a limited partner interest in the Partnership, owning a 99.98% interest therein.

The rights and responsibilities of each party will be set forth in a limited partnership agreement, to be entered into at Closing among the parties.

Pre-Closing Seller Roles and Responsibilities:

Comply with MOU & LOI: Seller agrees to comply with terms of this MOU and with the terms of the purchase & sale agreement LOI attached hereto as Exhibit E.

Staffing and Labor Relations: Seller agrees to include Developer in all communications with Labor Representatives of the employee bargaining unit. Any changes to the existing staff must be approved in writing by Developer prior to any staff changes being made.

Due Diligence: Seller shall cooperate with Developer as reasonably requested with respect to timely responding to due diligence and underwriting requirements regarding to the acquisition of Property 1, any debt, equity or other financing or any other reasonable requests. Seller shall timely provide Developer copies of any CBA currently in effect or relating to Property 1 as well as a copy of the current employee handbook related to Property 1 and the current staff roster for Property 1.

HAP Contract Transfer and Compliance: Seller shall fully cooperate with Developer in facilitating the transfer of the HAP Contract should Dev Corp and Developer agree that transfer of the HAP contract is optimal for feasibility of redevelopment of both Property 1 and Property 2. At all times prior to Closing, Seller shall fully comply with the terms of the HAP Contract.

Pre-Closing Non-Profit Partner Roles and Responsibilities:

Solicitation and Onboarding of Subcontractors: In cooperation with the selected general contractor, Dev Corp may assist Trades Council in soliciting and compiling a list of potential qualified union and signatory subcontractors for the Project. Additionally, Trades Council and affiliates will be responsible for collecting and timely providing current copies of each trade specific collective bargaining agreement to Developer and the general contractor for each construction trade expected to perform work at the Project. Prior to Developer's selection of the general contractor, Trades Council agrees to attend the "pre-award" or "pre-job" meeting to ensure the project budget and schedule prepared by the general contractor complies with the requirements of the PLA and all applicable local CBAs. Following the "pre-award" or "pre-job" meeting, Trades Council agrees to confirm as such.

Consent to Scope of Work: Dev Corp agrees to timely consent to the scope of work as reasonably determined by Developer. Developer agrees to consider in good faith all changes requested by Dev Corp and further agrees to implement all reasonable changes so long as such changes, in Developer's sole discretion, are not expected to impact the proposed budget, schedule or level of risk.

Lend Proceeds to the Partnership as Soft Debt: Dev Corp commits to negotiate lending the Partnership, or its assigns net proceeds from the sale of Property 1. Dev Corp agrees that such soft financing may be assigned between any of the properties in the Project such that it may be used in a manner that maximizes the economic benefit from such financing. Dev Corp further agrees to assist the Partnership in structuring the soft debt in a way to provide the maximum overall benefit to the Partnership, including by splitting the loan between multiple properties within the Project. Dev Corp agrees that the soft debt will be in the form of a 25-year loan accruing and compounding interest at the Applicable Federal Rate and may be subordinate to other financing sources provided for herein. Negotiation of any such loan shall be after maximizing other sources of Soft Debt, and subject to Dev Corp's review of feasibility of development. In no event shall provision of Soft Debt reduce the economics currently realized by Dev Corp and Trades Council.

Unfunded Pension Withdrawal Liability Statement: Dev Corp will request, at Dev Corp's sole cost and expense, and shall provide to Developer no later than sixty (60) days prior to Closing, the most recent Unfunded Pension Withdrawal Liability statement related to Property 1 staff as produced by the respective multi-employer pension fund representing the staff.

Community Support: The parties shall cooperate to interface with the community and local government officials in connection with garnering support for the Project. The parties will consult with each other and coordinate the response to any media inquiries and/or public support or opposition to the Project. The parties shall organize and attend meetings with the residents of the Project.

	Maintain Non-Profit Status and Good Standing: Dev Corp agrees that it shall at all times maintain its tax-exempt status with the IRS and good standing with the State of Nevada. To the extent necessary or required, Dev Corp agrees to amend its bylaws to comply with the Partnership Agreement. Cooperation: Dev Corp agrees to fully corporate with and aid Developer in applying for or otherwise obtaining the financing sources discussed herein.
Pre-Closing Trades Council Roles and Responsibilities:	Solicitation and Onboarding of Subcontractors: In cooperation with selected general contractor, Trades Council shall solicit its affiliates to compile a list of potential qualified union and signatory subcontractors for the Project. Trades Council agrees to represent the Partnership with respect to all communications with, solicitation and onboarding of, and all other relations with labor organizations and building and construction trades members in order to facilitate the redevelopment of the Project, including but not limited to: (i) procuring copies of all applicable CBAs, (ii) wage and benefits rates for each trade, and (iii) a list of the individual trades represented by each local. Prior to Developer's selection of the general contractor, Trades Council agrees to facilitate a "pre-award" or "pre-job" meeting to ensure the project budget and schedule prepared by the general contractor complies with the requirements of the PLA and all applicable local CBAs. Following the "pre-award" or "pre-job" meeting, Trades Council and Dev Corp agree to confirm as such. Community Support: The parties shall cooperate to interface with the community and local government officials in connection with garnering support for the Project. The parties will consult with each other and coordinate the response to any media inquiries and/or public support or opposition to the Project. The parties shall organize and attend meetings with the residents of the Project.
Pre-Closing Developer Roles and Responsibilities:	Due Diligence: Developer will manage the due diligence and acquisition process through Closing. Developer and Dev Corp shall have a mutual right to access any due diligence information, whether financial, legal, organizational or otherwise, with respect to the Project. Design and Other Professionals: Developer will be responsible for obtaining the services of design professionals for the design of any plans for the Project, as well as the selection and engagement of other consultants and service providers including without limitation, environmental consultants, zoning analysts, geotechnical consultants, engineers, contractors, subcontractors, architects, market analysts, appraisers and legal counsel. Governmental Approvals and Permits: Developer, with reasonable cooperation and assistance of Dev Corp when requested, will be responsible for obtaining all governmental approvals and permits needed to rehabilitate and operate Property 1 and Property 2. Developer Staff; Meetings: Developer will furnish a competent staff member for the proper administration, coordination and supervision of the Project. Developer agrees to attend meetings with Dev Corp at such reasonable times and places as shall be reasonably decided by Dev Corp

	and to present reports on the progress of obtaining financing, identifying sites for acquisition and achieving Closing. Financing Plan; Execution of Financing Documents: Developer shall be responsible for the preparation of the financing plan for the Project including acquisition, predevelopment, construction and permanent financing. Notwithstanding the forgoing, Developer shall not cause the Partnership to execute any financing documents in connection with the Project without the prior written consent of Dev Corp which shall not be unreasonably withheld, conditioned or delayed. Pre-Development Costs: Developer agrees to lend the Partnership sufficient capital to fund the necessary pursuit costs related to the Project, in accordance with the Partnership Economics Section below.
Post-Closing Non-Profit Partner Roles and Responsibilities:	Maintain Non-Profit Status and Good Standing: Dev Corp agrees that it shall at all times maintain its tax-exempt status with the IRS and good standing with the State of Nevada. To the extent necessary or required, Dev Corp agrees to amend its bylaws to comply with the Partnership Agreement. Decision Making: Dev Corp and Developer acknowledge and agree that all Partnership decisions are subject to the Partnership Agreement and applicable law, and shall be made on the basis of what is in the best interest of the Partnership as a whole, complying at all times with applicable fiduciary obligations and responsibilities to the Partnership. Unfunded Pension Withdrawal Liability: Dev Corp agrees that to the extent possible, Dev Corp or Trades Council will be considered the "employer" for purposes of any unfunded pension withdrawal liability. To the extent that it is not practicable for Dev Corp or Trades Council to be the employer, Dev Corp agrees to indemnify the party that is considered to be the employer from any such unfunded pension withdrawal liability and further agree to establish and fund, or cause to be funded, a separate reserve to cover such unfunded pension withdrawal liability in an amount equal to or in excess of the amount show on the unfunded pension withdrawal liability statement from the respective multi-employer pension fund representing the Property 1 staff, as updated from year to year.
Post-Closing Trades Council Roles and Responsibilities:	Labor Relations: Trades Council agrees to assist the Partnership regarding all labor relations with respect to the Project and to do so with the best intentions and outcome for the Partnership. Solicitation and Onboarding of Subcontractors: Trades Council agrees to represent the Partnership with respect to all communications with, solicitation and onboarding of, and all other relations with labor organizations and building and construction trades members in order to facilitate the redevelopment of the Project. Maintain Non-Profit Status: Trades Council agrees that it shall at all times maintain its tax-exempt status with the IRS and good standing with the State of Nevada.

	Unfunded Pension Withdrawal Liability: Trades Council agrees that to the extent possible, Dev Corp or Trades Council will be considered the "employer" for purposes of any unfunded pension withdrawal liability. To the extent that it is not practicable for Dev Corp or Trades Council to be the employer, Trades Council agrees to indemnify the party that is considered to be the employer from any such unfunded pension withdrawal liability and further agree to establish and fund, or cause to be funded, a separate reserve to cover such unfunded pension withdrawal liability in an amount equal to or in excess of the amount show on the unfunded pension withdrawal liability statement from the respective multi-employer pension fund representing the Property 1 staff, as updated from year to year. Trades Council shall timely request and timely provide to Developer the updated statement when available each year.
Post-Closing Developer Roles and Responsibilities:	Operations: Subject to the Partnership Agreement and applicable law, Developer shall have 100% operational control over Partnership Decisions including the selection of any third-party Property Managers as well as the on-going evaluation of any Property Managers hired for the Project. Construction Management: Developer shall manage the construction process including the rehabilitation of Property 1, Property 2, and any Future Properties. Developer shall be responsible for overseeing the general contractor and for making all decisions regarding the construction process. Partnership & Asset Management: Developer shall perform partnership and asset management services on behalf of the Partnership and shall prepare annual budget reports for the partners. Developer shall be compensated for such services as set out in the below section on Partnership Economics. Tenant Relocation: Developer shall administer the timely implementation of the tenant relocation, including the hiring and supervision of any third-party relocation consultants and the preparation of a relocation plan. Guarantees: Developer or its assigns will provide all guarantees required in connection with the debt and equity financing for the Project. Program Compliance: Developer will provide all program compliance in connection with the Project.

PARTNERSHIP ECONOMICS

Pre-Development Costs:	Developer will lend the Partnership sufficient capital to fund the necessary pursuit costs related to the Project. Any such capital shall bear interest at an annual rate of 15% compounded daily (not to exceed highest allowable rate). Principal and accrued interest of such loan shall be fully repaid to Developer at Closing. Should Developer be unable or unwilling to provide pursuit costs on these terms, Dev Corp will provide the capital for the pursuit costs in consideration of an additional 9.4%

	of the Developer Fee, as detailed in the Developer Responsibility and Fee Allocation Chart attached as Schedule 1. The In the event the Closing for the Project does not occur because of a default by Dev Corp or Trades Council, Dev Corp shall reimburse Developer for all pursuit costs related to items of economic benefit to Seller, including but not limited to architectural plans, permits, surveys, third party reports and tax projections. The anticipated pursuit costs are detailed on the preliminary financial projections attached as Exhibit B. In the event the Closing for the Project does not occur due to a breach for Cause by Seller (as is to be defined in the agreed upon Purchase and Sale Agreement for Property 1 or any ancillary or related agreements thereto), then Developer shall be entitled to recover from Dev Corp an amount equal to the pursuit capital that was funded by Developer plus accrued interest as set forth in the first paragraph of this section. Such amount shall be secured by Seller's interest in Property 1.
Property Management Fee:	The Partnership will enter into an agreement for property management services with the Property Manager (the "Property Management Agreement"). Developer will negotiate the Property Management Agreement with the Property Manager, which negotiations shall be at arm's length and such property management fees will be at market rates.
Asset Management Fee:	Developer: Developer shall perform asset and partnership management services on behalf of the Partnership and shall prepare annual budgets and reports for the partners. Developer shall be compensated by customary asset and partnership management fees. Any expenses related to such services shall be paid by the Partnership. Investor (if applicable): TBD based on Investor Partner requirements.
Development Fee:	In order to maximize the economic benefit of the various state and federal tax credits, the Partnership agrees to pay Developer and Dev Corp the maximum Developer Fee allowed under the applicable program or programs related to the subject property. The Developer Fee will be earned as follows: any portion attributable to the specific projects eligible acquisition basis will be earned at Closing of the Partnership (the "Cash Portion"), and any remaining portion shall be earned on a monthly basis based on the portion of the Project placed in service in that month (the "Deferred Portion"). Developer and Dev Corp (or its Agent) will each be entitled to such portion of the Developer Fee for Property 1, Property 2 and Future Properties as detailed in the Developer Responsibility and Fee Allocation Chart attached as Schedule 1. Subject to Investor Partner approval, the Cash Portion of the Developer Fee is expected to be paid in multiple installments on or prior to the final equity installment (to-be-negotiated with Investor Partner).

	The Deferred Portion of the Developer Fee shall be treated as soft debt in accordance with the Soft Debt Financing subsection of the Development Plan section above.
Distributions of Operating Cash Flow:	Operating Cash Flow shall mean, with respect to any fiscal year, net operating income excluding interest income from reserves, reduced by the sum of the following: (a) all principal and interest payments and other sums paid on or with respect to any loans (with the exception of any loans which are payable solely from Operating Cash Flow), (b) resident accounts receivable in excess of sixty (60) days, and (c) such cash as is necessary to fund the replacement reserve which includes the current fiscal year's required monthly deposits as well as outstanding required deposits from previous years, and any additional reserves as are established. Subject to Investor Partner approval and subject to the terms of the loan documents or other agreements related to the financing, the Operating Cash Flow shall be paid in the following order and priority: 1) To Investor Partner, to the extent of any amount which Investor Partner is entitled to receive from Operating Cash Flow as payment to satisfy any Investor Partner loans, and any other amounts or payments owed to Investor Partner pursuant to the terms of the definitive Partnership Agreement or any guaranty; 2) To Investor Partner or its affiliate, any accrued and unpaid Asset Management Fee; 3) To replenish the operating reserve to the extent of withdrawals made therefrom; 4) To Developer and Dev Corp (and/or its Agent), to pay any unpaid Deferred Portion of the Developer Fee, and any accrued but unpaid interest thereon; 5) To Dev Corp, Developer or their affiliates to return any other amounts treated as loans and not yet paid, and any accrued but unpaid interest thereon (excluding the Seller Note); 6) To the extent Property Manager is Dev Corp, Trades Council, or an affiliate, to the Property Manager to pay any unpaid deferred property management fee; 7) To Developer, any accrued and unpaid management fees due to Developer; 8) To repay any unpaid interest for the current term on the then outstanding principal balance of the soft debt under the HOME funds program; 9) To repay any unpaid interest for the current period on the soft debt through the Nevada Affordable Housing Investment Trust Fund; 10) To repay any unpaid interest for the current period on the HIT debt through the Nevada Affordable Housing Investment Trust Fund; 11) To repay any unpaid interest for the current period on the Seller Note; 12) To the extent of 90% of any remaining cash flow, to Developer as an incentive management fee; and 13) Finally, the remaining cash flow, if any, shall be distributed pro rata to the partners in accordance with their respective ownership interest in the Partnership.
Distributions of Sale and/or Refinance Proceeds:	Subject to Investor Partner and lender approval (excluding the Seller Note, which is hereby approved), and the terms of the definitive agreements, upon the occurrence of a sale/refinancing, net cash from such sale/refinancing shall be paid in the following order and priority:

1) To Investor Partner, to the extent of any amount which Investor Partner is entitled to receive as payment to satisfy any Investor Partner loans, to pay any taxes of Investor Partner from the sale/refinancing and any related liquidation computed as if Investor Partner was a tax-paying entity and based on a tax rate equal to the highest rate applicable to corporations at the time of such distributions, and other payments owed to Investor Partner pursuant to the terms of the definitive agreements or the guaranty;

2) To Investor Partner or its affiliate, any unpaid and accumulated asset management fee;

3) To Investor Partner or its affiliate, any disposition fee set forth in the definitive agreements;

4) To the payment of all debts and obligations of the Partnership due upon the occurrence of such sale/refinancing, other than amounts owing to Dev Corp, Trades Council, or its affiliates under the definitive agreements;

5) To Developer and Dev Corp (and/or its Agent), to pay any unpaid Deferred Portion of the Developer Fee, and any accrued but unpaid interest thereon;

6) To Dev Corp, Developer, or their affiliates to return any amounts treated as loans pursuant to the definitive agreements and not yet paid, and any accrued but unpaid interest thereon (excluding the Seller Note);

7) To fund any reserves for contingent or unforeseen liabilities or obligations of the Partnership, as determined reasonably necessary, provided that the balance of any such reserve remaining at such time as such reserve is no longer necessary, shall be distributed in accordance with the remaining subparagraphs of this subsection;

8) To the extent Property Manager is Dev Corp or an affiliate, to the Property Manager to pay any unpaid deferred property management fee;

9) To the Developer, any accrued and unpaid management fees due to Developer;

10) If the sale/refinance occurs prior to the maturity date, to repay the accrued but unpaid interest on the soft debt under the HOME funds program up through the date of sale/refinance. If the project is sold to a third party that elects not to assume the debt, to repay the soft debt under the HOME funds program, applied first to accrued but unpaid interest and then to principal;

11) If the sale/refinance occurs prior to the maturity date, to repay the accrued but unpaid interest on the soft debt through the Nevada Affordable Housing Investment Trust Fund program up through the date of sale/refinance. If the project is sold to a third party that elects not to assume the debt obligations, to repay the soft debt through the Nevada Affordable Housing Investment Trust Fund program, applied first to accrued but unpaid interest and then to principal;

12) If the sale/refinance occurs prior to the maturity date, to repay the accrued but unpaid interest on the Seller Note up through the date of sale/refinance. If the project is sold to a third party that elects not to assume the debt obligations, to repay the Seller Note, applied first to accrued but unpaid interest and then to principal;

13) To the extent of 90% of any remaining net cash from the sale/refinance, to Developer as an incentive management fee; and

14) Finally, the remaining net cash from the sale/refinance, if any, shall be distributed pro rata to the partners in accordance with their respective ownership interest in the Partnership.

Right of First Refusal (ROFR):	If at any time following the 15-year compliance period specified in Code Section 42(i)(1), the Partnership receives a bona fide offer from an unrelated third party to purchase the subject property and related assets (which shall be deemed to include all operating, replacement and other reserves) which Developer desires to accept, then Dev Corp, so long as it is at the time of such exercise an eligible purchaser under Code §42(i)(7)(A) and affiliated with the Partnership, shall have a right of first refusal to purchase the subject property exercisable within 30 days after receipt of notification thereof. The Partnership shall have the right to solicit the bona fide third party offers described above. The purchase price for the subject property upon the exercise of such Right of First Refusal shall be the equal to the greater of (1) the fair market value of the subject property, or (2) the sum of (i) any other payments or amounts due or owing to the Investor Partner, including, but not limited to, payment of exit taxes, and (ii) the amount necessary to pay any outstanding debt on the Project.
Purchase Option:	Dev Corp shall have the option to purchase (i) beginning after the end of the credit period and ending one year thereafter, the Investor Partner's entire ownership interest in the Partnership; (ii) beginning after the end of the 15-year compliance period and ending one year thereafter, the Investor Partner's entire ownership interest in the Partnership; or (iii) beginning after the end of the compliance period and ending one year thereafter, the subject property. Notwithstanding the forgoing, the buyout option is only exercisable at such time or times the Dev Corp has satisfied all obligations and is not in default under any of the definitive agreements related to the subject property, and no event of bankruptcy has occurred or is pending with respect to Dev Corp. The buyout option related to (i) above shall be priced as follows: the purchase price shall equal the sum of (i) the greater of (1) the amounts that would be distributable to Investor Partner in the event of a sale/refinancing and assuming the net cash from such sale/refinancing were distributed in accordance with the definitive agreements (assuming the subject property is sold for its fair market value), or (2) the sum of any other payments or amounts due or owing to the Investor Partner under the definitive agreements, including, but not limited to, payment of exit taxes, and (ii) the aggregate amount of any accrued and unpaid asset management fee as of the date the buyout option is exercised plus any asset management fee that would have been payable to the Investor Partner for each remaining year of the 15-year compliance period. In addition, the exercise of this buyout option shall be subject to the delivery by Dev Corp of the following: (w) a post-transfer compliance and guaranty agreement executed by Dev Corp and Guarantor in form and substance reasonably acceptable to the Investor Partner, which shall include an indemnification of the Investor Partner with respect to any recapture, disallowance, reallocation, reduction or loss of housing credits, including any interest or penalties in connection therewith; (x) certification from the accountants that exercise of the buyout option at such time will not result in a tax credit reduction; (y) either (1) a recapture bond in the amount of any reduction or loss of housing credits and applicable penalties for the remaining 15-year compliance period, in form and substance acceptable to the Investor Partner, or (2) certified, current financial statements of the Guarantor reflecting a collective net worth (determined in accordance with methodology reasonably acceptable to Investor Partner) equal to at least $5,000,000, of which at least $500,000 of such net worth of the Guarantor shall be represented by free and clear cash, cash equivalents and liquid securities; and (z) payment of all out-of-pocket costs and expenses, including reasonable attorneys' fees incurred by Investor

Partner in connection with the exercise of the buyout option and review of the conditions and deliverables in connection therewith.

The buyout option related to (ii) above shall be priced as follows: the purchase price shall equal the greater of (1) the amounts that would be distributable to Investor Partner in the event of a sale/refinancing and net cash from such sale/refinancing were distributed in accordance with the definitive agreements (assuming the subject property is sold for its fair market value), or (2) the sum of any other payments or amounts due or owing to Investor Partner under the definitive agreements, including, but not limited to, payment of exit taxes.

The buyout option related to (iii) above shall be priced as follows: the purchase price shall equal the greater of (1) the fair market value of the subject property, or (2) the sum of (i) any other payments or amounts due or owing to Investor Partner under the definitive agreements, including, but not limited to, payment of exit taxes, and (ii) the amount necessary to pay any outstanding debt on the subject property. In the event of a buyout pursuant to subsection (iii) above, Dev Corp and Developer shall cooperate to obtain a full release of any guaranty obligations of the Developer and its affiliates.

MISC. MATTERS

Entire Agreement: This MOU and the exhibits and schedules hereto reflect the entire understanding between the parties and may only be amended in writing signed by all parties. The parties agree that this MOU is intended to serve as the outline of the rights, roles and responsibilities of the parties, as will be set out in the definitive agreements.

Assignment: Except as otherwise provided herein, the parties hereto are each permitted to assign any of its interest, benefits or responsibilities hereunder to: (i) any related third party, with the prior written consent of the other parties, which such consent shall not be unreasonably withheld, conditioned or delayed; or (ii) any other third party, with the prior written consent of the other parties.

Notice: Any notice, request, demand, instruction or other document to be given or served hereunder shall be in writing and shall be (i) delivered personally, (b) sent by overnight express courier, postage prepaid, or (iii) send by facsimile or electronically; each addressed to the parties at their respective addresses set forth below, and the same shall be effective upon receipt. A party may change its address at any time by noticing the other parties in accordance herewith.

Termination: This MOU shall continue until terminated as follows: (i) upon the written consent of the parties, (ii) if a closing on Property 1, Property 2 or any of the Future Properties has not occurred by December 31, 2023, (iii) if a party breaches its obligations hereunder and a non-breaching party provides notice of such breach and a 30-day opportunity to cure, and the breaching party fails to cure, then a non-breaching party may terminate this MOU by providing written notice thereof to the breaching

	party; provided however, Dev Corp may not terminate this MOU due to Trades Council's breach and Trades Council may not terminate this MOU due to Dev Corp's breach; or (iv) immediately if any party files for bankruptcy protection, makes an assignment for the benefit of creditors, has a receiver appointed to its assents, or generally becomes insolvent.
Exclusivity:	Seller and Trades Council agree that in order to induce Developer to commit the resources, forego other potential opportunities, and incur the legal, accounting, and incidental expenses necessary to properly evaluate and pursue Project, that, after the date hereof, Seller, Trades Council and their respective officers, directors, employees and agents shall not initiate, solicit, encourage, directly or indirectly, or accept any offer or proposal, regarding the possible acquisition of Property 1 or the development of the Project.
Confidentiality:	The parties will keep the terms and conditions and existence of this MOU confidential; provided, however, either party may disclose such terms and conditions (i) to their respective attorneys, accountants, lenders, prospective lenders, capital sources, partners, prospective partners, financing partners, prospective financing partners, contractors and architects who have a need to know such information, (ii) to the extent required by applicable law, and (iii) to the extent necessary to obtain any approvals, financing or permits required in order to consummate the transactions contemplated hereunder. Subject to the preceding sentence, any public announcements pertaining to this MOU, or any other related matter will be subject to the prior written approval of the parties. The parties hereby acknowledge that the Project plans on pursuing state and federal tax credits, grants and other sources of financing which may require disclosure of certain terms and conditions of the proposed transactions and certain other information related to the Project. Such disclosure shall not constitute a breach of confidentiality. Dev Corp, Trades Council, HIT and HIT Advisors acknowledge and agree that Developer may be subject to certain third-party obligations, including without limitation certain third-party confidentiality obligations, related to Property 2 and prospective Future Properties, and that the disclosure of any information related to Property 2 or prospective Future Properties shall require the prior written consent of Developer. The parties agree that if Dev Corp, Trades Council, HIT or HIT Advisors violate the confidentiality obligations herein, such party shall indemnify and hold harmless Developer from any third-party liability related to such breach.
Governing Law:	This Letter of Intent shall be construed pursuant to and governed by the laws of the State of Nevada (without giving effect to conflict of laws principles).

Notwithstanding anything contained herein to the contrary, the parties acknowledge and agree that the current discussions are preliminary in nature and may be terminated at any time by any party without liability and are not intended to create a legally binding obligation or commitment on the part of any party with the exception of the "Expenses," "Exclusivity," "Confidentiality" and "Governing Law" clauses above. It shall be and remain in the sole discretion of each party whether or not to enter into the transactions contemplated by this MOU. Neither the expenditure of funds in reliance on this MOU nor

part performance of any provision of this MOU shall alter the forgoing provisions of this paragraph. The parties acknowledge that any definitive agreements may contain additional terms and provisions that are not contemplated by this MOU.

If the terms outlined above meet with your approval, please sign and return this MOU within five (5) days.

[Signatures to Follow]

DocuSign Envelope ID: 6E185939-A733-413F-8429-A35B765261E3

Effective this 1st day of December, 2022.

Developer:

CANOPY ACQUISITIONS, LLC

(a Wyoming limited liability company)

DocuSigned by:

By: _____
04F32F740C57465...

Victor Atkins, Vice-President 1/8/2023

Seller/Non-Profit Partner:

NORTHERN NEVADA BUILDING & CONSTRUCTION TRADES COUNCIL DEVELOPMENT CORPORATION

(a Nevada nonprofit corporation)

DocuSigned by:

By: Rob Benner
9BBB72AAA06549B...

Rob Benner, Secretary-Treasurer 1/8/2023

ADDENDUM

EMPLOYEE HANDBOOK & CURRENT STAFF ROSTER FOR THE PROPERTY

[to be added by Dev Corp]

SCHEDULE 1

DEVELOPER RESPONSIBILITY AND FEE ALLOCATION CHART

The total developer fee associated with the acquisition and redevelopment of **Property 1** shall be divided among the Partners as follows, subject to any adjustments allowed under the terms of the MOU.

Development Service	Developer Fee Available (per $1,000)	Fee Payable to Non-Profit Partner (or its Agent)	Fee Payable to Developer (or its assigns)
1. Perform feasibility analysis	$38.75	-	$38.75
2. Prepare financial model	$38.75	-	$38.75
3. Determine scope of work	$19.37	-	$19.37
4. Obtain site control	$94.50	$94.50	-
5. Obtain political support*[1]	$38.75	$38.75	-
6. Source and negotiate soft debt financing			
a. Source and negotiate seller note	$22.25	$22.25	-
b. Source and negotiate NV HIT	$44.50	$35.60	$8.90
c. Source and negotiate HOME funds	$22.25	-	$22.25
d. Source and negotiate federal grant	$33.38	-	$33.38
7. Obtain relocation plan	$3.87	-	$3.87
8. Obtain bond/tax credit allocations	$38.75	-	$38.75
9. Obtain building permits	$38.75	-	$38.75
10. Provide Predevelopment financing	$94.50	-	$94.50
11. Select property manager*[2]	$3.87	-	$3.87
12. Negotiate construction contract	$38.75	-	$38.75
13. Source and close tax-exempt bond financing			
a. Source tax-exempt bond financing	$9.69	$9.69	-
b. Close tax-exempt bond financing	$9.69	-	$9.69
14. Source and close LIHTC equity financing			
a. Source LIHTC equity	$9.69	$9.69	-
b. Close LIHTC equity	$9.69	-	$9.69
15. Provide guaranties	$133.24	-	$133.24
16. Source and Close construction financing			
a. Source construction financing	$47.25	$47.25	-
b. Close construction financing	$47.25	-	$47.25
17. Manage construction	$66.62	-	$66.62
18. Process construction draws	$37.80	-	$37.80
19. Market and rent up project	$19.37	-	$19.37
20. Convert to permanent financing	$31.00	-	$31.00
21. Asset management	$7.75	-	$7.75
Total	**$1,000.00**	**$257.72**	**$742.28**

[1] This item shall only apply to the extent the redevelopment of Property 1 materially requires local planning and zoning support, rezoning or other substantial measures requiring city council or similar approval or state subsidy (Qualified Allocation Plan revisions or direct subsidies) are necessary.

[2] In the event that Trades Council is serving as the Property Manager at Property 1, Non-Profit Partner (or its Agent) shall be entitled to 50% of this item.

SCHEDULE 1

DEVELOPER RESPONSIBILITY AND FEE ALLOCATION CHART (CONT.)

Any developer fee associated with the acquisition and redevelopment of **Property 2** and any Future Properties, shall be divided among the Partners in accordance with the schedule below, subject to any adjustments allowed under the terms of this MOU.

	Developer Fee Available (per $1,000)	Fee Payable to Non-Profit Partner (or its Agent)	Fee Payable to Developer (or its assigns)
1. Perform feasibility analysis	$40.31	-	$40.31
2. Prepare financial model	$40.31	-	$40.31
3. Determine scope of work	$20.15	-	$20.15
4. Obtain site control	$98.31	-	$98.31
5. Obtain political support*[3]	NA	NA	NA
6. Source and negotiate soft debt financing			
a. Source and negotiate seller note	NA	NA	NA
b. Source and negotiate NV HIT	$56.58	$45.26	$11.32
c. Source and negotiate HOME funds	$28.29	-	$28.29
d. Source and negotiate federal grant	$42.44	-	$42.44
7. Obtain relocation plan	$4.03	-	$4.03
8. Obtain bond/tax credit allocations	$40.31	-	$40.31
9. Obtain building permits	$40.31	-	$40.31
10. Provide Predevelopment financing	$98.31	-	$98.31
11. Select property manager	$4.03	-	$4.03
12. Negotiate construction contract	$40.31	-	$40.31
13. Source and close tax-exempt bond financing			
a. Source tax-exempt bond financing	$10.08	$10.08	-
b. Close tax-exempt bond financing	$10.08	-	$10.08
14. Source and close LIHTC equity financing			
a. Source LIHTC equity	$10.08	$10.08	-
b. Close LIHTC equity	$10.08	-	$10.08
15. Provide guaranties	$138.62	-	$138.62
16. Source and Close construction financing			
a. Source construction financing	$49.15	$49.15	-
b. Close construction financing	$49.15	-	$49.15
17. Manage construction	$69.31	-	$69.31
18. Process construction draws	$39.32	-	$39.32
19. Market and rent up project	$20.15	-	$20.15
20. Convert to permanent financing	$32.25	-	$32.25
21. Asset management	$8.06	-	$8.06
Total	**$1,000.00**	**$114.57**	**$885.43**

[3] This item shall only apply to the extent the redevelopment of Property 2, or any Future Properties materially requires local planning and zoning support, rezoning or other substantial measures requiring city council or similar approval or similar state subsidy (Qualified Allocation Plan revisions or direct subsidies) aree necessary.

EXHBIIT A:

DEVELOPMENT TIMELINE & CRITICAL DATES

[to be added by Developer]

EXHBIIT B:

PRELIMINARY CONSTRUCTION SCOPE

[to be added by Developer]

EXHBIIT C:

PRELIMINARY FINANCIAL PROJECTIONS

[to be added by Developer]

EXHBIIT D:

PRELIMINARY ORGANIZATIONAL CHART

[to be added by Developer]

EXHBIIT E:

PURCHASE & SALE LETTER OF INTENT

NON-BINDING LETTER OF INTENT
CONCERNING PROPOSED PURCHASE AND SALE

December 1, 2022

Via E-Mail
Rob Benner
Secretary-Treasurer
Northern Nevada Building & Construction Trades Council Development Corporation
1819 Hymer Ave, Suite 106
Sparks, NV 89431

RE: Acquisition of Carville Park Apartments in Reno, NV

Mr. Benner:

Please accept this letter as Canopy Acquisitions, LLC or its assigns' (collectively, "Canopy" or "Buyer") proposed terms to acquire the Property (defined below) under the terms described herein.

This Letter of Intent is not intended to be a binding contract but is intended only to provide the basis for negotiations for an enforceable Agreement to be negotiated hereafter by Canopy and you (the "Seller").

An outline of the proposed terms and conditions are as follows:

Property: The "Property":

Carville Park Apartments: the 52-unit (208-bed), ± 82,095 SF (± 69,966 NRSF), 100% subsidized Section 8 project, with an existing Section 8 HAP contract providing subsidies for up to 208 residents, currently serving very low-income and extremely low-income seniors, consisting of ten (10) residential buildings and one (1) leasing office, all two (2) stories, and 134 parking spaces, located on Carville Drive between Sutro Street and Arnold Drive in Reno Nevada, comprised of:

1244 Carville Dr., Reno, NV 89512: ± 82,095 SF (± 69,966 NRSF) (4.39 acres) multiple residential low-rise buildings and office space APN: 008-084-37; and

0 Arnold Dr., Reno, NV 89512: ±5,924 SF (0.136 acres) vacant land APN: 008-086-07.

Price: The Purchase Price shall be the fair market value of the Property as supported by a third party appraisal and mutually agreed to by the parties.

Earnest Money: Buyer will fund Ten Thousand and no/100 Dollars ($10,000.00) of Earnest Money within five (5) business days following the execution of the Purchase and Sale Agreement. At the expiration of the Feasibility Period, all Earnest Money will be non-refundable (absent the occurrence of a Return Event), but applicable to Purchase Price.

As used herein, the term "Return Event" means any of the following: (i) Seller's default under the definitive Purchase and Sale Agreement for the transaction or any termination of same as a result

of a casualty or condemnation; (ii) Buyer determining that the Property is impacted by any Recognized Environmental Condition, Historical Recognized Environmental Condition, or Controllable Recognized Environmental Condition, contains asbestos containing materials, mold, radon gas or lead based paint, or is otherwise not in compliance with applicable environmental laws; (iii) Buyer determining that title to the Property is not marketable or is otherwise burdened by liens, encumbrances or other conditions (such as encroachments or protrusions of improvements) which in Buyer's reasonable opinion impair the value of the Property or the Property's compliance with applicable laws and/or private restrictions burdening same, or (iv) the Property does not comply in any material respect, as determined by Buyer, with all current zoning and other laws without taking into account any so called grandfathering rights.

Feasibility Period: Buyer shall have a period of two-hundred seventy (270) days after the execution of a Purchase and Sale Agreement to complete its due diligence on the Property (the "Feasibility Period"); provided, that in the event Seller does not deliver to Buyer any due diligence materials requested by Buyer within five (5) business days of such request, the Feasibility Period shall be extended by the number of days following such fifth day until and including the day of delivery of such materials to Buyer.

Closing Date: Sixty (60) days after the expiration of the Feasibility Period (the "Closing Date").

Title Company: Ticor Title of Nevada - Attention: Luann Barnes

Title Work: Seller to provide within five (5) days after the Effective Date.

Survey: Seller will provide any existing ALTA and/or boundary surveys of the Property in its possession upon execution of this Letter of Intent. Buyer may procure at its own expense an updated ALTA survey (the "Survey").

Environmental Report: Seller to provide any existing "Phase I" and "Phase II" Environmental Reports in its possession. If Seller does not have an updated Phase I and/or Phase II, Buyer may, for its own benefit, procure updated Phase I and/or Phase II reports during the Feasibility Period, provided however, that Buyer shall not undertake a Phase II report without prior written notice to, and written consent of Seller, which consent shall not be unreasonably withheld, conditioned, or delayed.

Property Conditions Assessment: Seller to provide any Property Conditions Assessments "PCAs" in its possession. If Seller does not have an updated PCA, Buyer shall, for its own benefit, procure a PCA to be performed during the Feasibility Period.

Seller's Information: Upon the full execution of this Letter of Intent (such occurrence being the "Effective Date"), Seller shall promptly deliver to Buyer all pertinent materials currently in Seller's possession relative to the Property including but not limited to: aerials, surveys, architectural plans, engineering reports, topographic information, soils reports, appraisals, PCAs, historic rent rolls, insurance loss runs, historical financial statements, capital expenditure history, or any other such items in order to facilitate Buyer's due diligence of the Property – including but not limited to all reports or other documents that describe or relate to the environmental condition of the Property. See Schedule 1 for a preliminary list of due diligence material.

Costs & Expenses: Each party will pay for its own costs and expenses incurred in connection with the transaction contemplated by this Letter of Intent. Notwithstanding the immediately preceding sentence, in the

event of any litigation between the parties under this Letter of Intent, the prevailing party will be entitled to reasonable attorneys' fees and court costs through all trial and appellate levels.

Closing Costs: Seller shall pay for the appropriate title policy (the "Title Policy"), all transfer and or conveyance taxes, including but not limited to, documentary stamp taxes, deed recording fees, and any/all "rollback" taxes arising from the Property's use prior to Closing.

No Broker: Buyer and Seller each represent and warrant to each other that it is not represented by and has not entered into any binding contract or agreement with any broker regarding the proposed purchase and/or sale of the Property.

Exclusivity: Seller agrees that in order to induce Buyer to commit the resources, forego other potential opportunities, and incur the legal, accounting, and incidental expenses necessary to properly evaluate the acquisition of the Property, and to negotiate the terms of, and consummate the transaction contemplated hereby, that, after the date hereof, Seller and its respective officers, directors, employees and agents shall not initiate, solicit, encourage, directly or indirectly, or accept any offer or proposal, regarding the possible acquisition of the Property by any person or entity other than Buyer prior to the earlier of, (i) Buyer's written advice that it does not intend to pursue the acquisition, or (ii) expiration of the Feasibility Period.

Confidentiality: The parties will keep confidential the terms and conditions and existence of this Letter of Intent, the reports, studies, plans, information, documents and materials provided in connection with the transaction contemplated hereby and marked as confidential; provided, however, either party may disclose such terms and conditions (i) to their respective attorneys, accountants, lenders, prospective lenders, capital sources, partners, prospective partners, financing partners, prospective financing partners, contractors and architects who have a need to know such information, (ii) to the extent required by applicable law, and (iii) to the extent necessary to obtain any approvals, permits or financing required in order to consummate the transactions contemplated hereunder. The obligations of the parties shall not apply to information disclosed by third parties, except to the extent such disclosure is a result of such party's breach of this Letter of Intent. If the transaction contemplated hereby is not consummated, the parties agree to kept confidential all information obtained about the other party during its investigation or negotiations.

Seller hereby acknowledges that Buyer plans on pursuing state and federal tax credits, grants and other sources of financing which may require disclosure of certain terms and conditions of the proposed transactions, including this LOI, and that such disclosure shall not constitute a breach of confidentiality.

Definitive Agreement: The parties agree to use reasonable efforts to complete the negotiation and execution of the Purchase and Sale Agreement no later than thirty (30) days after the execution of this Letter of Intent. The Purchase and Sale Agreement shall incorporate the terms hereof and such other terms, representations, warranties, and covenants as are customary and as the parties shall reasonably require.

Governing Law: This Letter of Intent shall be construed pursuant to and governed by the laws of the State of Nevada (without giving effect to conflict of laws principles).

Notwithstanding anything contained herein to the contrary, except for the agreements identified herein and referred to above under "Costs & Expenses," "Exclusivity," "Confidentiality" and "Governing Law", the parties acknowledge and agree that neither party shall be legally bound to the other by reason of this Letter of Intent, nor shall any rights, liability, or

obligation (express or implied) be created hereby. The parties further acknowledge and agree that the current discussions are preliminary in nature and may be terminated at any time by either party without liability and are not intended to create a legally binding obligation or commitment on the part of either party with the exception of the "Costs & Expenses," "Exclusivity," "Confidentiality" and "Governing Law" clauses above. It shall be and remain in the sole discretion of either party whether or not to enter into the transactions contemplated by this Letter of Intent and neither party has any agreement (written or oral) between the parties regarding the transactions contemplated by this Letter of Intent. Neither the expenditure of funds by either party in reliance on this Letter of Intent nor part performance of any provision of this Letter of Intent by either party shall alter the forgoing provisions of this paragraph. The parties acknowledge that any definitive agreements may contain additional terms and provisions that are not contemplated by this Letter of Intent.

The parties acknowledge that they neither intend to enter, nor have they entered, into any agreement to negotiate definitive agreements pursuant to this Letter of Intent, and either party may, at any time prior to execution of such definitive agreements, propose different terms from those summarized herein or unilaterally terminate all negotiations pursuant to this Letter of Intent without any liability whatsoever to the other party.

Nothing contained in this proposal should be considered binding on either the Seller or Buyer. If the terms outlined above meet with your approval, please sign and return this Letter of Intent within five (5) days and Buyer shall prepare a Purchase and Sale Agreement for Seller's review.

Sincerely,

Victor Atkins

SCHEDULE 1

PRELIMINARY LIST OF SELLER DUE DILIGENCE MATERIAL

I. HISTORIC FINANCIALS

1.	Detailed general ledger for the last twelve (12) calendar months
2.	Monthly operating statements, in Excel, for the prior thirty-six (36) calendar months
3.	Capital Expenditure History including repairs to roofs, boilers, HVAC/chillers, or other major equipment costing $10,000 or more
4.	Schedule of replacements and capital for the prior twelve (12) calendar months.

II. PROPERTY OPERATIONS

1.	All utility bills for the prior twelve (12) calendar months, both electronic copies and in excel format (if available)
2.	Listing of utility vendors (including internet) with all account numbers and a phone number for each utility
3.	List of all current utility deposits (if any)
4.	Summary list and complete copies of all service contracts including term and cancellation provisions
5.	Current year property tax statement and status (protesting, etc.)
6.	Prior three (3) tax year property tax statements
7.	Any notice or correspondence with the appraisal district regarding changes to tax valuation and/or mill rate including notices of potential Rule B (if Arizona)
8.	Insurance Loss History for three years; Claim history and documents relating to the Flood and Umbrella Insurance Policies maintained for the Property
9.	All policies of insurance relating to the Property that are in force and all related documents including all endorsements and certificates
10.	Work order log for the prior twelve (12) months
11.	Copies of all business licenses and permits

III. STAFFING & LABOR RELATIONS

1.	Current staffing plan listing all employees including full name, position, contact information, base compensation, and union affiliation (if applicable) for every employee
2.	Current and complete copies of any collective bargaining agreements (“CBA”); including comprehensive list of employees currently covered under the CBA.
3.	Current copies of any collective bargaining agreements (“CBA”) currently being negotiated
4.	Report on Potential Employer Withdrawal Liability for the most recent calendar year; if either the report is not readily available or up-to-date, Seller agrees to promptly submit a formal request to the appropriate pension fund.
5.	All Grievances filed within the last calendar year

IV. ZONING, TITLE, INSPECTIONS, LITIGATION & LAND USE

1.	Existing and/or Historical Title Commitment Documents
2.	All Open governmental authority notices of building code, zoning, fire, pool, or health code violations

3.	Any notice or correspondence of an existing, proposed, or contemplated plan to widen, modify or realign any road or any eminent domain/condemnation proceeding that would affect the property
4.	Copies of fire inspection reports for the last year, Including Sprinkler System Tests, In unit fire extinguishers, common area fire extinguishers
5.	Listing of litigation, actions, proceedings, and investigations pending against the seller or property. List of any pending property tax litigation with all details
6.	Owner's title insurance policy, together with legible copies of all documents set forth therein as exceptions to title
7.	Copies of all Land Use Restrictive Agreements ("LURA")

V. PROPERTY & PROPERTY CONDITION

1.	All existing as-built architectural plans, concept plans, specifications, etc. (or diagrams if plans are unavailable), including AutoCAD files
2.	As-built survey (if available)
3.	Certified ALTA/ACSM survey/plot plan
4.	Personal property listing including shop equipment, tools, golf carts, fitness equipment and all other items necessary for the day-to-day operation of the property
5.	Copies of all warranties in effect for the Property and personal property
6.	All certificates of occupancy (if available)
7.	All existing engineering/property condition reports
8.	All existing environmental reports and soil tests
9.	All existing zoning reports
10.	All existing structural reports

VI. SECTION 8 HAP CONTRACT

1.	The HUD Section 8 HAP Contract covering the Property
2.	All correspondence from HUD related to the HAP Contract, for the last three (3) calendar years

EXHIBIT 5A

PRE-DEVELOPMENT TIMELINE

Development Timeline

Carville Park Apts

► *Development concept and pre-development activities*

► *Development site control, funding and closing*

Pre-Development

Acquisition

Partnership MOU Executed		January, 1 2023
PSA Effective Date	**	June, 15 2023
Target Closing Date	**	January, 15 2024
Contractual Closing Date	**	March, 1 2024

Zoning

SPD Zoning & Master Plan Amendment Submission		April, 4 2023
Planning Staff Meeting		April, 27 2023
Neighborhood Advisory Board (NAB) Presentation		June, 4 2023
Planning Commission Presentation		June, 6 2023
City Council ZoningApproval	**	July, 25 2023
Formal Zoning Approval	**	August, 9 2023

HUD MUTM

HUD MUTM Concept Meeting		February, 6 2023
RCS Finalized	**	June, 30 2023
MUTM Application Submission	**	July, 15 2023
HUD MUTM Formal Approval	**	December, 15 2023

Architecture

Architect Engaged		March, 21 2023
Permit Set Submission	**	September, 17 2023
Architectual Plan Review Complete	**	October, 17 2023
Building Permit Issued	**	November, 16 2023

Funding

HUD 221(d)(4)

HUD 221(d)(4) Initial Concept Call		May, 15 2023
HUD 221(d)(4) Application Submission	**	September, 1 2023
HUD 221(d)(4) Firm Commitment	**	January, 30 2024
Loan Closing and Disbursement	**	March, 1 2024

TE Bonds

Bond Application Submission	**	August, 26 2023
Inducement Certificate Issued	**	September, 29 2023
TEFRA Hearing	**	October, 31 2023
State board of finance approval	**	December, 7 2023
Funds deposited with Trustee	**	January, 10 2024
Initial Draw	**	January, 15 2024

HOME AHMLP

HOME AHMLP Application Submission		January, 9 2023
First Public Hearing		February, 14 2023
Second Public Hearing		March, 14 2023
Final Public Hearing		April, 11 2023
HOME AHMLP Formal Board Approval		May, 15 2023
HOME AHMLP Regional Planning Board Ratification	**	July, 30 2023

NIB

NIB Application Submission		June, 8 2023
NIB Application Review Complete	**	August, 7 2023
NIB Term Sheet Issued	**	August, 22 2023
NIB Formal Award	**	October, 6 2023

Equity

Equity Commitment Issued	**	September, 30 2023
Equity Investor Admission	**	February, 25 2024

Footnotes

** Denotes projected milestone

EXHIBIT 5B

CONSTRUCTION TIMELINE

Development Timeline

Carville Park Apts

► *Closing through construction completion*

► *Lease-up through stabilization and loan conversion*

Milestones

Closing / Investor Admission		January 2024
Stabilization	**	January 2026
Loan Conversion		January 2026
Final Equity Installment		August 2026
Compliance Period Start		January 2025
Cost Certification Complete		February 2026
8609s Issued		May 2026
Final Amended & Restated Tax Returns Complete		August 2026
Cost Certification Complete		February 2026
1st LIHTC Credit Year		2025
1st Full LIHTC Credit Year		2026

Construction

Project summary

Construction start	February 2024
Construction 50% complete	December 2024
Construction 75% complete	June 2025
Construction 100% complete	November 2025

Building delivery

1240 Carville Dr	December 2024
1242 Carville Dr	December 2024
1260 Carville Dr	December 2024
1258 Carville Dr	April 2025
1254 Carville Dr	April 2025
1252 Carville Dr	April 2025
1250 Carville Dr	August 2025
1248 Carville Dr	August 2025
1256 Carville Dr	October 2025
1246 Carville Dr	October 2025
Club House	October 2025

Lease-up

Relocation

Phase I residents relocated (temp) off-site	Jan 2024 - Jan 2025
Phase II residents relocated (temp) off-site	Jul 2024 - Apr 2025
Phase III residents relocated (temp) off-site	Jan 2025 - Sep 2025
Phase IV residents relocated (temp) off-site	Mar 2025 - Nov 2025

Qualified occupancy

1240 Carville Dr	January 2025
1242 Carville Dr	January 2025
1260 Carville Dr	January 2025
1258 Carville Dr	May 2025
1254 Carville Dr	May 2025
1252 Carville Dr	May 2025
1250 Carville Dr	September 2025
1248 Carville Dr	September 2025
1256 Carville Dr	November 2025
1246 Carville Dr	December 2025
Club House	December 2025

Footnotes

** Stabilization: 90%+ Physical Occupancy for three consecutive months

EXHIBIT 7

USEFUL LIFE EXHIBIT

See Depreciation Schedule on page 18 of Exhibit 8F - Financial Projections

EXHIBIT 8A

AUDITED FINANCIAL STATEMENTS

For the fiscal year ending March 31, 2022.

NORTHERN NEVADA BUILDING & CONSTRUCTION
TRADE COUNCIL DEVELOPMENT CORPORATION
dba CARVILLE PARK APARTMENTS
HUD PROJECT NO. 125-35077-NP
FINANCIAL STATEMENTS
AND SUPPLEMENTARY INFORMATION
MARCH 31, 2022

NORTHERN NEVADA BUILDING & CONSTRUCTION
TRADE COUNCIL DEVELOPMENT CORPORATION
dba CARVILLE PARK APARTMENTS
HUD PROJECT NO. 125-35077-NP
FINANCIAL STATEMENTS
AND SUPPLEMENTARY INFORMATION
YEAR ENDED MARCH 31, 2022

TABLE OF CONTENTS

	Page No.
INDEPENDENT AUDITOR'S REPORT	1 - 2
FINANCIAL STATEMENTS	
Statement of Financial Position	3
Statement of Activities	4
Statement of Cash Flows	5 - 6
Notes to Financial Statements	7 - 14
REPORTS REQUIRED BY THE UNIFORM GUIDANCE	
Schedule of Expenditures of Federal Awards	16
INDEPENDENT AUDITOR'S REPORT ON INTERNAL CONTROL OVER FINANCIAL REPORTING AND ON COMPLIANCE AND OTHER MATTERS BASED ON AN AUDIT OF FINANCIAL STATEMENTS PERFORMED IN ACCORDANCE WITH *GOVERNMENT AUDITING STANDARDS*	17 - 18
INDEPENDENT AUDITOR'S REPORT ON COMPLIANCE FOR EACH MAJOR PROGRAM AND ON INTERNAL CONTROL OVER COMPLIANCE REQUIRED BY THE UNIFORM GUIDANCE	19 - 20
SCHEDULE OF FINDINGS AND QUESTIONED COSTS	21
CERTIFICATE OF PROJECT OWNER	22
CERTIFICATE OF MANAGING AGENT	23
COMMUNICATIONS WITH GOVERNANCE	25 - 27

Jonathan S. Steele, CPA CGMA

Steele
Certified Public Accountants

Vanessa L. Davis, CPA CGMA

INDEPENDENT AUDITOR'S REPORT

To the Board of Directors
Northern Nevada Building & Construction
Trade Council Development Corporation
dba Carville Park Apartment
HUD Project No. 125-35077-NP
Reno, Nevada

Report on the Audit of the Financial Statements

Opinion

We have audited the accompanying financial statements of Northern Nevada Building & Construction Trade Council Development Corporation (a nonprofit organization), dba Carville Park Apartments, HUD Project No. 125-35077-NP, which comprise the statement of financial position as of March 31, 2022, and the related statements of activities and cash flows for the year then ended, and the related notes to the financial statements.

In our opinion, the financial statements present fairly, in all material respects, the financial position of Northern Nevada Building & Construction Trade Council Development Corporation as of March 31, 2022, and the changes in net assets and its cash flows for the year then ended in accordance with accounting principles generally accepted in the United States of America.

Basis for Opinion

We conducted our audit in accordance with auditing standards generally accepted in the United States of America and the standards applicable to financial audits contained in *Government Auditing Standards*, issued by the Comptroller General of the United States. Our responsibilities under those standards are further described in the Auditor's Responsibilities for the Audit of the Financial Statements section of our report. We are required to be independent of Northern Nevada Building & Construction Trade Council Development Corporation and to meet our other ethical responsibilities, in accordance with the relevant ethical requirements relating to our audit. We believe that the audit evidence we have obtained is sufficient and appropriate to provide a basis for our audit opinions.

Responsibilities of Management for the Financial Statements

Management is responsible for the preparation and fair presentation of these financial statements in accordance with accounting principles generally accepted in the United States of America , and for the design, implementation, and maintenance of internal control relevant to the preparation and fair presentation of financial statements that are free from material misstatement, whether due to fraud or error.

611 N. Nevada Street
Carson City, Nevada 89703
Phone: (775) 882-7198
Fax: (775) 883-4346

Members of: CPA Connect
Nevada Society of Certified Public Accountants
American Institute of Certified Public Accountants
Affordable Housing Association of Certified Public Accountants

In preparing the financial statements, management is required to evaluate whether there are conditions or events considered in the aggregate, that raise substantial doubt about Northern Nevada Building & Construction Trade Council Development Corporation's ability to continue as a going concern within one year after the date that the financial statements are available to be issued.

Auditor's Responsibility

Our objectives are to obtain reasonable assurance about whether the financial statements as a whole are free from material misstatement, whether due to fraud or error, and to issue an auditor's report that includes our opinion. Reasonable assurance is a high level of assurance but is not absolute assurance and therefore is not a guarantee that an audit conducted in accordance with generally accepted auditing standards and *Government Auditing Standards* will always detect a material misstatement when it exists. The risk of not detecting a material misstatement resulting from fraud is higher than for one resulting from error, as fraud may involve collusion, forgery, intentional omissions, misrepresentations, or the override of internal control. Misstatements are considered material if there is a substantial likelihood that, individually or in the aggregate, they would influence the judgment made by a reasonable user based on the financial statements.

In performing an audit in accordance with generally accepted auditing standards and *Government Auditing Standards,* we:

- Exercise professional judgment and maintain professional skepticism throughout the audit.
- Identify and assess the risks of material misstatement of the financial statements, whether due to fraud or error, and design and perform audit procedures responsive to those risks. Such procedures include examining, on a test basis, evidence regarding the amounts and disclosures in the financial statements.
- Obtain an understanding of internal control relevant to the audit in order to design audit procedures that are appropriate in the circumstances, but not for the purpose of expressing an opinion on the effectiveness of Northern Nevada Building & Construction Trade Council Development Corporation's internal control. Accordingly, no such opinion is expressed.
- Evaluate the appropriateness of accounting policies used and the reasonableness of significant accounting estimates made by management, as well as evaluate the overall presentation of the financial statements.
- Conclude whether, in our judgment, there are conditions or events, considered in the aggregate, that raise substantial doubt about Northern Nevada Building & Construction Trade Council Development Corporation's ability to continue as a going concern for a reasonable period of time.

We are required to communicate with those charged with governance regarding, among other matters, the planned scope and timing of the audit, significant audit findings, and certain internal control-related matters that we identified during the audit.

Supplementary Information

Our audit was conducted for the purpose of forming an opinion on the financial statements as a whole. The accompanying schedule of expenditures of federal awards, as required by Title 2 U.S. *Code of Federal Regulations* Part 200, *Uniform Administrative Requirements, Cost*

Principles, and Audit Requirements for Federal Awards, is presented for purposes of additional analysis and is not a required part of the financial statements. Such information is the responsibility of management and was derived from and relates directly to the underlying accounting and other records used to prepare the financial statements. The information has been subjected to the auditing procedures applied in the audit of the financial statements and certain additional procedures, including comparing and reconciling such information directly to the underlying accounting and other records used to prepare the financial statements or to the financial statements themselves, and other additional procedures in accordance with auditing standards generally accepted in the United States of America. In our opinion, the information is fairly stated in all material respects in relation to the financial statements as a whole.

Other Reporting Required by Government Auditing Standards

In accordance with *Government Auditing Standards*, we have also issued our report dated December 9, 2022, on our consideration of Northern Nevada Building & Construction Trade Council Development Corporation, dba Carville Park Apartments' internal control over financial reporting and on our tests of its compliance with certain provisions of laws, regulations, contracts, and grant agreements and other matters. The purpose of that report is to describe the scope of our testing of internal control over financial reporting and compliance and the results of that testing, and not to provide an opinion on the effectiveness of Northern Nevada Building & Construction Trade Council Development Corporation's internal control over financial reporting or on compliance. That report is an integral part of an audit performed in accordance with *Government Auditing Standards* in considering Northern Nevada Building & Construction Trade Council Development Corporation's internal control over financial reporting and compliance.

Stuhr & Associates, LLC

Carson City, Nevada
December 9, 2022

Northern Nevada Building & Construction
Trade Council Development Corporation
dba Carville Park Apartments
Statement of Financial Position
March 31, 2022

ASSETS		
CURRENT ASSETS		
Cash and Equivalents	$	346,743
Accounts Receivable (Net of Allowance for Doubtful Accounts of $3,860)		20,708
Prepaid Expenses		42,011
Due from Related Party		63,730
TOTAL CURRENT ASSETS		473,192
PROPERTY AND EQUIPMENT		
Furniture and Equipment		897,761
Buildings and Improvements		2,601,484
Land and Improvements		1,292,464
		4,791,709
Less Accumulated Depreciation		(3,929,021)
TOTAL PROPERTY AND EQUIPMENT		862,688
OTHER ASSETS		
Tenant Deposits Held in Trust		64,778
Certificates of Deposit		-
Reserve for Replacements		358,313
TOTAL OTHER ASSETS		423,091
TOTAL ASSETS	$	1,758,971
LIABILITIES AND NET ASSETS		
CURRENT LIABILITIES		
Accounts Payable	$	44,712
Accrued Liabilities		633
Tenant Security Deposits		33,286
Prepaid Rents		7,799
TOTAL CURRENT LIABILITIES/TOTAL LIABILITIES		86,430
NET ASSETS		
Net Assets without Donor Restrictions		1,672,541
Net Assets with Donor Restrictions		-
TOTAL NET ASSETS		1,672,541
TOTAL LIABILITIES AND NET ASSETS	$	1,758,971

See Accompanying Independent Auditor's Report & Notes to Financial Statements

Northern Nevada Building & Construction
Trade Council Development Corporation
dba Carville Park Apartments
Statement of Activities
For the Year Ended March 31, 2022

REVENUES		
Rental	$	1,464,089
Interest Income		364
Tenant Charges		9,749
Laundry, Vending, and Miscellaneous		39,131
TOTAL REVENUE		1,513,333
EXPENSES		
Program Services		
Administrative		125,821
Utilities		182,366
Operating and Maintenance		447,670
Taxes and Insurance		142,053
Insurance and Employee Benefits		80,458
Depreciation		89,339
		1,067,707
Supporting Activities		
Management Fees		117,312
Office Salaries		78,050
Office Expenses		33,427
		228,789
TOTAL EXPENSES		1,296,496
CHANGE IN NET ASSETS WITHOUT DONOR RESTRICTIONS		216,837
NET ASSETS WITHOUT DONOR RESTRICTIONS, MARCH 31, 2021		1,455,704
NET ASSETS WITHOUT DONOR RESTRICTIONS, MARCH 31, 2022	$	1,672,541

See Accompanying Independent Auditor's Report & Notes to Financial Statements

Northern Nevada Building & Construction
Trade Council Development Corporation
dba Carville Park Apartments
Statement of Cash Flows
For the Year Ended March 31, 2022

CASH FLOWS FROM OPERATING ACTIVITIES		
Rental Receipts	$	1,455,460
Interest Receipts		364
Other Receipts		51,275
Administrative Expenses Paid		(75,302)
Management Fees Paid		(117,312)
Utilities Expenses Paid		(182,366)
Salaries and Wages Paid		(295,908)
Operating and Maintenance Expenses Paid		(283,909)
Real Estate Taxes Paid		(64,627)
Property Insurance Paid		(47,315)
Miscellaneous Taxes and Insurance Paid		(109,551)
NET CASH USED BY OPERATING ACTIVITIES		330,809
CASH FLOWS FROM INVESTING ACTIVITIES		
Redemption of CD		27,203
Acquisition of Property and Equipment		(7,529)
NET CASH PROVIDED BY INVESTING ACTIVITIES		19,674
NET INCREASE (DECREASE) IN CASH AND CASH EQUIVALENTS		350,483
CASH, CASH EQUIVALENTS AND RESTRICTED CASH MARCH 31, 2021		419,351
CASH, CASH EQUIVALENTS AND RESTRICTED CASH MARCH 31, 2022	$	769,834

See Accompanying Independent Auditor's Report & Notes to Financial Statements

Northern Nevada Building & Construction
Trade Council Development Corporation
dba Carville Park Apartments
Statement of Cash Flows
For the Year Ended March 31, 2022

RECONCILIATION OF CHANGE IN NET ASSETS TO NET CASH USED BY OPERATING ACTIVITIES		
Decrease in Net Assets	$	216,837
Adjustments to Reconcile Increase (Decrease) in Net Assets to Net Cash Used By Operating Activities		
Depreciation Expense		89,339
(Increase) decrease in:		
Accounts Receivable		(7,645)
Prepaid Expenses		(3,656)
(Decrease) increase in:		
Accounts Payable		32,889
Accrued Liabilities		(52)
Prepaid Rents		701
Tenant Security Deposits		2,396
NET CASH USED BY OPERATING ACTIVITIES	$	330,809

Northern Nevada Building & Construction
Trade Council Development Corporation
dba Carville Park Apartments
Notes to Financial Statements
March 31, 2022

NOTE 1 – SUMMARY OF SIGNIFICANT ACCOUNTING POLICIES

1. Business Activity

   The Corporation was formed as a non-profit corporation under the laws of the State of Nevada on April 6, 1979. It was organized to construct, own, and operate a 208-unit rental apartment project in Reno, Nevada, knows as Carville Park Apartments.

   The Project is regulated by the U.S. Department of Housing and Urban Development (HUD) as to rent charges and operating methods. Lower rental charges to tenants are recovered by the Project through rent subsidies provided by HUD. The Section 8 program is a major HUD program.

2. Accounting Methods and Revenue Recognition

   The Project's primary revenue stream is rent charges for residential units under leases with durations of less than one year. The Project records revenue for such leases at gross potential rent as prescribed by HUD. The rental value of vacancies and other concessions are stated separately to present net rental income on the accrual basis. Subsidy revenue for low-income eligible tenants is provided under a Section 8 housing assistance payment contract. This contract requires tenants to contribute a portion of the contract rent based on formulas prescribed by the Department of Housing and Urban Development (HUD). The difference from the calculated subsidy and the contract rent is paid by the HUD. The current contract expires on October 31, 2023.

   Subsidy income is considered part of the lease and is not considered a contribution under ASC 958. This standard indicates that government payments to specifically identified participants are to be considered exchange transactions and potentially subject to ASC 606. The Project believes that both rental and subsidy income streams are exempted from compliance with ASC 606 due to their inclusion under current and future lease standards. Revenue streams subject to ASC 606 include: laundry, vending, pet and parking fees as well as damages. Such fees are ancillary to the lease process and are recognized as revenue at the point in time such fees are incurred.

3. Classification of Net Assets

   Net assets of the Project are classified based on the presence or absence of donor-imposed restrictions. Net assets are comprised of two groups as follows:

   Net Assets without Donor Restrictions – Amounts that are not subject to usage restrictions based on donor-imposed requirements. This class also includes assets previously restricted where restrictions have been met.

NOTE 1 - SUMMARY OF SIGNIFICANT ACCOUNTING POLICIES (CONTINUED)

3. Classification of Net Assets (Continued)

Net assets with Donor Restrictions – Assets subject to usage limitations based on donor-imposed or grantor restrictions. These restrictions may be temporary or may be based on a particular use. Restrictions may be met by the passage of time or by actions of the Project. Certain restrictions may need to be maintained in perpetuity.

Earnings related to restricted net assets will be included in net assets without donor-restrictions unless otherwise specifically required to be included in donor-restricted net assets by the donor or by applicable state law.

The Project does not interpret the guidance in the standard to include amounts restricted by HUD as donor-restricted. The project believes that these amounts do not meet the spirit of the standard for such a classification or is there any industry standard indicating that others will treat these assets as donor-restricted.

All net assets of the Project at March 31, 2022 were considered to be net assets without donor restrictions.

4. Property and Equipment

Property and equipment are carried at cost or, if donated, at the approximate fair value at the date of donation. Fixed asset acquisitions in excess of $500 are capitalized and depreciation is provided using the straight-line method over the estimated useful lives of the buildings and related land improvements (15 – 40 years) and furnishings and equipment (5 – 7 years). Depreciation expense for the year ended March 31, 2022, was $89,339.

5. Cash and Cash Equivalents

For purposes of the Statement of Cash Flows, the Project considers all unrestricted highly liquid investments purchased with original maturities of three months or less to be cash equivalents. At March 31, 2022, there were no cash equivalents.

Restricted cash consists of Tenant security deposits held in trust and reserves for replacements.

NOTE 1 – SUMMARY OF SIGNIFICANT ACCOUNTING POLICIES (CONTINUED)

6. Estimates

   The preparation of financial statements in conformity with generally accepted accounting principles requires management to make estimates and assumptions that affect the reported amounts of assets and liabilities and disclosure of contingent assets and liabilities at the date of the financial statements and the reported amounts of revenue and expenses during the reporting period. Actual results could differ from those estimates.

7. Investments

   Investments in marketable securities with readily determinable fair values and all investments in debt securities are reported at their fair values in the statements of financial position. Unrealized gains and losses are included in the statement of activities.

8. Concentrations of Credit Risk

   Financial instruments that potentially subject the Project to concentrations of credit risk consist principally of cash in banks, investment accounts, and tenant accounts receivable.

   The Project has funds in credit union accounts which are insured by the National Credit Union Association (NCUA) up to $250,000. On March 31, 2022, the Project's credit union account balances exceeded the NCUA insured balance by $161,371.

   The Project maintains its reserve funds in investment institutions. The investments that the Project holds consist of money market funds. The funds are insured by the Securities Investor Protection Corporation for the amount invested in the event of fraud, theft, or other such deceptive activity.

   Concentrations of credit risk with respect to tenant accounts receivable are limited because all tenants are required to pay their rent monthly on the first of the month. However, since all of the Project's tenants live and work in the Northern Nevada area, the Project's ability to collect tenant accounts receivable may be affected by economic fluctuations in that geographic area.

   The Project's primary asset is a 208-unit apartment project. The Project's operations are concentrated in the multifamily real estate market. In addition, the Project operates in a heavily regulated environment. The operations of the Project are subject to the administrative directives, rules and regulations of federal, state and local regulatory agencies, including, but not limited to, HUD. Such administrative directives, rules and regulations are subject to change by an act of congress or an administrative change mandated by HUD. Such changes may occur with little notice or inadequate funding to pay for the related cost, including the additional administrative burden, to comply with a change.

NOTE 1 - SUMMARY OF SIGNIFICANT ACCOUNTING POLICIES (CONTINUED)

9. Bad Debts

   Uncollectible accounts receivable related to tenant rents are charged directly against operations when they are determined to be uncollectible. Use of this method does not result in a material difference from the valuation method required by generally accepted accounting principles.

   Occasionally, the tenant's financial condition changes subsequent to the receipt of the HUD Subsidy payment. When that occurs, the tenant enters into a repayment contract with the Project for the overpayment. Payments are recorded as rent income when received and reported to HUD, who then reduces the subsidy payment for that tenant by the amount received. However, those payment are only collectible after the tenant's normal rent and as long as the tenant remains a tenant. For that reason, the collectability of those particular contract receivables is in question. To that end the entire balance related to the repayment agreements at March 31, 2022, of $3,890, have been reserved against and included in an allowance for doubtful accounts.

10. Impairment of Long-Loved Assets

    The Organization reviews long-lived assets, including property and equipment and intangible assets, for impairment whenever events or changes in business circumstances indicate that the carrying amount of an asset may not be fully recoverable. An impairment loss would be recognized when the estimated future cash flows from the use of the asset are less than the carrying amount of that asset. To date, there have been no such losses.

11. Advertising and Marketing

    Advertising and marketing costs are expensed as incurred. There was no advertising expense incurred for the year ended March 31, 2022.

12. Income Taxes

    The Project is a nonprofit corporation that is exempt from federal income taxes under Section 501(c)(3) of the Internal Revenue Code. Accordingly, no liability for federal income taxes has been provided in the financial statements. It is the Project's tax position that it has not engaged in activities that would jeopardize its exempt status nor has it engaged in activities that would result in unrelated business income tax. The Project's Forms 990, *Return of Organization Exempt from Income Tax*, for the tax years ending 2020, 2021 and 2022 are subject to examination by the IRS, generally for three years after they were filed.

NOTE 1 - SUMMARY OF SIGNIFICANT ACCOUNTING POLICIES (CONTINUED)

13. Subsequent Events

In preparing these financial statements, the Project has evaluated events and transactions for potential recognition or disclosure through December 9, 2022, the date the financial statements were available to be issued. Subsequent events after that date have not been evaluated.

NOTE 2 – ALLOWABLE DISTRIBUTIONS

In accordance with HUD Handbook 4370.2 REV-1, CHG-1, *Financial Operations and Accounting Procedures for Insured Multifamily Projects,* page 2 – 12, distributions to owners are not permitted on non-profit projects. For the year ended March 31, 2022, there were no distributions made.

NOTE 3 – CASH, RESTRICTED DEPOSITS AND EQUIVALENTS

The balance in cash, cash equivalents, restricted deposits and restricted deposit equivalents consists of the following:

Operating Cash	$ 346,743
Restricted Deposits - Security Deposits	64,778
Restricted Deposits - Reserve for Replacement	358,313
Total Cash, Restricted Cash and Equivalents	$ 769,834

NOTE 4 – LIQUIDITY

At March 31, 2022, the Project has $398,943 cash and equivalents available to meet needs for general expenditures consisting of cash of $378,335 and $20,708 of accounts receivable. None of the financial assets are subject to donor or other contractual restrictions. Accordingly, all such funds are available to meet the cash needs of the project in the next 12 months. In addition, the Project may maintain funds in a reserve for replacements. These funds are used for the benefit of the tenants and/or Project. Such funds are not considered by the Project to have donor-restrictions.

The Project manages its liquidity by developing and adopting annual operating budgets that provide sufficient funds for general expenditures in meeting its liabilities and other obligations as they become due. Cash needs of the Project are expected to be met on a monthly basis from the rents of project units. In general, the Project maintains sufficient financial assets on hand to meet 30 days' worth of normal operating expenses.

NOTE 5 – FUNCTIONAL EXPENSES

The Project provides low-income housing to its tenants. The cost of providing program services and supporting activities has been summarized on a functional basis in the table below. Expenses directly attributable to a specific functional activity of the Project are reported as expenses of those functional activities. Allocations of expenses were made on a direct allocation basis.

FASSUB Line Items	Program Services Rental Operations	Supporting Activities Management and General	Total Expenses
Payroll and benefits	$ 298,263	$ 78,050	$ 376,313
Administrative	52,998	33,427	86,425
Management fee	-	117,312	117,312
Utilities	182,366	-	182,366
Repairs and maintenance	274,560	-	274,560
Taxes and insurance	142,054	-	142,054
Other	28,127	-	28,127
Depreciation	89,339	-	89,339
Totals	$ 1,067,707	$ 228,789	$ 1,296,496

NOTE 6 – RELATED PARTY TRANSACTIONS

Transactions involving related parties cannot be presumed to be carried out on an arm's-length basis. Except for routine transactions, it is generally not possible to determine whether a particular transaction would have taken place if the parties had not been related or, assuming it would have taken place, what the terms and manner of settlement would have been.

Effective November 1, 1987, management of the Project was provided by the Building and Construction Trades Council of Northern Nevada, a non-profit corporation which elects the Board of Directors of the Northern Nevada Building & Construction Trade Council Development Corporation, dba Carville Park Apartments. The management fee is $47 per unit per month for a total paid of $117,312 during the year ended March 31, 2022.

During the 2008 and 2009 fiscal years, the owners placed the property up for sale. During those two years, $72,630 was paid by the Project for various costs associated with the sale. These expenditures are an entity expense not a project expense and, as such, constitute an unauthorized distribution to the Project Owner. Therefore, the Owner is required to reimburse the Project for these expenditures. The amount is recorded as due from related party in the statement of financial position. During the year ended March 31, 2022, no payments were made on this receivable, leaving a balance due of $63,730.

NOTE 7 – PENSION CONTRIBUTIONS

In connection with its collective bargaining agreement with the Communication Workers of America, AFL-CIO, the company participates with other companies in the communication industry in a defined benefit pension plan. The plan covers all of the company's employees who are members of the Communication Workers of America Union. The pension contribution expense for the year ended March 31, 2022, was $29,499.

NOTE 8 – HOUSING ASSISTANCE PAYMENTS

Pursuant to Section 8 of Title II of the United States Housing Act of 1973, as amended, rents are subsidized by governmental payments through a housing assistance contract between the United States Department of Housing and Urban Development (HUD) and the Organization. The Partnership receives subsidies for 208 apartments which are rented to qualified low and very low income families in an amount which equals the difference between the Contract Rent, as determined by HUD, and 30% of the tenant's family income. The contract expires October 31, 2023.

In addition, the HAP contract provides that the Corporation is entitled to Section 8 Subsidies in the amount of 80% of the Contract Rents for vacant apartments for a period not to exceed thirty days. Housing assistance payments received totaled $965,151 for the year ended March 31, 2022.

As a result of the economic impact of the COVID-19 global pandemic, the United Stated Department of Housing and Urban Development (HUD) provided additional funding through the COVID-19 Supplemental Payment (CSP) program. The Organization received an additional $31,810 in additional housing assistance through this program.

NOTE 9 – LEASE TRANSACTIONS

The Organization entered into a five year lease agreement, commencing October 1, 2018, for the use of a copy systems for $57 per month. The lease also provides for sales tax and per copy charges which vary according to usage in addition to the monthly fee. The lease expense amounted to $2,612 for the year ended March 31, 2022.

NOTE 9 – LEASE TRANSACTIONS (CONTINUED)

Future obligations over the terms of the operating lease are as follows:

Year Ending March 31,	
2022	$ 2,612
2023	2,612
2024	2,612
2025	-
2026 and Thereafter	-
	$ 7,836

Northern Nevada Building & Construction
Trade Council Development Corporation
dba Carville Park apartments
March 31, 2022

REPORTS REQUIRED BY THE UNIFORM GUIDANCE

Northern Nevada Building & Construction
Trade Council Development Corporation
dba Carville Park Apartments
Schedule of Expenditures of Federal Awards
For the Year ended March 31, 2022

FEDERAL GRANTOR/PASS-THROUGH GRANTOR/PROGRAM TITLE	FEDERAL CFDA NUMBER	FEDERAL EXPENDITURES
U.S. Department of Housing and Urban Development		
Section 8 Housing Assistance Payments	14.195	$ 968,608
COVID-19 Supplemental Payment (CSP) Request	14.195	31,810
Total Expenditures of Federal Awards		$ 1,000,418

Note 1 – Basis of Presentation

The accompanying schedule of expenditures of federal awards (the Schedule) includes the federal award activity of Northern Nevada Building & Construction Trade Council Development Corporation, dba Carville Park Apartments, HUD Project No. 125-35077-NP, under programs of the federal government for the year ended March 31, 2022. The information in this Schedule is presented in accordance with the requirements of Title 2 U.S. *Code of Federal Regulations* Part 200, *Uniform Administrative Requirements, Cost Principles, and Audit Requirements for Federal Awards* (Uniform Guidance). Because the Schedule presents only a selected portion of the operations of Northern Nevada Building & Construction Trade Council Development Corporation, it is not intended to and does not present the financial position, changes in net assets, or cash flows of Northern Nevada Building & Construction Trade Council Development Corporation.

Note 2 – Summary of Significant Accounting Policies

A. Expenditures reported on the schedule are reported on the accrual basis of accounting. Such expenditures are recognized following the cost principles contained in the Uniform Guidance, wherein certain types of expenditures are not allowable or are limited as to reimbursement.

B. The Project did not receive Federal Financial Assistance in the form of loans or loan guarantees, or in the form of endowment funds.

C. The schedule does not include matching expenditures.

D. Pass-through entity identifying numbers are presented where available.

Jonathan S. Steele, CPA CGMA

Steele
Certified Public Accountants

Vanessa L. Davis, CPA CGMA

INDEPENDENT AUDITOR'S REPORT ON INTERNAL CONTROL OVER FINANCIAL REPORTING AND ON COMPLIANCE AND OTHER MATTERS BASED ON AN AUDIT OF FINANCIAL STATEMENTS PERFORMED IN ACCORDANCE WITH *GOVERNMENT AUDITING STANDARDS*

To the Board of Directors of
Northern Nevada building & Construction
Trade Council Development Corporation
dba Carville Park Apartment
HUD Project No. 125-35077-NP
Reno, Nevada

We have audited, in accordance with the auditing standards generally accepted in the United States of America and the standards applicable to Financial audits contained in *Government Auditing Standards* issued by the Comptroller General of the United States, the financial statements of Northern Nevada Building & Construction Trade Council Development Corporation (a nonprofit organization), dba Carville Park Apartment, HUD Project No. 125-35077-NP, which comprise the statement of financial position as of March 31, 2022, and the related statements of activities and cash flows for the year then ended, and the related notes to the financial statements, and have issued our report thereon dated December 9, 2022.

Internal Control over Financial Reporting

In planning and performing our audit of the financial statements, we considered Northern Nevada Building & Construction Trade Council Development Corporation's internal control over financial reporting (internal control) to determine the audit procedures that are appropriate in the circumstances for the purpose of expressing our opinion on the financial statements, but not for the purpose of expressing an opinion on the effectiveness of Northern Nevada Building & Construction Trade Council Development Corporation's internal control. Accordingly, we do not express an opinion on the effectiveness of Northern Nevada Building & Construction Trade Council Development Corporation's internal control.

A *deficiency in internal control* exists when the design or operation of a control does not allow management or employees, in the normal course of performing their assigned functions, to prevent, or detect and correct, misstatements on a timely basis. A *material weakness* is a deficiency, or a combination of deficiencies, in internal control, such that there is a reasonable possibility that a material misstatement of the entity's financial statements will not be prevented or detected and corrected on a timely basis. A *significant deficiency* is a deficiency, or a combination of deficiencies, in internal control that is less severe than a material weakness, yet important enough to merit attention by those charged with governance.

611 N. Nevada Street
Carson City, Nevada 89703
Phone: (775) 882-7198
Fax: (775) 883-4346

Members of: CPA Connect
Nevada Society of Certified Public Accountants
American Institute of Certified Public Accountants
Affordable Housing Association of Certified Public Accountants

Our consideration of internal control was for the limited purpose described in the first paragraph of this section and was not designed to identify all deficiencies in internal control that might be material weaknesses or significant deficiencies in internal control that we consider to be material weaknesses. However, material weaknesses may exist that have not been identifies.

Compliance and Other Matters

As part of obtaining reasonable assurance about whether Northern Nevada Building & Construction Trade Council Development Corporation's financial statements are free from material misstatement, we performed tests of its compliance with certain provisions of laws, regulations, contracts, and grant agreements, noncompliance with which could have a direct and material effect on the determination of financial statement amounts. However, providing an opinion on compliance with those provisions was not an objective of our audit, and accordingly, we do not express such an opinion. The results of our tests disclosed no instances of noncompliance or other matters that are required to be reported under *Government Auditing Standards.*

Purpose of this Report

The purpose of this report is solely to describe the scope of our testing of internal control and compliance and the results of that testing, and not to provide an opinion on the effectiveness of the organization's internal control or on compliance. This report is an integral part of an audit performed in accordance with *Government Auditing Standards* in considering the organization's internal control and compliance, Accordingly, this communication is not suitable for any other purpose.

Stule : Associates, inc

Carson City, Nevada
December 9, 2022

Jonathan S. Steele, CPA CGMA

Steele
Certified Public Accountants

Vanessa L. Davis, CPA CGMA

INDEPENDENT AUDITOR'S REPORT ON COMPLIANCE FOR EACH MAJOR PROGRAM AND ON INTERNAL CONTROL OVER COMPLIANCE REQUIRED BY THE UNIFORM GUIDANCE

To the Board of Directors of
Northern Nevada Building & Construction
Trade Council Development Corporation
dba Carville Park Apartments
HUD Project No. 125-35077-NP
Reno, Nevada

Report on Compliance for Each Major Federal Program

Opinion on Each Major Federal Program

We have audited Northern Nevada Building & Construction Trade Council Development Corporation, dba Carville Park Apartments' compliance with the types of compliance requirements described in the *OMB Compliance Supplement* that could have a direct and material effect on each of Northern Nevada Building & Construction Trade Council Development Corporation's major federal programs for the year ended March 31, 2022. Northern Nevada Building & Construction Trade Council Development Corporation's major federal programs are identified in the summary of auditor's results section of the accompanying schedule of findings and questioned costs.

In our opinion, Northern Nevada Building & Construction Trade Council Development Corporation complied, in all material respects, with the types of compliance requirements referred to above that could have a direct and material effect on each of its major federal programs for the year ended March 31, 2022.

Basis for Opinion on Each Major Federal Program

We conducted our audit of compliance in accordance with auditing standards generally accepted in the United States of America; the standards applicable to financial audits contained in *Government Auditing Standards*, issued by the Comptroller General of the United States, and the audit requirements of Title 2 U.S. *Code of Federal Regulations* Part 200, *Uniform Administrative Requirements, Cost Principles, and Audit Requirements for Federal Awards* (Uniform Guidance). Our responsibilities under those standards and the Uniform Guidance are further described in the Auditor's Responsibilities for the Audit of Compliance section of our report.

We are required to be independent of Northern Nevada Building & Construction Trade Council Development Corporation and to meet our other ethical responsibilities, in accordance with relevant ethical requirements relating to our audit. We believe that the audit evidence we have obtained is sufficient and appropriate to provide a basis for our opinion on compliance for each major federal program. Our audit does not provide a legal determination of Northern Nevada Building & Construction Trade Council Development Corporation's compliance with the compliance requirements referred to above.

611 N. Nevada Street
Carson City, Nevada 89703
Phone: (775) 882-7198
Fax: (775) 883-4346

Members of: CPA Connect
Nevada Society of Certified Public Accountants
American Institute of Certified Public Accountants
Affordable Housing Association of Certified Public Accountants

Responsibilities of Management for Compliance

Management is responsible for compliance with the requirements referred to above and for the design, implementation, and maintenance of effective internal control over compliance with the requirements of laws, statutes, regulations, rules, and provisions of contracts or grant agreements applicable to Northern Nevada Building & Construction Trade Council Development Corporation's federal programs.

Auditor's Responsibilities for the Audit of Compliance

Our objectives are to obtain reasonable assurance about whether material noncompliance with the compliance requirements referred to above occurred, whether due to fraud or error, and express an opinion on Northern Nevada Building & Construction Trade Council Development Corporation's compliance based on our audit. Reasonable assurance is a high level of assurance but is not absolute assurance and therefore is not a guarantee that an audit conducted in accordance with generally accepted auditing standards, *Government Auditing Standards*, and the Uniform Guidance will always detect material noncompliance when it exists. The risk of not detecting material noncompliance resulting from fraud is higher than for that resulting from error, as fraud may involve collusion, forgery, intentional omissions, misrepresentation, or the override of internal control. Noncompliance with the compliance requirements referred to above is considered material if there is a substantial likelihood that, individually or in the aggregate, it would influence the judgment made by a reasonable user of the report on compliance about Northern Nevada Building & Construction Trade Council Development Corporation's compliance with the requirements of each major federal program as a whole.

In performing an audit is accordance with generally accepted auditing standards, *Government Auditing Standards*, and the Uniform Guidance, we:

- Exercise professional judgment and maintain professional skepticism throughout the audit.
- Identify and assess the risks of material noncompliance, whether due to fraud or error, and design and perform audit procedures responsive to those risks. Such procedures include examining, on a test basis, evidence regarding Northern Nevada Building & Construction Trade Council Development Corporation's compliance with the compliance requirements referred to above and performing such other procedures as we considered necessary in the circumstances.
- Obtain an understanding of Northern Nevada Building & Construction Trade Council Development Corporation's internal control over compliance relevant to the audit in order to design audit procedures that are appropriate in the circumstances and to test and report on internal control over compliance in accordance with the Uniform Guidance, but not for the purpose of expressing an opinion on effectiveness of Northern Nevada Building & Construction Trade Council Development Corporation's internal control over compliance. Accordingly, no such opinion is expressed.

We are required to communicate with those charged with governance regarding, among other matters, the planned scope and timing of the audit and any significant deficiencies and material weaknesses in internal control over compliance that we identified during the audit.

We believe that our audit provides a reasonable basis for our opinion on compliance for each major federal program. However, our audit does not provide a legal determination of Northern Nevada Building & Construction Trade Council Development Corporation's compliance.

Report on Internal Control over Compliance

A *deficiency in internal control over compliance* exists when the design or operation of a control over compliance does not allow management or employees, in the normal course of performing their assigned functions, to prevent, or detect and correct, noncompliance with a type of compliance requirement of a federal program on a timely basis. A *material weakness in internal control over compliance* is a deficiency, or combination of deficiencies, in internal control over compliance, such that there is a reasonable possibility that material noncompliance with a type of compliance requirement of a federal program will not be prevented, or detected and corrected, on a timely basis. A *significant deficiency in internal control over compliance* is a deficiency, or a combination of deficiencies, in internal control over compliance with a type of compliance requirement of a federal program that is less severe than a material weakness in internal control over compliance, yet important enough to merit attention by those charged with governance.

Our consideration of internal control over compliance was for the limited purpose described in the Auditor's Responsibilities for the Audit of Compliance section above and was not designed to identify all deficiencies in internal control over compliance that might be material weaknesses or significant deficiencies in internal control over compliance. Given these limitations, during our audit we did not identify any deficiencies in internal control over compliance that we consider to be material weaknesses, as defined above. However, material weaknesses may exist that have not been identified.

Our audit was not designed for the purpose of expressing an opinion on the effectiveness of internal control over compliance. Accordingly, no such opinion is expressed.

The purpose of this report on internal control over compliance is solely to describe the scope of our testing of internal control over compliance and the results of that testing based on the requirements of the Uniform Guidance. Accordingly, this report is not suitable for any other purpose.

Steele & Associates, LLC

Carson City, Nevada
December 9, 2022

Northern Nevada Building & Construction
Trade Council Development Corporation
dba Carville Park Apartments
Schedule of Findings and Questioned Costs
For the Year Ended March 31, 2022

A. Summary of Audit Results

1. The auditor's report expresses an unmodified opinion on whether the financial statements of Northern Nevada Building & Construction Trade Council Development Corporation were prepared in accordance with GAAP.

2. No deficiencies material to the financial statements of Northern Nevada Building & Construction Trade Council Development Corporation were disclosed during the audit. No material weaknesses are reported.

3. No instances of noncompliance material to the financial statement of Northern Nevada Building & Construction Trade Council Development corporation were disclosed during the audit.

4. No deficiencies in internal control over major federal award programs were noted during the audit. No material weaknesses are reported

5. The auditor's report on compliance for the major federal award programs for Northern Nevada Building & Construction Trade Council Development Corporation expresses an unmodified opinion on all major federal programs.

6. Audit findings that are required to be reported in accordance with 2 CFR section 200.516(a) are reported in this Schedule.

7. The program tested as a major program was Section 8 Housing Assistance Payments CFDA #14.195.

8. The threshold for distinguishing Types A and B programs was $750,000.

9. Northern Nevada Building & Construction Trade Council Development corporation was determined to be a low-risk auditee.

Northern Nevada Building & Construction
Trade Council Development Corporation
dba Carville Park Apartments
HUD PROJECT NO. 125-35077-NP

CERTIFICATE OF PROJECT OWNER

We hereby certify that we have examined the accompanying financial statements and supplemental data of Northern Nevada Building & Construction Trade Council Development Corporation, and to the best of our knowledge and belief, the same are accurate and complete.

Date	Russ James, President
Date	Rob Benner, Secretary/Treasurer

Northern Nevada Building & Construction
Trade Council Development Corporation
dba Carville Park Apartments
HUD PROJECT NO. 125-35077-NP

CERTIFICATE OF MANAGING AGENT

We hereby certify that we have examined the accompanying financial statements and supplemental data of Northern Nevada Building & Construction Trade Council Development Corporation and to the best of our knowledge and belief, the same are accurate and complete.

Date

Russ James, President

Building & Construction Trade Council
of Northern Nevada

Management Agent Employer Identification Number 88-0025643

COMMUNICATIONS WITH GOVERNANCE

Jonathan S. Steele, CPA CGMA

Steele
Certified Public Accountants

Vanessa L. Davis, CPA CGMA

To the Board of Directors
Northern Nevada Building & Construction
Trade Council Development Corporation

We have audited the basic financial statements of the Northern Nevada Building & Construction Trade Council Development Corporation for the year ended March 31, 2022, and have issued our report thereon date December 9, 2022. Professional standards require that we provide you with the following information related to our audit.

Our Responsibility under U.S. Generally Accepted Auditing Standards

As stated in our engagement letter dated July 1, 2022, our responsibility as described by professional standards, is to express opinions about whether the financial statements prepared by management with your oversight are fairly presented, in all material respects in conformity with U.S. generally accepted accounting principles. Our audit of the financial statements does not relieve you or management or your responsibilities.

Significant Audit Findings

Qualitative Aspects of Accounting Practices

Management is responsible for the selection and use of appropriate accounting policies. The significant accounting policies used by the Northern Nevada Building & Construction Trade Council Development Corporation are described in the financial statements. No new accounting policies were adopted and the application of existing policies was not changed during the 2021/2022 fiscal year. We noted no transactions entered into by the organization during the year for which there is a lack of authoritative guidance or consensus. There are no significant transactions that have been recognized in the financial statements in a different period than when the transaction occurred.

Accounting estimates are an integral part of the financial statements prepared by management and are based on management's knowledge and experience about past and current events and assumptions about future events. Certain accounting estimates are particularly sensitive because of their significance to the financial statements and because of the possibility that future events affecting them may differ significantly from those expected. The most sensitive estimate affecting the financial statement was management's determination that all accounts receivable are collectible at year end. We evaluated the key factors and assumptions used to develop the estimate of collectability in determining what is reasonable in relation to the financial statements taken as a whole.

611 N. Nevada Street
Carson City, Nevada 89703
Phone: (775) 882-7198
Fax: (775) 883-4346

Members of: CPA Connect
Nevada Society of Certified Public Accountants
American Institute of Certified Public Accountants
Affordable Housing Association of Certified Public Accountants

Difficulties Encountered in Performing the Audit

We encountered no significant difficulties in dealing with management in performing and completing our audit.

Corrected and Uncorrected Misstatements

Professional standards require us to accumulate all known and likely misstatements identified during the audit, other than those that are trivial, and communicate them to the appropriate level of management. Management has corrected all such misstatements. The following material misstatements detected as a result of audit procedures were corrected by management:

1. Record depreciation expense in the amount of $89,339.

The total net income effect of all adjustments proposed and recorded by management was to decrease net income by $74,918.

Disagreements with Management

For purposes of this letter, professional standards define a disagreement with management as a financial accounting, reporting, or auditing matter, whether or not resolved to our satisfaction, that could be significant to the financial statements or the auditor's report. We are pleased to report that no such disagreements arose during the course of our audit.

Management Representations

We have requested certain representations from management that are included in the management representation letter dated December 9, 2022.

Management Consultations with Other Independent Accountants

In some cases, management may decide to consult with other accountants about auditing and accounting matters, similar to obtaining a "second opinion" on certain situations. If a consultation involves application of an accounting principle to the governmental unit's financial statements or a determination of the type of auditor's opinion that may be expressed on those statements, our professional standards require the consulting accountant to check with us to determine that the consultant has all the relevant facts. To our knowledge, there were no such consultations with other accountants.

Other Audit Findings or Issues

We generally discuss a variety of matters, including the application of accounting principles and auditing standards, with management each year prior to retention as the governmental unit's auditors. However, these discussions occurred in the normal course of our professional relationship and our responses were not a condition of our retention.

As required by generally accepted auditing standards and the terms of our engagement, in planning and performing our audit, we considered the internal control solely to determine the auditing procedures to be employed for the purpose of enabling us to express our opinion on the financial statements and not for the purpose of expressing an opinion on the effectiveness of the

District's internal control over financial reporting. Therefore, we express no opinion or other form of assurance thereon.

A deficiency in internal control exists when the design or operation of a control does not allow management or employees, in the normal course of performing their assigned functions, to prevent or detect and correct misstatements on a timely basis. A material weakness is a deficiency, or combination of deficiencies, in internal control such that there is a reasonable possibility that a material misstatement of the entity's financial statements will not be prevented, or detected and corrected on a timely basis. A significant deficiency is a deficiency, or combination of deficiencies in internal control that is less severe than a material weakness, yet important enough to merit attention by those charged with governance. Our report on Internal Control over Financial Reporting and on Compliance and Other Matters Based on an Audit of Financial Statements Performed in Accordance with *Government Auditing Standards* dated December 9, 2022, noted no significant deficiencies or material weaknesses.

This information is intended solely for the use of management and the Organization's Board of Directors and is not intended to be and should not be used by anyone other than these specified parties.

Stule & Associates, LLC

Carson City, Nevada
December 9, 2022

EXHIBIT 8B

AUDITED FINANCIAL STATEMENTS

For the fiscal year ending March 31, 2021.

NORTHERN NEVADA BUILDING & CONSTRUCTION
TRADE COUNCIL DEVELOPMENT CORPORATION
dba CARVILLE PARK APARTMENTS
HUD PROJECT NO. 125-35077-NP
FINANCIAL STATEMENTS
AND SUPPLEMENTARY INFORMATION
MARCH 31, 2021

NORTHERN NEVADA BUILDING & CONSTRUCTION
TRADE COUNCIL DEVELOPMENT CORPORATION
dba CARVILLE PARK APARTMENTS
HUD PROJECT NO. 125-35077-NP
FINANCIAL STATEMENTS
AND SUPPLEMENTARY INFORMATION
YEAR ENDED MARCH 31, 2021

TABLE OF CONTENTS

	Page No.
INDEPENDENT AUDITOR'S REPORT	1 - 2
FINANCIAL STATEMENTS	
Statement of Financial Position	3
Statement of Activities	4
Statement of Cash Flows	5 - 6
Notes to Financial Statements	7 - 14
REPORTS REQUIRED BY THE UNIFORM GUIDANCE	
Schedule of Expenditures of Federal Awards	16
INDEPENDENT AUDITOR'S REPORT ON INTERNAL CONTROL OVER FINANCIAL REPORTING AND ON COMPLIANCE AND OTHER MATTERS BASED ON AN AUDIT OF FINANCIAL STATEMENTS PERFORMED IN ACCORDANCE WITH *GOVERNMENT AUDITING STANDARDS*	17 - 18
INDEPENDENT AUDITOR'S REPORT ON COMPLIANCE FOR EACH MAJOR PROGRAM AND ON INTERNAL CONTROL OVER COMPLIANCE REQUIRED BY THE UNIFORM GUIDANCE	19 - 20
SCHEDULE OF FINDINGS AND QUESTIONED COSTS	21
CERTIFICATE OF PROJECT OWNER	22
CERTIFICATE OF MANAGING AGENT	23
COMMUNICATIONS WITH GOVERNANCE	25 - 27

Jonathan S. Steele, CPA CGMA

Steele
Certified Public Accountants

Vanessa L. Davis, CPA CGMA

INDEPENDENT AUDITOR'S REPORT

To the Board of Directors
Northern Nevada Building & Construction
Trade Council Development Corporation
dba Carville Park Apartment
HUD Project No. 125-35077-NP
Reno, Nevada

Report on the Financial Statements

We have audited the accompanying financial statements of Northern Nevada Building & Construction Trade Council Development Corporation (a nonprofit organization), dba Carville Park Apartments, HUD Project No. 125-35077-NP, which comprise the statement of financial position as of March 31, 2021, and the related statements of activities and cash flows for the year then ended, and the related notes to the financial statements.

Management's Responsibility for the Financial Statements

Management is responsible for the preparation and fair presentation of these financial statements in accordance with accounting principles generally accepted in the United States of America; this includes the design, implementation, and maintenance of internal control relevant to the preparation and fair presentation of financial statements that are free from material misstatement, whether due to fraud or error.

Auditor's Responsibility

Our responsibility is to express an opinion on these financial statements based on our audit. We conducted our audit in accordance with auditing standards generally accepted in the United States of America and the standards applicable to financial audits contained in *Government Auditing Standards*, issued by the Comptroller General of the United States. Those standards require that we plan and perform the audit to obtain reasonable assurance about whether the financial statements are free of material misstatement.

An audit involves performing procedures to obtain audit evidence about the amounts and disclosures in the financial statements. The procedures selected depend on the auditor's judgment, including the assessment of the risks of material misstatement of the financial statements whether due to fraud or error. In making those risk assessments, the auditor considers internal control relevant to the entity's preparation and fair presentation of the financial statements in order to design audit procedures that are appropriate in the circumstances, but not for the purpose of expressing an opinion on the effectiveness of the entity's internal control. Accordingly, we express no such opinion. An audit also includes evaluating the appropriateness of accounting policies used and the reasonableness of significant accounting estimates made by management, as well as evaluating the overall presentation of the financial statements.

611 N. Nevada Street
Carson City, Nevada 89703
Phone: (775) 882-7198
Fax: (775) 883-4346

Members of: CPA Connect
Nevada Society of Certified Public Accountants
American Institute of Certified Public Accountants
Affordable Housing Association of Certified Public Accountants

We believe that the audit evidence we have obtained is sufficient and appropriate to provide a basis for our audit opinion.

Opinion

In our opinion, the financial statements referred to above present fairly, in all material respects, the financial position of Northern Nevada Building & Construction Trade Council Development Corporation, dba Carville Park apartments, as of March 31, 2021, and the changes in its net assets and its cash flows for the year then ended in accordance with accounting principles generally accepted in the United States of America.

Other Matter

Other Information

Our audit was conducted for the purpose of forming an opinion on the financial statements as a whole. The accompanying schedule of expenditures of federal awards, as required by Title 2 U.S. *Code of Federal Regulations* Part 200, *Uniform Administrative Requirements, Cost Principles, and Audit Requirements for Federal Awards,* is presented for purposes of additional analysis and is not a required part of the financial statements. Such information is the responsibility of management and was derived from and relates directly to the underlying accounting and other records used to prepare the financial statements. The information has been subjected to the auditing procedures applied in the audit of the financial statements and certain additional procedures, including comparing and reconciling such information directly to the underlying accounting and other records used to prepare the financial statements or to the financial statements themselves, and other additional procedures in accordance with auditing standards generally accepted in the United States of America. In our opinion, the information is fairly stated in all material respects in relation to the financial statements as a whole.

Other Reporting Required by *Government Auditing Standards*

In accordance with *Government Auditing Standards*, we have also issued our report dated July 14, 2021, on our consideration of Northern Nevada Building & Construction Trade Council Development Corporation, dba Carville Park Apartments' internal control over financial reporting and on our tests of its compliance with certain provisions of laws, regulations, contracts, and grant agreements and other matters. The purpose of that report is to describe the scope of our testing of internal control over financial reporting and compliance and the results of that testing, and not to provide an opinion on internal control over financial reporting or on compliance. That report is an integral part of an audit performed in accordance with *Government Auditing Standards* in considering Northern Nevada Building & Construction Trade Council Development Corporation's internal control over financial reporting and compliance.

Stule Associates, LLC

Carson City, Nevada
July 14, 2021

Northern Nevada Building & Construction
Trade Council Development Corporation
dba Carville Park Apartments
Statement of Financial Position
March 31, 2021

ASSETS		
CURRENT ASSETS		
Cash and Equivalents	$	334,404
Accounts Receivable (Net of Allowance for Doubtful Accounts of $8,187)		13,064
Prepaid Expenses		38,355
Due from Related Party		63,730
TOTAL CURRENT ASSETS		449,553
PROPERTY AND EQUIPMENT		
Furniture and Equipment		890,231
Buildings and Improvements		2,601,484
Land and Improvements		1,292,464
		4,784,179
Less Accumulated Depreciation		(3,839,682)
TOTAL PROPERTY AND EQUIPMENT		944,497
OTHER ASSETS		
Tenant Deposits Held in Trust		42,458
Certificates of Deposit		27,203
Reserve for Replacements		42,489
TOTAL OTHER ASSETS		112,150
TOTAL ASSETS	$	1,506,200
LIABILITIES AND NET ASSETS		
CURRENT LIABILITIES		
Accounts Payable	$	11,823
Accrued Liabilities		685
Tenant Security Deposits		30,890
Prepaid Rents		7,098
TOTAL CURRENT LIABILITIES/TOTAL LIABILITIES		50,496
NET ASSETS		
Net Assets without Donor Restrictions		1,455,704
Net Assets with Donor Restrictions		-
TOTAL NET ASSETS		1,455,704
TOTAL LIABILITIES AND NET ASSETS	$	1,506,200

See Accompanying Independent Auditor's Report & Notes to Financial Statements

Northern Nevada Building & Construction
Trade Council Development Corporation
dba Carville Park Apartments
Statement of Activities
For the Year Ended March 31, 2021

REVENUES		
Rental	$	1,405,091
Interest Income		618
Tenant Charges		11,762
Laundry, Vending, and Miscellaneous		35,458
TOTAL REVENUE		1,452,929
EXPENSES		
Program Services		
Administrative		102,875
Utilities		175,350
Operating and Maintenance		402,240
Taxes and Insurance		145,108
Insurance and Employee Benefits		73,604
Depreciation		91,548
		990,725
Supporting Activities		
Management Fees		117,312
Office Salaries		64,866
Office Expenses		31,858
		214,036
TOTAL EXPENSES		1,204,761
CHANGE IN NET ASSETS WITHOUT DONOR RESTRICTIONS		248,168
NET ASSETS WITHOUT DONOR RESTRICTIONS, MARCH 31, 2020		1,207,536
NET ASSETS WITHOUT DONOR RESTRICTIONS, MARCH 31, 2021	$	1,455,704

See Accompanying Independent Auditor's Report & Notes to Financial Statements

Northern Nevada Building & Construction
Trade Council Development Corporation
dba Carville Park Apartments
Statement of Cash Flows
For the Year Ended March 31, 2021

CASH FLOWS FROM OPERATING ACTIVITIES		
Rental Receipts	$	1,395,766
Interest Receipts		618
Other Receipts		50,149
Administrative Expenses Paid		(58,946)
Management Fees Paid		(117,312)
Utilities Expenses Paid		(175,350)
Salaries and Wages Paid		(282,725)
Operating and Maintenance Expenses Paid		(305,121)
Real Estate Taxes Paid		(65,166)
Property Insurance Paid		(48,374)
Miscellaneous Taxes and Insurance Paid		(100,182)
NET CASH USED BY OPERATING ACTIVITIES		293,357
CASH FLOWS FROM INVESTING ACTIVITIES		
Interest Reinvested in CD		(271)
Acquisition of Property and Equipment		(108,217)
NET CASH PROVIDED BY INVESTING ACTIVITIES		(108,488)
NET INCREASE (DECREASE) IN CASH AND CASH EQUIVALENTS		184,869
CASH, CASH EQUIVALENTS AND RESTRICTED CASH MARCH 31, 2020		234,482
CASH, CASH EQUIVALENTS AND RESTRICTED CASH MARCH 31, 2021	$	419,351

Northern Nevada Building & Construction
Trade Council Development Corporation
dba Carville Park Apartments
Statement of Cash Flows
For the Year Ended March 31, 2021

RECONCILIATION OF CHANGE IN NET ASSETS TO NET CASH USED BY OPERATING ACTIVITIES		
Decrease in Net Assets	$	248,168
Adjustments to Reconcile Increase (Decrease) in Net Assets to Net Cash Used By Operating Activities		
Depreciation Expense		91,548
(Increase) decrease in:		
Accounts Receivable		(3,262)
Prepaid Expenses		8,350
(Decrease) increase in:		
Accounts Payable		(44,404)
Accrued Liabilities		59
Prepaid Rents		(10,030)
Tenant Security Deposits		2,928
NET CASH USED BY OPERATING ACTIVITIES	$	293,357

Northern Nevada Building & Construction
Trade Council Development Corporation
dba Carville Park Apartments
Notes to Financial Statements
March 31, 2021

NOTE 1 – SUMMARY OF SIGNIFICANT ACCOUNTING POLICIES

1. Business Activity

   The Corporation was formed as a non-profit corporation under the laws of the State of Nevada on April 6, 1979. It was organized to construct, own, and operate a 208-unit rental apartment project in Reno, Nevada, knows as Carville Park Apartments.

   The Project is regulated by the U.S. Department of Housing and Urban Development (HUD) as to rent charges and operating methods. Lower rental charges to tenants are recovered by the Project through rent subsidies provided by HUD. The Section 8 program is a major HUD program.

2. Accounting Methods and Revenue Recognition

   The Project's primary revenue stream is rent charges for residential units under leases with durations of less than one year. The Project records revenue for such leases at gross potential rent as prescribed by HUD. The rental value of vacancies and other concessions are stated separately to present net rental income on the accrual basis. Subsidy revenue for low-income eligible tenants is provided under a Section 8 housing assistance payment contract. This contract requires tenants to contribute a portion of the contract rent based on formulas prescribed by the Department of Housing and Urban Development (HUD). The difference from the calculated subsidy and the contract rent is paid by the HUD. The current contract expires on October 31, 2023.

   Subsidy income is considered part of the lease and is not considered a contribution under ASC 958. This standard indicates that government payments to specifically identified participants are to be considered exchange transactions and potentially subject to ASC 606. The Project believes that both rental and subsidy income streams are exempted from compliance with ASC 606 due to their inclusion under current and future lease standards. Revenue streams subject to ASC 606 include: laundry, vending, pet and parking fees as well as damages. Such fees are ancillary to the lease process and are recognized as revenue at the point in time such fees are incurred.

3. Classification of Net Assets

   Net assets of the Project are classified based on the presence or absence of donor-imposed restrictions. Net assets are comprised of two groups as follows:

   Net Assets without Donor Restrictions – Amounts that are not subject to usage restrictions based on donor-imposed requirements. This class also includes assets previously restricted where restrictions have been men.

NOTE 1 - SUMMARY OF SIGNIFICANT ACCOUNTING POLICIES (CONTINUED)

3. Classification of Net Assets (Continued)

Net assets with Donor Restrictions – Assets subject to usage limitations based on donor-imposed or grantor restrictions. These restrictions may be temporary or may be based on a particular use. Restrictions may be met by the passage of time or by actions of the Project. Certain restrictions may need to be maintained in perpetuity.

Earnings related to restricted net assets will be included in net assets without donor-restrictions unless otherwise specifically required to be included in donor-restricted net assets by the donor or by applicable state law.

The Project does not interpret the guidance in the standard to include amounts restricted by HUD as donor-restricted. The project believes that these amounts do not meet the spirit of the standard for such a classification or is there any industry standard indicating that others will treat these assets as donor-restricted.

All net assets of the Project at March 31, 2021 were considered to be net assets without donor restrictions.

4. Property and Equipment

Property and equipment are carried at cost or, if donated, at the approximate fair value at the date of donation. Fixed asset acquisitions in excess of $500 are capitalized and depreciation is provided using the straight-line method over the estimated useful lives of the buildings and related land improvements (15 – 40 years) and furnishings and equipment (5 – 7 years). Depreciation expense for the year ended March 31, 2021, was $91,548.

5. Cash and Cash Equivalents

For purposes of the Statement of Cash Flows, the Project considers all unrestricted highly liquid investments purchased with original maturities of three months or less to be cash equivalents. At March 31, 2021, there were no cash equivalents.

Restricted cash consists of Tenant security deposits held in trust and reserves for replacements.

NOTE 1 – SUMMARY OF SIGNIFICANT ACCOUNTING POLICIES (CONTINUED)

6. Estimates

   The preparation of financial statements in conformity with generally accepted accounting principles requires management to make estimates and assumptions that affect the reported amounts of assets and liabilities and disclosure of contingent assets and liabilities at the date of the financial statements and the reported amounts of revenue and expenses during the reporting period. Actual results could differ from those estimates.

7. Investments

   Investments in marketable securities with readily determinable fair values and all investments in debt securities are reported at their fair values in the statements of financial position. Unrealized gains and losses are included in the statement of activities.

8. Concentrations of Credit Risk

   Financial instruments that potentially subject the Project to concentrations of credit risk consist principally of cash in banks, investment accounts, and tenant accounts receivable.

   The Project has funds in credit union accounts which are insured by the National Credit Union Association (NCUA) up to $250,000. On March 31, 2021, the Project's credit union account balances exceeded the NCUA insured balance by $153,914.

   The Project maintains its reserve funds in investment institutions. The investments that the Project holds consist of money market funds. The funds are insured by the Securities Investor Protection Corporation for the amount invested in the event of fraud, theft, or other such deceptive activity.

   Concentrations of credit risk with respect to tenant accounts receivable are limited because all tenants are required to pay their rent monthly on the first of the month. However, since all of the Project's tenants live and work in the Northern Nevada area, the Project's ability to collect tenant accounts receivable may be affected by economic fluctuations in that geographic area.

   The Project's primary asset is a 208-unit apartment project. The Project's operations are concentrated in the multifamily real estate market. In addition, the Project operates in a heavily regulated environment. The operations of the Project are subject to the administrative directives, rules and regulations of federal, state and local regulatory agencies, including, but not limited to, HUD. Such administrative directives, rules and regulations are subject to change by an act of congress or an administrative change mandated by HUD. Such changes may occur with little notice or inadequate funding to pay for the related cost, including the additional administrative burden, to comply with a change.

NOTE 1 - SUMMARY OF SIGNIFICANT ACCOUNTING POLICIES (CONTINUED)

9. Bad Debts

   Uncollectible accounts receivable related to tenant rents are charged directly against operations when they are determined to be uncollectible. Use of this method does not result in a material difference from the valuation method required by generally accepted accounting principles.

   Occasionally, the tenant's financial condition changes subsequent to the receipt of the HUD Subsidy payment. When that occurs, the tenant enters into a repayment contract with the Project for the overpayment. Payments are recorded as rent income when received and reported to HUD, who then reduces the subsidy payment for that tenant by the amount received. However, those payment are only collectible after the tenant's normal rent and as long as the tenant remains a tenant. For that reason, the collectability of those particular contract receivables is in question. To that end the entire balance related to the repayment agreements at March 31, 2021, of $8,187, have been reserved against and included in an allowance for doubtful accounts.

10. Impairment of Long-Loved Assets

    The Organization reviews long-lived assets, including property and equipment and intangible assets, for impairment whenever events or changes in business circumstances indicate that the carrying amount of an asset may not be fully recoverable. An impairment loss would be recognized when the estimated future cash flows from the use of the asset are less than the carrying amount of that asset. To date, there have been no such losses.

11. Advertising and Marketing

    Advertising and marketing costs are expensed as incurred. There was no advertising expense incurred for the year ended March 31, 2021.

12. Income Taxes

    The Project is a nonprofit corporation that is exempt from federal income taxes under Section 501(c)(3) of the Internal Revenue Code. Accordingly, no liability for federal income taxes has been provided in the financial statements. It is the Project's tax position that it has not engaged in activities that would jeopardize its exempt status nor has it engaged in activities that would result in unrelated business income tax. The Project's Forms 990, *Return of Organization Exempt from Income Tax*, for the tax years ending 2017, 2018 and 2019 are subject to examination by the IRS, generally for three years after they were filed.

NOTE 1 - SUMMARY OF SIGNIFICANT ACCOUNTING POLICIES (CONTINUED)

13. Subsequent Events

In preparing these financial statements, the Project has evaluated events and transactions for potential recognition or disclosure through July 14, 2021, the date the financial statements were available to be issued. Subsequent events after that date have not been evaluated.

NOTE 2 – ALLOWABLE DISTRIBUTIONS

In accordance with HUD Handbook 4370.2 REV-1, CHG-1, *Financial Operations and Accounting Procedures for Insured Multifamily Projects,* page 2 – 12, distributions to owners are not permitted on non-profit projects. For the year ended March 31, 2021, there were no distributions made.

NOTE 3 – CASH, RESTRICTED DEPOSITS AND EQUIVALENTS

The balance in cash, cash equivalents, restricted deposits and restricted deposit equivalents consists of the following:

Operating Cash	$ 334,404
Restricted Deposits - Security Deposits	42,458
Restricted Deposits - Reserve for Replacement	42,489
Total Cash, Restricted Cash and Equivalents	$ 419,351

NOTE 4 – LIQUIDITY

At March 31, 2021, the Project has $347,465 cash and equivalents available to meet needs for general expenditures consisting of cash of $334,404 and $13,061 of accounts receivable. None of the financial assets are subject to donor or other contractual restrictions. Accordingly, all such funds are available to meet the cash needs of the project in the next 12 months. In addition, the Project may maintain funds in a reserve for replacements. These funds are used for the benefit of the tenants and/or Project. Such funds are not considered by the Project to have donor-restrictions.

The Project manages its liquidity by developing and adopting annual operating budgets that provide sufficient funds for general expenditures in meeting its liabilities and other obligations as they become due. Cash needs of the Project are expected to be met on a monthly basis from the rents of project units. In general, the Project maintains sufficient financial assets on hand to meet 30 days' worth of normal operating expenses.

NOTE 5 – FUNCTIONAL EXPENSES

The Project provides low-income housing to its tenants. The cost of providing program services and supporting activities has been summarized on a functional basis in the table below. Expenses directly attributable to a specific functional activity of the Project are reported as expenses of those functional activities. Allocations of expenses were made on a direct allocation basis.

FASSUB Line Items	Program Services Rental Operations	Supporting Activities Management and General	Total Expenses
Payroll and benefits	$ 291,522	$ 64,866	$ 356,388
Administrative	34,261	31,858	66,119
Management fee		117,312	117,312
Utilities	175,350		175,350
Repairs and maintenance	228,427		228,427
Taxes and insurance	145,108		145,108
Other	24,509		24,509
Depreciation	91,548		91,548
Totals	$ 990,725	$ 214,036	$ 1,204,761

NOTE 6 – RELATED PARTY TRANSACTIONS

Transactions involving related parties cannot be presumed to be carried out on an arm's-length basis. Except for routine transactions, it is generally not possible to determine whether a particular transaction would have taken place if the parties had not been related or, assuming it would have taken place, what the terms and manner of settlement would have been.

Effective November 1, 1987, management of the Project was provided by the Building and Construction Trades Council of Northern Nevada, a non-profit corporation which elects the Board of Directors of the Northern Nevada Building & Construction Trade Council Development Corporation, dba Carville Park Apartments. The management fee is $47 per unit per month for a total paid of $117,312 during the year ended March 31, 2021.

During the 2008 and 2009 fiscal years, the owners placed the property up for sale. During those two years, $72,630 was paid by the Project for various costs associated with the sale. These expenditures are an entity expense not a project expense and, as such, constitute an unauthorized distribution to the Project Owner. Therefore, the Owner is required to reimburse the Project for these expenditures. The amount is recorded as due from related party in the statement of financial position. During the year ended March 31, 2021, no payments were made on this receivable, leaving a balance due of $63,730.

NOTE 7 – PENSION CONTRIBUTIONS

In connection with its collective bargaining agreement with the Communication Workers of America, AFL-CIO, the company participates with other companies in the communication industry in a defined benefit pension plan. The plan covers all of the company's employees who are members of the Communication Workers of America Union. The pension contribution expense for the year ended March 31, 2021, was $26,152.

NOTE 8 – HOUSING ASSISTANCE PAYMENTS

Pursuant to Section 8 of Title II of the United States Housing Act of 1973, as amended, rents are subsidized by governmental payments through a housing assistance contract between the United States Department of Housing and Urban Development (HUD) and the Organization. The Partnership receives subsidies for 208 apartments which are rented to qualified low and very low income families in an amount which equals the difference between the Contract Rent, as determined by HUD, and 30% of the tenant's family income. The contract expires October 31, 2023.

In addition, the HAP contract provides that the Corporation is entitled to Section 8 Subsidies in the amount of 80% of the Contract Rents for vacant apartments for a period not to exceed thirty days. Housing assistance payments received totaled $946,589 for the year ended March 31, 2021.

As a result of the economic impact of the COVID-19 global pandemic, the United Stated Department of Housing and Urban Development (HUD) provided additional funding through the COVID-19 Supplemental Payment (CSP) program. The Organization received an additional $27,480 in additional housing assistance through this program.

NOTE 9 – LEASE TRANSACTIONS

The Organization entered into a five year lease agreement, commencing October 1, 2018, for the use of a copy systems for $57 per month. The lease also provides for sales tax and per copy charges which vary according to usage in addition to the monthly fee. The lease expense amounted to $2,612 for the year ended March 31, 2021.

NOTE 9 – LEASE TRANSACTIONS (CONTINUED)

Future obligations over the terms of the operating lease are as follows:

Year Ending March 31,	
2021	$ 2,612
2022	2,612
2023	2,612
2024	2,612
2025 and Thereafter	-
	$ 10,448

NOTE 10 – CONTINGENT EVENTS

In December 2019, an outbreak of a novel strain of coronavirus (COVID-19) originated in Wuhan, China and has since spread to other countries, including the U.S. On March 11, 2020, the World Health Organization characterized COVID-19 as a pandemic. In addition, multiple jurisdictions in the U.S. have declared a state of emergency. It is anticipated that these impacts will continue for some time. There has been no immediate impact to the Project's operations. Future potential impacts may include disruptions or restrictions on our employees' ability to work or the tenants ability to pay the required monthly rent. Operating functions that may be changed include intake, recertifications and maintenance. Changes to the operating environment may increase operating costs. Additional impacts may include the ability of tenants to continue making rental payments as a result of job loss or other pandemic related issues. The existing HAP contract with HUD could potentially mitigate the tenant collection losses incurred. The future effects of these issues are unknown.

Northern Nevada Building & Construction
Trade Council Development Corporation
dba Carville Park apartments
March 31, 2021

REPORTS REQUIRED BY THE UNIFORM GUIDANCE

Northern Nevada Building & Construction
Trade Council Development Corporation
dba Carville Park Apartments
Schedule of Expenditures of Federal Awards
For the Year ended March 31, 2021

FEDERAL GRANTOR/PASS-THROUGH GRANTOR/PROGRAM TITLE	FEDERAL CFDA NUMBER	FEDERAL EXPENDITURES
U.S. Department of Housing and Urban Development		
Section 8 Housing Assistance Payments	14.182	$ 946,237
COVID-19 Supplemental Payment (CSP) Request	14.182	27,480
Total Expenditures of Federal Awards		$ 973,717

Note 1 – Basis of Presentation

The accompanying schedule of expenditures of federal awards (the Schedule) includes the federal award activity of Northern Nevada Building & Construction Trade Council Development Corporation, dba Carville Park Apartments, HUD Project No. 125-350SEFA77-NP, under programs of the federal government for the year ended March 31, 2021. The information in this Schedule is presented in accordance with the requirements of Title 2 U.S. *Code of Federal Regulations* Part 200, *Uniform Administrative Requirements, Cost Principles, and Audit Requirements for Federal Awards* (Uniform Guidance). Because the Schedule presents only a selected portion of the operations of Northern Nevada Building & Construction Trade Council Development Corporation, it is not intended to and does not present the financial position, changes in net assets, or cash flows of Northern Nevada Building & Construction Trade Council Development Corporation.

Note 2 – Summary of Significant Accounting Policies

A. Expenditures reported on the schedule are reported on the accrual basis of accounting. Such expenditures are recognized following the cost principles contained in the Uniform Guidance, wherein certain types of expenditures are not allowable or are limited as to reimbursement.

B. The Project did not receive Federal Financial Assistance in the form of loans or loan guarantees, or in the form of endowment funds.

C. The schedule does not include matching expenditures.

D. Pass-through entity identifying numbers are presented where available.

Jonathan S. Steele, CPA CGMA

Steele
Certified Public Accountants

Vanessa L. Davis, CPA CGMA

INDEPENDENT AUDITOR'S REPORT ON INTERNAL CONTROL OVER FINANCIAL REPORTING AND ON COMPLIANCE AND OTHER MATTERS BASED ON AN AUDIT OF FINANCIAL STATEMENTS PERFORMED IN ACCORDANCE WITH *GOVERNMENT AUDITING STANDARDS*

To the Board of Directors of
Northern Nevada building & Construction
Trade Council Development Corporation
dba Carville Park Apartment
HUD Project No. 125-35077-NP
Reno, Nevada

We have audited, in accordance with the auditing standards generally accepted in the United States of America and the standards applicable to Financial audits contained in *Government Auditing Standards* issued by the Comptroller General of the United States, the financial statements of Northern Nevada Building & Construction Trade Council Development Corporation (a nonprofit organization), dba Carville Park Apartment, HUD Project No. 125-35077-NP, which comprise the statement of financial position as of March 31, 2021, and the related statements of activities and cash flows for the year then ended, and the related notes to the financial statements, and have issued our report thereon dated July 14, 2021.

Internal Control over Financial Reporting

In planning and performing our audit of the financial statements, we considered Northern Nevada Building & Construction Trade Council Development Corporation's internal control over financial reporting (internal control) to determine the audit procedures that are appropriate in the circumstances for the purpose of expressing our opinion on the financial statements, but not for the purpose of expressing an opinion on the effectiveness of Northern Nevada Building & Construction Trade Council Development Corporation's internal control. Accordingly, we do not express an opinion on the effectiveness of Northern Nevada Building & Construction Trade Council Development Corporation's internal control.

A *deficiency in internal control* exists when the design or operation of a control does not allow management or employees, in the normal course of performing their assigned functions, to prevent, or detect and correct, misstatements on a timely basis. A *material weakness* is a deficiency, or a combination of deficiencies, in internal control, such that there is a reasonable possibility that a material misstatement of the entity's financial statements will not be prevented or detected and corrected on a timely basis. A *significant deficiency* is a deficiency, or a combination of deficiencies, in internal control that is less severe than a material weakness, yet important enough to merit attention by those charged with governance.

611 N. Nevada Street
Carson City, Nevada 89703
Phone: (775) 882-7198
Fax: (775) 883-4346

Members of: CPA Connect
Nevada Society of Certified Public Accountants
American Institute of Certified Public Accountants
Affordable Housing Association of Certified Public Accountants

Our consideration of internal control was for the limited purpose described in the first paragraph of this section and was not designed to identify all deficiencies in internal control that might be material weaknesses or significant deficiencies in internal control that we consider to be material weaknesses. However, material weaknesses may exist that have not been identifies.

Compliance and Other Matters

As part of obtaining reasonable assurance about whether Northern Nevada Building & Construction Trade Council Development Corporation's financial statements are free from material misstatement, we performed tests of its compliance with certain provisions of laws, regulations, contracts, and grant agreements, noncompliance with which could have a direct and material effect on the determination of financial statement amounts. However, providing an opinion on compliance with those provisions was not an objective of our audit, and accordingly, we do not express such an opinion. The results of our tests disclosed no instances of noncompliance or other matters that are required to be reported under *Government Auditing Standards.*

Purpose of this Report

The purpose of this report is solely to describe the scope of our testing of internal control and compliance and the results of that testing, and not to provide an opinion on the effectiveness of the organization's internal control or on compliance. This report is an integral part of an audit performed in accordance with *Government Auditing Standards* in considering the organization's internal control and compliance, Accordingly, this communication is not suitable for any other purpose.

Stule Associates, LLC

Carson City, Nevada
July 14, 2021

Jonathan S. Steele, CPA CGMA

Steele
Certified Public Accountants

Vanessa L. Davis, CPA CGMA

INDEPENDENT AUDITOR'S REPORT ON COMPLIANCE FOR EACH MAJOR PROGRAM AND ON INTERNAL CONTROL OVER COMPLIANCE REQUIRED BY THE UNIFORM GUIDANCE

To the Board of Directors of
Northern Nevada Building & Construction
Trade Council Development Corporation
dba Carville Park Apartments
HUD Project No. 125-35077-NP
Reno, Nevada

Report on Compliance for Each Major Federal Program

We have audited Northern Nevada Building & Construction Trade Council Development Corporation, dba Carville Park Apartments' compliance with the types of compliance requirements described in the *OMB Compliance Supplement* that could have a direct and material effect on each of Northern Nevada Building & Construction Trade Council Development Corporation's major federal programs for the year ended March 31, 2021. Northern Nevada Building & Construction Trade Council Development Corporation's major federal programs are identified in the summary of auditor's results section of the accompanying schedule of findings and questioned costs.

Management's Responsibility

Management is responsible for compliance with the requirements of laws, regulations, contracts, and grants applicable to its federal programs.

Auditor's Responsibility

Our responsibility is to express an opinion on compliance for each of Northern Nevada Building & Construction Trade Council Development Corporation's major federal programs based on our audit of the types of compliance requirements referred to above. We conducted our audit of compliance in accordance with auditing standards generally accepted in the United States of America; the standards applicable to financial audits contained in *Governmental Auditing* Standards, issued by the Comptroller General of the United States; and the audit requirements of Title 2 U.S. *Code of Federal Regulations* Part 200, *Uniform Administrative Requirements, Cost Principles, and Audit Requirements for Federal Awards* (Uniform Guidance). Those standards and the Uniform Guidance require that we plan and perform the audit to obtain reasonable assurance about whether noncompliance with the types of compliance requirements referred to above that could have a direct and material effect on a major federal program occurred. An audit includes examining, on a test basis, evidence about Northern Nevada Building & Construction Trade Council Development Corporation's compliance with those requirements and performing such other procedures as we considered necessary in the circumstances.

611 N. Nevada Street
Carson City, Nevada 89703
Phone: (775) 882-7198
Fax: (775) 883-4346

Members of: CPA Connect
Nevada Society of Certified Public Accountants
American Institute of Certified Public Accountants
Affordable Housing Association of Certified Public Accountants

We believe that our audit provides a reasonable basis for our opinion on compliance for each major federal program. However, our audit does not provide a legal determination of Northern Nevada Building & Construction Trade Council Development Corporation's compliance.

Opinion on Each Major Federal Program

In our opinion, Northern Nevada Building & Construction Trade Council Development Corporation complied, in all material respects, with the types of compliance requirements referred to above that could have a direct and material effect on each of its major federal programs for the year ended March 31, 2021.

Report on Internal Control over Compliance

Management of Northern Nevada Building & Construction Trade Council Development Corporation is responsible for establishing and maintaining effective internal control over compliance with the types of compliance requirements referred to above. In planning and performing our audit of compliance, we considered Northern Nevada Building & Construction Trade Council Development Corporation's internal control over compliance with the types of requirements that could have a direct and material effect on each major federal program to determine the auditing procedures that are appropriate in the circumstances for the purpose of expressing an opinion on compliance for each major federal program and to test and report on internal control over compliance in accordance with the Uniform Guidance, but not for the purpose of expressing an opinion on the effectiveness of internal control over compliance. Accordingly, we do not express an opinion on the effectiveness of Northern Nevada Building & Construction Trade Council Development Corporation's internal control over compliance.

A *deficiency in internal control over compliance* exists when the design or operation of a control over compliance does not allow management or employees, in the normal course of performing their assigned functions, to prevent, or detect and correct, noncompliance with a type of compliance requirement of a federal program on a timely basis. A *material weakness in internal control over compliance* is a deficiency, or combination of deficiencies, in internal control over compliance, such that there is a reasonable possibility that material noncompliance with a type of compliance requirement of a federal program will not be prevented, or detected and corrected, on a timely basis. A *significant deficiency in internal control over compliance* is a deficiency, or a combination of deficiencies, in internal control over compliance with a type of compliance requirement of a federal program that is less severe than a material weakness in internal control over compliance, yet important enough to merit attention by those charged with governance.

Our consideration of internal control over compliance was for the limited purpose described in the first paragraph of this section and was not designed to identify all deficiencies in internal control over compliance that might be material weaknesses or significant deficiencies. We did not identify any deficiencies in internal control over compliance that we consider to be material weaknesses. However, material weaknesses may exist that have not been identified.

The purpose of this report on internal control over compliance is solely to describe the scope of our testing of internal control over compliance and the results of that testing based on the requirements of the Uniform Guidance. Accordingly, this report is not suitable for any other purpose.

Stulz : Associates, LLC

Carson City, Nevada
July 14, 2021

Northern Nevada Building & Construction
Trade Council Development Corporation
dba Carville Park Apartments
Schedule of Findings and Questioned Costs
For the Year Ended March 31, 2021

A. Summary of Audit Results

1. The auditor's report expresses an unmodified opinion on whether the financial statements of Northern Nevada Building & Construction Trade Council Development Corporation were prepared in accordance with GAAP.

2. No deficiencies material to the financial statements of Northern Nevada Building & Construction Trade Council Development Corporation were disclosed during the audit. No material weaknesses are reported.

3. No instances of noncompliance material to the financial statement of Northern Nevada Building & Construction Trade Council Development corporation were disclosed during the audit.

4. No deficiencies in internal control over major federal award programs were noted during the audit. No material weaknesses are reported

5. The auditor's report on compliance for the major federal award programs for Northern Nevada Building & Construction Trade Council Development Corporation expresses an unmodified opinion on all major federal programs.

6. Audit findings that are required to be reported in accordance with 2 CFR section 200.516(a) are reported in this Schedule.

7. The program tested as a major program was Section 8 Housing Assistance Payments CFDA#14.182.

8. The threshold for distinguishing Types A and B programs was $750,000.

9. Northern Nevada Building & Construction Trade Council Development corporation was determined to be a low-risk auditee.

Northern Nevada Building & Construction
Trade Council Development Corporation
dba Carville Park Apartments
HUD PROJECT NO. 125-35077-NP

CERTIFICATE OF PROJECT OWNER

We hereby certify that we have examined the accompanying financial statements and supplemental data of Northern Nevada Building & Construction Trade Council Development Corporation, and to the best of our knowledge and belief, the same are accurate and complete.

Date	Russ James, President
Date	Rob Benner, Secretary/Treasurer

Northern Nevada Building & Construction
Trade Council Development Corporation
dba Carville Park Apartments
HUD PROJECT NO. 125-35077-NP

CERTIFICATE OF MANAGING AGENT

We hereby certify that we have examined the accompanying financial statements and supplemental data of Northern Nevada Building & Construction Trade Council Development Corporation and to the best of our knowledge and belief, the same are accurate and complete.

Date

Russ James, President

Building & Construction Trade Council
of Northern Nevada

Management Agent Employer Identification Number 88-0025643

COMMUNICATIONS WITH GOVERNANCE

Jonathan S. Steele, CPA CGMA

Steele
Certified Public Accountants

Vanessa L. Davis, CPA CGMA

To the Board of Directors
Northern Nevada Building & Construction
Trade Council Development Corporation

We have audited the basic financial statements of the Northern Nevada Building & Construction Trad Council Development Corporation for the year ended March 31, 2021, and have issued our report thereon date July 14, 2021. Professional standards require that we provide you with the following information related to our audit.

Our Responsibility under U.S. Generally Accepted Auditing Standards

As stated in our engagement letter dated September 28, 2018, our responsibility as described by professional standards, is to express opinions about whether the financial statements prepared by management with your oversight are fairly presented, in all material respects in conformity with U.S. generally accepted accounting principles. Our audit of the financial statements does not relieve you or management or your responsibilities.

Significant Audit Findings

Qualitative Aspects of Accounting Practices

Management is responsible for the selection and use of appropriate accounting policies. The significant accounting policies used by the Northern Nevada Building & Construction Trade Council Development Corporation are described in the financial statements. No new accounting policies were adopted and the application of existing policies was not changed during the 2020/2021 fiscal year. We noted no transactions entered into by the organization during the year for which there is a lack of authoritative guidance or consensus. There are no significant transactions that have been recognized in the financial statements in a different period than when the transaction occurred.

Accounting estimates are an integral part of the financial statements prepared by management and are based on management's knowledge and experience about past and current events and assumptions about future events. Certain accounting estimates are particularly sensitive because of their significance to the financial statements and because of the possibility that future events affecting them may differ significantly from those expected. The most sensitive estimate affecting the financial statement was management's determination that all accounts receivable are collectible at year end. We evaluated the key factors and assumptions used to develop the estimate of collectability in determining what is reasonable in relation to the financial statements taken as a whole.

611 N. Nevada Street
Carson City, Nevada 89703
Phone: (775) 882-7198
Fax: (775) 883-4346

Members of: CPA Connect
Nevada Society of Certified Public Accountants
American Institute of Certified Public Accountants
Affordable Housing Association of Certified Public Accountants

Difficulties Encountered in Performing the Audit

We encountered no significant difficulties in dealing with management in performing and completing our audit.

Corrected and Uncorrected Misstatements

Professional standards require us to accumulate all known and likely misstatements identified during the audit, other than those that are trivial, and communicate them to the appropriate level of management. Management has corrected all such misstatements. The following material misstatements detected as a result of audit procedures were corrected by management:

1. Record depreciation expense in the amount of $91,548.
2. Capitalize building improvements in the amount of $86,411.
3. Reversal of prior accounts payable of $30,343.

The total net income effect of all adjustments proposed and recorded by management was to increase net income by $35,339.

Disagreements with Management

For purposes of this letter, professional standards define a disagreement with management as a financial accounting, reporting, or auditing matter, whether or not resolved to our satisfaction, that could be significant to the financial statements or the auditor's report. We are pleased to report that no such disagreements arose during the course of our audit.

Management Representations

We have requested certain representations from management that are included in the management representation letter dated July 14, 2021.

Management Consultations with Other Independent Accountants

In some cases, management may decide to consult with other accountants about auditing and accounting matters, similar to obtaining a "second opinion" on certain situations. If a consultation involves application of an accounting principle to the governmental unit's financial statements or a determination of the type of auditor's opinion that may be expressed on those statements, our professional standards require the consulting accountant to check with us to determine that the consultant has all the relevant facts. To our knowledge, there were no such consultations with other accountants.

Other Audit Findings or Issues

We generally discuss a variety of matters, including the application of accounting principles and auditing standards, with management each year prior to retention as the governmental unit's auditors. However, these discussions occurred in the normal course of our professional relationship and our responses were not a condition of our retention.

As required by generally accepted auditing standards and the terms of our engagement, in planning and performing our audit, we considered the internal control solely to determine the auditing procedures to be employed for the purpose of enabling us to express our opinion on the

financial statements and not for the purpose of expressing an opinion on the effectiveness of the District's internal control over financial reporting. Therefore, we express no opinion or other form of assurance thereon.

A deficiency in internal control exists when the design or operation of a control does not allow management or employees, in the normal course of performing their assigned functions, to prevent or detect and correct misstatements on a timely basis. A material weakness is a deficiency, or combination of deficiencies, in internal control such that there is a reasonable possibility that a material misstatement of the entity's financial statements will not be prevented, or detected and corrected on a timely basis. A significant deficiency is a deficiency, or combination of deficiencies in internal control that is less severe than a material weakness, yet important enough to merit attention by those charged with governance. Our report on Internal Control over Financial Reporting and on Compliance and Other Matters Based on an Audit of Financial Statements Performed in Accordance with *Government Auditing Standards* dated July 14, 2021, noted no significant deficiencies or material weaknesses.

This information is intended solely for the use of management and the Organization's Board of Directors and is not intended to be and should not be used by anyone other than these specified parties.

Stubbs & Associates, LLC

Carson City, Nevada
July 14, 2021

EXHIBIT 8C

AUDITED FINANCIAL STATEMENTS

For the fiscal year ending March 31, 2020.

NORTHERN NEVADA BUILDING & CONSTRUCTION
TRADE COUNCIL DEVELOPMENT CORPORATION
dba CARVILLE PARK APARTMENTS
HUD PROJECT NO. 125-35077-NP
FINANCIAL STATEMENTS
AND SUPPLEMENTARY INFORMATION
MARCH 31, 2020

NORTHERN NEVADA BUILDING & CONSTRUCTION
TRADE COUNCIL DEVELOPMENT CORPORATION
dba CARVILLE PARK APARTMENTS
HUD PROJECT NO. 125-35077-NP
FINANCIAL STATEMENTS
AND SUPPLEMENTARY INFORMATION
YEAR ENDED MARCH 31, 2020

TABLE OF CONTENTS

	Page No.
INDEPENDENT AUDITOR'S REPORT	1 - 2
FINANCIAL STATEMENTS	
Statement of Financial Position	3
Statement of Activities	4
Statement of Cash Flows	5 - 6
Notes to Financial Statements	7 - 14
REPORTS REQUIRED BY THE UNIFORM GUIDANCE	
Schedule of Expenditures of Federal Awards	16
INDEPENDENT AUDITOR'S REPORT ON INTERNAL CONTROL OVER FINANCIAL REPORTING AND ON COMPLIANCE AND OTHER MATTERS BASED ON AN AUDIT OF FINANCIAL STATEMENTS PERFORMED IN ACCORDANCE WITH *GOVERNMENT AUDITING STANDARDS*	17 - 18
INDEPENDENT AUDITOR'S REPORT ON COMPLIANCE FOR EACH MAJOR PROGRAM AND ON INTERNAL CONTROL OVER COMPLIANCE REQUIRED BY THE UNIFORM GUIDANCE	19 - 20
SCHEDULE OF FINDINGS AND QUESTIONED COSTS	21
CERTIFICATE OF PROJECT OWNER	22
CERTIFICATE OF MANAGING AGENT	23
COMMUNICATIONS WITH GOVERNANCE	25 - 27

Jonathan S. Steele, CPA CGMA

Steele
Certified Public Accountants

Vanessa L. Davis, CPA CGMA
Benjamin C. Steele, CPA CGMA Emeritus

INDEPENDENT AUDITOR'S REPORT

To the Board of Directors
Northern Nevada Building & Construction
Trade Council Development Corporation
dba Carville Park Apartment
HUD Project No. 125-35077-NP
Reno, Nevada

Report on the Financial Statements

We have audited the accompanying financial statements of Northern Nevada Building & Construction Trade Council Development Corporation (a nonprofit organization), dba Carville Park Apartments, HUD Project No. 125-35077-NP, which comprise the statement of financial position as of March 31, 2020, and the related statements of activities and cash flows for the year then ended, and the related notes to the financial statements.

Management's Responsibility for the Financial Statements

Management is responsible for the preparation and fair presentation of these financial statements in accordance with accounting principles generally accepted in the United States of America; this includes the design, implementation, and maintenance of internal control relevant to the preparation and fair presentation of financial statements that are free from material misstatement, whether due to fraud or error.

Auditor's Responsibility

Our responsibility is to express an opinion on these financial statements based on our audit. We conducted our audit in accordance with auditing standards generally accepted in the United States of America and the standards applicable to financial audits contained in *Government Auditing Standards*, issued by the Comptroller General of the United States. Those standards require that we plan and perform the audit to obtain reasonable assurance about whether the financial statements are free of material misstatement.

An audit involves performing procedures to obtain audit evidence about the amounts and disclosures in the financial statements. The procedures selected depend on the auditor's judgment, including the assessment of the risks of material misstatement of the financial statements whether due to fraud or error. In making those risk assessments, the auditor considers internal control relevant to the entity's preparation and fair presentation of the financial statements in order to design audit procedures that are appropriate in the circumstances, but not for the purpose of expressing an opinion on the effectiveness of the entity's internal control. Accordingly, we express no such opinion. An audit also includes evaluating the appropriateness of accounting policies used and the reasonableness of significant accounting estimates made by management, as well as evaluating the overall presentation of the financial statements.

611 N. Nevada Street
Carson City, Nevada 89703
Phone: (775) 882-7198
Fax: (775) 883-4346

Members of: CPA Connect
Nevada Society of Certified Public Accountants
American Institute of Certified Public Accountants
Affordable Housing Association of Certified Public Accountants

We believe that the audit evidence we have obtained is sufficient and appropriate to provide a basis for our audit opinion.

Opinion

In our opinion, the financial statements referred to above present fairly, in all material respects, the financial position of Northern Nevada Building & Construction Trad Council Development Corporation, dba Carville Park apartments, as of March 31, 2020, and the changes in its net assets and its cash flows for the year then ended in accordance with accounting principles generally accepted in the United States of America.

Other Matter

Other Information

Our audit was conducted for the purpose of forming an opinion on the financial statements as a whole. The accompanying schedule of expenditures of federal awards, as required by Title 2 U.S. *Code of Federal Regulations* Part 200, *Uniform Administrative Requirements, Cost Principles, and Audit Requirements for Federal Awards,* is presented for purposes of additional analysis and is not a required part of the financial statements. Such information is the responsibility of management and was derived from and relates directly to the underlying accounting and other records used to prepare the financial statements. The information has been subjected to the auditing procedures applied in the audit of the financial statements and certain additional procedures, including comparing and reconciling such information directly to the underlying accounting and other records used to prepare the financial statements or to the financial statements themselves, and other additional procedures in accordance with auditing standards generally accepted in the United States of America. In our opinion, the information is fairly stated in all material respects in relation to the financial statements as a whole.

Other Reporting Required by *Government Auditing Standards*

In accordance with *Government Auditing Standards*, we have also issued our report dated July 16, 2020, on our consideration of Northern Nevada Building & Construction Trade Council Development Corporation, dba Carville Park Apartments' internal control over financial reporting and on our tests of its compliance with certain provisions of laws, regulations, contracts, and grant agreements and other matters. The purpose of that report is to describe the scope of our testing of internal control over financial reporting and compliance and the results of that testing, and not to provide an opinion on internal control over financial reporting or on compliance. That report is an integral part of an audit performed in accordance with *Government Auditing Standards* in considering Northern Nevada Building & Construction Trade Council Development Corporation's internal control over financial reporting and compliance.

Carson City, Nevada
July 16, 2020

Northern Nevada Building & Construction
Trade Council Development Corporation
dba Carville Park Apartments
Statement of Financial Position
March 31, 2020

ASSETS		
CURRENT ASSETS		
Cash and Equivalents	$	172,820
Accounts Receivable (Net of Allowance for Doubtful Accounts of $9,422)		9,801
Prepaid Expenses		46,706
Due from Related Party		63,730
TOTAL CURRENT ASSETS		293,057
PROPERTY AND EQUIPMENT		
Furniture and Equipment		841,125
Buildings and Improvements		2,542,373
Land and Improvements		1,292,464
		4,675,962
Less Accumulated Depreciation		(3,748,134)
TOTAL PROPERTY AND EQUIPMENT		927,828
OTHER ASSETS		
Tenant Deposits Held in Trust		34,968
Certificates of Deposit		26,932
Reserve for Replacements		26,694
TOTAL OTHER ASSETS		88,594
TOTAL ASSETS	$	1,309,479
LIABILITIES AND NET ASSETS		
CURRENT LIABILITIES		
Accounts Payable	$	56,227
Accrued Liabilities		626
Tenant Security Deposits		27,962
Prepaid Rents		17,128
TOTAL CURRENT LIABILITIES/TOTAL LIABILITIES		101,943
NET ASSETS		
Net Assets without Donor Restrictions		1,207,536
Net Assets with Donor Restrictions		-
TOTAL NET ASSETS		1,207,536
TOTAL LIABILITIES AND NET ASSETS	$	1,309,479

See Accompanying Independent Auditor's Report & Notes to Financial Statements

Northern Nevada Building & Construction
Trade Council Development Corporation
dba Carville Park Apartments
Statement of Activities
For the Year Ended March 31, 2020

REVENUES		
Rental	$	1,359,760
Interest Income		798
Tenant Charges		10,405
Laundry, Vending, and Miscellaneous		9,007
TOTAL REVENUE		1,379,970
EXPENSES		
Program Services		
Administrative		104,650
Utilities		177,819
Operating and Maintenance		478,910
Taxes and Insurance		144,751
Insurance and Employee Benefits		84,827
Depreciation		120,927
		1,111,884
Supporting Activities		
Management Fees		117,312
Office Salaries		44,170
Office Expenses		28,739
		190,221
TOTAL EXPENSES		1,302,105
CHANGE IN NET ASSETS WITHOUT DONOR RESTRICTIONS		77,865
NET ASSETS WITHOUT DONOR RESTRICTIONS, MARCH 31, 2019		1,129,671
NET ASSETS WITHOUT DONOR RESTRICTIONS, MARCH 31, 2020	$	1,207,536

See Accompanying Independent Auditor's Report & Notes to Financial Statements

Northern Nevada Building & Construction
Trade Council Development Corporation
dba Carville Park Apartments
Statement of Cash Flows
For the Year Ended March 31, 2020

CASH FLOWS FROM OPERATING ACTIVITIES		
Rental Receipts	$	1,362,102
Interest Receipts		798
Other Receipts		20,227
Administrative Expenses Paid		(57,449)
Management Fees Paid		(117,312)
Utilities Expenses Paid		(177,819)
Salaries and Wages Paid		(257,005)
Operating and Maintenance Expenses Paid		(328,943)
Real Estate Taxes Paid		(63,292)
Property Insurance Paid		(60,943)
Miscellaneous Taxes and Insurance Paid		(108,284)
NET CASH USED BY OPERATING ACTIVITIES		212,080
CASH FLOWS FROM INVESTING ACTIVITIES		
Interest Reinvested in CD		(423)
Acquisition of Property and Equipment		(103,992)
NET CASH PROVIDED BY INVESTING ACTIVITIES		(104,415)
NET INCREASE (DECREASE) IN CASH AND CASH EQUIVALENTS		107,665
CASH, CASH EQUIVALENTS AND RESTRICTED CASH MARCH 31, 2019		126,817
CASH, CASH EQUIVALENTS AND RESTRICTED CASH MARCH 31, 2020	$	234,482

Northern Nevada Building & Construction
Trade Council Development Corporation
dba Carville Park Apartments
Statement of Cash Flows
For the Year Ended March 31, 2020

RECONCILIATION OF CHANGE IN NET ASSETS TO NET CASH USED BY OPERATING ACTIVITIES		
Decrease in Net Assets	$	77,865
Adjustments to Reconcile Increase (Decrease) in Net Assets to Net Cash Used By Operating Activities		
Depreciation Expense		120,927
(Increase) decrease in:		
Accounts Receivable		(22)
Prepaid Expenses		(3,065)
(Decrease) increase in:		
Accounts Payable		13,575
Accrued Liabilities		(380)
Prepaid Rents		2,365
Tenant Security Deposits		815
NET CASH USED BY OPERATING ACTIVITIES	$	212,080

See Accompanying Accountant's Audit Report & Notes to Financial Statements

Northern Nevada Building & Construction
Trade Council Development Corporation
dba Carville Park Apartments
Notes to Financial Statements
March 31, 2020

NOTE 1 – SUMMARY OF SIGNIFICANT ACCOUNTING POLICIES

1. Business Activity

   The Corporation was formed as a non-profit corporation under the laws of the State of Nevada on April 6, 1979. It was organized to construct, own, and operate a 208-unit rental apartment project in Reno, Nevada, knows as Carville Park Apartments.

   The Project is regulated by the U.S. Department of Housing and Urban Development (HUD) as to rent charges and operating methods. Lower rental charges to tenants are recovered by the Project through rent subsidies provided by HUD. The Section 8 program is a major HUD program.

2. Accounting Methods and Revenue Recognition

   The Project's primary revenue stream is rent charges for residential units under leases with durations of less than one year. The Project records revenue for such leases at gross potential rent as prescribed by HUD. The rental value of vacancies and other concessions are stated separately to present net rental income on the accrual basis. Subsidy revenue for low-income eligible tenants is provided under a Section 8 housing assistance payment contract. This contract requires tenants to contribute a portion of the contract rent based on formulas prescribed by the Department of Housing and Urban Development (HUD). The difference from the calculated subsidy and the contract rent is paid by the HUD. The current contract expires on October 31, 2023.

   Subsidy income is considered part of the lease and is not considered a contribution under ASC 958. This standard indicates that government payments to specifically identified participants are to be considered exchange transactions and potentially subject to ASC 606. The Project believes that both rental and subsidy income streams are exempted from compliance with ASC 606 due to their inclusion under current and future lease standards. Revenue streams subject to ASC 606 include: laundry, vending, pet and parking fees as well as damages. Such fees are ancillary to the lease process and are recognized as revenue at the point in time such fees are incurred.

3. Classification of Net Assets

   Net assets of the Project are classified based on the presence or absence of donor-imposed restrictions. Net assets are comprised of two groups as follows:

   Net Assets without Donor Restrictions – Amounts that are not subject to usage restrictions based on donor-imposed requirements. This class also includes assets previously restricted where restrictions have been men.

NOTE 1 - SUMMARY OF SIGNIFICANT ACCOUNTING POLICIES (CONTINUED)

3. Classification of Net Assets (Continued)

Net assets with Donor Restrictions – Assets subject to usage limitations based on donor-imposed or grantor restrictions. These restrictions may be temporary or may be based on a particular use. Restrictions may be met by the passage of time or by actions of the Project. Certain restrictions may need to be maintained in perpetuity.

Earnings related to restricted net assets will be included in net assets without donor-restrictions unless otherwise specifically required to be included in donor-restricted net assets by the donor or by applicable state law.

The Project does not interpret the guidance in the standard to include amounts restricted by HUD as donor-restricted. The project believes that these amounts do not meet the spirit of the standard for such a classification or is there any industry standard indicating that others will treat these assets as donor-restricted.

All net assets of the Project at March 31, 2020 were considered to be net assets without donor restrictions.

4. Property and Equipment

Property and equipment are carried at cost or, if donated, at the approximate fair value at the date of donation. Fixed asset acquisitions in excess of $500 are capitalized and depreciation is provided using the straight-line method over the estimated useful lives of the buildings and related land improvements (15 – 40 years) and furnishings and equipment (5 – 7 years). Depreciation expense for the year ended March 31, 2020, was $120,927.

5. Cash and Cash Equivalents

For purposes of the Statement of Cash Flows, the Project considers all unrestricted highly liquid investments purchased with original maturities of three months or less to be cash equivalents. At March 31, 2020, there were no cash equivalents.

Restricted cash consists of Tenant security deposits held in trust and reserves for replacements.

NOTE 1 – SUMMARY OF SIGNIFICANT ACCOUNTING POLICIES (CONTINUED)

6. Estimates

   The preparation of financial statements in conformity with generally accepted accounting principles requires management to make estimates and assumptions that affect the reported amounts of assets and liabilities and disclosure of contingent assets and liabilities at the date of the financial statements and the reported amounts of revenue and expenses during the reporting period. Actual results could differ from those estimates.

7. Investments

   Investments in marketable securities with readily determinable fair values and all investments in debt securities are reported at their fair values in the statements of financial position. Unrealized gains and losses are included in the statement of activities.

8. Concentrations of Credit Risk

   Financial instruments that potentially subject the Project to concentrations of credit risk consist principally of cash in banks, investment accounts, and tenant accounts receivable.

   The Project has funds in credit union accounts which are insured by the National Credit Union Association (NCUA) up to $250,000. On March 31, 2020, the Project's credit union account balances exceeded the NCUA insured balance by $6,378.

   The Project maintains its reserve funds in investment institutions. The investments that the Project holds consist of money market funds. The funds are insured by the Securities Investor Protection Corporation for the amount invested in the event of fraud, theft, or other such deceptive activity.

   Concentrations of credit risk with respect to tenant accounts receivable are limited because all tenants are required to pay their rent monthly on the first of the month. However, since all of the Project's tenants live and work in the Northern Nevada area, the Project's ability to collect tenant accounts receivable may be affected by economic fluctuations in that geographic area.

   The Project's primary asset is a 208-unit apartment project. The Project's operations are concentrated in the multifamily real estate market. In addition, the Project operates in a heavily regulated environment. The operations of the Project are subject to the administrative directives, rules and regulations of federal, state and local regulatory agencies, including, but not limited to, HUD. Such administrative directives, rules and regulations are subject to change by an act of congress or an administrative change mandated by HUD. Such changes may occur with little notice or inadequate funding to pay for the related cost, including the additional administrative burden, to comply with a change.

NOTE 1 - SUMMARY OF SIGNIFICANT ACCOUNTING POLICIES (CONTINUED)

9. Bad Debts

   Uncollectible accounts receivable are charged directly against operations when they are determined to be uncollectible. Use of this method does not result in a material difference from the valuation method required by generally accepted accounting principles.

10. Impairment of Long-Loved Assets

    The Organization reviews long-lived assets, including property and equipment and intangible assets, for impairment whenever events or changes in business circumstances indicate that the carrying amount of an asset may not be fully recoverable. An impairment loss would be recognized when the estimated future cash flows from the use of the asset are less than the carrying amount of that asset. To date, there have been no such losses.

11. Advertising and Marketing

    Advertising and marketing costs are expensed as incurred. Advertising expense totaled $2,554 for the year ended March 31, 2020.

12. Income Taxes

    The Project is a nonprofit corporation that is exempt from federal income taxes under Section 501(c)(3) of the Internal Revenue Code. Accordingly, no liability for federal income taxes has been provided in the financial statements. It is the Project's tax position that it has not engaged in activities that would jeopardize its exempt status nor has it engaged in activities that would result in unrelated business income tax. The Project's Forms 990, *Return of Organization Exempt from Income Tax*, for the tax years ending 2017, 2018 and 2019 are subject to examination by the IRS, generally for three years after they were filed.

13. Subsequent Events

    In preparing these financial statements, the Project has evaluated events and transactions for potential recognition or disclosure through July 16, 2020, the date the financial statements were available to be issued. Subsequent events after that date have not been evaluated.

NOTE 2 – ALLOWABLE DISTRIBUTIONS

In accordance with HUD Handbook 4370.2 REV-1, CHG-1, *Financial Operations and Accounting Procedures for Insured Multifamily Projects,* page 2 – 12, distributions to owners are not permitted on non-profit projects. For the year ended March 31, 2020, there were no distributions made.

NOTE 3 – CASH, RESTRICTED DEPOSITS AND EQUIVALENTS

The balance in cash, cash equivalents, restricted deposits and restricted deposit equivalents consists of the following:

Operating Cash	$ 172,820
Restricted Deposits - Security Deposits	34,968
Restricted Deposits - Reserve for Replacement	26,694
Total Cash, Restricted Cash and Equivalents	$ 234,482

NOTE 4 – ADOPTION OF ACCOUNTING PRONOUNCEMENT

In November 2016 the Financial Accounting Standards Board (FASB) published Accounting Standards Update (ASU) No. 2016-18, which changes the presentation and disclosure of cash, cash equivalents and restricted cash or restricted equivalents (Cash) in the statement of cash flows. The standard requires that change in all Cash when reconciling the beginning and ending cash balances shown on the statement of cash flows. The standard does not change the definitions of restricted cash or restricted cash equivalents. Previous U.S. GAAP allowed changes in the restricted cash to be shown as investing activities.

In June 2018, FASB issued ASU 2018-08, to improve the scope and accounting guidance for contributions received and contributions made. The standard should be used to assist entities in 1) evaluating whether transactions should be accounted for as contributions or as other exchange guidance subject to other guidance. This standard establishes that Section 8 payments, although not a result of a reciprocal transaction, but they are to be considered as exchange transactions.

In May 2014, FASB issued ASU 2014-09, *Revenue from Contracts with Customers (ASC 606)* and all related amendments. ASC 606 supersedes most existing revenue recognition guidance. ASC 606 provides a principles-based framework for recognizing revenue to depict the transfer of promised goods or services to customers in an amount that reflects the consideration the entity expects in exchange for the goods or services provided. It also requires enhanced disclosures to enable users of financial statement to understand the nature, amount, timing, and uncertainty of revenue and cash flows arising from contracts with customers. The Project adopted ASC 606 and all related amendments using the modified retrospective transition method. The Project concluded that the adoption of the new standard did not require an adjustment to the opening net asset balance.

NOTE 5 – LIQUIDITY

At March 31, 2020, the Project has $182,621 cash and equivalents available to meet needs for general expenditures consisting of cash of $172,820 and $9,801 of accounts receivable. None of the financial assets are subject to donor or other contractual restrictions. Accordingly, all such funds are available to meet the cash needs of the project in the next 12 months. In addition, the Project may maintain funds in a reserve for replacements. These funds are used for the benefit of the tenants and/or Project. Such funds are not considered by the Project to have donor-restrictions.

The Project manages its liquidity by developing and adopting annual operating budgets that provide sufficient funds for general expenditures in meeting its liabilities and other obligations as they become due. Cash needs of the Project are expected to be met on a monthly basis from the rents of project units. In general, the Project maintains sufficient financial assets on hand to meet 30 days' worth of normal operating expenses.

NOTE 6 – FUNCTIONAL EXPENSES

The Project provides low-income housing to its tenants. The cost of providing program services and supporting activities has been summarized on a functional basis in the table below. Expenses directly attributable to a specific functional activity of the Project are reported as expenses of those functional activities. Allocations of expenses were made on a direct allocation basis.

	Program Services	Supporting Activities	
FASSUB Line Items	Rental Operations	Management and General	Total Expenses
Payroll and benefits	$ 297,282	$ 44,170	$ 341,452
Administrative	41,307	28,739	70,046
Management fee		117,312	117,312
Utilities	177,819		177,819
Repairs and maintenance	302,430		302,430
Taxes and insurance	144,751		144,751
Other	27,368		27,368
Depreciation	120,927		120,927
Totals	$1,111,884	$ 190,221	$1,302,105

NOTE 7 – RELATED PARTY TRANSACTIONS

Transactions involving related parties cannot be presumed to be carried out on an arm's-length basis. Except for routine transactions, it is generally not possible to determine whether a particular transaction would have taken place if the parties had not been related or, assuming it would have taken place, what the terms and manner of settlement would have been.

Effective November 1, 1987, management of the Project was provided by the Building and Construction Trades Council of Northern Nevada, a non-profit corporation which elects the Board of Directors of the Northern Nevada Building & Construction Trade Council Development Corporation, dba Carville Park Apartments. The management fee is $47 per unit per month for a total paid of $117,312 during the year ended March 31, 2020.

During the 2008 and 2009 fiscal years, the owners placed the property up for sale. During those two years, $72,630 was paid by the Project for various costs associated with the sale. These expenditures are an entity expense not a project expense and, as such, constitute an unauthorized distribution to the Project Owner. Therefore, the Owner is required to reimburse the Project for these expenditures. The amount is recorded as due from related party in the statement of financial position. During the year ended March 31, 2020, no payments were made on this receivable, leaving a balance due of $63,730.

NOTE 8 – PENSION CONTRIBUTIONS

In connection with its collective bargaining agreement with the Communication Workers of America, AFL-CIO, the company participates with other companies in the communication industry in a defined benefit pension plan. The plan covers all of the company's employees who are members of the Communication Workers of America Union. The pension contribution expense for the year ended March 31, 2020, was $36,945.

NOTE 9 – HOUSING ASSISTANCE PAYMENTS

Pursuant to Section 8 of Title II of the United States Housing Act of 1973, as amended, rents are subsidized by governmental payments through a housing assistance contract between the United States Department of Housing and Urban Development (HUD) and the Organization. The Partnership receives subsidies for 208 apartments which are rented to qualified low and very low income families in an amount which equals the difference between the Contract Rent, as determined by HUD, and 30% of the tenant's family income. The contract expires October 31, 2023.

NOTE 6 – HOUSING ASSISTANCE PAYMENTS (CONTINUED)

In addition, the HAP contract provides that the Corporation is entitled to Section 8 Subsidies in the amount of 80% of the Contract Rents for vacant apartments for a period not to exceed thirty days. Housing assistance payments received totaled $840,301 for the year ended March 31, 2020.

NOTE 10 – LEASE TRANSACTIONS

The Organization entered into a five year lease agreement, commencing October 1, 2018, for the use of a copy systems for $57 per month. The lease also provides for sales tax and per copy charges which vary according to usage in addition to the monthly fee. The lease expense amounted to $832 for the year ended March 31, 2020.

Future obligations over the terms of the operating lease are as follows:

Year Ending March 31,	
2020	$ 2,612
2021	2,612
2022	2,612
2023	2,612
2024 and Thereafter	2,612
	$ 13,060

NOTE 11 – SUBSEQUENT EVENTS

In December 2019, an outbreak of a novel strain of coronavirus (COVID-19) originated in Wuhan, China and has since spread to other countries, including the U.S. On March 11, 2020, the World Health Organization characterized COVID-19 as a pandemic. In addition, multiple jurisdictions in the U.S. have declared a state of emergency. It is anticipated that these impacts will continue for some time. There has been no immediate impact to the Project's operations. Future potential impacts may include disruptions or restrictions on our employees' ability to work or the tenants ability to pay the required monthly rent. Operating functions that may be changed include intake, recertifications and maintenance. Changes to the operating environment may increase operating costs. Additional impacts may include the ability of tenants to continue making rental payments as a result of job loss or other pandemic related issues. The existing HAP contract with HUD could potentially mitigate the tenant collection losses incurred. The future effects of these issues are unknown.

Northern Nevada Building & Construction
Trade Council Development Corporation
dba Carville Park apartments
March 31, 2020

REPORTS REQUIRED BY THE UNIFORM GUIDANCE

Northern Nevada Building & Construction
Trade Council Development Corporation
dba Carville Park Apartments
Schedule of Expenditures of Federal Awards
For the Year ended March 31, 2020

FEDERAL GRANTOR/PASS-THROUGH GRANTOR/PROGRAM TITLE	FEDERAL CFDA NUMBER	FEDERAL EXPENDITURES
U.S. Department of Housing and Urban Development		
Section 8 Housing Assistance Payments	14.182	$ 928,017
Total Expenditures of Federal Awards		$ 928,017

Note 1 – Basis of Presentation

The accompanying schedule of expenditures of federal awards (the Schedule) includes the federal award activity of Northern Nevada Building & Construction Trade Council Development Corporation, dba Carville Park Apartments, HUD Project No. 125-35077-NP, under programs of the federal government for the year ended March 31, 2020. The information in this Schedule is presented in accordance with the requirements of Title 2 U.S. *Code of Federal Regulations* Part 200, *Uniform Administrative Requirements, Cost Principles, and Audit Requirements for Federal Awards* (Uniform Guidance). Because the Schedule presents only a selected portion of the operations of Northern Nevada Building & Construction Trade Council Development Corporation, it is not intended to and does not present the financial position, changes in net assets, or cash flows of Northern Nevada Building & Construction Trade Council Development Corporation.

Note 2 – Summary of Significant Accounting Policies

A. Expenditures reported on the schedule are reported on the accrual basis of accounting. Such expenditures are recognized following the cost principles contained in the Uniform Guidance, wherein certain types of expenditures are not allowable or are limited as to reimbursement.

B. The Project did not receive Federal Financial Assistance in the form of loans or loan guarantees, or in the form of endowment funds.

C. The schedule does not include matching expenditures.

D. Pass-through entity identifying numbers are presented where available.

Jonathan S. Steele, CPA CGMA

Steele
Certified Public Accountants

Vanessa L. Davis, CPA CGMA
Benjamin C. Steele, CPA CGMA Emeritus

INDEPENDENT AUDITOR'S REPORT ON INTERNAL CONTROL OVER FINANCIAL REPORTING AND ON COMPLIANCE AND OTHER MATTERS BASED ON AN AUDIT OF FINANCIAL STATEMENTS PERFORMED IN ACCORDANCE WITH *GOVERNMENT AUDITING STANDARDS*

To the Board of Directors of
Northern Nevada building & Construction
Trade Council Development Corporation
dba Carville Park Apartment
HUD Project No. 125-35077-NP
Reno, Nevada

We have audited, in accordance with the auditing standards generally accepted in the United States of America and the standards applicable to Financial audits contained in *Government Auditing Standards* issued by the Comptroller General of the United States, the financial statements of Northern Nevada Building & Construction Trade Council Development Corporation (a nonprofit organization), dba Carville Park Apartment, HUD Project No. 125-35077-NP, which comprise the statement of financial position as of March 31, 2020, and the related statements of activities and cash flows for the year then ended, and the related notes to the financial statements, and have issued our report thereon dated July 16, 2020.

Internal Control over Financial Reporting

In planning and performing our audit of the financial statements, we considered Northern Nevada Building & Construction Trade Council Development Corporation's internal control over financial reporting (internal control) to determine the audit procedures that are appropriate in the circumstances for the purpose of expressing our opinion on the financial statements, but not for the purpose of expressing an opinion on the effectiveness of Northern Nevada Building & Construction Trade Council Development Corporation's internal control. Accordingly, we do not express an opinion on the effectiveness of Northern Nevada Building & Construction Trade Council Development Corporation's internal control.

A *deficiency in internal control* exists when the design or operation of a control does not allow management or employees, in the normal course of performing their assigned functions, to prevent, or detect and correct, misstatements on a timely basis. A *material weakness* is a deficiency, or a combination of deficiencies, in internal control, such that there is a reasonable possibility that a material misstatement of the entity's financial statements will not be prevented or detected and corrected on a timely basis. A *significant deficiency* is a deficiency, or a combination of deficiencies, in internal control that is less severe than a material weakness, yet important enough to merit attention by those charged with governance.

611 N. Nevada Street
Carson City, Nevada 89703
Phone: (775) 882-7198
Fax: (775) 883-4346

Members of: CPA Connect
Nevada Society of Certified Public Accountants
American Institute of Certified Public Accountants
Affordable Housing Association of Certified Public Accountants

Our consideration of internal control was for the limited purpose described in the first paragraph of this section and was not designed to identify all deficiencies in internal control that might be material weaknesses or significant deficiencies in internal control that we consider to be material weaknesses. However, material weaknesses may exist that have not been identifies.

Compliance and Other Matters

As part of obtaining reasonable assurance about whether Northern Nevada Building & Construction Trade Council Development Corporation's financial statements are free from material misstatement, we performed tests of its compliance with certain provisions of laws, regulations, contracts, and grant agreements, noncompliance with which could have a direct and material effect on the determination of financial statement amounts. However, providing an opinion on compliance with those provisions was not an objective of our audit, and accordingly, we do not express such an opinion. The results of our tests disclosed no instances of noncompliance or other matters that are required to be reported under *Government Auditing Standards.*

Purpose of this Report

The purpose of this report is solely to describe the scope of our testing of internal control and compliance and the results of that testing, and not to provide an opinion on the effectiveness of the organization's internal control or on compliance. This report is an integral part of an audit performed in accordance with *Government Auditing Standards* in considering the organization's internal control and compliance, Accordingly, this communication is not suitable for any other purpose.

Carson City, Nevada
July 16, 2020

Jonathan S. Steele, CPA CGMA

Steele
Certified Public Accountants

Vanessa L. Davis, CPA CGMA
Benjamin C. Steele, CPA CGMA Emeritus

INDEPENDENT AUDITOR'S REPORT ON COMPLIANCE FOR EACH MAJOR PROGRAM AND ON INTERNAL CONTROL OVER COMPLIANCE REQUIRED BY THE UNIFORM GUIDANCE

To the Board of Directors of
Northern Nevada Building & Construction
Trade Council Development Corporation
dba Carville Park Apartments
HUD Project No. 125-35077-NP
Reno, Nevada

Report on Compliance for Each Major Federal Program

We have audited Northern Nevada Building & Construction Trade Council Development Corporation, dba Carville Park Apartments' compliance with the types of compliance requirements described in the *OMB Compliance Supplement* that could have a direct and material effect on each of Northern Nevada Building & Construction Trade Council Development Corporation's major federal programs for the year ended March 31, 2020. Northern Nevada Building & Construction Trade Council Development Corporation's major federal programs are identified in the summary of auditor's results section of the accompanying schedule of findings and questioned costs.

Management's Responsibility

Management is responsible for compliance with the requirements of laws, regulations, contracts, and grants applicable to its federal programs.

Auditor's Responsibility

Our responsibility is to express an opinion on compliance for each of Northern Nevada Building & Construction Trade Council Development Corporation's major federal programs based on our audit of the types of compliance requirements referred to above. We conducted our audit of compliance in accordance with auditing standards generally accepted in the United States of America; the standards applicable to financial audits contained in *Governmental Auditing* Standards, issued by the Comptroller General of the United States; and the audit requirements of Title 2 U.S. *Code of Federal Regulations* Part 200, *Uniform Administrative Requirements, Cost Principles, and Audit Requirements for Federal Awards* (Uniform Guidance). Those standards and the Uniform Guidance require that we plan and perform the audit to obtain reasonable assurance about whether noncompliance with the types of compliance requirements referred to above that could have a direct and material effect on a major federal program occurred. An audit includes examining, on a test basis, evidence about Northern Nevada Building & Construction Trade Council Development Corporation's compliance with those requirements and performing such other procedures as we considered necessary in the circumstances.

611 N. Nevada Street
Carson City, Nevada 89703
Phone: (775) 882-7198
Fax: (775) 883-4346

Members of: CPA Connect
Nevada Society of Certified Public Accountants
American Institute of Certified Public Accountants
Affordable Housing Association of Certified Public Accountants

We believe that our audit provides a reasonable basis for our opinion on compliance for each major federal program. However, our audit does not provide a legal determination of Northern Nevada Building & Construction Trade Council Development Corporation's compliance.

Opinion on Each Major Federal Program

In our opinion, Northern Nevada Building & Construction Trade Council Development Corporation complied, in all material respects, with the types of compliance requirements referred to above that could have a direct and material effect on each of its major federal programs for the year ended March 31, 2020.

Report on Internal Control over Compliance

Management of Northern Nevada Building & Construction Trade Council Development Corporation is responsible for establishing and maintaining effective internal control over compliance with the types of compliance requirements referred to above. In planning and performing our audit of compliance, we considered Northern Nevada Building & Construction Trade Council Development Corporation's internal control over compliance with the types of requirements that could have a direct and material effect on each major federal program to determine the auditing procedures that are appropriate in the circumstances for the purpose of expressing an opinion on compliance for each major federal program and to test and report on internal control over compliance in accordance with the Uniform Guidance, but not for the purpose of expressing an opinion on the effectiveness of internal control over compliance. Accordingly, we do not express an opinion on the effectiveness of Northern Nevada Building & Construction Trade Council Development Corporation's internal control over compliance.

A *deficiency in internal control over compliance* exists when the design or operation of a control over compliance does not allow management or employees, in the normal course of performing their assigned functions, to prevent, or detect and correct, noncompliance with a type of compliance requirement of a federal program on a timely basis. A *material weakness in internal control over compliance* is a deficiency, or combination of deficiencies, in internal control over compliance, such that there is a reasonable possibility that material noncompliance with a type of compliance requirement of a federal program will not be prevented, or detected and corrected, on a timely basis. A *significant deficiency in internal control over compliance* is a deficiency, or a combination of deficiencies, in internal control over compliance with a type of compliance requirement of a federal program that is less severe than a material weakness in internal control over compliance, yet important enough to merit attention by those charged with governance.

Our consideration of internal control over compliance was for the limited purpose described in the first paragraph of this section and was not designed to identify all deficiencies in internal control over compliance that might be material weaknesses or significant deficiencies. We did not identify any deficiencies in internal control over compliance that we consider to be material weaknesses. However, material weaknesses may exist that have not been identified.

The purpose of this report on internal control over compliance is solely to describe the scope of our testing of internal control over compliance and the results of that testing based on the requirements of the Uniform Guidance. Accordingly, this report is not suitable for any other purpose.

Carson City, Nevada
July 16, 2020

Northern Nevada Building & Construction
Trade Council Development Corporation
dba Carville Park Apartments
Schedule of Findings and Questioned Costs
For the Year Ended March 31, 2020

A. Summary of Audit Results

1. The auditor's report expresses an unmodified opinion on whether the financial statements of Northern Nevada Building & Construction Trade Council Development Corporation were prepared in accordance with GAAP.

2. No deficiencies material to the financial statements of Northern Nevada Building & Construction Trade Council Development Corporation were disclosed during the audit. No material weaknesses are reported.

3. No instances of noncompliance material to the financial statement of Northern Nevada Building & Construction Trade Council Development corporation were disclosed during the audit.

4. No deficiencies in internal control over major federal award programs were noted during the audit. No material weaknesses are reported

5. The auditor's report on compliance for the major federal award programs for Northern Nevada Building & Construction Trade Council Development Corporation expresses an unmodified opinion on all major federal programs.

6. Audit findings that are required to be reported in accordance with 2 CFR section 200.516(a) are reported in this Schedule.

7. The program tested as a major program was Section 8 Housing Assistance Payments CFDA#14.182.

8. The threshold for distinguishing Types A and B programs was $750,000.

9. Northern Nevada Building & Construction Trade Council Development corporation was determined to be a low-risk auditee.

Northern Nevada Building & Construction
Trade Council Development Corporation
dba Carville Park Apartments
HUD PROJECT NO. 125-35077-NP

CERTIFICATE OF PROJECT OWNER

We hereby certify that we have examined the accompanying financial statements and supplemental data of Northern Nevada Building & Construction Trade Council Development Corporation, and to the best of our knowledge and belief, the same are accurate and complete.

Date	Russ James, President
Date	Rob Benner, Secretary/Treasurer

Northern Nevada Building & Construction
Trade Council Development Corporation
dba Carville Park Apartments
HUD PROJECT NO. 125-35077-NP

CERTIFICATE OF MANAGING AGENT

We hereby certify that we have examined the accompanying financial statements and supplemental data of Northern Nevada Building & Construction Trade Council Development Corporation and to the best of our knowledge and belief, the same are accurate and complete.

Date

Russ James, President

Building & Construction Trade Council
of Northern Nevada

Management Agent Employer Identification Number 88-0025643

COMMUNICATIONS WITH GOVERNANCE

Jonathan S. Steele, CPA CGMA

Steele
Certified Public Accountants

Vanessa L. Davis, CPA CGMA
Benjamin C. Steele, CPA CGMA Emeritus

To the Board of Directors
Northern Nevada Building & Construction
Trade Council Development Corporation

We have audited the basic financial statements of the Northern Nevada Building & Construction Trad Council Development Corporation for the year ended March 31, 2020, and have issued our report thereon date July 16, 2020. Professional standards require that we provide you with the following information related to our audit.

Our Responsibility under U.S. Generally Accepted Auditing Standards

As stated in our engagement letter dated September 28, 2018, our responsibility as described by professional standards, is to express opinions about whether the financial statements prepared by management with your oversight are fairly presented, in all material respects in conformity with U.S. generally accepted accounting principles. Our audit of the financial statements does not relieve you or management or your responsibilities.

Significant Audit Findings

Qualitative Aspects of Accounting Practices

Management is responsible for the selection and use of appropriate accounting policies. The significant accounting policies used by the Northern Nevada Building & Construction Trade Council Development Corporation are described in the financial statements. During the 2019/2020 fiscal year the Organization adopted Accounting Standards Update No. 2016-18 with regard to the presentation of cash in the statement of cash flows; Accounting Standards Update 2018-08 regarding contributions; and Accounting Standards Update No 2014-09 regarding revenue recognition. We noted no transactions entered into by the organization during the year for which there is a lack of authoritative guidance or consensus. There are no significant transactions that have been recognized in the financial statements in a different period than when the transaction occurred.

Accounting estimates are an integral part of the financial statements prepared by management and are based on management's knowledge and experience about past and current events and assumptions about future events. Certain accounting estimates are particularly sensitive because of their significance to the financial statements and because of the possibility that future events affecting them may differ significantly from those expected. The most sensitive estimate affecting the financial statement was management's determination that all accounts receivable are collectible at year end. We evaluated the key factors and assumptions used to develop the estimate of collectability in determining what is reasonable in relation to the financial statements taken as a whole.

611 N. Nevada Street
Carson City, Nevada 89703
Phone: (775) 882-7198
Fax: (775) 883-4346

Members of: CPA Connect
Nevada Society of Certified Public Accountants
American Institute of Certified Public Accountants
Affordable Housing Association of Certified Public Accountants

Difficulties Encountered in Performing the Audit

We encountered no significant difficulties in dealing with management in performing and completing our audit.

Corrected and Uncorrected Misstatements

Professional standards require us to accumulate all known and likely misstatements identified during the audit, other than those that are trivial, and communicate them to the appropriate level of management. Management has corrected all such misstatements. The following material misstatements detected as a result of audit procedures were corrected by management:

1. Record depreciation expense in the amount of $120,927.
2. Capitalize balcony repairs as part of building improvements in the amount of $68,562.

The total net income effect of all adjustments proposed and recorded by management was to decrease net income by $47,215.

Disagreements with Management

For purposes of this letter, professional standards define a disagreement with management as a financial accounting, reporting, or auditing matter, whether or not resolved to our satisfaction, that could be significant to the financial statements or the auditor's report. We are pleased to report that no such disagreements arose during the course of our audit.

Management Representations

We have requested certain representations from management that are included in the management representation letter dated July 16, 2020.

Management Consultations with Other Independent Accountants

In some cases, management may decide to consult with other accountants about auditing and accounting matters, similar to obtaining a "second opinion" on certain situations. If a consultation involves application of an accounting principle to the governmental unit's financial statements or a determination of the type of auditor's opinion that may be expressed on those statements, our professional standards require the consulting accountant to check with us to determine that the consultant has all the relevant facts. To our knowledge, there were no such consultations with other accountants.

Other Audit Findings or Issues

We generally discuss a variety of matters, including the application of accounting principles and auditing standards, with management each year prior to retention as the governmental unit's auditors. However, these discussions occurred in the normal course of our professional relationship and our responses were not a condition of our retention.

As required by generally accepted auditing standards and the terms of our engagement, in planning and performing our audit, we considered the internal control solely to determine the auditing procedures to be employed for the purpose of enabling us to express our opinion on the financial statements and not for the purpose of expressing an opinion on the effectiveness of the

District's internal control over financial reporting. Therefore, we express no opinion or other form of assurance thereon.

A deficiency in internal control exists when the design or operation of a control does not allow management or employees, in the normal course of performing their assigned functions, to prevent or detect and correct misstatements on a timely basis. A material weakness is a deficiency, or combination of deficiencies, in internal control such that there is a reasonable possibility that a material misstatement of the entity's financial statements will not be prevented, or detected and corrected on a timely basis. A significant deficiency is a deficiency, or combination of deficiencies in internal control that is less severe than a material weakness, yet important enough to merit attention by those charged with governance. Our report on Internal Control over Financial Reporting and on Compliance and Other Matters Based on an Audit of Financial Statements Performed in Accordance with *Government Auditing Standards* dated July 16, 2020, noted no significant deficiencies or material weaknesses.

This information is intended solely for the use of management and the Organization's Board of Directors and is not intended to be and should not be used by anyone other than these specified parties.

Carson City, Nevada
July 16, 2020

EXHIBIT 8D

AUDITED FINANCIAL STATEMENTS

For the fiscal year ending March 31, 2019.

NORTHERN NEVADA BUILDING & CONSTRUCTION
TRADE COUNCIL DEVELOPMENT CORPORATION
dba CARVILLE PARK APARTMENTS
HUD PROJECT NO. 125-35077-NP
FINANCIAL STATEMENTS
AND SUPPLEMENTARY INFORMATION
MARCH 31, 2019

NORTHERN NEVADA BUILDING & CONSTRUCTION
TRADE COUNCIL DEVELOPMENT CORPORATION
dba CARVILLE PARK APARTMENTS
HUD PROJECT NO. 125-35077-NP
FINANCIAL STATEMENTS
AND SUPPLEMENTARY INFORMATION
YEAR ENDED MARCH 31, 2019

TABLE OF CONTENTS

	Page No.
INDEPENDENT AUDITOR'S REPORT	1 - 2
FINANCIAL STATEMENTS	
Statement of Financial Position	3
Statement of Activities	4
Statement of Cash Flows	5 - 6
Notes to Financial Statements	7 - 12
REPORTS REQUIRED BY THE UNIFORM GUIDANCE	
Schedule of Expenditures of Federal Awards	14
INDEPENDENT AUDITOR'S REPORT ON INTERNAL CONTROL OVER FINANCIAL REPORTING AND ON COMPLIANCE AND OTHER MATTERS BASED ON AN AUDIT OF FINANCIAL STATEMENTS PERFORMED IN ACCORDANCE WITH *GOVERNMENT AUDITING STANDARDS*	15 - 16
INDEPENDENT AUDITOR'S REPORT ON COMPLIANCE FOR EACH MAJOR PROGRAM AND ON INTERNAL CONTROL OVER COMPLIANCE REQUIRED BY THE UNIFORM GUIDANCE	17 - 18
SCHEDULE OF FINDINGS AND QUESTIONED COSTS	19
CERTIFICATE OF PROJECT OWNER	20
CERTIFICATE OF MANAGING AGENT	21
COMMUNICATIONS WITH GOVERNANCE	23 - 25

Jonathan S. Steele, CPA CGMA

Steele
Certified Public Accountants

Vanessa L. Davis, CPA CGMA
Benjamin C. Steele, CPA CGMA Emeritus

INDEPENDENT AUDITOR'S REPORT

To the Board of Directors
Northern Nevada Building & Construction
Trade Council Development Corporation
dba Carville Park Apartment
HUD Project No. 125-35077-NP
Reno, Nevada

Report on the Financial Statements

We have audited the accompanying financial statements of Northern Nevada Building & Construction Trade Council Development Corporation (a nonprofit organization), dba Carville Park Apartments, HUD Project No. 125-35077-NP, which comprise the statement of financial position as of March 31, 2019, and the related statements of activities and cash flows for the year then ended, and the related notes to the financial statements.

Management's Responsibility for the Financial Statements

Management is responsible for the preparation and fair presentation of these financial statements in accordance with accounting principles generally accepted in the United States of America; this includes the design, implementation, and maintenance of internal control relevant to the preparation and fair presentation of financial statements that are free from material misstatement, whether due to fraud or error.

Auditor's Responsibility

Our responsibility is to express an opinion on these financial statements based on our audit. We conducted our audit in accordance with auditing standards generally accepted in the United States of America and the standards applicable to financial audits contained in *Government Auditing Standards*, issued by the Comptroller General of the United States. Those standards require that we plan and perform the audit to obtain reasonable assurance about whether the financial statements are free of material misstatement.

An audit involves performing procedures to obtain audit evidence about the amounts and disclosures in the financial statements. The procedures selected depend on the auditor's judgment, including the assessment of the risks of material misstatement of the financial statements whether due to fraud or error. In making those risk assessments, the auditor considers internal control relevant to the entity's preparation and fair presentation of the financial statements in order to design audit procedures that are appropriate in the circumstances, but not for the purpose of expressing an opinion on the effectiveness of the entity's internal control. Accordingly, we express no such opinion. An audit also includes evaluating the appropriateness of accounting policies used and the reasonableness of significant accounting estimates made by management, as well as evaluating the overall presentation of the financial statements.

611 N. Nevada Street
Carson City, Nevada 89703
Phone: (775) 882-7198
Fax: (775) 883-4346

Members of: CPA Connect
Nevada Society of Certified Public Accountants
American Institute of Certified Public Accountants
Affordable Housing Association of Certified Public Accountants

We believe that the audit evidence we have obtained is sufficient and appropriate to provide a basis for our audit opinion.

Opinion

In our opinion, the financial statements referred to above present fairly, in all material respects, the financial position of Northern Nevada Building & Construction Trad Council Development Corporation, dba Carville Park apartments, as of March 31, 2019, and the changes in its net assets and its cash flows for the year then ended in accordance with accounting principles generally accepted in the United States of America.

Other Matter

Other Information

Our audit was conducted for the purpose of forming an opinion on the financial statements as a whole. The accompanying schedule of expenditures of federal awards, as required by Title 2 U.S. *Code of Federal Regulations* Part 200, *Uniform Administrative Requirements, Cost Principles, and Audit Requirements for Federal Awards,* is presented for purposes of additional analysis and is not a required part of the financial statements. Such information is the responsibility of management and was derived from and relates directly to the underlying accounting and other records used to prepare the financial statements. The information has been subjected to the auditing procedures applied in the audit of the financial statements and certain additional procedures, including comparing and reconciling such information directly to the underlying accounting and other records used to prepare the financial statements or to the financial statements themselves, and other additional procedures in accordance with auditing standards generally accepted in the United States of America. In our opinion, the information is fairly stated in all material respects in relation to the financial statements as a whole.

Other Reporting Required by *Government Auditing Standards*

In accordance with *Government Auditing Standards*, we have also issued our report dated August 9, 2019, on our consideration of Northern Nevada Building & Construction Trade Council Development Corporation, dba Carville Park Apartments' internal control over financial reporting and on our tests of its compliance with certain provisions of laws, regulations, contracts, and grant agreements and other matters. The purpose of that report is to describe the scope of our testing of internal control over financial reporting and compliance and the results of that testing, and not to provide an opinion on internal control over financial reporting or on compliance. That report is an integral part of an audit performed in accordance with *Government Auditing Standards* in considering Northern Nevada Building & Construction Trade Council Development Corporation's internal control over financial reporting and compliance.

Stan : Associates, LLC

Carson City, Nevada
August 9, 2019

Northern Nevada Building & Construction
Trade Council Development Corporation
dba Carville Park Apartments
Statement of Financial Position
March 31, 2019

ASSETS	
CURRENT ASSETS	
Cash and Equivalents	$ 89,232
Accounts Receivable (Net of Allowance for Doubtful Accounts of $6,924)	9,779
Prepaid Expenses	43,640
Due from Related Party	63,730
TOTAL CURRENT ASSETS	206,381
PROPERTY AND EQUIPMENT	
Furniture and Equipment	805,695
Buildings and Improvements	2,449,624
Land and Improvements	1,292,464
	4,547,783
Less Accumulated Depreciation	(3,627,206)
TOTAL PROPERTY AND EQUIPMENT	920,577
OTHER ASSETS	
Tenant Deposits Held in Trust	53,415
Reserve for Replacements	10,679
TOTAL OTHER ASSETS	64,094
TOTAL ASSETS	$ 1,191,052
LIABILITIES AND NET ASSETS	
CURRENT LIABILITIES	
Accounts Payable	$ 18,465
Accrued Liabilities	1,006
Tenant Security Deposits	27,147
Prepaid Rents	14,763
TOTAL CURRENT LIABILITIES/TOTAL LIABILITIES	61,381
NET ASSETS	
Net Assets without Donor Restrictions	1,129,671
Net Assets with Donor Restrictions	-
TOTAL NET ASSETS	1,129,671
TOTAL LIABILITIES AND NET ASSETS	$ 1,191,052

See Accompanying Independent Auditor's Report & Notes to Financial Statements

Northern Nevada Building & Construction
Trade Council Development Corporation
dba Carville Park Apartments
Statement of Activities
For the Year Ended March 31, 2019

REVENUES	
Rental	$ 1,238,847
Interest Income	419
Tenant Charges	12,817
Laundry, Vending, and Miscellaneous	9,024
TOTAL REVENUE	1,261,107
EXPENSES	
Program Services	
Administrative	254,868
Utilities	172,491
Operating and Maintenance	416,385
Taxes and Insurance	139,448
Insurance and Employee Benefits	100,212
Depreciation	117,127
	1,200,531
Supporting Activities	
Office Salaries	36,993
Office Expenses	17,783
	54,776
TOTAL EXPENSES	1,255,307
CHANGE IN NET ASSETS WITHOUT DONOR RESTRICTIONS	5,800
NET ASSETS WITHOUT DONOR RESTRICTIONS, MARCH 31, 2018	1,123,871
NET ASSETS WITHOUT DONOR RESTRICTIONS, MARCH 31, 2019	$ 1,129,671

See Accompanying Independent Auditor's Report & Notes to Financial Statements

Northern Nevada Building & Construction
Trade Council Development Corporation
dba Carville Park Apartments
Statement of Cash Flows
For the Year Ended March 31, 2019

CASH FLOWS FROM OPERATING ACTIVITIES		
Rental Receipts	$	1,229,883
Interest Receipts		419
Other Receipts		20,223
Administrative Expenses Paid		(67,405)
Management Fees Paid		(127,088)
Utilities Expenses Paid		(172,491)
Salaries and Wages Paid		(273,901)
Operating and Maintenance Expenses Paid		(276,155)
Real Estate Taxes Paid		(61,192)
Property Insurance Paid		(55,687)
Miscellaneous Taxes and Insurance Paid		(128,802)
NET CASH USED BY OPERATING ACTIVITIES		87,804
CASH FLOWS FROM INVESTING ACTIVITIES		
Acquisition of Property and Equipment		(2,495)
Disbursements from Reserve for Replacements Account		17,000
Deposits and Interest Retained in Reserve for Replacements Account		(14,600)
NET CASH PROVIDED BY INVESTING ACTIVITIES		(95)
NET INCREASE (DECREASE) IN CASH AND CASH EQUIVALENTS		87,709
CASH AND CASH EQUIVALENTS, MARCH 31, 2018		1,523
CASH AND CASH EQUIVALENTS, MARCH 31, 2019	$	89,232

See Accompanying Independent Auditor's Report & Notes to Financial Statements

Northern Nevada Building & Construction
Trade Council Development Corporation
dba Carville Park Apartments
Statement of Cash Flows
For the Year Ended March 31, 2019

RECONCILIATION OF CHANGE IN NET ASSETS TO NET CASH USED BY OPERATING ACTIVITIES		
Decrease in Net Assets	$	5,800
Adjustments to Reconcile Increase (Decrease) in Net Assets to Net Cash Used By Operating Activities		
Depreciation Expense		117,127
(Increase) decrease in:		
Cash Restricted for Tenant Deposits Held in Trust		(4,547)
Accounts Receivable		2,614
Prepaid Expenses		(6,741)
(Decrease) increase in:		
Accounts Payable		(5,391)
Accrued Liabilities		(12,901)
Prepaid Rents		(11,578)
Tenant Security Deposits		3,421
NET CASH USED BY OPERATING ACTIVITIES	$	87,804

See Accompanying Accountant's Audit Report & Notes to Financial Statements

Northern Nevada Building & Construction
Trade Council Development Corporation
dba Carville Park Apartments
Notes to Financial Statements
March 31, 2019

NOTE 1 – SUMMARY OF SIGNIFICANT ACCOUNTING POLICIES

1. Business Activity

   The Corporation was formed as a non-profit corporation under the laws of the State of Nevada on April 6, 1979. It was organized to construct, own, and operate a 208-unit rental apartment project in Reno, Nevada, knows as Carville Park Apartments.

   The Project is regulated by the U.S. Department of Housing and Urban Development (HUD) as to rent charges and operating methods. Lower rental charges to tenants are recovered by the Project through rent subsidies provided by HUD. The Section 8 program is a major HUD program.

2. Accounting Methods and Revenue Recognition

   The accompanying financial statements have been prepared on the accrual basis of accounting and in accordance with accounting principles generally accepted in the United States of America (GAAP), whereby income is recognized when earned and costs and expenses are recognized when the obligations are incurred. Accordingly, all significant receivables, payables, and other liabilities are reflected.

   The tenant leases are for one year and are accounted for as operating leases with rental income reported as earned over the term of the lease. Under the Housing Assistance contract, the Organization may not increase rents charged to tenants without prior HUD approval.

3. Classification of Net Assets

   Net assets of the Project are classified based on the presence or absence of donor-imposed restrictions. Net assets are comprised of two groups as follows:

   Net Assets without Donor Restrictions – Amounts that are not subject to usage restrictions based on donor-imposed requirements. This class also includes assets previously restricted where restrictions have been men.

   Net assets with Donor Restrictions – Assets subject to usage limitations based on donor-imposed or grantor restrictions. These restrictions may be temporary or may be based on a particular use. Restrictions may be met by the passage of time or by actions of the Project. Certain restrictions may need to be maintained in perpetuity.

   Earnings related to restricted net assets will be included in net assets without donor-restrictions unless otherwise specifically required to be included in donor-restricted net assets by the donor or by applicable state law.

NOTE 1 - SUMMARY OF SIGNIFICANT ACCOUNTING POLICIES (CONTINUED)

3. Classification of Net Assets (Continued)

   The Project does not interpret the guidance in the standard to include amounts restricted by HUD as donor-restricted. The project believes that these amounts do not meet the spirit of the standard for such a classification or is there any industry standard indicating that others will treat these assets as donor-restricted.

   All net assets of the Project at March 31, 2019 were considered to be net assets without donor restrictions.

4. Functional Allocation of Expenses

   Expenditures incurred in connection with project operations and expenditures made for corporate (mortgagor entity) purposes have been summarized on a functional basis in the Statement of Activities.

5. Property and Equipment

   Property and equipment are carried at cost or, if donated, at the approximate fair value at the date of donation. Fixed asset acquisitions in excess of $500 are capitalized and depreciation is provided using the straight-line method over the estimated useful lives of the buildings and related land improvements (15 – 40 years) and furnishings and equipment (5 – 7 years). Depreciation expense for the year ended March 31, 2019, was $117,127.

6. Cash and Cash Equivalents

   For purposes of the Statement of Cash Flows, the Project considers all unrestricted highly liquid investments purchased with original maturities of three months or less to be cash equivalents. At March 31, 2019, there were no cash equivalents.

7. Estimates

   The preparation of financial statements in conformity with generally accepted accounting principles requires management to make estimates and assumptions that affect the reported amounts of assets and liabilities and disclosure of contingent assets and liabilities at the date of the financial statements and the reported amounts of revenue and expenses during the reporting period. Actual results could differ from those estimates.

NOTE 1 – SUMMARY OF SIGNIFICANT ACCOUNTING POLICIES (CONTINUED)

8. Investments

Investments in marketable securities with readily determinable fair values and all investments in debt securities are reported at their fair values in the statements of financial position. Unrealized gains and losses are included in the statement of activities.

9. Concentrations of Credit Risk

Financial instruments that potentially subject the Project to concentrations of credit risk consist principally of cash in banks, investment accounts, and tenant accounts receivable.

The Project has funds in credit union accounts which are insured by the National Credit Union Association (NCUA) up to $250,000. On March 31, 2019, the Project's credit union account balances were within the NCUA limits.

The Project maintains its reserve funds in investment institutions. The investments that the Project holds consist of money market funds. The funds are insured by the Securities Investor Protection Corporation for the amount invested in the event of fraud, theft, or other such deceptive activity.

Concentrations of credit risk with respect to tenant accounts receivable are limited because all tenants are required to pay their rent monthly on the first of the month. However, since all of the Project's tenants live and work in the Northern Nevada area, the Project's ability to collect tenant accounts receivable may be affected by economic fluctuations in that geographic area.

The Project's primary asset is a 208-unit apartment project. The Project's operations are concentrated in the multifamily real estate market. In addition, the Project operates in a heavily regulated environment. The operations of the Project are subject to the administrative directives, rules and regulations of federal, state and local regulatory agencies, including, but not limited to, HUD. Such administrative directives, rules and regulations are subject to change by an act of congress or an administrative change mandated by HUD. Such changes may occur with little notice or inadequate funding to pay for the related cost, including the additional administrative burden, to comply with a change.

9. Bad Debts

Uncollectible accounts receivable are charged directly against operations when they are determined to be uncollectible. Use of this method does not result in a material difference from the valuation method required by generally accepted accounting principles.

NOTE 1 - SUMMARY OF SIGNIFICANT ACCOUNTING POLICIES (CONTINUED)

10. Impairment of Long-Loved Assets

The Organization reviews long-lived assets, including property and equipment and intangible assets, for impairment whenever events or changes in business circumstances indicate that the carrying amount of an asset may not be fully recoverable. An impairment loss would be recognized when the estimated future cash flows from the use of the asset are less than the carrying amount of that asset. To date, there have been no such losses.

11. Advertising and Marketing

Advertising and marketing costs are expensed as incurred. Advertising expense totaled $1,165 for the year ended March 31, 2019.

12. Income Taxes

The Project is a nonprofit corporation that is exempt from federal income taxes under Section 501(c)(3) of the Internal Revenue Code. Accordingly, no liability for federal income taxes has been provided in the financial statements. It is the Project's tax position that it has not engaged in activities that would jeopardize its exempt status nor has it engaged in activities that would result in unrelated business income tax. The Project's Forms 990, *Return of Organization Exempt from Income Tax*, for the tax years ending 2016, 2017 and 2018 are subject to examination by the IRS, generally for three years after they were filed.

13. Subsequent Events

In preparing these financial statements, the Project has evaluated events and transactions for potential recognition or disclosure through August 9, 2019, the date the financial statements were available to be issued. Subsequent events after that date have not been evaluated.

NOTE 2 – ALLOWABLE DISTRIBUTIONS

In accordance with HUD Handbook 4370.2 REV-1, CHG-1, *Financial Operations and Accounting Procedures for Insured Multifamily Projects,* page 2 – 12, distributions to owners are not permitted on non-profit projects. For the year ended March 31, 2019, there were no distributions made.

NOTE 3 – ADOPTION OF ACCOUNTING PRONOUNCEMENT

In August 2016, the Financial Accounting Standards Board (FASB) issued Accounting Standards Update (ASU) No. 2016-14, *Not-for-Profit Entities (Topic 958): Presentation of Financial Statements of Not-for-Profit Entities.* ASU 2016-14 requires significant changes to the financial reporting model of organizations who follow the not-for-profit reporting model. The changes include reducing the classes of net assets from three classes to two – net assets with donor restrictions and net assets without donor restrictions. The ASU will also require changes in the way certain information is aggregated and reported by the Project, including required disclosures about liquidity and availability of resources and increased disclosures on functional expenses. The new standard is effective for the Project's year ending March 31, 2019 and thereafter and must be applied on a retrospective basis. The Project adopted the ASU effective April 1, 2018. Adoption of the ASU did not result in any reclassifications or restatements to net assets or changes in net assets.

NOTE 4 – RELATED PARTY TRANSACTIONS

Transactions involving related parties cannot be presumed to be carried out on an arm's-length basis. Except for routine transactions, it is generally not possible to determine whether a particular transaction would have taken place if the parties had not been related or, assuming it would have taken place, what the terms and manner of settlement would have been.

Effective November 1, 1987, management of the Project was provided by the Building and Construction Trades Council of Northern Nevada, a non-profit corporation which elects the Board of Directors of the Northern Nevada Building & Construction Trade Council Development Corporation, dba Carville Park Apartments. The management fee is $47 per unit per month for a total paid of $117,312 during the year ended March 31, 2019.

During the 2008 and 2009 fiscal years, the owners placed the property up for sale. During those two years, $72,630 was paid by the Project for various costs associated with the sale. These expenditures are an entity expense not a project expense and, as such, constitute an unauthorized distribution to the Project Owner. Therefore, the Owner is required to reimburse the Project for these expenditures. The amount is recorded as due from related party in the statement of financial position. During the year ended March 31, 2019, no payments were made on this receivable, leaving a balance due of $63,730.

NOTE 5 – PENSION CONTRIBUTIONS

In connection with its collective bargaining agreement with the Communication Workers of America, AFL-CIO, the company participates with other companies in the communication industry in a defined benefit pension plan. The plan covers all of the company's employees who are members of the Communication Workers of America Union. The pension contribution expense for the year ended March 31, 2019, was $36,945.

NOTE 6 – HOUSING ASSISTANCE PAYMENTS

Pursuant to Section 8 of Title II of the United States Housing Act of 1973, as amended, rents are subsidized by governmental payments through a housing assistance contract between the United States Department of Housing and Urban Development (HUD) and the Organization. The Partnership receives subsidies for 208 apartments which are rented to qualified low and very low income families in an amount which equals the difference between the Contract Rent, as determined by HUD, and 30% of the tenant's family income. The contract expires October 31, 2023.

In addition, the HAP contract provides that the Corporation is entitled to Section 8 Subsidies in the amount of 80% of the Contract Rents for vacant apartments for a period not to exceed thirty days. Housing assistance payments received totaled $840,301 for the year ended March 31, 2019.

NOTE 7 – LEASE TRANSACTIONS

The Organization entered into a five year lease agreement, commencing October 1, 2018, for the use of a copy systems for $57 per month. The lease also provides for sales tax and per copy charges which vary according to usage in addition to the monthly fee. The lease expense amounted to $832 for the year ended March 31, 2019.

Future obligations over the terms of the operating lease are as follows:

Year Ending March 31,	
2020	$ 832
2021 and Thereafter	517
	$ 1,349

Northern Nevada Building & Construction
Trade Council Development Corporation
dba Carville Park apartments
March 31, 2019

REPORTS REQUIRED BY THE UNIFORM GUIDANCE

Northern Nevada Building & Construction
Trade Council Development Corporation
dba Carville Park Apartments
Schedule of Expenditures of Federal Awards
For the Year ended March 31, 2019

FEDERAL GRANTOR/PASS-THROUGH GRANTOR/PROGRAM TITLE	FEDERAL CFDA NUMBER	FEDERAL EXPENDITURES
U.S. Department of Housing and Urban Development		
Section 8 Housing Assistance Payments	14.182	$ 854,020
Total Expenditures of Federal Awards		$ 854,020

Note 1 – Basis of Presentation

The accompanying schedule of expenditures of federal awards (the Schedule) includes the federal award activity of Northern Nevada building & Construction Trade Council Development Corporation, dba Carville Park Apartments, HUD Project No. 125-35077-NP, under programs of the federal government for the year ended March 31, 2019. The information in this Schedule is presented in accordance with the requirements of Title 2 U.S. *Code of Federal Regulations* Part 200, *Uniform Administrative Requirements, Cost Principles, and Audit Requirements for Federal Awards* (Uniform Guidance). Because the Schedule presents only a selected portion of the operations of Northern Nevada Building & Construction Trade Council Development Corporation, it is not intended to and does not present the financial position, changes in net assets, or cash flows of Northern Nevada Building & construction Trade Council Development Corporation.

Note 2 – Summary of Significant Accounting Policies

A. Expenditures reported on the schedule are reported on the accrual basis of accounting. Such expenditures are recognized following the cost principles contained in the Uniform Guidance, wherein certain types of expenditures are not allowable or are limited as to reimbursement.

B. The Project did not receive Federal Financial Assistance in the form of loans or loan guarantees, or in the form of endowment funds.

C. The schedule does not include matching expenditures.

D. Pass-through entity identifying numbers are presented where available.

Jonathan S. Steele, CPA CGMA

Steele
Certified Public Accountants

Vanessa L. Davis, CPA CGMA
Benjamin C. Steele, CPA CGMA Emeritus

INDEPENDENT AUDITOR'S REPORT ON INTERNAL CONTROL OVER FINANCIAL REPORTING AND ON COMPLIANCE AND OTHER MATTERS BASED ON AN AUDIT OF FINANCIAL STATEMENTS PERFORMED IN ACCORDANCE WITH *GOVERNMENT AUDITING STANDARDS*

To the Board of Directors of
Northern Nevada building & Construction
Trade Council Development Corporation
dba Carville Park Apartment
HUD Project No. 125-35077-NP
Reno, Nevada

We have audited, in accordance with the auditing standards generally accepted in the United States of America and the standards applicable to Financial audits contained in *Government Auditing Standards* issued by the Comptroller General of the United States, the financial statements of Northern Nevada Building & Construction Trade Council Development Corporation (a nonprofit organization), dba Carville Park Apartment, HUD Project No. 125-35077-NP, which comprise the statement of financial position as of March 31, 2019, and the related statements of activities and cash flows for the year then ended, and the related notes to the financial statements, and have issued our report thereon dated August 9, 2019.

Internal Control over Financial Reporting

In planning and performing our audit of the financial statements, we considered Northern Nevada Building & Construction Trade Council Development Corporation's internal control over financial reporting (internal control) to determine the audit procedures that are appropriate in the circumstances for the purpose of expressing our opinion on the financial statements, but not for the purpose of expressing an opinion on the effectiveness of Northern Nevada Building & Construction Trade Council Development Corporation's internal control. Accordingly, we do not express an opinion on the effectiveness of Northern Nevada Building & Construction Trade Council Development Corporation's internal control.

A *deficiency in internal control* exists when the design or operation of a control does not allow management or employees, in the normal course of performing their assigned functions, to prevent, or detect and correct, misstatements on a timely basis. A *material weakness* is a deficiency, or a combination of deficiencies, in internal control, such that there is a reasonable possibility that a material misstatement of the entity's financial statements will not be prevented or detected and corrected on a timely basis. A *significant deficiency* is a deficiency, or a combination of deficiencies, in internal control that is less severe than a material weakness, yet important enough to merit attention by those charged with governance.

611 N. Nevada Street
Carson City, Nevada 89703
Phone: (775) 882-7198
Fax: (775) 883-4346

Members of: CPA Connect
Nevada Society of Certified Public Accountants
American Institute of Certified Public Accountants
Affordable Housing Association of Certified Public Accountants

Our consideration of internal control was for the limited purpose described in the first paragraph of this section and was not designed to identify all deficiencies in internal control that might be material weaknesses or significant deficiencies in internal control that we consider to be material weaknesses. However, material weaknesses may exist that have not been identifies.

Compliance and Other Matters

As part of obtaining reasonable assurance about whether Northern Nevada Building & Construction Trade Council Development Corporation's financial statements are free from material misstatement, we performed tests of its compliance with certain provisions of laws, regulations, contracts, and grant agreements, noncompliance with which could have a direct and material effect on the determination of financial statement amounts. However, providing an opinion on compliance with those provisions was not an objective of our audit, and accordingly, we do not express such an opinion. The results of our tests disclosed no instances of noncompliance or other matters that are required to be reported under *Government Auditing Standards.*

Purpose of this Report

The purpose of this report is solely to describe the scope of our testing of internal control and compliance and the results of that testing, and not to provide an opinion on the effectiveness of the organization's internal control or on compliance. This report is an integral part of an audit performed in accordance with *Government Auditing Standards* in considering the organization's internal control and compliance, Accordingly, this communication is not suitable for any other purpose.

Stule : Associates, LLC

Carson City, Nevada
August 9, 2019

Jonathan S. Steele, CPA CGMA

Steele
Certified Public Accountants

Vanessa L. Davis, CPA CGMA
Benjamin C. Steele, CPA CGMA Emeritus

INDEPENDENT AUDITOR'S REPORT ON COMPLIANCE FOR EACH MAJOR PROGRAM AND ON INTERNAL CONTROL OVER COMPLIANCE REQUIRED BY THE UNIFORM GUIDANCE

To the Board of Directors of
Northern Nevada Building & Construction
Trade Council Development Corporation
dba Carville Park Apartments
HUD Project No. 125-35077-NP
Reno, Nevada

Report on Compliance for Each Major Federal Program

We have audited Northern Nevada Building & Construction Trade Council Development Corporation, dba Carville Park Apartments' compliance with the types of compliance requirements described in the *OMB Compliance Supplement* that could have a direct and material effect on each of Northern Nevada Building & Construction Trade Council Development Corporation's major federal programs for the year ended March 31, 2019. Northern Nevada Building & Construction Trade Council Development Corporation's major federal programs are identified in the summary of auditor's results section of the accompanying schedule of findings and questioned costs.

Management's Responsibility

Management is responsible for compliance with the requirements of laws, regulations, contracts, and grants applicable to its federal programs.

Auditor's Responsibility

Our responsibility is to express an opinion on compliance for each of Northern Nevada Building & Construction Trade Council Development Corporation's major federal programs based on our audit of the types of compliance requirements referred to above. We conducted our audit of compliance in accordance with auditing standards generally accepted in the United States of America; the standards applicable to financial audits contained in *Governmental Auditing* Standards, issued by the Comptroller General of the United States; and the audit requirements of Title 2 U.S. *Code of Federal Regulations* Part 200, *Uniform Administrative Requirements, Cost Principles, and Audit Requirements for Federal Awards* (Uniform Guidance). Those standards and the Uniform Guidance require that we plan and perform the audit to obtain reasonable assurance about whether noncompliance with the types of compliance requirements referred to above that could have a direct and material effect on a major federal program occurred. An audit includes examining, on a test basis, evidence about Northern Nevada Building & Construction Trade Council Development Corporation's compliance with those requirements and performing such other procedures as we considered necessary in the circumstances.

611 N. Nevada Street
Carson City, Nevada 89703
Phone: (775) 882-7198
Fax: (775) 883-4346

Members of: CPA Connect
Nevada Society of Certified Public Accountants
American Institute of Certified Public Accountants
Affordable Housing Association of Certified Public Accountants

We believe that our audit provides a reasonable basis for our opinion on compliance for each major federal program. However, our audit does not provide a legal determination of Northern Nevada Building & Construction Trade Council Development Corporation's compliance.

Opinion on Each Major Federal Program

In our opinion, Northern Nevada Building & Construction Trade Council Development Corporation complied, in all material respects, with the types of compliance requirements referred to above that could have a direct and material effect on each of its major federal programs for the year ended March 31, 2019.

Report on Internal Control over Compliance

Management of Northern Nevada Building & Construction Trade Council Development Corporation is responsible for establishing and maintaining effective internal control over compliance with the types of compliance requirements referred to above. In planning and performing our audit of compliance, we considered Northern Nevada Building & Construction Trade Council Development Corporation's internal control over compliance with the types of requirements that could have a direct and material effect on each major federal program to determine the auditing procedures that are appropriate in the circumstances for the purpose of expressing an opinion on compliance for each major federal program and to test and report on internal control over compliance in accordance with the Uniform Guidance, but not for the purpose of expressing an opinion on the effectiveness of internal control over compliance. Accordingly, we do not express an opinion on the effectiveness of Northern Nevada Building & Construction Trade Council Development Corporation's internal control over compliance.

A *deficiency in internal control over compliance* exists when the design or operation of a control over compliance does not allow management or employees, in the normal course of performing their assigned functions, to prevent, or detect and correct, noncompliance with a type of compliance requirement of a federal program on a timely basis. A *material weakness in internal control over compliance* is a deficiency, or combination of deficiencies, in internal control over compliance, such that there is a reasonable possibility that material noncompliance with a type of compliance requirement of a federal program will not be prevented, or detected and corrected, on a timely basis. A *significant deficiency in internal control over compliance* is a deficiency, or a combination of deficiencies, in internal control over compliance with a type of compliance requirement of a federal program that is less severe than a material weakness in internal control over compliance, yet important enough to merit attention by those charged with governance.

Our consideration of internal control over compliance was for the limited purpose described in the first paragraph of this section and was not designed to identify all deficiencies in internal control over compliance that might be material weaknesses or significant deficiencies. We did not identify any deficiencies in internal control over compliance that we consider to be material weaknesses. However, material weaknesses may exist that have not been identified.

The purpose of this report on internal control over compliance is solely to describe the scope of our testing of internal control over compliance and the results of that testing based on the requirements of the Uniform Guidance. Accordingly, this report is not suitable for any other purpose.

Stule Associates, LLC

Carson City, Nevada
July 18, 2019

Northern Nevada Building & Construction
Trade Council Development Corporation
dba Carville Park Apartments
Schedule of Findings and Questioned Costs
For the Year Ended March 31, 2019

A. Summary of Audit Results

1. The auditor's report expresses an unmodified opinion on whether the financial statements of Northern Nevada Building & Construction Trade Council Development Corporation were prepared in accordance with GAAP.

2. No deficiencies material to the financial statements of Northern Nevada Building & Construction Trade Council Development Corporation were disclosed during the audit. No material weaknesses are reported.

3. No instances of noncompliance material to the financial statement of Northern Nevada Building & Construction Trade Council Development corporation were disclosed during the audit.

4. No deficiencies in internal control over major federal award programs were noted during the audit. No material weaknesses are reported

5. The auditor's report on compliance for the major federal award programs for Northern Nevada Building & Construction Trade Council Development Corporation expresses an unmodified opinion on all major federal programs.

6. Audit findings that are required to be reported in accordance with 2 CFR section 200.516(a) are reported in this Schedule.

7. The program tested as a major program was Section 8 Housing Assistance Payments CFDA#14.182.

8. The threshold for distinguishing Types A and B programs was $750,000.

9. Northern Nevada Building & Construction Trade Council Development corporation was determined to be a low-risk auditee.

Northern Nevada Building & Construction
Trade Council Development Corporation
dba Carville Park Apartments
HUD PROJECT NO. 125-35077-NP

CERTIFICATE OF PROJECT OWNER

We hereby certify that we have examined the accompanying financial statements and supplemental data of Northern Nevada Building & Construction Trade Council Development Corporation, and to the best of our knowledge and belief, the same are accurate and complete.

Date	Russ James, President
Date	Paul D. McKenzie, Secretary/Treasurer

Northern Nevada Building & Construction
Trade Council Development Corporation
dba Carville Park Apartments
HUD PROJECT NO. 125-35077-NP

CERTIFICATE OF MANAGING AGENT

We hereby certify that we have examined the accompanying financial statements and supplemental data of Northern Nevada Building & Construction Trade Council Development Corporation and to the best of our knowledge and belief, the same are accurate and complete.

Date

Russ James, President

Building & Construction Trade Council
of Northern Nevada

Management Agent Employer Identification Number 88-0025643

COMMUNICATIONS WITH GOVERNANCE

Jonathan S. Steele, CPA CGMA

Steele
Certified Public Accountants

Vanessa L. Davis, CPA CGMA
Benjamin C. Steele, CPA CGMA Emeritus

To the Board of Directors
Northern Nevada Building & Construction
Trade Council Development Corporation

We have audited the basic financial statements of the Northern Nevada Building & Construction Trad Council Development Corporation for the year ended March 31, 2019, and have issued our report thereon dated August 9, 2019. Professional standards require that we provide you with the following information related to our audit.

Our Responsibility under U.S. Generally Accepted Auditing Standards

As stated in our engagement letter dated September 28, 2018, our responsibility as described by professional standards, is to express opinions about whether the financial statements prepared by management with your oversight are fairly presented, in all material respects in conformity with U.S. generally accepted accounting principles. Our audit of the financial statements does not relieve you or management or your responsibilities.

Significant Audit Findings

Qualitative Aspects of Accounting Practices

Management is responsible for the selection and use of appropriate accounting policies. The significant accounting policies used by the Northern Nevada Building & Construction Trade Council Development Corporation are described in the financial statements. No new accounting policies were adopted and the application of existing policies was not changed during the 2018/2019 fiscal year. We noted no transactions entered into by the organization during the year for which there is a lack of authoritative guidance or consensus. There are no significant transactions that have been recognized in the financial statements in a different period than when the transaction occurred.

Accounting estimates are an integral part of the financial statements prepared by management and are based on management's knowledge and experience about past and current events and assumptions about future events. Certain accounting estimates are particularly sensitive because of their significance to the financial statements and because of the possibility that future events affecting them may differ significantly from those expected. The most sensitive estimate affecting the financial statement was management's determination that all accounts receivable are collectible at year end. We evaluated the key factors and assumptions used to develop the estimate of collectability in determining what is reasonable in relation to the financial statements taken as a whole.

611 N. Nevada Street
Carson City, Nevada 89703
Phone: (775) 882-7198
Fax: (775) 883-4346

Members of: CPA Connect
Nevada Society of Certified Public Accountants
American Institute of Certified Public Accountants
Affordable Housing Association of Certified Public Accountants

Difficulties Encountered in Performing the Audit

We encountered no significant difficulties in dealing with management in performing and completing our audit.

Corrected and Uncorrected Misstatements

Professional standards require us to accumulate all known and likely misstatements identified during the audit, other than those that are trivial, and communicate them to the appropriate level of management. Management has corrected all such misstatements. No material misstatements were detected as a result of audit procedures.

Disagreements with Management

For purposes of this letter, professional standards define a disagreement with management as a financial accounting, reporting, or auditing matter, whether or not resolved to our satisfaction, that could be significant to the financial statements or the auditor's report. We are pleased to report that no such disagreements arose during the course of our audit.

Management Representations

We have requested certain representations from management that are included in the management representation letter dated August 15, 2018.

Management Consultations with Other Independent Accountants

In some cases, management may decide to consult with other accountants about auditing and accounting matters, similar to obtaining a "second opinion" on certain situations. If a consultation involves application of an accounting principle to the governmental unit's financial statements or a determination of the type of auditor's opinion that may be expressed on those statements, our professional standards require the consulting accountant to check with us to determine that the consultant has all the relevant facts. To our knowledge, there were no such consultations with other accountants.

Other Audit Findings or Issues

We generally discuss a variety of matters, including the application of accounting principles and auditing standards, with management each year prior to retention as the governmental unit's auditors. However, these discussions occurred in the normal course of our professional relationship and our responses were not a condition of our retention.

As required by generally accepted auditing standards and the terms of our engagement, in planning and performing our audit, we considered the internal control solely to determine the auditing procedures to be employed for the purpose of enabling us to express our opinion on the financial statements and not for the purpose of expressing an opinion on the effectiveness of the District's internal control over financial reporting. Therefore, we express no opinion or other form of assurance thereon.

A deficiency in internal control exists when the design or operation of a control does not allow management or employees, in the normal course of performing their assigned functions, to prevent or detect and correct misstatements on a timely basis. A material weakness is a deficiency, or combination of deficiencies, in internal control such that there is a reasonable possibility that a material misstatement of the entity's financial statements will not be prevented, or detected and corrected on a timely basis. A significant deficiency is a deficiency, or combination of deficiencies in internal control that is less severe than a material weakness, yet important enough to merit attention by those charged with governance. Our report on Internal Control over Financial Reporting and on Compliance and Other Matters Based on an Audit of Financial Statements Performed in Accordance with *Government Auditing Standards* dated August 9, 2019, noted no significant deficiencies or material weaknesses.

This information is intended solely for the use of management and the Organization's Board of Directors and is not intended to be and should not be used by anyone other than these specified parties.

Stulz Associates, LLC

Carson City, Nevada
August 9, 2019

EXHIBIT 8E

AUDITED FINANCIAL STATEMENTS

For the fiscal year ending March 31, 2018.

NORTHERN NEVADA BUILDING & CONSTRUCTION TRADE COUNCIL DEVELOPMENT CORPORATION
dba CARVILLE PARK APARTMENTS
HUD PROJECT NO. 125-35077-NP
FINANCIAL STATEMENTS
AND SUPPLEMENTARY INFORMATION
MARCH 31, 2018

NORTHERN NEVADA BUILDING & CONSTRUCTION
TRADE COUNCIL DEVELOPMENT CORPORATION
dba CARVILLE PARK APARTMENTS
HUD PROJECT NO. 125-35077-NP
FINANCIAL STATEMENTS
AND SUPPLEMENTARY INFORMATION
YEAR ENDED MARCH 31, 2018

TABLE OF CONTENTS

	Page No.
INDEPENDENT AUDITOR'S REPORT	1 - 2
FINANCIAL STATEMENTS	
Statement of Financial Position	3
Statement of Activities	4
Statement of Cash Flows	5 - 6
Notes to Financial Statements	7 - 11
REPORTS REQUIRED BY THE UNIFORM GUIDANCE	
Schedule of Expenditures of Federal Awards	13
INDEPENDENT AUDITOR'S REPORT ON INTERNAL CONTROL OVER FINANCIAL REPORTING AND ON COMPLIANCE AND OTHER MATTERS BASED ON AN AUDIT OF FINANCIAL STATEMENTS PERFORMED IN ACCORDANCE WITH *GOVERNMENT AUDITING STANDARDS*	14 - 15
INDEPENDENT AUDITOR'S REPORT ON COMPLIANCE FOR EACH MAJOR PROGRAM AND ON INTERNAL CONTROL OVER COMPLIANCE REQUIRED BY THE UNIFORM GUIDANCE	16 - 17
SCHEDULE OF FINDINGS AND QUESTIONED COSTS	18
CERTIFICATE OF PROJECT OWNER	19
CERTIFICATE OF MANAGING AGENT	20
COMMUNICATIONS WITH GOVERNANCE	22 - 24

Jonathan S. Steele, CPA CGMA

Steele
Certified Public Accountants

Vanessa L. Davis, CPA CGMA
Benjamin C. Steele, CPA CGMA Emeritus

INDEPENDENT AUDITOR'S REPORT

To the Board of Directors
Northern Nevada Building & Construction
Trade Council Development Corporation
dba Carville Park Apartment
HUD Project No. 125-35077-NP
Reno, Nevada

Report on the Financial Statements

We have audited the accompanying financial statements of Northern Nevada Building & Construction Trade Council Development Corporation (a nonprofit organization), dba Carville Park Apartments, HUD Project No. 125-35077-NP, which comprise the statement of financial position as of March 31, 2018, and the related statements of activities and cash flows for the year then ended, and the related notes to the financial statements.

Management's Responsibility for the Financial Statements

Management is responsible for the preparation and fair presentation of these financial statements in accordance with accounting principles generally accepted in the United States of America; this includes the design, implementation, and maintenance of internal control relevant to the preparation and fair presentation of financial statements that are free from material misstatement, whether due to fraud or error.

Auditor's Responsibility

Our responsibility is to express an opinion on these financial statements based on our audit. We conducted our audit in accordance with auditing standards generally accepted in the United States of America and the standards applicable to financial audits contained in *Government Auditing Standards*, issued by the Comptroller General of the United States. Those standards require that we plan and perform the audit to obtain reasonable assurance about whether the financial statements are free of material misstatement.

An audit involves performing procedures to obtain audit evidence about the amounts and disclosures in the financial statements. The procedures selected depend on the auditor's judgment, including the assessment of the risks of material misstatement of the financial statements whether due to fraud or error. In making those risk assessments, the auditor considers internal control relevant to the entity's preparation and fair presentation of the financial statements in order to design audit procedures that are appropriate in the circumstances, but not for the purpose of expressing an opinion on the effectiveness of the entity's internal control. Accordingly, we express no such opinion. An audit also includes evaluating the appropriateness of accounting policies used and the reasonableness of significant accounting estimates made by management, as well as evaluating the overall presentation of the financial statements.

611 N. Nevada Street
Carson City, Nevada 89703
Phone: (775) 882-7198
Fax: (775) 883-4346

Members of: CPA Connect
Nevada Society of Certified Public Accountants
American Institute of Certified Public Accountants
Affordable Housing Association of Certified Public Accountants

We believe that the audit evidence we have obtained is sufficient and appropriate to provide a basis for our audit opinion.

Opinion

In our opinion, the financial statements referred to above present fairly, in all material respects, the financial position of Northern Nevada Building & Construction Trad Council Development Corporation, dba Carville Park apartments, as of March 31, 2018, and the changes in its net assets and its cash flows for the year then ended in accordance with accounting principles generally accepted in the United States of America.

Other Matter

Other Information

Our audit was conducted for the purpose of forming an opinion on the financial statements as a whole. The accompanying schedule of expenditures of federal awards, as required by Title 2 U.S. *Code of Federal Regulations* Part 200, *Uniform Administrative Requirements, Cost Principles, and Audit Requirements for Federal Awards,* is presented for purposes of additional analysis and is not a required part of the financial statements. Such information is the responsibility of management and was derived from and relates directly to the underlying accounting and other records used to prepare the financial statements. The information has been subjected to the auditing procedures applied in the audit of the financial statements and certain additional procedures, including comparing and reconciling such information directly to the underlying accounting and other records used to prepare the financial statements or to the financial statements themselves, and other additional procedures in accordance with auditing standards generally accepted in the United States of America. In our opinion, the information is fairly stated in all material respects in relation to the financial statements as a whole.

Other Reporting Required by *Government Auditing Standards*

In accordance with *Government Auditing Standards*, we have also issued our report dated August 22, 2018, on our consideration of Northern Nevada Building & Construction Trade Council Development Corporation, dba Carville Park Apartments' internal control over financial reporting and on our tests of its compliance with certain provisions of laws, regulations, contracts, and grant agreements and other matters. The purpose of that report is to describe the scope of our testing of internal control over financial reporting and compliance and the results of that testing, and not to provide an opinion on internal control over financial reporting or on compliance. That report is an integral part of an audit performed in accordance with *Government Auditing Standards* in considering Northern Nevada Building & Construction Trade Council Development Corporation's internal control over financial reporting and compliance.

Stule : Associates, LLC

Carson City, Nevada
August 22, 2018

Northern Nevada Building & Construction
Trade Council Development corporation
dba Carville Park Apartments
Statement of Financial Position
March 31, 2018

ASSETS

CURRENT ASSETS		
Cash and Equivalents	$	1,523
Accounts Receivable		12,393
Prepaid Expenses		36,899
Due from Related Party		63,730
TOTAL CURRENT ASSETS		114,545
PROPERTY AND EQUIPMENT		
Furniture and Equipment		810,479
Buildings and Improvements		2,449,624
Land and Improvements		1,292,464
		4,552,567
Less Accumulated Depreciation		(3,517,358)
TOTAL PROPERTY AND EQUIPMENT		1,035,209
OTHER ASSETS		
Tenant Deposits Held in Trust		48,869
Reserve for Replacements		13,079
TOTAL OTHER ASSETS		61,948
TOTAL ASSETS	$	1,211,702

LIABILITIES AND NET ASSETS

CURRENT LIABILITIES		
Accounts Payable	$	23,856
Accrued Liabilities		13,907
Tenant Security Deposits		23,726
Prepaid Rents		26,342
TOTAL CURRENT LIABILITIES/TOTAL LIABILITIES		87,831
NET ASSETS		1,123,871
TOTAL LIABILITIES AND NET ASSETS	$	1,211,702

See Accompanying Independent Auditor's Report & Notes to Financial Statements

Northern Nevada Building & Construction
Trade Council Development Corporation
dba Carville Park Apartments
Statement of Activities
For the Year Ended March 31, 2018

REVENUES	
Rental	$ 1,128,958
Interest Income	264
Tenant Charges	6,631
Laundry, Vending, and Miscellaneous	7,526
TOTAL REVENUE	1,143,379
EXPENSES	
Project Services	
Administrative	266,801
Utilities	168,123
Operating and Maintenance	467,583
Taxes and Insurance	132,555
Insurance and Employee Benefits	94,985
Depreciation	118,287
	1,248,334
Corporate Services	
Office Salaries	31,900
Office Expenses	20,865
	52,765
TOTAL EXPENSES	1,301,099
CHANGE IN NET ASSETS	(157,720)
NET ASSETS, MARCH 31, 2017	1,281,591
NET ASSETS, MARCH 31, 2018	$ 1,123,871

See Accompanying Independent Auditor's Report & Notes to Financial Statements

Northern Nevada Building & Construction
Trade Council Development Corporation
dba Carville Park Apartments
Statement of Cash Flows
For the Year Ended March 31, 2018

CASH FLOWS FROM OPERATING ACTIVITIES		
Rental Receipts	$	1,130,846
Interest Receipts		263
Other Receipts		14,909
Administrative Expenses Paid		(113,170)
Management Fees Paid		(117,312)
Utilities Expenses Paid		(168,123)
Salaries and Wages Paid		(243,229)
Operating and Maintenance Expenses Paid		(315,396)
Real Estate Taxes Paid		(59,659)
Property Insurance Paid		(50,429)
Miscellaneous Taxes and Insurance Paid		(114,378)
NET CASH USED BY OPERATING ACTIVITIES		(35,678)
CASH FLOWS FROM INVESTING ACTIVITIES		
Acquisition of Property and Equipment		(38,482)
Disbursements from Reserve for Replacements Account		28,000
Deposits and Interest Retained in Reserve for Replacements Account		(14,541)
NET CASH PROVIDED BY INVESTING ACTIVITIES		(25,023)
NET INCREASE (DECREASE) IN CASH AND CASH EQUIVALENTS		(60,701)
CASH AND CASH EQUIVALENTS, MARCH 31, 2017		62,224
CASH AND CASH EQUIVALENTS, MARCH 31, 2018	$	1,523

See Accompanying Independent Auditor's Report & Notes to Financial Statements

Northern Nevada Building & Construction
Trade Council Development Corporation
dba Carville Park Apartments
Statement of Cash Flows
For the Year Ended March 31, 2018

RECONCILIATION OF CHANGE IN NET ASSETS TO NET CASH USED BY OPERATING ACTIVITIES		
Decrease in Net Assets	$	(157,720)
Adjustments to Reconcile Increase (Decrease) in Net Assets to Net Cash Used By Operating Activities		
Depreciation Expense		118,287
(Increase) decrease in:		
Cash Restricted for Tenant Deposits Held in Trust		(1,110)
Accounts Receivable		1,039
Prepaid Expenses		(135)
(Decrease) increase in:		
Accounts Payable		(2,190)
Accrued Liabilities		3,440
Prepaid Rents		849
Tenant Security Deposits		1,862
NET CASH USED BY OPERATING ACTIVITIES	$	(35,678)

See Accompanying Accountant's Audit Report & Notes to Financial Statements

Northern Nevada Building & Construction
Trade Council Development Corporation
dba Carville Park apartments
Notes to Financial Statements
March 31, 2018

NOTE 1 – SUMMARY OF SIGNIFICANT ACCOUNTING POLICIES

1. Business Activity

   The Corporation was formed as a non-profit corporation under the laws of the State of Nevada on April 6, 1979. It was organized to construct, own, and operate a 208-unit rental apartment project in Reno, Nevada, knows as Carville Park Apartments.

   The Project is regulated by the U.S. Department of Housing and Urban Development (HUD) as to rent charges and operating methods. Lower rental charges to tenants are recovered by the Project through rent subsidies provided by HUD. The Section 8 program is a major HUD program.

2. Accounting Methods and Revenue Recognition

   The accompanying financial statements have been prepared on the accrual basis of accounting and in accordance with accounting principles generally accepted in the United States of America (GAAP), whereby income is recognized when earned and costs and expenses are recognized when the obligations are incurred. Accordingly, all significant receivables, payables, and other liabilities are reflected.

   The tenant leases are for one year and are accounted for as operating leases with rental income reported as earned over the term of the lease. Under the Housing Assistance contract, the Organization may not increase rents charged to tenants without prior HUD approval.

3. Basis of Presentation

   The financial statement presentation follows the recommendations of the Financial Accounting Standards Board in its FASB ASC 958-210-45-1, *Financial Statements for Not-for-Profit Organizations.* Under FASB ASC 958-210-45-1, the Project is required to report information regarding its financial position and activities according to three classes of net assets: 1) unrestricted net assets, which represents the expendable resources that are available for operations at management's discretion; 2) temporarily restricted net assets, which represents resources restricted by donors as to purpose or by the passage of time, and 3) permanently restricted net assets, which represents resources whose use by the Project is limited by donor-imposed stipulations that neither expire by passage of time nor can be fulfilled or otherwise removed by actions of the Project. As of March 31, 2018, there are no temporarily or permanently restricted net assets.

   Revenues are reported as increased in unrestricted net assets unless their use is limited by donor-imposed restrictions. Expenses are reported as decreases in unrestricted net assets. Gains and losses on investments and other assets or liabilities are reported as increases or decreases in unrestricted net assets unless their use is restricted by explicit donor stipulation or by law.

NOTE 1 - SUMMARY OF SIGNIFICANT ACCOUNTING POLICIES (CONTINUED)

4. Functional Allocation of Expenses

   Expenditures incurred in connection with project operations and expenditures made for corporate (mortgagor entity) purposes have been summarized on a functional basis in the Statement of Activities.

5. Property and Equipment

   Property and equipment are carried at cost or, if donated, at the approximate fair value at the date of donation. Fixed asset acquisitions in excess of $500 are capitalized and depreciation is provided using the straight-line method over the estimated useful lives of the buildings and related land improvements (15 – 40 years) and furnishings and equipment (5 – 7 years). Depreciation expense for the year ended March 31, 2018, was $116,533.

6. Cash and Cash Equivalents

   For purposes of the Statement of Cash Flows, the Project considers all unrestricted highly liquid investments purchased with original maturities of three months or less to be cash equivalents. At March 31, 2018, there were no cash equivalents.

7. Estimates

   The preparation of financial statements in conformity with generally accepted accounting principles requires management to make estimates and assumptions that affect the reported amounts of assets and liabilities and disclosure of contingent assets and liabilities at the date of the financial statements and the reported amounts of revenue and expenses during the reporting period. Actual results could differ from those estimates.

8. Investments

   Investments in marketable securities with readily determinable fair values and all investments in debt securities are reported at their fair values in the statements of financial position. Unrealized gains and losses are included in the statement of activities.

9. Concentrations of Credit Risk

   Financial instruments that potentially subject the Project to concentrations of credit risk consist principally of cash in banks, investment accounts, and tenant accounts receivable.

NOTE 1 – SUMMARY OF SIGNIFICANT ACCOUNTING POLICIES (CONTINUED)

9. Concentrations of Credit Risk (Continued)

The Project has funds in credit union accounts which are insured by the National Credit Union Association (NCUA) up to $250,000. On March 31, 2018, the Project's credit union account balances were within the NCUA limits.

The Project maintains its reserve funds in investment institutions. The investments that the Project holds consist of money market funds. The funds are insured by the Securities Investor Protection Corporation for the amount invested in the event of fraud, theft, or other such deceptive activity.

Concentrations of credit risk with respect to tenant accounts receivable are limited because all tenants are required to pay their rent monthly on the first of the month. However, since all of the Project's tenants live and work in the Northern Nevada area, the Project's ability to collect tenant accounts receivable may be affected by economic fluctuations in that geographic area.

The Project's primary asset is a 208-unit apartment project. The Project's operations are concentrated in the multifamily real estate market. In addition, the Project operates in a heavily regulated environment. The operations of the Project are subject to the administrative directives, rules and regulations of federal, state and local regulatory agencies, including, but not limited to, HUD. Such administrative directives, rules and regulations are subject to change by an act of congress or an administrative change mandated by HUD. Such changes may occur with little notice or inadequate funding to pay for the related cost, including the additional administrative burden, to comply with a change.

10. Bad Debts

Uncollectible accounts receivable are charged directly against operations when they are determined to be uncollectible. Use of this method does not result in a material difference from the valuation method required by generally accepted accounting principles.

11. Advertising and Marketing

Advertising and marketing costs are expensed as incurred. Advertising expense totaled $1,116 for the year ended March 31, 2018.

NOTE 1 - SUMMARY OF SIGNIFICANT ACCOUNTING POLICIES (CONTINUED)

12. Income Taxes

The Project is a nonprofit corporation that is exempt from federal income taxes under Section 501(c)(3) of the Internal Revenue Code. Accordingly, no liability for federal income taxes has been provided in the financial statements. It is the Project's tax position that it has not engaged in activities that would jeopardize its exempt status nor has it engaged in activities that would result in unrelated business income tax. The Project's Forms 990, *Return of Organization Exempt from Income Tax*, for the tax years ending 2016, 20172016 and 2018 are subject to examination by the IRS, generally for three years after they were filed.

13. Subsequent Events

In preparing these financial statements, the Project has evaluated events and transactions for potential recognition or disclosure through August 15, 2018, the date the financial statements were available to be issued. Subsequent events after that date have not been evaluated.

NOTE 2 – ALLOWABLE DISTRIBUTIONS

In accordance with HUD Handbook 4370.2 REV-1, CHG-1, *Financial Operations and Accounting Procedures for Insured Multifamily Projects,* page 2 – 12, distributions to owners are not permitted on non-profit projects. For the year ended March 31, 2018, there were no distributions made.

NOTE 3 – RELATED PARTY TRANSACTIONS

Transactions involving related parties cannot be presumed to be carried out on an arm's-length basis. Except for routine transactions, it is generally not possible to determine whether a particular transaction would have taken place if the parties had not been related or, assuming it would have taken place, what the terms and manner of settlement would have been.

Effective November 1, 1987, management of the Project was provided by the Building and Construction Trades Council of Northern Nevada, a non-profit corporation which elects the Board of Directors of the Northern Nevada Building & Construction Trade Council Development Corporation, dba Carville Park Apartments. The management fee is $47 per unit per month for a total paid of $107,536 during the year ended March 31, 2018, with $9,776 due and payable at March 31, 2018, bringing the total management fees expense to $117,312. The total amount unpaid at year end is included in accrued liabilities in the statement of financial position.

NOTE 3 – RELATED PARTY TRANSACTIONS (CONTINUED)

During the 2008 and 2009 fiscal years, the owners placed the property up for sale. During those two years, $72,630 was paid by the Project for various costs associated with the sale. These expenditures are an entity expense not a project expense and, as such, constitute an unauthorized distribution to the Project Owner. Therefore, the Owner is required to reimburse the Project for these expenditures. The amount is recorded as due from related party in the statement of financial position. During the year ended March 31, 2018, no payments were made on this receivable, leaving a balance due of $63,730.

NOTE 4 – HOUSING ASSISTANCE PAYMENTS

The Project has entered into a Housing Assistance Payments (HAP) contract, pursuant to Section 8 of the United States Housing Act of 1973.. The Partnership receives subsidies for 208 apartments which are rented to qualified low and very low income families in an amount which equals the difference between the Contract Rent, as determined by HUD, and 30% of the tenant's family income.

In addition, the HAP contract provides that the Corporation is entitled to Section 8 Subsidies in the amount of 80% of the Contract Rents for vacant apartments for a period not to exceed thirty days.

NOTE 5 – PENSION CONTRIBUTIONS

In connection with its collective bargaining agreement with the Communication Workers of America, AFL-CIO, the company participates with other companies in the communication industry in a defined benefit pension plan. The plan covers all of the company's employees who are members of the Communication Workers of America Union. The pension contribution expense for the year ended March 31, 2018, was $35,952.

Northern Nevada Building & Construction
Trade Council Development Corporation
dba Carville Park apartments
March 31, 2018

REPORTS REQUIRED BY THE UNIFORM GUIDANCE

Northern Nevada Building & Construction
Trade Council Development Corporation
dba Carville Park Apartments
Schedule of Expenditures of Federal Awards
For the Year ended March 31, 2018

FEDERAL GRANTOR/PASS-THROUGH GRANTOR/PROGRAM TITLE	FEDERAL CFDA NUMBER	FEDERAL EXPENDITURES
U.S. Department of Housing and Urban Development		
Section 8 Housing Assistance Payments	14.182	$ 786,136
Total Expenditures of Federal Awards		$ 786,136

Note 1 – Basis of Presentation

The accompanying schedule of expenditures of federal awards (the Schedule) includes the federal award activity of Northern Nevada building & Construction Trade Council Development Corporation, dba Carville Park Apartments, HUD Project No. 125-35077-NP, under programs of the federal government for the year ended March 31, 2018. The information in this Schedule is presented in accordance with the requirements of Title 2 U.S. *Code of Federal Regulations* Part 200, *Uniform Administrative Requirements, Cost Principles, and Audit Requirements for Federal Awards* (Uniform Guidance). Because the Schedule presents only a selected portion of the operations of Northern Nevada Building & Construction Trade Council Development Corporation, it is not intended to and does not present the financial position, changes in net assets, or cash flows of Northern Nevada Building & construction Trade Council Development Corporation.

Note 2 – Summary of Significant Accounting Policies

A. Expenditures reported on the schedule are reported on the accrual basis of accounting. Such expenditures are recognized following the cost principles contained in the Uniform Guidance, wherein certain types of expenditures are not allowable or are limited as to reimbursement.

B. The Project did not receive Federal Financial Assistance in the form of loans or loan guarantees, or in the form of endowment funds.

C. The schedule does not include matching expenditures.

D. Pass-through entity identifying numbers are presented where available.

Jonathan S. Steele, CPA CGMA

Steele
Certified Public Accountants

Vanessa L. Davis, CPA CGMA
Benjamin C. Steele, CPA CGMA Emeritus

INDEPENDENT AUDITOR'S REPORT ON INTERNAL CONTROL OVER FINANCIAL REPORTING AND ON COMPLIANCE AND OTHER MATTERS BASED ON AN AUDIT OF FINANCIAL STATEMENTS PERFORMED IN ACCORDANCE WITH *GOVERNMENT AUDITING STANDARDS*

To the Board of Directors of
Northern Nevada building & Construction
Trade Council Development Corporation
dba Carville Park Apartment
HUD Project No. 125-35077-NP
Reno, Nevada

We have audited, in accordance with the auditing standards generally accepted in the United States of America and the standards applicable to Financial audits contained in *Government Auditing Standards* issued by the Comptroller General of the United States, the financial statements of Northern Nevada Building & Construction Trade Council Development Corporation (a nonprofit organization), dba Carville Park Apartment, HUD Project No. 125-35077-NP, which comprise the statement of financial position as of March 31, 2018, and the related statements of activities and cash flows for the year then ended, and the related notes to the financial statements, and have issued our report thereon dated August 22, 2018.

Internal Control over Financial Reporting

In planning and performing our audit of the financial statements, we considered Northern Nevada Building & Construction Trade Council Development Corporation's internal control over financial reporting (internal control) to determine the audit procedures that are appropriate in the circumstances for the purpose of expressing our opinion on the financial statements, but not for the purpose of expressing an opinion on the effectiveness of Northern Nevada Building & Construction Trade Council Development Corporation's internal control. Accordingly, we do not express an opinion on the effectiveness of Northern Nevada Building & Construction Trade Council Development Corporation's internal control.

A *deficiency in internal control* exists when the design or operation of a control does not allow management or employees, in the normal course of performing their assigned functions, to prevent, or detect and correct, misstatements on a timely basis. A *material weakness* is a deficiency, or a combination of deficiencies, in internal control, such that there is a reasonable possibility that a material misstatement of the entity's financial statements will not be prevented or detected and corrected on a timely basis. A *significant deficiency* is a deficiency, or a combination of deficiencies, in internal control that is less severe than a material weakness, yet important enough to merit attention by those charged with governance.

611 N. Nevada Street
Carson City, Nevada 89703
Phone: (775) 882-7198
Fax: (775) 883-4346

Members of: CPA Connect
Nevada Society of Certified Public Accountants
American Institute of Certified Public Accountants
Affordable Housing Association of Certified Public Accountants

Our consideration of internal control was for the limited purpose described in the first paragraph of this section and was not designed to identify all deficiencies in internal control that might be material weaknesses or significant deficiencies in internal control that we consider to be material weaknesses. However, material weaknesses may exist that have not been identifies.

Compliance and Other Matters

As part of obtaining reasonable assurance about whether Northern Nevada Building & Construction Trade Council Development Corporation's financial statements are free from material misstatement, we performed tests of its compliance with certain provisions of laws, regulations, contracts, and grant agreements, noncompliance with which could have a direct and material effect on the determination of financial statement amounts. However, providing an opinion on compliance with those provisions was not an objective of our audit, and accordingly, we do not express such an opinion. The results of our tests disclosed no instances of noncompliance or other matters that are required to be reported under *Government Auditing Standards.*

Purpose of this Report

The purpose of this report is solely to describe the scope of our testing of internal control and compliance and the results of that testing, and not to provide an opinion on the effectiveness of the organization's internal control or on compliance. This report is an integral part of an audit performed in accordance with *Government Auditing Standards* in considering the organization's internal control and compliance, Accordingly, this communication is not suitable for any other purpose.

Stule: Associates, LLC

Carson City, Nevada
August 22, 2018

Jonathan S. Steele, CPA CGMA

Steele
Certified Public Accountants

Vanessa L. Davis, CPA CGMA
Benjamin C. Steele, CPA CGMA Emeritus

INDEPENDENT AUDITOR'S REPORT ON COMPLIANCE FOR EACH MAJOR PROGRAM AND ON INTERNAL CONTROL OVER COMPLIANCE REQUIRED BY THE UNIFORM GUIDANCE

To the Board of Directors of
Northern Nevada Building & Construction
Trade Council Development Corporation
dba Carville Park Apartments
HUD Project No. 125-35077-NP
Reno, Nevada

Report on Compliance for Each Major Federal Program

We have audited Northern Nevada Building & Construction Trade Council Development Corporation, dba Carville Park Apartments' compliance with the types of compliance requirements described in the *OMB Compliance Supplement* that could have a direct and material effect on each of Northern Nevada Building & Construction Trade Council Development Corporation's major federal programs for the year ended March 31, 2018. Northern Nevada Building & Construction Trade Council Development Corporation's major federal programs are identified in the summary of auditor's results section of the accompanying schedule of findings and questioned costs.

Management's Responsibility

Management is responsible for compliance with the requirements of laws, regulations, contracts, and grants applicable to its federal programs.

Auditor's Responsibility

Our responsibility is to express an opinion on compliance for each of Northern Nevada Building & Construction Trade Council Development Corporation's major federal programs based on our audit of the types of compliance requirements referred to above. We conducted our audit of compliance in accordance with auditing standards generally accepted in the United States of America; the standards applicable to financial audits contained in *Governmental Auditing* Standards, issued by the Comptroller General of the United States; and the audit requirements of Title 2 U.S. *Code of Federal Regulations* Part 200, *Uniform Administrative Requirements, Cost Principles, and Audit Requirements for Federal Awards* (Uniform Guidance). Those standards and the Uniform Guidance require that we plan and perform the audit to obtain reasonable assurance about whether noncompliance with the types of compliance requirements referred to above that could have a direct and material effect on a major federal program occurred. An audit includes examining, on a test basis, evidence about Northern Nevada Building & Construction Trade Council Development Corporation's compliance with those requirements and performing such other procedures as we considered necessary in the circumstances.

611 N. Nevada Street
Carson City, Nevada 89703
Phone: (775) 882-7198
Fax: (775) 883-4346

Members of: CPA Connect
Nevada Society of Certified Public Accountants
American Institute of Certified Public Accountants
Affordable Housing Association of Certified Public Accountants

We believe that our audit provides a reasonable basis for our opinion on compliance for each major federal program. However, our audit does not provide a legal determination of Northern Nevada Building & Construction Trade Council Development Corporation's compliance.

Opinion on Each Major Federal Program

In our opinion, Northern Nevada Building & Construction Trade Council Development Corporation complied, in all material respects, with the types of compliance requirements referred to above that could have a direct and material effect on each of its major federal programs for the year ended March 31, 2018.

Report on Internal Control over Compliance

Management of Northern Nevada Building & Construction Trade Council Development Corporation is responsible for establishing and maintaining effective internal control over compliance with the types of compliance requirements referred to above. In planning and performing our audit of compliance, we considered Northern Nevada Building & Construction Trade Council Development Corporation's internal control over compliance with the types of requirements that could have a direct and material effect on each major federal program to determine the auditing procedures that are appropriate in the circumstances for the purpose of expressing an opinion on compliance for each major federal program and to test and report on internal control over compliance in accordance with the Uniform Guidance, but not for the purpose of expressing an opinion on the effectiveness of internal control over compliance. Accordingly, we do not express an opinion on the effectiveness of Northern Nevada Building & Construction Trade Council Development Corporation's internal control over compliance.

A *deficiency in internal control over compliance* exists when the design or operation of a control over compliance does not allow management or employees, in the normal course of performing their assigned functions, to prevent, or detect and correct, noncompliance with a type of compliance requirement of a federal program on a timely basis. A *material weakness in internal control over compliance* is a deficiency, or combination of deficiencies, in internal control over compliance, such that there is a reasonable possibility that material noncompliance with a type of compliance requirement of a federal program will not be prevented, or detected and corrected, on a timely basis. A *significant deficiency in internal control over compliance* is a deficiency, or a combination of deficiencies, in internal control over compliance with a type of compliance requirement of a federal program that is less severe than a material weakness in internal control over compliance, yet important enough to merit attention by those charged with governance.

Our consideration of internal control over compliance was for the limited purpose described in the first paragraph of this section and was not designed to identify all deficiencies in internal control over compliance that might be material weaknesses or significant deficiencies. We did not identify any deficiencies in internal control over compliance that we consider to be material weaknesses. However, material weaknesses may exist that have not been identified.

The purpose of this report on internal control over compliance is solely to describe the scope of our testing of internal control over compliance and the results of that testing based on the requirements of the Uniform Guidance. Accordingly, this report is not suitable for any other purpose.

Stuhl: Associates, LLC

Carson City, Nevada
August 22, 2018

Northern Nevada Building & Construction
Trade Council Development Corporation
dba Carville Park Apartments
Schedule of Findings and Questioned Costs
For the Year Ended March 31, 2018

A. Summary of Audit Results

1. The auditor's report expresses an unmodified opinion on whether the financial statements of Northern Nevada Building & Construction Trade Council Development Corporation were prepared in accordance with GAAP.

2. No deficiencies material to the financial statements of Northern Nevada Building & Construction Trade Council Development Corporation were disclosed during the audit. No material weaknesses are reported.

3. No instances of noncompliance material to the financial statement of Northern Nevada Building & Construction Trade Council Development corporation were disclosed during the audit.

4. No deficiencies in internal control over major federal award programs were noted during the audit. No material weaknesses are reported

5. The auditor's report on compliance for the major federal award programs for Northern Nevada Building & Construction Trade Council Development Corporation expresses an unmodified opinion on all major federal programs.

6. Audit findings that are required to be reported in accordance with 2 CFR section 200.516(a) are reported in this Schedule.

7. The program tested as a major program was Section 8 Housing Assistance Payments CFDA#14.182.

8. The threshold for distinguishing Types A and B programs was $750,000.

9. Northern Nevada Building & Construction Trade Council Development corporation was determined to be a low-risk auditee.

Northern Nevada Building & Construction
Trade Council Development Corporation
dba Carville Park Apartments
HUD PROJECT NO. 125-35077-NP

CERTIFICATE OF PROJECT OWNER

We hereby certify that we have examined the accompanying financial statements and supplemental data of Northern Nevada Building & Construction Trade Council Development Corporation, and to the best of our knowledge and belief, the same are accurate and complete.

9/13/18
Date

Russ James
Russ James, President

09/13/2018
Date

Paul D. McKenzie
Paul D. McKenzie, Secretary/Treasurer

Northern Nevada Building & Construction
Trade Council Development Corporation
dba Carville Park Apartments
HUD PROJECT NO. 125-35077-NP

CERTIFICATE OF MANAGING AGENT

We hereby certify that we have examined the accompanying financial statements and supplemental data of Northern Nevada Building & Construction Trade Council Development Corporation and to the best of our knowledge and belief, the same are accurate and complete.

9/13/18
Date

Russ James, President

Building & Construction Trade Council
of Northern Nevada

Management Agent Employer Identification Number 88-0025643

COMMUNICATIONS WITH GOVERNANCE

Jonathan S. Steele, CPA CGMA

Steele
Certified Public Accountants

Vanessa L. Davis, CPA CGMA
Benjamin C. Steele, CPA CGMA Emeritus

To the Board of Directors
Northern Nevada Building & Construction
Trade Council Development Corporation

We have audited the basic financial statements of the Northern Nevada Building & Construction Trad Council Development Corporation for the year ended March 31, 2018, and have issued our report thereon dated August 15, 2018. Professional standards require that we provide you with the following information related to our audit.

Our Responsibility under U.S. Generally Accepted Auditing Standards

As stated in our engagement letter dated July 1, 2016, our responsibility as described by professional standards, is to express opinions about whether the financial statements prepared by management with your oversight are fairly presented, in all material respects in conformity with U.S. generally accepted accounting principles. Our audit of the financial statements does not relieve you or management or your responsibilities.

Significant Audit Findings

Qualitative Aspects of Accounting Practices

Management is responsible for the selection and use of appropriate accounting policies. The significant accounting policies used by the Northern Nevada Building & Construction Trade Council Development Corporation are described in the financial statements. No new accounting policies were adopted and the application of existing policies was not changed during the 2017/2018 fiscal year. We noted no transactions entered into by the organization during the year for which there is a lack of authoritative guidance or consensus. There are no significant transactions that have been recognized in the financial statements in a different period than when the transaction occurred.

Accounting estimates are an integral part of the financial statements prepared by management and are based on management's knowledge and experience about past and current events and assumptions about future events. Certain accounting estimates are particularly sensitive because of their significance to the financial statements and because of the possibility that future events affecting them may differ significantly from those expected. The most sensitive estimate affecting the financial statement was management's determination that all accounts receivable are collectible at year end. We evaluated the key factors and assumptions used to develop the estimate of collectability in determining what is reasonable in relation to the financial statements taken as a whole.

611 N. Nevada Street
Carson City, Nevada 89703
Phone: (775) 882-7198
Fax: (775) 883-4346

Members of: CPA Connect
Nevada Society of Certified Public Accountants
American Institute of Certified Public Accountants
Affordable Housing Association of Certified Public Accountants

Difficulties Encountered in Performing the Audit

We encountered no significant difficulties in dealing with management in performing and completing our audit.

Corrected and Uncorrected Misstatements

Professional standards require us to accumulate all known and likely misstatements identified during the audit, other than those that are trivial, and communicate them to the appropriate level of management. Management has corrected all such misstatements. No material misstatements were detected as a result of audit procedures.

Disagreements with Management

For purposes of this letter, professional standards define a disagreement with management as a financial accounting, reporting, or auditing matter, whether or not resolved to our satisfaction, that could be significant to the financial statements or the auditor's report. We are pleased to report that no such disagreements arose during the course of our audit.

Management Representations

We have requested certain representations from management that are included in the management representation letter dated August 15, 2018.

Management Consultations with Other Independent Accountants

In some cases, management may decide to consult with other accountants about auditing and accounting matters, similar to obtaining a "second opinion" on certain situations. If a consultation involves application of an accounting principle to the governmental unit's financial statements or a determination of the type of auditor's opinion that may be expressed on those statements, our professional standards require the consulting accountant to check with us to determine that the consultant has all the relevant facts. To our knowledge, there were no such consultations with other accountants.

Other Audit Findings or Issues

We generally discuss a variety of matters, including the application of accounting principles and auditing standards, with management each year prior to retention as the governmental unit's auditors. However, these discussions occurred in the normal course of our professional relationship and our responses were not a condition of our retention.

As required by generally accepted auditing standards and the terms of our engagement, in planning and performing our audit, we considered the internal control solely to determine the auditing procedures to be employed for the purpose of enabling us to express our opinion on the financial statements and not for the purpose of expressing an opinion on the effectiveness of the District's internal control over financial reporting. Therefore, we express no opinion or other form of assurance thereon.

A deficiency in internal control exists when the design or operation of a control does not allow management or employees, in the normal course of performing their assigned functions, to prevent or detect and correct misstatements on a timely basis. A material weakness is a deficiency, or combination of deficiencies, in internal control such that there is a reasonable possibility that a material misstatement of the entity's financial statements will not be prevented, or detected and corrected on a timely basis. A significant deficiency is a deficiency, or combination of deficiencies in internal control that is less severe than a material weakness, yet important enough to merit attention by those charged with governance. Our report on Internal Control over Financial Reporting and on Compliance and Other Matters Based on an Audit of Financial Statements Performed in Accordance with *Government Auditing Standards* dated August 15, 2018, noted no significant deficiencies or material weaknesses.

This information is intended solely for the use of management and the Organization's Board of Directors and is not intended to be and should not be used by anyone other than these specified parties.

Steele : Associates, LLC

Carson City, Nevada
August 15, 2018

EXHIBIT 8F

FINANCIAL PROJECTIONS

Reno, Nevada

Carville Park Apts

Prepared for: **City of Reno, Neighborhood Services Departments**
1 East First Street Reno, NV 89501

Prepared by: **The Canopy Companies (the "Developer")**
801 E Quincy St San Antonio, TX 78205

The Northern Nevada Building & Construction Trades Council Development Corporation
1819 Hymer Avenue, Suite 106 Sparks NV 89431

The Canopy Companies
Victor Atkins - Partner
805-708-1195
victor@thecanopyco.com

This financial model (the "Model") is provided by The Canopy Companies (the "Company") for informational purposes only and is intended for use solely by the intended recipient. The Model, including any and all information, data, and materials contained therein, is considered confidential and proprietary to The Canopy Companies. By accessing or using this financial model, you acknowledge and agree that the information contained herein is privileged and should be treated as strictly confidential.

You shall not disclose, share, or disseminate any part of this financial model or its contents, be it in whole or in part, to any third party, unless expressly authorized in writing by The Canopy Companies. Furthermore, you are required to take all reasonable measures to protect the confidentiality of this financial model and prevent unauthorized access or use.

The financial projections and estimates contained in the subsequent financial model are provided for illustrative purposes only and are based on a range of hypothetical assumptions and events, many of which are beyond the Company's control or influence. Furthermore, the preparation of this financial model involves the adoption of various simplifying assumptions that may not fully capture the complexities of the business environment.

The selection and application of these assumptions involve the exercise of judgment and are inherently uncertain due to the potential impact of economic, legislative, or other external factors on future occurrences. While the Company has endeavored to rely on assumptions that it considers most relevant and significant to the financial model, not all assumptions utilized have been explicitly stated, and certain simplifying assumptions have been employed.

It is important to note that deviations in the underlying assumptions could lead to substantial variations in the projected outcomes. As a result, the actual performance of the Company may differ significantly from the forecasts and estimates presented in this financial model. Users of this financial model are advised to exercise caution and not to place undue reliance on these projections when making decisions related to the Company's financial outlook.

The Company disclaims any obligation or responsibility to update or revise the financial model or any of the assumptions contained herein, whether as a result of new information, future events, or otherwise. The financial model is provided on an "as is" basis, and the Company makes no representations or warranties of any kind, express or implied, regarding the accuracy, reliability, or completeness of the information contained herein.

Development & Construction Costs
Carville Park Apts
Base Case

Description	Tax Treatment	New-Rehab EB	Acquisition EB	Historic QRE	Energy EB	Ineligible	Total Cost (TDC)	TDC PU	TDC PNRSF	% TDC
Acquisition Costs										
Land Cost: $0.0 PLSF	None	-	-	-	-	-	-	-		-
Personal Property: $1,000 PU	Depreciated - PP	-	209,000	-	-	-	209,000	1,000	2.7	0.4%
Building: $51,632 PU	Depreciated - RP	-	10,791,000	-	-	-	10,791,000	51,632	137.4	19.5%
Interest: Pursuit Cost Loans	Depreciated - RP	-	19,190	-	-	-	19,190	92	0.2	0.0%
Transaction Legal	Depreciated - RP	-	50,000	-	-	-	50,000	239	0.6	0.1%
Title	Depreciated - RP	-	11,000	-	-	-	11,000	53	0.1	0.0%
Acquisition Costs		**-**	**11,080,190**	**-**	**-**	**-**	**11,080,190**	**53,015**	**141.1**	**20.0%**
Construction Costs										
GC Base Contract	See Detail	18,399,679	-	-	1,969,262	-	18,399,679	88,037	234.4	33.2%
GC Contingency: 5.0%	Depreciated - RP	919,984	-	-	98,463	-	919,984	4,402	11.7	1.7%
GC General Requirements: 6.0%	Depreciated - RP	1,159,180	-	-	124,064	-	1,159,180	5,546	14.8	2.1%
GC Overhead: 2.0%	Depreciated - RP	386,393	-	-	41,355	-	386,393	1,849	4.9	0.7%
GC Profit: 6.0%	Depreciated - RP	1,159,180	-	-	124,064	-	1,159,180	5,546	14.8	2.1%
Payment & Performance Bonds: 1.0%	Depreciated - RP	220,244	-	-	23,572	-	220,244	1,054	2.8	0.4%
Base Case Contingency: 10.0%	Depreciated - RP	2,224,466	-	-	238,078	-	2,224,466	10,643	28.3	4.0%
Construction Costs		**24,469,126**	**-**	**-**	**2,618,857**	**-**	**24,469,126**	**117,077**	**311.7**	**44.1%**
Soft Costs										
Architect Fee - Design	Depreciated - RP	242,880	-	-	-	-	242,880	1,162	3.1	0.4%
Architect Fee - Supervision	Depreciated - RP	99,200	-	-	-	-	99,200	475	1.3	0.2%
Engineering	Depreciated - RP	200,000	-	-	-	-	200,000	957	2.5	0.4%
Survey	Depreciated - RP	25,000	-	-	-	-	25,000	120	0.3	0.0%
Environmental	Depreciated - RP	25,000	-	-	-	-	25,000	120	0.3	0.0%
Housing Consultant	Depreciated - RP	60,000	-	-	-	-	60,000	287	0.8	0.1%
Appraisal	Depreciated - RP	12,500	-	-	-	-	12,500	60	0.2	0.0%
Market Study/RCS	Depreciated - RP	25,000	-	-	-	-	25,000	120	0.3	0.0%
Permits Fees	Depreciated - RP	87,403	-	-	-	-	87,403	418	1.1	0.2%
Zoning Fees	Depreciated - RP	27,500	-	-	-	-	27,500	132	0.4	0.0%
Legal (Construction)	Depreciated - RP	50,000	-	-	-	-	50,000	239	0.6	0.1%
Accounting Fees	Depreciated - RP	35,000	-	-	-	-	35,000	167	0.4	0.1%
Legal, Accounting & Other Synd	None	25,000	-	-	-	-	25,000	120	0.3	0.0%
Inspections	Depreciated - RP	4,800	-	-	-	-	4,800	23	0.1	0.0%
Tax Credit Fees (Application, Reservation, Energy Audit)	None	-	-	-	-	232,312	232,312	1,112	3.0	0.4%
Cost Certification	Depreciated - RP	20,000	-	-	-	-	20,000	96	0.3	0.0%
Capital Needs Assessment	Depreciated - RP	7,500	-	-	-	-	7,500	36	0.1	0.0%
Relocation	Depreciated - RP	-	-	-	-	1,600,000	1,600,000	7,656	20.4	2.9%
Lease-up/Start-up Costs	Expensed	-	-	-	-	50,000	50,000	239	0.6	0.1%
Marketing/Branding	Expensed	-	-	-	-	50,000	50,000	239	0.6	0.1%
Organizational Cost	None	50,000	-	-	-	-	50,000	239	0.6	0.1%
Borrower/Buyer Counsel	Amortized	50,000	-	-	-	-	50,000	239	0.6	0.1%
Capitalized Carrying Charges	Depreciated - RP	614,022	-	-	-	-	614,022	2,938	7.8	1.1%
Soft Cost Contingency: 10.0%	Depreciated - RP	359,312	-	-	-	-	359,312	1,719	4.6	0.6%
Soft Costs		**2,020,117**	**-**	**-**	**-**	**1,932,312**	**3,952,430**	**18,911**	**50.3**	**7.1%**

Development & Construction Costs
Carville Park Apts
Base Case

Description	Tax Treatment	New-Rehab EB	Acquisition EB	Historic QRE	Energy EB	Ineligible	Total Cost (TDC)	TDC PU	TDC PNRSF	% TDC
Financing Costs										
Constr: Origination Fee (175 bps of Loan)	Depreciated - RP	770,000	-	-	-	-	770,000	3,684	9.8	1.4%
Constr: Other Costs & Fees	Depreciated - RP	100,000	-	-	-	-	100,000	478	1.3	0.2%
Constr: Loan Interest: $5,032,413 calc.	Depreciated - RP	4,891,013	-	-	-	141,400	5,032,413	24,079	64.1	9.1%
Constr: Upfront MIP (2-years Capitalized)	Depreciated - RP	119,375	-	-	-	-	119,375	571	1.5	0.2%
NV State IB: Origination Fees (100 bps of Loan)	Amortized	-	-	-	-	70,000	70,000	335	0.9	0.1%
TE Bond: Issuance Costs (2% of Issuance)	Amortized	-	-	-	-	600,000	600,000	2,871	7.6	1.1%
TE Bond: Trustee Fees & Other Costs	Amortized	-	-	-	-	50,000	50,000	239	0.6	0.1%
221(d)(4): Application Fee (3 bps of Loan)	Amortized	-	-	-	-	71,625	71,625	343	0.9	0.1%
221(d)(4): Inspection Fee (5 bps of Renovation Cost)	Amortized	-	-	-	-	123,669	123,669	592	1.6	0.2%
TC Equity: Syndicator Legal & Due Diligence	None	-	-	-	-	100,000	100,000	478	1.3	0.2%
Financing Costs		**5,880,388**	**-**	**-**	**-**	**1,156,694**	**7,037,082**	**33,670**	**89.6**	**12.7%**
Working Capital Requirements										
Perm: Operating Cash	None	-	-	-	-	356,220	558,329	2,671	7.1	1.0%
Perm: Operating Reserve: $581,749 calc.	None	-	-	-	-	550,399	550,399	2,633	7.0	1.0%
Perm: Debt Service Reserve: $843,131 calc.	None	-	-	-	-	843,131	843,131	4,034	10.7	1.5%
Working Capital Requirements		**-**	**-**	**-**	**-**	**2,833,469**	**1,951,858**	**9,339**	**24.9**	**3.5%**
Developer Fee										
Base Developer Fee:	Depreciated - RP	4,855,445	1,662,029	-	392,828	463,351	6,980,824	33,401	88.9	12.6%
Developer Fee		**4,855,445**	**1,662,029**	**-**	**392,828**	**463,351**	**6,980,824**	**33,401**	**88.9**	**12.6%**
Total		**37,225,076**	**12,742,219**	**-**	**3,011,685**	**6,385,826**	**55,471,509**	**265,414**	**706.6**	**100.0%**

Pre-Development Timeline
Carville Park Apts
Base Case

Pre-Development

Acquisition

Partnership MOU Executed		January, 1 2023
PSA Effective Date	**	November, 1 2023
Target Closing Date	**	March, 15 2024
Contractual Closing Date	**	July, 18 2024

Zoning

SPD Zoning & Master Plan Amendment Submission		April, 4 2023
Planning Staff Meeting		April, 27 2023
Neighborhood Advisory Board (NAB) Presentation		June, 4 2023
Planning Commission Presentation		June, 6 2023
City Council ZoningApproval		July, 25 2023
Formal Zoning Approval		August, 9 2023

HUD MUTM

HUD MUTM Concept Meeting		February, 6 2023
RCS Finalized		June, 30 2023
MUTM Application Submission		August, 1 2023
HUD MUTM Formal Approval	**	January, 1 2024

Architecture

Architect Engaged		March, 21 2023
Permit Set Submission	**	November, 16 2023
Architectural Plan Review Complete	**	December, 16 2023
Building Permit Issued	**	January, 15 2024

Funding

HUD 221(d)(4)

HUD 221(d)(4) Initial Concept Call		May, 15 2023
HUD 221(d)(4) Application Submission		September, 15 2023
HUD 221(d)(4) Firm Commitment	**	January, 15 2024
Loan Closing and Disbursement	**	March, 15 2024

TE Bonds

Bond Application Submission		August, 26 2023
Inducement Certificate Issued		September, 29 2023
TEFRA Hearing	**	October, 31 2023
State board of finance approval	**	December, 7 2023
Funds deposited with Trustee	**	January, 10 2024
Initial Draw	**	March, 15 2024

HOME AHMLP

HOME AHMLP Application Submission		January, 9 2023
First Public Hearing		February, 14 2023
Second Public Hearing		March, 14 2023
Final Public Hearing		April, 11 2023
HOME AHMLP Formal Board Approval		May, 15 2023
HOME AHMLP Regional Planning Board Ratification		July, 30 2023

NIB

NIB Application Submission		June, 8 2023
NIB Application Review Complete		October, 6 2023
NIB Term Sheet Issued	**	October, 31 2023
NIB Formal Award	**	December, 30 2023

Equity

Equity Commitment Issued		September, 30 2023
Equity Investor Admission	**	March, 15 2024

Footnotes
** Denotes projected milestone

Development Timeline
Carville Park Apts
Base Case

Key Dates

Closing / Investor Admission		March 2024
Stabilization	**	March 2026
Loan Conversion		March 2026
Final Equity Installment		October 2026
Compliance Period Start		January 2025
Cost Certification Complete		April 2026
8609s Issued		July 2026
Final Amended & Restated Tax Returns Complete		October 2026
Cost Certification Complete		April 2026
1st LIHTC Credit Year		2025
1st Full LIHTC Credit Year		2026

Construction

Milestones

Construction start	April 2024
Construction 50% complete	February 2025
Construction 75% complete	August 2025
Construction 100% complete	January 2026

Building delivery

1240 Carville Dr	February 2025
1242 Carville Dr	February 2025
1260 Carville Dr	February 2025
1258 Carville Dr	June 2025
1254 Carville Dr	June 2025
1252 Carville Dr	June 2025
1250 Carville Dr	October 2025
1248 Carville Dr	October 2025
1256 Carville Dr	December 2025
1246 Carville Dr	December 2025
Club House	December 2025

Lease-up

Relocation

Phase I	Mar 2024 - Mar 2025
Phase II	Sep 2024 - Jun 2025
Phase III	Mar 2025 - Nov 2025
Phase IV	May 2025 - Jan 2025

Qualified occupancy

1240 Carville Dr	March 2025
1242 Carville Dr	March 2025
1260 Carville Dr	March 2025
1258 Carville Dr	July 2025
1254 Carville Dr	July 2025
1252 Carville Dr	July 2025
1250 Carville Dr	November 2025
1248 Carville Dr	November 2025
1256 Carville Dr	January 2026
1246 Carville Dr	February 2026
Club House	February 2026

Footnotes
** Stabilization: 90%+ Physical Occupancy for three consecutive months

Tax Credit Basis & Credit Support Calculations
Carville Park Apts
Base Case

	Fed. New-Rehab LIHTC	Fed. Acquisition LIHTC	Fed. Historic HTC	Fed. Energy ITC	Fed. Energy 45L	NV State LIHTC	NV State Historic	NV State Other
Eligible Basis								
Eligible Development Costs	32,369,631	11,080,190	-	2,618,857	NA	NA	-	
Plus: Eligible Acquisition Fees	-	-	-	-	-	-	-	
Plus: Eligible Development Fees	4,855,445	1,662,029	-	392,828	-	-	-	
Less: Historic Credits	-	-	-	-	-	-	-	
Less: Energy Credits	-	-	-	-	-	-	-	
Less: Federal Grants	-	-	-	-	-	-	-	
Less: Reduction For TE Bond Financing				(451,753)				
Eligible Basis	**37,225,076**	**12,742,219**	**-**	**2,559,932**	**-**	**-**	**-**	**-**
Basis Boost	130%	100%	100%	100%	100%	100%	100%	100%
Total Eligible Basis	**48,392,598**	**12,742,219**	**-**	**2,559,932**	**-**	**-**	**-**	**-**
Applicable Fraction	100%	100%	100%	100%	100%	100%	100%	100%
Qualified Basis	**48,392,598**	**12,742,219**	**-**	**2,559,932**	**-**	**-**	**-**	**-**
Credits								
Qualified Basis	-	-	-	-	-	-	-	-
Applicable Percentage	4.00%	4.00%	20.00%	50.00%	-	100.00%	100.00%	100.00%
Calculated Annual Tax Credits	**1,935,704**	**509,689**	**-**	**1,279,966**	**522,500**	**3,000,000**	**-**	**-**
Annual Tax Credit Reservation	-	-	-	-	-	3,000,000	-	-
Limit to Reservation	**1,935,704**	**509,689**	**-**	**1,279,966**	**522,500**	**3,000,000**	**-**	**-**
Number of Years Available	10 Yrs	10 Yrs	5 Yrs	1 Yrs	1 Yrs	1 Yrs	-	-
Total Tax Credits	**19,357,039**	**5,096,888**	**-**	**1,279,966**	**522,500**	**3,000,000**	**-**	**-**
	-	-	-	-	-			
Credit Equity								
Investment Member %	99.90%	99.90%	99.90%	0.09%	0.09%	100.00%	99.90%	99.90%
Fund Tax Credit Allocation	**19,337,682**	**5,091,791**	**-**	**1,152**	**470**	**3,000,000**	**-**	**-**
Tax Credit Price	0.83	0.83	0.89	-	-	0.92	-	-
Tax Credit Equity	**15,953,588**	**4,200,727**	**-**	**-**	**-**	**2,760,000**	**-**	**-**

Key Tests
Carville Park Apts
Base Case

Bonds

50% Bond Test		**95-5 Test**	
Tax Exempt bonds	30,000,000	Tax Exempt bonds	30,000,000
(only non-recycled bonds)			
Depreciable Basis	49,936,383	Qualified Costs	45,790,515
Plus: Land Cost	-	Unqualified Costs	10,562,605
Aggregate Basis	**49,936,383**	**Financed Percentage**	**152.64%**
Financed Percentage	**60.08%**		**PASS**
	PASS		

Substancial Rehab Test

LIHTC		**HTC**	
Acquisition Basis	12,742,219	Acquisition Basis	12,742,219
(includes eligible developer fees)		*(includes eligible developer fees)*	
Rehab Basis	37,225,076		-
Rehab Basis Per Unit	**178,110**	**Rehab Basis Per Unit**	**-**
Rehab % of Adjusted Acquisition	**292.1%**	**Rehab % of Adjusted Acquisition**	**0.0%**
	PASS		**NA**
PASS		**NA**	

Pre-Development Timeline
Carville Park Apts
Base Case

Pre-Development

Acquisition

Partnership MOU Executed		January, 1 2023
PSA Effective Date	**	November, 1 2023
Target Closing Date	**	March, 15 2024
Contractual Closing Date	**	July, 18 2024

Zoning

SPD Zoning & Master Plan Amendment Submission		April, 4 2023
Planning Staff Meeting		April, 27 2023
Neighborhood Advisory Board (NAB) Presentation		June, 4 2023
Planning Commission Presentation		June, 6 2023
City Council ZoningApproval		July, 25 2023
Formal Zoning Approval		August, 9 2023

HUD MUTM

HUD MUTM Concept Meeting		February, 6 2023
RCS Finalized		June, 30 2023
MUTM Application Submission		August, 1 2023
HUD MUTM Formal Approval	**	January, 1 2024

Architecture

Architect Engaged		March, 21 2023
Permit Set Submission	**	November, 16 2023
Architectural Plan Review Complete	**	December, 16 2023
Building Permit Issued	**	January, 15 2024

Funding

HUD 221(d)(4)

HUD 221(d)(4) Initial Concept Call		May, 15 2023
HUD 221(d)(4) Application Submission		September, 15 2023
HUD 221(d)(4) Firm Commitment	**	January, 15 2024
Loan Closing and Disbursement	**	March, 15 2024

TE Bonds

Bond Application Submission		August, 26 2023
Inducement Certificate Issued		September, 29 2023
TEFRA Hearing	**	October, 31 2023
State board of finance approval	**	December, 7 2023
Funds deposited with Trustee	**	January, 10 2024
Initial Draw	**	March, 15 2024

HOME AHMLP

HOME AHMLP Application Submission		January, 9 2023
First Public Hearing		February, 14 2023
Second Public Hearing		March, 14 2023
Final Public Hearing		April, 11 2023
HOME AHMLP Formal Board Approval		May, 15 2023
HOME AHMLP Regional Planning Board Ratification		July, 30 2023

NIB

NIB Application Submission		June, 8 2023
NIB Application Review Complete		October, 6 2023
NIB Term Sheet Issued	**	October, 31 2023
NIB Formal Award	**	December, 30 2023

Equity

Equity Commitment Issued		September, 30 2023
Equity Investor Admission	**	March, 15 2024

Footnotes
** Denotes projected milestone

Development Timeline
Carville Park Apts
Base Case

Key Dates

Closing / Investor Admission		March 2024
Stabilization	**	March 2026
Loan Conversion		March 2026
Final Equity Installment		October 2026
Compliance Period Start		January 2025
Cost Certification Complete		April 2026
8609s Issued		July 2026
Final Amended & Restated Tax Returns Complete		October 2026
Cost Certification Complete		April 2026
1st LIHTC Credit Year		2025
1st Full LIHTC Credit Year		2026

Construction

Milestones

Construction start	April 2024
Construction 50% complete	February 2025
Construction 75% complete	August 2025
Construction 100% complete	January 2026

Building delivery

1240 Carville Dr	February 2025
1242 Carville Dr	February 2025
1260 Carville Dr	February 2025
1258 Carville Dr	June 2025
1254 Carville Dr	June 2025
1252 Carville Dr	June 2025
1250 Carville Dr	October 2025
1248 Carville Dr	October 2025
1256 Carville Dr	December 2025
1246 Carville Dr	December 2025
Club House	December 2025

Lease-up

Relocation

Phase I	Mar 2024 - Mar 2025
Phase II	Sep 2024 - Jun 2025
Phase III	Mar 2025 - Nov 2025
Phase IV	May 2025 - Jan 2025

Qualified occupancy

1240 Carville Dr	March 2025
1242 Carville Dr	March 2025
1260 Carville Dr	March 2025
1258 Carville Dr	July 2025
1254 Carville Dr	July 2025
1252 Carville Dr	July 2025
1250 Carville Dr	November 2025
1248 Carville Dr	November 2025
1256 Carville Dr	January 2026
1246 Carville Dr	February 2026
Club House	February 2026

Footnotes
** Stabilization: 90%+ Physical Occupancy for three consecutive months

Construction Period Flow of Funds
Carville Park Apts
Base Case

Integrity: OK		*Forecast*	*Forecast*	*Forecast*	*Forecast*	*Forecast*	*Forecast*	*Forecast*	*Forecast*	*Forecast*	*Forecast*	*Forecast*	*Forecast*	*Forecast*	*Forecast*	*Forecast*
Signals: OK		Closing	Mnth 1	Mnth 2	Mnth 3	Mnth 4	Mnth 5	Mnth 6	Mnth 7	Mnth 8	Mnth 9	Mnth 10	Mnth 11	Mnth 12	Mnth 13	Mnth 14
Period Start		15-Mar-24	01-Apr-24	01-May-24	01-Jun-24	01-Jul-24	01-Aug-24	01-Sep-24	01-Oct-24	01-Nov-24	01-Dec-24	01-Jan-25	01-Feb-25	01-Mar-25	01-Apr-25	01-May-25
Period End		31-Mar-24	30-Apr-24	31-May-24	30-Jun-24	31-Jul-24	31-Aug-24	30-Sep-24	31-Oct-24	30-Nov-24	31-Dec-24	31-Jan-25	28-Feb-25	31-Mar-25	30-Apr-25	31-May-25
Sources																
Facility A: TE Bonds — AFL-CIO HIT	-	12,089,805	1,214,431	1,223,608	1,232,855	1,242,171	1,251,558	1,261,015	1,270,544	1,280,145	1,621,683	1,313,700	1,323,628	1,333,630	1,343,708	997,519
Facility B: Taxable — AFL-CIO HIT	-	-	-	-	-	-	-	-	-	-	-	-	-	-	-	356,343
HUD 221(d)(4) — AFL-CIO HIT	23,875,000	-	-	-	-	-	-	-	-	-	-	-	-	-	-	-
Soft 1: Deferred Developer Fee (DDF)	250,000	-	-	-	-	-	-	-	-	-	-	-	-	-	-	-
Soft 2: NV Infrastructure Bank LT Note	7,000,000	-	-	-	-	-	-	-	-	-	-	-	-	-	-	-
Equity: Investor Member	20,154,315	4,030,863	-	-	-	-	-	-	-	-	-	-	-	-	-	-
Equity: Managing Member	100	100	-	-	-	-	-	-	-	-	-	-	-	-	-	-
Equity: State Investor Member	2,760,000	2,760,000	-	-	-	-	-	-	-	-	-	-	-	-	-	-
Equity: Special Member	100	100	-	-	-	-	-	-	-	-	-	-	-	-	-	-
Cash flow from Operations	1,431,994	-	64,809	64,809	64,809	64,809	64,809	64,809	64,809	64,809	64,809	53,269	53,269	53,269	53,269	53,269
Total	**55,471,509**	**18,880,868**	**1,279,240**	**1,288,417**	**1,297,663**	**1,306,980**	**1,316,366**	**1,325,824**	**1,335,353**	**1,344,954**	**1,686,491**	**1,366,970**	**1,376,897**	**1,386,899**	**1,396,977**	**1,407,131**
Uses																
Acquisition Costs	11,080,190	11,080,190	-	-	-	-	-	-	-	-	-	-	-	-	-	-
Construction Costs	24,469,126	1,322,466	1,102,222	1,102,222	1,102,222	1,102,222	1,102,222	1,102,222	1,102,222	1,102,222	1,102,222	1,102,222	1,102,222	1,102,222	1,102,222	1,102,222
Soft Costs	3,952,430	1,616,444	77,236	77,236	77,236	77,236	77,236	77,236	77,236	77,236	406,611	77,236	77,236	77,236	77,236	77,236
Financing Costs	7,037,082	2,095,343	99,782	108,959	118,205	127,522	136,908	146,366	155,895	165,496	177,659	187,511	197,439	207,441	217,519	227,673
Working Capital Requirements	1,951,858	1,083,720	-	-	-	-	-	-	-	-	-	-	-	-	-	-
Developer Fee	6,980,824	1,682,706	-	-	-	-	-	-	-	-	-	-	-	-	-	-
Total	**55,471,509**	**18,880,868**	**1,279,240**	**1,288,417**	**1,297,663**	**1,306,980**	**1,316,366**	**1,325,824**	**1,335,353**	**1,344,954**	**1,686,491**	**1,366,970**	**1,376,897**	**1,386,899**	**1,396,977**	**1,407,131**
Surplus / (Gap)																
Balance b/f		-	-	-	-	-	-	-	-	-	-	-	-	-	-	-
Permenant Sources	55,471,509	6,791,063	64,809	64,809	64,809	64,809	64,809	64,809	64,809	64,809	64,809	53,269	53,269	53,269	53,269	53,269
Construction Loan Draws	42,693,330	12,089,805	1,214,431	1,223,608	1,232,855	1,242,171	1,251,558	1,261,015	1,270,544	1,280,145	1,621,683	1,313,700	1,323,628	1,333,630	1,343,708	1,353,862
Balance c/f		-	-	-	-	-	-	-	-	-	-	-	-	-	-	-
Flag: Gap/Surplus		*Balanced*	*Balanced*	*Balanced*	*Balanced*	*Balanced*	*Balanced*	*Balanced*	*Balanced*	*Balanced*	*Balanced*	*Balanced*	*Balanced*	*Balanced*	*Balanced*	*Balanced*
Construction Loan Need	**(42,693,330)**	**(12,089,805)**	**(1,214,431)**	**(1,223,608)**	**(1,232,855)**	**(1,242,171)**	**(1,251,558)**	**(1,261,015)**	**(1,270,544)**	**(1,280,145)**	**(1,621,683)**	**(1,313,700)**	**(1,323,628)**	**(1,333,630)**	**(1,343,708)**	**(1,353,862)**
Construction Loan																
Issuance																
Facility A: TE Bonds — AFL-CIO HIT	30,000,000	12,089,805	1,214,431	1,223,608	1,232,855	1,242,171	1,251,558	1,261,015	1,270,544	1,280,145	1,621,683	1,313,700	1,323,628	1,333,630	1,343,708	997,519
Facility B: Taxable — AFL-CIO HIT	12,693,330	-	-	-	-	-	-	-	-	-	-	-	-	-	-	356,343
Total	**42,693,330**	**12,089,805**	**1,214,431**	**1,223,608**	**1,232,855**	**1,242,171**	**1,251,558**	**1,261,015**	**1,270,544**	**1,280,145**	**1,621,683**	**1,313,700**	**1,323,628**	**1,333,630**	**1,343,708**	**1,353,862**
Repayment																
Facility A: TE Bonds — AFL-CIO HIT	(30,000,000)	-	-	-	-	-	-	-	-	-	-	-	-	-	-	-
Facility B: Taxable — AFL-CIO HIT	(12,693,330)	-	-	-	-	-	-	-	-	-	-	-	-	-	-	-
Total	**(42,693,330)**	**-**	**-**	**-**	**-**	**-**	**-**	**-**	**-**	**-**	**-**	**-**	**-**	**-**	**-**	**-**

Forecast	*Forecast*	*Forecast*	*Forecast*	*Forecast*	*Forecast*	*Forecast*	*Forecast*	*Forecast*	*Forecast*	*Forecast*	*Forecast*	*Forecast*	*Forecast*	*Forecast*	*Forecast*	*Forecast*	*Forecast*	*Forecast*	*Forecast*	*Forecast*
Mnth 15	Mnth 16	Mnth 17	Mnth 18	Mnth 19	Mnth 20	Mnth 21	Mnth 22	Mnth 23	Mnth 24	Mnth 25	Mnth 26	Mnth 27	Mnth 28	Mnth 29	Mnth 30	Mnth 31	Mnth 32	Mnth 33	Mnth 34	Mnth 35
01-Jun-25	01-Jul-25	01-Aug-25	01-Sep-25	01-Oct-25	01-Nov-25	01-Dec-25	01-Jan-26	01-Feb-26	01-Mar-26	01-Apr-26	01-May-26	01-Jun-26	01-Jul-26	01-Aug-26	01-Sep-26	01-Oct-26	01-Nov-26	01-Dec-26	01-Jan-27	01-Feb-27
30-Jun-25	31-Jul-25	31-Aug-25	30-Sep-25	31-Oct-25	30-Nov-25	31-Dec-25	31-Jan-26	28-Feb-26	31-Mar-26	30-Apr-26	31-May-26	30-Jun-26	31-Jul-26	31-Aug-26	30-Sep-26	31-Oct-26	30-Nov-26	31-Dec-26	31-Jan-27	28-Feb-27
-	-	-	-	-	-	-	-	-	(30,000,000)	-	-	-	-	-	-	-	-	-	-	-
1,364,092	1,374,400	1,384,786	1,395,251	1,405,794	1,416,417	1,814,675	1,931,200	250,372	(10,000,000)	-	-	-	-	-	-	(2,693,330)	-	-	-	-
-	-	-	-	-	-	-	-	-	23,875,000	-	-	-	-	-	-	-	-	-	-	-
-	-	-	-	-	-	-	250,000	-	-	-	-	-	-	-	-	-	-	-	-	-
-	-	-	-	-	-	-	-	-	7,000,000	-	-	-	-	-	-	-	-	-	-	-
-	-	-	-	-	-	-	-	-	12,092,589	-	-	-	-	-	-	4,030,863	-	-	-	-
-	-	-	-	-	-	-	-	-	-	-	-	-	-	-	-	-	-	-	-	-
-	-	-	-	-	-	-	-	-	-	-	-	-	-	-	-	-	-	-	-	-
-	-	-	-	-	-	-	-	-	-	-	-	-	-	-	-	-	-	-	-	-
53,269	53,269	53,269	53,269	53,269	53,269	53,269	69,828	69,828	69,828	-	-	-	-	-	-	-	-	-	-	-
1,417,362	**1,427,670**	**1,438,055**	**1,448,520**	**1,459,063**	**1,469,686**	**1,867,944**	**2,251,028**	**320,200**	**3,037,417**	**-**	**-**	**-**	**-**	**-**	**-**	**1,337,533**	**-**	**-**	**-**	**-**
-	-	-	-	-	-	-	-	-	-	-	-	-	-	-	-	-	-	-	-	-
1,102,222	1,102,222	1,102,222	1,102,222	1,102,222	1,102,222	1,102,222	-	-	-	-	-	-	-	-	-	-	-	-	-	-
77,236	77,236	77,236	77,236	77,236	77,236	461,884	-	-	-	-	-	-	-	-	-	-	-	-	-	-
237,903	248,211	258,597	269,062	279,605	290,228	303,838	318,322	320,200	20,200	20,200	20,200	20,200	20,200	20,200	20,200	-	-	-	-	-
-	-	-	-	-	-	-	-	-	666,029	-	-	-	-	-	-	202,109	-	-	-	-
-	-	-	-	-	-	-	1,932,706	-	1,682,706	-	-	-	-	-	-	1,682,706	-	-	-	-
1,417,362	**1,427,670**	**1,438,055**	**1,448,520**	**1,459,063**	**1,469,686**	**1,867,944**	**2,251,028**	**320,200**	**2,368,935**	**20,200**	**20,200**	**20,200**	**20,200**	**20,200**	**20,200**	**1,884,815**	**-**	**-**	**-**	**-**
-	-	-	-	-	-	-	-	-	-	668,482	648,282	628,082	607,882	587,682	567,482	547,282	-	-	-	-
53,269	53,269	53,269	53,269	53,269	53,269	53,269	319,828	69,828	43,037,417	-	-	-	-	-	-	4,030,863	-	-	-	-
1,364,092	1,374,400	1,384,786	1,395,251	1,405,794	1,416,417	1,814,675	1,931,200	250,372	-	-	-	-	-	-	-	-	-	-	-	-
-	**-**	**-**	**-**	**-**	**-**	**-**	**-**	**-**	**668,482**	**648,282**	**628,082**	**607,882**	**587,682**	**567,482**	**547,282**	**-**	**-**	**-**	**-**	**-**
Balanced	*Balanced*	*Balanced*	*Balanced*	*Balanced*	*Balanced*	*Balanced*	*Balanced*	*Balanced*	**Surplus**	**Surplus**	**Surplus**	**Surplus**	**Surplus**	**Surplus**	**Surplus**	*Balanced*	*Balanced*	*Balanced*	*Balanced*	*Balanced*
(1,364,092)	**(1,374,400)**	**(1,384,786)**	**(1,395,251)**	**(1,405,794)**	**(1,416,417)**	**(1,814,675)**	**(1,931,200)**	**(250,372)**	**-**	**-**	**-**	**-**	**-**	**-**	**-**	**-**	**-**	**-**	**-**	**-**
-	-	-	-	-	-	-	-	-	-	-	-	-	-	-	-	-	-	-	-	-
1,364,092	1,374,400	1,384,786	1,395,251	1,405,794	1,416,417	1,814,675	1,931,200	250,372	-	-	-	-	-	-	-	-	-	-	-	-
1,364,092	**1,374,400**	**1,384,786**	**1,395,251**	**1,405,794**	**1,416,417**	**1,814,675**	**1,931,200**	**250,372**	**-**	**-**	**-**	**-**	**-**	**-**	**-**	**-**	**-**	**-**	**-**	**-**
-	-	-	-	-	-	-	-	-	(30,000,000)	-	-	-	-	-	-	-	-	-	-	-
-	-	-	-	-	-	-	-	-	(10,000,000)	-	-	-	-	-	-	(2,693,330)	-	-	-	-
-	**-**	**-**	**-**	**-**	**-**	**-**	**-**	**-**	**(40,000,000)**	**-**	**-**	**-**	**-**	**-**	**-**	**(2,693,330)**	**-**	**-**	**-**	**-**

Residential Unit Mix
Carville Park Apts
Base Case

Unit Mix Detail

	Bedrooms	Baths	Number of Units	NRSF PU	Program	Designation	Federally Subsidized?	Program Restrictions	Net Market Rent PUPM	LIHTC Max Rent PUPM	LIHTC Achievable Rent PUPM	Projected Gross Rent PUPM	Utilities Allowance PUPM	Projected Net Rent PUPM	Market Rate Rent PUPM	LIHTC Max Rent PUPM	LIHTC Achievable Rent PUPM
Studio 1: LIHTC50% + 40% ELI	Studio	1	52	302	LIHTC	50%	Yes	40% ELI	$1,197	$866	$866	$1,197	-	$1,197	-	(38.2%)	(38.2%)
Studio 2: LIHTC50% + 40% ELI	Studio	1	52	337	LIHTC	50%	Yes	40% ELI	$1,227	$866	$866	$1,227	-	$1,227	-	(41.7%)	(41.7%)
Studio 2: LIHTC50% + 40% ELI	Studio	1	52	358	LIHTC	50%	Yes	40% ELI	$1,247	$866	$866	$1,247	-	$1,247	-	(44.0%)	(44.0%)
1-Bedroom: LIHTC50% + 40% ELI	1	1	52	488	LIHTC	50%	Yes	40% ELI	$1,477	$928	$928	$1,477	-	$1,477	-	(59.2%)	(59.2%)
2-Bedroom: Manager	2	2	1	1,289	Manager	-	No	-	-	-	-	-	-	-	-	-	-
Total			**209**											**$3,212,352**	**-**	**-**	**-**

Unit Mix Summary

Rent Level	Units	% of Units	NRSF	% of NRSF	GPR PY	GPR PUPM	GPR PUPY	% of GPR
LIHTC units, Non-subsidized	-	-	-	-	-	-	-	-
LIHTC units, Subsidized	208	99.52%	77,220	98.36%	$3,212,352	$1,287	$15,444	100.00%
Manager units	1	0.48%	1,289	1.64%	-	-	-	-
Market units	-	-	-	-	-	-	-	-
Workforce Housing units	-	-	-	-	-	-	-	-

Unit Type	Units	% of Units	NRSF	% of NRSF	GPR PY	GPR PUPM	GPR PUPY	% of GPR
SRO	-	-	-	-	-	-	-	-
Studio	156	74.64%	51,844	66.04%	$2,290,704	$1,224	$14,684	71.31%
1-bedroom	52	24.88%	25,376	32.32%	$921,648	$1,477	$17,724	28.69%
2-bedroom	1	0.48%	1,289	1.64%	-	-	-	-
3-bedroom	-	-	-	-	-	-	-	-
4-bedroom	-	-	-	-	-	-	-	-

Operating Statement
Carville Park Apts
Base Case

Integrity: OK		*Forecast*	*Forecast*	*Forecast*	*Forecast*	*Forecast*	*Forecast*	*Forecast*	*Forecast*	*Forecast*	*Forecast*	*Forecast*	*Forecast*	*Forecast*	*Forecast*	*Forecast*	*Forecast*
Signals: OK		Yr 1	Yr 2	Yr 3	Yr 4	Yr 5	Yr 6	Yr 7	Yr 8	Yr 9	Yr 10	Yr 11	Yr 12	Yr 13	Yr 14	Yr 15	Yr 16
Period Begin		15-Mar-24	01-Jan-25	01-Jan-26	01-Jan-27	01-Jan-28	01-Jan-29	01-Jan-30	01-Jan-31	01-Jan-32	01-Jan-33	01-Jan-34	01-Jan-35	01-Jan-36	01-Jan-37	01-Jan-38	01-Jan-39
Period End		31-Dec-24	31-Dec-25	31-Dec-26	31-Dec-27	31-Dec-28	31-Dec-29	31-Dec-30	31-Dec-31	31-Dec-32	31-Dec-33	31-Dec-34	31-Dec-35	31-Dec-36	31-Dec-37	31-Dec-38	31-Dec-39
Operating Income (Loss)																	
Income																	
Rental Income - LIHTC, Non-subsidized	-	-	-	-	-	-	-	-	-	-	-	-	-	-	-	-	-
Rental Income - LIHTC, Subsidized	53,377,465	-	1,475,530	3,249,163	3,314,147	3,380,430	3,448,038	3,516,999	3,587,339	3,659,086	3,732,267	3,806,913	3,883,051	3,960,712	4,039,926	4,120,725	4,203,139
Rental Income - Market	-	-	-	-	-	-	-	-	-	-	-	-	-	-	-	-	-
Rental Income - Workforce Housing	-	-	-	-	-	-	-	-	-	-	-	-	-	-	-	-	-
Commercial Income	-	-	-	-	-	-	-	-	-	-	-	-	-	-	-	-	-
Other Income	928,387	-	25,664	56,512	57,643	58,795	59,971	61,171	62,394	63,642	64,915	66,213	67,537	68,888	70,266	71,671	73,105
Gross Potential Income (GPI)	**54,305,852**	**-**	**1,501,194**	**3,305,676**	**3,371,789**	**3,439,225**	**3,508,009**	**3,578,170**	**3,649,733**	**3,722,728**	**3,797,182**	**3,873,126**	**3,950,588**	**4,029,600**	**4,110,192**	**4,192,396**	**4,276,244**
Vacancy, Non-subsidized: 7.00%	-	-	-	-	-	-	-	-	-	-	-	-	-	-	-	-	-
Vacancy, Subsidized: 5.00%	(2,668,873)	-	(73,777)	(162,458)	(165,707)	(169,021)	(172,402)	(175,850)	(179,367)	(182,954)	(186,613)	(190,346)	(194,153)	(198,036)	(201,996)	(206,036)	(210,157)
Vacancy, Market: 10.00%	-	-	-	-	-	-	-	-	-	-	-	-	-	-	-	-	-
Vacancy, Workforce Housing: 9.00%	-	-	-	-	-	-	-	-	-	-	-	-	-	-	-	-	-
Vacancy, Commercial: 10.00%	-	-	-	-	-	-	-	-	-	-	-	-	-	-	-	-	-
Vacancy, Other Income: 7.00%	(64,987)	-	(1,796)	(3,956)	(4,035)	(4,116)	(4,198)	(4,282)	(4,368)	(4,455)	(4,544)	(4,635)	(4,728)	(4,822)	(4,919)	(5,017)	(5,117)
Effective Gross Income (EGI)	**51,571,992**	**-**	**1,425,621**	**3,139,262**	**3,202,047**	**3,266,088**	**3,331,410**	**3,398,038**	**3,465,999**	**3,535,318**	**3,606,025**	**3,678,145**	**3,751,708**	**3,826,742**	**3,903,277**	**3,981,343**	**4,060,970**
Adjusted EGI During Construction (Occupied Rehab)	10,029,514	1,615,832	2,154,442	3,057,193	3,202,047												
Total Adjustments	**2,262,585**	**1,615,832**	**728,821**	**(82,068)**	**0**												
Expense																	
Payroll	6,977,907	225,684	326,200	376,092	387,374	398,996	410,965	423,294	435,993	449,073	462,545	476,422	490,714	505,436	520,599	536,217	552,303
Administrative	1,395,581	45,137	65,240	75,218	77,475	79,799	82,193	84,659	87,199	89,815	92,509	95,284	98,143	101,087	104,120	107,243	110,461
Utilities	5,369,800	-	122,353	307,114	316,327	325,817	335,592	345,659	356,029	366,710	377,711	389,043	400,714	412,735	425,117	437,871	451,007
Operations & Maintenance	3,712,146	-	57,072	213,918	220,336	226,946	233,754	240,767	247,990	255,429	263,092	270,985	279,115	287,488	296,113	304,996	314,146
Insurance	1,320,961	-	33,600	75,345	77,605	79,933	82,331	84,801	87,345	89,965	92,664	95,444	98,307	101,257	104,294	107,423	110,646
Supportive Services	657,926	6,942	21,402	36,847	37,953	39,091	40,264	41,472	42,716	43,997	45,317	46,677	48,077	49,519	51,005	52,535	54,111
Management Fee: 3.50% of EGI	2,024,911	41,893	79,263	111,420	114,762	118,205	121,751	125,404	129,166	133,041	137,032	141,143	145,378	149,739	154,231	158,858	163,624
Property & Other Taxes	-	-	-	-	-	-	-	-	-	-	-	-	-	-	-	-	-
Replacement Reserves	1,132,252	-	28,800	64,581	66,518	68,514	70,569	72,686	74,867	77,113	79,426	81,809	84,264	86,791	89,395	92,077	94,839
Solar Generation	(1,114,115)	-	-	(65,426)	(67,356)	(69,343)	(71,389)	(73,495)	(75,663)	(77,895)	(80,193)	(82,559)	(84,994)	(87,502)	(90,083)	(92,740)	(95,476)
Gross Operating Expense (OPEX)	**21,477,369**	**319,656**	**733,930**	**1,195,108**	**1,230,994**	**1,267,958**	**1,306,031**	**1,345,248**	**1,385,642**	**1,427,249**	**1,470,105**	**1,514,248**	**1,559,717**	**1,606,551**	**1,654,791**	**1,704,480**	**1,755,661**
Income Expense Ratio		-	*1.94x*	*2.63x*	*2.60x*	*2.58x*	*2.55x*	*2.53x*	*2.50x*	*2.48x*	*2.45x*	*2.43x*	*2.41x*	*2.38x*	*2.36x*	*2.34x*	*2.31x*
Net Operating Income (NOI)	**32,357,208**	**1,296,176**	**1,420,512**	**1,862,085**	**1,971,053**	**1,998,130**	**2,025,379**	**2,052,790**	**2,080,357**	**2,108,070**	**2,135,920**	**2,163,897**	**2,191,991**	**2,220,191**	**2,248,486**	**2,276,863**	**2,305,309**

Operating Statement
Carville Park Apts
Base Case

Integrity: OK		*Forecast*	*Forecast*	*Forecast*	*Forecast*	*Forecast*	*Forecast*	*Forecast*	*Forecast*	*Forecast*	*Forecast*	*Forecast*	*Forecast*	*Forecast*	*Forecast*	*Forecast*	*Forecast*
Signals: OK		Yr 1	Yr 2	Yr 3	Yr 4	Yr 5	Yr 6	Yr 7	Yr 8	Yr 9	Yr 10	Yr 11	Yr 12	Yr 13	Yr 14	Yr 15	Yr 16
Period Begin		15-Mar-24	01-Jan-25	01-Jan-26	01-Jan-27	01-Jan-28	01-Jan-29	01-Jan-30	01-Jan-31	01-Jan-32	01-Jan-33	01-Jan-34	01-Jan-35	01-Jan-36	01-Jan-37	01-Jan-38	01-Jan-39
Period End		31-Dec-24	31-Dec-25	31-Dec-26	31-Dec-27	31-Dec-28	31-Dec-29	31-Dec-30	31-Dec-31	31-Dec-32	31-Dec-33	31-Dec-34	31-Dec-35	31-Dec-36	31-Dec-37	31-Dec-38	31-Dec-39
Operating Cash Flow																	
NWC Adjustments																	
Add: Decrease (Increase) Suportive Service Reserve	-	-	-	-	-	-	-	-	-	-	-	-	-	-	-	-	-
Add: Decrease (Increase) Operating Reserve	-	-	-	-	-	-	-	-	-	-	-	-	-	-	-	-	-
Add: Decrease (Increase) Lease up Reserve	-	-	-	-	-	-	-	-	-	-	-	-	-	-	-	-	-
Add: Decrease (Increase) Debt Service Reserve	-	-	-	-	-	-	-	-	-	-	-	-	-	-	-	-	-
NWC Adjustments	**-**	**-**	**-**	**-**	**-**	**-**	**-**	**-**	**-**	**-**	**-**	**-**	**-**	**-**	**-**	**-**	**-**
Other Adjustments																	
Add: Perm loan interest expense included in developm	-	-	-	-	-	-	-	-	-	-	-	-	-	-	-	-	-
Less: Net operating income included in sources	(1,431,994)	(583,279)	(639,231)	(209,485)	-	-	-	-	-	-	-	-	-	-	-	-	-
Other Adjustments	**(1,431,994)**	**(583,279)**	**(639,231)**	**(209,485)**	**-**	**-**	**-**	**-**	**-**	**-**	**-**	**-**	**-**	**-**	**-**	**-**	**-**
Cash Flow Available for Debt Service (CFADS)	**30,925,214**	**712,897**	**781,282**	**1,652,600**	**1,971,053**	**1,998,130**	**2,025,379**	**2,052,790**	**2,080,357**	**2,108,070**	**2,135,920**	**2,163,897**	**2,191,991**	**2,220,191**	**2,248,486**	**2,276,863**	**2,305,309**
Debt Coverage Ratio		-	-	1.33x	1.17x	1.19x	1.20x	1.22x	1.24x	1.25x	1.27x	1.29x	1.30x	1.32x	1.34x	1.36x	1.37x
Hard Debt Service																	
HUD 221(d)(4) — AFL-CIO HIT	23,283,258	-	-	1,405,111	1,685,810	1,685,435	1,685,036	1,684,611	1,684,160	1,683,679	1,683,167	1,682,622	1,682,042	1,681,425	1,680,768	1,680,069	1,679,325
Hard Debt Service	**23,283,258**	**-**	**-**	**1,405,111**	**1,685,810**	**1,685,435**	**1,685,036**	**1,684,611**	**1,684,160**	**1,683,679**	**1,683,167**	**1,682,622**	**1,682,042**	**1,681,425**	**1,680,768**	**1,680,069**	**1,679,325**
Distributable Operating Cash Flow	**7,641,955**	**712,897**	**781,282**	**247,489**	**285,243**	**312,695**	**340,343**	**368,179**	**396,197**	**424,391**	**452,753**	**481,275**	**509,949**	**538,767**	**567,718**	**596,794**	**625,984**

Net Working Capital (NWC)
Carville Park Apts
Base Case

Integrity: OK		*Forecast*	*Forecast*	*Forecast*	*Forecast*	*Forecast*	*Forecast*	*Forecast*	*Forecast*	*Forecast*	*Forecast*	*Forecast*	*Forecast*	*Forecast*	*Forecast*	*Forecast*	*Forecast*
Signals: OK		Yr 1	Yr 2	Yr 3	Yr 4	Yr 5	Yr 6	Yr 7	Yr 8	Yr 9	Yr 10	Yr 11	Yr 12	Yr 13	Yr 14	Yr 15	Yr 16
Period Begin		15-Mar-24	01-Jan-25	01-Jan-26	01-Jan-27	01-Jan-28	01-Jan-29	01-Jan-30	01-Jan-31	01-Jan-32	01-Jan-33	01-Jan-34	01-Jan-35	01-Jan-36	01-Jan-37	01-Jan-38	01-Jan-39
Period End		31-Dec-24	31-Dec-25	31-Dec-26	31-Dec-27	31-Dec-28	31-Dec-29	31-Dec-30	31-Dec-31	31-Dec-32	31-Dec-33	31-Dec-34	31-Dec-35	31-Dec-36	31-Dec-37	31-Dec-38	31-Dec-39
Stabilized Period																	
Perm: Operating Cash																	
Balance b/f		-	712,897	1,501,308	2,327,721	356,220	356,220	356,220	356,220	356,219	356,219	356,220	356,220	356,220	356,220	356,220	356,220
Add: Initial funding	558,329	-	-	558,329	-	-	-	-	-	-	-	-	-	-	-	-	-
Add: Deposits from operations	7,641,955	712,897	781,282	247,489	285,243	312,695	340,343	368,179	396,197	424,391	452,753	481,275	509,949	538,767	567,718	596,794	625,984
Add: Interest income	93,749	-	7,129	20,596	23,277	3,562	3,562	3,562	3,562	3,562	3,562	3,562	3,562	3,562	3,562	3,562	3,562
Less: Withdrawals to fund operations	-	-	-	-	-	-	-	-	-	-	-	-	-	-	-	-	-
Less: Waterfall distributions	(6,525,277)	-	-	-	(1,770,645)	(254,618)	(275,835)	(297,209)	(318,732)	(340,401)	(362,212)	(384,158)	(406,234)	(428,434)	(450,750)	(473,177)	(762,872)
Less: Partner distributions	(1,768,756)	-	-	-	(509,377)	(61,640)	(68,069)	(74,533)	(81,028)	(87,552)	(94,103)	(100,679)	(107,277)	(113,895)	(120,530)	(127,179)	(222,894)
Balance c/f		**712,897**	**1,501,308**	**2,327,721**	**356,220**	**356,220**	**356,220**	**356,220**	**356,219**	**356,219**	**356,220**	**356,220**	**356,220**	**356,220**	**356,220**	**356,220**	**-**
Flag: Sufficient / Deficit		*Sufficient*	*Sufficient*	*Sufficient*	*Sufficient*	*Sufficient*	*Sufficient*	*Sufficient*	*Sufficient*	*Sufficient*	*Sufficient*	*Sufficient*	*Sufficient*	*Sufficient*	*Sufficient*	*Sufficient*	*n/a*
Perm: Operating Reserve: $581,749 calc.																	
Balance b/f		-	-	-	555,903	561,462	567,076	572,747	578,475	584,259	590,102	596,003	601,963	607,983	614,062	620,203	626,405
Add: Initial funding	550,399	-	-	550,399	-	-	-	-	-	-	-	-	-	-	-	-	-
Add: Deposits from operations																	
Add: Interest income	82,270	-	-	5,504	5,559	5,615	5,671	5,727	5,785	5,843	5,901	5,960	6,020	6,080	6,141	6,202	6,264
Less: Withdrawals for operations	-	-	-	-	-	-	-	-	-	-	-	-	-	-	-	-	-
Less: Release	(632,669)	-	-	-	-	-	-	-	-	-	-	-	-	-	-	-	(632,669)
Balance c/f		**-**	**-**	**555,903**	**561,462**	**567,076**	**572,747**	**578,475**	**584,259**	**590,102**	**596,003**	**601,963**	**607,983**	**614,062**	**620,203**	**626,405**	**-**
Perm: Debt Service Reserve: $843,131 calc.																	
Balance b/f		-	-	-	851,562	860,078	868,678	877,365	886,139	895,000	903,950	912,990	922,120	931,341	940,654	950,061	959,561
Add: Initial funding	843,131	-	-	843,131	-	-	-	-	-	-	-	-	-	-	-	-	-
Add: Deposits from operations																	
Add: Interest income	126,026	-	-	8,431	8,516	8,601	8,687	8,774	8,861	8,950	9,040	9,130	9,221	9,313	9,407	9,501	9,596
Less: Withdrawals for operations	-	-	-	-	-	-	-	-	-	-	-	-	-	-	-	-	-
Less: Release	(969,157)	-	-	-	-	-	-	-	-	-	-	-	-	-	-	-	(969,157)
Balance c/f		**-**	**-**	**851,562**	**860,078**	**868,678**	**877,365**	**886,139**	**895,000**	**903,950**	**912,990**	**922,120**	**931,341**	**940,654**	**950,061**	**959,561**	**-**
Perm: Replacement Reserve																	
Balance b/f		-	-	28,800	93,669	161,124	183,290	255,692	330,935	352,961	433,604	517,367	538,902	628,555	721,632	818,243	918,503
Add: Initial funding	1,132,252	-	-	-	-	-	-	-	-	-	-	-	-	-	-	-	-
Add: Deposits from operations	59,833	-	28,800	64,581	66,518	68,514	70,569	72,686	74,867	77,113	79,426	81,809	84,264	86,791	89,395	92,077	94,839
Add: Interest income	59,833	-	-	288	937	1,611	1,833	2,557	3,309	3,530	4,336	5,174	5,389	6,286	7,216	8,182	9,185
Less: Withdrawals for operations	(169,558)	-	-	-	-	(47,960)	-	-	(56,150)	-	-	(65,447)	-	-	-	-	-
Less: Release	(1,022,527)	-	-	-	-	-	-	-	-	-	-	-	-	-	-	-	(1,022,527)
Balance c/f		**-**	**28,800**	**93,669**	**161,124**	**183,290**	**255,692**	**330,935**	**352,961**	**433,604**	**517,367**	**538,902**	**628,555**	**721,632**	**818,243**	**918,503**	**-**

Net Working Capital (NWC)
Carville Park Apts
Base Case

Integrity: OK		*Forecast*	*Forecast*	*Forecast*	*Forecast*	*Forecast*	*Forecast*	*Forecast*	*Forecast*	*Forecast*	*Forecast*	*Forecast*	*Forecast*	*Forecast*	*Forecast*	*Forecast*	*Forecast*
Signals: OK		Yr 1	Yr 2	Yr 3	Yr 4	Yr 5	Yr 6	Yr 7	Yr 8	Yr 9	Yr 10	Yr 11	Yr 12	Yr 13	Yr 14	Yr 15	Yr 16
Period Begin		15-Mar-24	01-Jan-25	01-Jan-26	01-Jan-27	01-Jan-28	01-Jan-29	01-Jan-30	01-Jan-31	01-Jan-32	01-Jan-33	01-Jan-34	01-Jan-35	01-Jan-36	01-Jan-37	01-Jan-38	01-Jan-39
Period End		31-Dec-24	31-Dec-25	31-Dec-26	31-Dec-27	31-Dec-28	31-Dec-29	31-Dec-30	31-Dec-31	31-Dec-32	31-Dec-33	31-Dec-34	31-Dec-35	31-Dec-36	31-Dec-37	31-Dec-38	31-Dec-39
Construction Period																	
Constr: Operating Cash																	
Balance b/f		-	359,782	363,380	-	-	-	-	-	-	-	-	-	-	-	-	-
Add: Initial funding	-	356,220	-	(356,220)	-	-	-	-	-	-	-	-	-	-	-	-	-
Add: Deposits from operations																	
Add: Interest income	7,232	3,562	3,598	72	-	-	-	-	-	-	-	-	-	-	-	-	-
Less: Withdrawals for operations	-	-	-	-	-	-	-	-	-	-	-	-	-	-	-	-	-
Less: Release	(7,232)	-	-	(7,232)	-	-	-	-	-	-	-	-	-	-	-	-	-
Balance c/f		**359,782**	**363,380**	**-**	**-**	**-**	**-**	**-**	**-**	**-**	**-**	**-**	**-**	**-**	**-**	**-**	**-**
Constr: Working Capital: HUD 221(d)(4)																	
Balance b/f		-	477,500	477,500	-	-	-	-	-	-	-	-	-	-	-	-	-
Add: Initial funding	477,500	477,500	-	-	-	-	-	-	-	-	-	-	-	-	-	-	-
Add: Deposits from operations																	
Add: Interest income	-	-	-	-	-	-	-	-	-	-	-	-	-	-	-	-	-
Less: Withdrawals for operations	-																
Less: Release	(477,500)	-	-	(477,500)	-	-	-	-	-	-	-	-	-	-	-	-	-
Balance c/f		**477,500**	**477,500**	**-**	**-**	**-**	**-**	**-**	**-**	**-**	**-**	**-**	**-**	**-**	**-**	**-**	**-**
Constr: Lease-up Reserve																	
Balance b/f		-	250,000	250,000	-	-	-	-	-	-	-	-	-	-	-	-	-
Add: Initial funding	250,000	250,000	-	-	-	-	-	-	-	-	-	-	-	-	-	-	-
Add: Deposits from operations																	
Add: Interest income	-	-	-	-	-	-	-	-	-	-	-	-	-	-	-	-	-
Less: Withdrawals for operations	-																
Less: Release	(250,000)	-	-	(250,000)	-	-	-	-	-	-	-	-	-	-	-	-	-
Balance c/f		**250,000**	**250,000**	**-**	**-**	**-**	**-**	**-**	**-**	**-**	**-**	**-**	**-**	**-**	**-**	**-**	**-**

Net Working Capital (NWC)
Carville Park Apts
Base Case

Integrity: OK		*Forecast*	*Forecast*	*Forecast*	*Forecast*	*Forecast*	*Forecast*	*Forecast*	*Forecast*	*Forecast*	*Forecast*	*Forecast*	*Forecast*	*Forecast*	*Forecast*	*Forecast*	*Forecast*
Signals: OK		Yr 1	Yr 2	Yr 3	Yr 4	Yr 5	Yr 6	Yr 7	Yr 8	Yr 9	Yr 10	Yr 11	Yr 12	Yr 13	Yr 14	Yr 15	Yr 16
Period Begin		15-Mar-24	01-Jan-25	01-Jan-26	01-Jan-27	01-Jan-28	01-Jan-29	01-Jan-30	01-Jan-31	01-Jan-32	01-Jan-33	01-Jan-34	01-Jan-35	01-Jan-36	01-Jan-37	01-Jan-38	01-Jan-39
Period End		31-Dec-24	31-Dec-25	31-Dec-26	31-Dec-27	31-Dec-28	31-Dec-29	31-Dec-30	31-Dec-31	31-Dec-32	31-Dec-33	31-Dec-34	31-Dec-35	31-Dec-36	31-Dec-37	31-Dec-38	31-Dec-39
Summary																	
Reserves																	
Balance b/f		-	837,282	869,680	1,501,134	1,582,663	1,619,044	1,705,804	1,795,549	1,832,221	1,927,656	2,026,359	2,062,985	2,167,878	2,276,348	2,388,507	2,504,469
Add: Initial funding	1,871,029	833,720	-	1,037,310	-	-	-	-	-	-	-	-	-	-	-	-	-
Add: Deposits from operations	1,132,252	-	28,800	64,581	66,518	68,514	70,569	72,686	74,867	77,113	79,426	81,809	84,264	86,791	89,395	92,077	94,839
Add: Interest income	275,361	3,562	3,598	14,295	15,011	15,827	16,190	17,058	17,955	18,322	19,277	20,264	20,630	21,679	22,763	23,885	25,045
Less: Withdrawals for operations	(169,558)	-	-	-	-	(47,960)	-	-	(56,150)	-	-	(65,447)	-	-	-	-	-
Less: Release	(3,109,085)	-	-	(484,732)	-	-	-	-	-	-	-	-	-	-	-	-	(2,624,353)
Balance c/f		**837,282**	**869,680**	**1,501,134**	**1,582,663**	**1,619,044**	**1,705,804**	**1,795,549**	**1,832,221**	**1,927,656**	**2,026,359**	**2,062,985**	**2,167,878**	**2,276,348**	**2,388,507**	**2,504,469**	**-**
Increase (Decrease): Reserves	-	*837,282*	*32,398*	*631,454*	*81,530*	*36,381*	*86,760*	*89,745*	*36,672*	*95,435*	*98,703*	*36,625*	*104,893*	*108,470*	*112,159*	*115,962*	*(2,504,469)*
Total: Interest Earned on Reserves	**369,110**	**3,562**	**10,727**	**34,891**	**38,289**	**19,389**	**19,753**	**20,620**	**21,518**	**21,884**	**22,839**	**23,826**	**24,192**	**25,241**	**26,326**	**27,447**	**28,607**
Cash & Reserves																	
Balance b/f		-	1,800,179	2,620,987	3,828,855	1,938,883	1,975,264	2,062,024	2,151,768	2,188,440	2,283,876	2,382,579	2,419,205	2,524,098	2,632,569	2,744,727	2,860,689
Perm: Operating Cash	-	712,897	788,411	826,414	(1,971,501)	(0)	1	(1)	(0)	0	0	0	0	0	(0)	(0)	(356,220)
Perm: Operating Reserve: $581,749 calc.	-	-	-	555,903	5,559	5,615	5,671	5,727	5,785	5,843	5,901	5,960	6,020	6,080	6,141	6,202	(626,405)
Perm: Debt Service Reserve: $843,131 calc.	-	-	-	851,562	8,516	8,601	8,687	8,774	8,861	8,950	9,040	9,130	9,221	9,313	9,407	9,501	(959,561)
Perm: Replacement Reserve	-	-	28,800	64,869	67,455	22,165	72,402	75,243	22,026	80,643	83,763	21,536	89,653	93,077	96,612	100,259	(918,503)
Constr: Operating Cash	-	359,782	3,598	(363,380)	-	-	-	-	-	-	-	-	-	-	-	-	-
Constr: Working Capital: HUD 221(d)(4)	-	477,500	-	(477,500)	-	-	-	-	-	-	-	-	-	-	-	-	-
Constr: Lease-up Reserve	-	250,000	-	(250,000)	-	-	-	-	-	-	-	-	-	-	-	-	-
[Spare 1]	-	-	-	-	-	-	-	-	-	-	-	-	-	-	-	-	-
Balance c/f		**1,800,179**	**2,620,987**	**3,828,855**	**1,938,883**	**1,975,264**	**2,062,024**	**2,151,768**	**2,188,440**	**2,283,876**	**2,382,579**	**2,419,205**	**2,524,098**	**2,632,569**	**2,744,727**	**2,860,689**	**0**
Increase (Decrease): Cash & Reserves		*1,800,179*	*820,809*	*1,207,868*	*(1,889,972)*	*36,381*	*86,760*	*89,744*	*36,672*	*95,435*	*98,703*	*36,626*	*104,894*	*108,470*	*112,158*	*115,962*	*(2,860,689)*
Book Value																	
Balance b/f		-	1,800,179	2,620,987	3,828,855	1,938,883	1,975,264	2,062,024	2,151,768	2,188,440	2,283,876	2,382,579	2,419,205	2,524,098	2,632,569	2,744,727	2,860,689
Perm: Operating Cash	-	712,897	788,411	826,414	(1,971,501)	(0)	1	(1)	(0)	0	0	0	0	0	(0)	(0)	(356,220)
Perm: Operating Reserve: $581,749 calc.	-	-	-	555,903	5,559	5,615	5,671	5,727	5,785	5,843	5,901	5,960	6,020	6,080	6,141	6,202	(626,405)
Perm: Debt Service Reserve: $843,131 calc.	-	-	-	851,562	8,516	8,601	8,687	8,774	8,861	8,950	9,040	9,130	9,221	9,313	9,407	9,501	(959,561)
Perm: Replacement Reserve	-	-	28,800	64,869	67,455	22,165	72,402	75,243	22,026	80,643	83,763	21,536	89,653	93,077	96,612	100,259	(918,503)
Constr: Operating Cash	-	359,782	3,598	(363,380)	-	-	-	-	-	-	-	-	-	-	-	-	-
Constr: Working Capital: HUD 221(d)(4)	-	477,500	-	(477,500)	-	-	-	-	-	-	-	-	-	-	-	-	-
Constr: Lease-up Reserve	-	250,000	-	(250,000)	-	-	-	-	-	-	-	-	-	-	-	-	-
[Spare 1]	-	-	-	-	-	-	-	-	-	-	-	-	-	-	-	-	-
Balance c/f		**1,800,179**	**2,620,987**	**3,828,855**	**1,938,883**	**1,975,264**	**2,062,024**	**2,151,768**	**2,188,440**	**2,283,876**	**2,382,579**	**2,419,205**	**2,524,098**	**2,632,569**	**2,744,727**	**2,860,689**	**0**
Increase (Decrease): Book Value	*0*	*1,800,179*	*820,809*	*1,207,868*	*(1,889,972)*	*36,381*	*86,760*	*89,744*	*36,672*	*95,435*	*98,703*	*36,626*	*104,894*	*108,470*	*112,158*	*115,962*	*(2,860,689)*

Seller Ground Lease
Carville Park Apts
Base Case

Ground Lease

Lease Terms

Lease start (date)	15-Mar-24
Lease term (years)	99 Yrs
Lease maturity (date)	14-Mar-23
Base rent (annual)	15,000
Base rent escalations (annual)	2.00%

Lease Value (FMK)

FMV: Land	4.05 PLSF	800,000
FMV: Improvements		11,000,000
FMV: Fee Simple		11,800,000
FMV: Projected Value Inflation		1.50%

Lessor Economics

Lessor Profit

Ground Rent	4,595,762
Add: Terminal Value @ Maturity	51,525,260
Gross Profit	**56,121,022**
Less: Land Value @ Closing	(800,000)
Net Profit	**55,321,022**

Lessor Returns

IRR	5.13%
Multiple	70.2x
NPV: 5.0% rate	81,509

Year	Date	Accrued Ground Rent	Ground Rent Paid	Payable Balance c/f	Land Value @ Closing	Terminal Value @ Maturity	Net Economic Benefit	Present Value Factor	Net Present Value
Closing	15-Mar-24				(800,000)		(800,000)	1.00x	(800,000)
Yr 0	31-Dec-24	11,917	-	11,917		-	-	0.96x	-
Yr 1	31-Dec-25	15,300	-	27,217		-	-	0.92x	-
Yr 2	31-Dec-26	15,606	-	42,823		-	-	0.87x	-
Yr 3	31-Dec-27	15,918	58,741	58,741		-	58,741	0.83x	48,813
Yr 4	31-Dec-28	16,236	16,236	16,236		-	16,236	0.79x	12,850
Yr 5	31-Dec-29	16,561	16,561	16,561		-	16,561	0.75x	12,483
Yr 6	31-Dec-30	16,892	16,892	16,892		-	16,892	0.72x	12,126
Yr 7	31-Dec-31	17,230	17,230	17,230		-	17,230	0.68x	11,780
Yr 8	31-Dec-32	17,575	17,575	17,575		-	17,575	0.65x	11,443
Yr 9	31-Dec-33	17,926	17,926	17,926		-	17,926	0.62x	11,116
Yr 10	31-Dec-34	18,285	18,285	18,285		-	18,285	0.59x	10,799
Yr 11	31-Dec-35	18,651	18,651	18,651		-	18,651	0.56x	10,490
Yr 12	31-Dec-36	19,024	19,024	19,024		-	19,024	0.54x	10,190
Yr 13	31-Dec-37	19,404	19,404	19,404		-	19,404	0.51x	9,899
Yr 14	31-Dec-38	19,792	19,792	19,792		-	19,792	0.49x	9,616
Yr 15	31-Dec-39	20,188	20,188	20,188		-	20,188	0.46x	9,342
Yr 16	31-Dec-40	20,592	20,592	-		-	20,592	0.44x	9,075
Yr 17	31-Dec-41	21,004	21,004	-		-	21,004	0.42x	8,815
Yr 18	31-Dec-42	21,424	21,424	-		-	21,424	0.40x	8,564
Yr 19	31-Dec-43	21,852	21,852	-		-	21,852	0.38x	8,319
Yr 20	31-Dec-44	22,289	22,289	-		-	22,289	0.36x	8,081
Yr 21	31-Dec-45	22,735	22,735	-		-	22,735	0.35x	7,850
Yr 22	31-Dec-46	23,190	23,190	-		-	23,190	0.33x	7,626
Yr 23	31-Dec-47	23,653	23,653	-		-	23,653	0.31x	7,408
Yr 24	31-Dec-48	24,127	24,127	-		-	24,127	0.30x	7,196
Yr 25	31-Dec-49	24,609	24,609	-		-	24,609	0.28x	6,991
Yr 26	31-Dec-50	25,101	25,101	-		-	25,101	0.27x	6,791
Yr 27	31-Dec-51	25,603	25,603	-		-	25,603	0.26x	6,597
Yr 28	31-Dec-52	26,115	26,115	-		-	26,115	0.25x	6,409
Yr 29	31-Dec-53	26,638	26,638	-		-	26,638	0.23x	6,225
Yr 30	31-Dec-54	27,170	27,170	-		-	27,170	0.22x	6,048
Yr 31	31-Dec-55	27,714	27,714	-		-	27,714	0.21x	5,875
Yr 32	31-Dec-56	28,268	28,268	-		-	28,268	0.20x	5,707
Yr 33	31-Dec-57	28,833	28,833	-		-	28,833	0.19x	5,544
Yr 34	31-Dec-58	29,410	29,410	-		-	29,410	0.18x	5,386
Yr 35	31-Dec-59	29,998	29,998	-		-	29,998	0.17x	5,232
Yr 36	31-Dec-60	30,598	30,598	-		-	30,598	0.17x	5,082
Yr 37	31-Dec-61	31,210	31,210	-		-	31,210	0.16x	4,937
Yr 38	31-Dec-62	31,834	31,834	-		-	31,834	0.15x	4,796
Yr 39	31-Dec-63	32,471	32,471	-		-	32,471	0.14x	4,659
Yr 40 - Yr 90		2,890,467	2,890,467	-		-	2,890,467	0.04x	122,285
Yr 91	31-Dec-15	90,930	90,930	-	-	-	90,930	0.01x	1,032
Yr 92	31-Dec-16	92,749	92,749	-	-	-	92,749	0.01x	1,002
Yr 93	31-Dec-17	94,604	94,604	-	-	-	94,604	0.01x	974
Yr 94	31-Dec-18	96,496	96,496	-	-	-	96,496	0.01x	946
Yr 95	31-Dec-19	98,425	98,425	-	-	-	98,425	0.01x	919
Yr 96	31-Dec-20	100,394	100,394	-	-	-	100,394	0.01x	893
Yr 97	31-Dec-21	102,402	102,402	-	-	-	102,402	0.01x	867
Yr 98	31-Dec-22	104,450	104,450	-	-	-	104,450	0.01x	842
Yr 99	31-Dec-23	21,900	21,900	-	-	51,525,260	51,547,159	0.01x	411,589
Yr 100	31-Dec-24	-	-	-	-	-	-	0.01x	-
		4,595,762	**4,595,762**		**(800,000)**	**51,525,260**	**55,321,022**		**81,509**

Senior Securred Mortgage // HUD 221(d)(4) — AFL-CIO HIT
Carville Park Apts
Base Case

Terms

Mortgage Principal

Mortgage Principal	23,875,000
Mortgage Principal PU	114,234

UW Coverage (Untrended)

CFADS	1,940,198
DSCR	1.16x

Key Dates

	Month	Date
First payment date (original)	Mnth 1	1-Mar-26
First payment date (partnership)	Mnth 1	1-Mar-26
Interest only period end	-	-
Loan maturity date	Mnth 480	1-Feb-66
Forecast repayment date	Mnth 167	12/31/39

Debt Service

Interest

Annual interest rate	6.25%
Initial interest only period	No
Interest partially capitalized during construction	Yes

Mortgage Insurance

Annual mortgage insurance premium	0.25%
Mortgage insurance premium calc. basis	Outstanding Bal.

Amortization

Amortizing principal balance	Yes
Amortization period	480 Mnths
Annual fixed debt service	1,626,574

Payment(s)	Fiscal Year	Month	Year Ending	Balance b/f	Debt Service	Interest Payment		Amortization	Balance c/f	MIP
						Expensed	Capitalized			
1 - 10	2026	3	01-Mar-26	23,875,000	1,355,478	1,240,828	-	114,650	23,760,350	49,633
11 - 22	2027	12	31-Dec-27	23,760,350	1,626,574	1,480,896	-	145,678	23,614,672	59,236
23 - 34	2028	12	31-Dec-28	23,614,672	1,626,574	1,471,525	-	155,048	23,459,623	58,861
35 - 46	2029	12	31-Dec-29	23,459,623	1,626,574	1,461,552	-	165,021	23,294,602	58,462
47 - 58	2030	12	31-Dec-30	23,294,602	1,626,574	1,450,938	-	175,636	23,118,966	58,038
59 - 70	2031	12	31-Dec-31	23,118,966	1,626,574	1,439,641	-	186,933	22,932,033	57,586
71 - 82	2032	12	31-Dec-32	22,932,033	1,626,574	1,427,617	-	198,957	22,733,076	57,105
83 - 94	2033	12	31-Dec-33	22,733,076	1,626,574	1,414,820	-	211,754	22,521,322	56,593
95 - 106	2034	12	31-Dec-34	22,521,322	1,626,574	1,401,199	-	225,375	22,295,947	56,048
107 - 118	2035	12	31-Dec-35	22,295,947	1,626,574	1,386,703	-	239,871	22,056,076	55,468
119 - 130	2036	12	31-Dec-36	22,056,076	1,626,574	1,371,274	-	255,300	21,800,776	54,851
131 - 142	2037	12	31-Dec-37	21,800,776	1,626,574	1,354,852	-	271,721	21,529,054	54,194
143 - 154	2038	12	31-Dec-38	21,529,054	1,626,574	1,337,375	-	289,199	21,239,855	53,495
155 - 166	2039	12	31-Dec-39	21,239,855	1,626,574	1,318,773	-	307,801	20,932,054	52,751
167 - 178	2040	12	31-Dec-40	20,932,054	1,626,574	1,298,975	-	327,599	20,604,455	51,959
179 - 190	2041	12	31-Dec-41	20,604,455	1,626,574	1,277,903	-	348,671	20,255,784	51,116
191 - 202	2042	12	31-Dec-42	20,255,784	1,626,574	1,255,476	-	371,098	19,884,686	50,219
203 - 214	2043	12	31-Dec-43	19,884,686	1,626,574	1,231,606	-	394,968	19,489,718	49,264
215 - 226	2044	12	31-Dec-44	19,489,718	1,626,574	1,206,201	-	420,373	19,069,345	48,248
227 - 238	2045	12	31-Dec-45	19,069,345	1,626,574	1,179,162	-	447,412	18,621,933	47,166
239 - 250	2046	12	31-Dec-46	18,621,933	1,626,574	1,150,383	-	476,190	18,145,743	46,015
251 - 262	2047	12	31-Dec-47	18,145,743	1,626,574	1,119,754	-	506,820	17,638,923	44,790
263 - 274	2048	12	31-Dec-48	17,638,923	1,626,574	1,087,154	-	539,419	17,099,504	43,486
275 - 286	2049	12	31-Dec-49	17,099,504	1,626,574	1,052,458	-	574,116	16,525,388	42,098
287 - 298	2050	12	31-Dec-50	16,525,388	1,626,574	1,015,530	-	611,044	15,914,344	40,621
299 - 310	2051	12	31-Dec-51	15,914,344	1,626,574	976,226	-	650,347	15,263,996	39,049
311 - 322	2052	12	31-Dec-52	15,263,996	1,626,574	934,395	-	692,179	14,571,817	37,376
323 - 334	2053	12	31-Dec-53	14,571,817	1,626,574	889,873	-	736,701	13,835,116	35,595
335 - 346	2054	12	31-Dec-54	13,835,116	1,626,574	842,487	-	784,087	13,051,029	33,699
347 - 358	2055	12	31-Dec-55	13,051,029	1,626,574	792,053	-	834,521	12,216,508	31,682
359 - 370	2056	12	31-Dec-56	12,216,508	1,626,574	738,375	-	888,199	11,328,309	29,535
371 - 382	2057	12	31-Dec-57	11,328,309	1,626,574	681,244	-	945,330	10,382,979	27,250
383 - 394	2058	12	31-Dec-58	10,382,979	1,626,574	620,439	-	1,006,135	9,376,845	24,818
395 - 406	2059	12	31-Dec-59	9,376,845	1,626,574	555,723	-	1,070,851	8,305,993	22,229
407 - 418	2060	12	31-Dec-60	8,305,993	1,626,574	486,844	-	1,139,730	7,166,263	19,474
419 - 430	2061	12	31-Dec-61	7,166,263	1,626,574	413,534	-	1,213,040	5,953,223	16,541
431 - 442	2062	12	31-Dec-62	5,953,223	1,626,574	335,509	-	1,291,065	4,662,158	13,420
443 - 454	2063	12	31-Dec-63	4,662,158	1,626,574	252,465	-	1,374,108	3,288,050	10,099
455 - 466	2064	12	31-Dec-64	3,288,050	1,626,574	164,080	-	1,462,494	1,825,556	6,563
467 - 478	2065	12	31-Dec-65	1,825,556	1,626,574	70,010	-	1,556,564	268,992	2,800
479 - 480	2066	12	31-Dec-66	268,992	270,393	2,103	-	268,290	702	84
0 - 0	2067	12	31-Dec-67	702	-	-	-	-	702	-
0 - 0	2068	12	31-Dec-68	702	-	-	-	-	702	-
0 - 0	2069	12	31-Dec-69	702	-	-	-	-	702	-
0 - 0	2070	12	31-Dec-70	702	-	-	-	-	702	-
0 - 0	2071	12	31-Dec-71	702	-	-	-	-	702	-
0 - 0	2072	12	31-Dec-72	702	-	-	-	-	702	-
					65,062,253	**41,187,955**	**-**	**23,874,298**		**1,647,518**

Soft 2: NV Infrastructure Bank LT Note
Carville Park Apts
Base Case

Terms

Key Dates

Date funds are first advanced			01-Mar-26
Note term			240 Mnths
Note maturity			31-Dec-46
Projected repayment	Yr 14	2039	31-Dec-39

Interest

Interest rate accrued on outstanding principal	6.25%
Interest calculation methedology	Simple
Projected lender annual rate of return	4.43%
Carryforeward accrued, unpaid interest in period	No
Deduct accrued interest in calculation of taxable income?	Yes
Capitalize deductable interest during construction?	
Outstanding principal + unpaid interest included in minimum g	No

Repayment

Principal & Interest

Amount of initial advance	7,000,000
Gross accrued interest over life of the note	3,876,172

Repayment: Operations

Priority position in operating cash flow waterfall	6
Percent of operating cash flow available for debt service	75%
Repay outstanding principal balance using available cash flow	Yes
Cash flow distributions from operations	5,306,269

Repayment: Sale and/or Refi

Sale and/or refinancing date	31-Dec-39
Cash flow distributions at sale and/or refinancing	5,569,903
Check note repayment 1	Ok

Note Balance

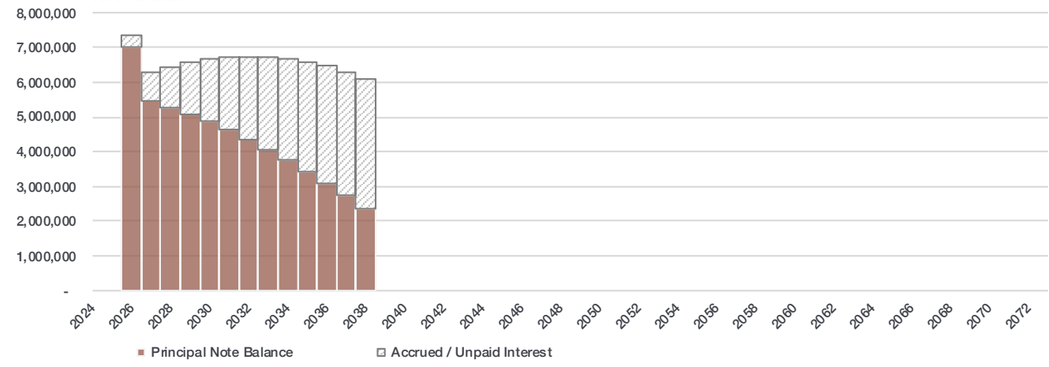

Fiscal Year	Payment Number	Partial Period Factor	Available Cash Flow		Interest Expense				Outstanding Note Balance				Interest Payable / (Prepaid) Balance				Ending Bal. + Unpaid Interest	Net Lender Cash Flow		
			Operations	Financing	Interest rate	Accrued	Paid	Deductible	Balance b/f	Funding	Repayment	Balance c/f	Balance b/f	Accrued	Paid	Balance c/f		Contributions	Distributions	Net
2024	0	-	-	-	-	-	-	-	-	-	-	-	-	-	-	-	-	-	-	-
2025	1	-	-	-	-	-	-	-	-	-	-	-	-	-	-	-	-	-	-	-
2026	2	83.56%	-	-	5.22%	365,582	-	365,582	-	7,000,000	-	7,000,000	-	365,582	-	365,582	7,365,582	(7,000,000)	-	(7,000,000)
2027	3	100.00%	1,528,131	-	6.25%	437,500	(437,500)	437,500	7,000,000	-	(1,528,131)	5,471,869	365,582	437,500	-	803,082	6,274,951	-	1,528,131	1,528,131
2028	4	100.00%	184,920	-	6.25%	341,992	(184,920)	341,992	5,471,869	-	(184,920)	5,286,949	803,082	341,992	-	1,145,074	6,432,023	-	184,920	184,920
2029	5	100.00%	204,208	-	6.25%	330,434	(204,208)	330,434	5,286,949	-	(204,208)	5,082,741	1,145,074	330,434	-	1,475,508	6,558,249	-	204,208	204,208
2030	6	100.00%	223,599	-	6.25%	317,671	(223,599)	317,671	5,082,741	-	(223,599)	4,859,142	1,475,508	317,671	-	1,793,180	6,652,321	-	223,599	223,599
2031	7	100.00%	243,083	-	6.25%	303,696	(243,083)	303,696	4,859,142	-	(243,083)	4,616,059	1,793,180	303,696	-	2,096,876	6,712,935	-	243,083	243,083
2032	8	100.00%	262,655	-	6.25%	288,504	(262,655)	288,504	4,616,059	-	(262,655)	4,353,404	2,096,876	288,504	-	2,385,380	6,738,784	-	262,655	262,655
2033	9	100.00%	282,309	-	6.25%	272,088	(272,088)	272,088	4,353,404	-	(282,309)	4,071,096	2,385,380	272,088	-	2,657,467	6,728,563	-	282,309	282,309
2034	10	100.00%	302,037	-	6.25%	254,443	(254,443)	254,443	4,071,096	-	(302,037)	3,769,058	2,657,467	254,443	-	2,911,911	6,680,969	-	302,037	302,037
2035	11	100.00%	321,832	-	6.25%	235,566	(235,566)	235,566	3,769,058	-	(321,832)	3,447,226	2,911,911	235,566	-	3,147,477	6,594,703	-	321,832	321,832
2036	12	100.00%	341,686	-	6.25%	215,452	(215,452)	215,452	3,447,226	-	(341,686)	3,105,539	3,147,477	215,452	-	3,362,929	6,468,468	-	341,686	341,686
2037	13	100.00%	361,591	-	6.25%	194,096	(194,096)	194,096	3,105,539	-	(361,591)	2,743,948	3,362,929	194,096	-	3,557,025	6,300,973	-	361,591	361,591
2038	14	100.00%	381,537	-	6.25%	171,497	(171,497)	171,497	2,743,948	-	(381,537)	2,362,411	3,557,025	171,497	-	3,728,522	6,090,933	-	381,537	381,537
2039	15	100.00%	668,681	5,569,903	6.25%	147,651	(147,651)	147,651	2,362,411	-	(2,362,411)	-	3,728,522	147,651	(3,876,172)	-	-	-	6,238,584	6,238,584
2040	16	100.00%	-	-	-	-	-	-	-	-	-	-	-	-	-	-	-	-	-	-
2041	17	100.00%	-	-	-	-	-	-	-	-	-	-	-	-	-	-	-	-	-	-
2042	18	100.00%	-	-	-	-	-	-	-	-	-	-	-	-	-	-	-	-	-	-
																	-			
Total			**5,306,269**	**5,569,903**		**3,876,172**	**(3,046,757)**	**3,876,172**		**7,000,000**	**(7,000,000)**			**3,876,172**	**(3,876,172)**			**(7,000,000)**	**10,876,172**	**3,876,172**

Projected Taxable Income (Loss)
Carville Park Apts
Base Case

Integrity: OK		*Forecast*	*Forecast*	*Forecast*	*Forecast*	*Forecast*	*Forecast*	*Forecast*	*Forecast*	*Forecast*	*Forecast*	*Forecast*	*Forecast*	*Forecast*	*Forecast*	*Forecast*	*Forecast*
Signals: OK		Yr 1	Yr 2	Yr 3	Yr 4	Yr 5	Yr 6	Yr 7	Yr 8	Yr 9	Yr 10	Yr 11	Yr 12	Yr 13	Yr 14	Yr 15	Yr 16
Period Begin		15-Mar-24	01-Jan-25	01-Jan-26	01-Jan-27	01-Jan-28	01-Jan-29	01-Jan-30	01-Jan-31	01-Jan-32	01-Jan-33	01-Jan-34	01-Jan-35	01-Jan-36	01-Jan-37	01-Jan-38	01-Jan-39
Period End		31-Dec-24	31-Dec-25	31-Dec-26	31-Dec-27	31-Dec-28	31-Dec-29	31-Dec-30	31-Dec-31	31-Dec-32	31-Dec-33	31-Dec-34	31-Dec-35	31-Dec-36	31-Dec-37	31-Dec-38	31-Dec-39
NOI	**32,357,208**	**1,296,176**	**1,420,512**	**1,862,085**	**1,971,053**	**1,998,130**	**2,025,379**	**2,052,790**	**2,080,357**	**2,108,070**	**2,135,920**	**2,163,897**	**2,191,991**	**2,220,191**	**2,248,486**	**2,276,863**	**2,305,309**
Book to tax adjustments																	
Add: Grant: [Spare 1]	-	-	-	-	-	-	-	-	-	-	-	-	-	-	-	-	-
Add: Grant: [Spare 2]	-	-	-	-	-	-	-	-	-	-	-	-	-	-	-	-	-
Add: Grant: [Spare 3]	-	-	-	-	-	-	-	-	-	-	-	-	-	-	-	-	-
Add: Grant: [Spare 4]	-	-	-	-	-	-	-	-	-	-	-	-	-	-	-	-	-
Add: Proceeds from Sale of State Tax Credits	2,760,000	2,760,000	-	-	-	-	-	-	-	-	-	-	-	-	-	-	-
Add: Replacement Reserves	1,132,252	-	28,800	64,581	66,518	68,514	70,569	72,686	74,867	77,113	79,426	81,809	84,264	86,791	89,395	92,077	94,839
Add: Interest Earned on Reserves	369,110	3,562	10,727	34,891	38,289	19,389	19,753	20,620	21,518	21,884	22,839	23,826	24,192	25,241	26,326	27,447	28,607
EBITDA	**36,618,570**	**4,059,738**	**1,460,039**	**1,961,557**	**2,075,860**	**2,086,033**	**2,115,701**	**2,146,097**	**2,176,742**	**2,207,067**	**2,238,185**	**2,269,532**	**2,300,447**	**2,332,224**	**2,364,207**	**2,396,387**	**2,428,755**
Less: Real Property Depreciation	(26,798,045)	(349,490)	(1,070,509)	(1,914,463)	(1,924,218)	(1,924,218)	(1,910,981)	(1,845,746)	(1,762,898)	(1,761,940)	(1,761,940)	(1,761,940)	(1,761,940)	(1,761,940)	(1,761,940)	(1,761,940)	(1,761,940)
Less: Site Depreciation	(105,730)	-	(3,111)	(7,285)	(7,333)	(7,333)	(7,333)	(7,333)	(7,333)	(7,333)	(7,333)	(7,333)	(7,333)	(7,333)	(7,333)	(7,333)	(7,333)
Less: Personal Property Depreciation (include RR)	(83,600)	(13,237)	(16,720)	(16,720)	(16,720)	(16,720)	(3,483)	-	-	-	-	-	-	-	-	-	-
Less: Other Depreciation	-	-	-	-	-	-	-	-	-	-	-	-	-	-	-	-	-
Less: Bonus Deprec. - Site Work	(165,000)	-	(138,947)	(26,053)	-	-	-	-	-	-	-	-	-	-	-	-	-
Less: Bonus Deprec. - Personal Property (include RR)	(1,217,085)	(125,400)	(919,314)	(172,371)	-	-	-	-	-	-	-	-	-	-	-	-	-
Total Depreciation	**(28,369,459)**	**(488,126)**	**(2,148,601)**	**(2,136,892)**	**(1,948,271)**	**(1,948,271)**	**(1,921,798)**	**(1,853,080)**	**(1,770,231)**	**(1,769,273)**	**(1,769,273)**	**(1,769,273)**	**(1,769,273)**	**(1,769,273)**	**(1,769,273)**	**(1,769,273)**	**(1,769,273)**
Less: Amortization of Other Items	(965,294)	(71,002)	(89,686)	(89,686)	(71,214)	(66,353)	(58,436)	(56,353)	(56,353)	(56,353)	(56,353)	(56,353)	(56,353)	(56,353)	(56,353)	(56,353)	(11,740)
Less: Expensed Development Costs	(100,000)	-	-	(100,000)	-	-	-	-	-	-	-	-	-	-	-	-	-
Less: Expensed Construction Period Interest	(4,891,013)	(1,327,464)	(2,925,026)	(638,522)	-	-	-	-	-	-	-	-	-	-	-	-	-
Less: Stabilized Interest Expense	(25,890,594)	(361,088)	(431,962)	(1,672,527)	(1,911,739)	(1,869,561)	(1,858,874)	(1,847,438)	(1,835,185)	(1,822,039)	(1,807,908)	(1,792,680)	(1,776,213)	(1,758,315)	(1,738,720)	(1,717,020)	(1,689,323)
Less: Investor Asset Mgmt Fee	(151,177)	(7,500)	(7,725)	(7,957)	(8,195)	(8,441)	(8,695)	(8,955)	(9,224)	(9,501)	(9,786)	(10,079)	(10,382)	(10,693)	(11,014)	(11,344)	(11,685)
Less: Non-Profit Sponsor Asset Mgmt Fee	(403,138)	(20,000)	(20,600)	(21,218)	(21,855)	(22,510)	(23,185)	(23,881)	(24,597)	(25,335)	(26,095)	(26,878)	(27,685)	(28,515)	(29,371)	(30,252)	(31,159)
Less: Developer Asset Mgmt Fee	(403,138)	(20,000)	(20,600)	(21,218)	(21,855)	(22,510)	(23,185)	(23,881)	(24,597)	(25,335)	(26,095)	(26,878)	(27,685)	(28,515)	(29,371)	(30,252)	(31,159)
Less: Ground Lease Rent (Subordinate)	(279,589)	(15,000)	(15,300)	(15,606)	(15,918)	(16,236)	(16,561)	(16,892)	(17,230)	(17,575)	(17,926)	(18,285)	(18,651)	(19,024)	(19,404)	(19,792)	(20,188)
Less: Soft Debt	(3,876,197)	-	-	(365,595)	(437,513)	(341,992)	(330,434)	(317,671)	(303,696)	(288,504)	(272,088)	(254,443)	(235,566)	(215,452)	(194,096)	(171,497)	(147,651)
Less: Partnership Expenses	-	-	-	-	-	-	-	-	-	-	-	-	-	-	-	-	-
Taxable Income (Loss)	**(28,711,029)**	**1,749,558**	**(4,199,462)**	**(3,107,664)**	**(2,360,700)**	**(2,209,842)**	**(2,125,469)**	**(2,002,055)**	**(1,864,373)**	**(1,806,848)**	**(1,747,340)**	**(1,685,339)**	**(1,621,360)**	**(1,553,917)**	**(1,483,396)**	**(1,409,397)**	**(1,283,424)**
Allocation of taxable income (loss)																	
Special Allocation to GP (GP Distribution)	-	-	-	-	-	-	-	-	-	-	-	-	-	-	-	-	-
Total Taxable Income (Loss)	(28,711,029)	**1,749,558**	**(4,199,462)**	**(3,107,664)**	**(2,360,700)**	**(2,209,842)**	**(2,125,469)**	**(2,002,055)**	**(1,864,373)**	**(1,806,848)**	**(1,747,340)**	**(1,685,339)**	**(1,621,360)**	**(1,553,917)**	**(1,483,396)**	**(1,409,397)**	**(1,283,424)**
Potential Reallocation	(9,009,073)	-	-	-	-	-	-	-	-	-	(100,145)	(1,668,552)	(1,603,647)	(1,535,279)	(1,463,833)	(1,388,911)	(1,248,707)
Taxable Income (Loss) distribution	**(28,711,029)**	**1,749,558**	**(4,199,462)**	**(3,107,664)**	**(2,360,700)**	**(2,209,842)**	**(2,125,469)**	**(2,002,055)**	**(1,864,373)**	**(1,806,848)**	**(1,747,340)**	**(1,685,339)**	**(1,621,360)**	**(1,553,917)**	**(1,483,396)**	**(1,409,397)**	**(1,283,424)**
Investor Member	(19,673,245)	1,747,808	(4,195,263)	(3,104,557)	(2,358,339)	(2,207,632)	(2,123,344)	(2,000,052)	(1,862,508)	(1,805,041)	(1,645,447)	(15,102)	(16,092)	(17,084)	(18,080)	(19,077)	(33,434)
Managing Member	(9,011,944)	175	(420)	(311)	(236)	(221)	(213)	(200)	(186)	(181)	(100,320)	(1,668,720)	(1,603,809)	(1,535,434)	(1,463,981)	(1,389,052)	(1,248,835)
State Investor Member	-	-	-	-	-	-	-	-	-	-	-	-	-	-	-	-	-
Special Member	(25,840)	1,575	(3,780)	(2,797)	(2,125)	(1,989)	(1,913)	(1,802)	(1,678)	(1,626)	(1,573)	(1,517)	(1,459)	(1,399)	(1,335)	(1,268)	(1,155)
[Spare 1]	-	-	-	-	-	-	-	-	-	-	-	-	-	-	-	-	-
[Spare 2]	-	-	-	-	-	-	-	-	-	-	-	-	-	-	-	-	-
[Spare 3]	-	-	-	-	-	-	-	-	-	-	-	-	-	-	-	-	-
Special Allocation - Bonus Depreciation to GP																	
Bonus Depreciation - Site Work	-	-	-	-	-	-	-	-	-	-	-	-	-	-	-	-	-
Bonus Depreciation - Personal Property	-	-	-	-	-	-	-	-	-	-	-	-	-	-	-	-	-
Total Taxable Income (Loss)	(9,011,944)	175	(420)	(311)	(236)	(221)	(213)	(200)	(186)	(181)	(100,320)	(1,668,720)	(1,603,809)	(1,535,434)	(1,463,981)	(1,389,052)	(1,248,835)

Cash Flow Waterfall
Carville Park Apts
Base Case

Integrity: OK		*Forecast*	*Forecast*	*Forecast*	*Forecast*	*Forecast*	*Forecast*	*Forecast*	*Forecast*	*Forecast*	*Forecast*	*Forecast*	*Forecast*	*Forecast*	*Forecast*	*Forecast*	*Forecast*
Signals: OK		Yr 1	Yr 2	Yr 3	Yr 4	Yr 5	Yr 6	Yr 7	Yr 8	Yr 9	Yr 10	Yr 11	Yr 12	Yr 13	Yr 14	Yr 15	Yr 16
Period Begin		15-Mar-24	01-Jan-25	01-Jan-26	01-Jan-27	01-Jan-28	01-Jan-29	01-Jan-30	01-Jan-31	01-Jan-32	01-Jan-33	01-Jan-34	01-Jan-35	01-Jan-36	01-Jan-37	01-Jan-38	01-Jan-39
Period End		31-Dec-24	31-Dec-25	31-Dec-26	31-Dec-27	31-Dec-28	31-Dec-29	31-Dec-30	31-Dec-31	31-Dec-32	31-Dec-33	31-Dec-34	31-Dec-35	31-Dec-36	31-Dec-37	31-Dec-38	31-Dec-39
Operating Cash																	
Account																	
Balance b/f		-	712,897	1,501,308	2,327,721	356,220	356,220	356,220	356,220	356,219	356,219	356,220	356,220	356,220	356,220	356,220	356,220
Add: Initial funding	-	-	-	558,329	-	-	-	-	-	-	-	-	-	-	-	-	-
Add: Deposits from operations	7,394,466	712,897	781,282	247,489	285,243	312,695	340,343	368,179	396,197	424,391	452,753	481,275	509,949	538,767	567,718	596,794	625,984
Add: Interest income	73,153	-	7,129	20,596	23,277	3,562	3,562	3,562	3,562	3,562	3,562	3,562	3,562	3,562	3,562	3,562	3,562
Less: Withdrawals to fund operations	-	-	-	-	-	-	-	-	-	-	-	-	-	-	-	-	-
Less: Target cash balance	(4,630,858)	(356,220)	-	(356,220)	(356,220)	(356,220)	(356,220)	(356,220)	(356,220)	(356,220)	(356,220)	(356,220)	(356,220)	(356,220)	(356,220)	(356,220)	-
Distributable Balance	**(4,744,375)**	**356,677**	**1,501,308**	**1,971,502**	**2,280,022**	**316,258**	**343,905**	**371,741**	**399,759**	**427,953**	**456,315**	**484,837**	**513,512**	**542,329**	**571,281**	**600,356**	**985,766**
Add: Target cash Balance		356,220	-	356,220	356,220	356,220	356,220	356,220	356,220	356,220	356,220	356,220	356,220	356,220	356,220	356,220	-
Less: Waterfall distributions	(6,525,277)	-	-	-	(1,770,645)	(254,618)	(275,835)	(297,209)	(318,732)	(340,401)	(362,212)	(384,158)	(406,234)	(428,434)	(450,750)	(473,177)	(762,872)
Less: Partner distributions	(1,768,756)	-	-	-	(509,377)	(61,640)	(68,069)	(74,533)	(81,028)	(87,552)	(94,103)	(100,679)	(107,277)	(113,895)	(120,530)	(127,179)	(222,894)
Balance c/f		**712,897**	**1,501,308**	**2,327,721**	**356,220**	**356,220**	**356,220**	**356,220**	**356,219**	**356,219**	**356,220**	**356,220**	**356,220**	**356,220**	**356,220**	**356,220**	**(0)**
Operating Cash Flow																	
Waterfall																	
Distributable Cash Flow	8,294,034	-	-	-	2,280,022	316,258	343,905	371,741	399,759	427,953	456,315	484,837	513,512	542,329	571,281	600,356	985,766
Less: Investor Asset Mgmt Fee	(135,952)	-	-	-	(16,152)	(8,441)	(8,695)	(8,955)	(9,224)	(9,501)	(9,786)	(10,079)	(10,382)	(10,693)	(11,014)	(11,344)	(11,685)
Less: Non-Profit Sponsor Asset Mgmt Fee	(403,138)	-	-	-	(83,673)	(22,510)	(23,185)	(23,881)	(24,597)	(25,335)	(26,095)	(26,878)	(27,685)	(28,515)	(29,371)	(30,252)	(31,159)
Less: Developer Asset Mgmt Fee	(403,138)	-	-	-	(83,673)	(22,510)	(23,185)	(23,881)	(24,597)	(25,335)	(26,095)	(26,878)	(27,685)	(28,515)	(29,371)	(30,252)	(31,159)
Less: Ground Lease Rent (Subordinate)	(276,506)	-	-	-	(58,741)	(16,236)	(16,561)	(16,892)	(17,230)	(17,575)	(17,926)	(18,285)	(18,651)	(19,024)	(19,404)	(19,792)	(20,188)
Less: Soft 1: Deferred Developer Fee (DDF)	(275)	-	-	-	(275)	-	-	-	-	-	-	-	-	-	-	-	-
Less: Soft 2: NV Infrastructure Bank LT Note	(5,306,269)	-	-	-	(1,528,131)	(184,920)	(204,208)	(223,599)	(243,083)	(262,655)	(282,309)	(302,037)	(321,832)	(341,686)	(361,591)	(381,537)	(668,681)
Less: Soft 3: NNBCTC DevCorp LT Note	-	-	-	-	-	-	-	-	-	-	-	-	-	-	-	-	-
Cash Flow available for Distribution	**1,768,756**	**-**	**-**	**-**	**509,377**	**61,640**	**68,069**	**74,533**	**81,028**	**87,552**	**94,103**	**100,679**	**107,277**	**113,895**	**120,530**	**127,179**	**222,894**
Distributions																	
Investor Member	158,913	-	-	-	458	55	61	67	12,154	13,133	14,115	15,102	16,092	17,084	18,080	19,077	33,434
Managing Member	52,828	-	-	-	51	6	7	7	4,051	4,378	4,705	5,034	5,364	5,695	6,027	6,359	11,145
State Investor Member	-	-	-	-	-	-	-	-	-	-	-	-	-	-	-	-	-
Special Member	1,557,015	-	-	-	508,868	61,578	68,001	74,458	64,822	70,042	75,282	80,543	85,822	91,116	96,424	101,743	178,315
Cash Flow From Financing																	
Waterfall																	
Cash flow available	14,615,952	-	7,307,976	-	-	-	-	-	-	-	-	-	-	-	-	-	7,307,976
Less: Investor Asset Mgmt Fee	(15,225)	-	(15,225)	-	-	-	-	-	-	-	-	-	-	-	-	-	-
Less: Non-Profit Sponsor Asset Mgmt Fee	(40,600)	-	(40,600)	-	-	-	-	-	-	-	-	-	-	-	-	-	-
Less: Developer Asset Mgmt Fee	(40,600)	-	(40,600)	-	-	-	-	-	-	-	-	-	-	-	-	-	-
Less: Ground Lease Rent (Subordinate)	(27,217)	-	(27,217)	-	-	-	-	-	-	-	-	-	-	-	-	-	-
Less: Soft 1: Deferred Developer Fee (DDF)	-	-	-	-	-	-	-	-	-	-	-	-	-	-	-	-	-
Less: Soft 2: NV Infrastructure Bank LT Note	(5,569,903)	-	-	-	-	-	-	-	-	-	-	-	-	-	-	-	(5,569,903)
Less: Soft 3: NNBCTC DevCorp LT Note	-	-	-	-	-	-	-	-	-	-	-	-	-	-	-	-	-
Cash Flow available for Distribution	**8,922,407**	**-**	**7,184,334**	**-**	**-**	**-**	**-**	**-**	**-**	**-**	**-**	**-**	**-**	**-**	**-**	**-**	**1,738,073**
Distributions																	
Investor Member	267,177	-	6,466	-	-	-	-	-	-	-	-	-	-	-	-	-	260,711
Managing Member	87,622	-	718	-	-	-	-	-	-	-	-	-	-	-	-	-	86,904
State Investor Member	-	-	-	-	-	-	-	-	-	-	-	-	-	-	-	-	-
Special Member	8,567,608	-	7,177,150	-	-	-	-	-	-	-	-	-	-	-	-	-	1,390,458

EXHIBIT 9

OPERATING BUDGET

For fiscal year ending March 31, 2024.

Northern Nevada Building & Construction Trade Council Development Corporation dba Carville Park Apartments

Historical And Projected Consolidated Statement Of Financial Position

For the Budgeting Period Ending March 31, 2024

For the fiscal year ending	*Actual* **March 31, 2021**	*Actual* **March 31, 2022**	*Actual* **March 31, 2023**	*Budget* **March 31, 2024**
CURRENT ASSETS				
Cash and Equivalents	334,404	346,743		612,859
Accounts Receivable	13,064	20,708		20,000
Prepaid Expenses	38,355	42,011		45,000
Due from Related Party	63,730	63,730		63,730
TOTAL CURRENT ASSETS	449,553	473,192	-	741,589
PROPERTY AND EQUIPMENT				
Furniture and Equipment	890,231	897,761		897,761
Buildings and Improvements	2,601,484	2,601,484		2,601,484
Land and Improvements	1,292,464	1,292,464		1,292,464
	4,784,179	4,791,709	-	4,791,709
Less Accumulated Depreciation	(3,839,682)	(3,929,021)		(4,107,699)
TOTAL PROPERTY AND EQUIPMENT	944,497	862,688	-	684,010
OTHER ASSETS				
Tenant Deposits Held in Trust	42,458	64,778		35,000
Certificates of Deposit	27,203	-		-
Reserve for Replacements	42,489	358,313		369,062
TOTAL OTHER ASSETS	112,150	423,091	-	404,062
TOTAL ASSETS	1,506,200	1,758,971	-	1,829,662
CURRENT LIABILITIES				
Accounts Payable	11,823	44,712		25,000
Accrued Liabilities	685	633		-
Tenant Security Deposits	30,890	33,286		35,000
Prepaid Rents	7,098	7,799		8,000
TOTAL CURRENT LIABILITIES/TOTAL LIABILITIES	50,496	86,430	-	68,000
NET ASSETS				
Net Assets without Donor Restrictions	1,455,704	1,672,541		1,897,662
Net Assets with Donor Restrictions	-	-		
TOTAL NET ASSETS	1,455,704	1,672,541	-	1,897,662
TOTAL LIABILITIES AND NET ASSETS	1,506,200	1,758,971	-	1,965,662

Northern Nevada Building & Construction Trade Council Development Corporation dba Carville Park Apartments

Historical and Projected Consolidated Statement of Activities

For the Budgeting Period Ending March 31, 2024

For the fiscal year ending	*Actual* **March 31, 2021**	*Actual* **March 31, 2022**	*Actual* **March 31, 2023**	*Budget* **March 31, 2024**
REVENUES				
Rental	1,405,091	1,464,089		1,508,012
Interest Income	618	364		500
Tenant Charges	11,762	9,749		12,000
Laundry, Vending, and Miscellaneous	35,458	39,131		40,000
TOTAL REVENUE	1,452,929	1,513,333	-	1,560,512
EXPENSES				
Program Services				
Administrative	102,875	125,821		129,596
Utilities	175,350	182,366		187,837
Operating and Maintenance	402,240	447,670		461,100
Taxes and Insurance	145,108	142,053		146,315
Insurance and Employee Benefits	73,604	80,458		82,872
Depreciation	91,548	89,339		92,019
	990,725	1,067,707	-	1,099,738
Supporting Activities				
Management Fees	117,312	117,312		120,831
Office Salaries	64,866	78,050		80,392
Office Expenses	31,858	33,427		34,430
	214,036	228,789	-	235,653
TOTAL EXPENSES	1,204,761	1,296,496	-	1,335,391

EXHIBIT 10

FINANCIAL OBLIGATIONS

N/A – NNBCTC DevCorp does not currently have any material financial obligations that are payable beyond 90-days.

EXHIBIT 15A

NON-PROFIT FORMATION DOCUMENTS

Articles of Incorporation, together with all amendments.

Filing Fee: NONE
(NON-PROFIT)
Organization Fee: $1.00
By: Constance L. Ashcraft
1555 Ridgeview Drive
Reno, Nevada 89503

FILED
IN THE OFFICE OF THE
SECRETARY OF STATE OF THE
STATE OF NEVADA

APR 6 1979

DEAL SWACKHAMER - SECRETARY OF STATE

1869-79

ARTICLES OF INCORPORATION

of

NORTHERN NEVADA BUILDING & CONSTRUCTION

TRADES COUNCIL DEVELOPMENT CORPORATION

81.290 et seq

KNOW ALL MEN BY THESE PRESENTS:

That we, the undersigned, do hereby associate ourselves into a corporation under and pursuant to the provisions and by virtue of Chapter 81, inclusive, and more specifically the Charitable Corporation Act of 1971 of the Nevada Revised Statutes, and we do hereby make, subscribe, acknowledge, certify and adopt the following Articles of Incorporation.

ARTICLE I

(a) The name of the Corporation is NORTHERN NEVADA BUILDING & CONSTRUCTION TRADES COUNCIL DEVELOPMENT CORPORATION (hereinafter referred to as "The Corporation").

(b) The existence of the Corporation will not exceed fifty (50) years.

(c) The principal office of the Corporation will be located at 1150 Terminal Way, Washoe County, Reno, Nevada.

(d) The resident agent of the Corporation is Frank Byrne, Secretary-Treasurer, Building & Construction Trades Council of Northern Nevada, whose post office address is 1150 Terminal Way, Reno, Nevada. The resident agent may be changed from time to time.

ARTICLE II

The purpose for which the Corporation is formed, and the business objects to be carried on and promoted by it are as follows:

(a) To provide, on a nonprofit basis, housing for low and moderate income families, elderly persons and families displaced from urban renewal areas or as a result of governmental action, where no adequate housing exists for such groups, pursuant to Section 221 (d) (3) of the National Housing Act, as amended.

(b) The Corporation is irrevocably dedicated to, and operated exclusively for, charitable purposes on a non-profit basis; and no part of the income or assets of the Corporation shall be distributed to, nor inure to the benefit of, any individual, except that the corporation shall be authorized and empowered to pay reasonable compensation for services rendered and to make payments and dis-

tributions in furtherance of the purposes set forth in Article Third hereof. No substantial part of the activities of the corporation shall be the carrying on of propaganda, or otherwise attempting to influence legislation, and the corporation shall not participate in, or intervene in (including the publishing or distribution of statements) any political campaign on behalf of any candidate for public office. Notwithstanding any other provision of these articles, the corporation shall not carry on any other activities not permitted to be carried on (a) by a corporation exempt from Federal income tax under section 501 (c) (3) of the Internal Revenue Code of 1954 (or the corresponding provision of any future United States Internal Revenue Law) or (b) by a corporation, contributions to which are deductible under section 170(c)(2) of the Internal Revenue Code of 1954 (or the corresponding provision of any future United States Internal Revenue Law.

ARTICLE III

The corporation is empowered:

(a) To buy, own, sell, convey, assign, mortgage or lease any interest in real estate and personal property and to construct, maintain and operate improvements thereon necessary or incident to the provision of such housing as described in Article II hereof.

(b) To borrow money and issue evidence of indebtedness in furtherance of any or all of the objects of its business, and to secure the same by mortgage, pledge or other lien on the Corporation's property.

(c) To do and perform all acts reasonably necessary to accomplish the purposes of the Corporation, including the execution of a Regulatory Agreement with the Secretary of Housing and Urban Development, acting by and through the Federal Housing Commissioner, hereinafter called "Secretary" or "Commissioner" or "Federal Housing Commissioner" and of such other instruments and undertakings as may be necessary to enable the Corporation to secure the benefits of financing with the Assistance of mortgage insurance under the provisions of the National Housing Act. Such Regulatory Agreement and other instruments and undertakings shall remain binding upon the Corporation, its successors and assigns, so long as a mortgage on the Corporation's property is insured or held by the Federal Housing Commissioner.

(d) In the event of the dissolution of the Corporation or the winding up of its affairs, or other liquidation of its assets, the Corporation's property shall not be conveyed to any organization created or operated for profit or to any individual for less than the fair market value of such property, and all assets remaining after the payment of the Corporation's debts shall be conveyed or distributed only to an organization or organizations created and operated for charitable and nonprofit purposes and who are exempt from Federal Income Taxes pursuant to Section 501 (c) (3) of the Internal Revenue Code, similar to those of the Corporation: PROVIDED, however, that the Corporation shall at all times have the power to convey any or all of its property to the Secretary of Housing and Urban Development or his nominee.

ARTICLE IV

The number of trustees of the Corporation shall be no less than six (6) nor more than nine (9), and shall be elected by the members of the Corporation from the membership. The trustees of the Corporation must, at all times, be members of the Corporation. No nonmember of the Corporation may sit as a director. The original trustees and the term for which each shall serve, are set below:

RICHARD J. CIESSYNSKI	one year
FRANK BYRNE	one year
ROLAND CHRISTIANSEN	one year
DON CARROTHERS	one year
WHITEY CRONIN	one year
JOHN BYRNE	one year

The trustees shall serve without compensation.

Membership in the Corporation shall, at all times, be limited to individuals who are members of labor unions or labor organizations affiliated with the Building & Construction Trades Council of Northern Nevada and who have the approval of the Executive Board Members of the Building & Construction Trades Council of Northern Nevada. Each member shall be entitled to one vote.

In the event that a member of the Corporation ceases to be a member of a labor union or labor organization affiliated with the Building and Construction Trades Council of Northern Nevada, or, if the aforesaid approval is withdrawn, then, in either event, such shall constitute automatic resignation as a member and/or trustee of the Corporation.

The officers of the Corporation, as provided by the By-Laws of the Corporation, shall be elected by the trustees of the Corporation, in the manner therein set out, and shall serve until their successors are elected and have qualified. The trustees shall elect the regular officers of the Corporation at the annual meeting, for terms of one year. The secretary-treasurer may be one and the same person, and need not be a trustee of the Corporation. Other officers must be trustees of the Corporation.

The annual meeting shall be held on the 1st day in March of each year.

ARTICLE V

By-Laws of the Corporation may be adopted by the trustees at any regular meeting or at any special meeting called for that purpose, so long as they are not inconsistent with the provisions of these Articles or of the Regulatory Agreement between the Corporation and the Federal Housing Commissioner, pursuant to Article II hereof.

ARTICLE VI

So long as a mortgage on the Corporation's property is insured or held by the Federal Housing Commissioner, these Articles may not be amended without the prior written approval of the Commissioner.

Signed by the incorporators this 4 day of March, 1979.

RICHARD J. CIESYNSKI
Iron Workers Union Local #118
1150 Terminal Way
Reno, Nevada

FRANK BYRNE
Building & Construction Trades Council
1150 Terminal Way
Reno, Nevada

ROLAND CHRISTENSEN
Cement Mason's Union Local #241
1150 Terminal Way
Reno, Nevada

DON CARROTHERS
Laborer's Local #169
P. O. Box 644
Sparks, Nevada

JOHN BYRNE
Electrical Workers Local #401
1745 Vassar
Reno, Nevada

WHITEY CROWIN
Bricklayers & Tilesetters Local #1
1150 Terminal Way
Reno, Nevada

* * * * *

STATE OF NEVADA)
) ss.
COUNTY OF WASHOE)

On this 4 day of March, 1979, personally appeared before the undersigned, a Notary Public, in and for the said County and State, RICHARD J. CIESYNSKI, FRANK BYRNE, ROLAND CHRISTIANSEN, DON CARROTHERS, WHITEY CROWIN and JOHN BYRNE, known to me to be the persons described in and who executed the foregoing instrument and who acknowledged to me that they executed the same freely and voluntarily and for the uses and purposes therein mentioned.

IN WITNESS WHEREOF, I have hereunto set my hand and affixed my official seal the day and year in this certificate first above mentioned.

NOTARY PUBLIC

JOSEPH F. McDONALD, JR.
Notary Public - State of Nevada
Washoe County
My Commission Expires June 26, 1979

EXHIBIT 15B

NON-PROFIT FORMATION DOCUMENTS

Certificate of Status/Good Standing in the State of Nevada.

SECRETARY OF STATE

STATE OF NEVADA

CERTIFICATE OF EXISTENCE WITH STATUS IN GOOD STANDING

I, Barbara K. Cegavske, the duly qualified and elected Nevada Secretary of State, do hereby certify that I am, by the laws of said State, the custodian of the records relating to filings by corporations, non-profit corporations, corporations sole, limited-liability companies, limited partnerships, limited-liability partnerships and business trusts pursuant to Title 7 of the Nevada Revised Statutes which are either presently in a status of good standing or were in good standing for a time period subsequent of 1976 and am the proper officer to execute this certificate.

I further certify that the records of the Nevada Secretary of State, at the date of this certificate, evidence, **NORTHERN NEVADA BUILDING & CONSTRUCTION TRADES COUNCIL DEVELOPMENT COR**, as a DOMESTIC NONPROFIT CORPORATION (82) duly organized under the laws of Nevada and existing under and by virtue of the laws of the State of Nevada since 04/06/1979, and is in good standing in this state.

IN WITNESS WHEREOF, I have hereunto set my hand and affixed the Great Seal of State, at my office on 05/12/2022.

Barbara K. Cegavske

BARBARA K. CEGAVSKE
Secretary of State

Certificate Number: B202205122662472
You may verify this certificate online at http://www.nvsos.gov

EXHIBIT 15C

NON-PROFIT FORMATION DOCUMENTS

Bylaws, together with all amendments

BY-LAWS

NORTHERN NEVADA BUILDING & CONSTRUCTION

TRADES COUNCIL DEVELOPMENT CORPORATION

I. Membership: The membership of the Corporation shall consist of persons who are members of a labor union or labor organization affiliated with the Building & Construction Trades Council of Northern Nevada. Any individual who so qualifies shall be elected by a majority vote of the entire Board of Trustees at any annual, regular or special meeting of the Board.

A member shall remain a member so long as he shall remain a member of a labor union or labor organization affilated with the Building & Construction Trades Council of Northern Nevada as provided in the Articles of Incorporation. Any member may resign at any time by delivering a written resignation to the Corporation. The acceptance of any such resignation, unless required by the terms thereof, shall not be necessary to make the same effective. Membership shall also be terminated by death, expulsion for cause, liquidation or dissolution of the Corporation.

II. Meetings of Members.

A. Place of Meeting. All meetings of the members of the Corporation shall be held at the place specified in the notice of the meeting or in the waiver of notice thereof.

B. Annual Meeting. The annual meeting of the members of the Corporation for the election of Trustees and for the transaction of such other business as may properly come before the meeting shall be held on the first day of March, if not a legal holiday, or, if a legal holiday, then on the next succeeding day not a legal holiday, at the hour specified in the notice of the meeting or in the waiver of notice thereof.

C. Special Meetings. Special meetings of the members of the Corporation may be called at any time by the President of the Corporation at such time and place as may be specified in the notice or waiver of notice thereof.

D. Notice of Meetings of Members. Written notice of each annual or special meeting of the members of the Corporation shall be mailed to each member addressed to each member at his address as it appears on the records of the Corporation not less than ten or more than fifty days before the date of the meeting. Written notice shall declare the time, date and place of the meeting and, unless it is an annual meeting, indicate that it is being issued by or at the direction of the person or persons calling the meeting and state the purpose or purposes for which the meeting is being called. Notice of any meeting need not be given to any member if waived by such member before or after the meeting in writing. The attendance of any member at a meeting, in person or by proxy, without protesting prior to the conclusion of the meeting the lack of notice of such a meeting, shall constitute a waiver of notice by him.

E. Quorum. Members entitled to cast a majority of the total number of votes entitled to be cast thereat shall constitute a quorum at a meeting of members for the transaction of any business.

III. Board of Trustees:

The Board of Trustees shall consist of six (6) members and is vested with complete and unrestrained authority in the management of all the affairs of the Corporation.

Each Trustee elected at the first annual meeting of the members shall hold office thereafter until their successors are elected and shall qualify; provided, however, that any Director elected to fill an unexpired term (whether resulting from the death, resignation or removal or honorary trusteeship or created by an increase in the number of Trustees) shall hold office until the next annual meeting of members.

Any Trustee may resign at any time by delivering a written resignation to the Corporation. The acceptance of any such resignation, unless required by the terms thereof, shall not be necessary to make the same effective.

Board members may be removed by a 2/3 vote of the entire Board for cause, failure to attend meetings, malfeasance, or for participating in any action that the Board may deem detrimental to the reputation of the Corporation.

When any vacancy occurs among the Trustees by death, resignation, disqualification or other cause, or by creating a new Board seat, the Trustees will, at any regular or special meeting, fill the vacancy by a majority vote.

IV. Powers and Limitations of Trustees:

A. No Trustee or Officer of the Corporation shall be entitled to any salary or compensation for any normal or ordinary services performed for the Corporation. However, employee's salary or compensation and extraordinary services performed by Trustees and other officers shall be fixed by resolution of the Board of Trustees.

B. The Trustees shall have power to authorize and cause to be executed, mortgages and encumbrances upon the property and franchise of the Corporation, and shall have the authority to dispose of any property, real or personal, of the Corporation in furtherance of the purpose of the Corporation.

C. No Trustee is authorized to execute any actions binding upon the Corporation without prior knowledge and approval of the Board or Executive Committee except as set forth herein.

D. Routine sundry bills will be paid by the Secretary-Treasurer and submitted to the Board at the following Board meeting. Any expenditure in excess of $250 must be authorized by the Executive Committee or the Board prior to payment.

V. Board of Trustee's Meetings:

A. Conduct of Board Meetings:

Meetings will be conducted under Roberts' Rules of Order.

The regular Order of Business at meetings of the Board of Trustees shall be as follows:

1. Reading and approval of the minutes of any previous meeting or meetings.

2. Reports of officers and committeemen.

3. Unfinished business.

4. New business.

5. Adjournment.

B. Annual Meetings. The annual meetings of the Board of Trustees for the election of the officers of the Corporation and for the transaction of such other business as may properly come before it shall be held at the place at which the annual meeting of the members of the Corporation shall be held, and shall be held immediately following such meeting.

C. Regular Meetings. The Board of Trustees from time to time may provide by resolution for the holding of such regular meetings as it may determine upon and may fix the time and place thereof.

D. Special Meetings. Special meetings of the Board of Directors may be called at any time by the President of the Corporation or by any Trustee at such time and place as may be specified in the notice of the meetings or in the waiver of notice thereof.

E. Notice of Meetings. No notice of any regular meeting of the Board of Trustees need be given, provided, however, that if the Board of Trustees shall fix or change the time or place of regular meetings, notice of such action shall be mailed promptly to each Trustee who shall not have been present at the meeting at which such action was taken, addressed to such Trustee at his address as it appears on the records of the Corporation or sent by telegraph to such address, or delivered to such Trustee personally. Notice of each annual and special meeting of the Board of Trustees shall be mailed to each Trustee addressed to such Trustee at his address as it appears on the records of the Corporation at least five days before the day on which the meeting is to be held, or sent by telegraph to such address, or delivered to such Trustee personally, not later than two days before the day on which the meeting is to be held. Notice of any meeting need not be given to any Trustee, however, if waived by such Trustee before or after the meeting in writing or by telegraph. No notice need be given of any meeting at which every member of the Board of Trustees shall be present, and any business may be transacted thereat. No notice need be given of any adjourned meeting.

F. Quorum:

A quorum of the Board shall consist of a majority of the current Board members.

G. Majority:

A majority vote of a quorum will be required to transact business.

H. Executive Committee:

At the annual meeting to be held in March of every year, the Board will select an Executive Committee consisting of at least the following:

President
Vice President
Secretary-Treasurer

The Executive Committee shall have all such powers and perform all such duties as may be expressly determined by the Board of Trustees.

VI. Officers and Their Duties: The Officers of the Corporation shall be elected by the Board of Trustees to serve until replaced by the Board. The President shall have the power to call, in accordance with the Section V(D), and conduct meetings of the Board of Trustees. He shall be a member of the Executive Committee and the Chairman thereof; he shall preside at all meetings of the Board of Trustees and shall perform such other duties as shall be prescribed by the Board of Trustees.

The Vice President shall be vested with all the powers and perform all the duties of the President in his absence or inability to act, and he shall so perform such other duties as shall be prescribed by the Board of Trustees.

The Secretary-Treasurer shall be the chief executive officer of the Corporation and shall supervise, subject to the control of the Board of Trustees, the Corporation's affairs, with full power to execute all resolutions and orders of the Board of Trustees and perform all duties not especially entrusted to some other officer of the Corporation. He shall prepare an agenda for each meeting of the Board of Trustees and shall be a member of the Executive Committee. He shall have full power to execute all agreements, contracts, mortgages, notes, checks, vouchers or any type document on behalf of the Corporation relative to any of the properties owned by the Corporation.

In connection with the proposed Carville Park Apartments, the Secretary-Treasurer has the full authority to execute on behalf of the Corporation documents including mortgages and notes, agreements or any other type documents required by HUD and/or the lender or others relative to the planning, financing, building and operation of the proposed Carville Park Apartment project.

The Secretary-Treasurer shall further have power to sign any check, receipts and vouchers for payments made by the Corporation. The Secretary-Treasurer

shall keep an accurate accounting of the funds of the Corporation and shall work with the President and other Trustees to this end. The Secretary-Treasurer shall have the custody of all the funds of the Corporation. When necessary, he shall endorse on behalf of the Corporation, all checks. He shall deposit all monies received to the credit of the Corporation in such bank as the Board of Trustees may designate. He may sign all receipts and vouchers for payments made by the Corporation, except as herein otherwise provided. He shall also have care and custody of such other property belonging to the Corporation as the Board of Trustees shall designate. He may sign all papers required by law or by these By-Laws or the Board of Trustees to be signed by the Secretary-Treasurer. Whenever required by the Board of Trustees, he shall render a statement of his cash account; he shall enter regularly full and accurate accounts of all monies received and paid by him on account of the Corporation. He shall exhibit the books of account to any Trustee of the Corporation, and shall perform all acts incident to the position of Treasurer, subject to the control of the Board of Trustees.

The Secretary-Treasurer shall keep the minutes of all meetings of the Board of Trustees and the minutes of all meetings of the Executive Committee in books provided for that purpose. He shall attend to the giving and serving of all notices of the Corporation. He may sign in the name of the Corporation, all contracts authorized by the Board of Trustees or Executive Committee. He shall keep such other books and papers as the Board of Trustees or the Executive Committee may direct, which shall be open to the examination of any Trustee upon application at any meeting; and shall in general perform all duties incident to the office of Secretary-Treasurer.

The Board of Trustees may appoint such additional officers of the Corporation as it may deem advisable; prescribe their duties, and all such appointed officers shall be subject to removal at any time by the Board of Trustees. These appointed additional officers shall be chosen and appointed in such manner and shall hold their office for such terms as the Board of Trustees may resolve.

The Board of Trustees may appoint an Assistant Treasurer who shall have such powers and perform such duties as may be prescribed for him by the Secretary-Treasurer or by the Board of Trustees.

The Board of Trustees may appoint an Assistant Secretary who shall have such power and perform such duties as may be prescribed by the Secretary or the Board of Trustees.

The Board of Trustees shall have the power from time to time to provide for the management of the Corporation in such manner as they see fit, and in particular from time to time to delegate any of the powers of the Board in the course of the current business or activity of the Corporation to any standing or special committee or to any officer or agent or employee, and to appoint any persons to be agents of the Corporation with such powers (including the power to sub-delegate) and upon such terms as may be deemed fit.

VII. Copies of By-Laws and Articles:

A copy of the By-Laws and Articles of Incorporation of the Corporation shall be kept at its principal office in the County of Washoe, State of Nevada, for the inspection of all who are authorized or have the right to see the same. All other books of the Corporation shall be kept as such places as may be prescribed by the Board of Trustees.

KNOW ALL MEN BY THESE PRESENTS: That we, the undersigned, being the Board of Trustees of the above named Corporation, do hereby consent to the foregoing By-Laws and adopt the same as and for the By-Laws of the Northern Nevada Building & Construction Trades Council Development Corporation.

IN WITNESS WHEREOF, we have hereunto set our hands this _____ day of April, 1979.

Frank W. Byrne
Secretary-Treasurer
Frank Byrne

APPROVED:

BOARD OF TRUSTEES

Richard J. Ciensynski
PRESIDENT
Richard J. Ciensynski

Roland Christensen
VICE PRESIDENT
Roland Christiansen

Frank Byrne
SECRETARY-TREASURER
Frank Byrne

EXHIBIT 15D

NON-PROFIT FORMATION DOCUMENTS

501 (c)(3) Determination Letter(s) from the IRS

Department of the Treasury
Internal Revenue Service
Tax Exempt and Government Entities
PO Box 2508
Cincinnati, OH 45201

Date:
December 28, 2022
Employer ID number:
88-0176297
Form 990 required:
Yes
Person to contact:
Name: MS. WINN
ID number: 1000110131

NORTHERN NEVADA BUILDING AND
1819 HYMER AVE STE 106
SPARKS, NV 89431

Dear Sir or Madam:

We're responding to your request dated October 21, 2022, about your tax-exempt status.

We issued you a determination letter in May 1979, recognizing you as tax-exempt under Internal Revenue Code (IRC) Section 501(c)(3).

We also show you're not a private foundation as defined under IRC Section 509(a) because you're described in IRC Section 509(a)(2).

Donors can deduct contributions they make to you as provided in IRC Section 170. You're also qualified to receive tax-deductible bequests, legacies, devises, transfers, or gifts under IRC Sections 2055, 2106, and 2522.

In the heading, we indicated whether you must file an annual information return. If you're required to file a return, you must file one of the following by the 15th day of the 5th month after the end of your annual accounting period.

- Form 990, Return of Organization Exempt From Income Tax
- Form 990-EZ, Short Form Return of Organization Exempt From Income Tax
- Form 990-N, Electronic Notice (e-Postcard) for Tax-Exempt Organizations Not Required to File Form 990 or Form 990EZ
- Form 990-PF, Return of Private Foundation or Section 4947(a)(1) Trust Treated as Private Foundation

According to IRC Section 6033(j), if you don't file a required annual information return or notice for 3 consecutive years, we'll revoke your tax-exempt status on the due date of the 3rd required return or notice.

You can get IRS forms or publications you need from our website at www.irs.gov/forms-pubs or by calling 800-TAX-FORM (800-829-3676).

If you have questions, call 877-829-5500 between 8 a.m. and 5 p.m., local time, Monday through Friday (Alaska and Hawaii follow Pacific time).

Thank you for your cooperation.

Sincerely,

Stephen A. Martin
Director, Exempt Organizations
Rulings and Agreements

EXHIBIT 15E.1

NON-PROFIT FORMATION DOCUMENTS

Form 990 for tax year 2020

Forms 990 / 990-EZ Return Summary

For calendar year 2020, or tax year beginning 04/01/20 , and ending 03/31/21

NORTHERN NEVADA BUILDING & CONSTRUC 88-0176297
TRADES COUNCIL DEVELOPMENT CORP

Net Asset / Fund Balance at Beginning of Year			1,206,705
Revenue			
Contributions	1,003,911		
Program service revenue	448,401		
Investment income	618		
Capital gain / loss			
Fundraising / Gaming:			
Gross revenue			
Direct expenses			
Net income			
Other income	0		
Total revenue		1,452,930	
Expenses			
Program services	1,066,452		
Management and general	138,309		
Fundraising			
Total expenses		1,204,761	
Excess / (deficit)			248,169
Changes			
Net Asset / Fund Balance at End of Year			1,454,874

Reconciliation of Revenue

Total revenue per financial statements	1,452,930
Less:	
Unrealized gains	
Donated services	
Recoveries	
Other	
Plus:	
Investment expenses	
Other	
Total revenue per return	1,452,930

Reconciliation of Expenses

Total expenses per financial statements	1,204,761
Less:	
Donated services	
Prior year adjustments	
Losses	
Other	
Plus:	
Investment expenses	
Other	
Total expenses per return	1,204,761

Balance Sheet

	Beginning	Ending	Differences
Assets	1,309,491	1,506,210	
Liabilities	102,786	51,336	
Net assets	1,206,705	1,454,874	248,169

Miscellaneous Information

Amended return	
Return / extended due date	02/15/22
Failure to file penalty	

Form **8879-EO**

Department of the Treasury
Internal Revenue Service

IRS *e-file* Signature Authorization for an Exempt Organization

For calendar year 2020, or fiscal year beginning 4/01, 2020, and ending 3/31, 20 21

▶ **Do not send to the IRS. Keep for your records.**
▶ **Go to** *www.irs.gov/Form8879EO* **for the latest information.**

OMB No. 1545-0047

2020

Name of exempt organization or person subject to tax: NORTHERN NEVADA BUILDING & CONSTRUC TRADES COUNCIL DEVELOPMENT CORP

Taxpayer identification number: 88-0176297

Name and title of officer or person subject to tax: ROBERT W. BENNAR SECRETARY/TREASURER

Part I Type of Return and Return Information (Whole Dollars Only)

Check the box for the return for which you are using this Form 8879-EO and enter the applicable amount, if any, from the return. If you check the box on line **1a, 2a, 3a, 4a, 5a, 6a,** or **7a** below, and the amount on that line for the return being filed with this form was blank, then leave line **1b, 2b, 3b, 4b, 5b, 6b,** or **7b,** whichever is applicable, blank (do not enter -0-). But, if you entered -0- on the return, then enter -0- on the applicable line below. **Do not** complete more than one line in Part I.

1a Form 990 check here ▶	[X]	**b** Total revenue, if any (Form 990, Part VIII, column (A), line 12)	**1b**	1,452,930
2a Form 990-EZ check here ▶	[ ]	**b** Total revenue, if any (Form 990-EZ, line 9)	**2b**	
3a Form 1120-POL check here ▶	[ ]	**b** Total tax (Form 1120-POL, line 22)	**3b**	
4a Form 990-PF check here ▶	[ ]	**b** Tax based on investment income (Form 990-PF, Part VI, line 5)	**4b**	
5a Form 8868 check here ▶	[ ]	**b** Balance due (Form 8868, line 3c)	**5b**	
6a Form 990-T check here ▶	[ ]	**b** Total tax (Form 990-T, Part III, line 4)	**6b**	
7a Form 4720 check here ▶	[ ]	**b** Total tax (Form 4720, Part III, line 1)	**7b**	

Part II Declaration and Signature Authorization of Officer or Person Subject to Tax

Under penalties of perjury, I declare that [X] I am an officer of the above organization or [ ] I am a person subject to tax with respect to (name of organization) _____, (EIN) _____ and that I have examined a copy of the 2020 electronic return and accompanying schedules and statements, and, to the best of my knowledge and belief, they are true, correct, and complete. I further declare that the amount in Part I above is the amount shown on the copy of the electronic return. I consent to allow my intermediate service provider, transmitter, or electronic return originator (ERO) to send the return to the IRS and to receive from the IRS **(a)** an acknowledgement of receipt or reason for rejection of the transmission, **(b)** the reason for any delay in processing the return or refund, and **(c)** the date of any refund. If applicable, I authorize the U.S. Treasury and its designated Financial Agent to initiate an electronic funds withdrawal (direct debit) entry to the financial institution account indicated in the tax preparation software for payment of the federal taxes owed on this return, and the financial institution to debit the entry to this account. To revoke a payment, I must contact the U.S. Treasury Financial Agent at 1-888-353-4537 no later than 2 business days prior to the payment (settlement) date. I also authorize the financial institutions involved in the processing of the electronic payment of taxes to receive confidential information necessary to answer inquiries and resolve issues related to the payment. I have selected a personal identification number (PIN) as my signature for the electronic return and, if applicable, the consent to electronic funds withdrawal.

PIN: check one box only

[X] I authorize STEELE & ASSOCIATES, LLC to enter my PIN 98657 as my signature

ERO firm name

Enter five numbers, but do not enter all zeros

on the tax year 2020 electronically filed return. If I have indicated within this return that a copy of the return is being filed with a state agency(ies) regulating charities as part of the IRS Fed/State program, I also authorize the aforementioned ERO to enter my PIN on the return's disclosure consent screen.

[ ] As an officer or person subject to tax with respect to the organization, I will enter my PIN as my signature on the tax year 2020 electronically filed return. If I have indicated within this return that a copy of the return is being filed with a state agency(ies) regulating charities as part of the IRS Fed/State program, I will enter my PIN on the return's disclosure consent screen.

Signature of officer or person subject to tax ▶ Date ▶ 08/12/21

Part III Certification and Authentication

ERO's EFIN/PIN. Enter your six-digit electronic filing identification number (EFIN) followed by your five-digit self-selected PIN.

88200912345

Do not enter all zeros

I certify that the above numeric entry is my PIN, which is my signature on the 2020 electronically filed return indicated above. I confirm that I am submitting this return in accordance with the requirements of **Pub. 4163,** Modernized e-File (MeF) Information for Authorized IRS *e-file* Providers for Business Returns.

ERO's signature ▶ JONATHAN S. STEELE, CPA, CGMA Date ▶ 08/12/21

ERO Must Retain This Form — See Instructions
Do Not Submit This Form to the IRS Unless Requested To Do So

For Paperwork Reduction Act Notice, see back of form. Form **8879-EO** (2020)

DAA

Form **990**

Department of the Treasury
Internal Revenue Service

Return of Organization Exempt From Income Tax

Under section 501(c), 527, or 4947(a)(1) of the Internal Revenue Code (except private foundations)

▶ Do not enter social security numbers on this form as it may be made public.

▶ Go to *www.irs.gov/Form990* for instructions and the latest information.

OMB No. 1545-0047

2020

Open to Public Inspection

A For the 2020 calendar year, or tax year beginning 04/01/20 , and ending 03/31/21

B Check if applicable:
- ☐ Address change
- ☐ Name change
- ☐ Initial return
- ☐ Final return/ terminated
- ☐ Amended return
- ☐ Application pending

C Name of organization: NORTHERN NEVADA BUILDING & CONSTRUC TRADES COUNCIL DEVELOPMENT CORP

Doing business as: CARVILLE PARK APARTMENTS

Number and street (or P.O. box if mail is not delivered to street address): 1819 HYMER AVENUE #106

Room/suite:

City or town, state or province, country, and ZIP or foreign postal code: SPARKS NV 89431

D Employer identification number: 88-0176297

E Telephone number: 775-355-9200

G Gross receipts$ 1,452,930

F Name and address of principal officer:
RUSS JAMES
1819 HYMER AVE STE 106
SPARKS NV 89431

H(a) Is this a group return for subordinates? ☐ Yes ☒ No

H(b) Are all subordinates included? ☐ Yes ☐ No

If "No," attach a list. See instructions

I Tax-exempt status: ☒ 501(c)(3) ☐ 501(c) ( ) ◀ (insert no.) ☐ 4947(a)(1) or ☐ 527

J Website: ▶ N/A

H(c) Group exemption number ▶

K Form of organization: ☒ Corporation ☐ Trust ☐ Association ☐ Other ▶

L Year of formation: 1979

M State of legal domicile: NV

Part I Summary

1 Briefly describe the organization's mission or most significant activities:
TO PROVIDE AFFORDABLE HOUSING FOR LOW-INCOME, ELDERLY, AND DISABLED PERSONS IN A 208 UNIT APARTMENT COMPLEX.

2 Check this box ▶ ☐ if the organization discontinued its operations or disposed of more than 25% of its net assets.

3 Number of voting members of the governing body (Part VI, line 1a)	3	8
4 Number of independent voting members of the governing body (Part VI, line 1b)	4	8
5 Total number of individuals employed in calendar year 2020 (Part V, line 2a)	5	11
6 Total number of volunteers (estimate if necessary)	6	8
7a Total unrelated business revenue from Part VIII, column (C), line 12	7a	0
b Net unrelated business taxable income from Form 990-T, Part I, line 11	7b	0

	Prior Year	Current Year
8 Contributions and grants (Part VIII, line 1h)	990,862	1,003,911
9 Program service revenue (Part VIII, line 2g)	388,310	448,401
10 Investment income (Part VIII, column (A), lines 3, 4, and 7d)	798	618
11 Other revenue (Part VIII, column (A), lines 5, 6d, 8c, 9c, 10c, and 11e)		0
12 Total revenue – add lines 8 through 11 (must equal Part VIII, column (A), line 12)	1,379,970	1,452,930
13 Grants and similar amounts paid (Part IX, column (A), lines 1–3)		0
14 Benefits paid to or for members (Part IX, column (A), line 4)		0
15 Salaries, other compensation, employee benefits (Part IX, column (A), lines 5–10)	357,033	376,825
16a Professional fundraising fees (Part IX, column (A), line 11e)		0
b Total fundraising expenses (Part IX, column (D), line 25) ▶ 0		
17 Other expenses (Part IX, column (A), lines 11a–11d, 11f–24e)	945,073	827,936
18 Total expenses. Add lines 13–17 (must equal Part IX, column (A), line 25)	1,302,106	1,204,761
19 Revenue less expenses. Subtract line 18 from line 12	77,864	248,169

	Beginning of Current Year	End of Year
20 Total assets (Part X, line 16)	1,309,491	1,506,210
21 Total liabilities (Part X, line 26)	102,786	51,336
22 Net assets or fund balances. Subtract line 21 from line 20	1,206,705	1,454,874

Part II Signature Block

Under penalties of perjury, I declare that I have examined this return, including accompanying schedules and statements, and to the best of my knowledge and belief, it is true, correct, and complete. Declaration of preparer (other than officer) is based on all information of which preparer has any knowledge.

Sign Here

▶ Signature of officer — Date

▶ ROBERT W. BENNAR SECRETARY/TREASURER
Type or print name and title

Paid Preparer Use Only

Print/Type preparer's name	Preparer's signature	Date	Check ☐ if self-employed	PTIN
JONATHAN S. STEELE, CPA, CGMA	JONATHAN S. STEELE, CPA, CGMA	08/11/22		P01362786

Firm's name ▶ STEELE & ASSOCIATES, LLC — Firm's EIN ▶ 88-0479248

Firm's address ▶ 611 N NEVADA ST CARSON CITY, NV 89703-3968 — Phone no. 775-882-7198

May the IRS discuss this return with the preparer shown above? See instructions ☒ Yes ☐ No

For Paperwork Reduction Act Notice, see the separate instructions. Form **990** (2020)

DAA

Part III **Statement of Program Service Accomplishments**

Check if Schedule O contains a response or note to any line in this Part III ☐

1 Briefly describe the organization's mission:

TO PROVIDE AFFORDABLE HOUSING FOR LOW-INCOME, ELDERLY, AND DISABLED PERSONS IN A 208 UNIT APARTMENT COMPLEX.

2 Did the organization undertake any significant program services during the year which were not listed on the prior Form 990 or 990-EZ? ☐ Yes ☒ No

If "Yes," describe these new services on Schedule O.

3 Did the organization cease conducting, or make significant changes in how it conducts, any program services? ☐ Yes ☒ No

If "Yes," describe these changes on Schedule O.

4 Describe the organization's program service accomplishments for each of its three largest program services, as measured by expenses. Section 501(c)(3) and 501(c)(4) organizations are required to report the amount of grants and allocations to others, the total expenses, and revenue, if any, for each program service reported.

4a (Code:) (Expenses $ 1,066,452 including grants of$) (Revenue $ 449,019)

PROVIDED AFFORDABLE HOUSING FOR LOW-INCOME, ELDERLY, AND DISABLED PERSONS IN A 208 UNIT APARTMENT COMPLEX.

4b (Code:) (Expenses $ including grants of$) (Revenue $)

N/A

4c (Code:) (Expenses $ including grants of$) (Revenue $)

N/A

4d Other program services (Describe on Schedule O.)
(Expenses $ including grants of$) (Revenue $)

4e Total program service expenses ▶ 1,066,452

Part IV Checklist of Required Schedules

			Yes	No
1	Is the organization described in section 501(c)(3) or 4947(a)(1) (other than a private foundation)? *If "Yes," complete Schedule A*	1	X	
2	Is the organization required to complete *Schedule B, Schedule of Contributors* (see instructions)?	2		X
3	Did the organization engage in direct or indirect political campaign activities on behalf of or in opposition to candidates for public office? *If "Yes," complete Schedule C, Part I*	3		X
4	**Section 501(c)(3) organizations.** Did the organization engage in lobbying activities, or have a section 501(h) election in effect during the tax year? *If "Yes," complete Schedule C, Part II*	4		X
5	Is the organization a section 501(c)(4), 501(c)(5), or 501(c)(6) organization that receives membership dues, assessments, or similar amounts as defined in Revenue Procedure 98-19? *If "Yes," complete Schedule C, Part III*	5		X
6	Did the organization maintain any donor advised funds or any similar funds or accounts for which donors have the right to provide advice on the distribution or investment of amounts in such funds or accounts? *If "Yes," complete Schedule D, Part I*	6		X
7	Did the organization receive or hold a conservation easement, including easements to preserve open space, the environment, historic land areas, or historic structures? *If "Yes," complete Schedule D, Part II*	7		X
8	Did the organization maintain collections of works of art, historical treasures, or other similar assets? *If "Yes," complete Schedule D, Part III*	8		X
9	Did the organization report an amount in Part X, line 21, for escrow or custodial account liability, serve as a custodian for amounts not listed in Part X; or provide credit counseling, debt management, credit repair, or debt negotiation services? *If "Yes," complete Schedule D, Part IV*	9		X
10	Did the organization, directly or through a related organization, hold assets in donor-restricted endowments or in quasi endowments? *If "Yes," complete Schedule D, Part V*	10		X
11	If the organization's answer to any of the following questions is "Yes," then complete Schedule D, Parts VI, VII, VIII, IX, or X as applicable.			
a	Did the organization report an amount for land, buildings, and equipment in Part X, line 10? *If "Yes," complete Schedule D, Part VI*	11a	X	
b	Did the organization report an amount for investments—other securities in Part X, line 12, that is 5% or more of its total assets reported in Part X, line 16? *If "Yes," complete Schedule D, Part VII*	11b		X
c	Did the organization report an amount for investments—program related in Part X, line 13, that is 5% or more of its total assets reported in Part X, line 16? *If "Yes," complete Schedule D, Part VIII*	11c		X
d	Did the organization report an amount for other assets in Part X, line 15, that is 5% or more of its total assets reported in Part X, line 16? *If "Yes," complete Schedule D, Part IX*	11d		X
e	Did the organization report an amount for other liabilities in Part X, line 25? *If "Yes," complete Schedule D, Part X*	11e	X	
f	Did the organization's separate or consolidated financial statements for the tax year include a footnote that addresses the organization's liability for uncertain tax positions under FIN 48 (ASC 740)? *If "Yes," complete Schedule D, Part X*	11f	X	
12a	Did the organization obtain separate, independent audited financial statements for the tax year? *If "Yes," complete Schedule D, Parts XI and XII*	12a	X	
b	Was the organization included in consolidated, independent audited financial statements for the tax year? *If "Yes," and if the organization answered "No" to line 12a, then completing Schedule D, Parts XI and XII is optional*	12b		X
13	Is the organization a school described in section 170(b)(1)(A)(ii)? *If "Yes," complete Schedule E*	13		X
14a	Did the organization maintain an office, employees, or agents outside of the United States?	14a		X
b	Did the organization have aggregate revenues or expenses of more than $10,000 from grantmaking, fundraising, business, investment, and program service activities outside the United States, or aggregate foreign investments valued at $100,000 or more? *If "Yes," complete Schedule F, Parts I and IV*	14b		X
15	Did the organization report on Part IX, column (A), line 3, more than $5,000 of grants or other assistance to or for any foreign organization? *If "Yes," complete Schedule F, Parts II and IV*	15		X
16	Did the organization report on Part IX, column (A), line 3, more than $5,000 of aggregate grants or other assistance to or for foreign individuals? *If "Yes," complete Schedule F, Parts III and IV*	16		X
17	Did the organization report a total of more than $15,000 of expenses for professional fundraising services on Part IX, column (A), lines 6 and 11e? *If "Yes," complete Schedule G, Part I* See instructions	17		X
18	Did the organization report more than $15,000 total of fundraising event gross income and contributions on Part VIII, lines 1c and 8a? *If "Yes," complete Schedule G, Part II*	18		X
19	Did the organization report more than $15,000 of gross income from gaming activities on Part VIII, line 9a? *If "Yes," complete Schedule G, Part III*	19		X
20a	Did the organization operate one or more hospital facilities? *If "Yes," complete Schedule H*	20a		X
b	If "Yes" to line 20a, did the organization attach a copy of its audited financial statements to this return?	20b		
21	Did the organization report more than $5,000 of grants or other assistance to any domestic organization or domestic government on Part IX, column (A), line 1? *If "Yes," complete Schedule I, Parts I and II*	21		X

Part IV Checklist of Required Schedules *(continued)*

			Yes	No
22	Did the organization report more than $5,000 of grants or other assistance to or for domestic individuals on Part IX, column (A), line 2? *If "Yes," complete Schedule I, Parts I and III*	22		X
23	Did the organization answer "Yes" to Part VII, Section A, line 3, 4, or 5 about compensation of the organization's current and former officers, directors, trustees, key employees, and highest compensated employees? *If "Yes," complete Schedule J*	23		X
24a	Did the organization have a tax-exempt bond issue with an outstanding principal amount of more than $100,000 as of the last day of the year, that was issued after December 31, 2002? *If "Yes," answer lines 24b through 24d and complete Schedule K. If "No," go to line 25a*	24a		X
b	Did the organization invest any proceeds of tax-exempt bonds beyond a temporary period exception?	24b		
c	Did the organization maintain an escrow account other than a refunding escrow at any time during the year to defease any tax-exempt bonds?	24c		
d	Did the organization act as an "on behalf of" issuer for bonds outstanding at any time during the year?	24d		
25a	**Section 501(c)(3), 501(c)(4), and 501(c)(29) organizations.** Did the organization engage in an excess benefit transaction with a disqualified person during the year? *If "Yes," complete Schedule L, Part I*	25a		X
b	Is the organization aware that it engaged in an excess benefit transaction with a disqualified person in a prior year, and that the transaction has not been reported on any of the organization's prior Forms 990 or 990-EZ? *If "Yes," complete Schedule L, Part I*	25b		X
26	Did the organization report any amount on Part X, line 5 or 22, for receivables from or payables to any current or former officer, director, trustee, key employee, creator or founder, substantial contributor, or 35% controlled entity or family member of any of these persons? *If "Yes," complete Schedule L, Part II*	26		X
27	Did the organization provide a grant or other assistance to any current or former officer, director, trustee, key employee, creator or founder, substantial contributor or employee thereof, a grant selection committee member, or to a 35% controlled entity (including an employee thereof) or family member of any of these persons? *If "Yes," complete Schedule L, Part III*	27		X
28	Was the organization a party to a business transaction with one of the following parties (see Schedule L, Part IV instructions, for applicable filing thresholds, conditions, and exceptions):			
a	A current or former officer, director, trustee, key employee, creator or founder, or substantial contributor? *If "Yes," complete Schedule L, Part IV*	28a		X
b	A family member of any individual described in line 28a? *If "Yes," complete Schedule L, Part IV*	28b		X
c	A 35% controlled entity of one or more individuals and/or organizations described in lines 28a or 28b? *If "Yes," complete Schedule L, Part IV*	28c	X	
29	Did the organization receive more than $25,000 in non-cash contributions? *If "Yes," complete Schedule M*	29		X
30	Did the organization receive contributions of art, historical treasures, or other similar assets, or qualified conservation contributions? *If "Yes," complete Schedule M*	30		X
31	Did the organization liquidate, terminate, or dissolve and cease operations? *If "Yes," complete Schedule N, Part I*	31		X
32	Did the organization sell, exchange, dispose of, or transfer more than 25% of its net assets? *If "Yes," complete Schedule N, Part II*	32		X
33	Did the organization own 100% of an entity disregarded as separate from the organization under Regulations sections 301.7701-2 and 301.7701-3? *If "Yes," complete Schedule R, Part I*	33		X
34	Was the organization related to any tax-exempt or taxable entity? *If "Yes," complete Schedule R, Part II, III, or IV, and Part V, line 1*	34		X
35a	Did the organization have a controlled entity within the meaning of section 512(b)(13)?	35a		X
b	If "Yes" to line 35a, did the organization receive any payment from or engage in any transaction with a controlled entity within the meaning of section 512(b)(13)? *If "Yes," complete Schedule R, Part V, line 2*	35b		
36	**Section 501(c)(3) organizations.** Did the organization make any transfers to an exempt non-charitable related organization? *If "Yes," complete Schedule R, Part V, line 2*	36		X
37	Did the organization conduct more than 5% of its activities through an entity that is not a related organization and that is treated as a partnership for federal income tax purposes? *If "Yes," complete Schedule R, Part VI*	37		X
38	Did the organization complete Schedule O and provide explanations in Schedule O for Part VI, lines 11b and 19? **Note:** All Form 990 filers are required to complete Schedule O.	38	X	

Part V Statements Regarding Other IRS Filings and Tax Compliance

Check if Schedule O contains a response or note to any line in this Part V ☐

				Yes	No
1a	Enter the number reported in Box 3 of Form 1096. Enter -0- if not applicable	1a	3		
b	Enter the number of Forms W-2G included in line 1a. Enter -0- if not applicable	1b	0		
c	Did the organization comply with backup withholding rules for reportable payments to vendors and reportable gaming (gambling) winnings to prize winners?	1c			

Part V Statements Regarding Other IRS Filings and Tax Compliance *(continued)*

			Yes	No
2a	Enter the number of employees reported on Form W-3, Transmittal of Wage and Tax Statements, filed for the calendar year ending with or within the year covered by this return	2a 11		
b	If at least one is reported on line 2a, did the organization file all required federal employment tax returns?	2b	X	
	Note: If the sum of lines 1a and 2a is greater than 250, you may be required to *e-file* (see instructions)			
3a	Did the organization have unrelated business gross income of $1,000 or more during the year?	3a		X
b	If "Yes," has it filed a Form 990-T for this year? *If "No" to line 3b, provide an explanation on Schedule O*	3b		
4a	At any time during the calendar year, did the organization have an interest in, or a signature or other authority over, a financial account in a foreign country (such as a bank account, securities account, or other financial account)?	4a		X
b	If "Yes," enter the name of the foreign country ▶			
	See instructions for filing requirements for FinCEN Form 114, Report of Foreign Bank and Financial Accounts (FBAR).			
5a	Was the organization a party to a prohibited tax shelter transaction at any time during the tax year?	5a		X
b	Did any taxable party notify the organization that it was or is a party to a prohibited tax shelter transaction?	5b		X
c	If "Yes" to line 5a or 5b, did the organization file Form 8886-T?	5c		
6a	Does the organization have annual gross receipts that are normally greater than $100,000, and did the organization solicit any contributions that were not tax deductible as charitable contributions?	6a		X
b	If "Yes," did the organization include with every solicitation an express statement that such contributions or gifts were not tax deductible?	6b		
7	**Organizations that may receive deductible contributions under section 170(c).**			
a	Did the organization receive a payment in excess of $75 made partly as a contribution and partly for goods and services provided to the payor?	7a		
b	If "Yes," did the organization notify the donor of the value of the goods or services provided?	7b		
c	Did the organization sell, exchange, or otherwise dispose of tangible personal property for which it was required to file Form 8282?	7c		
d	If "Yes," indicate the number of Forms 8282 filed during the year 7d			
e	Did the organization receive any funds, directly or indirectly, to pay premiums on a personal benefit contract?	7e		
f	Did the organization, during the year, pay premiums, directly or indirectly, on a personal benefit contract?	7f		
g	If the organization received a contribution of qualified intellectual property, did the organization file Form 8899 as required?	7g		
h	If the organization received a contribution of cars, boats, airplanes, or other vehicles, did the organization file a Form 1098-C?	7h		
8	**Sponsoring organizations maintaining donor advised funds.** Did a donor advised fund maintained by the sponsoring organization have excess business holdings at any time during the year?	8		
9	**Sponsoring organizations maintaining donor advised funds.**			
a	Did the sponsoring organization make any taxable distributions under section 4966?	9a		
b	Did the sponsoring organization make a distribution to a donor, donor advisor, or related person?	9b		
10	**Section 501(c)(7) organizations.** Enter:			
a	Initiation fees and capital contributions included on Part VIII, line 12 10a			
b	Gross receipts, included on Form 990, Part VIII, line 12, for public use of club facilities 10b			
11	**Section 501(c)(12) organizations.** Enter:			
a	Gross income from members or shareholders 11a			
b	Gross income from other sources (Do not net amounts due or paid to other sources against amounts due or received from them.) 11b			
12a	**Section 4947(a)(1) non-exempt charitable trusts.** Is the organization filing Form 990 in lieu of Form 1041?	12a		
b	If "Yes," enter the amount of tax-exempt interest received or accrued during the year 12b			
13	**Section 501(c)(29) qualified nonprofit health insurance issuers.**			
a	Is the organization licensed to issue qualified health plans in more than one state?	13a		
	Note: See the instructions for additional information the organization must report on Schedule O.			
b	Enter the amount of reserves the organization is required to maintain by the states in which the organization is licensed to issue qualified health plans 13b			
c	Enter the amount of reserves on hand 13c			
14a	Did the organization receive any payments for indoor tanning services during the tax year?	14a		X
b	If "Yes," has it filed a Form 720 to report these payments? *If "No," provide an explanation on Schedule O*	14b		
15	Is the organization subject to the section 4960 tax on payment(s) of more than $1,000,000 in remuneration or excess parachute payment(s) during the year? If "Yes," see instructions and file Form 4720, Schedule N.	15		X
16	Is the organization an educational institution subject to the section 4968 excise tax on net investment income? If "Yes," complete Form 4720, Schedule O.	16		X

Part VI **Governance, Management, and Disclosure** *For each "Yes" response to lines 2 through 7b below, and for a "No" response to line 8a, 8b, or 10b below, describe the circumstances, processes, or changes on Schedule O. See instructions.*

Check if Schedule O contains a response or note to any line in this Part VI ..... [X]

Section A. Governing Body and Management

				Yes	No
1a	Enter the number of voting members of the governing body at the end of the tax year	1a	8		
	If there are material differences in voting rights among members of the governing body, or if the governing body delegated broad authority to an executive committee or similar committee, explain on Schedule O.				
b	Enter the number of voting members included on line 1a, above, who are independent	1b	8		
2	Did any officer, director, trustee, or key employee have a family relationship or a business relationship with any other officer, director, trustee, or key employee?	2			X
3	Did the organization delegate control over management duties customarily performed by or under the direct supervision of officers, directors, trustees, or key employees to a management company or other person?	3			X
4	Did the organization make any significant changes to its governing documents since the prior Form 990 was filed?	4			X
5	Did the organization become aware during the year of a significant diversion of the organization's assets?	5			X
6	Did the organization have members or stockholders?	6			X
7a	Did the organization have members, stockholders, or other persons who had the power to elect or appoint one or more members of the governing body?	7a			X
b	Are any governance decisions of the organization reserved to (or subject to approval by) members, stockholders, or persons other than the governing body?	7b			X
8	Did the organization contemporaneously document the meetings held or written actions undertaken during the year by the following:				
a	The governing body?	8a		X	
b	Each committee with authority to act on behalf of the governing body?	8b		X	
9	Is there any officer, director, trustee, or key employee listed in Part VII, Section A, who cannot be reached at the organization's mailing address? *If "Yes," provide the names and addresses on Schedule O*	9			X

Section B. Policies *(This Section B requests information about policies not required by the Internal Revenue Code.)*

			Yes	No
10a	Did the organization have local chapters, branches, or affiliates?	10a		X
b	If "Yes," did the organization have written policies and procedures governing the activities of such chapters, affiliates, and branches to ensure their operations are consistent with the organization's exempt purposes?	10b		
11a	Has the organization provided a complete copy of this Form 990 to all members of its governing body before filing the form?	11a		X
b	Describe in Schedule O the process, if any, used by the organization to review this Form 990.			
12a	Did the organization have a written conflict of interest policy? *If "No," go to line 13*	12a		X
b	Were officers, directors, or trustees, and key employees required to disclose annually interests that could give rise to conflicts?	12b		
c	Did the organization regularly and consistently monitor and enforce compliance with the policy? *If "Yes," describe in Schedule O how this was done*	12c		
13	Did the organization have a written whistleblower policy?	13		X
14	Did the organization have a written document retention and destruction policy?	14	X	
15	Did the process for determining compensation of the following persons include a review and approval by independent persons, comparability data, and contemporaneous substantiation of the deliberation and decision?			
a	The organization's CEO, Executive Director, or top management official	15a		X
b	Other officers or key employees of the organization	15b	X	
	If "Yes" to line 15a or 15b, describe the process in Schedule O (see instructions).			
16a	Did the organization invest in, contribute assets to, or participate in a joint venture or similar arrangement with a taxable entity during the year?	16a		X
b	If "Yes," did the organization follow a written policy or procedure requiring the organization to evaluate its participation in joint venture arrangements under applicable federal tax law, and take steps to safeguard the organization's exempt status with respect to such arrangements?	16b		

Section C. Disclosure

17 List the states with which a copy of this Form 990 is required to be filed ▶ NONE

18 Section 6104 requires an organization to make its Forms 1023 (1024 or 1024-A, if applicable), 990, and 990-T (Section 501(c)(3)s only) available for public inspection. Indicate how you made these available. Check all that apply.

☐ Own website ☐ Another's website ☒ Upon request ☐ Other *(explain on Schedule O)*

19 Describe on Schedule O whether (and if so, how) the organization made its governing documents, conflict of interest policy, and financial statements available to the public during the tax year.

20 State the name, address, and telephone number of the person who possesses the organization's books and records ▶

NO. NEVADA BUILDING & CONSTRUCTION 1819 HYMER AVENUE, SUITE 106
SPARKS NV 89431 775-355-9200

Part VII Compensation of Officers, Directors, Trustees, Key Employees, Highest Compensated Employees, and Independent Contractors

Check if Schedule O contains a response or note to any line in this Part VII ☐

Section A. Officers, Directors, Trustees, Key Employees, and Highest Compensated Employees

1a Complete this table for all persons required to be listed. Report compensation for the calendar year ending with or within the organization's tax year.

- List all of the organization's **current** officers, directors, trustees (whether individuals or organizations), regardless of amount of compensation. Enter -0- in columns (D), (E), and (F) if no compensation was paid.
- List all of the organization's **current** key employees, if any. See instructions for definition of "key employee."
- List the organization's five **current** highest compensated employees (other than an officer, director, trustee, or key employee) who received reportable compensation (Box 5 of Form W-2 and/or Box 7 of Form 1099-MISC) of more than $100,000 from the organization and any related organizations.
- List all of the organization's **former** officers, key employees, and highest compensated employees who received more than $100,000 of reportable compensation from the organization and any related organizations.
- List all of the organization's **former directors or trustees** that received, in the capacity as a former director or trustee of the organization, more than $10,000 of reportable compensation from the organization and any related organizations.

See instructions for the order in which to list the persons above.

☒ Check this box if neither the organization nor any related organization compensated any current officer, director, or trustee.

(A) Name and title	(B) Average hours per week (list any hours for related organizations below dotted line)	(C) Position (do not check more than one box, unless person is both an officer and a director/trustee)						(D) Reportable compensation from the organization (W-2/1099-MISC)	(E) Reportable compensation from related organizations (W-2/1099-MISC)	(F) Estimated amount of other compensation from the organization and related organizations
		Individual trustee or director	Institutional trustee	Officer	Key employee	Highest compensated employee	Former			
(1) ROBERT W. BENNAR	0.00									
SECRETARY/TREASURER	0.00	X		X				0	0	0
(2) SCOTT FULLERTON	0.25									
BOARD MEMBER	0.00	X						0	0	0
(3) JACOB HAAS	0.25									
BOARD MEMBER	0.00	X						0	0	0
(4) TRACY HOLLAND	0.25									
VICE PRESIDENT	0.00	X		X				0	0	0
(5) RUSS JAMES	0.25									
PRESIDENT	0.00	X		X				0	0	0
(6) ELOY JARA	0.25									
BOARD MEMBER	0.00	X						0	0	0
(7) CHRIS ROBINSON	0.25									
BOARD MEMBER	0.00	X						0	0	0
(8) GARY WATSON	0.25									
BOARD MEMBER	0.00	X						0	0	0
(9)										
(10)										
(11)										

Part VII Section A. Officers, Directors, Trustees, Key Employees, and Highest Compensated Employees *(continued)*

(A) Name and title	(B) Average hours per week (list any hours for related organizations below dotted line)	(C) Position (do not check more than one box, unless person is both an officer and a director/trustee)						(D) Reportable compensation from the organization (W-2/1099-MISC)	(E) Reportable compensation from related organizations (W-2/1099-MISC)	(F) Estimated amount of other compensation from the organization and related organizations
		Individual trustee or director	Institutional trustee	Officer	Key employee	Highest compensated employee	Former			
1b Subtotal ▶										
c Total from continuation sheets to Part VII, Section A ▶										
d Total (add lines 1b and 1c) ▶										

2 Total number of individuals (including but not limited to those listed above) who received more than $100,000 of reportable compensation from the organization ▶0

		Yes	No
3	Did the organization list any **former** officer, director, trustee, key employee, or highest compensated employee on line 1a? *If "Yes," complete Schedule J for such individual*		X
4	For any individual listed on line 1a, is the sum of reportable compensation and other compensation from the organization and related organizations greater than $150,000? *If "Yes," complete Schedule J for such individual*		X
5	Did any person listed on line 1a receive or accrue compensation from any unrelated organization or individual for services rendered to the organization? *If "Yes," complete Schedule J for such person*		X

Section B. Independent Contractors

1 Complete this table for your five highest compensated independent contractors that received more than $100,000 of compensation from the organization. Report compensation for the calendar year ending with or within the organization's tax year.

(A) Name and business address	(B) Description of services	(C) Compensation

2 Total number of independent contractors (including but not limited to those listed above) who received more than $100,000 of compensation from the organization ▶ 0

Part VIII Statement of Revenue

Check if Schedule O contains a response or note to any line in this Part VIII ☐

				(A) Total revenue	(B) Related or exempt function revenue	(C) Unrelated business revenue	(D) Revenue excluded from tax under sections 512-514
Contributions, Gifts, Grants and Other Similar Amounts	1a Federated campaigns	1a					
	b Membership dues	1b					
	c Fundraising events	1c					
	d Related organizations	1d					
	e Government grants (contributions)	1e	1,003,911				
	f All other contributions, gifts, grants, and similar amounts not included above	1f					
	g Noncash contributions included in lines 1a-1f	1g	$				
	h **Total.** Add lines 1a–1f			1,003,911			
			Business Code				
Program Service Revenue	2a RENT INCOME - TENANTS		531110	486,825	486,825		
	b OTHER INCOME		531110	27,480	27,480		
	c TENANT CHARGES		531110	11,762	11,762		
	d LAUNDRY INCOME		531110	4,474	4,474		
	e DAMAGES		531110	2,567	2,567		
	f All other program service revenue		531110	-84,707	-84,707		
	g **Total.** Add lines 2a–2f			448,401			
Other Revenue	3 Investment income (including dividends, interest, and other similar amounts)			618	618		
	4 Income from investment of tax-exempt bond proceeds						
	5 Royalties						
			(i) Real	(ii) Personal			
	6a Gross rents	6a					
	b Less: rental expenses	6b					
	c Rental inc. or (loss)	6c					
	d Net rental income or (loss)						
			(i) Securities	(ii) Other			
	7a Gross amount from sales of assets other than inventory	7a					
	b Less: cost or other basis and sales exps.	7b					
	c Gain or (loss)	7c					
	d Net gain or (loss)						
	8a Gross income from fundraising events (not including $ ..... of contributions reported on line 1c). See Part IV, line 18	8a					
	b Less: direct expenses	8b					
	c Net income or (loss) from fundraising events						
	9a Gross income from gaming activities. See Part IV, line 19	9a					
	b Less: direct expenses	9b					
	c Net income or (loss) from gaming activities						
	10a Gross sales of inventory, less returns and allowances	10a					
	b Less: cost of goods sold	10b					
	c Net income or (loss) from sales of inventory						
			Business Code				
Miscellaneous Revenue	11a						
	b						
	c						
	d All other revenue						
	e **Total.** Add lines 11a–11d						
	12 **Total revenue.** See instructions			1,452,930	449,019	0	0

Form **990** (2020)

DAA

Part IX Statement of Functional Expenses

Section 501(c)(3) and 501(c)(4) organizations must complete all columns. All other organizations must complete column (A).

Check if Schedule O contains a response or note to any line in this Part IX ☐

Do not include amounts reported on lines 6b, 7b, 8b, 9b, and 10b of Part VIII.	(A) Total expenses	(B) Program service expenses	(C) Management and general expenses	(D) Fundraising expenses
1 Grants and other assistance to domestic organizations and domestic governments. See Part IV, line 21				
2 Grants and other assistance to domestic individuals. See Part IV, line 22				
3 Grants and other assistance to foreign organizations, foreign governments, and foreign individuals. See Part IV, lines 15 and 16				
4 Benefits paid to or for members				
5 Compensation of current officers, directors, trustees, and key employees				
6 Compensation not included above to disqualified persons (as defined under section 4958(f)(1)) and persons described in section 4958(c)(3)(B)				
7 Other salaries and wages	282,784	217,855	64,929	
8 Pension plan accruals and contributions (include section 401(k) and 403(b) employer contributions)	26,152	26,152		
9 Other employee benefits	43,425	43,425		
10 Payroll taxes	24,464	24,464		
11 Fees for services (nonemployees):				
a Management	117,312	117,312		
b Legal				
c Accounting	22,680	12,480	10,200	
d Lobbying				
e Professional fundraising services. See Part IV, line 17				
f Investment management fees				
g Other. (If line 11g amount exceeds 10% of line 25, column (A) amount, list line 11g expenses on Schedule O.)				
12 Advertising and promotion	1,209	1,209		
13 Office expenses	35,174	35,174		
14 Information technology				
15 Royalties				
16 Occupancy	546,639	492,805	53,834	
17 Travel	176		176	
18 Payments of travel or entertainment expenses for any federal, state, or local public officials				
19 Conferences, conventions, and meetings				
20 Interest				
21 Payments to affiliates				
22 Depreciation, depletion, and amortization	91,549	91,549		
23 Insurance	4,027	4,027		
24 Other expenses. Itemize expenses not covered above (List miscellaneous expenses on line 24e. If line 24e amount exceeds 10% of line 25, column (A) amount, list line 24e expenses on Schedule O.)				
a CONTINUING EDUCATION	7,056		7,056	
b MISC TAXES, LICENSES & IN	2,114		2,114	
c				
d				
e All other expenses				
25 **Total functional expenses.** Add lines 1 through 24e	1,204,761	1,066,452	138,309	0
26 **Joint costs.** Complete this line only if the organization reported in column (B) joint costs from a combined educational campaign and fundraising solicitation. Check here ▶ ☐ if following SOP 98-2 (ASC 958-720)				

Part X Balance Sheet

Check if Schedule O contains a response or note to any line in this Part X ☐

				(A) Beginning of year		(B) End of year
Assets	1	Cash—non-interest-bearing		172,820	1	334,404
	2	Savings and temporary cash investments		61,900	2	69,661
	3	Pledges and grants receivable, net		6,000	3	4,023
	4	Accounts receivable, net			4	3,969
	5	Loans and other receivables from any current or former officer, director, trustee, key employee, creator or founder, substantial contributor, or 35% controlled entity or family member of any of these persons			5	
	6	Loans and other receivables from other disqualified persons (as defined under section 4958(f)(1)), and persons described in section 4958(c)(3)(B)			6	
	7	Notes and loans receivable, net		63,730	7	63,730
	8	Inventories for sale or use			8	
	9	Prepaid expenses and deferred charges		46,705	9	38,354
	10a	Land, buildings, and equipment: cost or other basis. Complete Part VI of Schedule D	10a 4,784,192			
	b	Less: accumulated depreciation	10b 3,839,683	927,842	10c	944,509
	11	Investments—publicly traded securities			11	
	12	Investments—other securities. See Part IV, line 11			12	
	13	Investments—program-related. See Part IV, line 11			13	
	14	Intangible assets			14	
	15	Other assets. See Part IV, line 11		30,494	15	47,560
	16	**Total assets.** Add lines 1 through 15 (must equal line 33)		1,309,491	16	1,506,210
Liabilities	17	Accounts payable and accrued expenses		56,852	17	12,504
	18	Grants payable			18	
	19	Deferred revenue		17,128	19	7,098
	20	Tax-exempt bond liabilities			20	
	21	Escrow or custodial account liability. Complete Part IV of Schedule D			21	
	22	Loans and other payables to any current or former officer, director, trustee, key employee, creator or founder, substantial contributor, or 35% controlled entity or family member of any of these persons			22	
	23	Secured mortgages and notes payable to unrelated third parties			23	
	24	Unsecured notes and loans payable to unrelated third parties			24	
	25	Other liabilities (including federal income tax, payables to related third parties, and other liabilities not included on lines 17-24). Complete Part X of Schedule D		28,806	25	31,734
	26	**Total liabilities.** Add lines 17 through 25		102,786	26	51,336
Net Assets or Fund Balances		**Organizations that follow FASB ASC 958, check here ☐ and complete lines 27, 28, 32, and 33.**				
	27	Net assets without donor restrictions			27	
	28	Net assets with donor restrictions			28	
		Organizations that do not follow FASB ASC 958, check here ▶ ☒ and complete lines 29 through 33.				
	29	Capital stock or trust principal, or current funds			29	
	30	Paid-in or capital surplus, or land, building, or equipment fund			30	
	31	Retained earnings, endowment, accumulated income, or other funds		1,206,705	31	1,454,874
	32	Total net assets or fund balances		1,206,705	32	1,454,874
	33	Total liabilities and net assets/fund balances		1,309,491	33	1,506,210

Form **990** (2020)

DAA

Part XI Reconciliation of Net Assets

Check if Schedule O contains a response or note to any line in this Part XI ☐

1	Total revenue (must equal Part VIII, column (A), line 12)	1	1,452,930
2	Total expenses (must equal Part IX, column (A), line 25)	2	1,204,761
3	Revenue less expenses. Subtract line 2 from line 1	3	248,169
4	Net assets or fund balances at beginning of year (must equal Part X, line 32, column (A))	4	1,206,705
5	Net unrealized gains (losses) on investments	5	
6	Donated services and use of facilities	6	
7	Investment expenses	7	
8	Prior period adjustments	8	
9	Other changes in net assets or fund balances (explain on Schedule O)	9	
10	Net assets or fund balances at end of year. Combine lines 3 through 9 (must equal Part X, line 32, column (B))	10	1,454,874

Part XII Financial Statements and Reporting

Check if Schedule O contains a response or note to any line in this Part XII ☐

			Yes	No
1	Accounting method used to prepare the Form 990: ☐ Cash ☒ Accrual ☐ Other _____ If the organization changed its method of accounting from a prior year or checked "Other," explain in Schedule O.			
2a	Were the organization's financial statements compiled or reviewed by an independent accountant? If "Yes," check a box below to indicate whether the financial statements for the year were compiled or reviewed on a separate basis, consolidated basis, or both: ☐ Separate basis ☐ Consolidated basis ☐ Both consolidated and separate basis	2a		X
b	Were the organization's financial statements audited by an independent accountant? If "Yes," check a box below to indicate whether the financial statements for the year were audited on a separate basis, consolidated basis, or both: ☐ Separate basis ☐ Consolidated basis ☐ Both consolidated and separate basis	2b	X	
c	If "Yes" to line 2a or 2b, does the organization have a committee that assumes responsibility for oversight of the audit, review, or compilation of its financial statements and selection of an independent accountant? If the organization changed either its oversight process or selection process during the tax year, explain on Schedule O.	2c	X	
3a	As a result of a federal award, was the organization required to undergo an audit or audits as set forth in the Single Audit Act and OMB Circular A-133?	3a		X
b	If "Yes," did the organization undergo the required audit or audits? If the organization did not undergo the required audit or audits, explain why on Schedule O and describe any steps taken to undergo such audits	3b		

SCHEDULE A
(Form 990 or 990-EZ)

Department of the Treasury
Internal Revenue Service

Public Charity Status and Public Support

Complete if the organization is a section 501(c)(3) organization or a section 4947(a)(1) nonexempt charitable trust.

▶ Attach to Form 990 or Form 990-EZ.

▶ Go to *www.irs.gov/Form990* for instructions and the latest information.

OMB No. 1545-0047

2020

Open to Public Inspection

Name of the organization	Employer identification number
NORTHERN NEVADA BUILDING & CONSTRUC TRADES COUNCIL DEVELOPMENT CORP	88-0176297

Part I Reason for Public Charity Status. (All organizations must complete this part.) See instructions.

The organization is not a private foundation because it is: (For lines 1 through 12, check only one box.)

1 ☐ A church, convention of churches, or association of churches described in **section 170(b)(1)(A)(i).**

2 ☐ A school described in **section 170(b)(1)(A)(ii).** (Attach Schedule E (Form 990 or 990-EZ).)

3 ☐ A hospital or a cooperative hospital service organization described in **section 170(b)(1)(A)(iii).**

4 ☐ A medical research organization operated in conjunction with a hospital described in **section 170(b)(1)(A)(iii).** Enter the hospital's name, city, and state: .....

5 ☐ An organization operated for the benefit of a college or university owned or operated by a governmental unit described in **section 170(b)(1)(A)(iv).** (Complete Part II.)

6 ☐ A federal, state, or local government or governmental unit described in **section 170(b)(1)(A)(v).**

7 ☒ An organization that normally receives a substantial part of its support from a governmental unit or from the general public described in **section 170(b)(1)(A)(vi).** (Complete Part II.)

8 ☐ A community trust described in **section 170(b)(1)(A)(vi).** (Complete Part II.)

9 ☐ An agricultural research organization described in **section 170(b)(1)(A)(ix)** operated in conjunction with a land-grant college or university or a non-land-grant college of agriculture (see instructions). Enter the name, city, and state of the college or university: .....

10 ☐ An organization that normally receives: (1) more than 33 1/3% of its support from contributions, membership fees, and gross receipts from activities related to its exempt functions, subject to certain exceptions; and (2) no more than 331/3% of its support from gross investment income and unrelated business taxable income (less section 511 tax) from businesses acquired by the organization after June 30, 1975. See **section 509(a)(2).** (Complete Part III.)

11 ☐ An organization organized and operated exclusively to test for public safety. See **section 509(a)(4).**

12 ☐ An organization organized and operated exclusively for the benefit of, to perform the functions of, or to carry out the purposes of one or more publicly supported organizations described in **section 509(a)(1)** or **section 509(a)(2).** See **section 509(a)(3).** Check the box in lines 12a through 12d that describes the type of supporting organization and complete lines 12e, 12f, and 12g.

a ☐ **Type I.** A supporting organization operated, supervised, or controlled by its supported organization(s), typically by giving the supported organization(s) the power to regularly appoint or elect a majority of the directors or trustees of the supporting organization. **You must complete Part IV, Sections A and B.**

b ☐ **Type II.** A supporting organization supervised or controlled in connection with its supported organization(s), by having control or management of the supporting organization vested in the same persons that control or manage the supported organization(s). **You must complete Part IV, Sections A and C.**

c ☐ **Type III functionally integrated.** A supporting organization operated in connection with, and functionally integrated with, its supported organization(s) (see instructions). **You must complete Part IV, Sections A, D, and E.**

d ☐ **Type III non-functionally integrated.** A supporting organization operated in connection with its supported organization(s) that is not functionally integrated. The organization generally must satisfy a distribution requirement and an attentiveness requirement (see instructions). **You must complete Part IV, Sections A and D, and Part V.**

e ☐ Check this box if the organization received a written determination from the IRS that it is a Type I, Type II, Type III functionally integrated, or Type III non-functionally integrated supporting organization.

f Enter the number of supported organizations ..... ☐

g Provide the following information about the supported organization(s).

(i) Name of supported organization	(ii) EIN	(iii) Type of organization (described on lines 1–10 above (see instructions))	(iv) Is the organization listed in your governing document? Yes	(iv) No	(v) Amount of monetary support (see instructions)	(vi) Amount of other support (see instructions)
(A)						
(B)						
(C)						
(D)						
(E)						
Total						

Part II **Support Schedule for Organizations Described in Sections 170(b)(1)(A)(iv) and 170(b)(1)(A)(vi)** (Complete only if you checked the box on line 5, 7, or 8 of Part I or if the organization failed to qualify under Part III. If the organization fails to qualify under the tests listed below, please complete Part III.)

Section A. Public Support

Calendar year (or fiscal year beginning in) ▶	(a) 2016	(b) 2017	(c) 2018	(d) 2019	(e) 2020	(f) Total
1 Gifts, grants, contributions, and membership fees received. (Do not include any "unusual grants.")	820,007	838,440	887,140	990,862	1,003,911	4,540,360
2 Tax revenues levied for the organization's benefit and either paid to or expended on its behalf						
3 The value of services or facilities furnished by a governmental unit to the organization without charge						
4 **Total.** Add lines 1 through 3	820,007	838,440	887,140	990,862	1,003,911	4,540,360
5 The portion of total contributions by each person (other than a governmental unit or publicly supported organization) included on line 1 that exceeds 2% of the amount shown on line 11, column (f)						
6 **Public support.** Subtract line 5 from line 4						4,540,360

Section B. Total Support

Calendar year (or fiscal year beginning in) ▶	(a) 2016	(b) 2017	(c) 2018	(d) 2019	(e) 2020	(f) Total
7 Amounts from line 4	820,007	838,440	887,140	990,862	1,003,911	4,540,360
8 Gross income from interest, dividends, payments received on securities loans, rents, royalties, and income from similar sources	170					170
9 Net income from unrelated business activities, whether or not the business is regularly carried on						
10 Other income. Do not include gain or loss from the sale of capital assets (Explain in Part VI.)						
11 **Total support.** Add lines 7 through 10						4,540,530
12 Gross receipts from related activities, etc. (see instructions)					12	1,519,341

13 **First 5 years.** If the Form 990 is for the organization's first, second, third, fourth, or fifth tax year as a section 501(c)(3) organization, check this box and **stop here** ▶ ☐

Section C. Computation of Public Support Percentage

14	Public support percentage for 2020 (line 6, column (f) divided by line 11, column (f))	14	100.00 %
15	Public support percentage from 2019 Schedule A, Part II, line 14	15	99.99 %

16a **33 1/3% support test—2020.** If the organization did not check the box on line 13, and line 14 is 33 1/3% or more, check this box and **stop here.** The organization qualifies as a publicly supported organization ▶ ☒

b **33 1/3% support test—2019.** If the organization did not check a box on line 13 or 16a, and line 15 is 33 1/3% or more, check this box and **stop here.** The organization qualifies as a publicly supported organization ▶ ☐

17a **10%-facts-and-circumstances test—2020.** If the organization did not check a box on line 13, 16a, or 16b, and line 14 is 10% or more, and if the organization meets the "facts-and-circumstances" test, check this box and **stop here.** Explain in Part VI how the organization meets the "facts-and-circumstances" test. The organization qualifies as a publicly supported organization ▶ ☐

b **10%-facts-and-circumstances test—2019.** If the organization did not check a box on line 13, 16a, 16b, or 17a, and line 15 is 10% or more, and if the organization meets the "facts-and-circumstances" test, check this box and **stop here.** Explain in Part VI how the organization meets the "facts-and-circumstances" test. The organization qualifies as a publicly supported organization ▶ ☐

18 **Private foundation.** If the organization did not check a box on line 13, 16a, 16b, 17a, or 17b, check this box and see instructions ▶ ☐

Part III Support Schedule for Organizations Described in Section 509(a)(2)

(Complete only if you checked the box on line 10 of Part I or if the organization failed to qualify under Part II. If the organization fails to qualify under the tests listed below, please complete Part II.)

Section A. Public Support

Calendar year (or fiscal year beginning in) ▶	(a) 2016	(b) 2017	(c) 2018	(d) 2019	(e) 2020	(f) Total
1 Gifts, grants, contributions, and membership fees received. (Do not include any "unusual grants.")						
2 Gross receipts from admissions, merchandise sold or services performed, or facilities furnished in any activity that is related to the organization's tax-exempt purpose						
3 Gross receipts from activities that are not an unrelated trade or business under section 513						
4 Tax revenues levied for the organization's benefit and either paid to or expended on its behalf						
5 The value of services or facilities furnished by a governmental unit to the organization without charge						
6 **Total.** Add lines 1 through 5						
7a Amounts included on lines 1, 2, and 3 received from disqualified persons						
b Amounts included on lines 2 and 3 received from other than disqualified persons that exceed the greater of $5,000 or 1% of the amount on line 13 for the year						
c Add lines 7a and 7b						
8 **Public support.** (Subtract line 7c from line 6.)						

Section B. Total Support

Calendar year (or fiscal year beginning in) ▶	(a) 2016	(b) 2017	(c) 2018	(d) 2019	(e) 2020	(f) Total
9 Amounts from line 6						
10a Gross income from interest, dividends, payments received on securities loans, rents, royalties, and income from similar sources						
b Unrelated business taxable income (less section 511 taxes) from businesses acquired after June 30, 1975						
c Add lines 10a and 10b						
11 Net income from unrelated business activities not included in line 10b, whether or not the business is regularly carried on						
12 Other income. Do not include gain or loss from the sale of capital assets (Explain in Part VI.)						
13 **Total support.** (Add lines 9, 10c, 11, and 12.)						

14 **First 5 years.** If the Form 990 is for the organization's first, second, third, fourth, or fifth tax year as a section 501(c)(3) organization, check this box and **stop here** ▶ ☐

Section C. Computation of Public Support Percentage

15 Public support percentage for 2020 (line 8, column (f), divided by line 13, column (f))	15	%
16 Public support percentage from 2019 Schedule A, Part III, line 15	16	%

Section D. Computation of Investment Income Percentage

17 Investment income percentage for **2020** (line 10c, column (f), divided by line 13, column (f))	17	%
18 Investment income percentage from **2019** Schedule A, Part III, line 17	18	%

19a **33 1/3% support tests—2020.** If the organization did not check the box on line 14, and line 15 is more than 33 1/3%, and line 17 is not more than 33 1/3%, check this box and **stop here.** The organization qualifies as a publicly supported organization ▶ ☐

b **33 1/3% support tests—2019.** If the organization did not check a box on line 14 or line 19a, and line 16 is more than 33 1/3%, and line 18 is not more than 33 1/3%, check this box and **stop here.** The organization qualifies as a publicly supported organization ▶ ☐

20 **Private foundation.** If the organization did not check a box on line 14, 19a, or 19b, check this box and see instructions ▶ ☐

Part IV Supporting Organizations

(Complete only if you checked a box in line 12 on Part I. If you checked box 12a, Part I, complete Sections A and B. If you checked box 12b, Part I, complete Sections A and C. If you checked box 12c, Part I, complete Sections A, D, and E. If you checked box 12d, Part I, complete Sections A and D, and complete Part V.)

Section A. All Supporting Organizations

			Yes	No
1	Are all of the organization's supported organizations listed by name in the organization's governing documents? *If "No," describe in Part VI how the supported organizations are designated. If designated by class or purpose, describe the designation. If historic and continuing relationship, explain.*	1		
2	Did the organization have any supported organization that does not have an IRS determination of status under section 509(a)(1) or (2)? *If "Yes," explain in Part VI how the organization determined that the supported organization was described in section 509(a)(1) or (2).*	2		
3a	Did the organization have a supported organization described in section 501(c)(4), (5), or (6)? *If "Yes," answer lines 3b and 3c below.*	3a		
b	Did the organization confirm that each supported organization qualified under section 501(c)(4), (5), or (6) and satisfied the public support tests under section 509(a)(2)? *If "Yes," describe in Part VI when and how the organization made the determination.*	3b		
c	Did the organization ensure that all support to such organizations was used exclusively for section 170(c)(2)(B) purposes? *If "Yes," explain in Part VI what controls the organization put in place to ensure such use.*	3c		
4a	Was any supported organization not organized in the United States ("foreign supported organization")? *If "Yes," and if you checked 12a or 12b in Part I, answer (b) and (c) below.*	4a		
b	Did the organization have ultimate control and discretion in deciding whether to make grants to the foreign supported organization? *If "Yes," describe in Part VI how the organization had such control and discretion despite being controlled or supervised by or in connection with its supported organizations.*	4b		
c	Did the organization support any foreign supported organization that does not have an IRS determination under sections 501(c)(3) and 509(a)(1) or (2)? *If "Yes," explain in Part VI what controls the organization used to ensure that all support to the foreign supported organization was used exclusively for section 170(c)(2)(B) purposes.*	4c		
5a	Did the organization add, substitute, or remove any supported organizations during the tax year? *If "Yes," answer lines 5b and 5c below (if applicable). Also, provide detail in Part VI, including (i) the names and EIN numbers of the supported organizations added, substituted, or removed; (ii) the reasons for each such action; (iii) the authority under the organization's organizing document authorizing such action; and (iv) how the action was accomplished (such as by amendment to the organizing document).*	5a		
b	**Type I or Type II only.** Was any added or substituted supported organization part of a class already designated in the organization's organizing document?	5b		
c	**Substitutions only.** Was the substitution the result of an event beyond the organization's control?	5c		
6	Did the organization provide support (whether in the form of grants or the provision of services or facilities) to anyone other than (i) its supported organizations, (ii) individuals that are part of the charitable class benefited by one or more of its supported organizations, or (iii) other supporting organizations that also support or benefit one or more of the filing organization's supported organizations? *If "Yes," provide detail in Part VI.*	6		
7	Did the organization provide a grant, loan, compensation, or other similar payment to a substantial contributor (as defined in section 4958(c)(3)(C)), a family member of a substantial contributor, or a 35% controlled entity with regard to a substantial contributor? *If "Yes," complete Part I of Schedule L (Form 990 or 990-EZ).*	7		
8	Did the organization make a loan to a disqualified person (as defined in section 4958) not described in line 7? *If "Yes," complete Part I of Schedule L (Form 990 or 990-EZ).*	8		
9a	Was the organization controlled directly or indirectly at any time during the tax year by one or more disqualified persons, as defined in section 4946 (other than foundation managers and organizations described in section 509(a)(1) or (2))? *If "Yes," provide detail in Part VI.*	9a		
b	Did one or more disqualified persons (as defined in line 9a) hold a controlling interest in any entity in which the supporting organization had an interest? *If "Yes," provide detail in Part VI.*	9b		
c	Did a disqualified person (as defined in line 9a) have an ownership interest in, or derive any personal benefit from, assets in which the supporting organization also had an interest? *If "Yes," provide detail in Part VI.*	9c		
10a	Was the organization subject to the excess business holdings rules of section 4943 because of section 4943(f) (regarding certain Type II supporting organizations, and all Type III non-functionally integrated supporting organizations)? *If "Yes," answer line 10b below.*	10a		
b	Did the organization have any excess business holdings in the tax year? *(Use Schedule C, Form 4720, to determine whether the organization had excess business holdings.)*	10b		

Part IV Supporting Organizations *(continued)*

			Yes	No
11	Has the organization accepted a gift or contribution from any of the following persons?			
a	A person who directly or indirectly controls, either alone or together with persons described in lines 11b and 11c below, the governing body of a supported organization?	11a		
b	A family member of a person described in line 11a above?	11b		
c	A 35% controlled entity of a person described in line 11a or 11b above? *If "Yes" to line 11a, 11b, or 11c, provide detail in Part VI.*	11c		

Section B. Type I Supporting Organizations

			Yes	No
1	Did the governing body, members of the governing body, officers acting in their official capacity, or membership of one or more supported organizations have the power to regularly appoint or elect at least a majority of the organization's officers, directors, or trustees at all times during the tax year? *If "No," describe in Part VI how the supported organization(s) effectively operated, supervised, or controlled the organization's activities. If the organization had more than one supported organization, describe how the powers to appoint and/or remove officers, directors, or trustees were allocated among the supported organizations and what conditions or restrictions, if any, applied to such powers during the tax year.*	1		
2	Did the organization operate for the benefit of any supported organization other than the supported organization(s) that operated, supervised, or controlled the supporting organization? *If "Yes," explain in Part VI how providing such benefit carried out the purposes of the supported organization(s) that operated, supervised, or controlled the supporting organization.*	2		

Section C. Type II Supporting Organizations

			Yes	No
1	Were a majority of the organization's directors or trustees during the tax year also a majority of the directors or trustees of each of the organization's supported organization(s)? *If "No," describe in Part VI how control or management of the supporting organization was vested in the same persons that controlled or managed the supported organization(s).*	1		

Section D. All Type III Supporting Organizations

			Yes	No
1	Did the organization provide to each of its supported organizations, by the last day of the fifth month of the organization's tax year, (i) a written notice describing the type and amount of support provided during the prior tax year, (ii) a copy of the Form 990 that was most recently filed as of the date of notification, and (iii) copies of the organization's governing documents in effect on the date of notification, to the extent not previously provided?	1		
2	Were any of the organization's officers, directors, or trustees either (i) appointed or elected by the supported organization(s) or (ii) serving on the governing body of a supported organization? *If "No," explain in Part VI how the organization maintained a close and continuous working relationship with the supported organization(s).*	2		
3	By reason of the relationship described in line 2, above, did the organization's supported organizations have a significant voice in the organization's investment policies and in directing the use of the organization's income or assets at all times during the tax year? *If "Yes," describe in Part VI the role the organization's supported organizations played in this regard.*	3		

Section E. Type III Functionally-Integrated Supporting Organizations

1 *Check the box next to the method that the organization used to satisfy the Integral Part Test during the year (see instructions).*

a ☐ The organization satisfied the Activities Test. *Complete line 2 below.*

b ☐ The organization is the parent of each of its supported organizations. *Complete line 3 below.*

c ☐ The organization supported a governmental entity. *Describe in Part VI how you supported a governmental entity (see instructions).*

			Yes	No
2	Activities Test. *Answer lines 2a and 2b below.*			
a	Did substantially all of the organization's activities during the tax year directly further the exempt purposes of the supported organization(s) to which the organization was responsive? *If "Yes," then in Part VI identify those supported organizations and explain how these activities directly furthered their exempt purposes, how the organization was responsive to those supported organizations, and how the organization determined that these activities constituted substantially all of its activities.*	2a		
b	Did the activities described in line 2a, above, constitute activities that, but for the organization's involvement, one or more of the organization's supported organization(s) would have been engaged in? If "Yes," explain in *Part VI the reasons for the organization's position that its supported organization(s) would have engaged in these activities but for the organization's involvement.*	2b		
3	Parent of Supported Organizations. *Answer lines 3a and 3b below.*			
a	Did the organization have the power to regularly appoint or elect a majority of the officers, directors, or trustees of each of the supported organizations? *If "Yes" or "No," provide details in Part VI.*	3a		
b	Did the organization exercise a substantial degree of direction over the policies, programs, and activities of each of its supported organizations? *If "Yes," describe in Part VI the role played by the organization in this regard.*	3b		

Part V Type III Non-Functionally Integrated 509(a)(3) Supporting Organizations

1 ☐ Check here if the organization satisfied the Integral Part Test as a qualifying trust on Nov. 20, 1970 (*explain in Part VI*). **See instructions.** All other Type III non-functionally integrated supporting organizations must complete Sections A through E.

Section A – Adjusted Net Income		(A) Prior Year	(B) Current Year (optional)
1 Net short-term capital gain	1		
2 Recoveries of prior-year distributions	2		
3 Other gross income (see instructions)	3		
4 Add lines 1 through 3.	4		
5 Depreciation and depletion	5		
6 Portion of operating expenses paid or incurred for production or collection of gross income or for management, conservation, or maintenance of property held for production of income (see instructions)	6		
7 Other expenses (see instructions)	7		
8 **Adjusted Net Income** (subtract lines 5, 6, and 7 from line 4)	8		

Section B – Minimum Asset Amount		(A) Prior Year	(B) Current Year (optional)
1 Aggregate fair market value of all non-exempt-use assets (see instructions for short tax year or assets held for part of year):			
a Average monthly value of securities	1a		
b Average monthly cash balances	1b		
c Fair market value of other non-exempt-use assets	1c		
d **Total** (add lines 1a, 1b, and 1c)	1d		
e **Discount** claimed for blockage or other factors *(explain in detail in Part VI)*:			
2 Acquisition indebtedness applicable to non-exempt-use assets	2		
3 Subtract line 2 from line 1d.	3		
4 Cash deemed held for exempt use. Enter 0.015 of line 3 (for greater amount, see instructions).	4		
5 Net value of non-exempt-use assets (subtract line 4 from line 3)	5		
6 Multiply line 5 by 0.035.	6		
7 Recoveries of prior-year distributions	7		
8 **Minimum Asset Amount** (add line 7 to line 6)	8		

Section C – Distributable Amount			Current Year
1 Adjusted net income for prior year (from Section A, line 8, column A)	1		
2 Enter 0.85 of line 1.	2		
3 Minimum asset amount for prior year (from Section B, line 8, column A)	3		
4 Enter greater of line 2 or line 3.	4		
5 Income tax imposed in prior year	5		
6 **Distributable Amount.** Subtract line 5 from line 4, unless subject to emergency temporary reduction (see instructions).	6		

7 ☐ Check here if the current year is the organization's first as a non-functionally integrated Type III supporting organization (see instructions).

Part V Type III Non-Functionally Integrated 509(a)(3) Supporting Organizations *(continued)*

Section D – Distributions	Current Year
1 Amounts paid to supported organizations to accomplish exempt purposes	
2 Amounts paid to perform activity that directly furthers exempt purposes of supported organizations, in excess of income from activity	
3 Administrative expenses paid to accomplish exempt purposes of supported organizations	
4 Amounts paid to acquire exempt-use assets	
5 Qualified set-aside amounts (prior IRS approval required—*provide details in Part VI*)	
6 Other distributions (*describe in Part VI*). See instructions.	
7 **Total annual distributions.** Add lines 1 through 6.	
8 Distributions to attentive supported organizations to which the organization is responsive (*provide details in Part VI*). See instructions.	
9 Distributable amount for 2020 from Section C, line 6	
10 Line 8 amount divided by line 9 amount	

Section E – Distribution Allocations (see instructions)	(i) Excess Distributions	(ii) Underdistributions Pre-2020	(iii) Distributable Amount for 2020
1 Distributable amount for 2020 from Section C, line 6			
2 Underdistributions, if any, for years prior to 2020 (reasonable cause required–*explain in Part VI*). See instructions.			
3 Excess distributions carryover, if any, to 2020			
a From 2015			
b From 2016			
c From 2017			
d From 2018			
e From 2019			
f **Total** of lines 3a through 3e			
g Applied to underdistributions of prior years			
h Applied to 2020 distributable amount			
i Carryover from 2015 not applied (see instructions)			
j Remainder. Subtract lines 3g, 3h, and 3i from line 3f.			
4 Distributions for 2020 from Section D, line 7: $			
a Applied to underdistributions of prior years			
b Applied to 2020 distributable amount			
c Remainder. Subtract lines 4a and 4b from line 4.			
5 Remaining underdistributions for years prior to 2020, if any. Subtract lines 3g and 4a from line 2. For result greater than zero, *explain in Part VI*. See instructions.			
6 Remaining underdistributions for 2020 Subtract lines 3h and 4b from line 1. For result greater than zero, *explain in Part VI*. See instructions.			
7 **Excess distributions carryover to 2021.** Add lines 3j and 4c.			
8 Breakdown of line 7:			
a Excess from 2016			
b Excess from 2017			
c Excess from 2018			
d Excess from 2019			
e Excess from 2020			

Part VI **Supplemental Information.** Provide the explanations required by Part II, line 10; Part II, line 17a or 17b; Part III, line 12; Part IV, Section A, lines 1, 2, 3b, 3c, 4b, 4c, 5a, 6, 9a, 9b, 9c, 11a, 11b, and 11c; Part IV, Section B, lines 1 and 2; Part IV, Section C, line 1; Part IV, Section D, lines 2 and 3; Part IV, Section E, lines 1c, 2a, 2b, 3a, and 3b; Part V, line 1; Part V, Section B, line 1e; Part V, Section D, lines 5, 6, and 8; and Part V, Section E, lines 2, 5, and 6. Also complete this part for any additional information. (See instructions.)

SCHEDULE D (Form 990)

Department of the Treasury
Internal Revenue Service

Supplemental Financial Statements

▶ Complete if the organization answered "Yes" on Form 990, Part IV, line 6, 7, 8, 9, 10, 11a, 11b, 11c, 11d, 11e, 11f, 12a, or 12b.
▶ Attach to Form 990.
▶ Go to *www.irs.gov/Form990* for instructions and the latest information.

OMB No. 1545-0047
2020
Open to Public Inspection

Name of the organization
NORTHERN NEVADA BUILDING & CONSTRUC TRADES COUNCIL DEVELOPMENT CORP

Employer identification number
88-0176297

Part I Organizations Maintaining Donor Advised Funds or Other Similar Funds or Accounts.

Complete if the organization answered "Yes" on Form 990, Part IV, line 6.

	(a) Donor advised funds	(b) Funds and other accounts
1 Total number at end of year		
2 Aggregate value of contributions to (during year)		
3 Aggregate value of grants from (during year)		
4 Aggregate value at end of year		

5 Did the organization inform all donors and donor advisors in writing that the assets held in donor advised funds are the organization's property, subject to the organization's exclusive legal control? ☐ Yes ☐ No

6 Did the organization inform all grantees, donors, and donor advisors in writing that grant funds can be used only for charitable purposes and not for the benefit of the donor or donor advisor, or for any other purpose conferring impermissible private benefit? ☐ Yes ☐ No

Part II Conservation Easements.

Complete if the organization answered "Yes" on Form 990, Part IV, line 7.

1 Purpose(s) of conservation easements held by the organization (check all that apply).
- ☐ Preservation of land for public use (for example, recreation or educatior
- ☐ Protection of natural habitat
- ☐ Preservation of open space
- ☐ Preservation of a historically important land area
- ☐ Preservation of a certified historic structure

2 Complete lines 2a through 2d if the organization held a qualified conservation contribution in the form of a conservation easement on the last day of the tax year.

		Held at the End of the Tax Year
a Total number of conservation easements	2a	
b Total acreage restricted by conservation easements	2b	
c Number of conservation easements on a certified historic structure included in (a)	2c	
d Number of conservation easements included in (c) acquired after 7/25/06, and not on a historic structure listed in the National Register	2d	

3 Number of conservation easements modified, transferred, released, extinguished, or terminated by the organization during the tax year ▶

4 Number of states where property subject to conservation easement is located ▶

5 Does the organization have a written policy regarding the periodic monitoring, inspection, handling of violations, and enforcement of the conservation easements it holds? ☐ Yes ☐ No

6 Staff and volunteer hours devoted to monitoring, inspecting, handling of violations, and enforcing conservation easements during the year ▶

7 Amount of expenses incurred in monitoring, inspecting, handling of violations, and enforcing conservation easements during the year ▶ $

8 Does each conservation easement reported on line 2(d) above satisfy the requirements of section 170(h)(4)(B)(i) and section 170(h)(4)(B)(ii)? ☐ Yes ☐ No

9 In Part XIII, describe how the organization reports conservation easements in its revenue and expense statement and balance sheet, and include, if applicable, the text of the footnote to the organization's financial statements that describes the organization's accounting for conservation easements.

Part III Organizations Maintaining Collections of Art, Historical Treasures, or Other Similar Assets.

Complete if the organization answered "Yes" on Form 990, Part IV, line 8.

1a If the organization elected, as permitted under FASB ASC 958, not to report in its revenue statement and balance sheet works of art, historical treasures, or other similar assets held for public exhibition, education, or research in furtherance of public service, provide in Part XIII the text of the footnote to its financial statements that describes these items.

b If the organization elected, as permitted under FASB ASC 958, to report in its revenue statement and balance sheet works of art, historical treasures, or other similar assets held for public exhibition, education, or research in furtherance of public service, provide the following amounts relating to these items:

(i) Revenue included on Form 990, Part VIII, line 1 ▶ $

(ii) Assets included in Form 990, Part X ▶ $

2 If the organization received or held works of art, historical treasures, or other similar assets for financial gain, provide the following amounts required to be reported under FASB ASC 958 relating to these items:

a Revenue included on Form 990, Part VIII, line 1 ▶ $

b Assets included in Form 990, Part X ▶ $

Part III Organizations Maintaining Collections of Art, Historical Treasures, or Other Similar Assets *(continued)*

3 Using the organization's acquisition, accession, and other records, check any of the following that make significant use of its collection items (check all that apply):

a ☐ Public exhibition
b ☐ Scholarly research
c ☐ Preservation for future generations
d ☐ Loan or exchange program
e ☐ Other .....

4 Provide a description of the organization's collections and explain how they further the organization's exempt purpose in Part XIII.

5 During the year, did the organization solicit or receive donations of art, historical treasures, or other similar assets to be sold to raise funds rather than to be maintained as part of the organization's collection? ☐ Yes ☐ No

Part IV Escrow and Custodial Arrangements.

Complete if the organization answered "Yes" on Form 990, Part IV, line 9, or reported an amount on Form 990, Part X, line 21.

1a Is the organization an agent, trustee, custodian or other intermediary for contributions or other assets not included on Form 990, Part X? ☐ Yes ☐ No

b If "Yes," explain the arrangement in Part XIII and complete the following table:

		Amount
c Beginning balance	1c	
d Additions during the year	1d	
e Distributions during the year	1e	
f Ending balance	1f	

2a Did the organization include an amount on Form 990, Part X, line 21, for escrow or custodial account liability? ☐ Yes ☐ No

b If "Yes," explain the arrangement in Part XIII. Check here if the explanation has been provided on Part XIII ☐

Part V Endowment Funds.

Complete if the organization answered "Yes" on Form 990, Part IV, line 10.

	(a) Current year	(b) Prior year	(c) Two years back	(d) Three years back	(e) Four years back
1a Beginning of year balance					
b Contributions					
c Net investment earnings, gains, and losses					
d Grants or scholarships					
e Other expenditures for facilities and programs					
f Administrative expenses					
g End of year balance					

2 Provide the estimated percentage of the current year end balance (line 1g, column (a)) held as:

a Board designated or quasi-endowment ▶ ..... %
b Permanent endowment ▶ ..... %
c Term endowment ▶ ..... %

The percentages on lines 2a, 2b, and 2c should equal 100%.

3a Are there endowment funds not in the possession of the organization that are held and administered for the organization by:

		Yes	No
(i) Unrelated organizations	3a(i)		
(ii) Related organizations	3a(ii)		
b If "Yes" on line 3a(ii), are the related organizations listed as required on Schedule R?	3b		

4 Describe in Part XIII the intended uses of the organization's endowment funds.

Part VI Land, Buildings, and Equipment.

Complete if the organization answered "Yes" on Form 990, Part IV, line 11a. See Form 990, Part X, line 10.

Description of property	(a) Cost or other basis (investment)	(b) Cost or other basis (other)	(c) Accumulated depreciation	(d) Book value
1a Land		252,019		252,019
b Buildings		3,152,564	2,838,655	313,909
c Leasehold improvements				
d Equipment		147,805	100,557	47,248
e Other		1,231,804	900,471	331,333
Total. Add lines 1a through 1e. *(Column (d) must equal Form 990, Part X, column (B), line 10c.)* ▶				944,509

Schedule D (Form 990) 2020

DAA

Part VII Investments – Other Securities.
Complete if the organization answered "Yes" on Form 990, Part IV, line 11b. See Form 990, Part X, line 12.

(a) Description of security or category (including name of security)	(b) Book value	(c) Method of valuation: Cost or end-of-year market value
(1) Financial derivatives		
(2) Closely held equity interests		
(3) Other		
(A)		
(B)		
(C)		
(D)		
(E)		
(F)		
(G)		
(H)		
Total. *(Column (b) must equal Form 990, Part X, col. (B) line 12.)* ▶		

Part VIII Investments – Program Related.
Complete if the organization answered "Yes" on Form 990, Part IV, line 11c. See Form 990, Part X, line 13.

(a) Description of investment	(b) Book value	(c) Method of valuation: Cost or end-of-year market value
(1)		
(2)		
(3)		
(4)		
(5)		
(6)		
(7)		
(8)		
(9)		
Total. *(Column (b) must equal Form 990, Part X, col. (B) line 13.)* ▶		

Part IX Other Assets.
Complete if the organization answered "Yes" on Form 990, Part IV, line 11d. See Form 990, Part X, line 15.

(a) Description	(b) Book value
(1)	
(2)	
(3)	
(4)	
(5)	
(6)	
(7)	
(8)	
(9)	
Total. *(Column (b) must equal Form 990, Part X, col. (B) line 15.)* ▶	

Part X Other Liabilities.
Complete if the organization answered "Yes" on Form 990, Part IV, line 11e or 11f. See Form 990, Part X, line 25.

1. (a) Description of liability	(b) Book value
(1) Federal income taxes	
(2) TENANT SECURITY DEPOSITS	30,890
(3) REFUNDABLE PET DEPOSITS	844
(4)	
(5)	
(6)	
(7)	
(8)	
(9)	
Total. *(Column (b) must equal Form 990, Part X, col. (B) line 25.)* ▶	31,734

2. Liability for uncertain tax positions. In Part XIII, provide the text of the footnote to the organization's financial statements that reports the organization's liability for uncertain tax positions under FASB ASC 740. Check here if the text of the footnote has been provided in Part XIII ..... [X]

Part XI Reconciliation of Revenue per Audited Financial Statements With Revenue per Return.
Complete if the organization answered "Yes" on Form 990, Part IV, line 12a.

1	Total revenue, gains, and other support per audited financial statements			1	1,452,930
2	Amounts included on line 1 but not on Form 990, Part VIII, line 12:				
a	Net unrealized gains (losses) on investments	2a			
b	Donated services and use of facilities	2b			
c	Recoveries of prior year grants	2c			
d	Other (Describe in Part XIII.)	2d			
e	Add lines 2a through 2d			2e	
3	Subtract line 2e from line 1			3	1,452,930
4	Amounts included on Form 990, Part VIII, line 12, but not on line 1:				
a	Investment expenses not included on Form 990, Part VIII, line 7b	4a			
b	Other (Describe in Part XIII.)	4b			
c	Add lines 4a and 4b			4c	
5	Total revenue. Add lines 3 and 4c. *(This must equal Form 990, Part I, line 12.)*			5	1,452,930

Part XII Reconciliation of Expenses per Audited Financial Statements With Expenses per Return.
Complete if the organization answered "Yes" on Form 990, Part IV, line 12a.

1	Total expenses and losses per audited financial statements			1	1,204,761
2	Amounts included on line 1 but not on Form 990, Part IX, line 25:				
a	Donated services and use of facilities	2a			
b	Prior year adjustments	2b			
c	Other losses	2c			
d	Other (Describe in Part XIII.)	2d			
e	Add lines 2a through 2d			2e	
3	Subtract line 2e from line 1			3	1,204,761
4	Amounts included on Form 990, Part IX, line 25, but not on line 1:				
a	Investment expenses not included on Form 990, Part VIII, line 7b	4a			
b	Other (Describe in Part XIII.)	4b			
c	Add lines 4a and 4b			4c	
5	Total expenses. Add lines 3 and 4c. *(This must equal Form 990, Part I, line 18.)*			5	1,204,761

Part XIII Supplemental Information.

Provide the descriptions required for Part II, lines 3, 5, and 9; Part III, lines 1a and 4; Part IV, lines 1b and 2b; Part V, line 4; Part X, line 2; Part XI, lines 2d and 4b; and Part XII, lines 2d and 4b. Also complete this part to provide any additional information.

PART X - FIN 48 FOOTNOTE

THE PROJECT IS A NONPROFIT CORPORATION THAT IS EXEMPT FROM FEDERAL INCOME TAXES UN SECTION 501(C)(3) OF THE INTERNAL REVENUE CODE. ACCORDINGLY, NO LIABILITY FOR FEDERAL INCOME TAXES HAS BEEN PROVIDED IN THE FINANCIAL STATEMENTS. IT IS THE PROJECT'S TAX POSITION THAT IT HAS NOT ENGAGED IN ACTIVITIES THAT WOULD JEOPARDIZE ITS EXEMPT STATUS NOR HAS IT ENGAGED IN ACTIVITIES THAT WOULD RESULT IN UNRELATED BUSINESS INCOME TAX. THE PROJECT'S FORMS 990, RETURN OF ORGANIZATION EXEMPT FROM INCOME TAX, FOR THE TAX YEARS ENDING 2018, 2019 AND 2020 ARE SUBJECT TO EXAMINATION BY THE IRS, GENERALLY FOR THREE YEARS AFTER THEY WERE FILED.

Part XIII Supplemental Information *(continued)*

SCHEDULE L
(Form 990 or 990-EZ)
Department of the Treasury
Internal Revenue Service

Transactions With Interested Persons

▶ Complete if the organization answered "Yes" on Form 990, Part IV, line 25a, 25b, 26, 27, 28a, 28b, or 28c, or Form 990-EZ, Part V, line 38a or 40b.
▶ Attach to Form 990 or Form 990-EZ.
▶ Go to *www.irs.gov/Form990* for instructions and the latest information.

OMB No. 1545-0047
2020
Open To Public Inspection

Name of the organization: NORTHERN NEVADA BUILDING & CONSTRUC TRADES COUNCIL DEVELOPMENT CORP

Employer identification number: 88-0176297

Part I Excess Benefit Transactions (section 501(c)(3), section 501(c)(4), and 501(c)(29) organizations only).

Complete if the organization answered "Yes" on Form 990, Part IV, line 25a or 25b, or Form 990-EZ, Part V, line 40b.

1	(a) Name of disqualified person	(b) Relationship between disqualified person and organization	(c) Description of transaction	(d) Corrected? Yes	(d) Corrected? No
(1)					
(2)					
(3)					
(4)					
(5)					
(6)					

2 Enter the amount of tax incurred by the organization managers or disqualified persons during the year under section 4958 ▶ $

3 Enter the amount of tax, if any, on line 2, above, reimbursed by the organization ▶ $

Part II Loans to and/or From Interested Persons.

Complete if the organization answered "Yes" on Form 990-EZ, Part V, line 38a or Form 990, Part IV, line 26; or if the organization reported an amount on Form 990, Part X, line 5, 6, or 22.

	(a) Name of interested person	(b) Relationship with organization	(c) Purpose of loan	(d) Loan to or from the org.? To	(d) Loan to or from the org.? From	(e) Original principal amount	(f) Balance due	(g) In default? Yes	(g) In default? No	(h) Approved by board or committee? Yes	(h) Approved by board or committee? No	(i) Written agreement? Yes	(i) Written agreement? No
(1)													
(2)													
(3)													
(4)													
(5)													
(6)													
(7)													
(8)													
(9)													
(10)													
Total						▶ $							

Part III Grants or Assistance Benefiting Interested Persons.

Complete if the organization answered "Yes" on Form 990, Part IV, line 27.

	(a) Name of interested person	(b) Relationship between interested person and the organization	(c) Amount of assistance	(d) Type of assistance	(e) Purpose of assistance
(1)					
(2)					
(3)					
(4)					
(5)					
(6)					
(7)					
(8)					
(9)					
(10)					

Part IV Business Transactions Involving Interested Persons.

Complete if the organization answered "Yes" on Form 990, Part IV, line 28a, 28b, or 28c.

(a) Name of interested person	(b) Relationship between interested person and the organization	(c) Amount of transaction	(d) Description of transaction	(e) Sharing of org. revenues? Yes	(e) Sharing of org. revenues? No
(1) BUILDING & CONSTRUCTION TRADES	MANAGING AGENT				X
(2) COUNCIL OF NORTHERN NEVADA	& OWNER		MANAGEMENT FEES		X
(3)					
(4)					
(5)					
(6)					
(7)					
(8)					
(9)					
(10)					

Part V Supplemental Information.

Provide additional information for responses to questions on Schedule L (see instructions).

SCHEDULE O
(Form 990 or 990-EZ)

Department of the Treasury
Internal Revenue Service

Supplemental Information to Form 990 or 990-EZ

Complete to provide information for responses to specific questions on Form 990 or 990-EZ or to provide any additional information.

▶ Attach to Form 990 or 990-EZ.

▶ Go to *www.irs.gov/Form990* for the latest information.

OMB No. 1545-0047

2020

Open to Public Inspection

Name of the organization NORTHERN NEVADA BUILDING & CONSTRUC TRADES COUNCIL DEVELOPMENT CORP

Employer identification number 88-0176297

FORM 990, PART I, LINE 6

ALL OF THE BOARD MEMBERS ARE VOLUNTEERS AND THERE ARE NO BENEFITS PROVIDED.

FORM 990, PART VI, LINE 11B - ORGANIZATION'S PROCESS TO REVIEW FORM 990

990 IS COMPARED TO THE ANNUAL AUDIT

FORM 990, PART VI, LINE 15B - COMPENSATION PROCESS FOR OFFICERS

ALL COMPENSATION DECISIONS ARE TAKEN BEFORE THE BOARD AND AN AGREEMENT IS REACHED AMONG THE MEMBERS.

FORM 990, PART VI, LINE 19 - GOVERNING DOCUMENTS DISCLOSURE EXPLANATION

UPON REQUEST

Form **4562**

Department of the Treasury
Internal Revenue Service (99)

Depreciation and Amortization
(Including Information on Listed Property)

▶ Attach to your tax return.

▶ Go to *www.irs.gov/Form4562* for instructions and the latest information.

OMB No. 1545-0172

2020

Attachment Sequence No. **179**

Name(s) shown on return: NORTHERN NEVADA BUILDING & CONSTRUC TRADES COUNCIL DEVELOPMENT CORP

Identifying number: 88-0176297

Business or activity to which this form relates

INDIRECT DEPRECIATION

Part I Election To Expense Certain Property Under Section 179

Note: If you have any listed property, complete Part V before you complete Part I.

1	Maximum amount (see instructions)	1	1,040,000
2	Total cost of section 179 property placed in service (see instructions)	2	
3	Threshold cost of section 179 property before reduction in limitation (see instructions)	3	2,590,000
4	Reduction in limitation. Subtract line 3 from line 2. If zero or less, enter -0-	4	
5	Dollar limitation for tax year. Subtract line 4 from line 1. If zero or less, enter -0-. If married filing separately, see instructions	5	

6	(a) Description of property	(b) Cost (business use only)	(c) Elected cost

7	Listed property. Enter the amount from line 29	7	
8	Total elected cost of section 179 property. Add amounts in column (c), lines 6 and 7	8	
9	Tentative deduction. Enter the **smaller** of line 5 or line 8	9	
10	Carryover of disallowed deduction from line 13 of your 2019 Form 4562	10	
11	Business income limitation. Enter the smaller of business income (not less than zero) or line 5. See instructions	11	
12	Section 179 expense deduction. Add lines 9 and 10, but don't enter more than line 11	12	
13	Carryover of disallowed deduction to 2021. Add lines 9 and 10, less line 12 ▶	13	

Note: Don't use Part II or Part III below for listed property. Instead, use Part V.

Part II Special Depreciation Allowance and Other Depreciation (Don't include listed property. See instructions.)

14	Special depreciation allowance for qualified property (other than listed property) placed in service during the tax year. See instructions	14	
15	Property subject to section 168(f)(1) election	15	
16	Other depreciation (including ACRS)	16	87,988

Part III MACRS Depreciation (Don't include listed property. See instructions.)

Section A

17	MACRS deductions for assets placed in service in tax years beginning before 2020	17	5,180
18	If you are electing to group any assets placed in service during the tax year into one or more general asset accounts, check here ▶ ☐		

Section B—Assets Placed in Service During 2020 Tax Year Using the General Depreciation System

	(a) Classification of property	(b) Month and year placed in service	(c) Basis for depreciation (business/investment use only–see instructions)	(d) Recovery period	(e) Convention	(f) Method	(g) Depreciation deduction
19a	3-year property						
b	5-year property						
c	7-year property						
d	10-year property						
e	15-year property						
f	20-year property						
g	25-year property			25 yrs.		S/L	
h	Residential rental property			27.5 yrs.	MM	S/L	
				27.5 yrs.	MM	S/L	
i	Nonresidential real property			39 yrs.	MM	S/L	
					MM	S/L	

Section C—Assets Placed in Service During 2020 Tax Year Using the Alternative Depreciation System

20a	Class life					S/L	
b	12-year			12 yrs.		S/L	
c	30-year			30 yrs.	MM	S/L	
d	40-year			40 yrs.	MM	S/L	

Part IV Summary (See instructions.)

21	Listed property. Enter amount from line 28	21	
22	**Total.** Add amounts from line 12, lines 14 through 17, lines 19 and 20 in column (g), and line 21. Enter here and on the appropriate lines of your return. Partnerships and S corporations—see instructions	22	93,168
23	For assets shown above and placed in service during the current year, enter the portion of the basis attributable to section 263A costs	23	

Federal Asset Report

Form 990, Page 1

Asset	Description	Date In Service	Cost	Bus %	Sec 179 Bonus	Basis for Depr	Per	Conv	Meth	Prior	Current
Prior MACRS:											
132	Sewer Line Replacement	10/31/15	142,432			142,432	27	MM	S/L	23,091	5,180
			142,432			142,432				23,091	5,180
Other Depreciation:											
1	Fully Depreciated Improvements	1/01/80	195,270			195,270	15	MO	S/L	195,270	0
2	Earthwork	5/01/80	68,414			68,414	40	MO	S/L	68,262	152
3	Site Improvements	5/01/80	10,210			10,210	40	MO	S/L	10,182	28
4	Trees	10/01/87	2,045			2,045	18	MO	S/L	2,045	0
5	Speed Bumps	10/10/89	1,120			1,120	15	MO	S/L	1,120	0
6	Concrete	8/09/91	4,436			4,436	15	MO	S/L	4,436	0
7	Concrete	8/21/95	29,650			29,650	15	MO	S/L	29,650	0
9	Walkways	7/29/99	6,168			6,168	15	MO	S/L	6,168	0
10	Walkways	2/28/01	11,965			11,965	15	MO	S/L	11,965	0
11	Walkways & Ramps	10/01/01	12,339			12,339	15	MO	S/L	12,339	0
13	Walkways	10/01/02	6,770			6,770	15	MO	S/L	6,770	0
14	Landscaping	10/01/02	5,269			5,269	15	MO	S/L	5,269	0
15	Fencing	8/05/02	1,458			1,458	15	MO	S/L	1,458	0
16	Walkways	8/15/03	7,658			7,658	15	MO	S/L	7,658	0
18	Walkways	9/01/05	17,204			17,204	15	MO	S/L	16,630	574
20	Walkways	8/01/06	4,419			4,419	15	MO	S/L	4,026	295
21	Walkways	7/01/07	12,917			12,917	15	MO	S/L	10,908	861
22	Walkways	3/01/08	4,665			4,665	15	MO	S/L	3,732	311
23	Fully Depreciated Buildings	1/01/80	6,465			6,465	15	MO	S/L	6,465	0
24	Buildings	5/01/80	1,677,085			1,677,085	40	MO	S/L	1,673,586	3,499
25	Constr. Period Int.	5/01/80	103,655			103,655	40	MO	S/L	103,428	227
26	Roofing	12/02/91	7,565			7,565	15	MO	S/L	7,565	0
27	Roofing	3/01/95	30,560			30,560	15	MO	S/L	30,560	0
28	Handicap Ramps	12/01/94	8,816			8,816	15	MO	S/L	8,816	0
29	Plumbing	12/01/94	14,447			14,447	15	MO	S/L	14,447	0
30	Roofing	3/31/95	27,000			27,000	15	MO	S/L	27,000	0
31	Building Repair	3/31/95	2,150			2,150	15	MO	S/L	2,150	0
32	Concrete Steps	3/13/98	679			679	15	MO	S/L	679	0
33	Handicap Ramps	7/29/99	6,070			6,070	15	MO	S/L	6,070	0
34	Handicap Railings	9/01/99	1,700			1,700	15	MO	S/L	1,700	0
35	Handicap Ramps	2/28/01	6,131			6,131	15	MO	S/L	6,131	0
36	Handicap Ramps & Patio	11/01/01	8,766			8,766	15	MO	S/L	8,766	0
37	Handicap Railings	4/09/01	1,526			1,526	15	MO	S/L	1,526	0
38	Balcony Repair	11/01/01	8,300			8,300	15	MO	S/L	8,300	0
39	Tile	7/15/01	4,450			4,450	15	MO	S/L	4,450	0
40	Signs	10/01/01	3,417			3,417	15	MO	S/L	3,417	0
41	Paint Exterior	11/01/01	110,994			110,994	15	MO	S/L	110,994	0
42	Shower Tub	6/06/01	1,450			1,450	15	MO	S/L	1,450	0
43	Tile	2/01/04	6,723			6,723	15	MO	S/L	6,723	0
44	Trim	10/01/03	17,780			17,780	15	MO	S/L	17,780	0
45	Concrete Steps	3/07/05	1,619			1,619	15	MO	S/L	1,619	0
46	Tile	3/01/05	2,669			2,669	15	MO	S/L	2,669	0
47	Paint Trim	8/28/06	24,699			24,699	15	MO	S/L	22,367	1,647
48	Concrete Steps	7/09/07	2,283			2,283	15	MO	S/L	1,954	152
49	Fully Depreciated Buildings Equipment Fix	1/01/80	414,971			414,971	5	MO	S/L	414,971	0
50	Rec. Bldg	6/04/99	3,650			3,650	5	MO	S/L	3,650	0
51	Hot Water Heater	12/21/01	2,560			2,560	5	MO	S/L	2,560	0
52	Lights	7/23/02	2,748			2,748	5	MO	S/L	2,748	0
53	Water Heaters	6/18/03	2,182			2,182	5	MO	S/L	2,182	0
54	Pump	3/04/04	772			772	5	MO	S/L	772	0
62	Appliances	10/01/04	35,781			35,781	5	MO	S/L	35,781	0
63	Appliances	10/01/05	32,070			32,070	5	MO	S/L	32,070	0
64	Appliances	10/01/06	26,630			26,630	5	MO	S/L	26,630	0
65	Appliances	10/01/07	19,763			19,763	5	MO	S/L	19,763	0
66	Appliances	10/01/07	6,148			6,148	5	MO	S/L	6,148	0
68	Filing Cabinets	3/14/01	834			834	7	MO	S/L	834	0
69	Upholstry Chairs	3/28/01	2,074			2,074	7	MO	S/L	2,074	0
80	Carpet	10/01/04	30,889			30,889	5	MO	S/L	30,889	0
81	Furniture	2/01/05	5,354			5,354	5	MO	S/L	5,354	0
82	Flooring	10/01/05	42,799			42,799	5	MO	S/L	42,799	0
83	Furniture (C/A)	10/01/05	16,650			16,650	5	MO	S/L	16,650	0
84	Flooring	10/01/06	32,750			32,750	5	MO	S/L	32,750	0
85	Flooring	10/01/07	17,347			17,347	5	MO	S/L	17,347	0

Federal Asset Report
Form 990, Page 1

Asset	Description	Date In Service	Cost	Bus %	Sec 179	Bonus	Basis for Depr	Per	Conv	Meth	Prior	Current
86	Flooring	10/01/07	5,270				5,270	5	MO	S/L	5,270	0
88	Shed	12/12/00	1,552				1,552	5	MO	S/L	1,552	0
89	Billy Goat	8/30/01	1,137				1,137	5	MO	S/L	1,137	0
90	Mule	1/23/03	11,256				11,256	5	MO	S/L	11,256	0
91	Shed	12/06/02	1,669				1,669	5	MO	S/L	1,669	0
92	Shed	1/03/03	822				822	5	MO	S/L	822	0
93	Floor Machine	6/17/04	2,708				2,708	5	MO	S/L	2,708	0
94	Land	5/01/80	252,019				252,019	0	--	Land	0	0
95	Chairs, Lamps, Coffee Sets	8/25/09	696				696	5	MO	S/L	696	0
96	Charis & Lamps	11/19/09	421				421	5	MO	S/L	421	0
97	Coffee Tables, End Tables, Lamps & Side C	2/17/10	1,203				1,203	5	MO	S/L	1,203	0
99	Muratec Copier	4/14/09	5,363				5,363	5	MO	S/L	5,363	0
100	Dell Computer	4/29/09	737				737	5	MO	S/L	737	0
101	File Cabinet	8/12/09	623				623	7	MO	S/L	623	0
102	Snow Blower	11/18/09	645				645	5	MO	S/L	645	0
103	Rails	7/28/10	6,156				6,156	15	MO	S/L	3,967	411
104	Handicap Ramp	7/28/10	3,217				3,217	15	MO	S/L	2,073	215
105	Curbs	8/16/10	5,813				5,813	15	MO	S/L	3,714	387
106	Sofa and Loveseat	11/27/10	899				899	5	MO	S/L	899	0
107	Security Cameras	3/29/11	36,291				36,291	5	MO	S/L	36,291	0
108	Trailor	8/06/10	5,963				5,963	5	MO	S/L	5,963	0
109	New Curbs	1/28/12	1,291				1,291	15	MO	S/L	703	86
110	Parking Lot Improvements	9/12/11	484,550				484,550	15	MO	S/L	277,270	32,304
111	Furniture	6/21/11	538				538	7	MO	S/L	538	0
112	Sofa	7/26/11	966				966	7	MO	S/L	966	0
113	Sofa	8/17/11	538				538	7	MO	S/L	538	0
114	Tables and Chairs	10/26/11	405				405	7	MO	S/L	405	0
115	Chairs	3/02/12	207				207	7	MO	S/L	207	0
116	DVD Upgrade	5/27/11	568				568	5	MO	S/L	568	0
117	File Cabinet	3/12/12	590				590	7	MO	S/L	590	0
118	Dell Computer	3/27/12	1,995				1,995	5	MO	S/L	1,995	0
119	Pressure Washer	6/29/11	512				512	5	MO	S/L	512	0
120	Steps	4/11/12	20,322				20,322	15	MO	S/L	10,838	1,355
121	Steps	10/24/12	307				307	15	MO	S/L	152	20
123	Parking Lot Improvements	5/21/12	11,500				11,500	15	MO	S/L	6,006	766
124	Vacuum	7/30/12	393				393	5	MO	S/L	393	0
125	Quickbooks	8/04/12	2,888				2,888	5	MO	S/L	2,888	0
126	Cab Kit	9/09/12	2,783				2,783	5	MO	S/L	2,783	0
127	Tires	9/09/12	558				558	5	MO	S/L	558	0
129	Roofing	1/21/13	294,873				294,873	15	MO	S/L	140,884	19,658
131	Love Seat, Sofa and 6 Kitchen Chairs	6/09/14	1,240				1,240	7	MO	S/L	1,033	177
133	Sofa, Love Seat & Chairs	4/27/16	1,174				1,174	7	MO	S/L	657	168
134	Water Heater	4/13/16	2,229				2,229	5	MO	S/L	1,783	446
135	Water Heater - Laundry	6/02/16	4,553				4,553	5	MO	S/L	3,490	911
136	Interior/Exterior Repairs	8/04/17	30,644				30,644	15	MO	S/L	5,448	2,043
137	Water Heater Bldng 7	1/05/18	7,838				7,838	5	MO	S/L	3,527	1,567
138	Phone System ESI 50	4/06/18	2,495				2,495	5	MO	S/L	998	499
139	Office Computers	5/08/19	1,229				1,229	5	MO	S/L	225	246
140	Balcony Repair	7/27/19	6,562				6,562	15	MO	S/L	292	437
141	Balcony Repair	1/23/20	62,000				62,000	15	MO	S/L	689	4,133
142	Balcony Repair	3/23/20	24,187				24,187	15	MO	S/L	0	1,612
143	New Security Camera System	9/01/19	34,201				34,201	5	MO	S/L	3,990	6,840
144	Quality Carpet	8/26/20	27,300				27,300	15	MO	S/L	0	1,062
145	Bathroom repair	5/20/20	8,423				8,423	15	MO	S/L	0	468
147	Bathroom repair Building 5	8/17/20	10,079				10,079	15	MO	S/L	0	392
148	Building 2 bathroom repair	1/05/21	12,438				12,438	15	MO	S/L	0	207
149	Bathroom repair	7/16/20	28,171				28,171	15	MO	S/L	0	1,252
151	Computer	7/16/20	920				920	5	MO	S/L	0	123
152	Computer	8/07/20	1,223				1,223	5	MO	S/L	0	163
153	Golf Cars	8/19/20	5,040				5,040	5	MO	S/L	0	588
154	Kawasaki Yamaha Car	8/27/20	14,622				14,622	5	MO	S/L	0	1,706
	Total Other Depreciation		4,641,760				4,641,760				3,732,407	87,988
	Total ACRS and Other Depreciation		4,641,760				4,641,760				3,732,407	87,988

Federal Asset Report

Form 990, Page 1

Asset	Description	Date In Service	Cost	Bus %	Sec 179	Bonus	Basis for Depr	Per	Conv	Meth	Prior	Current
	Grand Totals		4,784,192				4,784,192				3,755,498	93,168
	Less: Dispositions and Transfers		0				0				0	0
	Less: Start-up/Org Expense		0				0				0	0
	Net Grand Totals		4,784,192				4,784,192				3,755,498	93,168

AMT Asset Report

Form 990, Page 1

Asset	Description	Date In Service	Cost	Bus %	Sec 179 Bonus	Basis for Depr	Per	Conv	Meth	Prior	Current
Prior MACRS:											
132	Sewer Line Replacement	10/31/15	142,432			142,432	27	MM	S/L	23,091	5,180
			142,432			142,432				23,091	5,180
Other Depreciation:											
1	Fully Depreciated Improvements	1/01/80	195,270			195,270	15	MO	S/L	195,270	0
2	Earthwork	5/01/80	68,414			68,414	40	MO	S/L	68,262	152
3	Site Improvements	5/01/80	10,210			10,210	40	MO	S/L	10,182	28
4	Trees	10/01/87	2,045			2,045	18	MO	S/L	2,045	0
5	Speed Bumps	10/10/89	1,120			1,120	15	MO	S/L	1,120	0
6	Concrete	8/09/91	4,436			4,436	15	MO	S/L	4,436	0
7	Concrete	8/21/95	29,650			29,650	15	MO	S/L	29,650	0
9	Walkways	7/29/99	6,168			6,168	15	MO	S/L	6,168	0
10	Walkways	2/28/01	11,965			11,965	15	MO	S/L	11,965	0
11	Walkways & Ramps	10/01/01	12,339			12,339	15	MO	S/L	12,339	0
13	Walkways	10/01/02	6,770			6,770	15	MO	S/L	6,770	0
14	Landscaping	10/01/02	5,269			5,269	15	MO	S/L	5,269	0
15	Fencing	8/05/02	1,458			1,458	15	MO	S/L	1,458	0
16	Walkways	8/15/03	7,658			7,658	15	MO	S/L	7,658	0
18	Walkways	9/01/05	17,204			17,204	15	MO	S/L	16,630	574
20	Walkways	8/01/06	4,419			4,419	15	MO	S/L	4,026	295
21	Walkways	7/01/07	12,917			12,917	15	MO	S/L	10,908	861
22	Walkways	3/01/08	4,665			4,665	15	MO	S/L	3,732	311
23	Fully Depreciated Buildings	1/01/80	6,465			6,465	15	MO	S/L	6,465	0
24	Buildings	5/01/80	1,677,085			1,677,085	40	MO	S/L	1,673,586	3,499
25	Constr. Period Int.	5/01/80	103,655			103,655	40	MO	S/L	103,428	227
26	Roofing	12/02/91	7,565			7,565	15	MO	S/L	7,565	0
27	Roofing	3/01/95	30,560			30,560	15	MO	S/L	30,560	0
28	Handicap Ramps	12/01/94	8,816			8,816	15	MO	S/L	8,816	0
29	Plumbing	12/01/94	14,447			14,447	15	MO	S/L	14,447	0
30	Roofing	3/31/95	27,000			27,000	15	MO	S/L	27,000	0
31	Building Repair	3/31/95	2,150			2,150	15	MO	S/L	2,150	0
32	Concrete Steps	3/13/98	679			679	15	MO	S/L	679	0
33	Handicap Ramps	7/29/99	6,070			6,070	15	MO	S/L	6,070	0
34	Handicap Railings	9/01/99	1,700			1,700	15	MO	S/L	1,700	0
35	Handicap Ramps	2/28/01	6,131			6,131	15	MO	S/L	6,131	0
36	Handicap Ramps & Patio	11/01/01	8,766			8,766	15	MO	S/L	8,766	0
37	Handicap Railings	4/09/01	1,526			1,526	15	MO	S/L	1,526	0
38	Balcony Repair	11/01/01	8,300			8,300	15	MO	S/L	8,300	0
39	Tile	7/15/01	4,450			4,450	15	MO	S/L	4,450	0
40	Signs	10/01/01	3,417			3,417	15	MO	S/L	3,417	0
41	Paint Exterior	11/01/01	110,994			110,994	15	MO	S/L	110,994	0
42	Shower Tub	6/06/01	1,450			1,450	15	MO	S/L	1,450	0
43	Tile	2/01/04	6,723			6,723	15	MO	S/L	6,723	0
44	Trim	10/01/03	17,780			17,780	15	MO	S/L	17,780	0
45	Concrete Steps	3/07/05	1,619			1,619	15	MO	S/L	1,619	0
46	Tile	3/01/05	2,669			2,669	15	MO	S/L	2,669	0
47	Paint Trim	8/28/06	24,699			24,699	15	MO	S/L	22,367	1,647
48	Concrete Steps	7/09/07	2,283			2,283	15	MO	S/L	1,954	152
49	Fully Depreciated Buildings Equipment Fix	1/01/80	414,971			414,971	5	MO	S/L	414,971	0
50	Rec. Bldg	6/04/99	3,650			3,650	5	MO	S/L	3,650	0
51	Hot Water Heater	12/21/01	2,560			2,560	5	MO	S/L	2,560	0
52	Lights	7/23/02	2,748			2,748	5	MO	S/L	2,748	0
53	Water Heaters	6/18/03	2,182			2,182	5	MO	S/L	2,182	0
54	Pump	3/04/04	772			772	5	MO	S/L	772	0
62	Appliances	10/01/04	35,781			35,781	5	MO	S/L	35,781	0
63	Appliances	10/01/05	32,070			32,070	5	MO	S/L	32,070	0
64	Appliances	10/01/06	26,630			26,630	5	MO	S/L	26,630	0
65	Appliances	10/01/07	19,763			19,763	5	MO	S/L	19,763	0
66	Appliances	10/01/07	6,148			6,148	5	MO	S/L	6,148	0
68	Filing Cabinets	3/14/01	834			834	7	MO	S/L	834	0
69	Upholstry Chairs	3/28/01	2,074			2,074	7	MO	S/L	2,074	0
80	Carpet	10/01/04	30,889			30,889	5	MO	S/L	30,889	0
81	Furniture	2/01/05	5,354			5,354	5	MO	S/L	5,354	0
82	Flooring	10/01/05	42,799			42,799	5	MO	S/L	42,799	0
83	Furniture (C/A)	10/01/05	16,650			16,650	5	MO	S/L	16,650	0
84	Flooring	10/01/06	32,750			32,750	5	MO	S/L	32,750	0
85	Flooring	10/01/07	17,347			17,347	5	MO	S/L	17,347	0

AMT Asset Report

Form 990, Page 1

Asset	Description	Date In Service	Cost	Bus %	Sec 179	Bonus	Basis for Depr	Per	Conv	Meth	Prior	Current
86	Flooring	10/01/07	5,270				5,270	5	MO	S/L	5,270	0
88	Shed	12/12/00	1,552				1,552	5	MO	S/L	1,552	0
89	Billy Goat	8/30/01	1,137				1,137	5	MO	S/L	1,137	0
90	Mule	1/23/03	11,256				11,256	5	MO	S/L	11,256	0
91	Shed	12/06/02	1,669				1,669	5	MO	S/L	1,669	0
92	Shed	1/03/03	822				822	5	MO	S/L	822	0
93	Floor Machine	6/17/04	2,708				2,708	5	MO	S/L	2,708	0
94	Land	5/01/80	252,019				252,019	0	--	Land	0	0
95	Chairs, Lamps, Coffee Sets	8/25/09	0				0	0	HY		0	0
96	Charis & Lamps	11/19/09	0				0	0	HY		0	0
97	Coffee Tables, End Tables, Lamps & Side (	2/17/10	0				0	0	HY		0	0
99	Muratec Copier	4/14/09	0				0	0	HY		0	0
100	Dell Computer	4/29/09	0				0	0	HY		0	0
101	File Cabinet	8/12/09	0				0	0	HY		0	0
102	Snow Blower	11/18/09	0				0	0	HY		0	0
103	Rails	7/28/10	6,156				6,156	15	MO	S/L	3,967	411
104	Handicap Ramp	7/28/10	3,217				3,217	15	MO	S/L	2,073	215
105	Curbs	8/16/10	5,813				5,813	15	MO	S/L	3,714	387
106	Sofa and Loveseat	11/27/10	899				899	5	MO	S/L	899	0
107	Security Cameras	3/29/11	36,291				36,291	5	MO	S/L	36,291	0
108	Trailor	8/06/10	5,963				5,963	5	MO	S/L	5,963	0
109	New Curbs	1/28/12	1,291				1,291	15	MO	S/L	703	86
110	Parking Lot Improvements	9/12/11	484,550				484,550	15	MO	S/L	277,270	32,304
111	Furniture	6/21/11	538				538	7	MO	S/L	538	0
112	Sofa	7/26/11	966				966	7	MO	S/L	966	0
113	Sofa	8/17/11	538				538	7	MO	S/L	538	0
114	Tables and Chairs	10/26/11	405				405	7	MO	S/L	405	0
115	Chairs	3/02/12	207				207	7	MO	S/L	207	0
116	DVD Upgrade	5/27/11	568				568	5	MO	S/L	568	0
117	File Cabinet	3/12/12	590				590	7	MO	S/L	590	0
118	Dell Computer	3/27/12	1,995				1,995	5	MO	S/L	1,995	0
119	Pressure Washer	6/29/11	512				512	5	MO	S/L	512	0
120	Steps	4/11/12	20,322				20,322	15	MO	S/L	10,838	1,355
121	Steps	10/24/12	307				307	15	MO	S/L	152	20
123	Parking Lot Improvements	5/21/12	11,500				11,500	15	MO	S/L	6,006	766
124	Vacuum	7/30/12	393				393	5	MO	S/L	393	0
125	Quickbooks	8/04/12	2,888				2,888	5	MO	S/L	2,888	0
126	Cab Kit	9/09/12	2,783				2,783	5	MO	S/L	2,783	0
127	Tires	9/09/12	558				558	5	MO	S/L	558	0
129	Roofing	1/21/13	294,873				294,873	15	MO	S/L	140,884	19,658
131	Love Seat, Sofa and 6 Kitchen Chairs	6/09/14	1,240				1,240	7	MO	S/L	1,033	177
133	Sofa, Love Seat & Chairs	4/27/16	1,174				1,174	7	MO	S/L	657	168
134	Water Heater	4/13/16	0				0	0	HY		0	0
135	Water Heater - Laundry	6/02/16	0				0	0	HY		0	0
136	Interior/Exterior Repairs	8/04/17	30,644				30,644	15	MO	S/L	5,448	2,043
137	Water Heater Bldng 7	1/05/18	7,838				7,838	5	MO	S/L	3,527	1,567
138	Phone System ESI 50	4/06/18	2,495				2,495	5	MO	S/L	998	499
139	Office Computers	5/08/19	1,229				1,229	5	MO	S/L	225	246
140	Balcony Repair	7/27/19	6,562				6,562	15	MO	S/L	292	437
141	Balcony Repair	1/23/20	62,000				62,000	15	MO	S/L	689	4,133
142	Balcony Repair	3/23/20	24,187				24,187	15	MO	S/L	0	1,612
143	New Security Camera System	9/01/19	34,201				34,201	5	MO	S/L	3,990	6,840
144	Quality Carpet	8/26/20	27,300				27,300	15	MO	S/L	0	1,062
145	Bathroom repair	5/20/20	8,423				8,423	15	MO	S/L	0	468
147	Bathroom repair Building 5	8/17/20	10,079				10,079	15	MO	S/L	0	392
148	Building 2 bathroom repair	1/05/21	12,438				12,438	15	MO	S/L	0	207
149	Bathroom repair	7/16/20	28,171				28,171	15	MO	S/L	0	1,252
151	Computer	7/16/20	920				920	5	MO	S/L	0	123
152	Computer	8/07/20	1,223				1,223	5	MO	S/L	0	163
153	Golf Cars	8/19/20	5,040				5,040	5	MO	S/L	0	588
154	Kawasaki Yamaha Car	8/27/20	14,622				14,622	5	MO	S/L	0	1,706
	Total Other Depreciation		4,625,290				4,625,290				3,717,446	86,631
	Total ACRS and Other Depreciation		4,625,290				4,625,290				3,717,446	86,631

AMT Asset Report

Form 990, Page 1

Asset	Description	Date In Service	Cost	Bus %	Sec 179 Bonus	Basis for Depr	Per	Conv	Meth	Prior	Current
	Grand Totals		4,767,722			4,767,722				3,740,537	91,811
	Less: Dispositions and Transfers		0			0				0	0
	Net Grand Totals		4,767,722			4,767,722				3,740,537	91,811

Depreciation Adjustment Report
All Business Activities

Form	Unit	Asset	Description	Tax	AMT	AMT Adjustments/ Preferences
MACRS Adjustments:						
Page 1	1	132	Sewer Line Replacement	5,180	5,180	0
				5,180	5,180	0

Asset	Description	Date In Service	Cost	Tax	AMT
Prior MACRS:					
132	Sewer Line Replacement	10/31/15	142,432	5,179	5,179
			142,432	5,179	5,179
Other Depreciation:					
1	Fully Depreciated Improvements	1/01/80	195,270	0	0
2	Earthwork	5/01/80	68,414	0	0
3	Site Improvements	5/01/80	10,210	0	0
4	Trees	10/01/87	2,045	0	0
5	Speed Bumps	10/10/89	1,120	0	0
6	Concrete	8/09/91	4,436	0	0
7	Concrete	8/21/95	29,650	0	0
9	Walkways	7/29/99	6,168	0	0
10	Walkways	2/28/01	11,965	0	0
11	Walkways & Ramps	10/01/01	12,339	0	0
13	Walkways	10/01/02	6,770	0	0
14	Landscaping	10/01/02	5,269	0	0
15	Fencing	8/05/02	1,458	0	0
16	Walkways	8/15/03	7,658	0	0
18	Walkways	9/01/05	17,204	0	0
20	Walkways	8/01/06	4,419	98	98
21	Walkways	7/01/07	12,917	861	861
22	Walkways	3/01/08	4,665	311	311
23	Fully Depreciated Buildings	1/01/80	6,465	0	0
24	Buildings	5/01/80	1,677,085	0	0
25	Constr. Period Int.	5/01/80	103,655	0	0
26	Roofing	12/02/91	7,565	0	0
27	Roofing	3/01/95	30,560	0	0
28	Handicap Ramps	12/01/94	8,816	0	0
29	Plumbing	12/01/94	14,447	0	0
30	Roofing	3/31/95	27,000	0	0
31	Building Repair	3/31/95	2,150	0	0
32	Concrete Steps	3/13/98	679	0	0
33	Handicap Ramps	7/29/99	6,070	0	0
34	Handicap Railings	9/01/99	1,700	0	0
35	Handicap Ramps	2/28/01	6,131	0	0
36	Handicap Ramps & Patio	11/01/01	8,766	0	0
37	Handicap Railings	4/09/01	1,526	0	0
38	Balcony Repair	11/01/01	8,300	0	0
39	Tile	7/15/01	4,450	0	0
40	Signs	10/01/01	3,417	0	0
41	Paint Exterior	11/01/01	110,994	0	0
42	Shower Tub	6/06/01	1,450	0	0
43	Tile	2/01/04	6,723	0	0
44	Trim	10/01/03	17,780	0	0
45	Concrete Steps	3/07/05	1,619	0	0
46	Tile	3/01/05	2,669	0	0
47	Paint Trim	8/28/06	24,699	685	685
48	Concrete Steps	7/09/07	2,283	152	152
49	Fully Depreciated Buildings Equipment Fixed	1/01/80	414,971	0	0
50	Rec. Bldg	6/04/99	3,650	0	0
51	Hot Water Heater	12/21/01	2,560	0	0
52	Lights	7/23/02	2,748	0	0
53	Water Heaters	6/18/03	2,182	0	0
54	Pump	3/04/04	772	0	0
62	Appliances	10/01/04	35,781	0	0
63	Appliances	10/01/05	32,070	0	0
64	Appliances	10/01/06	26,630	0	0
65	Appliances	10/01/07	19,763	0	0
66	Appliances	10/01/07	6,148	0	0
68	Filing Cabinets	3/14/01	834	0	0
69	Upholstry Chairs	3/28/01	2,074	0	0
80	Carpet	10/01/04	30,889	0	0
81	Furniture	2/01/05	5,354	0	0
82	Flooring	10/01/05	42,799	0	0

Asset	Description	Date In Service	Cost	Tax	AMT
83	Furniture (C/A)	10/01/05	16,650	0	0
84	Flooring	10/01/06	32,750	0	0
85	Flooring	10/01/07	17,347	0	0
86	Flooring	10/01/07	5,270	0	0
88	Shed	12/12/00	1,552	0	0
89	Billy Goat	8/30/01	1,137	0	0
90	Mule	1/23/03	11,256	0	0
91	Shed	12/06/02	1,669	0	0
92	Shed	1/03/03	822	0	0
93	Floor Machine	6/17/04	2,708	0	0
94	Land	5/01/80	252,019	0	0
95	Chairs, Lamps, Coffee Sets	8/25/09	696	0	0
96	Charis & Lamps	11/19/09	421	0	0
97	Coffee Tables, End Tables, Lamps & Side Chair	2/17/10	1,203	0	0
99	Muratec Copier	4/14/09	5,363	0	0
100	Dell Computer	4/29/09	737	0	0
101	File Cabinet	8/12/09	623	0	0
102	Snow Blower	11/18/09	645	0	0
103	Rails	7/28/10	6,156	410	410
104	Handicap Ramp	7/28/10	3,217	214	214
105	Curbs	8/16/10	5,813	388	388
106	Sofa and Loveseat	11/27/10	899	0	0
107	Security Cameras	3/29/11	36,291	0	0
108	Trailor	8/06/10	5,963	0	0
109	New Curbs	1/28/12	1,291	86	86
110	Parking Lot Improvements	9/12/11	484,550	32,303	32,303
111	Furniture	6/21/11	538	0	0
112	Sofa	7/26/11	966	0	0
113	Sofa	8/17/11	538	0	0
114	Tables and Chairs	10/26/11	405	0	0
115	Chairs	3/02/12	207	0	0
116	DVD Upgrade	5/27/11	568	0	0
117	File Cabinet	3/12/12	590	0	0
118	Dell Computer	3/27/12	1,995	0	0
119	Pressure Washer	6/29/11	512	0	0
120	Steps	4/11/12	20,322	1,355	1,355
121	Steps	10/24/12	307	21	21
123	Parking Lot Improvements	5/21/12	11,500	767	767
124	Vacuum	7/30/12	393	0	0
125	Quickbooks	8/04/12	2,888	0	0
126	Cab Kit	9/09/12	2,783	0	0
127	Tires	9/09/12	558	0	0
129	Roofing	1/21/13	294,873	19,658	19,658
131	Love Seat, Sofa and 6 Kitchen Chairs	6/09/14	1,240	30	30
133	Sofa, Love Seat & Chairs	4/27/16	1,174	167	167
134	Water Heater	4/13/16	2,229	0	0
135	Water Heater - Laundry	6/02/16	4,553	152	0
136	Interior/Exterior Repairs	8/04/17	30,644	2,043	2,043
137	Water Heater Bldng 7	1/05/18	7,838	1,568	1,568
138	Phone System ESI 50	4/06/18	2,495	499	499
139	Office Computers	5/08/19	1,229	246	246
140	Balcony Repair	7/27/19	6,562	438	438
141	Balcony Repair	1/23/20	62,000	4,134	4,134
142	Balcony Repair	3/23/20	24,187	1,613	1,613
143	New Security Camera System	9/01/19	34,201	6,841	6,841
144	Quality Carpet	8/26/20	27,300	1,820	1,820
145	Bathroom repair	5/20/20	8,423	561	561
147	Bathroom repair Building 5	8/17/20	10,079	672	672
148	Building 2 bathroom repair	1/05/21	12,438	830	830
149	Bathroom repair	7/16/20	28,171	1,878	1,878
151	Computer	7/16/20	920	184	184
152	Computer	8/07/20	1,223	245	245
153	Golf Cars	8/19/20	5,040	1,008	1,008
154	Kawasaki Yamaha Car	8/27/20	14,622	2,924	2,924
	Total Other Depreciation		4,641,760	85,162	85,010
	Total ACRS and Other Depreciation		4,641,760	85,162	85,010

Asset	Description	Date In Service	Cost	Tax	AMT
	Grand Totals		4,784,192	90,341	90,189

Form **990**

Two Year Comparison Report

For calendar year 2020, or tax year beginning 04/01/20 , ending 03/31/21

2019 & 2020

Name

NORTHERN NEVADA BUILDING & CONSTRUC TRADES COUNCIL DEVELOPMENT CORP

Taxpayer Identification Number

88-0176297

			2019	2020	Differences
Revenue	1. Contributions, gifts, grants	1.			
	2. Membership dues and assessments	2.			
	3. Government contributions and grants	3.	990,862	1,003,911	13,049
	4. Program service revenue	4.	388,310	448,401	60,091
	5. Investment income	5.	798	618	-180
	6. Proceeds from tax exempt bonds	6.			
	7. Net gain or (loss) from sale of assets other than inventory	7.			
	8. Net income or (loss) from fundraising events	8.			
	9. Net income or (loss) from gaming	9.			
	10. Net gain or (loss) on sales of inventory	10.			
	11. Other revenue	11.			
	12. **Total revenue.** Add lines 1 through 11	12.	1,379,970	1,452,930	72,960
Expenses	13. Grants and similar amounts paid	13.			
	14. Benefits paid to or for members	14.			
	15. Compensation of officers, directors, trustees, etc.	15.			
	16. Salaries, other compensation, and employee benefits	16.	357,033	376,825	19,792
	17. Professional fundraising fees	17.			
	18. Other professional fees	18.	139,992	139,992	
	19. Occupancy, rent, utilities, and maintenance	19.	628,264	546,639	-81,625
	20. Depreciation and Depletion	20.	120,927	91,549	-29,378
	21. Other expenses	21.	55,890	49,756	-6,134
	22. **Total expenses.** Add lines 13 through 21	22.	1,302,106	1,204,761	-97,345
	23. **Excess or (Deficit).** Subtract line 22 from line 12	23.	77,864	248,169	170,305
Other Information	24. Total exempt revenue	24.	1,379,970	1,452,930	72,960
	25. Total unrelated revenue	25.			
	26. Total excludable revenue	26.	389,108	449,019	59,911
	27. Total assets	27.	1,309,491	1,506,210	196,719
	28. Total liabilities	28.	102,786	51,336	-51,450
	29. Retained earnings	29.	1,206,705	1,454,874	248,169
	30. Number of voting members of governing body	30.	8	8	
	31. Number of independent voting members of governing body	31.	8	8	
	32. Number of employees	32.	7	11	
	33. Number of volunteers	33.	8	8	

Form **990** | **Tax Return History** | **2020**

Name: NORTHERN NEVADA BUILDING & CONSTRUC TRADES COUNCIL DEVELOPMENT CORP

Employer Identification Number: 88-0176297

	2016	2017	2018	2019	2020	2021
Contributions, gifts, grants	820,007	838,440	887,140	990,862	1,003,911	
Membership dues						
Program service revenue	266,483	304,675	375,907	388,310	448,401	
Capital gain or loss						
Investment income	170	264	368	798	618	
Fundraising revenue (income/loss)						
Gaming revenue (income/loss)						
Other revenue						
Total revenue	1,086,660	1,143,379	1,263,415	1,379,970	1,452,930	
Grants and similar amounts paid						
Benefits paid to or for members						
Compensation of officers, etc.						
Other compensation	347,271	353,211	389,552	357,033	376,825	
Professional fees	137,312	127,312	139,792	139,992	139,992	
Occupancy costs	494,459	582,413	537,092	628,264	546,639	
Depreciation and depletion	124,257	118,287	117,128	120,927	91,549	
Other expenses	68,934	119,879	74,888	55,890	49,756	
Total expenses	1,172,233	1,301,102	1,258,452	1,302,106	1,204,761	
Excess or (Deficit)	-85,573	-157,723	4,963	77,864	248,169	
Total exempt revenue	1,086,660	1,143,379	1,263,415	1,379,970	1,452,930	
Total unrelated revenue						
Total excludable revenue	266,653	304,939	376,275	389,108	449,019	
Total Assets	1,365,477	1,211,715	1,191,066	1,309,491	1,506,210	
Total Liabilities	83,873	87,836	62,225	102,786	51,336	
Net Fund Balances	1,281,604	1,123,879	1,128,841	1,206,705	1,454,874	

Federal Statements

Taxable Interest on Investments

Description	Amount	Unrelated Business	Exclusion Code	Postal Code	Acquired after 6/30/75	US Obs ($ or %)
INTEREST INCOME	$ 618					
TOTAL	$ 618					

Federal Statements

Schedule A, Part II, Line 1(e)

Description	Amount
RENT INCOME - HUD	$ 1,003,911
TOTAL	$ 1,003,911

Schedule A, Part II, Line 12 - Current year

Description	Amount
RENT INCOME - TENANTS	$ 486,825
LAUNDRY INCOME	4,474
VACANCIES	-85,645
TENANT CHARGES	11,762
LATE FEES	472
KEY CHARGES	466
DAMAGES	2,567
OTHER INCOME	27,480
INTEREST INCOME	618
TOTAL	$ 449,019

EXHIBIT 15E.2

NON-PROFIT FORMATION DOCUMENTS

Form 990 for tax year 2019

Forms 990 / 990-EZ Return Summary

For calendar year 2019, or tax year beginning 04/01/19 , and ending 03/31/20

Northern Nevada Building & Construc88-0176297
Trades Council Development Corp

Net Asset / Fund Balance at Beginning of Year			1,128,841
Revenue			
Contributions	990,862		
Program service revenue	388,310		
Investment income	798		
Capital gain / loss			
Fundraising / Gaming:			
Gross revenue			
Direct expenses			
Net income			
Other income	0		
Total revenue		1,379,970	
Expenses			
Program services	1,178,040		
Management and general	124,066		
Fundraising			
Total expenses		1,302,106	
Excess / (deficit)			77,864
Changes			
Net Asset / Fund Balance at End of Year			1,206,705

Reconciliation of Revenue

Total revenue per financial statements	1,379,970
Less:	
Unrealized gains	
Donated services	
Recoveries	
Other	
Plus:	
Investment expenses	
Other	
Total revenue per return	1,379,970

Reconciliation of Expenses

Total expenses per financial statements	1,302,106
Less:	
Donated services	
Prior year adjustments	
Losses	
Other	
Plus:	
Investment expenses	
Other	
Total expenses per return	1,302,106

Balance Sheet

	Beginning	Ending	Differences
Assets	1,191,066	1,309,491	
Liabilities	62,225	102,786	
Net assets	1,128,841	1,206,705	77,864

Miscellaneous Information

Amended return	
Return / extended due date	08/17/20
Failure to file penalty	

Form **8879-EO**

Department of the Treasury
Internal Revenue Service

IRS *e-file* Signature Authorization for an Exempt Organization

For calendar year 2019, or fiscal year beginning 4/01, 2019, and ending 3/31, 20 20

▶ **Do not send to the IRS. Keep for your records.**
▶ **Go to** *www.irs.gov/Form8879EO* **for the latest information.**

OMB No. 1545-1878

2019

Name of exempt organization	Employer identification number
Northern Nevada Building & Construc Trades Council Development Corp	88-0176297

Name and title of officer: Robert W. Bennar
Secretary/Treasurer

Part I Type of Return and Return Information (Whole Dollars Only)

Check the box for the return for which you are using this Form 8879-EO and enter the applicable amount, if any, from the return. If you check the box on line **1a, 2a, 3a, 4a,** or **5a,** below, and the amount on that line for the return being filed with this form was blank, then leave line **1b, 2b, 3b, 4b,** or **5b,** whichever is applicable, blank (do not enter -0-). But, if you entered -0- on the return, then enter -0- on the applicable line below. **Do not** complete more than one line in Part I.

1a	Form 990 check here ▶ [X]	b	**Total revenue,** if any (Form 990, Part VIII, column (A), line 12)	1b 1,379,970
2a	Form 990-EZ check here ▶ [ ]	b	**Total revenue,** if any (Form 990-EZ, line 9)	2b
3a	Form 1120-POL check here ▶ [ ]	b	**Total tax** (Form 1120-POL, line 22)	3b
4a	Form 990-PF check here ▶ [ ]	b	**Tax based on investment income** (Form 990-PF, Part VI, line 5)	4b
5a	Form 8868 check here ▶ [ ]	b	**Balance Due** (Form 8868, line 3c)	5b

Part II Declaration and Signature Authorization of Officer

Under penalties of perjury, I declare that I am an officer of the above organization and that I have examined a copy of the organization's 2019 electronic return and accompanying schedules and statements and to the best of my knowledge and belief, they are true, correct, and complete. I further declare that the amount in Part I above is the amount shown on the copy of the organization's electronic return. I consent to allow my intermediate service provider, transmitter, or electronic return originator (ERO) to send the organization's return to the IRS and to receive from the IRS **(a)** an acknowledgement of receipt or reason for rejection of the transmission, **(b)** the reason for any delay in processing the return or refund, and **(c)** the date of any refund. If applicable, I authorize the U.S. Treasury and its designated Financial Agent to initiate an electronic funds withdrawal (direct debit) entry to the financial institution account indicated in the tax preparation software for payment of the organization's federal taxes owed on this return, and the financial institution to debit the entry to this account. To revoke a payment, I must contact the U.S. Treasury Financial Agent at 1-888-353-4537 no later than 2 business days prior to the payment (settlement) date. I also authorize the financial institutions involved in the processing of the electronic payment of taxes to receive confidential information necessary to answer inquiries and resolve issues related to the payment. I have selected a personal identification number (PIN) as my signature for the organization's electronic return and, if applicable, the organization's consent to electronic funds withdrawal.

Officer's PIN: check one box only

[X] I authorize Steele & Associates, LLC (ERO firm name) to enter my PIN 98657 as my signature
Enter five numbers, but do not enter all zeros

on the organization's tax year 2019 electronically filed return. If I have indicated within this return that a copy of the return is being filed with a state agency(ies) regulating charities as part of the IRS Fed/State program, I also authorize the aforementioned ERO to enter my PIN on the return's disclosure consent screen.

[ ] As an officer of the organization, I will enter my PIN as my signature on the organization's tax year 2019 electronically filed return. If I have indicated within this return that a copy of the return is being filed with a state agency(ies) regulating charities as part of the IRS Fed/State program, I will enter my PIN on the return's disclosure consent screen.

Officer's signature ▶ Date ▶ 08/13/20

Part III Certification and Authentication

ERO's EFIN/PIN. Enter your six-digit electronic filing identification number (EFIN) followed by your five-digit self-selected PIN. 88200912345
Do not enter all zeros

I certify that the above numeric entry is my PIN, which is my signature on the 2019 electronically filed return for the organization indicated above. I confirm that I am submitting this return in accordance with the requirements of **Pub. 4163,** Modernized e-File (MeF) Information for Authorized IRS *e-file* Providers for Business Returns.

ERO's signature ▶ Jonathan S. Steele, CPA, CGMA Date ▶ 08/13/20

ERO Must Retain This Form — See Instructions
Do Not Submit This Form to the IRS Unless Requested To Do So

For Paperwork Reduction Act Notice, see back of form. Form **8879-EO** (2019)

DAA

Form **990** (Rev. January 2020)
Department of the Treasury
Internal Revenue Service

Return of Organization Exempt From Income Tax

Under section 501(c), 527, or 4947(a)(1) of the Internal Revenue Code (except private foundations)

▶ Do not enter social security numbers on this form as it may be made public.

▶ Go to *www.irs.gov/Form990* for instructions and the latest information.

OMB No. 1545-0047

2019

Open to Public Inspection

A For the 2019 calendar year, or tax year beginning 04/01/19 , and ending 03/31/20

B Check if applicable:
- ☐ Address change
- ☐ Name change
- ☐ Initial return
- ☐ Final return/ terminated
- ☐ Amended return
- ☐ Application pending

C Name of organization: Northern Nevada Building & Construc Trades Council Development Corp

Doing business as: Carville Park Apartments

Number and street (or P.O. box if mail is not delivered to street address): 1819 Hymer Avenue #106

Room/suite:

City or town, state or province, country, and ZIP or foreign postal code: Sparks NV 89431

D Employer identification number: 88-0176297

E Telephone number: 775-355-9200

G Gross receipts$ 1,379,970

F Name and address of principal officer:
Russ James
1819 Hymer Ave Ste 106
Sparks NV 89431

H(a) Is this a group return for subordinates? ☐ Yes ☒ No

H(b) Are all subordinates included? ☐ Yes ☐ No

If "No," attach a list. (see instructions)

I Tax-exempt status: ☒ 501(c)(3) ☐ 501(c) ( ) ◀ (insert no.) ☐ 4947(a)(1) or ☐ 527

J Website: ▶ N/A

H(c) Group exemption number ▶

K Form of organization: ☒ Corporation ☐ Trust ☐ Association ☐ Other ▶

L Year of formation: 1979

M State of legal domicile: NV

Part I Summary

1 Briefly describe the organization's mission or most significant activities:
To Provide affordable housing for low-income, elderly, and disabled persons in a 208 unit apartment complex.

2 Check this box ▶ ☐ if the organization discontinued its operations or disposed of more than 25% of its net assets.

3	Number of voting members of the governing body (Part VI, line 1a)	3	8
4	Number of independent voting members of the governing body (Part VI, line 1b)	4	8
5	Total number of individuals employed in calendar year 2019 (Part V, line 2a)	5	7
6	Total number of volunteers (estimate if necessary)	6	8
7a	Total unrelated business revenue from Part VIII, column (C), line 12	7a	0
b	Net unrelated business taxable income from Form 990-T, line 39	7b	0

		Prior Year	Current Year
8	Contributions and grants (Part VIII, line 1h)	887,140	990,862
9	Program service revenue (Part VIII, line 2g)	375,907	388,310
10	Investment income (Part VIII, column (A), lines 3, 4, and 7d)	368	798
11	Other revenue (Part VIII, column (A), lines 5, 6d, 8c, 9c, 10c, and 11e)		0
12	Total revenue – add lines 8 through 11 (must equal Part VIII, column (A), line 12)	1,263,415	1,379,970
13	Grants and similar amounts paid (Part IX, column (A), lines 1–3)		0
14	Benefits paid to or for members (Part IX, column (A), line 4)		0
15	Salaries, other compensation, employee benefits (Part IX, column (A), lines 5–10)	389,552	357,033
16a	Professional fundraising fees (Part IX, column (A), line 11e)		0
b	Total fundraising expenses (Part IX, column (D), line 25) ▶ 0		
17	Other expenses (Part IX, column (A), lines 11a–11d, 11f–24e)	868,900	945,073
18	Total expenses. Add lines 13–17 (must equal Part IX, column (A), line 25)	1,258,452	1,302,106
19	Revenue less expenses. Subtract line 18 from line 12	4,963	77,864

		Beginning of Current Year	End of Year
20	Total assets (Part X, line 16)	1,191,066	1,309,491
21	Total liabilities (Part X, line 26)	62,225	102,786
22	Net assets or fund balances. Subtract line 21 from line 20	1,128,841	1,206,705

Part II Signature Block

Under penalties of perjury, I declare that I have examined this return, including accompanying schedules and statements, and to the best of my knowledge and belief, it is true, correct, and complete. Declaration of preparer (other than officer) is based on all information of which preparer has any knowledge.

Sign Here

▶ Signature of officer — Date

▶ Robert W. Bennar — Secretary/Treasurer

Type or print name and title

Paid Preparer Use Only

Print/Type preparer's name	Preparer's signature	Date	Check ☐ if self-employed	PTIN
Jonathan S. Steele, CPA, CGMA	Jonathan S. Steele, CPA, CGMA	08/11/22		P01362786

Firm's name ▶ Steele & Associates, LLC — Firm's EIN ▶ 88-0479248

Firm's address ▶ 611 N Nevada St, Carson City, NV 89703-3968 — Phone no. 775-882-7198

May the IRS discuss this return with the preparer shown above? (see instructions) ☒ Yes ☐ No

For Paperwork Reduction Act Notice, see the separate instructions. Form **990** (2019)

DAA

Part III **Statement of Program Service Accomplishments**

Check if Schedule O contains a response or note to any line in this Part III ☐

1 Briefly describe the organization's mission:

To Provide affordable housing for low-income, elderly, and disabled persons in a 208 unit apartment complex.

2 Did the organization undertake any significant program services during the year which were not listed on the prior Form 990 or 990-EZ? ☐ Yes ☒ No

If "Yes," describe these new services on Schedule O.

3 Did the organization cease conducting, or make significant changes in how it conducts, any program services? ☐ Yes ☒ No

If "Yes," describe these changes on Schedule O.

4 Describe the organization's program service accomplishments for each of its three largest program services, as measured by expenses. Section 501(c)(3) and 501(c)(4) organizations are required to report the amount of grants and allocations to others, the total expenses, and revenue, if any, for each program service reported.

4a (Code:) (Expenses $ 1,178,040 including grants of$) (Revenue $ 388,310)

Provided affordable housing for low-income, elderly, and disabled persons in a 208 unit apartment complex.

4b (Code:) (Expenses $ including grants of$) (Revenue $)

N/A

4c (Code:) (Expenses $ including grants of$) (Revenue $)

N/A

4d Other program services (Describe on Schedule O.)

(Expenses $ including grants of$) (Revenue $)

4e Total program service expenses ▶ 1,178,040

Part IV Checklist of Required Schedules

			Yes	No
1	Is the organization described in section 501(c)(3) or 4947(a)(1) (other than a private foundation)? *If "Yes," complete Schedule A*	1	X	
2	Is the organization required to complete *Schedule B, Schedule of Contributors* (see instructions)?	2		X
3	Did the organization engage in direct or indirect political campaign activities on behalf of or in opposition to candidates for public office? *If "Yes," complete Schedule C, Part I*	3		X
4	**Section 501(c)(3) organizations.** Did the organization engage in lobbying activities, or have a section 501(h) election in effect during the tax year? *If "Yes," complete Schedule C, Part II*	4		X
5	Is the organization a section 501(c)(4), 501(c)(5), or 501(c)(6) organization that receives membership dues, assessments, or similar amounts as defined in Revenue Procedure 98-19? *If "Yes," complete Schedule C, Part III*	5		X
6	Did the organization maintain any donor advised funds or any similar funds or accounts for which donors have the right to provide advice on the distribution or investment of amounts in such funds or accounts? *If "Yes," complete Schedule D, Part I*	6		X
7	Did the organization receive or hold a conservation easement, including easements to preserve open space, the environment, historic land areas, or historic structures? *If "Yes," complete Schedule D, Part II*	7		X
8	Did the organization maintain collections of works of art, historical treasures, or other similar assets? *If "Yes," complete Schedule D, Part III*	8		X
9	Did the organization report an amount in Part X, line 21, for escrow or custodial account liability, serve as a custodian for amounts not listed in Part X; or provide credit counseling, debt management, credit repair, or debt negotiation services? *If "Yes," complete Schedule D, Part IV*	9		X
10	Did the organization, directly or through a related organization, hold assets in donor-restricted endowments or in quasi endowments? *If "Yes," complete Schedule D, Part V*	10		X
11	If the organization's answer to any of the following questions is "Yes," then complete Schedule D, Parts VI, VII, VIII, IX, or X as applicable.			
a	Did the organization report an amount for land, buildings, and equipment in Part X, line 10? *If "Yes," complete Schedule D, Part VI*	11a	X	
b	Did the organization report an amount for investments—other securities in Part X, line 12, that is 5% or more of its total assets reported in Part X, line 16? *If "Yes," complete Schedule D, Part VII*	11b		X
c	Did the organization report an amount for investments—program related in Part X, line 13, that is 5% or more of its total assets reported in Part X, line 16? *If "Yes," complete Schedule D, Part VIII*	11c		X
d	Did the organization report an amount for other assets in Part X, line 15, that is 5% or more of its total assets reported in Part X, line 16? *If "Yes," complete Schedule D, Part IX*	11d		X
e	Did the organization report an amount for other liabilities in Part X, line 25? *If "Yes," complete Schedule D, Part X*	11e	X	
f	Did the organization's separate or consolidated financial statements for the tax year include a footnote that addresses the organization's liability for uncertain tax positions under FIN 48 (ASC 740)? *If "Yes," complete Schedule D, Part X*	11f	X	
12a	Did the organization obtain separate, independent audited financial statements for the tax year? *If "Yes," complete Schedule D, Parts XI and XII*	12a	X	
b	Was the organization included in consolidated, independent audited financial statements for the tax year? *If "Yes," and if the organization answered "No" to line 12a, then completing Schedule D, Parts XI and XII is optional*	12b		X
13	Is the organization a school described in section 170(b)(1)(A)(ii)? *If "Yes," complete Schedule E*	13		X
14a	Did the organization maintain an office, employees, or agents outside of the United States?	14a		X
b	Did the organization have aggregate revenues or expenses of more than $10,000 from grantmaking, fundraising, business, investment, and program service activities outside the United States, or aggregate foreign investments valued at $100,000 or more? *If "Yes," complete Schedule F, Parts I and IV*	14b		X
15	Did the organization report on Part IX, column (A), line 3, more than $5,000 of grants or other assistance to or for any foreign organization? *If "Yes," complete Schedule F, Parts II and IV*	15		X
16	Did the organization report on Part IX, column (A), line 3, more than $5,000 of aggregate grants or other assistance to or for foreign individuals? *If "Yes," complete Schedule F, Parts III and IV*	16		X
17	Did the organization report a total of more than $15,000 of expenses for professional fundraising services on Part IX, column (A), lines 6 and 11e? *If "Yes," complete Schedule G, Part I* (see instructions)	17		X
18	Did the organization report more than $15,000 total of fundraising event gross income and contributions on Part VIII, lines 1c and 8a? *If "Yes," complete Schedule G, Part II*	18		X
19	Did the organization report more than $15,000 of gross income from gaming activities on Part VIII, line 9a? *If "Yes," complete Schedule G, Part III*	19		X
20a	Did the organization operate one or more hospital facilities? *If "Yes," complete Schedule H*	20a		X
b	If "Yes" to line 20a, did the organization attach a copy of its audited financial statements to this return?	20b		
21	Did the organization report more than $5,000 of grants or other assistance to any domestic organization or domestic government on Part IX, column (A), line 1? *If "Yes," complete Schedule I, Parts I and II*	21		X

Part IV Checklist of Required Schedules *(continued)*

			Yes	No
22	Did the organization report more than $5,000 of grants or other assistance to or for domestic individuals on Part IX, column (A), line 2? *If "Yes," complete Schedule I, Parts I and III*	22		X
23	Did the organization answer "Yes" to Part VII, Section A, line 3, 4, or 5 about compensation of the organization's current and former officers, directors, trustees, key employees, and highest compensated employees? *If "Yes," complete Schedule J*	23		X
24a	Did the organization have a tax-exempt bond issue with an outstanding principal amount of more than $100,000 as of the last day of the year, that was issued after December 31, 2002? *If "Yes," answer lines 24b through 24d and complete Schedule K. If "No," go to line 25a*	24a		X
b	Did the organization invest any proceeds of tax-exempt bonds beyond a temporary period exception?	24b		
c	Did the organization maintain an escrow account other than a refunding escrow at any time during the year to defease any tax-exempt bonds?	24c		
d	Did the organization act as an "on behalf of" issuer for bonds outstanding at any time during the year?	24d		
25a	**Section 501(c)(3), 501(c)(4), and 501(c)(29) organizations.** Did the organization engage in an excess benefit transaction with a disqualified person during the year? *If "Yes," complete Schedule L, Part I*	25a		X
b	Is the organization aware that it engaged in an excess benefit transaction with a disqualified person in a prior year, and that the transaction has not been reported on any of the organization's prior Forms 990 or 990-EZ? *If "Yes," complete Schedule L, Part I*	25b		X
26	Did the organization report any amount on Part X, line 5 or 22, for receivables from or payables to any current or former officer, director, trustee, key employee, creator or founder, substantial contributor, or 35% controlled entity or family member of any of these persons? *If "Yes," complete Schedule L, Part II*	26		X
27	Did the organization provide a grant or other assistance to any current or former officer, director, trustee, key employee, creator or founder, substantial contributor or employee thereof, a grant selection committee member, or to a 35% controlled entity (including an employee thereof) or family member of any of these persons? *If "Yes," complete Schedule L, Part III*	27		X
28	Was the organization a party to a business transaction with one of the following parties (see Schedule L, Part IV instructions, for applicable filing thresholds, conditions, and exceptions):			
a	A current or former officer, director, trustee, key employee, creator or founder, or substantial contributor? *If "Yes," complete Schedule L, Part IV*	28a		X
b	A family member of any individual described in line 28a? *If "Yes," complete Schedule L, Part IV*	28b		X
c	A 35% controlled entity of one or more individuals and/or organizations described in lines 28a or 28b? *If "Yes," complete Schedule L, Part IV*	28c	X	
29	Did the organization receive more than $25,000 in non-cash contributions? *If "Yes," complete Schedule M*	29		X
30	Did the organization receive contributions of art, historical treasures, or other similar assets, or qualified conservation contributions? *If "Yes," complete Schedule M*	30		X
31	Did the organization liquidate, terminate, or dissolve and cease operations? *If "Yes," complete Schedule N, Part I*	31		X
32	Did the organization sell, exchange, dispose of, or transfer more than 25% of its net assets? *If "Yes," complete Schedule N, Part II*	32		X
33	Did the organization own 100% of an entity disregarded as separate from the organization under Regulations sections 301.7701-2 and 301.7701-3? *If "Yes," complete Schedule R, Part I*	33		X
34	Was the organization related to any tax-exempt or taxable entity? *If "Yes," complete Schedule R, Part II, III, or IV, and Part V, line 1*	34		X
35a	Did the organization have a controlled entity within the meaning of section 512(b)(13)?	35a		X
b	If "Yes" to line 35a, did the organization receive any payment from or engage in any transaction with a controlled entity within the meaning of section 512(b)(13)? *If "Yes," complete Schedule R, Part V, line 2*	35b		
36	**Section 501(c)(3) organizations.** Did the organization make any transfers to an exempt non-charitable related organization? *If "Yes," complete Schedule R, Part V, line 2*	36		X
37	Did the organization conduct more than 5% of its activities through an entity that is not a related organization and that is treated as a partnership for federal income tax purposes? *If "Yes," complete Schedule R, Part VI*	37		X
38	Did the organization complete Schedule O and provide explanations in Schedule O for Part VI, lines 11b and 19? **Note:** All Form 990 filers are required to complete Schedule O.	38	X	

Part V Statements Regarding Other IRS Filings and Tax Compliance

Check if Schedule O contains a response or note to any line in this Part V ☐

				Yes	No
1a	Enter the number reported in Box 3 of Form 1096. Enter -0- if not applicable	1a	1		
b	Enter the number of Forms W-2G included in line 1a. Enter -0- if not applicable	1b	0		
c	Did the organization comply with backup withholding rules for reportable payments to vendors and reportable gaming (gambling) winnings to prize winners?	1c			

Part V Statements Regarding Other IRS Filings and Tax Compliance *(continued)*

			Yes	No
2a	Enter the number of employees reported on Form W-3, Transmittal of Wage and Tax Statements, filed for the calendar year ending with or within the year covered by this return 2a 7			
b	If at least one is reported on line 2a, did the organization file all required federal employment tax returns?	2b	X	
	Note: If the sum of lines 1a and 2a is greater than 250, you may be required to *e-file* (see instructions)			
3a	Did the organization have unrelated business gross income of $1,000 or more during the year?	3a		X
b	If "Yes," has it filed a Form 990-T for this year? *If "No" to line 3b, provide an explanation on Schedule O*	3b		
4a	At any time during the calendar year, did the organization have an interest in, or a signature or other authority over, a financial account in a foreign country (such as a bank account, securities account, or other financial account)?	4a		X
b	If "Yes," enter the name of the foreign country ▶ See instructions for filing requirements for FinCEN Form 114, Report of Foreign Bank and Financial Accounts (FBAR).			
5a	Was the organization a party to a prohibited tax shelter transaction at any time during the tax year?	5a		X
b	Did any taxable party notify the organization that it was or is a party to a prohibited tax shelter transaction?	5b		X
c	If "Yes" to line 5a or 5b, did the organization file Form 8886-T?	5c		
6a	Does the organization have annual gross receipts that are normally greater than $100,000, and did the organization solicit any contributions that were not tax deductible as charitable contributions?	6a		X
b	If "Yes," did the organization include with every solicitation an express statement that such contributions or gifts were not tax deductible?	6b		
7	**Organizations that may receive deductible contributions under section 170(c).**			
a	Did the organization receive a payment in excess of $75 made partly as a contribution and partly for goods and services provided to the payor?	7a		
b	If "Yes," did the organization notify the donor of the value of the goods or services provided?	7b		
c	Did the organization sell, exchange, or otherwise dispose of tangible personal property for which it was required to file Form 8282?	7c		
d	If "Yes," indicate the number of Forms 8282 filed during the year 7d			
e	Did the organization receive any funds, directly or indirectly, to pay premiums on a personal benefit contract?	7e		
f	Did the organization, during the year, pay premiums, directly or indirectly, on a personal benefit contract?	7f		
g	If the organization received a contribution of qualified intellectual property, did the organization file Form 8899 as required?	7g		
h	If the organization received a contribution of cars, boats, airplanes, or other vehicles, did the organization file a Form 1098-C?	7h		
8	**Sponsoring organizations maintaining donor advised funds.** Did a donor advised fund maintained by the sponsoring organization have excess business holdings at any time during the year?	8		
9	**Sponsoring organizations maintaining donor advised funds.**			
a	Did the sponsoring organization make any taxable distributions under section 4966?	9a		
b	Did the sponsoring organization make a distribution to a donor, donor advisor, or related person?	9b		
10	**Section 501(c)(7) organizations.** Enter:			
a	Initiation fees and capital contributions included on Part VIII, line 12 10a			
b	Gross receipts, included on Form 990, Part VIII, line 12, for public use of club facilities 10b			
11	**Section 501(c)(12) organizations.** Enter:			
a	Gross income from members or shareholders 11a			
b	Gross income from other sources (Do not net amounts due or paid to other sources against amounts due or received from them.) 11b			
12a	**Section 4947(a)(1) non-exempt charitable trusts.** Is the organization filing Form 990 in lieu of Form 1041?	12a		
b	If "Yes," enter the amount of tax-exempt interest received or accrued during the year 12b			
13	**Section 501(c)(29) qualified nonprofit health insurance issuers.**			
a	Is the organization licensed to issue qualified health plans in more than one state? **Note:** See the instructions for additional information the organization must report on Schedule O.	13a		
b	Enter the amount of reserves the organization is required to maintain by the states in which the organization is licensed to issue qualified health plans 13b			
c	Enter the amount of reserves on hand 13c			
14a	Did the organization receive any payments for indoor tanning services during the tax year?	14a		X
b	If "Yes," has it filed a Form 720 to report these payments? *If "No," provide an explanation on Schedule O*	14b		
15	Is the organization subject to the section 4960 tax on payment(s) of more than $1,000,000 in remuneration or excess parachute payment(s) during the year? If "Yes," see instructions and file Form 4720, Schedule N.	15		X
16	Is the organization an educational institution subject to the section 4968 excise tax on net investment income? If "Yes," complete Form 4720, Schedule O.	16		X

Part VI Governance, Management, and Disclosure *For each "Yes" response to lines 2 through 7b below, and for a "No" response to line 8a, 8b, or 10b below, describe the circumstances, processes, or changes on Schedule O. See instructions.*

Check if Schedule O contains a response or note to any line in this Part VI ..... [X]

Section A. Governing Body and Management

				Yes	No
1a	Enter the number of voting members of the governing body at the end of the tax year	1a	8		
	If there are material differences in voting rights among members of the governing body, or if the governing body delegated broad authority to an executive committee or similar committee, explain on Schedule O.				
b	Enter the number of voting members included on line 1a, above, who are independent	1b	8		
2	Did any officer, director, trustee, or key employee have a family relationship or a business relationship with any other officer, director, trustee, or key employee?	2			X
3	Did the organization delegate control over management duties customarily performed by or under the direct supervision of officers, directors, trustees, or key employees to a management company or other person?	3			X
4	Did the organization make any significant changes to its governing documents since the prior Form 990 was filed?	4			X
5	Did the organization become aware during the year of a significant diversion of the organization's assets?	5			X
6	Did the organization have members or stockholders?	6			X
7a	Did the organization have members, stockholders, or other persons who had the power to elect or appoint one or more members of the governing body?	7a			X
b	Are any governance decisions of the organization reserved to (or subject to approval by) members, stockholders, or persons other than the governing body?	7b			X
8	Did the organization contemporaneously document the meetings held or written actions undertaken during the year by the following:				
a	The governing body?	8a		X	
b	Each committee with authority to act on behalf of the governing body?	8b		X	
9	Is there any officer, director, trustee, or key employee listed in Part VII, Section A, who cannot be reached at the organization's mailing address? *If "Yes," provide the names and addresses on Schedule O*	9			X

Section B. Policies *(This Section B requests information about policies not required by the Internal Revenue Code.)*

			Yes	No
10a	Did the organization have local chapters, branches, or affiliates?	10a		X
b	If "Yes," did the organization have written policies and procedures governing the activities of such chapters, affiliates, and branches to ensure their operations are consistent with the organization's exempt purposes?	10b		
11a	Has the organization provided a complete copy of this Form 990 to all members of its governing body before filing the form?	11a		X
b	Describe in Schedule O the process, if any, used by the organization to review this Form 990.			
12a	Did the organization have a written conflict of interest policy? *If "No," go to line 13*	12a		X
b	Were officers, directors, or trustees, and key employees required to disclose annually interests that could give rise to conflicts?	12b		
c	Did the organization regularly and consistently monitor and enforce compliance with the policy? *If "Yes," describe in Schedule O how this was done*	12c		
13	Did the organization have a written whistleblower policy?	13		X
14	Did the organization have a written document retention and destruction policy?	14	X	
15	Did the process for determining compensation of the following persons include a review and approval by independent persons, comparability data, and contemporaneous substantiation of the deliberation and decision?			
a	The organization's CEO, Executive Director, or top management official	15a		X
b	Other officers or key employees of the organization	15b	X	
	If "Yes" to line 15a or 15b, describe the process in Schedule O (see instructions).			
16a	Did the organization invest in, contribute assets to, or participate in a joint venture or similar arrangement with a taxable entity during the year?	16a		X
b	If "Yes," did the organization follow a written policy or procedure requiring the organization to evaluate its participation in joint venture arrangements under applicable federal tax law, and take steps to safeguard the organization's exempt status with respect to such arrangements?	16b		

Section C. Disclosure

17 List the states with which a copy of this Form 990 is required to be filed ▶ None

18 Section 6104 requires an organization to make its Forms 1023 (1024 or 1024-A, if applicable), 990, and 990-T (Section 501(c)(3)s only) available for public inspection. Indicate how you made these available. Check all that apply.

☐ Own website ☐ Another's website ☒ Upon request ☐ Other *(explain on Schedule O)*

19 Describe on Schedule O whether (and if so, how) the organization made its governing documents, conflict of interest policy, and financial statements available to the public during the tax year.

20 State the name, address, and telephone number of the person who possesses the organization's books and records ▶

No. Nevada Building & Construction 1819 Hymer Avenue, Suite 106
Sparks NV 89431 775-355-9200

Part VII Compensation of Officers, Directors, Trustees, Key Employees, Highest Compensated Employees, and Independent Contractors

Check if Schedule O contains a response or note to any line in this Part VII ☐

Section A. Officers, Directors, Trustees, Key Employees, and Highest Compensated Employees

1a Complete this table for all persons required to be listed. Report compensation for the calendar year ending with or within the organization's tax year.

- List all of the organization's **current** officers, directors, trustees (whether individuals or organizations), regardless of amount of compensation. Enter -0- in columns (D), (E), and (F) if no compensation was paid.
- List all of the organization's **current** key employees, if any. See instructions for definition of "key employee."
- List the organization's five **current** highest compensated employees (other than an officer, director, trustee, or key employee) who received reportable compensation (Box 5 of Form W-2 and/or Box 7 of Form 1099-MISC) of more than $100,000 from the organization and any related organizations.
- List all of the organization's **former** officers, key employees, and highest compensated employees who received more than $100,000 of reportable compensation from the organization and any related organizations.
- List all of the organization's **former directors or trustees** that received, in the capacity as a former director or trustee of the organization, more than $10,000 of reportable compensation from the organization and any related organizations.

See instructions for the order in which to list the persons above.

☒ Check this box if neither the organization nor any related organization compensated any current officer, director, or trustee.

(A) Name and title	(B) Average hours per week (list any hours for related organizations below dotted line)	(C) Position (do not check more than one box, unless person is both an officer and a director/trustee)						(D) Reportable compensation from the organization (W-2/1099-MISC)	(E) Reportable compensation from related organizations (W-2/1099-MISC)	(F) Estimated amount of other compensation from the organization and related organizations
		Individual trustee or director	Institutional trustee	Officer	Key employee	Highest compensated employee	Former			
(1) Robert W. Bennar Secretary/Treasurer	0.25 0.00	X		X				0	0	0
(2) Scott Fullerton Board Member	0.25 0.00	X						0	0	0
(3) Jacob Haas Board Member	0.25 0.00	X						0	0	0
(4) Tracy Holland Vice President	0.25 0.00	X		X				0	0	0
(5) Russ James President	0.25 0.00	X		X				0	0	0
(6) Eloy Jara Board Member	0.25 0.00	X						0	0	0
(7) Chris Robinson Board Member	0.25 0.00	X						0	0	0
(8) Gary Watson Board Member	0.25 0.00	X						0	0	0
(9)										
(10)										
(11)										

Part VII Section A. Officers, Directors, Trustees, Key Employees, and Highest Compensated Employees *(continued)*

(A) Name and title	(B) Average hours per week (list any hours for related organizations below dotted line)	(C) Position (do not check more than one box, unless person is both an officer and a director/trustee)						(D) Reportable compensation from the organization (W-2/1099-MISC)	(E) Reportable compensation from related organizations (W-2/1099-MISC)	(F) Estimated amount of other compensation from the organization and related organizations
		Individual trustee or director	Institutional trustee	Officer	Key employee	Highest compensated employee	Former			
1b Subtotal ▶										
c Total from continuation sheets to Part VII, Section A ▶										
d Total (add lines 1b and 1c) ▶										

2 Total number of individuals (including but not limited to those listed above) who received more than $100,000 of reportable compensation from the organization ▶0

		Yes	No
3	Did the organization list any **former** officer, director, trustee, key employee, or highest compensated employee on line 1a? *If "Yes," complete Schedule J for such individual*		X
4	For any individual listed on line 1a, is the sum of reportable compensation and other compensation from the organization and related organizations greater than $150,000? *If "Yes," complete Schedule J for such individual*		X
5	Did any person listed on line 1a receive or accrue compensation from any unrelated organization or individual for services rendered to the organization? *If "Yes," complete Schedule J for such person*		X

Section B. Independent Contractors

1 Complete this table for your five highest compensated independent contractors that received more than $100,000 of compensation from the organization. Report compensation for the calendar year ending with or within the organization's tax year.

(A) Name and business address	(B) Description of services	(C) Compensation

2 Total number of independent contractors (including but not limited to those listed above) who received more than $100,000 of compensation from the organization ▶ 0

Part VIII Statement of Revenue
Check if Schedule O contains a response or note to any line in this Part VIII ☐

				(A) Total revenue	(B) Related or exempt function revenue	(C) Unrelated business revenue	(D) Revenue excluded from tax under sections 512-514
Contributions, Gifts, Grants and Other Similar Amounts	1a Federated campaigns	1a					
	b Membership dues	1b					
	c Fundraising events	1c					
	d Related organizations	1d					
	e Government grants (contributions)	1e	990,862				
	f All other contributions, gifts, grants, and similar amounts not included above	1f					
	g Noncash contributions included in lines 1a-1f	1g	$				
	h **Total.** Add lines 1a–1f			990,862			
Program Service Revenue		Business Code					
	2a RENT INCOME - TENANTS	531110		460,978	460,978		
	b TENANT CHARGES	531110		10,405	10,405		
	c LAUNDRY INCOME	531110		4,615	4,615		
	d Late fees	531110		2,355	2,355		
	e Damages	531110		1,722	1,722		
	f All other program service revenue	531110		-91,765	-91,765		
	g **Total.** Add lines 2a–2f			388,310			
Other Revenue	3 Investment income (including dividends, interest, and other similar amounts)			798	798		
	4 Income from investment of tax-exempt bond proceeds						
	5 Royalties						
			(i) Real	(ii) Personal			
	6a Gross rents	6a					
	b Less: rental expenses	6b					
	c Rental inc. or (loss)	6c					
	d Net rental income or (loss)						
			(i) Securities	(ii) Other			
	7a Gross amount from sales of assets other than inventory	7a					
	b Less: cost or other basis and sales exps.	7b					
	c Gain or (loss)	7c					
	d Net gain or (loss)						
	8a Gross income from fundraising events (not including $ ..... of contributions reported on line 1c). See Part IV, line 18	8a					
	b Less: direct expenses	8b					
	c Net income or (loss) from fundraising events						
	9a Gross income from gaming activities. See Part IV, line 19	9a					
	b Less: direct expenses	9b					
	c Net income or (loss) from gaming activities						
	10a Gross sales of inventory, less returns and allowances	10a					
	b Less: cost of goods sold	10b					
	c Net income or (loss) from sales of inventory						
Miscellaneous Revenue		Business Code					
	11a						
	b						
	c						
	d All other revenue						
	e **Total.** Add lines 11a–11d						
	12 **Total revenue.** See instructions			1,379,970	389,108	0	0

Form **990** (2019)

DAA

Part IX Statement of Functional Expenses

Section 501(c)(3) and 501(c)(4) organizations must complete all columns. All other organizations must complete column (A).

Check if Schedule O contains a response or note to any line in this Part IX ☐

Do not include amounts reported on lines 6b, 7b, 8b, 9b, and 10b of Part VIII.	(A) Total expenses	(B) Program service expenses	(C) Management and general expenses	(D) Fundraising expenses
1 Grants and other assistance to domestic organizations and domestic governments. See Part IV, line 21				
2 Grants and other assistance to domestic individuals. See Part IV, line 22				
3 Grants and other assistance to foreign organizations, foreign governments, and foreign individuals. See Part IV, lines 15 and 16				
4 Benefits paid to or for members				
5 Compensation of current officers, directors, trustees, and key employees				
6 Compensation not included above to disqualified persons (as defined under section 4958(f)(1)) and persons described in section 4958(c)(3)(B)				
7 Other salaries and wages	256,625	212,247	44,378	
8 Pension plan accruals and contributions (include section 401(k) and 403(b) employer contributions)	31,540	31,540		
9 Other employee benefits	47,575	47,575		
10 Payroll taxes	21,293	21,293		
11 Fees for services (nonemployees):				
a Management	117,312	117,312		
b Legal				
c Accounting	22,680	12,480	10,200	
d Lobbying				
e Professional fundraising services. See Part IV, line 17				
f Investment management fees				
g Other. (If line 11g amount exceeds 10% of line 25, column (A) amount, list line 11g expenses on Schedule O.)				
12 Advertising and promotion	2,554	2,554		
13 Office expenses	36,669	36,669		
14 Information technology				
15 Royalties				
16 Occupancy	628,264	569,731	58,533	
17 Travel	648		648	
18 Payments of travel or entertainment expenses for any federal, state, or local public officials				
19 Conferences, conventions, and meetings				
20 Interest				
21 Payments to affiliates				
22 Depreciation, depletion, and amortization	120,927	120,927		
23 Insurance	5,712	5,712		
24 Other expenses. Itemize expenses not covered above (List miscellaneous expenses on line 24e. If line 24e amount exceeds 10% of line 25, column (A) amount, list line 24e expenses on Schedule O.)				
a CHARITABLE CONTRIBUTIONS	7,645		7,645	
b MISC TAXES, LICENSES & IN	2,164		2,164	
c CONTINUING EDUCATION	473		473	
d BANK SERVICES CHARGES	25		25	
e All other expenses				
25 **Total functional expenses.** Add lines 1 through 24e	1,302,106	1,178,040	124,066	0
26 **Joint costs.** Complete this line only if the organization reported in column (B) joint costs from a combined educational campaign and fundraising solicitation. Check here ▶ ☐ if following SOP 98-2 (ASC 958-720)				

Part X Balance Sheet

Check if Schedule O contains a response or note to any line in this Part X ☐

				(A) Beginning of year		(B) End of year
Assets	1	Cash—non-interest-bearing		89,232	1	172,820
	2	Savings and temporary cash investments		53,415	2	61,900
	3	Pledges and grants receivable, net		3,197	3	6,000
	4	Accounts receivable, net			4	
	5	Loans and other receivables from any current or former officer, director, trustee, key employee, creator or founder, substantial contributor, or 35% controlled entity or family member of any of these persons			5	
	6	Loans and other receivables from other disqualified persons (as defined under section 4958(f)(1)), and persons described in section 4958(c)(3)(B)			6	
	7	Notes and loans receivable, net		63,730	7	63,730
	8	Inventories for sale or use			8	
	9	Prepaid expenses and deferred charges		43,641	9	46,705
	10a	Land, buildings, and equipment: cost or other basis. Complete Part VI of Schedule D	10a 4,675,976			
	b	Less: accumulated depreciation	10b 3,748,134	920,590	10c	927,842
	11	Investments—publicly traded securities			11	
	12	Investments—other securities. See Part IV, line 11			12	
	13	Investments—program-related. See Part IV, line 11			13	
	14	Intangible assets			14	
	15	Other assets. See Part IV, line 11		17,261	15	30,494
	16	**Total assets.** Add lines 1 through 15 (must equal line 33)		1,191,066	16	1,309,491
Liabilities	17	Accounts payable and accrued expenses		19,233	17	56,852
	18	Grants payable			18	
	19	Deferred revenue		15,600	19	17,128
	20	Tax-exempt bond liabilities			20	
	21	Escrow or custodial account liability. Complete Part IV of Schedule D			21	
	22	Loans and other payables to any current or former officer, director, trustee, key employee, creator or founder, substantial contributor, or 35% controlled entity or family member of any of these persons			22	
	23	Secured mortgages and notes payable to unrelated third parties			23	
	24	Unsecured notes and loans payable to unrelated third parties			24	
	25	Other liabilities (including federal income tax, payables to related third parties, and other liabilities not included on lines 17-24). Complete Part X of Schedule D		27,392	25	28,806
	26	**Total liabilities.** Add lines 17 through 25		62,225	26	102,786
Net Assets or Fund Balances		**Organizations that follow FASB ASC 958, check here ☐ and complete lines 27, 28, 32, and 33.**				
	27	Net assets without donor restrictions			27	
	28	Net assets with donor restrictions			28	
		Organizations that do not follow FASB ASC 958, check here ▶ ☒ and complete lines 29 through 33.				
	29	Capital stock or trust principal, or current funds			29	
	30	Paid-in or capital surplus, or land, building, or equipment fund			30	
	31	Retained earnings, endowment, accumulated income, or other funds		1,128,841	31	1,206,705
	32	Total net assets or fund balances		1,128,841	32	1,206,705
	33	Total liabilities and net assets/fund balances		1,191,066	33	1,309,491

Form **990** (2019)

DAA

Part XI Reconciliation of Net Assets

Check if Schedule O contains a response or note to any line in this Part XI ☐

1	Total revenue (must equal Part VIII, column (A), line 12)	1	1,379,970
2	Total expenses (must equal Part IX, column (A), line 25)	2	1,302,106
3	Revenue less expenses. Subtract line 2 from line 1	3	77,864
4	Net assets or fund balances at beginning of year (must equal Part X, line 32, column (A))	4	1,128,841
5	Net unrealized gains (losses) on investments	5	
6	Donated services and use of facilities	6	
7	Investment expenses	7	
8	Prior period adjustments	8	
9	Other changes in net assets or fund balances (explain on Schedule O)	9	
10	Net assets or fund balances at end of year. Combine lines 3 through 9 (must equal Part X, line 32, column (B))	10	1,206,705

Part XII Financial Statements and Reporting

Check if Schedule O contains a response or note to any line in this Part XII ☐

			Yes	No
1	Accounting method used to prepare the Form 990: ☐ Cash ☒ Accrual ☐ Other_____ If the organization changed its method of accounting from a prior year or checked "Other," explain in Schedule O.			
2a	Were the organization's financial statements compiled or reviewed by an independent accountant? If "Yes," check a box below to indicate whether the financial statements for the year were compiled or reviewed on a separate basis, consolidated basis, or both: ☐ Separate basis ☐ Consolidated basis ☐ Both consolidated and separate basis	2a		X
b	Were the organization's financial statements audited by an independent accountant? If "Yes," check a box below to indicate whether the financial statements for the year were audited on a separate basis, consolidated basis, or both: ☐ Separate basis ☐ Consolidated basis ☐ Both consolidated and separate basis	2b	X	
c	If "Yes" to line 2a or 2b, does the organization have a committee that assumes responsibility for oversight of the audit, review, or compilation of its financial statements and selection of an independent accountant? If the organization changed either its oversight process or selection process during the tax year, explain on Schedule O.	2c	X	
3a	As a result of a federal award, was the organization required to undergo an audit or audits as set forth in the Single Audit Act and OMB Circular A-133?	3a		X
b	If "Yes," did the organization undergo the required audit or audits? If the organization did not undergo the required audit or audits, explain why on Schedule O and describe any steps taken to undergo such audits	3b		

SCHEDULE A (Form 990 or 990-EZ)

Department of the Treasury
Internal Revenue Service

Public Charity Status and Public Support

Complete if the organization is a section 501(c)(3) organization or a section 4947(a)(1) nonexempt charitable trust.

▶ Attach to Form 990 or Form 990-EZ.

▶ Go to *www.irs.gov/Form990* for instructions and the latest information.

OMB No. 1545-0047

2019

Open to Public Inspection

Name of the organization: Northern Nevada Building & Construc Trades Council Development Corp

Employer identification number: 88-0176297

Part I Reason for Public Charity Status (All organizations must complete this part.) See instructions.

The organization is not a private foundation because it is: (For lines 1 through 12, check only one box.)

1 ☐ A church, convention of churches, or association of churches described in **section 170(b)(1)(A)(i).**

2 ☐ A school described in **section 170(b)(1)(A)(ii).** (Attach Schedule E (Form 990 or 990-EZ).)

3 ☐ A hospital or a cooperative hospital service organization described in **section 170(b)(1)(A)(iii).**

4 ☐ A medical research organization operated in conjunction with a hospital described in **section 170(b)(1)(A)(iii).** Enter the hospital's name, city, and state:

5 ☐ An organization operated for the benefit of a college or university owned or operated by a governmental unit described in **section 170(b)(1)(A)(iv).** (Complete Part II.)

6 ☐ A federal, state, or local government or governmental unit described in **section 170(b)(1)(A)(v).**

7 ☒ An organization that normally receives a substantial part of its support from a governmental unit or from the general public described in **section 170(b)(1)(A)(vi).** (Complete Part II.)

8 ☐ A community trust described in **section 170(b)(1)(A)(vi).** (Complete Part II.)

9 ☐ An agricultural research organization described in **section 170(b)(1)(A)(ix)** operated in conjunction with a land-grant college or university or a non-land-grant college of agriculture (see instructions). Enter the name, city, and state of the college or university:

10 ☐ An organization that normally receives: (1) more than 33 1/3% of its support from contributions, membership fees, and gross receipts from activities related to its exempt functions—subject to certain exceptions, and (2) no more than 33 1/3% of its support from gross investment income and unrelated business taxable income (less section 511 tax) from businesses acquired by the organization after June 30, 1975. See **section 509(a)(2).** (Complete Part III.)

11 ☐ An organization organized and operated exclusively to test for public safety. See **section 509(a)(4).**

12 ☐ An organization organized and operated exclusively for the benefit of, to perform the functions of, or to carry out the purposes of one or more publicly supported organizations described in **section 509(a)(1)** or **section 509(a)(2).** See **section 509(a)(3).** Check the box in lines 12a through 12d that describes the type of supporting organization and complete lines 12e, 12f, and 12g.

a ☐ **Type I.** A supporting organization operated, supervised, or controlled by its supported organization(s), typically by giving the supported organization(s) the power to regularly appoint or elect a majority of the directors or trustees of the supporting organization. **You must complete Part IV, Sections A and B.**

b ☐ **Type II.** A supporting organization supervised or controlled in connection with its supported organization(s), by having control or management of the supporting organization vested in the same persons that control or manage the supported organization(s). **You must complete Part IV, Sections A and C.**

c ☐ **Type III functionally integrated.** A supporting organization operated in connection with, and functionally integrated with, its supported organization(s) (see instructions). **You must complete Part IV, Sections A, D, and E.**

d ☐ **Type III non-functionally integrated.** A supporting organization operated in connection with its supported organization(s) that is not functionally integrated. The organization generally must satisfy a distribution requirement and an attentiveness requirement (see instructions). **You must complete Part IV, Sections A and D, and Part V.**

e ☐ Check this box if the organization received a written determination from the IRS that it is a Type I, Type II, Type III functionally integrated, or Type III non-functionally integrated supporting organization.

f Enter the number of supported organizations

g Provide the following information about the supported organization(s).

(i) Name of supported organization	(ii) EIN	(iii) Type of organization (described on lines 1–10 above (see instructions))	(iv) Is the organization listed in your governing document? Yes	(iv) No	(v) Amount of monetary support (see instructions)	(vi) Amount of other support (see instructions)
(A)						
(B)						
(C)						
(D)						
(E)						
Total						

Schedule A (Form 990 or 990-EZ) 2019 Northern Nevada Building & Construc88-0176297

Part II **Support Schedule for Organizations Described in Sections 170(b)(1)(A)(iv) and 170(b)(1)(A)(vi)** (Complete only if you checked the box on line 5, 7, or 8 of Part I or if the organization failed to qualify under Part III. If the organization fails to qualify under the tests listed below, please complete Part III.)

Section A. Public Support

Calendar year (or fiscal year beginning in) ▶	(a) 2015	(b) 2016	(c) 2017	(d) 2018	(e) 2019	(f) Total
1 Gifts, grants, contributions, and membership fees received. (Do not include any "unusual grants.")	830,487	820,007	838,440	887,140	990,862	4,366,936
2 Tax revenues levied for the organization's benefit and either paid to or expended on its behalf						
3 The value of services or facilities furnished by a governmental unit to the organization without charge						
4 **Total.** Add lines 1 through 3	830,487	820,007	838,440	887,140	990,862	4,366,936
5 The portion of total contributions by each person (other than a governmental unit or publicly supported organization) included on line 1 that exceeds 2% of the amount shown on line 11, column (f)						
6 **Public support.** Subtract line 5 from line 4						4,366,936

Section B. Total Support

Calendar year (or fiscal year beginning in) ▶	(a) 2015	(b) 2016	(c) 2017	(d) 2018	(e) 2019	(f) Total
7 Amounts from line 4	830,487	820,007	838,440	887,140	990,862	4,366,936
8 Gross income from interest, dividends, payments received on securities loans, rents, royalties, and income from similar sources	164	170				334
9 Net income from unrelated business activities, whether or not the business is regularly carried on						
10 Other income. Do not include gain or loss from the sale of capital assets (Explain in Part VI.)						
11 **Total support.** Add lines 7 through 10						4,367,270
12 Gross receipts from related activities, etc. (see instructions)					12	1,070,322

13 **First five years.** If the Form 990 is for the organization's first, second, third, fourth, or fifth tax year as a section 501(c)(3) organization, check this box and **stop here** ▶ ☐

Section C. Computation of Public Support Percentage

14	Public support percentage for 2019 (line 6, column (f) divided by line 11, column (f))	14	99.99 %
15	Public support percentage from 2018 Schedule A, Part II, line 14	15	99.99 %

16a **33 1/3% support test—2019.** If the organization did not check the box on line 13, and line 14 is 33 1/3% or more, check this box and **stop here.** The organization qualifies as a publicly supported organization ▶ ☒

b **33 1/3% support test—2018.** If the organization did not check a box on line 13 or 16a, and line 15 is 33 1/3% or more, check this box and **stop here.** The organization qualifies as a publicly supported organization ▶ ☐

17a **10%-facts-and-circumstances test—2019.** If the organization did not check a box on line 13, 16a, or 16b, and line 14 is 10% or more, and if the organization meets the "facts-and-circumstances" test, check this box and **stop here.** Explain in Part VI how the organization meets the "facts-and-circumstances" test. The organization qualifies as a publicly supported organization ▶ ☐

b **10%-facts-and-circumstances test—2018.** If the organization did not check a box on line 13, 16a, 16b, or 17a, and line 15 is 10% or more, and if the organization meets the "facts-and-circumstances" test, check this box and **stop here.** Explain in Part VI how the organization meets the "facts-and-circumstances" test. The organization qualifies as a publicly supported organization ▶ ☐

18 **Private foundation.** If the organization did not check a box on line 13, 16a, 16b, 17a, or 17b, check this box and see instructions ▶ ☐

Part III Support Schedule for Organizations Described in Section 509(a)(2)
(Complete only if you checked the box on line 10 of Part I or if the organization failed to qualify under Part II. If the organization fails to qualify under the tests listed below, please complete Part II.)

Section A. Public Support

Calendar year (or fiscal year beginning in) ▶	(a) 2015	(b) 2016	(c) 2017	(d) 2018	(e) 2019	(f) Total
1 Gifts, grants, contributions, and membership fees received. (Do not include any "unusual grants.")						
2 Gross receipts from admissions, merchandise sold or services performed, or facilities furnished in any activity that is related to the organization's tax-exempt purpose						
3 Gross receipts from activities that are not an unrelated trade or business under section 513						
4 Tax revenues levied for the organization's benefit and either paid to or expended on its behalf						
5 The value of services or facilities furnished by a governmental unit to the organization without charge						
6 **Total.** Add lines 1 through 5						
7a Amounts included on lines 1, 2, and 3 received from disqualified persons						
b Amounts included on lines 2 and 3 received from other than disqualified persons that exceed the greater of $5,000 or 1% of the amount on line 13 for the year						
c Add lines 7a and 7b						
8 **Public support.** (Subtract line 7c from line 6.)						

Section B. Total Support

Calendar year (or fiscal year beginning in) ▶	(a) 2015	(b) 2016	(c) 2017	(d) 2018	(e) 2019	(f) Total
9 Amounts from line 6						
10a Gross income from interest, dividends, payments received on securities loans, rents, royalties, and income from similar sources						
b Unrelated business taxable income (less section 511 taxes) from businesses acquired after June 30, 1975						
c Add lines 10a and 10b						
11 Net income from unrelated business activities not included in line 10b, whether or not the business is regularly carried on						
12 Other income. Do not include gain or loss from the sale of capital assets (Explain in Part VI.)						
13 **Total support.** (Add lines 9, 10c, 11, and 12.)						

14 **First five years.** If the Form 990 is for the organization's first, second, third, fourth, or fifth tax year as a section 501(c)(3) organization, check this box and **stop here** ▶ ☐

Section C. Computation of Public Support Percentage

15	Public support percentage for 2019 (line 8, column (f), divided by line 13, column (f))	15	%
16	Public support percentage from 2018 Schedule A, Part III, line 15	16	%

Section D. Computation of Investment Income Percentage

17	Investment income percentage for **2019** (line 10c, column (f), divided by line 13, column (f))	17	%
18	Investment income percentage from **2018** Schedule A, Part III, line 17	18	%

19a **33 1/3% support tests—2019.** If the organization did not check the box on line 14, and line 15 is more than 33 1/3%, and line 17 is not more than 33 1/3%, check this box and **stop here.** The organization qualifies as a publicly supported organization ▶ ☐

b **33 1/3% support tests—2018.** If the organization did not check a box on line 14 or line 19a, and line 16 is more than 33 1/3%, and line 18 is not more than 33 1/3%, check this box and **stop here.** The organization qualifies as a publicly supported organization ▶ ☐

20 **Private foundation.** If the organization did not check a box on line 14, 19a, or 19b, check this box and see instructions ▶ ☐

Part IV Supporting Organizations

(Complete only if you checked a box in line 12 on Part I. If you checked 12a of Part I, complete Sections A and B. If you checked 12b of Part I, complete Sections A and C. If you checked 12c of Part I, complete Sections A, D, and E. If you checked 12d of Part I, complete Sections A and D, and complete Part V.)

Section A. All Supporting Organizations

			Yes	No
1	Are all of the organization's supported organizations listed by name in the organization's governing documents? *If "No," describe in Part VI how the supported organizations are designated. If designated by class or purpose, describe the designation. If historic and continuing relationship, explain.*	1		
2	Did the organization have any supported organization that does not have an IRS determination of status under section 509(a)(1) or (2)? *If "Yes," explain in Part VI how the organization determined that the supported organization was described in section 509(a)(1) or (2).*	2		
3a	Did the organization have a supported organization described in section 501(c)(4), (5), or (6)? *If "Yes," answer (b) and (c) below.*	3a		
b	Did the organization confirm that each supported organization qualified under section 501(c)(4), (5), or (6) and satisfied the public support tests under section 509(a)(2)? *If "Yes," describe in Part VI when and how the organization made the determination.*	3b		
c	Did the organization ensure that all support to such organizations was used exclusively for section 170(c)(2)(B) purposes? *If "Yes," explain in Part VI what controls the organization put in place to ensure such use.*	3c		
4a	Was any supported organization not organized in the United States ("foreign supported organization")? *If "Yes," and if you checked 12a or 12b in Part I, answer (b) and (c) below.*	4a		
b	Did the organization have ultimate control and discretion in deciding whether to make grants to the foreign supported organization? *If "Yes," describe in Part VI how the organization had such control and discretion despite being controlled or supervised by or in connection with its supported organizations.*	4b		
c	Did the organization support any foreign supported organization that does not have an IRS determination under sections 501(c)(3) and 509(a)(1) or (2)? *If "Yes," explain in Part VI what controls the organization used to ensure that all support to the foreign supported organization was used exclusively for section 170(c)(2)(B) purposes.*	4c		
5a	Did the organization add, substitute, or remove any supported organizations during the tax year? *If "Yes," answer (b) and (c) below (if applicable). Also, provide detail in Part VI, including (i) the names and EIN numbers of the supported organizations added, substituted, or removed; (ii) the reasons for each such action; (iii) the authority under the organization's organizing document authorizing such action; and (iv) how the action was accomplished (such as by amendment to the organizing document).*	5a		
b	**Type I or Type II only.** Was any added or substituted supported organization part of a class already designated in the organization's organizing document?	5b		
c	**Substitutions only.** Was the substitution the result of an event beyond the organization's control?	5c		
6	Did the organization provide support (whether in the form of grants or the provision of services or facilities) to anyone other than (i) its supported organizations, (ii) individuals that are part of the charitable class benefited by one or more of its supported organizations, or (iii) other supporting organizations that also support or benefit one or more of the filing organization's supported organizations? *If "Yes," provide detail in Part VI.*	6		
7	Did the organization provide a grant, loan, compensation, or other similar payment to a substantial contributor (as defined in section 4958(c)(3)(C)), a family member of a substantial contributor, or a 35% controlled entity with regard to a substantial contributor? *If "Yes," complete Part I of Schedule L (Form 990 or 990-EZ).*	7		
8	Did the organization make a loan to a disqualified person (as defined in section 4958) not described in line 7? *If "Yes," complete Part I of Schedule L (Form 990 or 990-EZ).*	8		
9a	Was the organization controlled directly or indirectly at any time during the tax year by one or more disqualified persons as defined in section 4946 (other than foundation managers and organizations described in section 509(a)(1) or (2))? *If "Yes," provide detail in Part VI.*	9a		
b	Did one or more disqualified persons (as defined in line 9a) hold a controlling interest in any entity in which the supporting organization had an interest? *If "Yes," provide detail in Part VI.*	9b		
c	Did a disqualified person (as defined in line 9a) have an ownership interest in, or derive any personal benefit from, assets in which the supporting organization also had an interest? *If "Yes," provide detail in Part VI.*	9c		
10a	Was the organization subject to the excess business holdings rules of section 4943 because of section 4943(f) (regarding certain Type II supporting organizations, and all Type III non-functionally integrated supporting organizations)? *If "Yes," answer 10b below.*	10a		
b	Did the organization have any excess business holdings in the tax year? *(Use Schedule C, Form 4720, to determine whether the organization had excess business holdings.)*	10b		

Part IV Supporting Organizations *(continued)*

			Yes	No
11	Has the organization accepted a gift or contribution from any of the following persons?			
a	A person who directly or indirectly controls, either alone or together with persons described in (b) and (c) below, the governing body of a supported organization?	11a		
b	A family member of a person described in (a) above?	11b		
c	A 35% controlled entity of a person described in (a) or (b) above? *If "Yes" to a, b, or c, provide detail in Part VI.*	11c		

Section B. Type I Supporting Organizations

			Yes	No
1	Did the directors, trustees, or membership of one or more supported organizations have the power to regularly appoint or elect at least a majority of the organization's directors or trustees at all times during the tax year? *If "No," describe in Part VI how the supported organization(s) effectively operated, supervised, or controlled the organization's activities. If the organization had more than one supported organization, describe how the powers to appoint and/or remove directors or trustees were allocated among the supported organizations and what conditions or restrictions, if any, applied to such powers during the tax year.*	1		
2	Did the organization operate for the benefit of any supported organization other than the supported organization(s) that operated, supervised, or controlled the supporting organization? *If "Yes," explain in Part VI how providing such benefit carried out the purposes of the supported organization(s) that operated, supervised, or controlled the supporting organization.*	2		

Section C. Type II Supporting Organizations

			Yes	No
1	Were a majority of the organization's directors or trustees during the tax year also a majority of the directors or trustees of each of the organization's supported organization(s)? *If "No," describe in Part VI how control or management of the supporting organization was vested in the same persons that controlled or managed the supported organization(s).*	1		

Section D. All Type III Supporting Organizations

			Yes	No
1	Did the organization provide to each of its supported organizations, by the last day of the fifth month of the organization's tax year, (i) a written notice describing the type and amount of support provided during the prior tax year, (ii) a copy of the Form 990 that was most recently filed as of the date of notification, and (iii) copies of the organization's governing documents in effect on the date of notification, to the extent not previously provided?	1		
2	Were any of the organization's officers, directors, or trustees either (i) appointed or elected by the supported organization(s) or (ii) serving on the governing body of a supported organization? *If "No," explain in Part VI how the organization maintained a close and continuous working relationship with the supported organization(s).*	2		
3	By reason of the relationship described in (2), did the organization's supported organizations have a significant voice in the organization's investment policies and in directing the use of the organization's income or assets at all times during the tax year? *If "Yes," describe in Part VI the role the organization's supported organizations played in this regard.*	3		

Section E. Type III Functionally-Integrated Supporting Organizations

1 *Check the box next to the method that the organization used to satisfy the Integral Part Test during the year (see instructions).*

a ☐ The organization satisfied the Activities Test. *Complete line 2 below.*

b ☐ The organization is the parent of each of its supported organizations. *Complete line 3 below.*

c ☐ The organization supported a governmental entity. *Describe in Part VI how you supported a government entity (see instructions).*

			Yes	No
2	Activities Test. *Answer (a) and (b) below.*			
a	Did substantially all of the organization's activities during the tax year directly further the exempt purposes of the supported organization(s) to which the organization was responsive? *If "Yes," then in Part VI identify those supported organizations and explain how these activities directly furthered their exempt purposes, how the organization was responsive to those supported organizations, and how the organization determined that these activities constituted substantially all of its activities.*	2a		
b	Did the activities described in (a) constitute activities that, but for the organization's involvement, one or more of the organization's supported organization(s) would have been engaged in? *If "Yes," explain in Part VI the reasons for the organization's position that its supported organization(s) would have engaged in these activities but for the organization's involvement.*	2b		
3	Parent of Supported Organizations. *Answer (a) and (b) below.*			
a	Did the organization have the power to regularly appoint or elect a majority of the officers, directors, or trustees of each of the supported organizations? *Provide details in Part VI.*	3a		
b	Did the organization exercise a substantial degree of direction over the policies, programs, and activities of each of its supported organizations? *If "Yes," describe in Part VI the role played by the organization in this regard.*	3b		

Part V Type III Non-Functionally Integrated 509(a)(3) Supporting Organizations

1 ☐ Check here if the organization satisfied the Integral Part Test as a qualifying trust on Nov. 20, 1970 (explain in Part VI). **See instructions.** All other Type III non-functionally integrated supporting organizations must complete Sections A through E.

Section A - Adjusted Net Income		(A) Prior Year	(B) Current Year (optional)
1 Net short-term capital gain	1		
2 Recoveries of prior-year distributions	2		
3 Other gross income (see instructions)	3		
4 Add lines 1 through 3.	4		
5 Depreciation and depletion	5		
6 Portion of operating expenses paid or incurred for production or collection of gross income or for management, conservation, or maintenance of property held for production of income (see instructions)	6		
7 Other expenses (see instructions)	7		
8 **Adjusted Net Income** (subtract lines 5, 6, and 7 from line 4)	8		

Section B - Minimum Asset Amount		(A) Prior Year	(B) Current Year (optional)
1 Aggregate fair market value of all non-exempt-use assets (see instructions for short tax year or assets held for part of year):			
a Average monthly value of securities	1a		
b Average monthly cash balances	1b		
c Fair market value of other non-exempt-use assets	1c		
d **Total** (add lines 1a, 1b, and 1c)	1d		
e **Discount** claimed for blockage or other factors (explain in detail in **Part VI**):			
2 Acquisition indebtedness applicable to non-exempt-use assets	2		
3 Subtract line 2 from line 1d.	3		
4 Cash deemed held for exempt use. Enter 1-1/2% of line 3 (for greater amount, see instructions).	4		
5 Net value of non-exempt-use assets (subtract line 4 from line 3)	5		
6 Multiply line 5 by .035.	6		
7 Recoveries of prior-year distributions	7		
8 **Minimum Asset Amount** (add line 7 to line 6)	8		

Section C - Distributable Amount		Current Year
1 Adjusted net income for prior year (from Section A, line 8, Column A)	1	
2 Enter 85% of line 1.	2	
3 Minimum asset amount for prior year (from Section B, line 8, Column A)	3	
4 Enter greater of line 2 or line 3.	4	
5 Income tax imposed in prior year	5	
6 **Distributable Amount.** Subtract line 5 from line 4, unless subject to emergency temporary reduction (see instructions).	6	

7 ☐ Check here if the current year is the organization's first as a non-functionally integrated Type III supporting organization (see instructions).

Part V Type III Non-Functionally Integrated 509(a)(3) Supporting Organizations *(continued)*

Section D - Distributions		Current Year
1	Amounts paid to supported organizations to accomplish exempt purposes	
2	Amounts paid to perform activity that directly furthers exempt purposes of supported organizations, in excess of income from activity	
3	Administrative expenses paid to accomplish exempt purposes of supported organizations	
4	Amounts paid to acquire exempt-use assets	
5	Qualified set-aside amounts (prior IRS approval required)	
6	Other distributions (describe in **Part VI**). See instructions.	
7	**Total annual distributions.** Add lines 1 through 6.	
8	Distributions to attentive supported organizations to which the organization is responsive (provide details in **Part VI**). See instructions.	
9	Distributable amount for 2019 from Section C, line 6	
10	Line 8 amount divided by line 9 amount	

Section E - Distribution Allocations (see instructions)		(i) Excess Distributions	(ii) Underdistributions Pre-2019	(iii) Distributable Amount for 2019
1	Distributable amount for 2019 from Section C, line 6			
2	Underdistributions, if any, for years prior to 2019 (reasonable cause required-explain in **Part VI**). See instructions.			
3	Excess distributions carryover, if any, to 2019			
a	From 2014			
b	From 2015			
c	From 2016			
d	From 2017			
e	From 2018			
f	**Total** of lines 3a through e			
g	Applied to underdistributions of prior years			
h	Applied to 2019 distributable amount			
i	Carryover from 2014 not applied (see instructions)			
j	Remainder. Subtract lines 3g, 3h, and 3i from 3f.			
4	Distributions for 2019 from Section D, line 7: $			
a	Applied to underdistributions of prior years			
b	Applied to 2019 distributable amount			
c	Remainder. Subtract lines 4a and 4b from 4.			
5	Remaining underdistributions for years prior to 2019, if any. Subtract lines 3g and 4a from line 2. For result greater than zero, explain in **Part VI**. See instructions.			
6	Remaining underdistributions for 2019. Subtract lines 3h and 4b from line 1. For result greater than zero, explain in **Part VI**. See instructions.			
7	**Excess distributions carryover to 2020.** Add lines 3j and 4c.			
8	Breakdown of line 7:			
a	Excess from 2015			
b	Excess from 2016			
c	Excess from 2017			
d	Excess from 2018			
e	Excess from 2019			

Part VI **Supplemental Information.** Provide the explanations required by Part II, line 10; Part II, line 17a or 17b; Part III, line 12; Part IV, Section A, lines 1, 2, 3b, 3c, 4b, 4c, 5a, 6, 9a, 9b, 9c, 11a, 11b, and 11c; Part IV, Section B, lines 1 and 2; Part IV, Section C, line 1; Part IV, Section D, lines 2 and 3; Part IV, Section E, lines 1c, 2a, 2b, 3a, and 3b; Part V, line 1; Part V, Section B, line 1e; Part V, Section D, lines 5, 6, and 8; and Part V, Section E, lines 2, 5, and 6. Also complete this part for any additional information. (See instructions.)

SCHEDULE D (Form 990)

Department of the Treasury
Internal Revenue Service

Supplemental Financial Statements

▶ Complete if the organization answered "Yes" on Form 990, Part IV, line 6, 7, 8, 9, 10, 11a, 11b, 11c, 11d, 11e, 11f, 12a, or 12b.
▶ Attach to Form 990.
▶ Go to www.irs.gov/Form990 for instructions and the latest information.

OMB No. 1545-0047
2019
Open to Public Inspection

Name of the organization
Northern Nevada Building & Construc Trades Council Development Corp

Employer identification number
88-0176297

Part I Organizations Maintaining Donor Advised Funds or Other Similar Funds or Accounts.

Complete if the organization answered "Yes" on Form 990, Part IV, line 6.

	(a) Donor advised funds	(b) Funds and other accounts
1 Total number at end of year		
2 Aggregate value of contributions to (during year)		
3 Aggregate value of grants from (during year)		
4 Aggregate value at end of year		

5 Did the organization inform all donors and donor advisors in writing that the assets held in donor advised funds are the organization's property, subject to the organization's exclusive legal control? ☐ Yes ☐ No

6 Did the organization inform all grantees, donors, and donor advisors in writing that grant funds can be used only for charitable purposes and not for the benefit of the donor or donor advisor, or for any other purpose conferring impermissible private benefit? ☐ Yes ☐ No

Part II Conservation Easements.

Complete if the organization answered "Yes" on Form 990, Part IV, line 7.

1 Purpose(s) of conservation easements held by the organization (check all that apply).
- ☐ Preservation of land for public use (for example, recreation or educatior
- ☐ Protection of natural habitat
- ☐ Preservation of open space
- ☐ Preservation of a historically important land area
- ☐ Preservation of a certified historic structure

2 Complete lines 2a through 2d if the organization held a qualified conservation contribution in the form of a conservation easement on the last day of the tax year.

		Held at the End of the Tax Year
a Total number of conservation easements	2a	
b Total acreage restricted by conservation easements	2b	
c Number of conservation easements on a certified historic structure included in (a)	2c	
d Number of conservation easements included in (c) acquired after 7/25/06, and not on a historic structure listed in the National Register	2d	

3 Number of conservation easements modified, transferred, released, extinguished, or terminated by the organization during the tax year ▶

4 Number of states where property subject to conservation easement is located ▶

5 Does the organization have a written policy regarding the periodic monitoring, inspection, handling of violations, and enforcement of the conservation easements it holds? ☐ Yes ☐ No

6 Staff and volunteer hours devoted to monitoring, inspecting, handling of violations, and enforcing conservation easements during the year ▶

7 Amount of expenses incurred in monitoring, inspecting, handling of violations, and enforcing conservation easements during the year ▶ $

8 Does each conservation easement reported on line 2(d) above satisfy the requirements of section 170(h)(4)(B)(i) and section 170(h)(4)(B)(ii)? ☐ Yes ☐ No

9 In Part XIII, describe how the organization reports conservation easements in its revenue and expense statement and balance sheet, and include, if applicable, the text of the footnote to the organization's financial statements that describes the organization's accounting for conservation easements.

Part III Organizations Maintaining Collections of Art, Historical Treasures, or Other Similar Assets.

Complete if the organization answered "Yes" on Form 990, Part IV, line 8.

1a If the organization elected, as permitted under FASB ASC 958, not to report in its revenue statement and balance sheet works of art, historical treasures, or other similar assets held for public exhibition, education, or research in furtherance of public service, provide in Part XIII the text of the footnote to its financial statements that describes these items.

b If the organization elected, as permitted under FASB ASC 958, to report in its revenue statement and balance sheet works of art, historical treasures, or other similar assets held for public exhibition, education, or research in furtherance of public service, provide the following amounts relating to these items:

(i) Revenue included on Form 990, Part VIII, line 1 ▶ $

(ii) Assets included in Form 990, Part X ▶ $

2 If the organization received or held works of art, historical treasures, or other similar assets for financial gain, provide the following amounts required to be reported under FASB ASC 958 relating to these items:

a Revenue included on Form 990, Part VIII, line 1 ▶ $

b Assets included in Form 990, Part X ▶ $

Part III Organizations Maintaining Collections of Art, Historical Treasures, or Other Similar Assets *(continued)*

3 Using the organization's acquisition, accession, and other records, check any of the following that make significant use of its collection items (check all that apply):

a ☐ Public exhibition
b ☐ Scholarly research
c ☐ Preservation for future generations
d ☐ Loan or exchange program
e ☐ Other .....

4 Provide a description of the organization's collections and explain how they further the organization's exempt purpose in Part XIII.

5 During the year, did the organization solicit or receive donations of art, historical treasures, or other similar assets to be sold to raise funds rather than to be maintained as part of the organization's collection? ☐ Yes ☐ No

Part IV Escrow and Custodial Arrangements.
Complete if the organization answered "Yes" on Form 990, Part IV, line 9, or reported an amount on Form 990, Part X, line 21.

1a Is the organization an agent, trustee, custodian or other intermediary for contributions or other assets not included on Form 990, Part X? ☐ Yes ☐ No

b If "Yes," explain the arrangement in Part XIII and complete the following table:

		Amount
c Beginning balance	1c	
d Additions during the year	1d	
e Distributions during the year	1e	
f Ending balance	1f	

2a Did the organization include an amount on Form 990, Part X, line 21, for escrow or custodial account liability? ☐ Yes ☐ No

b If "Yes," explain the arrangement in Part XIII. Check here if the explanation has been provided on Part XIII ☐

Part V Endowment Funds.
Complete if the organization answered "Yes" on Form 990, Part IV, line 10.

	(a) Current year	(b) Prior year	(c) Two years back	(d) Three years back	(e) Four years back
1a Beginning of year balance					
b Contributions					
c Net investment earnings, gains, and losses					
d Grants or scholarships					
e Other expenditures for facilities and programs					
f Administrative expenses					
g End of year balance					

2 Provide the estimated percentage of the current year end balance (line 1g, column (a)) held as:

a Board designated or quasi-endowment ▶ ..... %
b Permanent endowment ▶ ..... %
c Term endowment ▶ ..... %

The percentages on lines 2a, 2b, and 2c should equal 100%.

3a Are there endowment funds not in the possession of the organization that are held and administered for the organization by:

		Yes	No
(i) Unrelated organizations	3a(i)		
(ii) Related organizations	3a(ii)		
b If "Yes" on line 3a(ii), are the related organizations listed as required on Schedule R?	3b		

4 Describe in Part XIII the intended uses of the organization's endowment funds.

Part VI Land, Buildings, and Equipment.
Complete if the organization answered "Yes" on Form 990, Part IV, line 11a. See Form 990, Part X, line 10.

Description of property	(a) Cost or other basis (investment)	(b) Cost or other basis (other)	(c) Accumulated depreciation	(d) Book value
1a Land		252,019		252,019
b Buildings		3,093,453	2,800,454	292,999
c Leasehold improvements				
d Equipment		126,000	87,468	38,532
e Other		1,204,504	860,212	344,292
Total. Add lines 1a through 1e. *(Column (d) must equal Form 990, Part X, column (B), line 10c.)* ▶				927,842

Part VII Investments – Other Securities.
Complete if the organization answered "Yes" on Form 990, Part IV, line 11b. See Form 990, Part X, line 12.

(a) Description of security or category (including name of security)	(b) Book value	(c) Method of valuation: Cost or end-of-year market value
(1) Financial derivatives		
(2) Closely held equity interests		
(3) Other		
(A)		
(B)		
(C)		
(D)		
(E)		
(F)		
(G)		
(H)		
Total. *(Column (b) must equal Form 990, Part X, col. (B) line 12.)* ▶		

Part VIII Investments – Program Related.
Complete if the organization answered "Yes" on Form 990, Part IV, line 11c. See Form 990, Part X, line 13.

(a) Description of investment	(b) Book value	(c) Method of valuation: Cost or end-of-year market value
(1)		
(2)		
(3)		
(4)		
(5)		
(6)		
(7)		
(8)		
(9)		
Total. *(Column (b) must equal Form 990, Part X, col. (B) line 13.)* ▶		

Part IX Other Assets.
Complete if the organization answered "Yes" on Form 990, Part IV, line 11d. See Form 990, Part X, line 15.

(a) Description	(b) Book value
(1)	
(2)	
(3)	
(4)	
(5)	
(6)	
(7)	
(8)	
(9)	
Total. *(Column (b) must equal Form 990, Part X, col. (B) line 15.)* ▶	

Part X Other Liabilities.
Complete if the organization answered "Yes" on Form 990, Part IV, line 11e or 11f. See Form 990, Part X, line 25.

1. (a) Description of liability	(b) Book value
(1) Federal income taxes	
(2) TENANT SECURITY DEPOSITS	27,962
(3) REFUNDABLE PET DEPOSITS	844
(4)	
(5)	
(6)	
(7)	
(8)	
(9)	
Total. *(Column (b) must equal Form 990, Part X, col. (B) line 25.)* ▶	28,806

2. Liability for uncertain tax positions. In Part XIII, provide the text of the footnote to the organization's financial statements that reports the organization's liability for uncertain tax positions under FASB ASC 740. Check here if the text of the footnote has been provided in Part XIII X

Part XI Reconciliation of Revenue per Audited Financial Statements With Revenue per Return.
Complete if the organization answered "Yes" on Form 990, Part IV, line 12a.

1	Total revenue, gains, and other support per audited financial statements		1	1,379,970
2	Amounts included on line 1 but not on Form 990, Part VIII, line 12:			
a	Net unrealized gains (losses) on investments	2a		
b	Donated services and use of facilities	2b		
c	Recoveries of prior year grants	2c		
d	Other (Describe in Part XIII.)	2d		
e	Add lines 2a through 2d		2e	
3	Subtract line 2e from line 1		3	1,379,970
4	Amounts included on Form 990, Part VIII, line 12, but not on line 1:			
a	Investment expenses not included on Form 990, Part VIII, line 7b	4a		
b	Other (Describe in Part XIII.)	4b		
c	Add lines 4a and 4b		4c	
5	Total revenue. Add lines 3 and 4c. *(This must equal Form 990, Part I, line 12.)*		5	1,379,970

Part XII Reconciliation of Expenses per Audited Financial Statements With Expenses per Return.
Complete if the organization answered "Yes" on Form 990, Part IV, line 12a.

1	Total expenses and losses per audited financial statements		1	1,302,106
2	Amounts included on line 1 but not on Form 990, Part IX, line 25:			
a	Donated services and use of facilities	2a		
b	Prior year adjustments	2b		
c	Other losses	2c		
d	Other (Describe in Part XIII.)	2d		
e	Add lines 2a through 2d		2e	
3	Subtract line 2e from line 1		3	1,302,106
4	Amounts included on Form 990, Part IX, line 25, but not on line 1:			
a	Investment expenses not included on Form 990, Part VIII, line 7b	4a		
b	Other (Describe in Part XIII.)	4b		
c	Add lines 4a and 4b		4c	
5	Total expenses. Add lines 3 and 4c. *(This must equal Form 990, Part I, line 18.)*		5	1,302,106

Part XIII Supplemental Information.

Provide the descriptions required for Part II, lines 3, 5, and 9; Part III, lines 1a and 4; Part IV, lines 1b and 2b; Part V, line 4; Part X, line 2; Part XI, lines 2d and 4b; and Part XII, lines 2d and 4b. Also complete this part to provide any additional information.

Part X - FIN 48 Footnote

The Project is a nonprofit corporation that is exempt from federal income taxes un Section 501(c)(3) of the internal Revenue Code. Accordingly, no liability for federal income taxes has been provided in the financial statements. It is the Project's tax position that it has not engaged in activities that would jeopardize its exempt status nor has it engaged in activities that would result in unrelated business income tax. The Project's Forms 990, Return of Organization Exempt from Income Tax, for the tax years ending 2017, 2018 and 2019 are subject to examination by the IRS, generally for three years after they were filed.

Part XIII Supplemental Information *(continued)*

SCHEDULE L
(Form 990 or 990-EZ)

Department of the Treasury
Internal Revenue Service

Transactions With Interested Persons

▶ Complete if the organization answered "Yes" on Form 990, Part IV, line 25a, 25b, 26, 27, 28a, 28b, or 28c, or Form 990-EZ, Part V, line 38a or 40b.
▶ Attach to Form 990 or Form 990-EZ.
▶ Go to *www.irs.gov/Form990* for instructions and the latest information.

OMB No. 1545-0047
2019
Open To Public Inspection

Name of the organization: Northern Nevada Building & Construc Trades Council Development Corp

Employer identification number: 88-0176297

Part I Excess Benefit Transactions (section 501(c)(3), section 501(c)(4), and 501(c)(29) organizations only).

Complete if the organization answered "Yes" on Form 990, Part IV, line 25a or 25b, or Form 990-EZ, Part V, line 40b.

1	(a) Name of disqualified person	(b) Relationship between disqualified person and organization	(c) Description of transaction	(d) Corrected? Yes	(d) Corrected? No
(1)					
(2)					
(3)					
(4)					
(5)					
(6)					

2 Enter the amount of tax incurred by the organization managers or disqualified persons during the year under section 4958 ▶ $

3 Enter the amount of tax, if any, on line 2, above, reimbursed by the organization ▶ $

Part II Loans to and/or From Interested Persons.

Complete if the organization answered "Yes" on Form 990-EZ, Part V, line 38a or Form 990, Part IV, line 26; or if the organization reported an amount on Form 990, Part X, line 5, 6, or 22.

	(a) Name of interested person	(b) Relationship with organization	(c) Purpose of loan	(d) Loan to or from the org.? To	(d) Loan to or from the org.? From	(e) Original principal amount	(f) Balance due	(g) In default? Yes	(g) In default? No	(h) Approved by board or committee? Yes	(h) Approved by board or committee? No	(i) Written agreement? Yes	(i) Written agreement? No
(1)													
(2)													
(3)													
(4)													
(5)													
(6)													
(7)													
(8)													
(9)													
(10)													
Total						▶ $							

Part III Grants or Assistance Benefiting Interested Persons.

Complete if the organization answered "Yes" on Form 990, Part IV, line 27.

	(a) Name of interested person	(b) Relationship between interested person and the organization	(c) Amount of assistance	(d) Type of assistance	(e) Purpose of assistance
(1)					
(2)					
(3)					
(4)					
(5)					
(6)					
(7)					
(8)					
(9)					
(10)					

Part IV Business Transactions Involving Interested Persons.

Complete if the organization answered "Yes" on Form 990, Part IV, line 28a, 28b, or 28c.

(a) Name of interested person	(b) Relationship between interested person and the organization	(c) Amount of transaction	(d) Description of transaction	(e) Sharing of org. revenues? Yes	(e) Sharing of org. revenues? No
(1) Building & Construction Trades	Managing Agent				X
(2) Council of Northern Nevada	& Owner		Management Fees		X
(3)					
(4)					
(5)					
(6)					
(7)					
(8)					
(9)					
(10)					

Part V Supplemental Information.

Provide additional information for responses to questions on Schedule L (see instructions).

SCHEDULE O
(Form 990 or 990-EZ)

Department of the Treasury
Internal Revenue Service

Supplemental Information to Form 990 or 990-EZ

Complete to provide information for responses to specific questions on Form 990 or 990-EZ or to provide any additional information.

▶ Attach to Form 990 or 990-EZ.

▶ Go to *www.irs.gov/Form990* for the latest information.

OMB No. 1545-0047

2019

Open to Public Inspection

Name of the organization: Northern Nevada Building & Construc Trades Council Development Corp

Employer identification number: 88-0176297

Form 990, Part I, Line 6

All of the board members are volunteers and there are no benefits provided.

Form 990, Part VI, Line 11b - Organization's Process to Review Form 990

990 is compared to the annual audit

Form 990, Part VI, Line 15b - Compensation Process for Officers

All compensation decisions are taken before the board and an agreement is reached among the members.

Form 990, Part VI, Line 19 - Governing Documents Disclosure Explanation

Upon Request

Form **4562**

Department of the Treasury
Internal Revenue Service (99)

Depreciation and Amortization
(Including Information on Listed Property)

▶ Attach to your tax return.

▶ Go to *www.irs.gov/Form4562* for instructions and the latest information.

OMB No. 1545-0172

2019

Attachment Sequence No. **179**

Name(s) shown on return: Northern Nevada Building & Construc Trades Council Development Corp

Identifying number: 88-0176297

Business or activity to which this form relates

Indirect Depreciation

Part I Election To Expense Certain Property Under Section 179

Note: If you have any listed property, complete Part V before you complete Part I.

1	Maximum amount (see instructions)	1	1,020,000
2	Total cost of section 179 property placed in service (see instructions)	2	
3	Threshold cost of section 179 property before reduction in limitation (see instructions)	3	2,550,000
4	Reduction in limitation. Subtract line 3 from line 2. If zero or less, enter -0-	4	
5	Dollar limitation for tax year. Subtract line 4 from line 1. If zero or less, enter -0-. If married filing separately, see instructions	5	

6	(a) Description of property	(b) Cost (business use only)	(c) Elected cost

7	Listed property. Enter the amount from line 29	7	
8	Total elected cost of section 179 property. Add amounts in column (c), lines 6 and 7	8	
9	Tentative deduction. Enter the **smaller** of line 5 or line 8	9	
10	Carryover of disallowed deduction from line 13 of your 2018 Form 4562	10	
11	Business income limitation. Enter the smaller of business income (not less than zero) or line 5. See instructions	11	
12	Section 179 expense deduction. Add lines 9 and 10, but don't enter more than line 11	12	
13	Carryover of disallowed deduction to 2020. Add lines 9 and 10, less line 12 ▶	13	

Note: Don't use Part II or Part III below for listed property. Instead, use Part V.

Part II Special Depreciation Allowance and Other Depreciation (Don't include listed property. See instructions.)

14	Special depreciation allowance for qualified property (other than listed property) placed in service during the tax year. See instructions	14	
15	Property subject to section 168(f)(1) election	15	
16	Other depreciation (including ACRS)	16	117,366

Part III MACRS Depreciation (Don't include listed property. See instructions.)

Section A

17	MACRS deductions for assets placed in service in tax years beginning before 2019	17	5,179
18	If you are electing to group any assets placed in service during the tax year into one or more general asset accounts, check here ▶ ☐		

Section B—Assets Placed in Service During 2019 Tax Year Using the General Depreciation System

	(a) Classification of property	(b) Month and year placed in service	(c) Basis for depreciation (business/investment use only–see instructions)	(d) Recovery period	(e) Convention	(f) Method	(g) Depreciation deduction
19a	3-year property						
b	5-year property						
c	7-year property						
d	10-year property						
e	15-year property						
f	20-year property						
g	25-year property			25 yrs.		S/L	
h	Residential rental property			27.5 yrs.	MM	S/L	
				27.5 yrs.	MM	S/L	
i	Nonresidential real property			39 yrs.	MM	S/L	
					MM	S/L	

Section C—Assets Placed in Service During 2019 Tax Year Using the Alternative Depreciation System

20a	Class life					S/L	
b	12-year			12 yrs.		S/L	
c	30-year			30 yrs.	MM	S/L	
d	40-year			40 yrs.	MM	S/L	

Part IV Summary (See instructions.)

21	Listed property. Enter amount from line 28	21	
22	**Total.** Add amounts from line 12, lines 14 through 17, lines 19 and 20 in column (g), and line 21. Enter here and on the appropriate lines of your return. Partnerships and S corporations—see instructions	22	122,545
23	For assets shown above and placed in service during the current year, enter the portion of the basis attributable to section 263A costs	23	

Federal Asset Report

Form 990, Page 1

Asset	Description	Date In Service	Cost	Bus %	Sec 179	Bonus	Basis for Depr	Per	Conv	Meth	Prior	Current
Prior MACRS:												
132	Sewer Line Replacement	10/31/15	142,432				142,432	27	MM	S/L	17,912	5,179
			142,432				142,432				17,912	5,179
Other Depreciation:												
1	Fully Depreciated Improvements	1/01/80	195,270				195,270	15	MO	S/L	195,270	0
2	Earthwork	5/01/80	68,414				68,414	40	MO	S/L	66,552	1,710
3	Site Improvements	5/01/80	10,210				10,210	40	MO	S/L	9,927	255
4	Trees	10/01/87	2,045				2,045	18	MO	S/L	2,045	0
5	Speed Bumps	10/10/89	1,120				1,120	15	MO	S/L	1,120	0
6	Concrete	8/09/91	4,436				4,436	15	MO	S/L	4,436	0
7	Concrete	8/21/95	29,650				29,650	15	MO	S/L	29,650	0
9	Walkways	7/29/99	6,168				6,168	15	MO	S/L	6,168	0
10	Walkways	2/28/01	11,965				11,965	15	MO	S/L	11,965	0
11	Walkways & Ramps	10/01/01	12,339				12,339	15	MO	S/L	12,339	0
13	Walkways	10/01/02	6,770				6,770	15	MO	S/L	6,770	0
14	Landscaping	10/01/02	5,269				5,269	15	MO	S/L	5,269	0
15	Fencing	8/05/02	1,458				1,458	15	MO	S/L	1,458	0
16	Walkways	8/15/03	7,658				7,658	15	MO	S/L	7,658	0
18	Walkways	9/01/05	17,204				17,204	15	MO	S/L	15,483	1,147
20	Walkways	8/01/06	4,419				4,419	15	MO	S/L	3,732	294
21	Walkways	7/01/07	12,917				12,917	15	MO	S/L	10,046	862
22	Walkways	3/01/08	4,665				4,665	15	MO	S/L	3,421	311
23	Fully Depreciated Buildings	1/01/80	6,465				6,465	15	MO	S/L	6,465	0
24	Buildings	5/01/80	1,677,085				1,677,085	40	MO	S/L	1,631,658	41,928
25	Constr. Period Int.	5/01/80	103,655				103,655	40	MO	S/L	100,837	2,591
26	Roofing	12/02/91	7,565				7,565	15	MO	S/L	7,565	0
27	Roofing	3/01/95	30,560				30,560	15	MO	S/L	30,560	0
28	Handicap Ramps	12/01/94	8,816				8,816	15	MO	S/L	8,816	0
29	Plumbing	12/01/94	14,447				14,447	15	MO	S/L	14,447	0
30	Roofing	3/31/95	27,000				27,000	15	MO	S/L	27,000	0
31	Building Repair	3/31/95	2,150				2,150	15	MO	S/L	2,150	0
32	Concrete Steps	3/13/98	679				679	15	MO	S/L	679	0
33	Handicap Ramps	7/29/99	6,070				6,070	15	MO	S/L	6,070	0
34	Handicap Railings	9/01/99	1,700				1,700	15	MO	S/L	1,700	0
35	Handicap Ramps	2/28/01	6,131				6,131	15	MO	S/L	6,131	0
36	Handicap Ramps & Patio	11/01/01	8,766				8,766	15	MO	S/L	8,766	0
37	Handicap Railings	4/09/01	1,526				1,526	15	MO	S/L	1,526	0
38	Balcony Repair	11/01/01	8,300				8,300	15	MO	S/L	8,300	0
39	Tile	7/15/01	4,450				4,450	15	MO	S/L	4,450	0
40	Signs	10/01/01	3,417				3,417	15	MO	S/L	3,417	0
41	Paint Exterior	11/01/01	110,994				110,994	15	MO	S/L	110,994	0
42	Shower Tub	6/06/01	1,450				1,450	15	MO	S/L	1,450	0
43	Tile	2/01/04	6,723				6,723	15	MO	S/L	6,723	0
44	Trim	10/01/03	17,780				17,780	15	MO	S/L	17,780	0
45	Concrete Steps	3/07/05	1,619				1,619	15	MO	S/L	1,520	99
46	Tile	3/01/05	2,669				2,669	15	MO	S/L	2,506	163
47	Paint Trim	8/28/06	24,699				24,699	15	MO	S/L	20,721	1,646
48	Concrete Steps	7/09/07	2,283				2,283	15	MO	S/L	1,802	152
49	Fully Depreciated Buildings Equipment Fix	1/01/80	414,971				414,971	5	MO	S/L	414,971	0
50	Rec. Bldg	6/04/99	3,650				3,650	5	MO	S/L	3,650	0
51	Hot Water Heater	12/21/01	2,560				2,560	5	MO	S/L	2,560	0
52	Lights	7/23/02	2,748				2,748	5	MO	S/L	2,748	0
53	Water Heaters	6/18/03	2,182				2,182	5	MO	S/L	2,182	0
54	Pump	3/04/04	772				772	5	MO	S/L	772	0
62	Appliances	10/01/04	35,781				35,781	5	MO	S/L	35,781	0
63	Appliances	10/01/05	32,070				32,070	5	MO	S/L	32,070	0
64	Appliances	10/01/06	26,630				26,630	5	MO	S/L	26,630	0
65	Appliances	10/01/07	19,763				19,763	5	MO	S/L	19,763	0
66	Appliances	10/01/07	6,148				6,148	5	MO	S/L	6,148	0
68	Filing Cabinets	3/14/01	834				834	7	MO	S/L	834	0
69	Upholstry Chairs	3/28/01	2,074				2,074	7	MO	S/L	2,074	0
80	Carpet	10/01/04	30,889				30,889	5	MO	S/L	30,889	0
81	Furniture	2/01/05	5,354				5,354	5	MO	S/L	5,354	0
82	Flooring	10/01/05	42,799				42,799	5	MO	S/L	42,799	0
83	Furniture (C/A)	10/01/05	16,650				16,650	5	MO	S/L	16,650	0
84	Flooring	10/01/06	32,750				32,750	5	MO	S/L	32,750	0
85	Flooring	10/01/07	17,347				17,347	5	MO	S/L	17,347	0

Federal Asset Report

Form 990, Page 1

Asset	Description	Date In Service	Cost	Bus %	Sec 179	Bonus	Basis for Depr	Per	Conv	Meth	Prior	Current
86	Flooring	10/01/07	5,270				5,270	5	MO	S/L	5,270	0
88	Shed	12/12/00	1,552				1,552	5	MO	S/L	1,552	0
89	Billy Goat	8/30/01	1,137				1,137	5	MO	S/L	1,137	0
90	Mule	1/23/03	11,256				11,256	5	MO	S/L	11,256	0
91	Shed	12/06/02	1,669				1,669	5	MO	S/L	1,669	0
92	Shed	1/03/03	822				822	5	MO	S/L	822	0
93	Floor Machine	6/17/04	2,708				2,708	5	MO	S/L	2,708	0
94	Land	5/01/80	252,019				252,019	0	--	Land	0	0
95	Chairs, Lamps, Coffee Sets	8/25/09	696				696	5	MO	S/L	696	0
96	Charis & Lamps	11/19/09	421				421	5	MO	S/L	421	0
97	Coffee Tables, End Tables, Lamps & Side (	2/17/10	1,203				1,203	5	MO	S/L	1,203	0
99	Muratec Copier	4/14/09	5,363				5,363	5	MO	S/L	5,363	0
100	Dell Computer	4/29/09	737				737	5	MO	S/L	737	0
101	File Cabinet	8/12/09	623				623	7	MO	S/L	623	0
102	Snow Blower	11/18/09	645				645	5	MO	S/L	645	0
103	Rails	7/28/10	6,156				6,156	15	MO	S/L	3,557	410
104	Handicap Ramp	7/28/10	3,217				3,217	15	MO	S/L	1,859	214
105	Curbs	8/16/10	5,813				5,813	15	MO	S/L	3,326	388
106	Sofa and Loveseat	11/27/10	899				899	5	MO	S/L	899	0
107	Security Cameras	3/29/11	36,291				36,291	5	MO	S/L	36,291	0
108	Trailor	8/06/10	5,963				5,963	5	MO	S/L	5,963	0
109	New Curbs	1/28/12	1,291				1,291	15	MO	S/L	617	86
110	Parking Lot Improvements	9/12/11	484,550				484,550	15	MO	S/L	244,967	32,303
111	Furniture	6/21/11	538				538	7	MO	S/L	538	0
112	Sofa	7/26/11	966				966	7	MO	S/L	966	0
113	Sofa	8/17/11	538				538	7	MO	S/L	538	0
114	Tables and Chairs	10/26/11	405				405	7	MO	S/L	405	0
115	Chairs	3/02/12	207				207	7	MO	S/L	207	0
116	DVD Upgrade	5/27/11	568				568	5	MO	S/L	568	0
117	File Cabinet	3/12/12	590				590	7	MO	S/L	590	0
118	Dell Computer	3/27/12	1,995				1,995	5	MO	S/L	1,995	0
119	Pressure Washer	6/29/11	512				512	5	MO	S/L	512	0
120	Steps	4/11/12	20,322				20,322	15	MO	S/L	9,484	1,354
121	Steps	10/24/12	307				307	15	MO	S/L	131	21
123	Parking Lot Improvements	5/21/12	11,500				11,500	15	MO	S/L	5,239	767
124	Vacuum	7/30/12	393				393	5	MO	S/L	393	0
125	Quickbooks	8/04/12	2,888				2,888	5	MO	S/L	2,888	0
126	Cab Kit	9/09/12	2,783				2,783	5	MO	S/L	2,783	0
127	Tires	9/09/12	558				558	5	MO	S/L	558	0
129	Roofing	1/21/13	294,873				294,873	15	MO	S/L	121,226	19,658
131	Love Seat, Sofa and 6 Kitchen Chairs	6/09/14	1,240				1,240	7	MO	S/L	856	177
133	Sofa, Love Seat & Chairs	4/27/16	1,174				1,174	7	MO	S/L	489	168
134	Water Heater	4/13/16	2,229				2,229	5	MO	S/L	1,337	446
135	Water Heater - Laundry	6/02/16	4,553				4,553	5	MO	S/L	2,580	910
136	Interior/Exterior Repairs	8/04/17	30,644				30,644	15	MO	S/L	3,405	2,043
137	Water Heater Bldng 7	1/05/18	7,838				7,838	5	MO	S/L	1,959	1,568
138	Phone System ESI 50	4/06/18	2,495				2,495	5	MO	S/L	499	499
139	Office Computers	5/08/19	1,229				1,229	5	MO	S/L	0	225
140	Balcony Repair	7/27/19	6,562				6,562	15	MO	S/L	0	292
141	Balcony Repair	1/23/20	62,000				62,000	15	MO	S/L	0	689
142	Balcony Repair	3/23/20	24,187				24,187	15	MO	S/L	0	0
143	New Security Camera System	9/01/19	34,201				34,201	5	MO	S/L	0	3,990
	Total Other Depreciation		4,533,544				4,533,544				3,615,041	117,366
	Total ACRS and Other Depreciation		4,533,544				4,533,544				3,615,041	117,366
	Grand Totals		4,675,976				4,675,976				3,632,953	122,545
	Less: Dispositions and Transfers		0				0				0	0
	Less: Start-up/Org Expense		0				0				0	0
	Net Grand Totals		4,675,976				4,675,976				3,632,953	122,545

AMT Asset Report

Form 990, Page 1

Asset	Description	Date In Service	Cost	Bus %	Sec 179 Bonus	Basis for Depr	Per	Conv	Meth	Prior	Current
Prior MACRS:											
132	Sewer Line Replacement	10/31/15	142,432			142,432	27	MM	S/L	17,912	5,179
			142,432			142,432				17,912	5,179
Other Depreciation:											
1	Fully Depreciated Improvements	1/01/80	195,270			195,270	15	MO	S/L	195,270	0
2	Earthwork	5/01/80	68,414			68,414	40	MO	S/L	66,552	1,710
3	Site Improvements	5/01/80	10,210			10,210	40	MO	S/L	9,927	255
4	Trees	10/01/87	2,045			2,045	18	MO	S/L	2,045	0
5	Speed Bumps	10/10/89	1,120			1,120	15	MO	S/L	1,120	0
6	Concrete	8/09/91	4,436			4,436	15	MO	S/L	4,436	0
7	Concrete	8/21/95	29,650			29,650	15	MO	S/L	29,650	0
9	Walkways	7/29/99	6,168			6,168	15	MO	S/L	6,168	0
10	Walkways	2/28/01	11,965			11,965	15	MO	S/L	11,965	0
11	Walkways & Ramps	10/01/01	12,339			12,339	15	MO	S/L	12,339	0
13	Walkways	10/01/02	6,770			6,770	15	MO	S/L	6,770	0
14	Landscaping	10/01/02	5,269			5,269	15	MO	S/L	5,269	0
15	Fencing	8/05/02	1,458			1,458	15	MO	S/L	1,458	0
16	Walkways	8/15/03	7,658			7,658	15	MO	S/L	7,658	0
18	Walkways	9/01/05	17,204			17,204	15	MO	S/L	15,483	1,147
20	Walkways	8/01/06	4,419			4,419	15	MO	S/L	3,732	294
21	Walkways	7/01/07	12,917			12,917	15	MO	S/L	10,046	862
22	Walkways	3/01/08	4,665			4,665	15	MO	S/L	3,421	311
23	Fully Depreciated Buildings	1/01/80	6,465			6,465	15	MO	S/L	6,465	0
24	Buildings	5/01/80	1,677,085			1,677,085	40	MO	S/L	1,631,658	41,928
25	Constr. Period Int.	5/01/80	103,655			103,655	40	MO	S/L	100,837	2,591
26	Roofing	12/02/91	7,565			7,565	15	MO	S/L	7,565	0
27	Roofing	3/01/95	30,560			30,560	15	MO	S/L	30,560	0
28	Handicap Ramps	12/01/94	8,816			8,816	15	MO	S/L	8,816	0
29	Plumbing	12/01/94	14,447			14,447	15	MO	S/L	14,447	0
30	Roofing	3/31/95	27,000			27,000	15	MO	S/L	27,000	0
31	Building Repair	3/31/95	2,150			2,150	15	MO	S/L	2,150	0
32	Concrete Steps	3/13/98	679			679	15	MO	S/L	679	0
33	Handicap Ramps	7/29/99	6,070			6,070	15	MO	S/L	6,070	0
34	Handicap Railings	9/01/99	1,700			1,700	15	MO	S/L	1,700	0
35	Handicap Ramps	2/28/01	6,131			6,131	15	MO	S/L	6,131	0
36	Handicap Ramps & Patio	11/01/01	8,766			8,766	15	MO	S/L	8,766	0
37	Handicap Railings	4/09/01	1,526			1,526	15	MO	S/L	1,526	0
38	Balcony Repair	11/01/01	8,300			8,300	15	MO	S/L	8,300	0
39	Tile	7/15/01	4,450			4,450	15	MO	S/L	4,450	0
40	Signs	10/01/01	3,417			3,417	15	MO	S/L	3,417	0
41	Paint Exterior	11/01/01	110,994			110,994	15	MO	S/L	110,994	0
42	Shower Tub	6/06/01	1,450			1,450	15	MO	S/L	1,450	0
43	Tile	2/01/04	6,723			6,723	15	MO	S/L	6,723	0
44	Trim	10/01/03	17,780			17,780	15	MO	S/L	17,780	0
45	Concrete Steps	3/07/05	1,619			1,619	15	MO	S/L	1,520	99
46	Tile	3/01/05	2,669			2,669	15	MO	S/L	2,506	163
47	Paint Trim	8/28/06	24,699			24,699	15	MO	S/L	20,721	1,646
48	Concrete Steps	7/09/07	2,283			2,283	15	MO	S/L	1,802	152
49	Fully Depreciated Buildings Equipment Fix	1/01/80	414,971			414,971	5	MO	S/L	414,971	0
50	Rec. Bldg	6/04/99	3,650			3,650	5	MO	S/L	3,650	0
51	Hot Water Heater	12/21/01	2,560			2,560	5	MO	S/L	2,560	0
52	Lights	7/23/02	2,748			2,748	5	MO	S/L	2,748	0
53	Water Heaters	6/18/03	2,182			2,182	5	MO	S/L	2,182	0
54	Pump	3/04/04	772			772	5	MO	S/L	772	0
62	Appliances	10/01/04	35,781			35,781	5	MO	S/L	35,781	0
63	Appliances	10/01/05	32,070			32,070	5	MO	S/L	32,070	0
64	Appliances	10/01/06	26,630			26,630	5	MO	S/L	26,630	0
65	Appliances	10/01/07	19,763			19,763	5	MO	S/L	19,763	0
66	Appliances	10/01/07	6,148			6,148	5	MO	S/L	6,148	0
68	Filing Cabinets	3/14/01	834			834	7	MO	S/L	834	0
69	Upholstry Chairs	3/28/01	2,074			2,074	7	MO	S/L	2,074	0
80	Carpet	10/01/04	30,889			30,889	5	MO	S/L	30,889	0
81	Furniture	2/01/05	5,354			5,354	5	MO	S/L	5,354	0
82	Flooring	10/01/05	42,799			42,799	5	MO	S/L	42,799	0
83	Furniture (C/A)	10/01/05	16,650			16,650	5	MO	S/L	16,650	0
84	Flooring	10/01/06	32,750			32,750	5	MO	S/L	32,750	0
85	Flooring	10/01/07	17,347			17,347	5	MO	S/L	17,347	0

AMT Asset Report

Form 990, Page 1

Asset	Description	Date In Service	Cost	Bus %	Sec 179	Bonus	Basis for Depr	Per	Conv	Meth	Prior	Current
86	Flooring	10/01/07	5,270				5,270	5	MO	S/L	5,270	0
88	Shed	12/12/00	1,552				1,552	5	MO	S/L	1,552	0
89	Billy Goat	8/30/01	1,137				1,137	5	MO	S/L	1,137	0
90	Mule	1/23/03	11,256				11,256	5	MO	S/L	11,256	0
91	Shed	12/06/02	1,669				1,669	5	MO	S/L	1,669	0
92	Shed	1/03/03	822				822	5	MO	S/L	822	0
93	Floor Machine	6/17/04	2,708				2,708	5	MO	S/L	2,708	0
94	Land	5/01/80	252,019				252,019	0	--	Land	0	0
95	Chairs, Lamps, Coffee Sets	8/25/09	0				0	0	HY		0	0
96	Charis & Lamps	11/19/09	0				0	0	HY		0	0
97	Coffee Tables, End Tables, Lamps & Side (	2/17/10	0				0	0	HY		0	0
99	Muratec Copier	4/14/09	0				0	0	HY		0	0
100	Dell Computer	4/29/09	0				0	0	HY		0	0
101	File Cabinet	8/12/09	0				0	0	HY		0	0
102	Snow Blower	11/18/09	0				0	0	HY		0	0
103	Rails	7/28/10	6,156				6,156	15	MO	S/L	3,557	410
104	Handicap Ramp	7/28/10	3,217				3,217	15	MO	S/L	1,859	214
105	Curbs	8/16/10	5,813				5,813	15	MO	S/L	3,326	388
106	Sofa and Loveseat	11/27/10	899				899	5	MO	S/L	899	0
107	Security Cameras	3/29/11	36,291				36,291	5	MO	S/L	36,291	0
108	Trailor	8/06/10	5,963				5,963	5	MO	S/L	5,963	0
109	New Curbs	1/28/12	1,291				1,291	15	MO	S/L	617	86
110	Parking Lot Improvements	9/12/11	484,550				484,550	15	MO	S/L	244,967	32,303
111	Furniture	6/21/11	538				538	7	MO	S/L	538	0
112	Sofa	7/26/11	966				966	7	MO	S/L	966	0
113	Sofa	8/17/11	538				538	7	MO	S/L	538	0
114	Tables and Chairs	10/26/11	405				405	7	MO	S/L	405	0
115	Chairs	3/02/12	207				207	7	MO	S/L	207	0
116	DVD Upgrade	5/27/11	568				568	5	MO	S/L	568	0
117	File Cabinet	3/12/12	590				590	7	MO	S/L	590	0
118	Dell Computer	3/27/12	1,995				1,995	5	MO	S/L	1,995	0
119	Pressure Washer	6/29/11	512				512	5	MO	S/L	512	0
120	Steps	4/11/12	20,322				20,322	15	MO	S/L	9,484	1,354
121	Steps	10/24/12	307				307	15	MO	S/L	131	21
123	Parking Lot Improvements	5/21/12	11,500				11,500	15	MO	S/L	5,239	767
124	Vacuum	7/30/12	393				393	5	MO	S/L	393	0
125	Quickbooks	8/04/12	2,888				2,888	5	MO	S/L	2,888	0
126	Cab Kit	9/09/12	2,783				2,783	5	MO	S/L	2,783	0
127	Tires	9/09/12	558				558	5	MO	S/L	558	0
129	Roofing	1/21/13	294,873				294,873	15	MO	S/L	121,226	19,658
131	Love Seat, Sofa and 6 Kitchen Chairs	6/09/14	1,240				1,240	7	MO	S/L	856	177
133	Sofa, Love Seat & Chairs	4/27/16	1,174				1,174	7	MO	S/L	489	168
134	Water Heater	4/13/16	0				0	0	HY		0	0
135	Water Heater - Laundry	6/02/16	0				0	0	HY		0	0
136	Interior/Exterior Repairs	8/04/17	30,644				30,644	15	MO	S/L	3,405	2,043
137	Water Heater Bldng 7	1/05/18	7,838				7,838	5	MO	S/L	1,959	1,568
138	Phone System ESI 50	4/06/18	2,495				2,495	5	MO	S/L	499	499
139	Office Computers	5/08/19	1,229				1,229	5	MO	S/L	0	225
140	Balcony Repair	7/27/19	6,562				6,562	15	MO	S/L	0	292
141	Balcony Repair	1/23/20	62,000				62,000	15	MO	S/L	0	689
142	Balcony Repair	3/23/20	24,187				24,187	15	MO	S/L	0	0
143	New Security Camera System	9/01/19	34,201				34,201	5	MO	S/L	0	3,990
	Total Other Depreciation		4,517,074				4,517,074				3,601,436	116,010
	Total ACRS and Other Depreciation		4,517,074				4,517,074				3,601,436	116,010
	Grand Totals		4,659,506				4,659,506				3,619,348	121,189
	Less: Dispositions and Transfers		0				0				0	0
	Net Grand Totals		4,659,506				4,659,506				3,619,348	121,189

Depreciation Adjustment Report
All Business Activities

Form	Unit	Asset	Description	Tax	AMT	AMT Adjustments/ Preferences
MACRS Adjustments:						
Page 1	1	132	Sewer Line Replacement	5,179	5,179	0
				5,179	5,179	0

Asset	Description	Date In Service	Cost	Tax	AMT
Prior MACRS:					
132	Sewer Line Replacement	10/31/15	142,432	5,180	5,180
			142,432	5,180	5,180
Other Depreciation:					
1	Fully Depreciated Improvements	1/01/80	195,270	0	0
2	Earthwork	5/01/80	68,414	152	152
3	Site Improvements	5/01/80	10,210	28	28
4	Trees	10/01/87	2,045	0	0
5	Speed Bumps	10/10/89	1,120	0	0
6	Concrete	8/09/91	4,436	0	0
7	Concrete	8/21/95	29,650	0	0
9	Walkways	7/29/99	6,168	0	0
10	Walkways	2/28/01	11,965	0	0
11	Walkways & Ramps	10/01/01	12,339	0	0
13	Walkways	10/01/02	6,770	0	0
14	Landscaping	10/01/02	5,269	0	0
15	Fencing	8/05/02	1,458	0	0
16	Walkways	8/15/03	7,658	0	0
18	Walkways	9/01/05	17,204	574	574
20	Walkways	8/01/06	4,419	295	295
21	Walkways	7/01/07	12,917	861	861
22	Walkways	3/01/08	4,665	311	311
23	Fully Depreciated Buildings	1/01/80	6,465	0	0
24	Buildings	5/01/80	1,677,085	3,499	3,499
25	Constr. Period Int.	5/01/80	103,655	227	227
26	Roofing	12/02/91	7,565	0	0
27	Roofing	3/01/95	30,560	0	0
28	Handicap Ramps	12/01/94	8,816	0	0
29	Plumbing	12/01/94	14,447	0	0
30	Roofing	3/31/95	27,000	0	0
31	Building Repair	3/31/95	2,150	0	0
32	Concrete Steps	3/13/98	679	0	0
33	Handicap Ramps	7/29/99	6,070	0	0
34	Handicap Railings	9/01/99	1,700	0	0
35	Handicap Ramps	2/28/01	6,131	0	0
36	Handicap Ramps & Patio	11/01/01	8,766	0	0
37	Handicap Railings	4/09/01	1,526	0	0
38	Balcony Repair	11/01/01	8,300	0	0
39	Tile	7/15/01	4,450	0	0
40	Signs	10/01/01	3,417	0	0
41	Paint Exterior	11/01/01	110,994	0	0
42	Shower Tub	6/06/01	1,450	0	0
43	Tile	2/01/04	6,723	0	0
44	Trim	10/01/03	17,780	0	0
45	Concrete Steps	3/07/05	1,619	0	0
46	Tile	3/01/05	2,669	0	0
47	Paint Trim	8/28/06	24,699	1,647	1,647
48	Concrete Steps	7/09/07	2,283	152	152
49	Fully Depreciated Buildings Equipment Fixed	1/01/80	414,971	0	0
50	Rec. Bldg	6/04/99	3,650	0	0
51	Hot Water Heater	12/21/01	2,560	0	0
52	Lights	7/23/02	2,748	0	0
53	Water Heaters	6/18/03	2,182	0	0
54	Pump	3/04/04	772	0	0
62	Appliances	10/01/04	35,781	0	0
63	Appliances	10/01/05	32,070	0	0
64	Appliances	10/01/06	26,630	0	0
65	Appliances	10/01/07	19,763	0	0
66	Appliances	10/01/07	6,148	0	0
68	Filing Cabinets	3/14/01	834	0	0
69	Upholstry Chairs	3/28/01	2,074	0	0
80	Carpet	10/01/04	30,889	0	0
81	Furniture	2/01/05	5,354	0	0
82	Flooring	10/01/05	42,799	0	0

Asset	Description	Date In Service	Cost	Tax	AMT
83	Furniture (C/A)	10/01/05	16,650	0	0
84	Flooring	10/01/06	32,750	0	0
85	Flooring	10/01/07	17,347	0	0
86	Flooring	10/01/07	5,270	0	0
88	Shed	12/12/00	1,552	0	0
89	Billy Goat	8/30/01	1,137	0	0
90	Mule	1/23/03	11,256	0	0
91	Shed	12/06/02	1,669	0	0
92	Shed	1/03/03	822	0	0
93	Floor Machine	6/17/04	2,708	0	0
94	Land	5/01/80	252,019	0	0
95	Chairs, Lamps, Coffee Sets	8/25/09	696	0	0
96	Charis & Lamps	11/19/09	421	0	0
97	Coffee Tables, End Tables, Lamps & Side Chair	2/17/10	1,203	0	0
99	Muratec Copier	4/14/09	5,363	0	0
100	Dell Computer	4/29/09	737	0	0
101	File Cabinet	8/12/09	623	0	0
102	Snow Blower	11/18/09	645	0	0
103	Rails	7/28/10	6,156	411	411
104	Handicap Ramp	7/28/10	3,217	215	215
105	Curbs	8/16/10	5,813	387	387
106	Sofa and Loveseat	11/27/10	899	0	0
107	Security Cameras	3/29/11	36,291	0	0
108	Trailor	8/06/10	5,963	0	0
109	New Curbs	1/28/12	1,291	86	86
110	Parking Lot Improvements	9/12/11	484,550	32,304	32,304
111	Furniture	6/21/11	538	0	0
112	Sofa	7/26/11	966	0	0
113	Sofa	8/17/11	538	0	0
114	Tables and Chairs	10/26/11	405	0	0
115	Chairs	3/02/12	207	0	0
116	DVD Upgrade	5/27/11	568	0	0
117	File Cabinet	3/12/12	590	0	0
118	Dell Computer	3/27/12	1,995	0	0
119	Pressure Washer	6/29/11	512	0	0
120	Steps	4/11/12	20,322	1,355	1,355
121	Steps	10/24/12	307	20	20
123	Parking Lot Improvements	5/21/12	11,500	766	766
124	Vacuum	7/30/12	393	0	0
125	Quickbooks	8/04/12	2,888	0	0
126	Cab Kit	9/09/12	2,783	0	0
127	Tires	9/09/12	558	0	0
129	Roofing	1/21/13	294,873	19,658	19,658
131	Love Seat, Sofa and 6 Kitchen Chairs	6/09/14	1,240	177	177
133	Sofa, Love Seat & Chairs	4/27/16	1,174	168	168
134	Water Heater	4/13/16	2,229	446	0
135	Water Heater - Laundry	6/02/16	4,553	911	0
136	Interior/Exterior Repairs	8/04/17	30,644	2,043	2,043
137	Water Heater Bldng 7	1/05/18	7,838	1,567	1,567
138	Phone System ESI 50	4/06/18	2,495	499	499
139	Office Computers	5/08/19	1,229	246	246
140	Balcony Repair	7/27/19	6,562	437	437
141	Balcony Repair	1/23/20	62,000	4,133	4,133
142	Balcony Repair	3/23/20	24,187	1,612	1,612
143	New Security Camera System	9/01/19	34,201	6,840	6,840
144	Quality Carpet	8/26/20	27,300	1,062	1,062
	Total Other Depreciation		4,560,844	83,089	81,732
	Total ACRS and Other Depreciation		4,560,844	83,089	81,732
	Grand Totals		4,703,276	88,269	86,912

Form **990**

Two Year Comparison Report

For calendar year 2019, or tax year beginning 04/01/19 , ending 03/31/20

2018 & 2019

Name

Northern Nevada Building & Construc Trades Council Development Corp

Taxpayer Identification Number

88-0176297

			2018	2019	Differences
Revenue	1. Contributions, gifts, grants	1.			
	2. Membership dues and assessments	2.			
	3. Government contributions and grants	3.	887,140	990,862	103,722
	4. Program service revenue	4.	375,907	388,310	12,403
	5. Investment income	5.	368	798	430
	6. Proceeds from tax exempt bonds	6.			
	7. Net gain or (loss) from sale of assets other than inventory	7.			
	8. Net income or (loss) from fundraising events	8.			
	9. Net income or (loss) from gaming	9.			
	10. Net gain or (loss) on sales of inventory	10.			
	11. Other revenue	11.			
	12. **Total revenue.** Add lines 1 through 11	12.	1,263,415	1,379,970	116,555
Expenses	13. Grants and similar amounts paid	13.			
	14. Benefits paid to or for members	14.			
	15. Compensation of officers, directors, trustees, etc.	15.			
	16. Salaries, other compensation, and employee benefits	16.	389,552	357,033	-32,519
	17. Professional fundraising fees	17.			
	18. Other professional fees	18.	139,792	139,992	200
	19. Occupancy, rent, utilities, and maintenance	19.	537,092	628,264	91,172
	20. Depreciation and Depletion	20.	117,128	120,927	3,799
	21. Other expenses	21.	74,888	55,890	-18,998
	22. **Total expenses.** Add lines 13 through 21	22.	1,258,452	1,302,106	43,654
	23. **Excess or (Deficit).** Subtract line 22 from line 12	23.	4,963	77,864	72,901
Other Information	24. Total exempt revenue	24.	1,263,415	1,379,970	116,555
	25. Total unrelated revenue	25.			
	26. Total excludable revenue	26.	376,275	389,108	12,833
	27. Total assets	27.	1,191,066	1,309,491	118,425
	28. Total liabilities	28.	62,225	102,786	40,561
	29. Retained earnings	29.	1,128,841	1,206,705	77,864
	30. Number of voting members of governing body	30.	3	8	
	31. Number of independent voting members of governing body	31.	0	8	
	32. Number of employees	32.	7	7	
	33. Number of volunteers	33.	9	8	

Form **990** | **Tax Return History** | **2019**

Name: Northern Nevada Building & Construc Trades Council Development Corp

Employer Identification Number: 88-0176297

	2015	2016	2017	2018	2019	2020
Contributions, gifts, grants	830,487	820,007	838,440	887,140	990,862	
Membership dues						
Program service revenue	243,391	266,483	304,675	375,907	388,310	
Capital gain or loss						
Investment income	164	170	264	368	798	
Fundraising revenue (income/loss)						
Gaming revenue (income/loss)						
Other revenue						
Total revenue	1,074,042	1,086,660	1,143,379	1,263,415	1,379,970	
Grants and similar amounts paid						
Benefits paid to or for members						
Compensation of officers, etc.						
Other compensation	356,443	347,271	353,211	389,552	357,033	
Professional fees	128,164	137,312	127,312	139,792	139,992	
Occupancy costs	542,720	494,459	582,413	537,092	628,264	
Depreciation and depletion	134,394	124,257	118,287	117,128	120,927	
Other expenses	77,122	68,934	119,879	74,888	55,890	
Total expenses	1,238,843	1,172,233	1,301,102	1,258,452	1,302,106	
Excess or (Deficit)	-164,801	-85,573	-157,723	4,963	77,864	
Total exempt revenue	1,074,042	1,086,660	1,143,379	1,263,415	1,379,970	
Total unrelated revenue						
Total excludable revenue	243,555	266,653	304,939	376,275	389,108	
Total Assets	1,437,360	1,365,477	1,211,715	1,191,066	1,309,491	
Total Liabilities	70,183	83,873	87,836	62,225	102,786	
Net Fund Balances	1,367,177	1,281,604	1,123,879	1,128,841	1,206,705	

Federal Statements

Taxable Interest on Investments

Description	Amount	Unrelated Business	Exclusion Code	Postal Code	Acquired after 6/30/75	US Obs ($ or %)
INTEREST INCOME	$ 798					
Total	$ 798					

Federal Statements

Schedule A, Part II, Line 1(e)

Description	Amount
RENT INCOME - HUD	$ 990,862
Total	$ 990,862

Schedule A, Part II, Line 12 - Current year

Description	Amount
RENT INCOME - TENANTS	$ 460,978
LAUNDRY INCOME	4,615
VACANCIES	-92,080
TENANT CHARGES	10,405
Late fees	2,355
Key Charges	315
Damages	1,722
INTEREST INCOME	798
Total	$ 389,108

EXHIBIT 15E.3

NON-PROFIT FORMATION DOCUMENTS

Form 990 for tax year 2018

Forms 990 / 990-EZ Return Summary

For calendar year 2018, or tax year beginning 04/01/18 , and ending 03/31/19

Northern Nevada Building & Construc**-***6297
Trades Council Development Corp

Net Asset / Fund Balance at Beginning of Year			1,123,879
Revenue			
Contributions	887,140		
Program service revenue	375,907		
Investment income	368		
Capital gain / loss			
Fundraising / Gaming:			
Gross revenue			
Direct expenses			
Net income			
Other income	0		
Total revenue		1,263,415	
Expenses			
Program services	1,142,888		
Management and general	115,564		
Fundraising			
Total expenses		1,258,452	
Excess / (deficit)			4,963
Changes			-1
Net Asset / Fund Balance at End of Year			1,128,841

Reconciliation of Revenue

Total revenue per financial statements	1,263,415
Less:	
Unrealized gains	
Donated services	
Recoveries	
Other	
Plus:	
Investment expenses	
Other	
Total revenue per return	1,263,415

Reconciliation of Expenses

Total expenses per financial statements	1,258,453
Less:	
Donated services	
Prior year adjustments	
Losses	
Other	
Plus:	
Investment expenses	
Other	
Total expenses per return	1,258,452

Balance Sheet

	Beginning	Ending	Differences
Assets	1,211,715	1,191,066	
Liabilities	87,836	62,225	
Net assets	1,123,879	1,128,841	4,962

Miscellaneous Information

Amended return	
Return / extended due date	02/18/20
Failure to file penalty	

Form **8879-EO**

Department of the Treasury
Internal Revenue Service

IRS *e-file* Signature Authorization for an Exempt Organization

For calendar year 2018, or fiscal year beginning 4/01, 2018, and ending 3/31, 20 19

▶ **Do not send to the IRS. Keep for your records.**
▶ **Go to** *www.irs.gov/Form8879EO* **for the latest information.**

OMB No. 1545-1878

2018

Name of exempt organization	Employer identification number
Northern Nevada Building & Construc Trades Council Development Corp	**-***6297

Name and title of officer: Paul McKenzie
Sec/ Tres

Part I Type of Return and Return Information (Whole Dollars Only)

Check the box for the return for which you are using this Form 8879-EO and enter the applicable amount, if any, from the return. If you check the box on line **1a, 2a, 3a, 4a,** or **5a,** below, and the amount on that line for the return being filed with this form was blank, then leave line **1b, 2b, 3b, 4b,** or **5b,** whichever is applicable, blank (do not enter -0-). But, if you entered -0- on the return, then enter -0- on the applicable line below. **Do not** complete more than one line in Part I.

1a Form 990 check here ▶ [X]	**b Total revenue,** if any (Form 990, Part VIII, column (A), line 12)	**1b**	1,263,415
2a Form 990-EZ check here ▶ [ ]	**b Total revenue,** if any (Form 990-EZ, line 9)	**2b**	
3a Form 1120-POL check here ▶ [ ]	**b Total tax** (Form 1120-POL, line 22)	**3b**	
4a Form 990-PF check here ▶ [ ]	**b Tax based on investment income** (Form 990-PF, Part VI, line 5)	**4b**	
5a Form 8868 check here ▶ [ ]	**b Balance Due** (Form 8868, line 3c)	**5b**	

Part II Declaration and Signature Authorization of Officer

Under penalties of perjury, I declare that I am an officer of the above organization and that I have examined a copy of the organization's 2018 electronic return and accompanying schedules and statements and to the best of my knowledge and belief, they are true, correct, and complete. I further declare that the amount in Part I above is the amount shown on the copy of the organization's electronic return. I consent to allow my intermediate service provider, transmitter, or electronic return originator (ERO) to send the organization's return to the IRS and to receive from the IRS **(a)** an acknowledgement of receipt or reason for rejection of the transmission, **(b)** the reason for any delay in processing the return or refund, and **(c)** the date of any refund. If applicable, I authorize the U.S. Treasury and its designated Financial Agent to initiate an electronic funds withdrawal (direct debit) entry to the financial institution account indicated in the tax preparation software for payment of the organization's federal taxes owed on this return, and the financial institution to debit the entry to this account. To revoke a payment, I must contact the U.S. Treasury Financial Agent at 1-888-353-4537 no later than 2 business days prior to the payment (settlement) date. I also authorize the financial institutions involved in the processing of the electronic payment of taxes to receive confidential information necessary to answer inquiries and resolve issues related to the payment. I have selected a personal identification number (PIN) as my signature for the organization's electronic return and, if applicable, the organization's consent to electronic funds withdrawal.

Officer's PIN: check one box only

[X] I authorize Steele & Associates, LLC (ERO firm name) to enter my PIN 98657 as my signature
Enter five numbers, but do not enter all zeros

on the organization's tax year 2018 electronically filed return. If I have indicated within this return that a copy of the return is being filed with a state agency(ies) regulating charities as part of the IRS Fed/State program, I also authorize the aforementioned ERO to enter my PIN on the return's disclosure consent screen.

[ ] As an officer of the organization, I will enter my PIN as my signature on the organization's tax year 2018 electronically filed return. If I have indicated within this return that a copy of the return is being filed with a state agency(ies) regulating charities as part of the IRS Fed/State program, I will enter my PIN on the return's disclosure consent screen.

Officer's signature ▶ Date ▶ 08/11/19

Part III Certification and Authentication

ERO's EFIN/PIN. Enter your six-digit electronic filing identification number (EFIN) followed by your five-digit self-selected PIN. **********
Do not enter all zeros

I certify that the above numeric entry is my PIN, which is my signature on the 2018 electronically filed return for the organization indicated above. I confirm that I am submitting this return in accordance with the requirements of **Pub. 4163,** Modernized e-File (MeF) Information for Authorized IRS *e-file* Providers for Business Returns.

ERO's signature ▶ Jonathan S. Steele, CPA Date ▶ 08/11/19

ERO Must Retain This Form — See Instructions
Do Not Submit This Form to the IRS Unless Requested To Do So

For Paperwork Reduction Act Notice, see back of form. Form **8879-EO** (2018)

DAA

Form **990**

Department of the Treasury
Internal Revenue Service

Return of Organization Exempt From Income Tax

Under section 501(c), 527, or 4947(a)(1) of the Internal Revenue Code (except private foundations)

▶ Do not enter social security numbers on this form as it may be made public.

▶ Go to *www.irs.gov/Form990* for instructions and the latest information.

OMB No. 1545-0047

2018

Open to Public Inspection

A For the 2018 calendar year, or tax year beginning 04/01/18 , and ending 03/31/19

B Check if applicable:
- ☐ Address change
- ☐ Name change
- ☐ Initial return
- ☐ Final return/ terminated
- ☐ Amended return
- ☐ Application pending

C Name of organization: Northern Nevada Building & Construc Trades Council Development Corp

Doing business as: Carville Park Apartments

Number and street (or P.O. box if mail is not delivered to street address): 1819 Hymer Avenue #106

Room/suite:

City or town, state or province, country, and ZIP or foreign postal code: Sparks NV 89431

D Employer identification number: **-***6297

E Telephone number: 775-355-9200

G Gross receipts$ 1,263,415

F Name and address of principal officer: Todd Koch

H(a) Is this a group return for subordinates? ☐ Yes ☒ No

H(b) Are all subordinates included? ☐ Yes ☐ No

If "No," attach a list. (see instructions)

I Tax-exempt status: ☒ 501(c)(3) ☐ 501(c) ( ) ◀ (insert no.) ☐ 4947(a)(1) or ☐ 527

J Website: ▶ N/A

H(c) Group exemption number ▶

K Form of organization: ☒ Corporation ☐ Trust ☐ Association ☐ Other ▶

L Year of formation: 1979

M State of legal domicile: NV

Part I Summary

1 Briefly describe the organization's mission or most significant activities:
To Provide affordable housing for low-income, elderly, and disabled persons in a 208 unit apartment complex.

2 Check this box ▶ ☐ if the organization discontinued its operations or disposed of more than 25% of its net assets.

3	Number of voting members of the governing body (Part VI, line 1a)	3	3
4	Number of independent voting members of the governing body (Part VI, line 1b)	4	0
5	Total number of individuals employed in calendar year 2018 (Part V, line 2a)	5	7
6	Total number of volunteers (estimate if necessary)	6	9
7a	Total unrelated business revenue from Part VIII, column (C), line 12	7a	0
b	Net unrelated business taxable income from Form 990-T, line 38	7b	0

		Prior Year	Current Year
8	Contributions and grants (Part VIII, line 1h)	838,440	887,140
9	Program service revenue (Part VIII, line 2g)	304,675	375,907
10	Investment income (Part VIII, column (A), lines 3, 4, and 7d)	264	368
11	Other revenue (Part VIII, column (A), lines 5, 6d, 8c, 9c, 10c, and 11e)		0
12	Total revenue – add lines 8 through 11 (must equal Part VIII, column (A), line 12)	1,143,379	1,263,415
13	Grants and similar amounts paid (Part IX, column (A), lines 1–3)		0
14	Benefits paid to or for members (Part IX, column (A), line 4)		0
15	Salaries, other compensation, employee benefits (Part IX, column (A), lines 5–10)	353,211	389,552
16a	Professional fundraising fees (Part IX, column (A), line 11e)		0
b	Total fundraising expenses (Part IX, column (D), line 25) ▶ 0		
17	Other expenses (Part IX, column (A), lines 11a–11d, 11f–24e)	947,891	868,900
18	Total expenses. Add lines 13–17 (must equal Part IX, column (A), line 25)	1,301,102	1,258,452
19	Revenue less expenses. Subtract line 18 from line 12	-157,723	4,963

		Beginning of Current Year	End of Year
20	Total assets (Part X, line 16)	1,211,715	1,191,066
21	Total liabilities (Part X, line 26)	87,836	62,225
22	Net assets or fund balances. Subtract line 21 from line 20	1,123,879	1,128,841

Part II Signature Block

Under penalties of perjury, I declare that I have examined this return, including accompanying schedules and statements, and to the best of my knowledge and belief, it is true, correct, and complete. Declaration of preparer (other than officer) is based on all information of which preparer has any knowledge.

Sign Here

▶ Signature of officer — Date

▶ Paul McKenzie Sec/ Tres
Type or print name and title

Paid Preparer Use Only

Print/Type preparer's name	Preparer's signature	Date	Check ☐ if self-employed	PTIN
Jonathan S. Steele, CPA	Jonathan S. Steele, CPA	08/11/22		*********

Firm's name ▶ Steele & Associates, LLC — Firm's EIN ▶ **-***9248

Firm's address ▶ 611 N Nevada St Carson City, NV 89703-3968 — Phone no. 775-882-7198

May the IRS discuss this return with the preparer shown above? (see instructions) ☒ Yes ☐ No

For Paperwork Reduction Act Notice, see the separate instructions.

DAA

Form **990** (2018)

Part III Statement of Program Service Accomplishments

Check if Schedule O contains a response or note to any line in this Part III ☐

1 Briefly describe the organization's mission:

To Provide affordable housing for low-income, elderly, and disabled persons in a 208 unit apartment complex.

2 Did the organization undertake any significant program services during the year which were not listed on the prior Form 990 or 990-EZ? ☐ Yes ☒ No

If "Yes," describe these new services on Schedule O.

3 Did the organization cease conducting, or make significant changes in how it conducts, any program services? ☐ Yes ☒ No

If "Yes," describe these changes on Schedule O.

4 Describe the organization's program service accomplishments for each of its three largest program services, as measured by expenses. Section 501(c)(3) and 501(c)(4) organizations are required to report the amount of grants and allocations to others, the total expenses, and revenue, if any, for each program service reported.

4a (Code:) (Expenses $ 1,142,888 including grants of$) (Revenue $ 375,907)

Provided affordable housing for low-income, elderly, and disabled persons in a 208 unit apartment complex.

4b (Code:) (Expenses $ including grants of$) (Revenue $)

N/A

4c (Code:) (Expenses $ including grants of$) (Revenue $)

N/A

4d Other program services (Describe in Schedule O.)

(Expenses $ including grants of$) (Revenue $)

4e Total program service expenses ▶ 1,142,888

Part IV Checklist of Required Schedules

			Yes	No
1	Is the organization described in section 501(c)(3) or 4947(a)(1) (other than a private foundation)? *If "Yes," complete Schedule A*	1	X	
2	Is the organization required to complete *Schedule B, Schedule of Contributors* (see instructions)?	2		X
3	Did the organization engage in direct or indirect political campaign activities on behalf of or in opposition to candidates for public office? *If "Yes," complete Schedule C, Part I*	3		X
4	**Section 501(c)(3) organizations.** Did the organization engage in lobbying activities, or have a section 501(h) election in effect during the tax year? *If "Yes," complete Schedule C, Part II*	4		X
5	Is the organization a section 501(c)(4), 501(c)(5), or 501(c)(6) organization that receives membership dues, assessments, or similar amounts as defined in Revenue Procedure 98-19? *If "Yes," complete Schedule C, Part III*	5		X
6	Did the organization maintain any donor advised funds or any similar funds or accounts for which donors have the right to provide advice on the distribution or investment of amounts in such funds or accounts? *If "Yes," complete Schedule D, Part I*	6		X
7	Did the organization receive or hold a conservation easement, including easements to preserve open space, the environment, historic land areas, or historic structures? *If "Yes," complete Schedule D, Part II*	7		X
8	Did the organization maintain collections of works of art, historical treasures, or other similar assets? *If "Yes," complete Schedule D, Part III*	8		X
9	Did the organization report an amount in Part X, line 21, for escrow or custodial account liability, serve as a custodian for amounts not listed in Part X; or provide credit counseling, debt management, credit repair, or debt negotiation services? *If "Yes," complete Schedule D, Part IV*	9		X
10	Did the organization, directly or through a related organization, hold assets in temporarily restricted endowments, permanent endowments, or quasi-endowments? *If "Yes," complete Schedule D, Part V*	10		X
11	If the organization's answer to any of the following questions is "Yes," then complete Schedule D, Parts VI, VII, VIII, IX, or X as applicable.			
a	Did the organization report an amount for land, buildings, and equipment in Part X, line 10? *If "Yes," complete Schedule D, Part VI*	11a	X	
b	Did the organization report an amount for investments—other securities in Part X, line 12 that is 5% or more of its total assets reported in Part X, line 16? *If "Yes," complete Schedule D, Part VII*	11b		X
c	Did the organization report an amount for investments—program related in Part X, line 13 that is 5% or more of its total assets reported in Part X, line 16? *If "Yes," complete Schedule D, Part VIII*	11c		X
d	Did the organization report an amount for other assets in Part X, line 15 that is 5% or more of its total assets reported in Part X, line 16? *If "Yes," complete Schedule D, Part IX*	11d		X
e	Did the organization report an amount for other liabilities in Part X, line 25? *If "Yes," complete Schedule D, Part X*	11e	X	
f	Did the organization's separate or consolidated financial statements for the tax year include a footnote that addresses the organization's liability for uncertain tax positions under FIN 48 (ASC 740)? *If "Yes," complete Schedule D, Part X*	11f		X
12a	Did the organization obtain separate, independent audited financial statements for the tax year? *If "Yes," complete Schedule D, Parts XI and XII*	12a	X	
b	Was the organization included in consolidated, independent audited financial statements for the tax year? *If "Yes," and if the organization answered "No" to line 12a, then completing Schedule D, Parts XI and XII is optional*	12b		X
13	Is the organization a school described in section 170(b)(1)(A)(ii)? *If "Yes," complete Schedule E*	13		X
14a	Did the organization maintain an office, employees, or agents outside of the United States?	14a		X
b	Did the organization have aggregate revenues or expenses of more than $10,000 from grantmaking, fundraising, business, investment, and program service activities outside the United States, or aggregate foreign investments valued at $100,000 or more? *If "Yes," complete Schedule F, Parts I and IV*	14b		X
15	Did the organization report on Part IX, column (A), line 3, more than $5,000 of grants or other assistance to or for any foreign organization? *If "Yes," complete Schedule F, Parts II and IV*	15		X
16	Did the organization report on Part IX, column (A), line 3, more than $5,000 of aggregate grants or other assistance to or for foreign individuals? *If "Yes," complete Schedule F, Parts III and IV*	16		X
17	Did the organization report a total of more than $15,000 of expenses for professional fundraising services on Part IX, column (A), lines 6 and 11e? *If "Yes," complete Schedule G, Part I* (see instructions)	17		X
18	Did the organization report more than $15,000 total of fundraising event gross income and contributions on Part VIII, lines 1c and 8a? *If "Yes," complete Schedule G, Part II*	18		X
19	Did the organization report more than $15,000 of gross income from gaming activities on Part VIII, line 9a? *If "Yes," complete Schedule G, Part III*	19		X
20a	Did the organization operate one or more hospital facilities? *If "Yes," complete Schedule H*	20a		X
b	If "Yes" to line 20a, did the organization attach a copy of its audited financial statements to this return?	20b		
21	Did the organization report more than $5,000 of grants or other assistance to any domestic organization or domestic government on Part IX, column (A), line 1? *If "Yes," complete Schedule I, Parts I and II*	21		X

Part IV Checklist of Required Schedules *(continued)*

			Yes	No
22	Did the organization report more than $5,000 of grants or other assistance to or for domestic individuals on Part IX, column (A), line 2? *If "Yes," complete Schedule I, Parts I and III*	22		X
23	Did the organization answer "Yes" to Part VII, Section A, line 3, 4, or 5 about compensation of the organization's current and former officers, directors, trustees, key employees, and highest compensated employees? *If "Yes," complete Schedule J*	23		X
24a	Did the organization have a tax-exempt bond issue with an outstanding principal amount of more than $100,000 as of the last day of the year, that was issued after December 31, 2002? *If "Yes," answer lines 24b through 24d and complete Schedule K. If "No," go to line 25a*	24a		X
b	Did the organization invest any proceeds of tax-exempt bonds beyond a temporary period exception?	24b		
c	Did the organization maintain an escrow account other than a refunding escrow at any time during the year to defease any tax-exempt bonds?	24c		
d	Did the organization act as an "on behalf of" issuer for bonds outstanding at any time during the year?	24d		
25a	**Section 501(c)(3), 501(c)(4), and 501(c)(29) organizations.** Did the organization engage in an excess benefit transaction with a disqualified person during the year? *If "Yes," complete Schedule L, Part I*	25a		X
b	Is the organization aware that it engaged in an excess benefit transaction with a disqualified person in a prior year, and that the transaction has not been reported on any of the organization's prior Forms 990 or 990-EZ? *If "Yes," complete Schedule L, Part I*	25b		X
26	Did the organization report any amount on Part X, line 5, 6, or 22 for receivables from or payables to any current or former officers, directors, trustees, key employees, highest compensated employees, or disqualified persons? *If "Yes," complete Schedule L, Part II*	26		X
27	Did the organization provide a grant or other assistance to an officer, director, trustee, key employee, substantial contributor or employee thereof, a grant selection committee member, or to a 35% controlled entity or family member of any of these persons? *If "Yes," complete Schedule L, Part III*	27		X
28	Was the organization a party to a business transaction with one of the following parties (see Schedule L, Part IV instructions for applicable filing thresholds, conditions, and exceptions):			
a	A current or former officer, director, trustee, or key employee? *If "Yes," complete Schedule L, Part IV*	28a		X
b	A family member of a current or former officer, director, trustee, or key employee? *If "Yes," complete Schedule L, Part IV*	28b		X
c	An entity of which a current or former officer, director, trustee, or key employee (or a family member thereof) was an officer, director, trustee, or direct or indirect owner? *If "Yes," complete Schedule L, Part IV*	28c	X	
29	Did the organization receive more than $25,000 in non-cash contributions? *If "Yes," complete Schedule M*	29		X
30	Did the organization receive contributions of art, historical treasures, or other similar assets, or qualified conservation contributions? *If "Yes," complete Schedule M*	30		X
31	Did the organization liquidate, terminate, or dissolve and cease operations? *If "Yes," complete Schedule N, Part I*	31		X
32	Did the organization sell, exchange, dispose of, or transfer more than 25% of its net assets? *If "Yes," complete Schedule N, Part II*	32		X
33	Did the organization own 100% of an entity disregarded as separate from the organization under Regulations sections 301.7701-2 and 301.7701-3? *If "Yes," complete Schedule R, Part I*	33		X
34	Was the organization related to any tax-exempt or taxable entity? *If "Yes," complete Schedule R, Part II, III, or IV, and Part V, line 1*	34		X
35a	Did the organization have a controlled entity within the meaning of section 512(b)(13)?	35a		X
b	If "Yes" to line 35a, did the organization receive any payment from or engage in any transaction with a controlled entity within the meaning of section 512(b)(13)? *If "Yes," complete Schedule R, Part V, line 2*	35b		
36	**Section 501(c)(3) organizations.** Did the organization make any transfers to an exempt non-charitable related organization? *If "Yes," complete Schedule R, Part V, line 2*	36		X
37	Did the organization conduct more than 5% of its activities through an entity that is not a related organization and that is treated as a partnership for federal income tax purposes? *If "Yes," complete Schedule R, Part VI*	37		X
38	Did the organization complete Schedule O and provide explanations in Schedule O for Part VI, lines 11b and 19? **Note.** All Form 990 filers are required to complete Schedule O.	38	X	

Part V Statements Regarding Other IRS Filings and Tax Compliance

Check if Schedule O contains a response or note to any line in this Part V ☐

				Yes	No
1a	Enter the number reported in Box 3 of Form 1096. Enter -0- if not applicable	1a	1		
b	Enter the number of Forms W-2G included in line 1a. Enter -0- if not applicable	1b	0		
c	Did the organization comply with backup withholding rules for reportable payments to vendors and reportable gaming (gambling) winnings to prize winners?	1c			

Part V Statements Regarding Other IRS Filings and Tax Compliance *(continued)*

			Yes	No
2a	Enter the number of employees reported on Form W-3, Transmittal of Wage and Tax Statements, filed for the calendar year ending with or within the year covered by this return 2a 7			
b	If at least one is reported on line 2a, did the organization file all required federal employment tax returns?	2b	X	
	Note. If the sum of lines 1a and 2a is greater than 250, you may be required to *e-file* (see instructions)			
3a	Did the organization have unrelated business gross income of $1,000 or more during the year?	3a		X
b	If "Yes," has it filed a Form 990-T for this year? *If "No" to line 3b, provide an explanation in Schedule O*	3b		
4a	At any time during the calendar year, did the organization have an interest in, or a signature or other authority over, a financial account in a foreign country (such as a bank account, securities account, or other financial account)?	4a		X
b	If "Yes," enter the name of the foreign country: ▶			
	See instructions for filing requirements for FinCEN Form 114, Report of Foreign Bank and Financial Accounts (FBAR).			
5a	Was the organization a party to a prohibited tax shelter transaction at any time during the tax year?	5a		X
b	Did any taxable party notify the organization that it was or is a party to a prohibited tax shelter transaction?	5b		X
c	If "Yes" to line 5a or 5b, did the organization file Form 8886-T?	5c		
6a	Does the organization have annual gross receipts that are normally greater than $100,000, and did the organization solicit any contributions that were not tax deductible as charitable contributions?	6a		X
b	If "Yes," did the organization include with every solicitation an express statement that such contributions or gifts were not tax deductible?	6b		
7	**Organizations that may receive deductible contributions under section 170(c).**			
a	Did the organization receive a payment in excess of $75 made partly as a contribution and partly for goods and services provided to the payor?	7a		
b	If "Yes," did the organization notify the donor of the value of the goods or services provided?	7b		
c	Did the organization sell, exchange, or otherwise dispose of tangible personal property for which it was required to file Form 8282?	7c		
d	If "Yes," indicate the number of Forms 8282 filed during the year 7d			
e	Did the organization receive any funds, directly or indirectly, to pay premiums on a personal benefit contract?	7e		
f	Did the organization, during the year, pay premiums, directly or indirectly, on a personal benefit contract?	7f		
g	If the organization received a contribution of qualified intellectual property, did the organization file Form 8899 as required?	7g		
h	If the organization received a contribution of cars, boats, airplanes, or other vehicles, did the organization file a Form 1098-C?	7h		
8	**Sponsoring organizations maintaining donor advised funds.** Did a donor advised fund maintained by the sponsoring organization have excess business holdings at any time during the year?	8		
9	**Sponsoring organizations maintaining donor advised funds.**			
a	Did the sponsoring organization make any taxable distributions under section 4966?	9a		
b	Did the sponsoring organization make a distribution to a donor, donor advisor, or related person?	9b		
10	**Section 501(c)(7) organizations.** Enter:			
a	Initiation fees and capital contributions included on Part VIII, line 12 10a			
b	Gross receipts, included on Form 990, Part VIII, line 12, for public use of club facilities 10b			
11	**Section 501(c)(12) organizations.** Enter:			
a	Gross income from members or shareholders 11a			
b	Gross income from other sources (Do not net amounts due or paid to other sources against amounts due or received from them.) 11b			
12a	**Section 4947(a)(1) non-exempt charitable trusts.** Is the organization filing Form 990 in lieu of Form 1041?	12a		
b	If "Yes," enter the amount of tax-exempt interest received or accrued during the year 12b			
13	**Section 501(c)(29) qualified nonprofit health insurance issuers.**			
a	Is the organization licensed to issue qualified health plans in more than one state?	13a		
	Note. See the instructions for additional information the organization must report on Schedule O.			
b	Enter the amount of reserves the organization is required to maintain by the states in which the organization is licensed to issue qualified health plans 13b			
c	Enter the amount of reserves on hand 13c			
14a	Did the organization receive any payments for indoor tanning services during the tax year?	14a		X
b	If "Yes," has it filed a Form 720 to report these payments? *If "No," provide an explanation in Schedule O*	14b		
15	Is the organization subject to the section 4960 tax on payment(s) of more than $1,000,000 in remuneration or excess parachute payment(s) during the year? If "Yes," see instructions and file Form 4720, Schedule N.	15		X
16	Is the organization an educational institution subject to the section 4968 excise tax on net investment income? If "Yes," complete Form 4720, Schedule O.	16		X

Part VI **Governance, Management, and Disclosure** *For each "Yes" response to lines 2 through 7b below, and for a "No" response to line 8a, 8b, or 10b below, describe the circumstances, processes, or changes in Schedule O. See instructions.*

Check if Schedule O contains a response or note to any line in this Part VI ..... [X]

Section A. Governing Body and Management

				Yes	No
1a	Enter the number of voting members of the governing body at the end of the tax year	1a	3		
	If there are material differences in voting rights among members of the governing body, or if the governing body delegated broad authority to an executive committee or similar committee, explain in Schedule O.				
b	Enter the number of voting members included in line 1a, above, who are independent	1b	0		
2	Did any officer, director, trustee, or key employee have a family relationship or a business relationship with any other officer, director, trustee, or key employee?	2			X
3	Did the organization delegate control over management duties customarily performed by or under the direct supervision of officers, directors, or trustees, or key employees to a management company or other person?	3			X
4	Did the organization make any significant changes to its governing documents since the prior Form 990 was filed?	4			X
5	Did the organization become aware during the year of a significant diversion of the organization's assets?	5			X
6	Did the organization have members or stockholders?	6			X
7a	Did the organization have members, stockholders, or other persons who had the power to elect or appoint one or more members of the governing body?	7a			X
b	Are any governance decisions of the organization reserved to (or subject to approval by) members, stockholders, or persons other than the governing body?	7b			X
8	Did the organization contemporaneously document the meetings held or written actions undertaken during the year by the following:				
a	The governing body?	8a		X	
b	Each committee with authority to act on behalf of the governing body?	8b		X	
9	Is there any officer, director, trustee, or key employee listed in Part VII, Section A, who cannot be reached at the organization's mailing address? *If "Yes," provide the names and addresses in Schedule O*	9			X

Section B. Policies *(This Section B requests information about policies not required by the Internal Revenue Code.)*

			Yes	No
10a	Did the organization have local chapters, branches, or affiliates?	10a		X
b	If "Yes," did the organization have written policies and procedures governing the activities of such chapters, affiliates, and branches to ensure their operations are consistent with the organization's exempt purposes?	10b		
11a	Has the organization provided a complete copy of this Form 990 to all members of its governing body before filing the form?	11a		X
b	Describe in Schedule O the process, if any, used by the organization to review this Form 990.			
12a	Did the organization have a written conflict of interest policy? *If "No," go to line 13*	12a		X
b	Were officers, directors, or trustees, and key employees required to disclose annually interests that could give rise to conflicts?	12b		
c	Did the organization regularly and consistently monitor and enforce compliance with the policy? *If "Yes," describe in Schedule O how this was done*	12c		
13	Did the organization have a written whistleblower policy?	13		X
14	Did the organization have a written document retention and destruction policy?	14	X	
15	Did the process for determining compensation of the following persons include a review and approval by independent persons, comparability data, and contemporaneous substantiation of the deliberation and decision?			
a	The organization's CEO, Executive Director, or top management official	15a		X
b	Other officers or key employees of the organization	15b	X	
	If "Yes" to line 15a or 15b, describe the process in Schedule O (see instructions).			
16a	Did the organization invest in, contribute assets to, or participate in a joint venture or similar arrangement with a taxable entity during the year?	16a		X
b	If "Yes," did the organization follow a written policy or procedure requiring the organization to evaluate its participation in joint venture arrangements under applicable federal tax law, and take steps to safeguard the organization's exempt status with respect to such arrangements?	16b		

Section C. Disclosure

17 List the states with which a copy of this Form 990 is required to be filed ▶ None

18 Section 6104 requires an organization to make its Forms 1023 (1024 or 1024-A if applicable), 990, and 990-T (Section 501(c)(3)s only) available for public inspection. Indicate how you made these available. Check all that apply.

☐ Own website ☐ Another's website ☒ Upon request ☐ Other *(explain in Schedule O)*

19 Describe in Schedule O whether (and if so, how) the organization made its governing documents, conflict of interest policy, and financial statements available to the public during the tax year.

20 State the name, address, and telephone number of the person who possesses the organization's books and records ▶

No. Nevada Building & Construction 1819 Hymer Avenue, Suite 106
Sparks NV 89431 775-355-9200

Part VII Compensation of Officers, Directors, Trustees, Key Employees, Highest Compensated Employees, and Independent Contractors

Check if Schedule O contains a response or note to any line in this Part VII ☐

Section A. Officers, Directors, Trustees, Key Employees, and Highest Compensated Employees

1a Complete this table for all persons required to be listed. Report compensation for the calendar year ending with or within the organization's tax year.

- List all of the organization's **current** officers, directors, trustees (whether individuals or organizations), regardless of amount of compensation. Enter -0- in columns (D), (E), and (F) if no compensation was paid.
- List all of the organization's **current** key employees, if any. See instructions for definition of "key employee."
- List the organization's five **current** highest compensated employees (other than an officer, director, trustee, or key employee) who received reportable compensation (Box 5 of Form W-2 and/or Box 7 of Form 1099-MISC) of more than $100,000 from the organization and any related organizations.
- List all of the organization's **former** officers, key employees, and highest compensated employees who received more than $100,000 of reportable compensation from the organization and any related organizations.
- List all of the organization's **former directors or trustees** that received, in the capacity as a former director or trustee of the organization, more than $10,000 of reportable compensation from the organization and any related organizations.

List persons in the following order: individual trustees or directors; institutional trustees; officers; key employees; highest compensated employees; and former such persons.

☒ Check this box if neither the organization nor any related organization compensated any current officer, director, or trustee.

(A) Name and Title	(B) Average hours per week (list any hours for related organizations below dotted line)	(C) Position (do not check more than one box, unless person is both an officer and a director/trustee)						(D) Reportable compensation from the organization (W-2/1099-MISC)	(E) Reportable compensation from related organizations (W-2/1099-MISC)	(F) Estimated amount of other compensation from the organization and related organizations
		Individual trustee or director	Institutional trustee	Officer	Key employee	Highest compensated employee	Former			
(1) Paul McKenzie	0.00									
Sec/ Tres	0.00	X		X				0	0	0
(2) Todd Koch	0.00									
President	0.00	X		X				0	0	0
(3) John Seymour	0.00									
Vice President	0.00	X		X				0	0	0
(4)										
(5)										
(6)										
(7)										
(8)										
(9)										
(10)										
(11)										

Part VII Section A. Officers, Directors, Trustees, Key Employees, and Highest Compensated Employees *(continued)*

(A) Name and title	(B) Average hours per week (list any hours for related organizations below dotted line)	(C) Position (do not check more than one box, unless person is both an officer and a director/trustee)						(D) Reportable compensation from the organization (W-2/1099-MISC)	(E) Reportable compensation from related organizations (W-2/1099-MISC)	(F) Estimated amount of other compensation from the organization and related organizations
		Individual trustee or director	Institutional trustee	Officer	Key employee	Highest compensated employee	Former			
1b Sub-total ▶										
c Total from continuation sheets to Part VII, Section A ▶										
d Total (add lines 1b and 1c) ▶										

2 Total number of individuals (including but not limited to those listed above) who received more than $100,000 of reportable compensation from the organization ▶0

		Yes	No
3	Did the organization list any **former** officer, director, or trustee, key employee, or highest compensated employee on line 1a? *If "Yes," complete Schedule J for such individual*		X
4	For any individual listed on line 1a, is the sum of reportable compensation and other compensation from the organization and related organizations greater than $150,000? *If "Yes," complete Schedule J for such individual*		X
5	Did any person listed on line 1a receive or accrue compensation from any unrelated organization or individual for services rendered to the organization? *If "Yes," complete Schedule J for such person*		X

Section B. Independent Contractors

1 Complete this table for your five highest compensated independent contractors that received more than $100,000 of compensation from the organization. Report compensation for the calendar year ending with or within the organization's tax year.

(A) Name and business address	(B) Description of services	(C) Compensation

2 Total number of independent contractors (including but not limited to those listed above) who received more than $100,000 of compensation from the organization ▶ 0

Part VIII Statement of Revenue

Check if Schedule O contains a response or note to any line in this Part VIII ☐

			(A) Total revenue	(B) Related or exempt function revenue	(C) Unrelated business revenue	(D) Revenue excluded from tax under sections 512-514
Contributions, Gifts, Grants and Other Similar Amounts	1a Federated campaigns	1a				
	b Membership dues	1b				
	c Fundraising events	1c				
	d Related organizations	1d				
	e Government grants (contributions)	1e	887,140			
	f All other contributions, gifts, grants, and similar amounts not included above	1f				
	g Noncash contributions included in lines 1a-1f: $					
	h **Total.** Add lines 1a–1f ▶		887,140			
Program Service Revenue		Busn. Code				
	2a RENT INCOME - TENANTS	531110	419,932	419,932		
	b TENANT CHARGES	531110	12,817	12,817		
	c LAUNDRY INCOME	531110	4,399	4,399		
	d Tenant Security Dep Forfeited	531110	3,196	3,196		
	e Late fees	531110	2,232	2,232		
	f All other program service revenue	531110	-66,669	-66,669		
	g **Total.** Add lines 2a–2f ▶		375,907			
Other Revenue	3 Investment income (including dividends, interest, and other similar amounts) ▶		368	368		
	4 Income from investment of tax-exempt bond proceeds ▶					
	5 Royalties ▶					
		(i) Real	(ii) Personal			
	6a Gross rents					
	b Less: rental exps.					
	c Rental inc. or (loss)					
	d Net rental income or (loss) ▶					
		(i) Securities	(ii) Other			
	7a Gross amount from sales of assets other than inventory					
	b Less: cost or other basis & sales exps					
	c Gain or (loss)					
	d Net gain or (loss) ▶					
	8a Gross income from fundraising events (not including $ ... of contributions reported on line 1c). See Part IV, line 18 a					
	b Less: direct expenses b					
	c Net income or (loss) from fundraising events ▶					
	9a Gross income from gaming activities. See Part IV, line 19 a					
	b Less: direct expenses b					
	c Net income or (loss) from gaming activities ▶					
	10a Gross sales of inventory, less returns and allowances a					
	b Less: cost of goods sold b					
	c Net income or (loss) from sales of inventory ▶					
	Miscellaneous Revenue	Busn. Code				
	11a					
	b					
	c					
	d All other revenue					
	e **Total.** Add lines 11a–11d ▶					
	12 **Total revenue.** See instructions. ▶		1,263,415	376,275	0	0

Form **990** (2018)

DAA

Part IX Statement of Functional Expenses

Section 501(c)(3) and 501(c)(4) organizations must complete all columns. All other organizations must complete column (A).

Check if Schedule O contains a response or note to any line in this Part IX ☐

Do not include amounts reported on lines 6b, 7b, 8b, 9b, and 10b of Part VIII.	(A) Total expenses	(B) Program service expenses	(C) Management and general expenses	(D) Fundraising expenses
1 Grants and other assistance to domestic organizations and domestic governments. See Part IV, line 21				
2 Grants and other assistance to domestic individuals. See Part IV, line 22				
3 Grants and other assistance to foreign organizations, foreign governments, and foreign individuals. See Part IV, lines 15 and 16				
4 Benefits paid to or for members				
5 Compensation of current officers, directors, trustees, and key employees				
6 Compensation not included above, to disqualified persons (as defined under section 4958(f)(1)) and persons described in section 4958(c)(3)(B)				
7 Other salaries and wages	273,656	236,663	36,993	
8 Pension plan accruals and contributions (include section 401(k) and 403(b) employer contributions)	36,945	36,945		
9 Other employee benefits	55,650	55,650		
10 Payroll taxes	23,301	23,301		
11 Fees for services (non-employees):				
a Management	117,312	117,312		
b Legal				
c Accounting	22,480	15,736	6,744	
d Lobbying				
e Professional fundraising services. See Part IV, line 17				
f Investment management fees				
g Other. (If line 11g amount exceeds 10% of line 25, column (A) amount, list line 11g expenses on Schedule O.)				
12 Advertising and promotion	1,165	1,165		
13 Office expenses	46,970	46,970		
14 Information technology				
15 Royalties				
16 Occupancy	537,092	483,910	53,182	
17 Travel	608		608	
18 Payments of travel or entertainment expenses for any federal, state, or local public officials				
19 Conferences, conventions, and meetings				
20 Interest				
21 Payments to affiliates				
22 Depreciation, depletion, and amortization	117,128	117,128		
23 Insurance	7,617	7,617		
24 Other expenses. Itemize expenses not covered above (List miscellaneous expenses in line 24e. If line 24e amount exceeds 10% of line 25, column (A) amount, list line 24e expenses on Schedule O.)				
a CONTINUING EDUCATION	14,640		14,640	
b MISC TAXES, LICENSES & IN	2,164		2,164	
c MISCELLANEOUS OPERATING	893		893	
d TENANT SEC. DEP. - REFUND	491	491		
e All other expenses	340		340	
25 Total functional expenses. Add lines 1 through 24e	1,258,452	1,142,888	115,564	0
26 **Joint costs.** Complete this line only if the organization reported in column (B) joint costs from a combined educational campaign and fundraising solicitation. Check here ▶ ☐ if following SOP 98-2 (ASC 958-720)				

Part X Balance Sheet

Check if Schedule O contains a response or note to any line in this Part X ☐

				(A) Beginning of year		(B) End of year
Assets	1	Cash—non-interest bearing		1,523	1	89,232
	2	Savings and temporary cash investments		48,868	2	53,415
	3	Pledges and grants receivable, net		2,931	3	3,197
	4	Accounts receivable, net			4	
	5	Loans and other receivables from current and former officers, directors, trustees, key employees, and highest compensated employees. Complete Part II of Schedule L			5	
	6	Loans and other receivables from other disqualified persons (as defined under section 4958(f)(1)), persons described in section 4958(c)(3)(B), and contributing employers and sponsoring organizations of section 501(c)(9) voluntary employees' beneficiary organizations (see instructions). Complete Part II of Schedule L			6	
	7	Notes and loans receivable, net		63,730	7	63,730
	8	Inventories for sale or use			8	
	9	Prepaid expenses and deferred charges		36,899	9	43,641
	10a	Land, buildings, and equipment: cost or other basis. Complete Part VI of Schedule D	10a 4,547,797			
	b	Less: accumulated depreciation	10b 3,627,207	1,035,224	10c	920,590
	11	Investments—publicly traded securities			11	
	12	Investments—other securities. See Part IV, line 11			12	
	13	Investments—program-related. See Part IV, line 11			13	
	14	Intangible assets			14	
	15	Other assets. See Part IV, line 11		22,540	15	17,261
	16	**Total assets.** Add lines 1 through 15 (must equal line 34)		1,211,715	16	1,191,066
Liabilities	17	Accounts payable and accrued expenses		37,583	17	19,233
	18	Grants payable			18	
	19	Deferred revenue		26,342	19	15,600
	20	Tax-exempt bond liabilities			20	
	21	Escrow or custodial account liability. Complete Part IV of Schedule D			21	
	22	Loans and other payables to current and former officers, directors, trustees, key employees, highest compensated employees, and disqualified persons. Complete Part II of Schedule L			22	
	23	Secured mortgages and notes payable to unrelated third parties			23	
	24	Unsecured notes and loans payable to unrelated third parties			24	
	25	Other liabilities (including federal income tax, payables to related third parties, and other liabilities not included on lines 17-24). Complete Part X of Schedule D		23,911	25	27,392
	26	**Total liabilities.** Add lines 17 through 25		87,836	26	62,225
Net Assets or Fund Balances		**Organizations that follow SFAS 117 (ASC 958), check here ▶ ☐ and complete lines 27 through 29, and lines 33 and 34.**				
	27	Unrestricted net assets			27	
	28	Temporarily restricted net assets			28	
	29	Permanently restricted net assets			29	
		Organizations that do not follow SFAS 117 (ASC 958), check here ▶ ☒ and complete lines 30 through 34.				
	30	Capital stock or trust principal, or current funds			30	
	31	Paid-in or capital surplus, or land, building, or equipment fund			31	
	32	Retained earnings, endowment, accumulated income, or other funds		1,123,879	32	1,128,841
	33	Total net assets or fund balances		1,123,879	33	1,128,841
	34	Total liabilities and net assets/fund balances		1,211,715	34	1,191,066

Form **990** (2018)

DAA

Part XI Reconciliation of Net Assets

Check if Schedule O contains a response or note to any line in this Part XI X

1	Total revenue (must equal Part VIII, column (A), line 12)	1	1,263,415
2	Total expenses (must equal Part IX, column (A), line 25)	2	1,258,452
3	Revenue less expenses. Subtract line 2 from line 1	3	4,963
4	Net assets or fund balances at beginning of year (must equal Part X, line 33, column (A))	4	1,123,879
5	Net unrealized gains (losses) on investments	5	
6	Donated services and use of facilities	6	
7	Investment expenses	7	
8	Prior period adjustments	8	
9	Other changes in net assets or fund balances (explain in Schedule O)	9	-1
10	Net assets or fund balances at end of year. Combine lines 3 through 9 (must equal Part X, line 33, column (B))	10	1,128,841

Part XII Financial Statements and Reporting

Check if Schedule O contains a response or note to any line in this Part XII .....

			Yes	No
1	Accounting method used to prepare the Form 990: ☐ Cash ☒ Accrual ☐ Other _____ If the organization changed its method of accounting from a prior year or checked "Other," explain in Schedule O.			
2a	Were the organization's financial statements compiled or reviewed by an independent accountant? If "Yes," check a box below to indicate whether the financial statements for the year were compiled or reviewed on a separate basis, consolidated basis, or both: ☐ Separate basis ☐ Consolidated basis ☐ Both consolidated and separate basis	2a		X
b	Were the organization's financial statements audited by an independent accountant? If "Yes," check a box below to indicate whether the financial statements for the year were audited on a separate basis, consolidated basis, or both: ☐ Separate basis ☐ Consolidated basis ☐ Both consolidated and separate basis	2b	X	
c	If "Yes" to line 2a or 2b, does the organization have a committee that assumes responsibility for oversight of the audit, review, or compilation of its financial statements and selection of an independent accountant? If the organization changed either its oversight process or selection process during the tax year, explain in Schedule O.	2c	X	
3a	As a result of a federal award, was the organization required to undergo an audit or audits as set forth in the Single Audit Act and OMB Circular A-133?	3a		X
b	If "Yes," did the organization undergo the required audit or audits? If the organization did not undergo the required audit or audits, explain why in Schedule O and describe any steps taken to undergo such audits.	3b		

SCHEDULE A
(Form 990 or 990-EZ)

Department of the Treasury
Internal Revenue Service

Public Charity Status and Public Support

Complete if the organization is a section 501(c)(3) organization or a section 4947(a)(1) nonexempt charitable trust.

▶ Attach to Form 990 or Form 990-EZ.

▶ Go to *www.irs.gov/Form990* for instructions and the latest information.

OMB No. 1545-0047

2018

Open to Public Inspection

Name of the organization	Employer identification number
Northern Nevada Building & Construc Trades Council Development Corp	**-***6297

Part I Reason for Public Charity Status (All organizations must complete this part.) See instructions.

The organization is not a private foundation because it is: (For lines 1 through 12, check only one box.)

1 ☐ A church, convention of churches, or association of churches described in **section 170(b)(1)(A)(i).**

2 ☐ A school described in **section 170(b)(1)(A)(ii).** (Attach Schedule E (Form 990 or 990-EZ).)

3 ☐ A hospital or a cooperative hospital service organization described in **section 170(b)(1)(A)(iii).**

4 ☐ A medical research organization operated in conjunction with a hospital described in **section 170(b)(1)(A)(iii).** Enter the hospital's name, city, and state: .....

5 ☐ An organization operated for the benefit of a college or university owned or operated by a governmental unit described in **section 170(b)(1)(A)(iv).** (Complete Part II.)

6 ☐ A federal, state, or local government or governmental unit described in **section 170(b)(1)(A)(v).**

7 ☒ An organization that normally receives a substantial part of its support from a governmental unit or from the general public described in **section 170(b)(1)(A)(vi).** (Complete Part II.)

8 ☐ A community trust described in **section 170(b)(1)(A)(vi).** (Complete Part II.)

9 ☐ An agricultural research organization described in **section 170(b)(1)(A)(ix)** operated in conjunction with a land-grant college or university or a non-land-grant college of agriculture (see instructions). Enter the name, city, and state of the college or university: .....

10 ☐ An organization that normally receives: (1) more than 33 1/3% of its support from contributions, membership fees, and gross receipts from activities related to its exempt functions—subject to certain exceptions, and (2) no more than 33 1/3% of its support from gross investment income and unrelated business taxable income (less section 511 tax) from businesses acquired by the organization after June 30, 1975. See **section 509(a)(2).** (Complete Part III.)

11 ☐ An organization organized and operated exclusively to test for public safety. See **section 509(a)(4).**

12 ☐ An organization organized and operated exclusively for the benefit of, to perform the functions of, or to carry out the purposes of one or more publicly supported organizations described in **section 509(a)(1)** or **section 509(a)(2).** See **section 509(a)(3).** Check the box in lines 12a through 12d that describes the type of supporting organization and complete lines 12e, 12f, and 12g.

a ☐ **Type I.** A supporting organization operated, supervised, or controlled by its supported organization(s), typically by giving the supported organization(s) the power to regularly appoint or elect a majority of the directors or trustees of the supporting organization. **You must complete Part IV, Sections A and B.**

b ☐ **Type II.** A supporting organization supervised or controlled in connection with its supported organization(s), by having control or management of the supporting organization vested in the same persons that control or manage the supported organization(s). **You must complete Part IV, Sections A and C.**

c ☐ **Type III functionally integrated.** A supporting organization operated in connection with, and functionally integrated with, its supported organization(s) (see instructions). **You must complete Part IV, Sections A, D, and E.**

d ☐ **Type III non-functionally integrated.** A supporting organization operated in connection with its supported organization(s) that is not functionally integrated. The organization generally must satisfy a distribution requirement and an attentiveness requirement (see instructions). **You must complete Part IV, Sections A and D, and Part V.**

e ☐ Check this box if the organization received a written determination from the IRS that it is a Type I, Type II, Type III functionally integrated, or Type III non-functionally integrated supporting organization.

f Enter the number of supported organizations .....

g Provide the following information about the supported organization(s).

(i) Name of supported organization	(ii) EIN	(iii) Type of organization (described on lines 1–10 above (see instructions))	(iv) Is the organization listed in your governing document? Yes	(iv) No	(v) Amount of monetary support (see instructions)	(vi) Amount of other support (see instructions)
(A)						
(B)						
(C)						
(D)						
(E)						
Total						

Part II **Support Schedule for Organizations Described in Sections 170(b)(1)(A)(iv) and 170(b)(1)(A)(vi)**
(Complete only if you checked the box on line 5, 7, or 8 of Part I or if the organization failed to qualify under Part III. If the organization fails to qualify under the tests listed below, please complete Part III.)

Section A. Public Support

Calendar year (or fiscal year beginning in) ▶	(a) 2014	(b) 2015	(c) 2016	(d) 2017	(e) 2018	(f) Total
1 Gifts, grants, contributions, and membership fees received. (Do not include any "unusual grants.")	792,079	830,487	820,007	838,440	887,140	4,168,153
2 Tax revenues levied for the organization's benefit and either paid to or expended on its behalf						
3 The value of services or facilities furnished by a governmental unit to the organization without charge						
4 **Total.** Add lines 1 through 3	792,079	830,487	820,007	838,440	887,140	4,168,153
5 The portion of total contributions by each person (other than a governmental unit or publicly supported organization) included on line 1 that exceeds 2% of the amount shown on line 11, column (f)						
6 **Public support.** Subtract line 5 from line 4						4,168,153

Section B. Total Support

Calendar year (or fiscal year beginning in) ▶	(a) 2014	(b) 2015	(c) 2016	(d) 2017	(e) 2018	(f) Total
7 Amounts from line 4	792,079	830,487	820,007	838,440	887,140	4,168,153
8 Gross income from interest, dividends, payments received on securities loans, rents, royalties, and income from similar sources	161	164	170			495
9 Net income from unrelated business activities, whether or not the business is regularly carried on						
10 Other income. Do not include gain or loss from the sale of capital assets (Explain in Part VI.)						
11 **Total support.** Add lines 7 through 10						4,168,648

12 Gross receipts from related activities, etc. (see instructions) 12 681,214

13 **First five years.** If the Form 990 is for the organization's first, second, third, fourth, or fifth tax year as a section 501(c)(3) organization, check this box and **stop here** ▶ ☐

Section C. Computation of Public Support Percentage

14 Public support percentage for 2018 (line 6, column (f) divided by line 11, column (f)) 14 99.99 %

15 Public support percentage from 2017 Schedule A, Part II, line 14 15 99.98 %

16a **33 1/3% support test—2018.** If the organization did not check the box on line 13, and line 14 is 33 1/3% or more, check this box and **stop here.** The organization qualifies as a publicly supported organization ▶ ☒

b **33 1/3% support test—2017.** If the organization did not check a box on line 13 or 16a, and line 15 is 33 1/3% or more, check this box and **stop here.** The organization qualifies as a publicly supported organization ▶ ☐

17a **10%-facts-and-circumstances test—2018.** If the organization did not check a box on line 13, 16a, or 16b, and line 14 is 10% or more, and if the organization meets the "facts-and-circumstances" test, check this box and **stop here.** Explain in Part VI how the organization meets the "facts-and-circumstances" test. The organization qualifies as a publicly supported organization ▶ ☐

b **10%-facts-and-circumstances test—2017.** If the organization did not check a box on line 13, 16a, 16b, or 17a, and line 15 is 10% or more, and if the organization meets the "facts-and-circumstances" test, check this box and **stop here.** Explain in Part VI how the organization meets the "facts-and-circumstances" test. The organization qualifies as a publicly supported organization ▶ ☐

18 **Private foundation.** If the organization did not check a box on line 13, 16a, 16b, 17a, or 17b, check this box and see instructions ▶ ☐

Part III Support Schedule for Organizations Described in Section 509(a)(2)

(Complete only if you checked the box on line 10 of Part I or if the organization failed to qualify under Part II. If the organization fails to qualify under the tests listed below, please complete Part II.)

Section A. Public Support

Calendar year (or fiscal year beginning in) ▶	(a) 2014	(b) 2015	(c) 2016	(d) 2017	(e) 2018	(f) Total
1 Gifts, grants, contributions, and membership fees received. (Do not include any "unusual grants.")						
2 Gross receipts from admissions, merchandise sold or services performed, or facilities furnished in any activity that is related to the organization's tax-exempt purpose						
3 Gross receipts from activities that are not an unrelated trade or business under section 513						
4 Tax revenues levied for the organization's benefit and either paid to or expended on its behalf						
5 The value of services or facilities furnished by a governmental unit to the organization without charge						
6 **Total.** Add lines 1 through 5						
7a Amounts included on lines 1, 2, and 3 received from disqualified persons						
b Amounts included on lines 2 and 3 received from other than disqualified persons that exceed the greater of $5,000 or 1% of the amount on line 13 for the year						
c Add lines 7a and 7b						
8 **Public support.** (Subtract line 7c from line 6.)						

Section B. Total Support

Calendar year (or fiscal year beginning in) ▶	(a) 2014	(b) 2015	(c) 2016	(d) 2017	(e) 2018	(f) Total
9 Amounts from line 6						
10a Gross income from interest, dividends, payments received on securities loans, rents, royalties, and income from similar sources						
b Unrelated business taxable income (less section 511 taxes) from businesses acquired after June 30, 1975						
c Add lines 10a and 10b						
11 Net income from unrelated business activities not included in line 10b, whether or not the business is regularly carried on						
12 Other income. Do not include gain or loss from the sale of capital assets (Explain in Part VI.)						
13 **Total support.** (Add lines 9, 10c, 11, and 12.)						

14 **First five years.** If the Form 990 is for the organization's first, second, third, fourth, or fifth tax year as a section 501(c)(3) organization, check this box and **stop here** ▶ ☐

Section C. Computation of Public Support Percentage

15	Public support percentage for 2018 (line 8, column (f), divided by line 13, column (f))	15	%
16	Public support percentage from 2017 Schedule A, Part III, line 15	16	%

Section D. Computation of Investment Income Percentage

17	Investment income percentage for **2018** (line 10c, column (f), divided by line 13, column (f))	17	%
18	Investment income percentage from **2017** Schedule A, Part III, line 17	18	%

19a **33 1/3% support tests—2018.** If the organization did not check the box on line 14, and line 15 is more than 33 1/3%, and line 17 is not more than 33 1/3%, check this box and **stop here.** The organization qualifies as a publicly supported organization ▶ ☐

b **33 1/3% support tests—2017.** If the organization did not check a box on line 14 or line 19a, and line 16 is more than 33 1/3%, and line 18 is not more than 33 1/3%, check this box and **stop here.** The organization qualifies as a publicly supported organization ▶ ☐

20 **Private foundation.** If the organization did not check a box on line 14, 19a, or 19b, check this box and see instructions ▶ ☐

Part IV Supporting Organizations

(Complete only if you checked a box in line 12 on Part I. If you checked 12a of Part I, complete Sections A and B. If you checked 12b of Part I, complete Sections A and C. If you checked 12c of Part I, complete Sections A, D, and E. If you checked 12d of Part I, complete Sections A and D, and complete Part V.)

Section A. All Supporting Organizations

			Yes	No
1	Are all of the organization's supported organizations listed by name in the organization's governing documents? *If "No," describe in Part VI how the supported organizations are designated. If designated by class or purpose, describe the designation. If historic and continuing relationship, explain.*	1		
2	Did the organization have any supported organization that does not have an IRS determination of status under section 509(a)(1) or (2)? *If "Yes," explain in Part VI how the organization determined that the supported organization was described in section 509(a)(1) or (2).*	2		
3a	Did the organization have a supported organization described in section 501(c)(4), (5), or (6)? *If "Yes," answer (b) and (c) below.*	3a		
b	Did the organization confirm that each supported organization qualified under section 501(c)(4), (5), or (6) and satisfied the public support tests under section 509(a)(2)? *If "Yes," describe in Part VI when and how the organization made the determination.*	3b		
c	Did the organization ensure that all support to such organizations was used exclusively for section 170(c)(2)(B) purposes? *If "Yes," explain in Part VI what controls the organization put in place to ensure such use.*	3c		
4a	Was any supported organization not organized in the United States ("foreign supported organization")? *If "Yes," and if you checked 12a or 12b in Part I, answer (b) and (c) below.*	4a		
b	Did the organization have ultimate control and discretion in deciding whether to make grants to the foreign supported organization? *If "Yes," describe in Part VI how the organization had such control and discretion despite being controlled or supervised by or in connection with its supported organizations.*	4b		
c	Did the organization support any foreign supported organization that does not have an IRS determination under sections 501(c)(3) and 509(a)(1) or (2)? *If "Yes," explain in Part VI what controls the organization used to ensure that all support to the foreign supported organization was used exclusively for section 170(c)(2)(B) purposes.*	4c		
5a	Did the organization add, substitute, or remove any supported organizations during the tax year? *If "Yes," answer (b) and (c) below (if applicable). Also, provide detail in Part VI, including (i) the names and EIN numbers of the supported organizations added, substituted, or removed; (ii) the reasons for each such action; (iii) the authority under the organization's organizing document authorizing such action; and (iv) how the action was accomplished (such as by amendment to the organizing document).*	5a		
b	**Type I or Type II only.** Was any added or substituted supported organization part of a class already designated in the organization's organizing document?	5b		
c	**Substitutions only.** Was the substitution the result of an event beyond the organization's control?	5c		
6	Did the organization provide support (whether in the form of grants or the provision of services or facilities) to anyone other than (i) its supported organizations, (ii) individuals that are part of the charitable class benefited by one or more of its supported organizations, or (iii) other supporting organizations that also support or benefit one or more of the filing organization's supported organizations? *If "Yes," provide detail in Part VI.*	6		
7	Did the organization provide a grant, loan, compensation, or other similar payment to a substantial contributor (as defined in section 4958(c)(3)(C)), a family member of a substantial contributor, or a 35% controlled entity with regard to a substantial contributor? *If "Yes," complete Part I of Schedule L (Form 990 or 990-EZ).*	7		
8	Did the organization make a loan to a disqualified person (as defined in section 4958) not described in line 7? *If "Yes," complete Part I of Schedule L (Form 990 or 990-EZ).*	8		
9a	Was the organization controlled directly or indirectly at any time during the tax year by one or more disqualified persons as defined in section 4946 (other than foundation managers and organizations described in section 509(a)(1) or (2))? *If "Yes," provide detail in Part VI.*	9a		
b	Did one or more disqualified persons (as defined in line 9a) hold a controlling interest in any entity in which the supporting organization had an interest? *If "Yes," provide detail in Part VI.*	9b		
c	Did a disqualified person (as defined in line 9a) have an ownership interest in, or derive any personal benefit from, assets in which the supporting organization also had an interest? *If "Yes," provide detail in Part VI.*	9c		
10a	Was the organization subject to the excess business holdings rules of section 4943 because of section 4943(f) (regarding certain Type II supporting organizations, and all Type III non-functionally integrated supporting organizations)? *If "Yes," answer 10b below.*	10a		
b	Did the organization have any excess business holdings in the tax year? *(Use Schedule C, Form 4720, to determine whether the organization had excess business holdings.)*	10b		

Part IV Supporting Organizations *(continued)*

			Yes	No
11	Has the organization accepted a gift or contribution from any of the following persons?			
a	A person who directly or indirectly controls, either alone or together with persons described in (b) and (c) below, the governing body of a supported organization?	11a		
b	A family member of a person described in (a) above?	11b		
c	A 35% controlled entity of a person described in (a) or (b) above? *If "Yes" to a, b, or c, provide detail in Part VI.*	11c		

Section B. Type I Supporting Organizations

			Yes	No
1	Did the directors, trustees, or membership of one or more supported organizations have the power to regularly appoint or elect at least a majority of the organization's directors or trustees at all times during the tax year? *If "No," describe in Part VI how the supported organization(s) effectively operated, supervised, or controlled the organization's activities. If the organization had more than one supported organization, describe how the powers to appoint and/or remove directors or trustees were allocated among the supported organizations and what conditions or restrictions, if any, applied to such powers during the tax year.*	1		
2	Did the organization operate for the benefit of any supported organization other than the supported organization(s) that operated, supervised, or controlled the supporting organization? *If "Yes," explain in Part VI how providing such benefit carried out the purposes of the supported organization(s) that operated, supervised, or controlled the supporting organization.*	2		

Section C. Type II Supporting Organizations

			Yes	No
1	Were a majority of the organization's directors or trustees during the tax year also a majority of the directors or trustees of each of the organization's supported organization(s)? *If "No," describe in Part VI how control or management of the supporting organization was vested in the same persons that controlled or managed the supported organization(s).*	1		

Section D. All Type III Supporting Organizations

			Yes	No
1	Did the organization provide to each of its supported organizations, by the last day of the fifth month of the organization's tax year, (i) a written notice describing the type and amount of support provided during the prior tax year, (ii) a copy of the Form 990 that was most recently filed as of the date of notification, and (iii) copies of the organization's governing documents in effect on the date of notification, to the extent not previously provided?	1		
2	Were any of the organization's officers, directors, or trustees either (i) appointed or elected by the supported organization(s) or (ii) serving on the governing body of a supported organization? *If "No," explain in Part VI how the organization maintained a close and continuous working relationship with the supported organization(s).*	2		
3	By reason of the relationship described in (2), did the organization's supported organizations have a significant voice in the organization's investment policies and in directing the use of the organization's income or assets at all times during the tax year? *If "Yes," describe in Part VI the role the organization's supported organizations played in this regard.*	3		

Section E. Type III Functionally-Integrated Supporting Organizations

1 *Check the box next to the method that the organization used to satisfy the Integral Part Test during the year (see instructions).*

- a ☐ The organization satisfied the Activities Test. *Complete line 2 below.*
- b ☐ The organization is the parent of each of its supported organizations. *Complete line 3 below.*
- c ☐ The organization supported a governmental entity. *Describe in Part VI how you supported a government entity (see instructions).*

			Yes	No
2	Activities Test. *Answer (a) and (b) below.*			
a	Did substantially all of the organization's activities during the tax year directly further the exempt purposes of the supported organization(s) to which the organization was responsive? *If "Yes," then in Part VI identify those supported organizations and explain how these activities directly furthered their exempt purposes, how the organization was responsive to those supported organizations, and how the organization determined that these activities constituted substantially all of its activities.*	2a		
b	Did the activities described in (a) constitute activities that, but for the organization's involvement, one or more of the organization's supported organization(s) would have been engaged in? *If "Yes," explain in Part VI the reasons for the organization's position that its supported organization(s) would have engaged in these activities but for the organization's involvement.*	2b		
3	Parent of Supported Organizations. *Answer (a) and (b) below.*			
a	Did the organization have the power to regularly appoint or elect a majority of the officers, directors, or trustees of each of the supported organizations? *Provide details in Part VI.*	3a		
b	Did the organization exercise a substantial degree of direction over the policies, programs, and activities of each of its supported organizations? *If "Yes," describe in Part VI the role played by the organization in this regard.*	3b		

Part V Type III Non-Functionally Integrated 509(a)(3) Supporting Organizations

1 ☐ Check here if the organization satisfied the Integral Part Test as a qualifying trust on Nov. 20, 1970 (explain in Part VI). **See instructions.** All other Type III non-functionally integrated supporting organizations must complete Sections A through E.

Section A - Adjusted Net Income		(A) Prior Year	(B) Current Year (optional)
1 Net short-term capital gain	1		
2 Recoveries of prior-year distributions	2		
3 Other gross income (see instructions)	3		
4 Add lines 1 through 3.	4		
5 Depreciation and depletion	5		
6 Portion of operating expenses paid or incurred for production or collection of gross income or for management, conservation, or maintenance of property held for production of income (see instructions)	6		
7 Other expenses (see instructions)	7		
8 **Adjusted Net Income** (subtract lines 5, 6, and 7 from line 4)	8		

Section B - Minimum Asset Amount		(A) Prior Year	(B) Current Year (optional)
1 Aggregate fair market value of all non-exempt-use assets (see instructions for short tax year or assets held for part of year):			
a Average monthly value of securities	1a		
b Average monthly cash balances	1b		
c Fair market value of other non-exempt-use assets	1c		
d **Total** (add lines 1a, 1b, and 1c)	1d		
e **Discount** claimed for blockage or other factors (explain in detail in **Part VI**):			
2 Acquisition indebtedness applicable to non-exempt-use assets	2		
3 Subtract line 2 from line 1d.	3		
4 Cash deemed held for exempt use. Enter 1-1/2% of line 3 (for greater amount, see instructions).	4		
5 Net value of non-exempt-use assets (subtract line 4 from line 3)	5		
6 Multiply line 5 by .035.	6		
7 Recoveries of prior-year distributions	7		
8 **Minimum Asset Amount** (add line 7 to line 6)	8		

Section C - Distributable Amount			Current Year
1 Adjusted net income for prior year (from Section A, line 8, Column A)	1		
2 Enter 85% of line 1.	2		
3 Minimum asset amount for prior year (from Section B, line 8, Column A)	3		
4 Enter greater of line 2 or line 3.	4		
5 Income tax imposed in prior year	5		
6 **Distributable Amount.** Subtract line 5 from line 4, unless subject to emergency temporary reduction (see instructions).	6		

7 ☐ Check here if the current year is the organization's first as a non-functionally integrated Type III supporting organization (see instructions).

Part V Type III Non-Functionally Integrated 509(a)(3) Supporting Organizations *(continued)*

Section D - Distributions		Current Year
1	Amounts paid to supported organizations to accomplish exempt purposes	
2	Amounts paid to perform activity that directly furthers exempt purposes of supported organizations, in excess of income from activity	
3	Administrative expenses paid to accomplish exempt purposes of supported organizations	
4	Amounts paid to acquire exempt-use assets	
5	Qualified set-aside amounts (prior IRS approval required)	
6	Other distributions (describe in **Part VI**). See instructions.	
7	**Total annual distributions.** Add lines 1 through 6.	
8	Distributions to attentive supported organizations to which the organization is responsive (provide details in **Part VI**). See instructions.	
9	Distributable amount for 2018 from Section C, line 6	
10	Line 8 amount divided by line 9 amount	

Section E - Distribution Allocations (see instructions)		(i) Excess Distributions	(ii) Underdistributions Pre-2018	(iii) Distributable Amount for 2018
1	Distributable amount for 2018 from Section C, line 6			
2	Underdistributions, if any, for years prior to 2018 (reasonable cause required-explain in **Part VI**). See instructions.			
3	Excess distributions carryover, if any, to 2018			
a	From 2013			
b	From 2014			
c	From 2015			
d	From 2016			
e	From 2017			
f	**Total** of lines 3a through e			
g	Applied to underdistributions of prior years			
h	Applied to 2018 distributable amount			
i	Carryover from 2013 not applied (see instructions)			
j	Remainder. Subtract lines 3g, 3h, and 3i from 3f.			
4	Distributions for 2018 from Section D, line 7: $			
a	Applied to underdistributions of prior years			
b	Applied to 2018 distributable amount			
c	Remainder. Subtract lines 4a and 4b from 4.			
5	Remaining underdistributions for years prior to 2018, if any. Subtract lines 3g and 4a from line 2. For result greater than zero, explain in **Part VI**. See instructions.			
6	Remaining underdistributions for 2018. Subtract lines 3h and 4b from line 1. For result greater than zero, explain in **Part VI**. See instructions.			
7	**Excess distributions carryover to 2019.** Add lines 3j and 4c.			
8	Breakdown of line 7:			
a	Excess from 2014			
b	Excess from 2015			
c	Excess from 2016			
d	Excess from 2017			
e	Excess from 2018			

Part VI **Supplemental Information.** Provide the explanations required by Part II, line 10; Part II, line 17a or 17b; Part III, line 12; Part IV, Section A, lines 1, 2, 3b, 3c, 4b, 4c, 5a, 6, 9a, 9b, 9c, 11a, 11b, and 11c; Part IV, Section B, lines 1 and 2; Part IV, Section C, line 1; Part IV, Section D, lines 2 and 3; Part IV, Section E, lines 1c, 2a, 2b, 3a, and 3b; Part V, line 1; Part V, Section B, line 1e; Part V, Section D, lines 5, 6, and 8; and Part V, Section E, lines 2, 5, and 6. Also complete this part for any additional information. (See instructions.)

SCHEDULE D (Form 990)

Department of the Treasury
Internal Revenue Service

Supplemental Financial Statements

▶ Complete if the organization answered "Yes" on Form 990, Part IV, line 6, 7, 8, 9, 10, 11a, 11b, 11c, 11d, 11e, 11f, 12a, or 12b.
▶ Attach to Form 990.
▶ Go to *www.irs.gov/Form990* for instructions and the latest information.

OMB No. 1545-0047
2018
Open to Public Inspection

Name of the organization
Northern Nevada Building & Construc Trades Council Development Corp

Employer identification number
-*6297

Part I Organizations Maintaining Donor Advised Funds or Other Similar Funds or Accounts.

Complete if the organization answered "Yes" on Form 990, Part IV, line 6.

	(a) Donor advised funds	(b) Funds and other accounts
1 Total number at end of year		
2 Aggregate value of contributions to (during year)		
3 Aggregate value of grants from (during year)		
4 Aggregate value at end of year		

5 Did the organization inform all donors and donor advisors in writing that the assets held in donor advised funds are the organization's property, subject to the organization's exclusive legal control? ☐ Yes ☐ No

6 Did the organization inform all grantees, donors, and donor advisors in writing that grant funds can be used only for charitable purposes and not for the benefit of the donor or donor advisor, or for any other purpose conferring impermissible private benefit? ☐ Yes ☐ No

Part II Conservation Easements.

Complete if the organization answered "Yes" on Form 990, Part IV, line 7.

1 Purpose(s) of conservation easements held by the organization (check all that apply).
- ☐ Preservation of land for public use (e.g., recreation or education)
- ☐ Protection of natural habitat
- ☐ Preservation of open space
- ☐ Preservation of a historically important land area
- ☐ Preservation of a certified historic structure

2 Complete lines 2a through 2d if the organization held a qualified conservation contribution in the form of a conservation easement on the last day of the tax year.

		Held at the End of the Tax Year
a Total number of conservation easements	2a	
b Total acreage restricted by conservation easements	2b	
c Number of conservation easements on a certified historic structure included in (a)	2c	
d Number of conservation easements included in (c) acquired after 7/25/06, and not on a historic structure listed in the National Register	2d	

3 Number of conservation easements modified, transferred, released, extinguished, or terminated by the organization during the tax year ▶

4 Number of states where property subject to conservation easement is located ▶

5 Does the organization have a written policy regarding the periodic monitoring, inspection, handling of violations, and enforcement of the conservation easements it holds? ☐ Yes ☐ No

6 Staff and volunteer hours devoted to monitoring, inspecting, handling of violations, and enforcing conservation easements during the year ▶

7 Amount of expenses incurred in monitoring, inspecting, handling of violations, and enforcing conservation easements during the year ▶ $

8 Does each conservation easement reported on line 2(d) above satisfy the requirements of section 170(h)(4)(B)(i) and section 170(h)(4)(B)(ii)? ☐ Yes ☐ No

9 In Part XIII, describe how the organization reports conservation easements in its revenue and expense statement, and balance sheet, and include, if applicable, the text of the footnote to the organization's financial statements that describes the organization's accounting for conservation easements.

Part III Organizations Maintaining Collections of Art, Historical Treasures, or Other Similar Assets.

Complete if the organization answered "Yes" on Form 990, Part IV, line 8.

1a If the organization elected, as permitted under SFAS 116 (ASC 958), not to report in its revenue statement and balance sheet works of art, historical treasures, or other similar assets held for public exhibition, education, or research in furtherance of public service, provide, in Part XIII, the text of the footnote to its financial statements that describes these items.

b If the organization elected, as permitted under SFAS 116 (ASC 958), to report in its revenue statement and balance sheet works of art, historical treasures, or other similar assets held for public exhibition, education, or research in furtherance of public service, provide the following amounts relating to these items:
- (i) Revenue included on Form 990, Part VIII, line 1 ▶ $
- (ii) Assets included in Form 990, Part X ▶ $

2 If the organization received or held works of art, historical treasures, or other similar assets for financial gain, provide the following amounts required to be reported under SFAS 116 (ASC 958) relating to these items:

a Revenue included on Form 990, Part VIII, line 1 ▶ $

b Assets included in Form 990, Part X ▶ $

Part III Organizations Maintaining Collections of Art, Historical Treasures, or Other Similar Assets *(continued)*

3 Using the organization's acquisition, accession, and other records, check any of the following that are a significant use of its collection items (check all that apply):

- a ☐ Public exhibition
- b ☐ Scholarly research
- c ☐ Preservation for future generations
- d ☐ Loan or exchange programs
- e ☐ Other

4 Provide a description of the organization's collections and explain how they further the organization's exempt purpose in Part XIII.

5 During the year, did the organization solicit or receive donations of art, historical treasures, or other similar assets to be sold to raise funds rather than to be maintained as part of the organization's collection? ☐ Yes ☐ No

Part IV Escrow and Custodial Arrangements.

Complete if the organization answered "Yes" on Form 990, Part IV, line 9, or reported an amount on Form 990, Part X, line 21.

1a Is the organization an agent, trustee, custodian or other intermediary for contributions or other assets not included on Form 990, Part X? ☐ Yes ☐ No

b If "Yes," explain the arrangement in Part XIII and complete the following table:

		Amount
c Beginning balance	1c	
d Additions during the year	1d	
e Distributions during the year	1e	
f Ending balance	1f	

2a Did the organization include an amount on Form 990, Part X, line 21, for escrow or custodial account liability? ☐ Yes ☐ No

b If "Yes," explain the arrangement in Part XIII. Check here if the explanation has been provided on Part XIII ☐

Part V Endowment Funds.

Complete if the organization answered "Yes" on Form 990, Part IV, line 10.

	(a) Current year	(b) Prior year	(c) Two years back	(d) Three years back	(e) Four years back
1a Beginning of year balance					
b Contributions					
c Net investment earnings, gains, and losses					
d Grants or scholarships					
e Other expenditures for facilities and programs					
f Administrative expenses					
g End of year balance					

2 Provide the estimated percentage of the current year end balance (line 1g, column (a)) held as:

- a Board designated or quasi-endowment ▶ ____ %
- b Permanent endowment ▶ ____ %
- c Temporarily restricted endowment ▶ ____ %

The percentages on lines 2a, 2b, and 2c should equal 100%.

3a Are there endowment funds not in the possession of the organization that are held and administered for the organization by:

		Yes	No
(i) unrelated organizations	3a(i)		
(ii) related organizations	3a(ii)		
b If "Yes" on line 3a(ii), are the related organizations listed as required on Schedule R?	3b		

4 Describe in Part XIII the intended uses of the organization's endowment funds.

Part VI Land, Buildings, and Equipment.

Complete if the organization answered "Yes" on Form 990, Part IV, line 11a. See Form 990, Part X, line 10.

Description of property	(a) Cost or other basis (investment)	(b) Cost or other basis (other)	(c) Accumulated depreciation	(d) Book value
1a Land		252,019		252,019
b Buildings		3,000,704	2,728,720	271,984
c Leasehold improvements				
d Equipment		90,570	79,830	10,740
e Other		1,204,504	818,657	385,847
Total. Add lines 1a through 1e. *(Column (d) must equal Form 990, Part X, column (B), line 10c.)* ▶				920,590

Part VII Investments—Other Securities.

Complete if the organization answered "Yes" on Form 990, Part IV, line 11b. See Form 990, Part X, line 12.

(a) Description of security or category (including name of security)	(b) Book value	(c) Method of valuation: Cost or end-of-year market value
(1) Financial derivatives		
(2) Closely-held equity interests		
(3) Other		
(A)		
(B)		
(C)		
(D)		
(E)		
(F)		
(G)		
(H)		
Total. *(Column (b) must equal Form 990, Part X, col. (B) line 12.)* ▶		

Part VIII Investments—Program Related.

Complete if the organization answered "Yes" on Form 990, Part IV, line 11c. See Form 990, Part X, line 13.

(a) Description of investment	(b) Book value	(c) Method of valuation: Cost or end-of-year market value
(1)		
(2)		
(3)		
(4)		
(5)		
(6)		
(7)		
(8)		
(9)		
Total. *(Column (b) must equal Form 990, Part X, col. (B) line 13.)* ▶		

Part IX Other Assets.

Complete if the organization answered "Yes" on Form 990, Part IV, line 11d. See Form 990, Part X, line 15.

(a) Description	(b) Book value
(1)	
(2)	
(3)	
(4)	
(5)	
(6)	
(7)	
(8)	
(9)	
Total. *(Column (b) must equal Form 990, Part X, col. (B) line 15.)* ▶	

Part X Other Liabilities.

Complete if the organization answered "Yes" on Form 990, Part IV, line 11e or 11f. See Form 990, Part X, line 25.

1. (a) Description of liability	(b) Book value
(1) Federal income taxes	
(2) TENANT SECURITY DEPOSITS	27,147
(3) REFUNDABLE PET DEPOSITS	245
(4)	
(5)	
(6)	
(7)	
(8)	
(9)	
Total. *(Column (b) must equal Form 990, Part X, col. (B) line 25.)* ▶	27,392

2. Liability for uncertain tax positions. In Part XIII, provide the text of the footnote to the organization's financial statements that reports the organization's liability for uncertain tax positions under FIN 48 (ASC 740). Check here if the text of the footnote has been provided in Part XIII ☐

Part XI Reconciliation of Revenue per Audited Financial Statements With Revenue per Return.
Complete if the organization answered "Yes" on Form 990, Part IV, line 12a.

1	Total revenue, gains, and other support per audited financial statements			1	1,263,415
2	Amounts included on line 1 but not on Form 990, Part VIII, line 12:				
a	Net unrealized gains (losses) on investments	2a			
b	Donated services and use of facilities	2b			
c	Recoveries of prior year grants	2c			
d	Other (Describe in Part XIII.)	2d			
e	Add lines 2a through 2d			2e	
3	Subtract line 2e from line 1			3	1,263,415
4	Amounts included on Form 990, Part VIII, line 12, but not on line 1:				
a	Investment expenses not included on Form 990, Part VIII, line 7b	4a			
b	Other (Describe in Part XIII.)	4b			
c	Add lines 4a and 4b			4c	
5	Total revenue. Add lines 3 and 4c. *(This must equal Form 990, Part I, line 12.)*			5	1,263,415

Part XII Reconciliation of Expenses per Audited Financial Statements With Expenses per Return.
Complete if the organization answered "Yes" on Form 990, Part IV, line 12a.

1	Total expenses and losses per audited financial statements			1	1,258,453
2	Amounts included on line 1 but not on Form 990, Part IX, line 25:				
a	Donated services and use of facilities	2a			
b	Prior year adjustments	2b			
c	Other losses	2c			
d	Other (Describe in Part XIII.)	2d	1		
e	Add lines 2a through 2d			2e	1
3	Subtract line 2e from line 1			3	1,258,452
4	Amounts included on Form 990, Part IX, line 25, but not on line 1:				
a	Investment expenses not included on Form 990, Part VIII, line 7b	4a			
b	Other (Describe in Part XIII.)	4b			
c	Add lines 4a and 4b			4c	
5	Total expenses. Add lines 3 and 4c. *(This must equal Form 990, Part I, line 18.)*			5	1,258,452

Part XIII Supplemental Information.

Provide the descriptions required for Part II, lines 3, 5, and 9; Part III, lines 1a and 4; Part IV, lines 1b and 2b; Part V, line 4; Part X, line 2; Part XI, lines 2d and 4b; and Part XII, lines 2d and 4b. Also complete this part to provide any additional information.

Part XII, Line 2d - Expense Amounts Included in Financials - Other

Book / Tax Depreciation Difference	$ 1

DAA

Part XIII Supplemental Information *(continued)*

SCHEDULE L
(Form 990 or 990-EZ)
Department of the Treasury
Internal Revenue Service

Transactions With Interested Persons

▶ Complete if the organization answered "Yes" on Form 990, Part IV, line 25a, 25b, 26, 27, 28a, 28b, or 28c, or Form 990-EZ, Part V, line 38a or 40b.
▶ Attach to Form 990 or Form 990-EZ.
▶ Go to *www.irs.gov/Form990* for instructions and the latest information.

OMB No. 1545-0047
2018
Open To Public Inspection

Name of the organization: Northern Nevada Building & Construc Trades Council Development Corp

Employer identification number: **-***6297

Part I Excess Benefit Transactions (section 501(c)(3), section 501(c)(4), and 501(c)(29) organizations only).

Complete if the organization answered "Yes" on Form 990, Part IV, line 25a or 25b, or Form 990-EZ, Part V, line 40b.

1	(a) Name of disqualified person	(b) Relationship between disqualified person and organization	(c) Description of transaction	(d) Corrected? Yes	(d) Corrected? No
(1)					
(2)					
(3)					
(4)					
(5)					
(6)					

2 Enter the amount of tax incurred by the organization managers or disqualified persons during the year under section 4958 ▶ $

3 Enter the amount of tax, if any, on line 2, above, reimbursed by the organization ▶ $

Part II Loans to and/or From Interested Persons.

Complete if the organization answered "Yes" on Form 990-EZ, Part V, line 38a or Form 990, Part IV, line 26; or if the organization reported an amount on Form 990, Part X, line 5, 6, or 22.

	(a) Name of interested person	(b) Relationship with organization	(c) Purpose of loan	(d) Loan to or from the org.? To	(d) Loan to or from the org.? From	(e) Original principal amount	(f) Balance due	(g) In default? Yes	(g) In default? No	(h) Approved by board or committee? Yes	(h) Approved by board or committee? No	(i) Written agreement? Yes	(i) Written agreement? No
(1)													
(2)													
(3)													
(4)													
(5)													
(6)													
(7)													
(8)													
(9)													
(10)													
Total						▶ $							

Part III Grants or Assistance Benefiting Interested Persons.

Complete if the organization answered "Yes" on Form 990, Part IV, line 27.

	(a) Name of interested person	(b) Relationship between interested person and the organization	(c) Amount of assistance	(d) Type of assistance	(e) Purpose of assistance
(1)					
(2)					
(3)					
(4)					
(5)					
(6)					
(7)					
(8)					
(9)					
(10)					

Part IV Business Transactions Involving Interested Persons.

Complete if the organization answered "Yes" on Form 990, Part IV, line 28a, 28b, or 28c.

	(a) Name of interested person	(b) Relationship between interested person and the organization	(c) Amount of transaction	(d) Description of transaction	(e) Sharing of org. revenues? Yes	(e) Sharing of org. revenues? No
(1)	Building & Construction Trades	Managing Agent				X
(2)	Council of Northern Nevada	& Owner		Management Fees		X
(3)						
(4)						
(5)						
(6)						
(7)						
(8)						
(9)						
(10)						

Part V Supplemental Information

Provide additional information for responses to questions on Schedule L (see instructions).

SCHEDULE O
(Form 990 or 990-EZ)

Department of the Treasury
Internal Revenue Service

Supplemental Information to Form 990 or 990-EZ

Complete to provide information for responses to specific questions on Form 990 or 990-EZ or to provide any additional information.

▶ Attach to Form 990 or 990-EZ.

▶ Go to *www.irs.gov/Form990* for the latest information.

OMB No. 1545-0047

2018

Open to Public Inspection

Name of the organization: Northern Nevada Building & Construc Trades Council Development Corp

Employer identification number: **-***6297

Form 990, Part I, Line 6

All of the board members are volunteers and there are no benefits provided.

Form 990, Part VI, Line 11b - Organization's Process to Review Form 990

990 is compared to the annual audit

Form 990, Part VI, Line 15b - Compensation Process for Officers

All compensation decisions are taken before the board and an agreement is reached among the members.

Form 990, Part VI, Line 19 - Governing Documents Disclosure Explanation

Upon Request

Form 990, Part XI, Line 9 - Other Changes in Net Assets Explanation

Book / Tax Depreciation Difference $ -1

Form **4562**

Department of the Treasury
Internal Revenue Service (99)

Depreciation and Amortization
(Including Information on Listed Property)

▶ Attach to your tax return.

▶ Go to *www.irs.gov/Form4562* for instructions and the latest information.

OMB No. 1545-0172

2018

Attachment Sequence No. **179**

Name(s) shown on return: Northern Nevada Building & Construc Trades Council Development Corp

Identifying number: **-***6297

Business or activity to which this form relates: Indirect Depreciation

Part I Election To Expense Certain Property Under Section 179

Note: If you have any listed property, complete Part V before you complete Part I.

1	Maximum amount (see instructions)	1	1,000,000
2	Total cost of section 179 property placed in service (see instructions)	2	
3	Threshold cost of section 179 property before reduction in limitation (see instructions)	3	2,500,000
4	Reduction in limitation. Subtract line 3 from line 2. If zero or less, enter -0-	4	
5	Dollar limitation for tax year. Subtract line 4 from line 1. If zero or less, enter -0-. If married filing separately, see instructions	5	

6	(a) Description of property	(b) Cost (business use only)	(c) Elected cost

7	Listed property. Enter the amount from line 29	7	
8	Total elected cost of section 179 property. Add amounts in column (c), lines 6 and 7	8	
9	Tentative deduction. Enter the **smaller** of line 5 or line 8	9	
10	Carryover of disallowed deduction from line 13 of your 2017 Form 4562	10	
11	Business income limitation. Enter the smaller of business income (not less than zero) or line 5. See instructions	11	
12	Section 179 expense deduction. Add lines 9 and 10, but don't enter more than line 11	12	
13	Carryover of disallowed deduction to 2019. Add lines 9 and 10, less line 12 ▶	13	

Note: Don't use Part II or Part III below for listed property. Instead, use Part V.

Part II Special Depreciation Allowance and Other Depreciation (Don't include listed property. See instructions.)

14	Special depreciation allowance for qualified property (other than listed property) placed in service during the tax year. See instructions	14	
15	Property subject to section 168(f)(1) election	15	
16	Other depreciation (including ACRS)	16	113,568

Part III MACRS Depreciation (Don't include listed property. See instructions.)

Section A

17	MACRS deductions for assets placed in service in tax years beginning before 2018	17	5,179
18	If you are electing to group any assets placed in service during the tax year into one or more general asset accounts, check here ▶ ☐		

Section B—Assets Placed in Service During 2018 Tax Year Using the General Depreciation System

	(a) Classification of property	(b) Month and year placed in service	(c) Basis for depreciation (business/investment use only–see instructions)	(d) Recovery period	(e) Convention	(f) Method	(g) Depreciation deduction
19a	3-year property						
b	5-year property						
c	7-year property						
d	10-year property						
e	15-year property						
f	20-year property						
g	25-year property			25 yrs.		S/L	
h	Residential rental property			27.5 yrs.	MM	S/L	
				27.5 yrs.	MM	S/L	
i	Nonresidential real property			39 yrs.	MM	S/L	
					MM	S/L	

Section C—Assets Placed in Service During 2018 Tax Year Using the Alternative Depreciation System

20a	Class life					S/L	
b	12-year			12 yrs.		S/L	
c	30-year			30 yrs.	MM	S/L	
d	40-year			40 yrs.	MM	S/L	

Part IV Summary (See instructions.)

21	Listed property. Enter amount from line 28	21	
22	**Total.** Add amounts from line 12, lines 14 through 17, lines 19 and 20 in column (g), and line 21. Enter here and on the appropriate lines of your return. Partnerships and S corporations—see instructions	22	118,747
23	For assets shown above and placed in service during the current year, enter the portion of the basis attributable to section 263A costs	23	

For Paperwork Reduction Act Notice, see separate instructions.

DAA

There are no amounts for Page 2

Form **4562** (2018)

Federal Asset Report

Form 990, Page 1

Asset	Description	Date In Service	Cost	Bus %	Sec 179 Bonus	Basis for Depr	Per	Conv	Meth	Prior	Current
Prior MACRS:											
132	Sewer Line Replacement	10/31/15	142,432			142,432	27	MM	S/L	12,733	5,179
			142,432			142,432				12,733	5,179
Other Depreciation:											
1	Fully Depreciated Improvements	1/01/80	195,270			195,270	15	MO	S/L	195,270	0
2	Earthwork	5/01/80	68,414			68,414	40	MO	S/L	64,841	1,711
3	Site Improvements	5/01/80	10,210			10,210	40	MO	S/L	9,671	256
4	Trees	10/01/87	2,045			2,045	18	MO	S/L	2,045	0
5	Speed Bumps	10/10/89	1,120			1,120	15	MO	S/L	1,120	0
6	Concrete	8/09/91	4,436			4,436	15	MO	S/L	4,436	0
7	Concrete	8/21/95	29,650			29,650	15	MO	S/L	29,650	0
9	Walkways	7/29/99	6,168			6,168	15	MO	S/L	6,168	0
10	Walkways	2/28/01	11,965			11,965	15	MO	S/L	11,965	0
11	Walkways & Ramps	10/01/01	12,339			12,339	15	MO	S/L	12,339	0
13	Walkways	10/01/02	6,770			6,770	15	MO	S/L	6,770	0
14	Landscaping	10/01/02	5,269			5,269	15	MO	S/L	5,269	0
15	Fencing	8/05/02	1,458			1,458	15	MO	S/L	1,458	0
16	Walkways	8/15/03	7,658			7,658	15	MO	S/L	7,489	169
18	Walkways	9/01/05	17,204			17,204	15	MO	S/L	14,336	1,147
20	Walkways	8/01/06	4,419			4,419	15	MO	S/L	3,437	295
21	Walkways	7/01/07	12,917			12,917	15	MO	S/L	9,185	861
22	Walkways	3/01/08	4,665			4,665	15	MO	S/L	3,110	311
23	Fully Depreciated Buildings	1/01/80	6,465			6,465	15	MO	S/L	6,465	0
24	Buildings	5/01/80	1,677,085			1,677,085	40	MO	S/L	1,589,731	41,927
25	Constr. Period Int.	5/01/80	103,655			103,655	40	MO	S/L	98,246	2,591
26	Roofing	12/02/91	7,565			7,565	15	MO	S/L	7,565	0
27	Roofing	3/01/95	30,560			30,560	15	MO	S/L	30,560	0
28	Handicap Ramps	12/01/94	8,816			8,816	15	MO	S/L	8,816	0
29	Plumbing	12/01/94	14,447			14,447	15	MO	S/L	14,447	0
30	Roofing	3/31/95	27,000			27,000	15	MO	S/L	27,000	0
31	Building Repair	3/31/95	2,150			2,150	15	MO	S/L	2,150	0
32	Concrete Steps	3/13/98	679			679	15	MO	S/L	679	0
33	Handicap Ramps	7/29/99	6,070			6,070	15	MO	S/L	6,070	0
34	Handicap Railings	9/01/99	1,700			1,700	15	MO	S/L	1,700	0
35	Handicap Ramps	2/28/01	6,131			6,131	15	MO	S/L	6,131	0
36	Handicap Ramps & Patio	11/01/01	8,766			8,766	15	MO	S/L	8,766	0
37	Handicap Railings	4/09/01	1,526			1,526	15	MO	S/L	1,526	0
38	Balcony Repair	11/01/01	8,300			8,300	15	MO	S/L	8,300	0
39	Tile	7/15/01	4,450			4,450	15	MO	S/L	4,450	0
40	Signs	10/01/01	3,417			3,417	15	MO	S/L	3,417	0
41	Paint Exterior	11/01/01	110,994			110,994	15	MO	S/L	110,994	0
42	Shower Tub	6/06/01	1,450			1,450	15	MO	S/L	1,450	0
43	Tile	2/01/04	6,723			6,723	15	MO	S/L	6,349	374
44	Trim	10/01/03	17,780			17,780	15	MO	S/L	17,186	594
45	Concrete Steps	3/07/05	1,619			1,619	15	MO	S/L	1,413	107
46	Tile	3/01/05	2,669			2,669	15	MO	S/L	2,328	178
47	Paint Trim	8/28/06	24,699			24,699	15	MO	S/L	19,074	1,647
48	Concrete Steps	7/09/07	2,283			2,283	15	MO	S/L	1,649	153
49	Fully Depreciated Buildings Equipment Fix	1/01/80	414,971			414,971	5	MO	S/L	414,971	0
50	Rec. Bldg	6/04/99	3,650			3,650	5	MO	S/L	3,650	0
51	Hot Water Heater	12/21/01	2,560			2,560	5	MO	S/L	2,560	0
52	Lights	7/23/02	2,748			2,748	5	MO	S/L	2,748	0
53	Water Heaters	6/18/03	2,182			2,182	5	MO	S/L	2,182	0
54	Pump	3/04/04	772			772	5	MO	S/L	772	0
62	Appliances	10/01/04	35,781			35,781	5	MO	S/L	35,781	0
63	Appliances	10/01/05	32,070			32,070	5	MO	S/L	32,070	0
64	Appliances	10/01/06	26,630			26,630	5	MO	S/L	26,630	0
65	Appliances	10/01/07	19,763			19,763	5	MO	S/L	19,763	0
66	Appliances	10/01/07	6,148			6,148	5	MO	S/L	6,148	0
68	Filing Cabinets	3/14/01	834			834	7	MO	S/L	834	0
69	Upholstry Chairs	3/28/01	2,074			2,074	7	MO	S/L	2,074	0
80	Carpet	10/01/04	30,889			30,889	5	MO	S/L	30,889	0
81	Furniture	2/01/05	5,354			5,354	5	MO	S/L	5,354	0
82	Flooring	10/01/05	42,799			42,799	5	MO	S/L	42,799	0
83	Furniture (C/A)	10/01/05	16,650			16,650	5	MO	S/L	16,650	0
84	Flooring	10/01/06	32,750			32,750	5	MO	S/L	32,750	0
85	Flooring	10/01/07	17,347			17,347	5	MO	S/L	17,347	0

Federal Asset Report

Form 990, Page 1

Asset	Description	Date In Service	Cost	Bus %	Sec 179	Bonus	Basis for Depr	Per	Conv	Meth	Prior	Current
86	Flooring	10/01/07	5,270				5,270	5	MO	S/L	5,270	0
88	Shed	12/12/00	1,552				1,552	5	MO	S/L	1,552	0
89	Billy Goat	8/30/01	1,137				1,137	5	MO	S/L	1,137	0
90	Mule	1/23/03	11,256				11,256	5	MO	S/L	11,256	0
91	Shed	12/06/02	1,669				1,669	5	MO	S/L	1,669	0
92	Shed	1/03/03	822				822	5	MO	S/L	822	0
93	Floor Machine	6/17/04	2,708				2,708	5	MO	S/L	2,708	0
94	Land	5/01/80	252,019				252,019	0	--	Land	0	0
95	Chairs, Lamps, Coffee Sets	8/25/09	696				696	5	MO	S/L	696	0
96	Charis & Lamps	11/19/09	421				421	5	MO	S/L	421	0
97	Coffee Tables, End Tables, Lamps & Side C	2/17/10	1,203				1,203	5	MO	S/L	1,203	0
98	Yardi System	4/03/09	3,900				3,900	5	MO	S/L	3,900	0
	Sold/Scrapped: 4/01/18											
99	Muratec Copier	4/14/09	5,363				5,363	5	MO	S/L	5,363	0
100	Dell Computer	4/29/09	737				737	5	MO	S/L	737	0
101	File Cabinet	8/12/09	623				623	7	MO	S/L	623	0
102	Snow Blower	11/18/09	645				645	5	MO	S/L	645	0
103	Rails	7/28/10	6,156				6,156	15	MO	S/L	3,146	411
104	Handicap Ramp	7/28/10	3,217				3,217	15	MO	S/L	1,644	215
105	Curbs	8/16/10	5,813				5,813	15	MO	S/L	2,939	387
106	Sofa and Loveseat	11/27/10	899				899	5	MO	S/L	899	0
107	Security Cameras	3/29/11	36,291				36,291	5	MO	S/L	36,291	0
108	Trailor	8/06/10	5,963				5,963	5	MO	S/L	5,963	0
109	New Curbs	1/28/12	1,291				1,291	15	MO	S/L	531	86
110	Parking Lot Improvements	9/12/11	484,550				484,550	15	MO	S/L	212,664	32,303
111	Furniture	6/21/11	538				538	7	MO	S/L	518	20
112	Sofa	7/26/11	966				966	7	MO	S/L	920	46
113	Sofa	8/17/11	538				538	7	MO	S/L	506	32
114	Tables and Chairs	10/26/11	405				405	7	MO	S/L	371	34
115	Chairs	3/02/12	207				207	7	MO	S/L	180	27
116	DVD Upgrade	5/27/11	568				568	5	MO	S/L	568	0
117	File Cabinet	3/12/12	590				590	7	MO	S/L	513	77
118	Dell Computer	3/27/12	1,995				1,995	5	MO	S/L	1,995	0
119	Pressure Washer	6/29/11	512				512	5	MO	S/L	512	0
120	Steps	4/11/12	20,322				20,322	15	MO	S/L	8,129	1,355
121	Steps	10/24/12	307				307	15	MO	S/L	111	20
123	Parking Lot Improvements	5/21/12	11,500				11,500	15	MO	S/L	4,472	767
124	Vacuum	7/30/12	393				393	5	MO	S/L	393	0
125	Quickbooks	8/04/12	2,888				2,888	5	MO	S/L	2,888	0
126	Cab Kit	9/09/12	2,783				2,783	5	MO	S/L	2,783	0
127	Tires	9/09/12	558				558	5	MO	S/L	558	0
129	Roofing	1/21/13	294,873				294,873	15	MO	S/L	101,567	19,659
130	Yardi	3/05/13	3,379				3,379	5	MO	S/L	3,379	0
	Sold/Scrapped: 4/01/18											
131	Love Seat, Sofa and 6 Kitchen Chairs	6/09/14	1,240				1,240	7	MO	S/L	679	177
133	Sofa, Love Seat & Chairs	4/27/16	1,174				1,174	7	MO	S/L	322	167
134	Water Heater	4/13/16	2,229				2,229	5	MO	S/L	892	445
135	Water Heater - Laundry	6/02/16	4,553				4,553	5	MO	S/L	1,669	911
136	Interior/Exterior Repairs	8/04/17	30,644				30,644	15	MO	S/L	1,362	2,043
137	Water Heater Bldng 7	1/05/18	7,838				7,838	5	MO	S/L	392	1,567
138	Phone System ESI 50	4/06/18	2,495				2,495	5	MO	S/L	0	499
	Total Other Depreciation		4,412,644				4,412,644				3,508,751	113,569
	Total ACRS and Other Depreciation		4,412,644				4,412,644				3,508,751	113,569
	Grand Totals		4,555,076				4,555,076				3,521,484	118,748
	Less: Dispositions and Transfers		7,279				7,279				7,279	0
	Less: Start-up/Org Expense		0				0				0	0
	Net Grand Totals		4,547,797				4,547,797				3,514,205	118,748

AMT Asset Report

Form 990, Page 1

Asset	Description	Date In Service	Cost	Bus %	Sec 179 Bonus	Basis for Depr	Per	Conv	Meth	Prior	Current
Prior MACRS:											
132	Sewer Line Replacement	10/31/15	142,432			142,432	27	MM	S/L	12,733	5,179
			142,432			142,432				12,733	5,179
Other Depreciation:											
1	Fully Depreciated Improvements	1/01/80	195,270			195,270	15	MO	S/L	195,270	0
2	Earthwork	5/01/80	68,414			68,414	40	MO	S/L	64,841	1,711
3	Site Improvements	5/01/80	10,210			10,210	40	MO	S/L	9,671	256
4	Trees	10/01/87	2,045			2,045	18	MO	S/L	2,045	0
5	Speed Bumps	10/10/89	1,120			1,120	15	MO	S/L	1,120	0
6	Concrete	8/09/91	4,436			4,436	15	MO	S/L	4,436	0
7	Concrete	8/21/95	29,650			29,650	15	MO	S/L	29,650	0
9	Walkways	7/29/99	6,168			6,168	15	MO	S/L	6,168	0
10	Walkways	2/28/01	11,965			11,965	15	MO	S/L	11,965	0
11	Walkways & Ramps	10/01/01	12,339			12,339	15	MO	S/L	12,339	0
13	Walkways	10/01/02	6,770			6,770	15	MO	S/L	6,770	0
14	Landscaping	10/01/02	5,269			5,269	15	MO	S/L	5,269	0
15	Fencing	8/05/02	1,458			1,458	15	MO	S/L	1,458	0
16	Walkways	8/15/03	7,658			7,658	15	MO	S/L	7,489	169
18	Walkways	9/01/05	17,204			17,204	15	MO	S/L	14,336	1,147
20	Walkways	8/01/06	4,419			4,419	15	MO	S/L	3,437	295
21	Walkways	7/01/07	12,917			12,917	15	MO	S/L	9,185	861
22	Walkways	3/01/08	4,665			4,665	15	MO	S/L	3,110	311
23	Fully Depreciated Buildings	1/01/80	6,465			6,465	15	MO	S/L	6,465	0
24	Buildings	5/01/80	1,677,085			1,677,085	40	MO	S/L	1,589,731	41,927
25	Constr. Period Int.	5/01/80	103,655			103,655	40	MO	S/L	98,246	2,591
26	Roofing	12/02/91	7,565			7,565	15	MO	S/L	7,565	0
27	Roofing	3/01/95	30,560			30,560	15	MO	S/L	30,560	0
28	Handicap Ramps	12/01/94	8,816			8,816	15	MO	S/L	8,816	0
29	Plumbing	12/01/94	14,447			14,447	15	MO	S/L	14,447	0
30	Roofing	3/31/95	27,000			27,000	15	MO	S/L	27,000	0
31	Building Repair	3/31/95	2,150			2,150	15	MO	S/L	2,150	0
32	Concrete Steps	3/13/98	679			679	15	MO	S/L	679	0
33	Handicap Ramps	7/29/99	6,070			6,070	15	MO	S/L	6,070	0
34	Handicap Railings	9/01/99	1,700			1,700	15	MO	S/L	1,700	0
35	Handicap Ramps	2/28/01	6,131			6,131	15	MO	S/L	6,131	0
36	Handicap Ramps & Patio	11/01/01	8,766			8,766	15	MO	S/L	8,766	0
37	Handicap Railings	4/09/01	1,526			1,526	15	MO	S/L	1,526	0
38	Balcony Repair	11/01/01	8,300			8,300	15	MO	S/L	8,300	0
39	Tile	7/15/01	4,450			4,450	15	MO	S/L	4,450	0
40	Signs	10/01/01	3,417			3,417	15	MO	S/L	3,417	0
41	Paint Exterior	11/01/01	110,994			110,994	15	MO	S/L	110,994	0
42	Shower Tub	6/06/01	1,450			1,450	15	MO	S/L	1,450	0
43	Tile	2/01/04	6,723			6,723	15	MO	S/L	6,349	374
44	Trim	10/01/03	17,780			17,780	15	MO	S/L	17,186	594
45	Concrete Steps	3/07/05	1,619			1,619	15	MO	S/L	1,413	107
46	Tile	3/01/05	2,669			2,669	15	MO	S/L	2,328	178
47	Paint Trim	8/28/06	24,699			24,699	15	MO	S/L	19,074	1,647
48	Concrete Steps	7/09/07	2,283			2,283	15	MO	S/L	1,649	153
49	Fully Depreciated Buildings Equipment Fix	1/01/80	414,971			414,971	5	MO	S/L	414,971	0
50	Rec. Bldg	6/04/99	3,650			3,650	5	MO	S/L	3,650	0
51	Hot Water Heater	12/21/01	2,560			2,560	5	MO	S/L	2,560	0
52	Lights	7/23/02	2,748			2,748	5	MO	S/L	2,748	0
53	Water Heaters	6/18/03	2,182			2,182	5	MO	S/L	2,182	0
54	Pump	3/04/04	772			772	5	MO	S/L	772	0
62	Appliances	10/01/04	35,781			35,781	5	MO	S/L	35,781	0
63	Appliances	10/01/05	32,070			32,070	5	MO	S/L	32,070	0
64	Appliances	10/01/06	26,630			26,630	5	MO	S/L	26,630	0
65	Appliances	10/01/07	19,763			19,763	5	MO	S/L	19,763	0
66	Appliances	10/01/07	6,148			6,148	5	MO	S/L	6,148	0
68	Filing Cabinets	3/14/01	834			834	7	MO	S/L	834	0
69	Upholstry Chairs	3/28/01	2,074			2,074	7	MO	S/L	2,074	0
80	Carpet	10/01/04	30,889			30,889	5	MO	S/L	30,889	0
81	Furniture	2/01/05	5,354			5,354	5	MO	S/L	5,354	0
82	Flooring	10/01/05	42,799			42,799	5	MO	S/L	42,799	0
83	Furniture (C/A)	10/01/05	16,650			16,650	5	MO	S/L	16,650	0
84	Flooring	10/01/06	32,750			32,750	5	MO	S/L	32,750	0
85	Flooring	10/01/07	17,347			17,347	5	MO	S/L	17,347	0

AMT Asset Report
Form 990, Page 1

Asset	Description	Date In Service	Cost	Bus %	Sec 179	Bonus	Basis for Depr	Per	Conv	Meth	Prior	Current
86	Flooring	10/01/07	5,270				5,270	5	MO	S/L	5,270	0
88	Shed	12/12/00	1,552				1,552	5	MO	S/L	1,552	0
89	Billy Goat	8/30/01	1,137				1,137	5	MO	S/L	1,137	0
90	Mule	1/23/03	11,256				11,256	5	MO	S/L	11,256	0
91	Shed	12/06/02	1,669				1,669	5	MO	S/L	1,669	0
92	Shed	1/03/03	822				822	5	MO	S/L	822	0
93	Floor Machine	6/17/04	2,708				2,708	5	MO	S/L	2,708	0
94	Land	5/01/80	252,019				252,019	0	--	Land	0	0
95	Chairs, Lamps, Coffee Sets	8/25/09	0				0	0	HY		0	0
96	Charis & Lamps	11/19/09	0				0	0	HY		0	0
97	Coffee Tables, End Tables, Lamps & Side (	2/17/10	0				0	0	HY		0	0
98	Yardi System	4/03/09	0				0	0	HY		0	0
	Sold/Scrapped: 4/01/18											
99	Muratec Copier	4/14/09	0				0	0	HY		0	0
100	Dell Computer	4/29/09	0				0	0	HY		0	0
101	File Cabinet	8/12/09	0				0	0	HY		0	0
102	Snow Blower	11/18/09	0				0	0	HY		0	0
103	Rails	7/28/10	6,156				6,156	15	MO	S/L	3,146	411
104	Handicap Ramp	7/28/10	3,217				3,217	15	MO	S/L	1,644	215
105	Curbs	8/16/10	5,813				5,813	15	MO	S/L	2,939	387
106	Sofa and Loveseat	11/27/10	899				899	5	MO	S/L	899	0
107	Security Cameras	3/29/11	36,291				36,291	5	MO	S/L	36,291	0
108	Trailor	8/06/10	5,963				5,963	5	MO	S/L	5,963	0
109	New Curbs	1/28/12	1,291				1,291	15	MO	S/L	531	86
110	Parking Lot Improvements	9/12/11	484,550				484,550	15	MO	S/L	212,664	32,303
111	Furniture	6/21/11	538				538	7	MO	S/L	518	20
112	Sofa	7/26/11	966				966	7	MO	S/L	920	46
113	Sofa	8/17/11	538				538	7	MO	S/L	506	32
114	Tables and Chairs	10/26/11	405				405	7	MO	S/L	371	34
115	Chairs	3/02/12	207				207	7	MO	S/L	180	27
116	DVD Upgrade	5/27/11	568				568	5	MO	S/L	568	0
117	File Cabinet	3/12/12	590				590	7	MO	S/L	513	77
118	Dell Computer	3/27/12	1,995				1,995	5	MO	S/L	1,995	0
119	Pressure Washer	6/29/11	512				512	5	MO	S/L	512	0
120	Steps	4/11/12	20,322				20,322	15	MO	S/L	8,129	1,355
121	Steps	10/24/12	307				307	15	MO	S/L	111	20
123	Parking Lot Improvements	5/21/12	11,500				11,500	15	MO	S/L	4,472	767
124	Vacuum	7/30/12	393				393	5	MO	S/L	393	0
125	Quickbooks	8/04/12	2,888				2,888	5	MO	S/L	2,888	0
126	Cab Kit	9/09/12	2,783				2,783	5	MO	S/L	2,783	0
127	Tires	9/09/12	558				558	5	MO	S/L	558	0
129	Roofing	1/21/13	294,873				294,873	15	MO	S/L	101,567	19,659
130	Yardi	3/05/13	3,379				3,379	5	MO	S/L	3,379	0
	Sold/Scrapped: 4/01/18											
131	Love Seat, Sofa and 6 Kitchen Chairs	6/09/14	1,240				1,240	7	MO	S/L	679	177
133	Sofa, Love Seat & Chairs	4/27/16	1,174				1,174	7	MO	S/L	322	167
134	Water Heater	4/13/16	0				0	0	HY		0	0
135	Water Heater - Laundry	6/02/16	0				0	0	HY		0	0
136	Interior/Exterior Repairs	8/04/17	30,644				30,644	15	MO	S/L	1,362	2,043
137	Water Heater Bldng 7	1/05/18	7,838				7,838	5	MO	S/L	392	1,567
138	Phone System ESI 50	4/06/18	2,495				2,495	5	MO	S/L	0	499
	Total Other Depreciation		4,392,274				4,392,274				3,492,602	112,213
	Total ACRS and Other Depreciation		4,392,274				4,392,274				3,492,602	112,213
	Grand Totals		4,534,706				4,534,706				3,505,335	117,392
	Less: Dispositions and Transfers		3,379				3,379				3,379	0
	Net Grand Totals		4,531,327				4,531,327				3,501,956	117,392

Depreciation Adjustment Report
All Business Activities

Form	Unit	Asset	Description	Tax	AMT	AMT Adjustments/ Preferences
MACRS Adjustments:						
Page 1	1	132	Sewer Line Replacement	5,179	5,179	0
				5,179	5,179	0

Asset	Description	Date In Service	Cost	Tax	AMT
Prior MACRS:					
132	Sewer Line Replacement	10/31/15	142,432	5,179	5,179
			142,432	5,179	5,179
Other Depreciation:					
1	Fully Depreciated Improvements	1/01/80	195,270	0	0
2	Earthwork	5/01/80	68,414	1,710	1,710
3	Site Improvements	5/01/80	10,210	255	255
4	Trees	10/01/87	2,045	0	0
5	Speed Bumps	10/10/89	1,120	0	0
6	Concrete	8/09/91	4,436	0	0
7	Concrete	8/21/95	29,650	0	0
9	Walkways	7/29/99	6,168	0	0
10	Walkways	2/28/01	11,965	0	0
11	Walkways & Ramps	10/01/01	12,339	0	0
13	Walkways	10/01/02	6,770	0	0
14	Landscaping	10/01/02	5,269	0	0
15	Fencing	8/05/02	1,458	0	0
16	Walkways	8/15/03	7,658	0	0
18	Walkways	9/01/05	17,204	1,147	1,147
20	Walkways	8/01/06	4,419	294	294
21	Walkways	7/01/07	12,917	862	862
22	Walkways	3/01/08	4,665	311	311
23	Fully Depreciated Buildings	1/01/80	6,465	0	0
24	Buildings	5/01/80	1,677,085	41,928	41,928
25	Constr. Period Int.	5/01/80	103,655	2,591	2,591
26	Roofing	12/02/91	7,565	0	0
27	Roofing	3/01/95	30,560	0	0
28	Handicap Ramps	12/01/94	8,816	0	0
29	Plumbing	12/01/94	14,447	0	0
30	Roofing	3/31/95	27,000	0	0
31	Building Repair	3/31/95	2,150	0	0
32	Concrete Steps	3/13/98	679	0	0
33	Handicap Ramps	7/29/99	6,070	0	0
34	Handicap Railings	9/01/99	1,700	0	0
35	Handicap Ramps	2/28/01	6,131	0	0
36	Handicap Ramps & Patio	11/01/01	8,766	0	0
37	Handicap Railings	4/09/01	1,526	0	0
38	Balcony Repair	11/01/01	8,300	0	0
39	Tile	7/15/01	4,450	0	0
40	Signs	10/01/01	3,417	0	0
41	Paint Exterior	11/01/01	110,994	0	0
42	Shower Tub	6/06/01	1,450	0	0
43	Tile	2/01/04	6,723	0	0
44	Trim	10/01/03	17,780	0	0
45	Concrete Steps	3/07/05	1,619	99	99
46	Tile	3/01/05	2,669	163	163
47	Paint Trim	8/28/06	24,699	1,646	1,646
48	Concrete Steps	7/09/07	2,283	152	152
49	Fully Depreciated Buildings Equipment Fixed	1/01/80	414,971	0	0
50	Rec. Bldg	6/04/99	3,650	0	0
51	Hot Water Heater	12/21/01	2,560	0	0
52	Lights	7/23/02	2,748	0	0
53	Water Heaters	6/18/03	2,182	0	0
54	Pump	3/04/04	772	0	0
62	Appliances	10/01/04	35,781	0	0
63	Appliances	10/01/05	32,070	0	0
64	Appliances	10/01/06	26,630	0	0
65	Appliances	10/01/07	19,763	0	0
66	Appliances	10/01/07	6,148	0	0
68	Filing Cabinets	3/14/01	834	0	0
69	Upholstry Chairs	3/28/01	2,074	0	0
80	Carpet	10/01/04	30,889	0	0
81	Furniture	2/01/05	5,354	0	0
82	Flooring	10/01/05	42,799	0	0

Asset	Description	Date In Service	Cost	Tax	AMT
83	Furniture (C/A)	10/01/05	16,650	0	0
84	Flooring	10/01/06	32,750	0	0
85	Flooring	10/01/07	17,347	0	0
86	Flooring	10/01/07	5,270	0	0
88	Shed	12/12/00	1,552	0	0
89	Billy Goat	8/30/01	1,137	0	0
90	Mule	1/23/03	11,256	0	0
91	Shed	12/06/02	1,669	0	0
92	Shed	1/03/03	822	0	0
93	Floor Machine	6/17/04	2,708	0	0
94	Land	5/01/80	252,019	0	0
95	Chairs, Lamps, Coffee Sets	8/25/09	696	0	0
96	Charis & Lamps	11/19/09	421	0	0
97	Coffee Tables, End Tables, Lamps & Side Chair	2/17/10	1,203	0	0
99	Muratec Copier	4/14/09	5,363	0	0
100	Dell Computer	4/29/09	737	0	0
101	File Cabinet	8/12/09	623	0	0
102	Snow Blower	11/18/09	645	0	0
103	Rails	7/28/10	6,156	410	410
104	Handicap Ramp	7/28/10	3,217	214	214
105	Curbs	8/16/10	5,813	388	388
106	Sofa and Loveseat	11/27/10	899	0	0
107	Security Cameras	3/29/11	36,291	0	0
108	Trailor	8/06/10	5,963	0	0
109	New Curbs	1/28/12	1,291	86	86
110	Parking Lot Improvements	9/12/11	484,550	32,303	32,303
111	Furniture	6/21/11	538	0	0
112	Sofa	7/26/11	966	0	0
113	Sofa	8/17/11	538	0	0
114	Tables and Chairs	10/26/11	405	0	0
115	Chairs	3/02/12	207	0	0
116	DVD Upgrade	5/27/11	568	0	0
117	File Cabinet	3/12/12	590	0	0
118	Dell Computer	3/27/12	1,995	0	0
119	Pressure Washer	6/29/11	512	0	0
120	Steps	4/11/12	20,322	1,354	1,354
121	Steps	10/24/12	307	21	21
123	Parking Lot Improvements	5/21/12	11,500	767	767
124	Vacuum	7/30/12	393	0	0
125	Quickbooks	8/04/12	2,888	0	0
126	Cab Kit	9/09/12	2,783	0	0
127	Tires	9/09/12	558	0	0
129	Roofing	1/21/13	294,873	19,658	19,658
131	Love Seat, Sofa and 6 Kitchen Chairs	6/09/14	1,240	177	177
133	Sofa, Love Seat & Chairs	4/27/16	1,174	168	168
134	Water Heater	4/13/16	2,229	446	0
135	Water Heater - Laundry	6/02/16	4,553	910	0
136	Interior/Exterior Repairs	8/04/17	30,644	2,043	2,043
137	Water Heater Bldng 7	1/05/18	7,838	1,568	1,568
138	Phone System ESI 50	4/06/18	2,495	499	499
	Total Other Depreciation		4,405,365	112,170	110,814
	Total ACRS and Other Depreciation		4,405,365	112,170	110,814
	Grand Totals		4,547,797	117,349	115,993

Form **990**

Two Year Comparison Report

For calendar year 2018, or tax year beginning 04/01/18 , ending 03/31/19

2017 & 2018

Name

Northern Nevada Building & Construc Trades Council Development Corp

Taxpayer Identification Number

-*6297

			2017	2018	Differences
Revenue	1. Contributions, gifts, grants	1.	2,553		-2,553
	2. Membership dues and assessments	2.			
	3. Government contributions and grants	3.	835,887	887,140	51,253
	4. Program service revenue	4.	304,675	375,907	71,232
	5. Investment income	5.	264	368	104
	6. Proceeds from tax exempt bonds	6.			
	7. Net gain or (loss) from sale of assets other than inventory	7.			
	8. Net income or (loss) from fundraising events	8.			
	9. Net income or (loss) from gaming	9.			
	10. Net gain or (loss) on sales of inventory	10.			
	11. Other revenue	11.			
	12. **Total revenue.** Add lines 1 through 11	12.	1,143,379	1,263,415	120,036
Expenses	13. Grants and similar amounts paid	13.			
	14. Benefits paid to or for members	14.			
	15. Compensation of officers, directors, trustees, etc.	15.			
	16. Salaries, other compensation, and employee benefits	16.	353,211	389,552	36,341
	17. Professional fundraising fees	17.			
	18. Other professional fees	18.	127,312	139,792	12,480
	19. Occupancy, rent, utilities, and maintenance	19.	582,413	537,092	-45,321
	20. Depreciation and Depletion	20.	118,287	117,128	-1,159
	21. Other expenses	21.	119,879	74,888	-44,991
	22. **Total expenses.** Add lines 13 through 21	22.	1,301,102	1,258,452	-42,650
	23. **Excess or (Deficit).** Subtract line 22 from line 12	23.	-157,723	4,963	162,686
Other Information	24. Total exempt revenue	24.	1,143,379	1,263,415	120,036
	25. Total unrelated revenue	25.			
	26. Total excludable revenue	26.	304,939	376,275	71,336
	27. Total assets	27.	1,211,715	1,191,066	-20,649
	28. Total liabilities	28.	87,836	62,225	-25,611
	29. Retained earnings	29.	1,123,879	1,128,841	4,962
	30. Number of voting members of governing body	30.	9	3	
	31. Number of independent voting members of governing body	31.	0	0	
	32. Number of employees	32.	6	7	
	33. Number of volunteers	33.	9	9	

Form **990** | **Tax Return History** | **2018**

Name: Northern Nevada Building & Construc Trades Council Development Corp

Employer Identification Number: **-***6297

	2014	2015	2016	2017	2018	2019
Contributions, gifts, grants	792,079	830,487	820,007	838,440	887,140	
Membership dues						
Program service revenue	295,710	243,391	266,483	304,675	375,907	
Capital gain or loss						
Investment income	161	164	170	264	368	
Fundraising revenue (income/loss)						
Gaming revenue (income/loss)						
Other revenue						
Total revenue	1,087,950	1,074,042	1,086,660	1,143,379	1,263,415	
Grants and similar amounts paid						
Benefits paid to or for members						
Compensation of officers, etc.						
Other compensation	334,072	356,443	347,271	353,211	389,552	
Professional fees	127,613	128,164	137,312	127,312	139,792	
Occupancy costs	446,860	542,720	494,459	582,413	537,092	
Depreciation and depletion	134,597	134,394	124,257	118,287	117,128	
Other expenses	70,008	77,122	68,934	119,879	74,888	
Total expenses	1,113,150	1,238,843	1,172,233	1,301,102	1,258,452	
Excess or (Deficit)	-25,200	-164,801	-85,573	-157,723	4,963	
Total exempt revenue	1,087,950	1,074,042	1,086,660	1,143,379	1,263,415	
Total unrelated revenue						
Total excludable revenue	295,871	243,555	266,653	304,939	376,275	
Total Assets	1,581,356	1,437,360	1,365,477	1,211,715	1,191,066	
Total Liabilities	49,378	70,183	83,873	87,836	62,225	
Net Fund Balances	1,531,978	1,367,177	1,281,604	1,123,879	1,128,841	

Federal Statements

Taxable Interest on Investments

Description	Amount	Unrelated Business	Exclusion Code	Postal Code	Acquired after 6/30/75	US Obs ($ or %)
INTEREST INCOME	$ 419					
INTEREST - TENANT SEC DEP	-51					
Total	$ 368					

Federal Statements

Form 990, Part IX, Line 24e - All Other Expenses

Description	Total Expenses	Program Service	Management & General	Fund Raising
Payroll Direct Deposit Ex	$ 245	$	$ 245	$
BANK SERVICES CHARGES	95		95	
Total	$ 340	$ 0	$ 340	$ 0

Federal Statements

Schedule A, Part II, Line 1(e)

Description	Amount
RENT INCOME - HUD	$ 887,140
Total	$ 887,140

Schedule A, Part II, Line 12 - Current year

Description	Amount
RENT INCOME - TENANTS	$ 419,932
TENANT CHARGES	12,817
LAUNDRY INCOME	4,399
Tenant Security Dep Forfeited	3,196
Late fees	2,232
VACANCIES	-66,669
INTEREST INCOME	419
INTEREST - TENANT SEC DEP	-51
Total	$ 376,275

EXHIBIT 15F

NON-PROFIT FORMATION DOCUMENTS

All Form 990-Ts for the last three years.

NA - None

EXHIBIT 15G

NON-PROFIT FORMATION DOCUMENTS

Capital Campaign brochures, forms, pledge cards, and related materials, if any.

NA - None

Nevada State Infrastructure Bank

Financing Application

Nevada State Infrastructure Bank Overview:

The Nevada State Infrastructure Bank was established to provide low-cost financing to Nevada state agencies, local governments, Tribal governments, and non-profit organizations for priority infrastructure projects.

Pursuant to Chapter 408 of the Nevada Revised Statutes, the Bank may provide financing for a variety of infrastructure projects, including: transportation facilities, utility infrastructure, digital infrastructure, recycling and sustainability infrastructure, renewable energy infrastructure, social infrastructure, water and wastewater infrastructure, and other infrastructure related to economic development.

The Bank has been capitalized with an initial $75 million in State general obligation bonds that, are allocated to the following accounts within the Nevada State Infrastructure Bank:

- $40 million for projects for the Federal Infrastructure Matching Account;
- $20 million for projects for the Affordable Housing Revolving Account; and
- $15 million for projects for the Charter School Capital Needs Revolving Account.

In evaluating applications, the Bank will also seek to leverage outside capital and federal funding to help finance projects that improve quality of life, strengthen Nevada's climate resiliency, and help to promote a strong economy for communities across the State.

Application Instructions:

Please complete all sections of the application below and attach any required exhibits to request financing from the Nevada State Infrastructure Bank.

Prior to applying to the Bank for financing, please familiarize yourself with all the statutes and regulations governing the operation of the Bank.

The relevant statutory provisions can be found in Chapter 408 of the Nevada Revised Statutes (NRS 408.55048 – 408.55088).

Additionally, the regulations of the Bank provide the application requirements and describe the process for determining qualified projects and borrowers for applications to the Federal Infrastructure Matching Account, the Affordable Housing Revolving Account, and the Charter School Capital Needs Revolving Account.

Applications for financing will be reviewed by Bank staff and may be presented to the Board of Directors of the Nevada State Infrastructure Bank for consideration[1].

Completed, applications may be submitted as follows:

Via electronic mail:

Nevada State Infrastructure Bank

Email: *Financing.application@sib.nv.gov*

Via regular mail:

Nevada State Infrastructure Bank
c/o Executive Director
555 East Washington Avenue, Suite 5200
Las Vegas, Nevada 89101

-

[1] *Note: submission of an application does not guarantee Board consideration or project funding.*

Part 1: Applicant Information

Legal Name of the Applicant: City of West Wendover

Type of Applicant:

☒ Governmental Unit

☐ Indian Reservation or Colony

☐ Private Non-Profit Organization created for charitable or educational purposes

If applicant is a governmental unit or non-profit organization, please describe:

The City of West Wendover is a General Law Incorporated City operating under NRS 266

Mailing Address of the Applicant:

Street Address: 1111 N. Gene L. Jones Way - PO Box 2825

City, State, Zip Code: West Wendover, NV 89883

Name of the Individual Submitting this Application:

Chris J. Melville

Role/Title of the individual submitting the application:

City Manager

Address for the individual submitting the application:

Street Address: 1111 N. Gene L. Jones - PO Box 2825

City, State, Zip Code: West Wendover, NV 89883

Email for Individual submitting the application:

cmelville@westwendovercity.com

Phone number of individual submitting this application:

(775) 664-3081

Please list the contact information (Name, Address, Phone, Email) for other authorized individuals associated with the project (i.e., consultants, advisors, engineers, attorneys, etc.)

Name: Lauren Landa	Title: Interim Assistant City Attorney
Organization: Goicoechea, DiGrazia, Coyle & Stanton	Phone: (775) 738-8091
Street Address: 530 Idaho Street	Fax:
City, State, Zip: Elko, NV 89801	E-mail: laurenlanda@elkolawyers.com
Name: Darin Hawkes	Title: City Engineer of Record
Organization: Aqua Engineering, Inc.	Phone: (801) 683-3727
Street Address: 533 W 2600 S Suite 275	Fax:
City, State, Zip: Bountiful, UT 84010	E-mail: darin.hawkes@aquaeng.com

Part 2: Financing Requested

What type of financial assistance is the Applicant seeking? (Please select all that apply)

- [x] Loan
- [x] Grant
- [ ] Other Financial Assistance

Financing Amount Requested:

$1,642,623

Is the State Infrastructure Bank origination fee included in financing? (Please reference the regulations governing the Nevada State Infrastructure Bank)

- [ ] Yes
- [x] No

Financing term requested (Number of years): 35

Source of financing repayment:

- [ ] Enterprise Fund
- [ ] Special Fund
- [x] General Fund Lease
- [ ] Assessment District
- [ ] Special Taxes/Property Related Assessments
- [ ] Voter approved general obligation debt
- [x] Other

Please explain the source(s) of financing repayment:

The repayment source will be the city's General Fund and other assessments deemed appropriate as a repayment source.

Part 3: Project Information

Project Name: West Wendover Fire Station/Emergency Operations Center (EOC)

Project Address:

Street Address: 1113 N. Gene L. Jones Way

City, State, Zip Code: West Wendover, NV 89883

Project Category (Please reference Chapter 408 of the Nevada Revised Statutes):

- ☐ Transportation Facility
- ☐ Utility Infrastructure
- ☐ Water and Wastewater Infrastructure
- ☐ Renewable Energy Infrastructure
- ☐ Digital Infrastructure
- ☐ Recycling and Sustainability Infrastructure
- ☒ Social Infrastructure
- ☒ Other Infrastructure related to Economic Development

If the project category selected was "Other Infrastructure related to Economic Development" please explain the project:

Other infrastructure related to Economic Development was also selected as the project provides essential fire services related to the current and long term development of the community both commercially and residentially. Additionally, the new facility replaces an existing facility/property which has been leased for many years. With the relocation of the Fire Department operations, the owner of the facility/property will be able to move forward with expansion of their business operations including additional hospitality investments covering gaming and hotel expansions.

Is the project located in any of the following? (Please select all that apply)

☐ In a qualified census tract as designated by the United States Secretary of Housing and Urban Development pursuant to 26 U.S.C. § 42(d)(5)(B)(ii)

☐ In a census tract which has a high level of social vulnerability as determined according to the Social Vulnerability Index developed by the Centers for Disease Control and Prevention of the United States Department of Health and Human Services

☒ In a community which has a large percentage of the population having limited English proficiency

☐ In a community that has been subject to historical instances of redlining, segregation or other discriminatory practices

Is any part of the proposed project located on Tribal land?

☐ Yes

☒ No

Please attach a detailed description of the project. If the funding request is limited to a portion of the project, please identify as appropriate. If you have a feasibility study, a capital improvement plan, environmental study, or other such reports containing a detailed description of the project, please include as appropriate.

Attach all necessary documents as Exhibit 1. [Please label and attach items as Exhibits 1a, 1b, 1c, etc.]

If funding for the project is approved by the Nevada State Infrastructure Bank Board of Directors, how long will it take for this project to be completed?

Current schedule: Construction start 10-2023; completion 03-2025

Please list applicable permits for the project:

Type of Permit (Please include permit number)	Granting Authority	Date Submitted	Date Received	Expiration Date
Building Permit	City of West Wendover	10/16/2023	10/16/2023	06/30/2025

Please complete the attached Project Sources and Uses of Proceeds Table (located on page 22 of this document) as Exhibit 2. Attach any and all cost estimates, bids, project labor agreements, and construction contracts, if available. [Please label and attach them as Exhibits 2a, 2b, 2c, etc.]

Please provide for any and all documentation commitment(s) for project funding sources other than financing from the State Infrastructure Bank. This could include resolutions, grant agreements, loan agreements, contracts, etc. [Please label and them as Exhibit 3]

Is land acquisition a component of the project?

☒ Yes

☐ No

If yes, please provide a copy of the purchase agreement as Exhibit 4. Include a description of the land that has been or will be acquired (current owner, address, assessor's parcel number, purchase date or expected purchase date, cost or estimated cost), and identify the funding source(s) for the land below:

Exhibit 4 - Recorded Land Patent dated 3-11-2022 w/completed payments

Does the applicant already own the land needed for the project?

☒ Yes

☐ No

Please provide a comprehensive project timeline as Exhibit 5. Include specific project milestones such a preliminary engineering report, all required permits, design, engineering, land/right-of-way acquisition, preparation of bid documents, awarding of construction contract, construction start date, construction completion date, and the date that the project will become operational.

Private Activity - Will any entity, including a governmental entity other than the Applicant, use or directly benefit from any portion of the Project other than as a member of the general public? (For example, will a private entity or a federal agency operate, or lease space in the proposed project?)

☐ Yes

☒ No

If yes, please describe the entity that will use or otherwise benefit from the Project. Provide a copy of the agreement(s) with such private entity, or federal agency. [Please label and attach as Exhibit 6.]

Will financing be used to finance more than 5 percent of any private activity costs?

☐ Yes

■ No

If yes, please explain:

Business Relocation – Will the proposed Project require the relocation of a private sector business from one area of the State to another?

☐ Yes

■ No

If yes, please provide a justification to support the move:

Please describe any economic and/or community benefits that will result from the completion of this project. Please include the method, or calculation by which these results were identified:

The proposed project is a new facility designed by a reputable fire station design/build team (CORE/TSK) which have designed and constructed numerous fire service facilities in Nevada as well as surrounding states. The design of the new facility uses current NFPA, building code and industry standards and in addition is designed to accommodate not just the current fire service operations but as well, provides for the opportunity to expand the facility as operational needs grow.

Additionally, the new Fire Station will be located on city owned and controlled property, thus eliminating the current lease situation with the existing facility. Though the lease

What are the total number of jobs that will be created and the average wage for the project? (Please include the method or calculation by which these results were identified)

Please see the attached job creation (short and long-term) and wage matrix (Exhibit 7A) as provided by the Nevada Governor's Office of Economic Development for this project.

What are total number of jobs retained and the average wage? (Please include the method or calculation by which these results were identified)

Please see the attached job creation (short and long-term) and wage matrix (Exhibit 7A) as provided by the Nevada Governor's Office of Economic Development for this project.

Describe the environmental impact that will result from this project? (Please include the method or calculation by which these results were identified)

This original environmental work was completed in 2018 by USDA Rural Development as part of the City Hall/Government Complex Project as the Fire Station is a component of such project, see Exhibit 2B. Additionally an updated environmental assessment is currently being completed as part of the recently awarded Nevada CDBG funding. That documentation has a tentative completion date of August 31st.

Does this project comply with the with the standards and goals set forth in the 2020 Nevada Climate Strategy and the goals for the reduction of greenhouse gas emissions set forth in NRS 445B.380 and 704.7820?

☐ Yes

☐ No

☒ Unsure

Useful Life - Please provide evidence detailing the useful life of the Project. Useful life is defined as the estimated number of years the project is anticipated to remain in service. Please include estimated useful life projections with and without any anticipated maintenance costs. [Label and attach as Exhibit 7]

Is this project eligible to apply for funding from the Affordable Housing Revolving Account within the Nevada State Infrastructure Bank Fund? (Please reference the Nevada State Infrastructure Bank regulations for the guidelines and policies for the Affordable Housing Revolving Account.)

☐ Yes

☒ No

☐ Unsure

Is this project eligible to apply for funding from the Charter School Capital Needs Revolving Account within the Nevada State Infrastructure Bank Fund? (Please reference the Nevada State Infrastructure Bank regulations for the guidelines and policies for the Charter School Capital Needs Revolving Account.)

☐ Yes

☒ No

☐ Unsure

Is this project eligible to apply for funding from the Federal Infrastructure Matching Account within the Nevada State Infrastructure Bank Fund? (Please reference the Nevada State Infrastructure Bank regulations for the guidelines and policies for the Federal Infrastructure Matching Account.)

☐ Yes

☐ No

☒ Unsure

Is this project eligible to apply for funding from the State Infrastructure Bank General Account within the Nevada State Infrastructure Bank Fund? (Please reference the Nevada State Infrastructure Bank regulations for the guidelines and policies for the State Infrastructure Bank General Account.)

☒ Yes

☐ No

☐ Unsure

Part 4: Financial Information

Please provide copies of the five most recent fiscal year-end audited financial statements for the applicant and related parties to the project, if not already provided, as well as applicable revenue projections and cash flows. [Label and attach as Exhibits 8a, 8b, 8c, etc.]

Please provide the current year's adopted budget as Exhibit 9.

Are there any events or circumstances that have occurred since the date of the last financial statement could materially affect the overall financial condition of the Applicant?

☐ Yes

☒ No

If yes, please explain:

In the table below, please list all outstanding financing obligations (debts, notes, capital leases, etc.) secured by the source of repayment for the requested financing. Attach as Exhibit 10, and include a copy of all financing documents (e.g., the official statement along with any underlying loan agreements, lease agreements, or indentures, etc.) [Label and attach as Exhibits 10a, 10b, 10c, etc.]

Name of Lender	Date of Debt	Outstanding Balance (as of 06/30/2023)	Maximum Annual Debt Service/Lease Payment
USDA	08/18/2009	$3,617,732.92	$313,500
Pinnacle	07/14/2015	$618,000	$210,718.10
*Western Alliance Business	03/30/2022	$ Interest Only on Draws	$ N/A
*Western Alliance Business	09/15/2022	$ Interest Only on Draws	$ N/A

Please provide a description of any off-balance-sheet debt obligations, including capital leases and other contractual obligations:

*Two (2) Western Alliance Business Trust Interim Debentures are Off Balance Sheet as they will be closed out by USDA Loans at the completion of the related projects (Fire Station/EOC and Downtown Infrastructure Phase 1). See Exhibit 10C and 10D

Has the Applicant defaulted on any debt or other obligation including, but not limited to, bonds, leases, or loans within the last ten years?

☐ Yes

☒ No

If yes, please specify the date(s) and circumstances:

Please attach as Exhibit 11 the current Capital Improvement Plan. Explain below any expected plan for future debt issuance:

The most recent West Wendover CIP was adopted in July of 2022 and will be updated in July 2023. The CIP includes many projects a few of which have funding models in place to which construction and/or engineering/design is underway. Of the projects listed in the CIP the following are relevant:

No. 1 City Downtown Infrastructure Phase 1
No. 2 Fire Station/EOC Facility
No. 3 Interoperability, Police, Police Dispatch and Emergency Services
No. 4 West Wendover Clinic Digital X-ray Upgrade

Does the Applicant have an Inter-fund Transfer Policy?

☐ Yes

☒ No

If yes, please attach a copy of the policy as Exhibit 15.

Is the Applicant planning on utilizing any collateral in order to receive a loan or other financial assistance?

☐ Yes

☒ No

If yes, please explain:

Part 5: Loan Proceeds

Will the loan proceeds pay for any general administration or overhead costs?

☐ Yes

☒ No

Have any general administration or overhead costs already been incurred?

☒ Yes

☐ No

If yes, please explain:

There have been general administration costs on the project but the city does not account for those with applications for grants or financing of projects. They are considered general costs that the city absorbs as part of completing projects.

Will the Project include the payment of prevailing wages as set forth in NRS Chapter 408?

☒ Yes

☐ No

Will loan proceeds finance preliminary costs for the Project?

☐ Yes

☒ No

Have any preliminary costs already occurred?

☒ Yes

☐ No

If yes, please explain:

The project has completed Phase 1A and Phase 1B Design and Guaranteed Maximum Price (GMP). Phase 1B is anticipated to be accepted by the City Council and USDA on or before September 5, 2023. With the acceptance of Phase 1B GMP the project can then move into Phase 2, Final Design (remaining 30%) and construction to follow Fall of 2023.

Part 6: Legal Information

Please describe the composition of the Applicant's governing body, including the number of positions, term, and the selection/appointment process. Additionally, please provide a current list of individuals in these positions:

The Governing Board includes 6 elected positions under NRS 266: Mayor and 5 Council Members. The offices are set with 4 year staggering terms. The offices are part of the General Election cycle.

Current office holders:
Jasie Holm, Mayor
Nicolas Flores, City Council Member
Juan Gorum, City Council Member
John Hanson, City Council Member
Gabriela Soriano, City Council Member
Robert Trujillo, City Council Member

Has the governing body approved the application? (Please provide written documentation confirming approval):

Please describe any pending or anticipated litigation and/or contractual disputes that the Applicant is a party to:

None

Please describe any past, present, or potential issues or controversies that may impact the Project:

None

For any applicant that is a Charter City, please attach as Exhibit 16 a copy of the City's Charter including all addendums and supplements thereto.

For any applicant that is a School District, Special District, or Joint Powers Authority (JPA), please provide the statutory citation of formation authority or attach a copy of all formation documents and amendments as Exhibit 17.

For any applicant that is a non-profit organization, please provide as Exhibit 18, a copy of the following:

a. Articles of Incorporation, together with all amendments.

b. Certificate of Status/Good Standing in the State of Nevada.

c. Bylaws, together with all amendments.

d. 501 (c)(3) Determination Letter(s) from the IRS, and any related documents and correspondence with/from the IRS.

e. All Form 990s for the last three years

f. All Form 990-Ts for the last three years.

g. Capital Campaign brochures, forms, pledge cards, and related materials, if any.

Applicant acknowledges the following

All information submitted to the Nevada State Infrastructure Bank is true and correct at the time of submission, and such information does not contain any untrue or misleading statement of a material fact or omits to state any material fact necessary to make the statements contained herein not misleading. Further, applicants affirm, understand, and accept the obligations, terms, and conditions of loans and other financial assistance offered by the Bank.

By signing below, I acknowledge that I understand that it is unlawful to knowingly make a false claim, a false statement, use a false of fictitious name, or obtain money or benefit under false pretenses. I understand these acts are a violation of the laws of the State of Nevada punishable by civil penalties, including repayment, and/or criminal penalties including up to a category D felony and six years in state prison.

Print Name: CHRIS J. MELVILLE

Print Title: CITY MANAGER

Authorized Signature: Chris J. Melville Digitally signed by Chris J. Melville Date: 2023.08.29 14:57:45 -06'00'

Date: 08/29/2023

Application Checklist

(Complete and submit all required documents below with the Financing Application)

SIB Staff Use	INDICATE WHETHER OR NOT EACH DOCUMENT IS ATTACHED TO THIS APPLICATION			APPLICATION EXHIBITS	
Date Rec'd	*YES*	*NO*	*N/A*		
	◉	○	○	Application	Signed and Dated
	◉	○	○	Exhibit 1	Study, Plan, or Other Report with Detailed Project Description
	◉	○	○	Exhibit 1a	Approval from governing body to submit application
	◉	○	○	Exhibit 2	Sources and Uses of Proceeds Table
	◉	○	○	Exhibit 2a	Detailed cost estimates, bids, and construction contracts, that support Exhibit. Label each Exhibit a, b, c, etc.
	◉	○	○	Exhibit 2b	Explanation of potential environmental impacts potential environmental impacts. -Environmental study.
	◉	○	○	Exhibit 3	Documentation Demonstrating Commitment of Other Project Funding Sources (includes Applicant's contribution). Label each Exhibit a, b, c, etc.
	○	○	◉	Exhibit 3a	Project cash flow projections
	○	○	◉	Exhibit 3b	Bond rating agency report (if available)
	◉	○	○	Exhibit 3c	Existing property tax rates, and general obligation bonding capacity (governmental entities only)
	○	○	◉	Exhibit 3d	Historical revenues and expenses of proposed revenue source
	◉	○	○	Exhibit 4	Real Estate Purchase Agreement (if applicable)
	◉	○	○	Exhibit 5	Project Timeline
	○	○	◉	Exhibit 6	Project Benefit Information
	○	○	◉	Exhibit 6a	Project population trends
	○	○	◉	Exhibit 6b	Project assessed value trends

	◉	○	○	Exhibit 7	Useful Life Exhibit
	◉	○	○	Exhibit 8	Five (5) Years Audited Financial Statements [and any applicable revenue projections and cash flows]. -Cash flow available for debt service and debt service coverage ratio -Label each Exhibit a, b, c, etc.
	◉	○	○	Exhibit 9	Current Year Adopted Budget
	◉	○	○	Exhibit 10	Documentation of Outstanding Debt Obligations Label each Exhibit a, b, c, etc.
	◉	○	○	Exhibit 11	Current Capital Improvement Plan
	○	○	◉	Exhibit 12	Documentation of compliance with Nevada's Climate Strategy for the year 2020 and goals for reduction of greenhouse gas emissions set forth in NRS 445B.380 and 704.7820
	○	○	◉	Exhibit 13	Documentation of project compliance with NSIB regulation Sec. 17 (project labor standards)
	○	○	◉	Exhibit 14	Documentation that the average percentage of pupils who are served by all of those schools and are pupils who are at risk, as defined in NRS 388A.045, is 60% or greater (Charter School fund applicants only)
	○	○	◉	Exhibit 14a	Written authorization for the project from the sponsor of the charter school (Charter School fund applicants only)
	○	○	◉	Exhibit 15	Interfund Transfer Policy/Reimbursement Agreement (if applicable)
	○	○	◉	Exhibit 16	Charter City Information and Questionnaire (if applicable)
	○	○	◉	Exhibit 17	Districts Formation Documents and Amendments (If applicable)
	○	○	◉	Exhibit 18	Non-Profit Applicants Exhibits. (if applicable) Label each Exhibit a, b, c, etc.

Exhibit 2

SOURCES AND USES OF PROCEEDS TABLE

(NOTE: Please attach as Exhibit 2a, detailed cost estimates, bids, and construction contracts, etc. to support data provided in the table.)

PROJECT USES	*PROJECT FUNDING SOURCES*						
	Estimated Life of the Project	**SIB**	**[Applicant]**	**Other** USDA Loan	**Other** Nevada CDBG Grant	**Other** USDA Grant	**TOTAL**
Land Acquisition	38			$840,000			$840,000
Building Construction/Renovation		$1,642,623	$2,025,335	$7,329,416	$500,000	$200,000	$11,697,374
Construction Contingency			$299,933				$299,933
Machinery/Equipment							
Engineering/Architectural/ Design/Permits/Environmental				$485,117			$485,117
SIB Origination Fee							
Other: Interim Loan Interest Exp				$100,000			$100,000
Other: Cost of Interim & Bond Counsel				$152,267		$200,000	$152,267
TOTAL		$1,642,623	$2,325,268	$8,906,800	$500,000	$200,000	$13,574,691

Please provide the justification in determining the useful life of the Project:

TABLE OF CONTENTS ALL EXHIBITS

Exhibit 1-01:	**Project Description and Need**
Exhibit 1-02:	**West Wendover Capital Improvement Plan (Page 1) Adopted 7-18-2023**
Exhibit 1-03:	**CORE/TSK Phase 1B GMP Deliverables (August 7, 2023)**
Exhibit 1-04:	**CORE/TSK Phase 1A Deliverables (January 10, 2023)**
Exhibit 1-05:	**Original USDA Preliminary Architectural Feasibility Report (July 2018)**
Exhibit 1A:	**Governing Board Approval of Application**
Exhibit 2:	**Sources and Uses of Proceeds Table**
Exhibit 2A-01:	**Funding Cost Analysis 8-8-2023**
Exhibit 2A-02:	**Design/Construction Cost 8-8-2023**
Exhibit 2A-03:	**West Wendover/CORE Construction Contract**
Exhibit 2B-01:	**2018 USDA Environmental Document**
Exhibit 2B-02:	**2023 Nevada CDBG EA**
Exhibit 3-01:	**USDA Loan Approval Fire Station**
Exhibit 3-02:	**USDA Grant and Amendment No. 1 to Letter of Conditions**
Exhibit 3-03:	**Nevada CDBG 2023 Grant Award Documentation**
Exhibit 3-04:	**West Wendover Support Letter**
Exhibit 3-05:	**Nevada Division of Emergency Management Support Letter**
Exhibit 3C:	**Existing Property Tax Rate and General Obligation Bonding Capacity**
Exhibit 4:	**Property Ownership Documentation**
Exhibit 5:	**Current Project Schedule 8-7-2023**
Exhibit 5A:	**Phase 1B Design Deliverables with Guaranteed Maximum Price (GMP)**
Exhibit 7:	**Project Useful Life**
Exhibit 7A:	**West Wendover Fire Station Project Nevada CDBG Job Impact Analysis**
Exhibit 8A-01:	**FY2022 Audit**
Exhibit 8A-02:	**FY2022 Single Audit**
Exhibit 8B:	**FY 2021 Audit**
Exhibit 8C:	**FY 2020 Audit**
Exhibit 8D:	**FY 2019 Audit**
Exhibit 8E:	**FY 2018 Audit**
Exhibit 8F:	**West Wendover Financial Forecast, Income Statement 8-12-2023**
Exhibit 8G:	**West Wendover Financial Forecast, Cash Flow Analysis 8-12-2023**
Exhibit 8H:	**West Wendover Financial Forecast, Balance Sheet 8-12-2023**
Exhibit 9:	**Final Budget FY2024**
Exhibit 10:	**West Wendover Outstanding Obligations Schedule**
Exhibit 10A:	**USDA Loan 97-19 City Hall/Government Complex**
Exhibit 10B:	**Pinnacle Medium Term Obligation Florence Way**
Exhibit 10C:	**Western Alliance Business Trust Interim Debenture Fire Station**
Exhibit 10D:	**Western Alliance Business Trust Interim Debenture Downtown Inf Phase 1**
Exhibit 11:	**West Wendover Capital Improvement Plan FY24-28, Adopted 7-18-2023**

EXHIBIT 1-01

WEST WENDOVER
FIRE STATION EMERGENCY OPERATIONS CENTER

Description:

The West Wendover Fire Station Emergency Operations Center (WWFS-EOC) Project includes the construction of a facility of approximately 11,300 sqft in size. The facility includes just over 2,100 sqft of office and general operations area along with 9,400 sqft of apparatus bays and support area.

The facility is designed to accommodate future expansion as needs develop including expansions to office areas, training rooms, storage and living quarter components. The city anticipates this new facility will eventually be staffed on a full-time 24-hour basis.

The WWFS-EOC is an important long-term public safety facility for the City of West Wendover and has been listed in the city's annual Capital Improvement Plan for many years. Currently the project is listed as No. 2, behind the Downtown Development Infrastructure Phase1 Project which is nearing completion. The project was originally planned in 2007 to be part of the construction of the City Hall Government Complex. However, due to cost, the facility was delayed. Now more than a decade later, this important project is finally moving forward. The need for the new Fire Station is based on having an adequately sized facility that is capable of expansion and being located on local government owned and controlled property. The existing Fire Station was constructed in the mid 1980's by Elko County prior to the city's incorporation and is of inadequate size and design. Further complicating the existing facility is that it is located on approximately 1.5 acres of leased property. Though the current facility with its three (3) short apparatus bays was adequate for the needs of the community in the mid 1980's under Elko County, today the community is 4 times the size and the current facility is significantly undersized, outdated under NFPA standards and as noted, remains under an untenable lease situation. The property owner at this time desires to invest in growth and expansion of their current business facilities and operations and is no longer open to a renewal of the lease going forward. Thus, the city at this time is on a month-to-month lease while the new WWFS-EOC is being completed.

The proposed project is a new facility designed by a reputable fire station design/build team (CORE/TSK) which have designed and constructed numerous fire service facilities in Nevada as well as surrounding states. The design of the new facility uses current NFPA, building code and industry standards and in addition is designed to accommodate not just the current fire service operations but as well, provides for the opportunity to expand the facility as operational needs grow. The new facility will be located on city owned and controlled property, thus eliminating the current lease situation with the existing facility. Though the lease situation was acceptable in the past, with today's business opportunities and growth, the owner of the property has scheduled to expand an adjacent business (Rainbow Hotel and Casino). Thus, in addition to meeting the needs of the city's fire service for the future with the new facility design and its location on city owned property, with the relocation of our fire service operations, there will be the ability over the next several years for additional business investment and job growth in the community to occur related to the expansion of the adjacent commercial operations.

Construction of a new facility will be located west and adjacent the West Wendover City Hall on N. Gene L. Jones Way, West Wendover, Nevada.

The completed project will include the following contained within an approximate 1.50 acre site:

- Building Bay Area (9,300 sqft)

    - (5) 85ft equipment apparatus bays
    - (2) decontamination rooms
    - Shower room and laundry
    - Bay storage totaling approximately 9,300 sqft. Incl. EOC equipment area.

- Building Office Area (2,100 sqft)
    - Reception area
    - Staff offices
    - Training room/Day room/EOC area
    - Kitchen
    - IT/Com room
    - Storage
    - Public restroom, etc.

  * The Building Office Area portion will be expandable in the future as need arises.

- Site:
    - Front and rear building equipment aprons
    - Street improvements and facility access
    - Parking areas
    - Landscaping, lighting and signage

The facility will meet all local and state code requirements including current NFPA regulations and requirements related to its use as an Emergency Operations Center.

CITY OF WEST WENDOVER
FIVE YEAR CAPITAL IMPROVEMENT PROJECTS PLAN
FISCAL 2023-2024 thru 2027-2028
By Priority

√ Denotes Project process, engineering design and/or construction underway.

2023-2024

1. **√ CITY DOWNTOWN INFRASTRUCTURE PHASE 1 – COST ($7,084,199).**
With the City proceeding with planned development initiatives on the City Center/Downtown property Phase 1 infrastructure needs to be completed. This infrastructure will include an extension to Pueblo Boulevard to the north of approximately 900 feet in a complete street design as well as related utility infrastructure which will service the Phase 1 area that will contain approximately 60 acres of land for commercial development.

Progress Report: Project under construction, completion scheduled for September 2023. Funding by USDA loan, Nevada CDBG Grant, U.S. EDA Grant, NGM Grant and General Fund ARP Allocation. FY2023-2024

2. **√ FIRE STATION FACILITY – COST ($14,773,822).**
The current Fire Station is located on private land, which the City has leased on a yearly basis. The existing facility is limited in size and capability given its initial size and related construction and the property owner has chosen not to provide future lease of the facility. The community has more than quadrupled in size since the original facility was built and now the long-term needs of the community are not being met. The City has a site selected and partially developed to accommodate the new fire station facility, located adjacent to the City Hall on N. Gene L. Jones Way. The project is currently completing design and scheduled for construction late fall of 2023 under a Design/Build Contract with CORE Construction.

Progress Report: Design nearing completion, construction scheduled for late fall 2023 with expected one year construction. This project to be funded through USDA loan (obligated) and General Fund ARP Allocation and Other Grants/Loans FY 2023-2024

3. **√ INTEROPERABILITY, POLICE, POLICE DISPATCH AND EMERGENCY SERVICES TOWER/MOBILE DATA – COST *($426,000)***
The City of West Wendover continues its progress with regard to upgrades to the City's interoperability for Public Safety which includes adding an additional radio tower at the Public Works Facility to enhance coverage of the eastern end of the community along with providing increased signal penetration of commercial buildings for radio traffic. This project also includes upgrades to the Police Dispatch System for capability to integrate, use and transmit GIS, law enforcement and emergency services information from Dispatch to officers and personnel on the street via wireless networking and related equipment in vehicles.

Progress Report: Tower site location chosen, FAA permit in process for location. GIS base mapping complete, dispatch system has base capabilities for networking. Funding to be provided by General Fund and DOJ Technology Grant currently in place. Construction completion spring 2024. FY 2023-2024

4. **√ WEST WENDOVER CLINIC DIGITAL X RAY UPGRADE – COST ($320,000).**
This project is to complete an upgrade to the West Wendover Clinic Digital X-ray machine and related equipment. The project is being funded through a grant obtained through the Health Resources and Services Administration (HRSA).

Progress Report: X-ray acquisition process initiated. Completion of project by January 2024. Funding through HRSA Grant. FY 2023-2024

EXHIBIT 1-03

August 7, 2023

West Wendover Fire Station No. 13

Guaranteed Maximum Price (GMP)

TABLE OF CONTENTS

1. GMP
2. Basis of GMP
3. Schedule
4. Design Documents

CORE



"Where the West Begins"!

1.
GMP

West Wendover
Fire Station 13

Guaranteed Maximum Price

Prepared on: 7-Aug-23

#	Description		GMP	BREAKOUTS Included in base Access Road	ALTERNATES NOT included ALT #1 Cross Street Visitor Parking
	GENERAL		**$402,036**	**$0**	**$6,595**
GEN1	General Requirements		**$136,878**	$0	$6,595
GEN2	Scaffolding & Equipment		**$129,454**	$0	$0
GEN3	Waste Management & Cleaning Requirements		**$135,704**	$0	$0
	DEMOLITION / OFF-SITE INFRASTRUCTURE		**$0**	**$0**	**$0**
	SITE WORK (ROUGH)		**$1,218,642**	**$74,497**	**$75,515**
7	Horizontal Survey & Staking		**$19,418**	$0	$3,884
8	Earthwork, Paving, & Utilities		**$1,199,224**	$74,497	$71,631
	SITE WORK (FINISH)		**$672,269**	**$35,605**	**$36,700**
16	Landscaping & Irrigation		**$121,208**	$0	$26,554
18	Flag Pole		**$6,600**	$0	$0
23	Gates		**$12,330**	$0	$0
24	Site Concrete		**$434,311**	$35,605	$10,146
25	Site Masonry		**$97,820**	$0	$0
	STRUCTURE		**$1,598,359**	**$0**	**$0**
27	Structural Layout & Coordination		**$11,538**	$0	$0
30	Structural Concrete		**$685,133**	$0	$0
33	PEMB Structure		**$462,471**	$0	$0
36	Rough Carpentry		**$439,217**	$0	$0
	ENCLOSURE		**$1,687,162**	**$0**	**$0**
38	Moisture Protection		**$161,730**	$0	$0
40	Caulking & Sealants		**$50,258**	$0	$0
44	Thermal Insulation		**$53,432**	$0	$0
46	PEMB Enclosure		**$693,706**	$0	$0
48	Stucco / EIFS		**$195,711**	$0	$0
52	Exterior Aluminum, Glass, & Glazing		**$76,150**	$0	$0
54	Special Doors		**$456,175**	$0	$0
	INTERIOR FINISHES		**$759,215**	**$0**	**$0**
55	Temporary Requirements for Phasing / Quality Control		**$34,614**	$0	$0
56	Doors, Frames, & Hardware		**$119,364**	$0	$0
59	Casework & Finished Carpentry		**$73,723**	$0	$0
60	Drywall		**$291,747**	$0	$0
61	Paint & High-Performance Coatings		**$91,911**	$0	$0
62	Acoustical Ceiling Treament		**$42,183**	$0	$0
65	Carpet & Resilient Flooring		**$15,865**	$0	$0
66	Fluid-Applied Flooring		**$34,950**	$0	$0
67	Concrete Finishing		**$44,358**	$0	$0
70	Progressive & Final Clean Requirements		**$10,500**	$0	$0
	SPECIALTIES		**$94,412**	**$0**	**$0**
72	Building Signage		**$30,800**	$0	$0
74	Building Specialties		**$63,612**	$0	$0
	EQUIPMENT		**$222,366**	**$0**	**$0**
86	Residential Equipment & Appliances		**$67,490**	$0	$0
89	Fire Station Equipment		**$154,876**	$0	$0
	MEP SYSTEMS		**$1,855,142**	**$0**	**$0**
97	Fire Suppression System		**$68,182**	$0	$0
98	Plumbing Systems		**$652,830**	$0	$0
100	HVAC & Controls Systems		**$382,691**	$0	$0
103	Electrical Systems		**$751,440**	$0	$0
	UNIQUE FEATURES OF WORK		**$0**	**$0**	**$0**
	Subtotal		**$8,509,603**	**$110,102**	**$118,810**
	CONTINGENCIES & ALLOWANCES		**SUB TOTAL**		
2.5%	Design-Builder Contingency		$299,933	$2,753	$2,970
LS	Allowance #1: Utility Relocation (Fiber & Gas)		$75,000	$0	$0
	Subtotal		**$8,884,536**	**$112,855**	**$121,780**
RATE	**GENERAL CONDITIONS**		**SUB TOTAL**		
LS	General Conditions		$1,179,480		
LS	Warranty		$41,330		
	Subtotal		**$10,105,346**		
RATE	**INSURANCE, BONDS, AND BUILDERS RISK**		**SUB TOTAL**		
1.00%	General Liability		$119,974		
1.50%	Subcontractor Default Insurance		$137,768		
0.83%	Payment and Performance Bond		$100,165		
LS	Builders Risk Insurance		$74,384		
	Subtotal		**$10,537,637**	**$122,542**	**$132,234**
RATE	**CONTRACTOR'S FEE**		**SUB TOTAL**	**SUB TOTAL**	**SUB TOTAL**
4.50%	Design-Builder Fee		$516,631	**$5,514**	**$5,951**
	Subtotal		**$11,054,268**	**$128,057**	**$138,185**

	Working Project Cost	Access Road	ALT #1 Cross Street Visitor Parking
GMP Without Soft Costs	**$11,054,268**	**$128,057**	**$138,185**

	Project Soft Costs		Total Value
	Phase 2 A/E Design & Preconstruction Fees		$462,765
	Permits and Fees		$79,288
	FF&E Allowance (Other than Fire Station Equipment)		$101,053
2.5%	Owner Contingency		$299,933

	GMP	Access Road	ALT #1 Cross Street Visitor Parking
Guaranteed Maximum Price	**$11,997,307**	**$128,057**	**$138,185**

2.
Basis of GMP

BASIS OF GMP

City of West Wendover New Fire Station No. 13

PWP #EL-2023-434 | August 7, 2023

The Basis of GMP is a written explanation clarifying the scope, assumptions and exclusions used in establishing the Guaranteed Maximum Price (GMP) for the City of West Wendover New Fire Station No. 13 Project in West Wendover Nevada dated August 7, 2023. The GMP is presented in a ten group, systems format best utilized for analyzing and comparing project costs during design and preconstruction. This GMP is based on CORE's incorporation of the scope shown on the West Wendover New FS #13 60% DD documents dated May 3, 2023, and the scope clarifications below.

Assumptions, Clarifications, & Exclusions

SCHEDULE

This GMP is based upon performance of the work per the enclosed Preliminary Construction Schedule, which is an integral part of this GMP Package. This project has been divided into multiple phases, which are identified within the preliminary construction schedule and account for the overall construction duration and timeframe anticipated.

Schedule Clarifications:

- Microsoft Project Professional for Office 365 will be used as the schedule management program.
- We anticipate normal working hours 6:00 AM to 4:00 PM, Monday through Thursday, with some Friday and/or Saturday work as required to meet the schedule. Daily start and finish times are subject to change with changing weather conditions and daily sunrise/sunset time.
- All concrete pours are assumed to be early morning pours. If the authorities having jurisdiction do not allow early morning pours, the concrete pour sequence would be extended which would affect the critical path of the schedule.
- Activities within the Overall project schedule and general sequence of construction will be re-evaluated later when the GMP is executed.
- If the GMP does not start as scheduled on October 16th, 2023, CORE reserves the right to adjust General Conditions costs.
- Permitting timelines are allowances based on average timeframes of similar projects. Any delay caused by the permitting process is cause for a re-evaluation of the schedule and General Conditions.

Weather:

The following table represents a mutual understanding of the number of reasonable days of adverse weather per month where no weather dependent construction activities may occur due to unworkable field conditions. CORE has assumed the risk to make up for lost days per month in accordance with this table.

CORE shall be granted an extension of time for delays resulting from additional lost working days per calendar month beyond what is illustrated in the table in the GMP Proposal. The lost days illustrated in this schedule are per calendar month and shall not accrue from month to month.

(Eastern Nevada – Elko County Region)

Month	Number of Reasonably Anticipated Days of Adverse Weather Per Month	Average Precipitation
January	1	0.25

February	0	0.17
March	1	0.33
April	1	0.36
May	1	0.58
June	0	0.28
July	0	0.22
August	0	0.16
September	1	0.50
October	0	0.34
November	0	0.22
December	0	0.19

CORE considers soil condition that are unsuitable for heavy equipment operation to be adverse weather days. Additionally, driving conditions deemed unsafe for travel shall be deemed adverse weather days. CORE reserves the right to work Fridays and/or Saturdays in order to meet schedule.

Cost Clarifications

This GMP is based on the higher between 2023 Elko County Prevailing Wage Rates and 2023 Davis Bacon Wage Rates and includes Nevada sales tax. The value provided in the GMP includes all direct and indirect construction costs and includes typical project "soft costs". Soft costs included in this GMP are all design fees, loose/miscellaneous fire station equipment, and utility connection fees.

MATERIALS ECONOMIC IMPACTS

The parties acknowledge that some of the materials and products to be used and installed in the construction of this project may become unavailable, delayed in shipment and/or subject to price increases due to circumstances beyond the control of the Contractor. If a specified product is unavailable or shipment is delayed, Contractor shall provide written notice and shall be afforded additional time and substitute products may be considered. If there is an increase in price of materials, equipment, or products between the date of this contract and the time when the job is ready for the installation of the affected material, the amount of this contract shall be increased to reflect the additional cost to obtain the materials, provided that the Contractor gives the Owner written notice and documentation of the increased costs.

CONTINGENCIES

- **Design-Builder Contingency –** A 2.5% Design-Builder Contingency is included in this proposal and is intended to be used at CORE's discretion to cover costs that have not been completely identified or designed as trade specific scope on the GMP setting documents may require further clarification or coordination. These costs include, but not limited to, scope gap, coordination issues between trades, and missed scope during the bidding process. The Design-Builder Contingency is not intended to account for additional scope requests by the design / owner during construction.
- **Owner Contingency –** A 2.5% Owner Contingency is included in this proposal and is intended to be used at the City of West Wendover's discretion to cover costs for unforeseen or excluded items that are to be included as an amendment to the original contract.

ALLOWANCES

We have included the Allowances listed below in this GMP. These Allowances are considered to be an allotted sum of money included for a particular system or scope of work for which sufficient detail is not available to determine a definitive cost. A reasonable estimate for an assumed scope and quality is included as a placeholder. The Owner receives the savings for any amount under the allocation and is at risk for any amount over the allocation.

- **Allowance #1 – Fiber Line Relocation** – This Allowance is intended to cover costs associated with relocating the existing fiber line as to not be impacted by other improvements. Included is trenching, conduit bedding, backfill, conduit, and utility fees and coordination.
- **Allowance #2 – Fire Station Alerting System** – This Allowance is intended to cover costs associated with horns, strobes, controllers, pathways, and miscellaneous accessories associated with the Fire Station Alerting System.

ALTERNATES

Alternates are scopes of work which are NOT INCLUDED as part of the base contract work. They are carried as bid alternates so that if there is money available at the time of the GMP, they can be added to the project at the discretion of the owner.

- **Alternate #1 – Cross Street Visitor Parking** – This Alternate includes earthwork, asphalt, signage, striping, and concrete included with the proposed ADA/visitor parking lot as shown in the design documents.

SOFT COSTS

Soft Costs are scopes of work that are indirectly related to construction but are a necessary part of a project. The following soft costs are accounted for and included in this GMP. This does not represent an all-inclusive listing of all soft costs that may be required, but rather is CORE's understanding of the Soft Costs required to be included in the GMP.

- **A/E Design & Preconstruction Fees** – This scope of work includes architectural, engineering, and preconstruction costs to produce a construction set of documents, as well as provide preconstruction support through the Design Phase of the project.
- **Permits and Fees** – This is intended to cover costs associated with building permit fees for the project, and utility connection, coordination, and design fees for City of West Wendover Water. City of West Wendover electrical, communications, and gas connections are not included in this allowance. Inspections and Certificate of Occupancy costs are not included in this allowance.
- **FF&E Allowance** – This allowance is intended to cover costs associated with furniture, fixtures, and equipment not included elsewhere. The value is based on a list of items required by the City of West Wendover and a 5% additional FF&E allowance. The list of items is as follows:
    - (1) Smart Board, 65" min.
    - (3) Office Desks
    - (4) Tables, 8' x 18", folding
    - (20) office chairs, rolling.
    - Kitchen/Conference Table with seating for (8) with chairs.
    - Dayroom Furniture allowance of $15,000.

HOURLY RATES

The following agreed to hourly rates will be used to determine and define "Wages paid for Labor" as defined in Exhibit C of the Owner-CMAR Construction Agreement. The Actual Costs for each of the agreed to rates includes all normal and customary payroll paid by the Contractor plus all fringe benefits, taxes and insurances.

	Standard Rate	Overtime Rate
Project Management:		
Director of Operations	190	-
Sr. Project Manager	165	-
Project Manager	125	-
MPE/BIM Manager	125	-
Contract Administrator	92	-
Construction Coordinator	92	-
Certified Payroll	92	-
Field Operations:		
General Superintendent	165	-
Superintendent	130	-

Assumptions & Exclusions

GENERAL ASSUMPTIONS

- This GMP is considered lump sum, not line itemed. Scope values are provided for transparency and as a contract schedule of values. Any line-item cost variances will be carried across the duration of the entire project and the net savings (if any) will be split with the Owner per the terms of the contract at final completion. Costs for any individual line items are not guaranteed within this GMP, but rather the bottom-line cost of the GMP. Any cost savings from any individual line items will be offset against possible overruns of any other line items throughout the duration of the project.
- Building permits are to be procured by the Owner and in hand prior to CORE Construction mobilizing on site and Contract Time commencing. CORE shall be granted an extension of time for delays resulting from not having an approved grading / building permit in place on the anticipated start date.
- CORE Construction assumes that the soils / geotechnical report prepared by Summit Engineering is reflective of the soils to be disturbed under this project. Any adverse soil conditions including but not limited to contaminated soils, different shrink/swell factors, etc. shall be cause for a time extension and adjustment of the GMP.
- CORE will coordinate the work with the Owner's contractors and agencies, for example Wells Rural Electric, Centracom, City of West Wendover Water, City of West Wendover Sewer, etc., with their respective scopes as it pertains to this project. The Owner will provide direction related to any conflict. The project schedule has been developed assuming these contractors/agencies will be able to meet all required scheduled installation and/or utility turn-on dates and these dates will be communicated through the Owner. Any costs due to changes made by the permitting agencies after submission of the estimate are subject to change.
- Normal shrinkage cracking of all cementitious material, such as slabs, concrete walls, CMU walls, etc. is expected and shall not be cause for removal or replacement of structurally sound slabs.

- Underground utilities shown on plans are assumed to depict accurate locations of utilities. Design has been based on As-Built documents provided by the city. Discrepancies arising due to inaccurate As-Builts are not included in this GMP proposal.

SPECIFIC EXCLUSIONS

- Land acquisition costs, legal fees, and costs associated with any owner's representatives.
- 3rd party inspections and special inspections.
- Testing and inspection services of special inspectors.
- Services of a commissioning agent.
- Salvaging and relocation of any existing equipment or furnishings, unless otherwise specified.
- Fire pump and domestic water booster pump – available pressure and flow assumed adequate.
- Hard digging / caliche.
- Removal / relocation of existing storage units, equipment stored onsite – assumed by Owner.
- BIM modeling.

Scope-Specific Clarifications

CORE Construction's GMP is based upon plans and specifications as itemized in attached Enumeration of Documents, with the following Scope-Specific Assumptions and Clarifications.

GENERAL REQUIREMENTS

GEN1 – GENERAL REQUIREMENTS

- Temporary fencing, construction-use locks, public safety and project signage, construction toilets & accessories, on-site secured storage, timelapse construction camera, and site security systems are included.

GEN2 – SCAFFOLDING & EQUIPMENT

- Forklift and/or boom lift including fuel and operator expenses are included.

GEN3 – WASTE MANAGEMENT AND CLEANING

- Progressive site cleanup during construction and dumpster rental and removal fees are included.

SITE WORK (ROUGH)

008 – EARTHWORK, UTILITIES, AND PAVING

- Earthwork activities are limited by the grading shown in design documents along with the proposed swale realignment. Grading outside of these boundaries is not included.
- Gas line excavation and backfill is included. Exterior gas piping is assumed to be by utility. Utility connections and fees are not included.
- Tough digging of native soils is not included. Blasting and/or caliche excavation is specifically excluded. Test bores analyzed in the geotechnical report has been assumed to be conducive of the entire site.

SITE WORK (FINISH)

016 – LANDSCAPE

- Landscaping includes the following:
    - 8 Austrian Pines

- 14 Cleveland Flowering Pears
- 8 Lacemore Elms
- 12 Boxwoods
- 12 Karl Foerester Tall Grasses
- 16 Perennials
- Decomposed granite or gravel
- Irrigation water system including meter.

021 – PRE-FABRICATED SITE STRUCTURE

- Pre-fabricated site structures are not included.

023 – FENCING & GATES

- Trash enclosure gate is included.

025 – MASONRY

- A standard grey, 6' high CMU wall with 2" high CMU caps are included at the trash enclosure.
- CMU around generator pad is not included.
- Brick veneer around the building is not included.

STRUCTURE

036 – ROUGH CARPENTRY, EIFS, DRYWALL, AND ACT

- EIFS includes integral and shall be selected based on manufacturer's standard color palette.
- Level 4 drywall finish with light orange peel texture is included for all visible drywall spaces. Non-visible areas are to be finished as required by code.
- FRP/FRL is included for rooms 106 and 112.
- Porch dormer shall be stick framed above truss system sheathing.

ENCLOSURE

054 – OVERHEAD DOORS

- Doors included open at 60 inches per second with a springless design.

052 – GLASS AND GLAZING

- All windows within the Pre-Engineered Metal Building and the office entry door are 1" glass with aluminum frames. All windows on the office side are vinyl framed windows.

FINISHES

056 – DOORS, FRAMES, & HARDWARE

- Vision lites are included for all doors in the Apparatus Bays.

059 – CASEWORK

- Plastic laminate cabinets with stainless steel or quartz countertops are included for all spaces to receive casework.

061 – PAINT

- Painting of Pre-Engineered Metal Building structure is included. Field painting of all insulated metal panels is not included.

066 – FLUID APPLIED FLOORING

- Hermetic flooring is included for rooms 106 and 112.

067 – CONCRETE FINISHING

- Sealed concrete is included for all spaces besides restroom spaces. Polishing of any concrete is not included.

SPECIALTIES

074 – SPECIALTIES

- Bathroom specialties, corner guards, a markerboard, broom/mop holders, fire extinguisher cabinets, and window blinds are included.
- One flagpole is included.

EQUIPMENT

083 – RESIDENTIAL EQUIPMENT AND APPLIANCES

- Kitchen equipment and appliances including dishwasher, oven/stove, refrigerator, ice machine, residential washer/dryer, coffee maker, and microwave with integral vent hood are included.

089 – FIRE STATION EQUIPMENT

- Turnout gear washer/extractors, drying racks, and storage lockers are included.

MP&E SYSTEMS

098 – PLUMBING SYSTEMS

- Two (2) 1-1/2" fire truck fills are included.
- Air system includes a 150psi air compressor, 6 hose reels, 4 air outlets with black steel piping and fittings.
- Sanitary Waste & Vent System: PVC-DWV Pipe and fittings below grade, Cast Iron pipe and fittings above grade.
- Gas piping is extended to (2) gas furnaces in office/kitchen areas.

100 – HVAC

- Overhead vehicle exhaust system is not included.
- Gas furnaces are included in lieu of electric furnaces.

103 – ELECTRICAL

- Existing panels are assumed to have sufficient capacity and sufficient space for new breakers for the new service. Modifications to existing switch gear due to additional equipment not described above or within the design documents is not included.
- Average Daily Traffic (ADT) for N Gene L. Jones Way is assumed to be lower than the MUTCD signal warrant requirements. Accordingly, "Emergency Vehicle Approaching" flashers and signage, along with all associated work, is not included.
- All premiums for lighting are not included.

UNIQUE SCOPES OF WORK

109 – PRE-ENGINEERED METAL BUILDING

- Building interior shall have exposed framing, girts, and insulated metal panel backs. Insulated metal panels shall have the factory primer/paint on the interior and exterior.
- Colors for all metal panels shall be selected from a manufacturer standard color palette.

END OF BASIS OF GMP

3.
Schedule

WEST WENDOVER FIRE STATION - Full Schedule

ID	Task Name	Duration	Start	Finish
1	**WEST WENDOVER FIRE STATION**	**859 days**	**Wed 10/20/21**	**Mon 3/10/25**
2	**Preconstruction Phase**	**594 days**	**Wed 10/20/21**	**Thu 2/22/24**
3	**Project Award**	**141 days**	**Wed 10/20/21**	**Tue 5/10/22**
4	City Council Approval / Notice of Award	10 days	Wed 10/20/21	Tue 11/2/21
5	Reciept of Executed Contract	130 days	Wed 11/3/21	Mon 5/9/22
6	Reciept of Notice to Proceed	1 day	Tue 5/10/22	Tue 5/10/22
7	**Programming Phase**	**83 days**	**Wed 5/25/22**	**Wed 9/21/22**
8	OAC Mtg - Kick Off	1 day	Wed 5/25/22	Wed 5/25/22
9	Programming Questionaire	6 days	Tue 5/31/22	Tue 6/7/22
10	OAC Mtg - Programming Questionaire Rev	1 day	Wed 6/8/22	Wed 6/8/22
11	Programming /Adjacency Diagram Develop	53 days	Thu 6/9/22	Tue 8/23/22
12	OAC Mtg - Programming/Adj Diagram Pres	1 day	Wed 8/24/22	Wed 8/24/22
13	CWW Adjacency Diagram Rvw/Comment	19 days	Thu 8/25/22	Wed 9/21/22
14	*OAC Mtg - CWW Comment Review/Approv*	*0 days*	*Wed 9/21/22*	*Wed 9/21/22*
15	**Schematic Design Phase (Phase 1A)**	**110 days**	**Thu 9/22/22**	**Tue 2/28/23**
16	SD Development/Incorp Rvw Comments	10 days	Thu 9/22/22	Wed 10/5/22
17	OAC Mtg - Schematic Design Status Review	1 day	Thu 10/6/22	Thu 10/6/22
18	Schematic Design Development	10 days	Fri 10/7/22	Thu 10/20/22
19	OAC Mtg - Schematic Design Status Review	1 day	Fri 10/21/22	Fri 10/21/22
20	Schematic Design Development	5 days	Mon 10/24/22	Fri 10/28/22
21	Submit SD Progress Set to CORE for Pricing	1 day	Mon 10/31/22	Mon 10/31/22
22	Schematic Design Development Continued	5 days	Mon 10/31/22	Fri 11/4/22
23	OAC Mtg - Schematic Design Status	1 day	Mon 11/7/22	Mon 11/7/22
24	Schematic Design Development	10 days	Tue 11/8/22	Mon 11/21/22
25	CORE Prelim SD Pricing w/Trade Partners	15 days	Tue 11/1/22	Mon 11/21/22
26	OAC Mtg - SD Estimate Presentation	1 day	Tue 11/22/22	Tue 11/22/22
27	CWW - SD Submittal Review	51 days	Wed 11/23/22	Tue 2/7/23
28	USDA - SD Submittal Review	51 days	Wed 11/23/22	Tue 2/7/23
29	OAC Mtg - CWW/USDA SD Approval	1 day	Tue 2/28/23	Tue 2/28/23
30	**Design Development Phase (Phase 1B)**	**162 days**	**Tue 2/28/23**	**Mon 10/16/23**
31	*Receive NTP for Phase 1B Services*	*0 days*	*Tue 2/28/23*	*Tue 2/28/23*
32	*Prepare/Receive Ph 1B Contract Amendme*	*0 days*	*Tue 2/28/23*	*Tue 2/28/23*
33	*OAC Mtg - Phase 1B Kick Off Mtg*	*0 days*	*Mon 3/6/23*	*Mon 3/6/23*
34	Design Development	21 days	Tue 3/7/23	Tue 4/4/23
35	OAC Mtg - Design Development Review	1 day	Wed 4/5/23	Wed 4/5/23
36	Design Development Cont.	19 days	Thu 4/6/23	Tue 5/2/23
37	OAC Mtg. Review DD progress	1 day	Wed 4/19/23	Wed 4/19/23

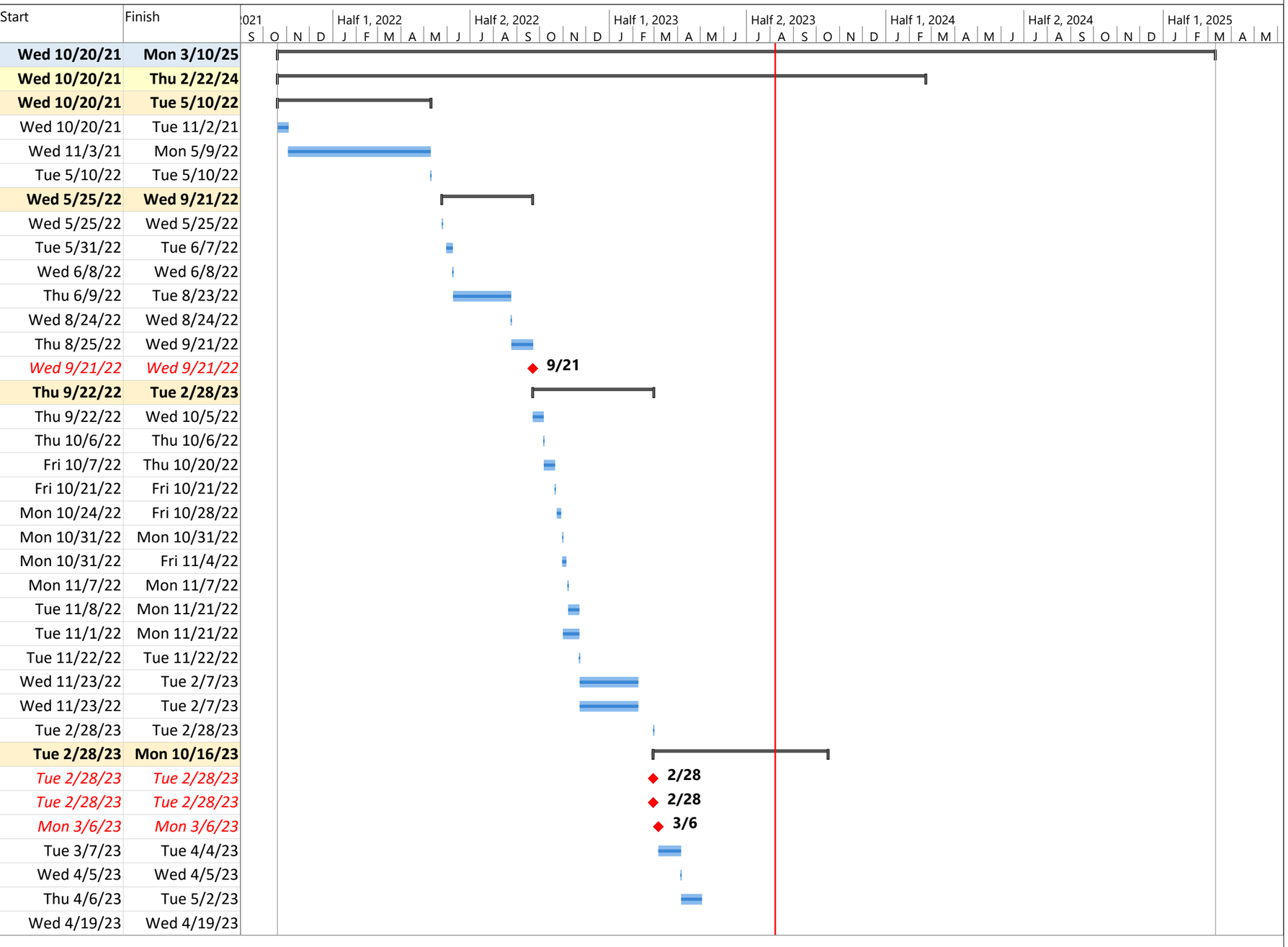

Task | Milestone | Summary | Project Summary | Deadline | Critical | Progress

WEST WENDOVER FIRE STATION - Full Schedule

ID	Task Name	Duration	Start	Finish
38	OAC Mtg - Design Development Presentati	1 day	Wed 5/3/23	Wed 5/3/23
39	PEMB Design	38 days	Thu 5/18/23	Wed 7/12/23
40	CWW Design Development Review	10 days	Thu 5/4/23	Wed 5/17/23
41	OAC Mtg - City Comment Review	1 day	Wed 5/17/23	Wed 5/17/23
42	**GMP Bidding, Review, and Proposal Subm**	**34 days**	**Thu 5/25/23**	**Thu 7/13/23**
43	Release RFP	1 day	Thu 5/25/23	Thu 5/25/23
44	Site Visit	1 day	Tue 6/6/23	Tue 6/6/23
45	RFIs Due	1 day	Fri 6/9/23	Fri 6/9/23
46	*Bids Due*	*0 days*	*Thu 6/22/23*	*Thu 6/22/23*
47	Descope Interview	5 days	Mon 6/26/23	Fri 6/30/23
48	Proposal Review & GMP Prep.	13 days	Mon 6/26/23	Thu 7/13/23
49	*Pre-GMP Review*	*0 days*	*Thu 7/13/23*	*Thu 7/13/23*
50	*OAC Mtg Phase 1B GMP Submittal*	*0 days*	*Fri 7/14/23*	*Fri 7/14/23*
51	CWW Initial Comments	7 days	Mon 7/17/23	Tue 7/25/23
52	Incorporate City Comments	8 days	Wed 7/26/23	Fri 8/4/23
53	*Re-submit Phase 1B Proposal*	*0 days*	*Mon 8/7/23*	*Mon 8/7/23*
54	CWW Phase 1B Submittal Review	50 days	Mon 8/7/23	Mon 10/16/23
55	USDA Phase 1B Submittal Review	50 days	Mon 8/7/23	Mon 10/16/23
56	*OAC Mtg - CWW/USDA Phase 1B Approval*	*0 days*	*Mon 10/16/23*	*Mon 10/16/23*
57	**Construction Document Phase (Phase 2 Fina**	**62 days**	**Mon 10/16/23**	**Tue 1/16/24**
58	*Receive NTP for Phase 2 Services*	*0 days*	*Mon 10/16/23*	*Mon 10/16/23*
59	Prep/Receive Ph2 Contract Amendment	30 days	Tue 10/17/23	Wed 11/29/23
60	OAC Mtg Phase 2 Kick-Off	1 day	Tue 10/17/23	Tue 10/17/23
61	OAC Mtg - Con Doc Status Review	1 day	Thu 11/30/23	Thu 11/30/23
62	100%CD Docs Development	35 days	Tue 10/17/23	Wed 12/6/23
63	OAC Mtg CD Package Presentation	1 day	Thu 12/7/23	Thu 12/7/23
64	CWW CD Review	10 days	Fri 12/8/23	Thu 12/21/23
65	OAC CWW CD Package Comment Review	1 day	Fri 12/22/23	Fri 12/22/23
66	Const Doc Adjustments	4 days	Tue 12/26/23	Fri 12/29/23
67	OAC Mtg - CD Pkg Presentation	1 day	Tue 1/2/24	Tue 1/2/24
68	CWW Review of CD Pkg	5 days	Wed 1/3/24	Tue 1/9/24
69	USDA Review of CD Package	10 days	Wed 1/3/24	Tue 1/16/24
70	*CWW USDA Construction Doc Approval*	*0 days*	*Tue 1/16/24*	*Tue 1/16/24*
71	**Plan Check Review Process**	**37 days**	**Wed 1/3/24**	**Thu 2/22/24**
72	Plan Check Review Submittal	1 day	Wed 1/3/24	Wed 1/3/24
73	Building Department Plan Check Review	15 days	Thu 1/4/24	Wed 1/24/24
74	Fire Marshall Review Process	15 days	Thu 1/4/24	Wed 1/24/24

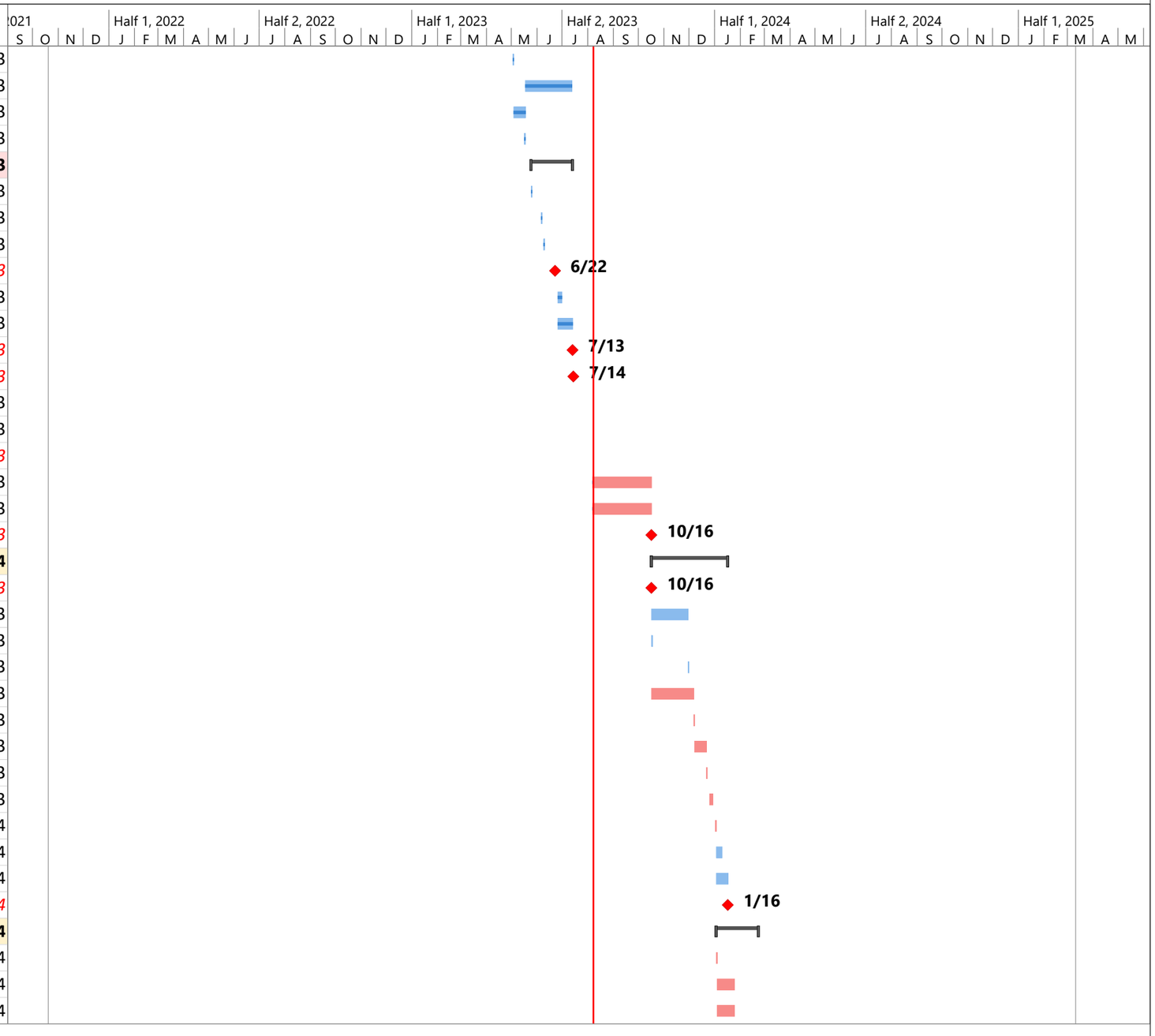

Task Milestone Summary Project Summary Deadline Critical Progress

WEST WENDOVER FIRE STATION - Full Schedule

ID	Task Name	Duration	Start	Finish
75	Receive Building Department Review Comı	1 day	Thu 1/25/24	Thu 1/25/24
76	Receive Fire Marshall Review Comments	1 day	Thu 1/25/24	Thu 1/25/24
77	Address Plan Check Review Comments	10 days	Fri 1/26/24	Thu 2/8/24
78	Address Fire Marshall Review Comments	10 days	Fri 1/26/24	Thu 2/8/24
79	Review Comment Revision Approvals	10 days	Fri 2/9/24	Thu 2/22/24
80	*Plan Check Review Approval*	*0 days*	*Thu 2/22/24*	*Thu 2/22/24*
81	**Construction Phase**	**354 days**	**Mon 10/16/23**	**Mon 3/10/25**
82	**Administrative**	**119 days**	**Mon 10/16/23**	**Thu 4/4/24**
83	*Receive Admin NTP to Procure Materials*	*0 days*	*Mon 10/16/23*	*Mon 10/16/23*
84	Execute Subcontracts	5 days	Tue 10/17/23	Mon 10/23/23
85	Delay Start - Winter	25 days	Fri 2/23/24	Thu 3/28/24
86	*Begin Mobilization*	*0 days*	*Thu 3/28/24*	*Thu 3/28/24*
87	Mobilize Onsite	5 days	Fri 3/29/24	Thu 4/4/24
88	**Procurement**	**237 days**	**Tue 10/24/23**	**Fri 9/27/24**
89	**Procure Submittals**	**97 days**	**Tue 10/24/23**	**Tue 3/12/24**
109	**Procure Deferred Submittals**	**40 days**	**Wed 1/17/24**	**Tue 3/12/24**
113	**Submittal Review**	**112 days**	**Tue 10/31/23**	**Tue 4/9/24**
133	**Review Deferred Submittals**	**15 days**	**Wed 3/13/24**	**Tue 4/2/24**
137	**Procure Materials**	**222 days**	**Tue 11/14/23**	**Fri 9/27/24**
159	**Off-Site Construction**	**36 days**	**Fri 4/5/24**	**Fri 5/24/24**
165	**Rough Site Construction**	**92 days**	**Fri 4/5/24**	**Wed 8/14/24**
179	**Building Construction**	**203 days**	**Tue 4/23/24**	**Mon 2/10/25**
180	**Structure**	**121 days**	**Tue 4/23/24**	**Fri 10/11/24**
195	**Interior - Office**	**82 days**	**Fri 7/12/24**	**Tue 11/5/24**
214	**Enclosure - Office**	**30 days**	**Fri 7/19/24**	**Thu 8/29/24**
223	**Interior - App Bay**	**82 days**	**Mon 10/14/24**	**Mon 2/10/25**
242	**Building Systems**	**55 days**	**Mon 11/18/24**	**Thu 2/6/25**
251	**Finish Site Construction**	**60 days**	**Thu 8/15/24**	**Thu 11/7/24**
263	*Substantial Completion*	*0 days*	*Mon 2/10/25*	*Mon 2/10/25*
264	Complete Punch List	10 days	Tue 2/11/25	Mon 2/24/25
265	Contractual Close Out	20 days	Tue 2/11/25	Mon 3/10/25
266	*Final Completion*	*0 days*	*Mon 3/10/25*	*Mon 3/10/25*

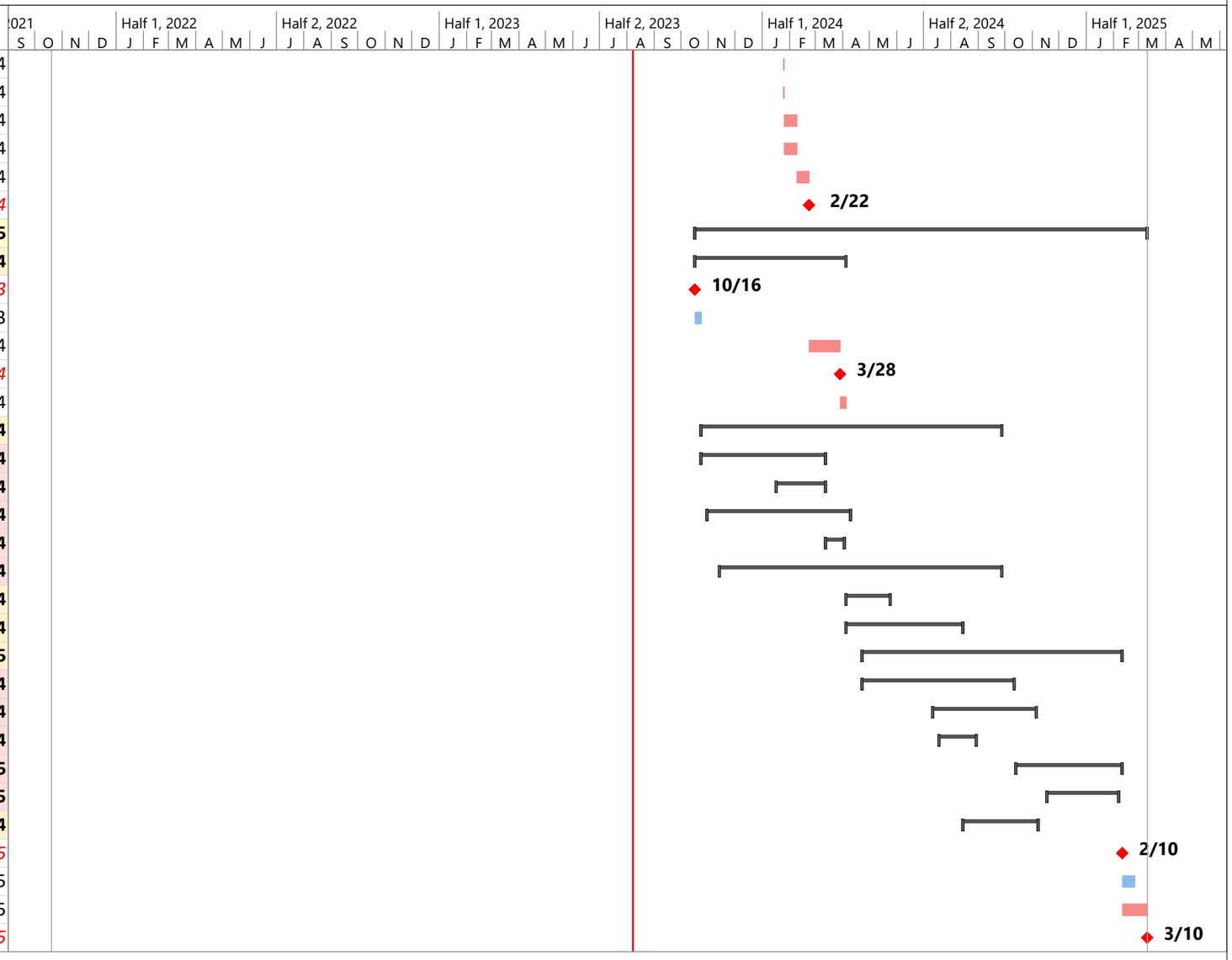

Task | Milestone | Summary | Project Summary | Deadline | Critical | Progress

4.
Design Documents

WEST WENDOVER NEW FS #13

PHASE-1B DESIGN DEVELOPMENT

MAY 3, 2023

PROJECT ADDRESS:

N. GENE L. JONES WAY, WEST WENDOVER, NV 89883



CLIENT:

CITY OF WEST WENDOVER

1111 N. GENE L. JONES WAY
WEST WENDOVER, NV 89883

DESIGN TEAM

DESIGN-BUILDER
CORE WEST, INC.
7150 CASCADE VALLEY COURT
LAS VEGAS, NV 89128
702.794.0550

ARCHITECT
TSK ARCHITECTS
314 SOUTH WATER STREET
SUITE 100, HENDERSON, NV 89015
702.456.3000

CIVIL ENGINEER
SUMMIT ENGINEERING
1150 LAMOILE HIGHWAY
ELKO, NV 89801
775.738.8058

LANDSCAPE ARCHITECT

STRUCTURAL ENGINEER
KIMLEY-HORN
111 EAST BROADWAY
SUITE 600, SALT LAKE CITY, UT 84111
385.212.3176

MECHANICAL ENGINEER
KIMLEY-HORN
5370 KIETZKE LANE
SUITE 100, RENO, NV 89511
775.636.7835

PLUMBING ENGINEER
KIMLEY-HORN
5370 KIETZKE LANE
SUITE 100, RENO, NV 89511
775.636.7835

ELECTRICAL ENGINEER
KIMLEY-HORN
7900 RANCHARRAH PARKWAY
SUITE 100, RENO, NV 89511
775.200.1970

tsk
314 South Water Street,
Suite 100
Henderson, NV 89015
phone: 702.456.3000
fax: 702.898.6209
www.tska.com

THESE DRAWINGS AND SPECIFICATIONS ARE THE PROPERTY OF TATE SNYDER KIMSEY ARCHITECTS AND MAY NOT BE REPRODUCED OR USED FOR ANY PURPOSE WITHOUT THE ARCHITECTS WRITTEN CONSENT. AS INSTRUMENTS OF SERVICE, THESE DOCUMENTS ARE NOT FINAL AND READY FOR USE, AND THEREFORE NOT VALID, UNLESS THEY ARE SEALED, SIGNED AND DATED.

Copyright, Ltd 2023

Consultant

PLEASE RECYCLE

Project
WEST WENDOVER NEW FS #13

N. GENE L. JONES WAY, WEST WENDOVER, NV 89883

Job No: 22-002.00

Owner
CITY OF WEST WENDOVER

PHASE-1B DESIGN DEVELOPMENT
MAY 3, 2023

ABBREVIATIONS

A		E.P.	Electrical Panelboard	LKR.	Locker		
A.D.	Area Drain	E.P.D.M.	Single Ply Roof Membrane	LT.	Light	S	
A.V.	Audio/Visual	E.W.C.	Electric Water Cooler			S.	South
ACC.	Accessible	EA.	Each	M		S.C.	Solid Core
ACOUS.	Acoustical	ELEC.	Electrical	M.C.	Medicine Cabinet	S.C.D.	Seat Cover Dispenser
ADJ.	Adjustible	ELEV.	Elevation	M.O.	Masonry Opening	S.D.	Soap Dispenser
AGGR.	Aggregate	EMER.	Emergency	MAX.	Maximum	S.N.D.	Sanitary Napkin Dispensr
AL.	Aluminum	ENCL.	Enclosure	MECH.	Mechanical	S.SK.	Service Sink
APPROX.	Approximate	EQ.	Equal	MEMB.	Membrane	SCHED.	Schedule
ARCH	Architectural	EQUIP.	Equipment	MFGR.	Manufacturer	SECT.	Section
ASPH.	Asphalt	EXIST.	Existing Exposed	MH.	Manhole	SH.	Shelf
		EXP.	Expansion	MIN.	Minimum	SHR.	Shower
B		EXT.	Exterior	MIR.	Mirror	SHT.	Sheet
B.O.F.	Bottom of Fixture			MISC.	Miscellaneous	SIM.	Similar
BD.	Board	F		MTD.	Mounted	SPEC.	Specification
BITUM.	Bituminous	F.A.	Fire Alarm	MTL.	Metal	SQ.	Square
BLDG.	Building	F.B.	Flat Bar	MUL.	Mullion	SST.	Stainless Steel
BLK.	Block	F.D.	Floor Drain			STA.	Station
BLKG.	Blocking	F.E.	Fire Extinguisher	N		STD.	Standard
BM.	Beam	F.E.C.	Fire Extinguisher Cabinet	N.	North	STL.	Steel
BOT.	Bottom	F.H.C.	Fire Hose Cabinet	N.I.C.	Not in Contract	STO.	Storage
		F.O.C.	Face of Concrete	N.T.S.	Not to Scale	STRL.	Structural
C		F.O.F.	Face of Finish	NO. OR #	Number	SUSP.	Suspended
C.B.	Catch Basin	F.O.S.	Face of Stud	NOM.	Nominal	SYM.	Symmetrical
C.F.C.I.	Contractor Furnished Contractor Installed	F.S.	Full Size	O		T	
C.F.O.I.	Contractor Furnished Owner Installed	FDN.	Fountain	O.A.	Overall	T.&G.	Tongue and Groove
C.G.	Corner Guard	FIN.	Finish	O.C.	On Center	T.B.	Towel Bar
C.I.	Cast Iron	FLASH.	Flashing	O.D.	Outside Diameter (Dim.)	T.C.	Top of Curb
C.J.	Control Joint	FLOUR.	Flourescent	O.F.C.I.	Owner Furnished Contractor Installed	T.O.W.	Top of Wall
C.M.U.	Concrete Masonry Unit	FLR.	Floor	O.F.O.I.	Owner Furnished Owner Installed	T.P.	Top of Pavement
CAB.	Cabinet	FPRF.	Fireproof	O.H.	Opposite Hand	T.P.D.	Toilet Paper Dispenser
CEM.	Cement	FT.	Foot or Feet	O.R.D.	Overflow Roof Drain	T.V.	Television
CER.	Ceramic	FTG.	Footing	OBS.	Obscure	TEL.	Telephone
CLG.	Ceiling	FURR.	Furring	OFF.	Office	TER.	Terazzo
CLKG.	Caulking	FUT.	Future	OPNG.	Opening	THK.	Thick
CLO.	Closet			OPP.	Opposite	TRD.	Tread
CLR.	Clear	G				TYP.	Typical
CNTR.	Counter	G.B.	Grab Bar	P			
COL.	Column	G.F.R.C.	Glass Fiber Reinforced Concrete	P.LAM.	Plastic Laminate	U	
CONC.	Concrete	GA.	Guage	P.T.D.	Paper Towel Dispenser	U.N.O.	Unless Noted Otherwise
CONN.	Connection	GALV.	Galvanized	P.T.D./R.	Combination Paper Towel Dispencer and Receptacle	UNF.	Unfinished
CONST.	Construction	GL.	Glass			UR.	Urinal
CONT.	Continuous	GND.	Ground	P.T.R.	Paper Towel Receptacle	V	
CORR.	Corridor	GR.	Grade	PL.	Plate	V.B.	Vapor Barriers
CPT.	Carpet	GYP.	Gypsum	PLAS.	Plaster	V.C.G.	Vinyl Corner Guard
CT.	Ceramic Tile			PLYWD	Plywood	V.T.	Vinyl Tile
CTR.	Center	H		PR.	Pair	VAR.	Varies
CTSK.	Countersunk	H.B.	Hose Bibb	PRCST.	Pre-cast	VERT.	Vertical
		H.M.	Hollow Metal	PT.	Point	VEST.	Vestibule
D		HDWD.	Hardwood	PTN.	Partition		
D.F.	Drinking Fountain	HDWE.	Hardware			W	
D.O.	Door Opening	HGT.	Height	Q		W.	West
D.S.P.	Dry Standpipe	HORIZ.	Horizontal	Q.T.	Quarry Tile	W.C.	Water Closet
DBL.	Double	HR.	Hour			W/	With
DEPT.	Department	I		R		W/O	Without
DET.	Detail	I.D.	Inside Diameter (Dim.)	R.	Riser	WD.	Wood
DIA.	Diameter	INSUL.	Insulation	R.D.	Roof Drain	WK.P.	Working Point
DIM.	Dimension	INT.	Interior	R.O.	Rough Opening	WP.	Waterproof
DISP.	Dispenser	J		R.W.L.	Rain Water Leader	WSCT.	Wainscot
DN.	Down	JAN.	Janitor	RAD.	Radius	WT.	Weight
DR.	Door	JT.	Joint	REF.	Reference		
DS.	Downspout	K		REFR.	Refrigerator		
DWG.	Drawing	KIT.	Kitchen	REINF.	Reinforce		
DWR.	Drawer	L		REQD	Required		
E		LAB.	Laboratory	RESIL.	Resilient		
(E)	Existing	LAM.	Laminate	RGTR.	Register		
E.	East	LAV.	Lavatory	RM.	Room		
E.I.F.S.	Exterior Insulation Finish System			RRM	Restroom		
E.J.	Expansion Joint			RWD	Redwood		

SYMBOL LEGEND

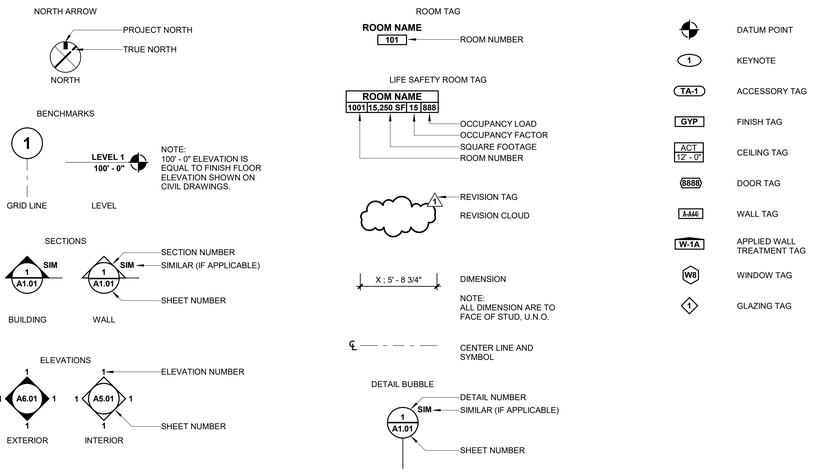

MATERIALS LEGEND

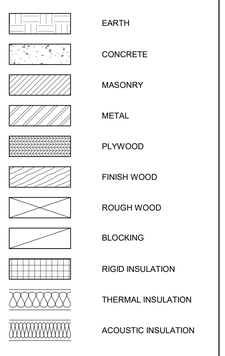

VICINITY MAP

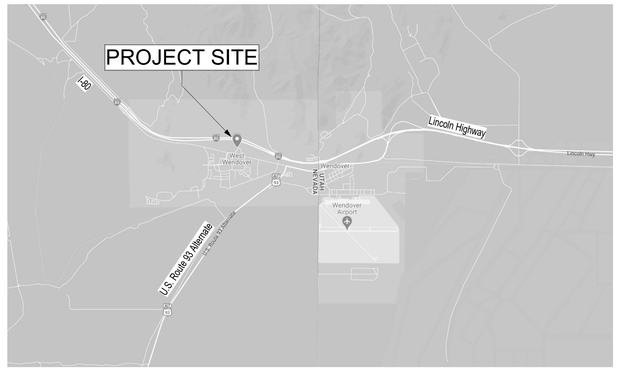

CODE ANALYSIS

CITY OF WEST WENDOVER - ADOPTED BUILDING CODES

- 2018 Edition of the International Building Code (IBC), together with Appendix Chapters C, E, I, and J.
- 2018 Edition of the International Residential Code (IRC), together with Appendix Chapters A, B, C, G, H, J, K, and M.
- 2018 Edition of the International Fire Code (IFC), together with all appendices.
- 2018 Edition of the International Existing Building Code (IEBC).
- 2018 Edition of the International Energy Conservation Code (IECC), Commercial and Residential Provisions chapter 1 through 5.
- 2018 Edition of the Uniform Plumbing Code (UPC), together with Appendix Chapters A, B, C, D, E, G, I, J, K and L.
- 2018 Edition of the Uniform Mechanical Code (UMC), together with Appendix Chapters A, B and C *Only when IMC is silent.
- 2018 International Mechanical Code (IMC), together with Appendix Chapters A and B.
- 2018 International Fuel Gas Code (IFGC), together with Appendix Chapters A, B, C and D.
- 2018 Edition of the International Wildland-Urban Interface Code, chapter 5.
- 2017 Edition of the National Electrical Code (NEC).
- National Fire Protection Association standards, editions as adopted by the State of Nevada.
- Suggested 2018 Design Criteria:
  1. Roof Snow Load - See Table 1608.2.1 from 2018 Northern Nevada Code Amendments
  2. Wind Speed (mph) - Exposure "C"
     a. IRC: I 00 mph
     b. IBC Basic Design Wind Speed:
        Risk Category I: 95 mph — Risk Category III: 110 mph
        Risk Category II: 105 mph — Risk Category IV: 115 mph
  3. Seismic Design Category:
     a. IRC: 02 b. IBC: D
  4. Frost Depth: 24 inches minimum
  5. Winter Design Temperature: 10° F
  6. Ice Shield Underlayment Required: Yes > 5,300 ft elevation
  7. Flood Hazards: per current FEMA flood maps
  8. Air Freezing Index: 594
  9. Mean Annual Temperature: 49.4° F
  10. Subject to Damage From:
      a. Weathering: Severe — c. Decay: None/Slight
      b. Termite: Moderate/Heavy

APN: 010-740-900

ZONING
Land use: 400 / Land zoning: M

FEMA
Flood Zone: AO

Additional Applicable Codes:
- **ICC/ANSI** 117.1 - 2009
- **ADA** 2010
- **NORTHERN NEVADA AMENDMENTS 2018**
- **NAC** - 477

Occupancy Classifications:
- S-2 Occupancy (Section 311.3) - Main occupancy
- B Occupancy (Section 304.1) - Accessory to "S-2" Occupancy, per section 508.2
  No occupancy separation required, per section 508.2.4

Fire Sprinklers Provided: **Yes - Installed in accordance with Section 903.3.1.1**

- Construction Type: **Type V-B**
- Allowable Height: 3 Story (Table 504.4) / 60'(Table 504.3)
- Actual Height: **28'- 0" / 1 Story**
- Allowable Area factor: 54,000 (S-2 Occupancy) (Table 506.2)
- Frontage increase (If): 75% (Section 506)
- Allowable Area with Increase: Aa = At + (NS x If) --> [54,000+ [13,500 x 0.75]] = 64,125 sf
- Actual Area: 11,457 SF

Required separation of occupancies: **No Separation Required (Table 508.4)**

Fire Resistance Rating Requirements: **(Table 601)**

- Structural Frame: 0-hr
- Bearing Exterior Walls: 0-hr
- Bearing Interior Walls: 0-hr
- Non-Bearing Exterior Walls: 0-hr
- Non-Bearing Interior Walls: 0-hr
- Floor: 0-hr
- Roof: 0-hr

Maximun area of exterior wall openings: No Limit
(Table 705.8)

Means of Egress

- Spaces with One Exit: (Table 1006.2.1)
  Occupant count up to and including **29** allowed on 1 exit for "S" occupancy with maximun common path of egress **100 ft.**, and **49** allowed on 1 exit for "B" occupancy with maximun common patch of **100 ft.**
- Exit access travel distace: (Table 1017.2)
  S-2: 400 ft.
  B: 300 ft.
- Corridor fire-resistance rating (Table 1020.1)
  S: 0-hr
  B: 0-hr

Total occupant load: (Table 1004.5 and sheet AE1.01 with the Life Safety Plan)
S-2: 52 occupants
B: 29 occupants

IECC – 2018 (International Energy Conservation Code)
Nevada is Climate **Zone 5B** (Elko County)

Table C402.1.3 – Building Envelope Minimum Requirements (Opaque Assemblies)

Item:	Required:	Provided:
Roof (Continuous above Deck)	R-30ci	R-30
Mass Walls (Framed)	R-11.4ci	N/A
Wood Framed Walls	R-13 + R-3.8ci or R-20	R-20
Slab on Grade Floors	R-10 for 24" below	R-12
Opaque Doors (non-swinging)	R-4.75	R- 4.75

Table C402.4 – Building Envelope Requirements: Fenestration

Fixed Fenestration	U- 0.38
Operable Fenestration	U- 0.45
Entrance Doors	U- 0.77
Over Head Door	U- 0.77
SHGC	SEW: 0.38 N: 0.51

Section C402.5 – Air Leakage (Mandatory)
Continuous Air Barrier is required

Section: C402.5.1 – Air Barriers
A continuous air barrier is required and must comply with C402.5.1.2.1
Roof: Extruded polystyrene insulation board ½" thick min.
Foil-back polyisocyanurate insulation board having a thickness of not less than ½".
Fully adhered single-ply roof membrane.
Walls: Exterior or Interior gypsum board having a thickness of not less than ½".
Portland cement/sand parge, or gypsum plaster having a thickness of not less than 5/8".

Plumbing Fixtures Count

Section 2902 The number of fixtures shall be determined by this code,
(Based on Table 2902.1 requirements). see Calculations below.

Table 2902.1 **Minimum Number of Required Plumbing Fixtures**

	OCCUPANCY	WATER CLOSETS M	WATER CLOSETS F	LAVATORIES M	LAVATORIES F	BATHTUBS OR SHOWERS	DRINKING FOUNTAINS	SERVICE SINK
FIXTURE REQUIREMENTS	GROUP S-2	1 per 100		1 per 100		-	1 per 1000	
	52 OCCUPANTS	26	26	18	18	n/a	0.05	1
		0.26	0.26	0.26	0.26			
	GROUP B	Table 2902.1, Row No. 2		Table 2902.1, Row No. 3		-	1 per 100	
	29 OCCUPANTS	14.5	14.5	14.5	14.5	n/a	0.29	1
		0.58	0.58	0.36	0.36			
	REQUIRED:	2	2	2	2	0	1	2
	PROVIDED:	2	2	2	2	0	1	2

DRAWING INDEX

#	SHEET NAME	1B DD (05.04.2023)	100% DD (DATE)	50% CD (DATE)	100% CD (DATE)
00_COVER SHEET					
0.0	COVER SHEET	■			
01_GENERAL					
G0.00	GENERAL SHEET	■			
G1.01	GENERAL ACCESSIBILITY DETAILS	■			
G1.02	GENERAL ACCESSIBILITY DETAILS	■			
G1.03	GENERAL ACCESSIBILITY DETAILS	■			
AE1.01	LIFE SAFETY PLAN	■			
AE2.01	LIFE SAFETY DETAILS	■			
02_CIVIL					
C-1	TITLE SHEET	■			
C-2	GENERAL NOTES SHEET	■			
C-3	SITE PLAN	■			
C-4	GRADING PLAN	■			
C-5	UTILITY PLAN	■			
C-6	PARKING & PAVING PLAN	■			
C-7	DETAIL SHEET	■			
03_LANDSCAPE					
L0.00					
04_ARCHITECTURAL SITE					
AS1.01	OVERALL SITE PLAN	■			
AS1.11	ARCHITECTURAL SITE PLAN (ENLARGED)				
AS2.01	ARCHITECTURAL SITE DETAILS	■			
05_ARCHITECTURAL					
A1.01	OVERALL FLOOR PLAN	■			
A1.11	DIMENSION PLAN	■			
A1.21	ENLARGED PLANS AND ELEVATIONS	■			
A1.22	ENLARGED PLANS AND ELEVATIONS	■			
A1.31	FINISH PLAN	■			
A1.41	FURNITURE PLAN				
A2.01	BUILDING MATERIAL SCHEDULES & ROOM FINISH SCHEDULE	■			
A2.11	DOOR SCHEDULE, PANEL AND FRAME TYPES	■			
A2.15	DOOR DETAILS				
A2.21	WINDOW TYPES	■			
A2.25	WINDOW DETAILS				
A2.31	PARTITION TYPES	■			
A2.35	PARTITION DETAILS				
A2.41	INTERIOR PLAN DETAILS				
A2.51	SIGNAGE PLAN				
A2.55	SIGNAGE SCHEDULE, SIGNAGE TYPES & DETAILS				
A3.01	REFLECTED CEILING PLAN	■			
A3.11	CEILING DETAILS				
A4.01	OVERALL ROOF PLAN	■			
A4.11	ROOF PLAN (1/8")				
A4.21	ROOF DETAILS				
A5.01	INTERIOR ELEVATIONS	■			
A5.02	INTERIOR ELEVATIONS	■			
A5.11	INTERIOR ELEVATION DETAILS				
A6.01	EXTERIOR ELEVATIONS	■			
A6.02	EXTERIOR ELEVATIONS	■			
A6.11	EXTERIOR ELEVATION DETAILS				
A7.01	BUILDING SECTIONS	■			
A7.11	WALL SECTIONS	■			
A7.21	SECTION DETAILS				
A8.01	CASEWORK PLAN AND ELEVATIONS				
A8.11	CASEWORK SECTIONS AND DETAILS				
A9.01	MISCELLANEOUS DETAILS				
06_STRUCTURAL					
S1.01	STRUCTURAL GENERAL NOTES	■			
S1.02	DESIGN LOADS	■			
S1.03	ABBREVIATIONS AND SCHEDULES	■			
S1.10	FOUNDATION PLAN	■			
S1.11	SLAB-ON-GRADE PLAN	■			
S1.20	ROOF FRAMING PLAN	■			
S2.01	ELEVATIONS	■			
S5.01	FOUNDATION DETAILS	■			
S5.02	FOUNDATION DETAILS	■			
S5.03	FOUNDATION DETAILS	■			
S5.04	FOUNDATION DETAILS	■			
S5.11	SLAB-ON-GRADE DETAILS	■			
S5.12	SLAB-ON-GRADE DETAILS	■			
S5.21	WOOD DETAILS	■			
S5.22	WOOD DETAILS	■			
S5.23	WOOD DETAILS	■			
S5.24	WOOD DETAILS	■			
S5.26	WOOD DETAILS	■			
08_MECHANICAL					
M0.00	MECHANICAL SYMBOLS, ABBREVIATIONS, AND NOTES	■			
M0.02	MECHANICAL SCHEDULES	■			
M2.00	MECHANICAL FLOOR PLAN	■			
M6.00	MECHANICAL DETAILS	■			
09_PLUMBING					
P0.00	PLUMBING SYMBOLS, ABBREVIATIONS, AND NOTES	■			
P0.02	PLUMBING SCHEDULES	■			
P2.00	PLUMBING FLOOR PLAN - WASTE AND VENT	■			
P2.01	PLUMBING FLOOR PLAN - WATER	■			
P6.00	PLUMBING DETAILS	■			
10_ELECTRICAL					
E0.00	ELECTRICAL SYMBOLS, ABBREVIATIONS, AND NOTES	■			
E0.01	ELECTRICAL SPECIFICATIONS	■			
E1.00	SITE ELECTRICAL PLAN	■			
E2.01	POWER PLAN	■			
E2.02	LIGHTING PLAN	■			
E6.00	SINGLE LINE DIAGRAM	■			
E6.01	PANEL SCHEDULES	■			
E6.02	ELECTRICAL DETAILS	■			
E6.03	ELECTRICAL DETAILS	■			
11_FIRE ALARM					
F0.00	FIRE ALARM RISER DIAGRAM	■			
F1.01	FIRE ALARM PLAN	■			

GENERAL NOTES

1. ALL CONSTRUCTION SHALL CONFORM TO THE AMERICANS WITH DISABILITIES ACT (ADA), LOCAL GOVERNING FIRE, SAFETY, AND BUILDING CODES, REQUIREMENTS AND REGULATIONS, 2018 IBC, ANSI A117.1 -2009.
2. ALL DIMENSIONS ARE TO THE FACE OF CONCRETE OR MASONRY, FACE OF STUD WALLS, OR CENTERLINE OF COLUMNS UNLESS NOTED OTHERWISE.
3. COORDINATE ALL DISCIPLINES AND ALL ASPECTS OF WORK. CONFLICTS AND DISCREPANCIES SHALL BE BROUGHT TO THE ATTENTION OF THE ARCHITECT IMMEDIATELY.
4. ALL FINISH ELEVATIONS ARE TO TOP OF WALKS, GRADE, PAVING, WALLS, ROOFS, AND SLABS ETC., UNLESS NOTED OTHERWISE
5. ALL SOIL BERMS SHALL BE CONSTRUCTED TO DRAIN AWAY FROM VERTICAL SURFACES
6. ALL GROUND PREPARATION SHALL BE IN CONFORMANCE WITH THE RECOMMENDATIONS OF THE GEOTECHNICAL REPORT. THE CONTRACTOR SHALL BE RESPONSIBLE TO OBTAIN A COPY OF THIS REPORT. ALL RECOMMENDATIONS AND REQUIREMENTS CONTAINED WITHIN THE SOILS REPORT ARE TO BE FOLLOWED UNLESS SPECIFICALLY NOTED OTHERWISE IN THE DRAWINGS OR TECHNICAL SPECIFICATIONS
7. ALL CONCRETE SURFACES WHICH RECEIVE A SPECIAL FINISH, FLOOR COVERING, COATINGS, HARDENERS, ETC. SHALL BE CONSTRUCTED IN ACCORDANCE WITH THE SPECIFIC FINISH MANUFACTURER'S SPECIFICATIONS AND INSTRUCTIONS. PRIOR TO APPLICATION OF A SPECIAL FINISH, A WRITTEN ACCEPTANCE OF THE SURFACE SHALL BE SUBMITTED TO THE ARCHITECT BY THE GENERAL CONTRACTOR
8. SLOPE ALL CONCRETE SURFACES ADJACENT TO THE BUILDING AWAY FROM THE BUILDING
9. ALL CONCRETE SURFACES UPON WHICH PEDESTRIANS CAN WALK SHALL BE FINISHED SUCH THAT THE MINIMUM STATIC COEFFICIENT OF SLIDING FRICTION BETWEEN THE SURFACE AND NORMAL HARD-SOLED SHOES = 0.60 AND 0.80 FOR RAMPS
10. ALL CONCRETE AND MASONRY CONNECTIONS AND JOINTS SHALL BE COMPLETELY SEALED AND WATERPROOFED WITH BACKER ROD AND SEALANT AS RECOMMENDED AND SPECIFIED BY EACH SPECIFIC APPLICATION
11. ALL EXPANSION JOINTS IN CONCRETE FLOORS SHALL BE COMPLETELY CAULKED AND SEALED
12. CONTRACTOR SHALL COORDINATE ALL CONCRETE SLABS TO SLOPE AWAY FROM BUILDING, TO SLOPE TOWARD DRAINS, ETC., IN ACCORDANCE WITH THE ARCHITECTURAL AND STRUCTURAL DRAWINGS
13. ALL CONCRETE BLOCK SURFACES ADJACENT TO SOIL BERMS AND PLANTERS SHALL BE PROVIDED WITH A MONOLITHIC WATERPROOF SYSTEM EXTENDING FROM TOP OF FOOTING TO 2" ABOVE SOIL
14. ALL PLANTER AND RETAINING WALLS SHALL BE CONSTRUCTED WITH 3/4" DIAMETER PVC WEEP HOLES AT 6'-0" O.C. MAXIMUM
15. ALL EXPOSED WELDS SHALL BE GROUND SMOOTH AND FINISHED WITH NO PITS FOR ARCHITECTURAL APPEARANCE
16. ALL EXPOSED METAL SURFACES THAT ARE NOT PREFINISHED ARE TO BE PAINTED
17. PROVIDE METAL STRAPPING AND ANCHORAGE FOR CEILING AND WALL MOUNTED EQUIPMENT
18. ALL SHEET METAL FLASHINGS ARE TO BE IN ACCORDANCE WITH ARCHITECTURAL SHEET METAL MANUAL AS PRODUCED BY SHEET METAL AND AIR CONDITIONING CONTRACTORS NATIONAL ASSOCIATION (SMACNA)
19. PROVIDE SEPARATION AND/OR APPROPRIATE COATING BETWEEN ALL DISSIMILAR METALS. ALL TRANSITIONS BETWEEN SIMILAR OR DISSIMILAR MATERIALS, EQUIPMENT, ACCESSORIES, ETC. SHALL BE CAULKED AND/OR SEALED AS REQUIRED
20. CONTRACTOR SHALL FIELD VERIFY DIMENSIONALLY ALL OPENINGS PRIOR TO MANUFACTURING WINDOW AND DOOR FRAMES
21. ALL DOOR AND FRAME ASSEMBLIES AND INSTALLATIONS SHALL BE IN STRICT ACCORDANCE WITH UNIFORM LIFE SAFETY CODES GOVERNING EDITION. ALL EXTERIOR DOORS SHALL BE COMPLETE WITH PROPER THRESHOLDS, ASTRAGALS, WEATHERSTRIPPING, HOLDS AND DOOR BOTTOMS
22. ALL FIRE EXTINGUISHER FINISH ELEVATIONS ARE TO TOP OF WALKS, GRADE, PAVING, WALLS, ROOFS, ETC., UNLESS NOTED OTHERWISE. LOCATIONS TO BE FINALIZED BY THE STATE FIRE MARSHAL. LOCATIONS SHOWN ON THE DRAWINGS ARE FOR REFERENCE ONLY
23. COATINGS MUST COMPLY WITH ALL LOCAL AND FEDERAL LAWS GOVERNING VOLATILE ORGANIC COMPOUNDS, AND ALL ENVIRONMENTAL PROTECTION AGENCY RECOMMENDATIONS
24. CONTRACTOR SHALL NOT SCALE ANY DRAWING IN THIS BID SET
25. THE AUTOMATIC FIRE SPRINKLER DRAWINGS, THE HYDRAULIC CALCULATIONS AND THE MATERIAL SPECIFICATIONS SHALL BE SUBMITTED TO THE STATE OF NEVADA, OFFICE OF THE STATE FIRE MARSHAL BY A LICENSED FIRE SPRINKLER CONTRACTOR FOR REVIEW PRIOR TO INSTALLATION
26. THE FIRE ALARM DRAWINGS AND MATERIAL SPECIFICATIONS SHALL BE SUBMITTED TO THE STATE OF NEVADA OFFICE OF THE STATE FIRE MARSHAL BY A LICENSED CONTRACTOR FOR REVIEW PRIOR TO INSTALLATION. "... THESE DEFERRED SUBMITTAL ITEMS SHALL BE SUBMITTED TO THE REGISTERED DESIGN PROFESSIONAL IN RESPONSIBLE CHARGE WHO SHALL REVIEW THEM AND FORWARD THEM TO THE BUILDING OFFICIAL WITH A NOTATION INDICATING THAT THE DEFERRED SUBMITTAL DOCUMENTS HAVE BEEN REVIEWED AND THAT THEY HAVE BEEN FOUND TO BE IN GENERAL CONFORMANCE WITH THE DESIGN OF THE BUILDING. THE DEFERRED SUBMITTAL ITEMS SHALL NOT BE INSTALLED UNTIL THEIR DESIGN AND SUBMITTAL DOCUMENTS HAVE BEEN APPROVED BY THE BUILDING OFFICIAL..." SEE MECHANICAL, ELECTRICAL, PLUMBING AND STRUCTURAL FOR ADDITIONAL DEFERRED SUBMITTAL REQUIREMENTS
27. CONTRACTOR IS RESPONSIBLE FOR COORDINATING THE LOCATION OF THE ACCESS DOORS FOR PLUMBING VALVES, CLEAN OUTS, WATER HAMMER ARRESTORS ETC. TO ENSURE SERVICEABILITY OF THE EQUIPMENT. ALL ACCESS DOORS LOCATED ON WALLS SHALL BE PAINTED TO MATCH WALL. ALL ACCESS PANELS LOCATED IN CEILINGS SHALL BE PAINTED TO MATCH CEILING. ALL ACCESS DOORS EASILY ACCESSIBLE TO THE PUBLIC SHALL BE LOCKABLE. PROVIDE A CYLINDER LOCK WITH LATCH AND TWO KEYS FOR EACH DOOR
28. ALL NOTES, DETAILS, SPECIFICATIONS, AND OTHER PROVISIONS INCLUDED IN THESE CONTRACT DOCUMENTS, WHETHER CROSS REFERENCE OR NOT, ARE PART OF THIS PROJECT. ALL WORK SHOWN HEREIN SHALL BE PERFORMED WITHOUT EXCEPTION

tsk
314 South Water Street,
Suite 100
Henderson, NV 89015
phone: 702.456.3000
fax: 702.898.6209
www.tska.com

THESE DRAWINGS AND SPECIFICATIONS ARE THE PROPERTY OF TATE SNYDER KIMSEY ARCHITECTS AND MAY NOT BE REPRODUCED OR USED FOR ANY PURPOSE WITHOUT THE ARCHITECTS WRITTEN CONSENT. AS INSTRUMENTS OF SERVICE, THESE DOCUMENTS ARE NOT FINAL AND READY FOR USE, AND THEREFORE NOT VALID, UNLESS THEY ARE SEALED, SIGNED AND DATED.

Copyright, Ltd 2023

Consultant

PLEASE RECYCLE

Project
WEST WENDOVER NEW FS #13

N. GENE L. JONES WAY, WEST WENDOVER, NV 89883

Job No: 22-002.00

Owner
CITY OF WEST WENDOVER

PHASE-1B DESIGN DEVELOPMENT

REVISIONS		
REV	DATE	DESCRIPTION

Sheet Title
GENERAL SHEET

Date: MAY 3, 2023
Sheet No:
G0.00

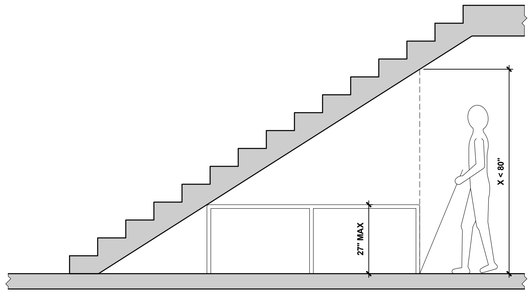

20 REDUCED VERTICAL CLEARANCE
SCALE: 1/2" = 1'-0"

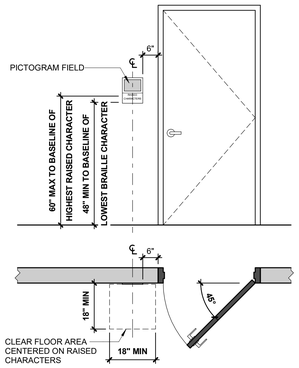

12 LOCATION OF SIGNS AT DOORS
SCALE: 1/2" = 1'-0"

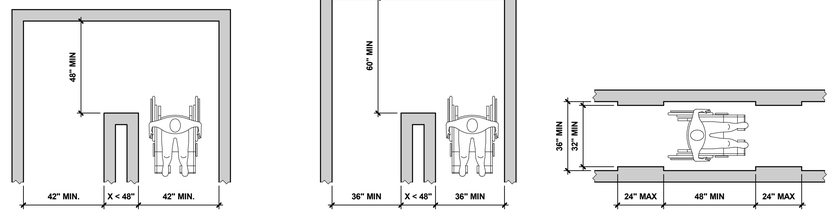

8 CLEAR WIDTH OF AN ACCESSIBLE ROUTE AND CLEAR WIDTH AT TURN
SCALE: 3/8" = 1'-0"

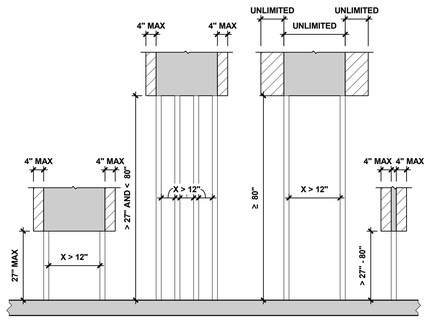

19 POST MOUNTED PROTRUDING OBJECTS
SCALE: 1/2" = 1'-0"

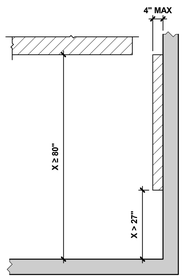

15 LIMITS OF PROTRUDING OBJECTS
SCALE: 1/2" = 1'-0"

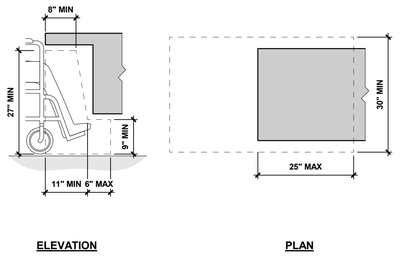

11 KNEE AND TOE CLEARANCE
SCALE: 3/4" = 1'-0"

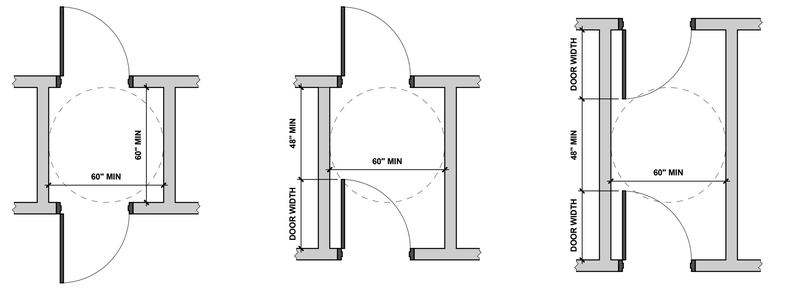

7 MANEUVERING CLEARANCE AT TWO DOORS IN SERIES
SCALE: 3/8" = 1'-0"

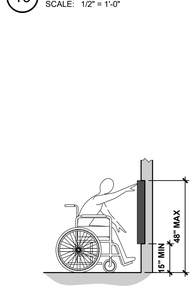

FORWARD REACH UNOBSTRUCTED

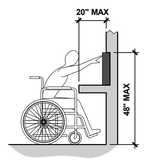

HIGH FORWARD REACH OBSTRUCTED (A)

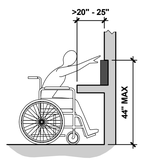

HIGH FORWARD REACH OBSTRUCTED (B)

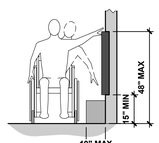

SIDE REACH UNOBSTRUCTED

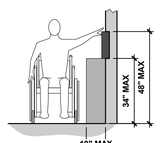

HIGH SIDE REACH OBSTRUCTED (A)

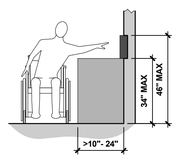

HIGH SIDE REACH OBSTRUCTED (B)

18 REACH RANGES
SCALE: 3/8" = 1'-0"

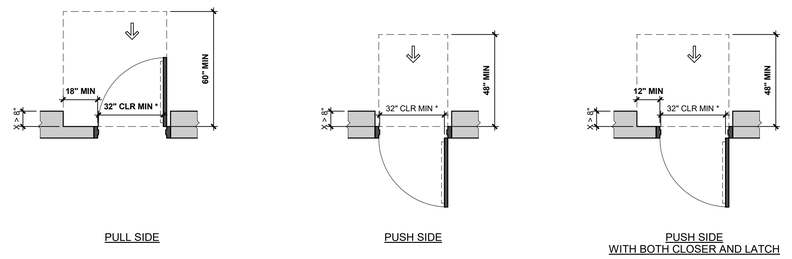

NOTES:
* CLEAR WIDTH SHALL COMPLY WITH LOCAL CODE AMENDMENT REQUIREMENTS

6 MANEUVERING CLEARANCE AT RECESSED DOORS
SCALE: 3/8" = 1'-0"

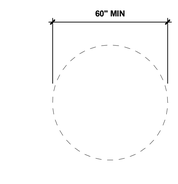

TURNING SPACE CIRCULAR

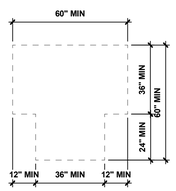

TURNING SPACE T-SHAPED

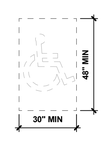

CLEAR FLOOR SPACE FOR WHEELCHAIR

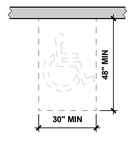

CLEAR FLOOR SPACE FORWARD APPROACH

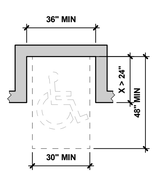

CLEAR FLOOR SPACE FORWARD APPROACH IN ALCOVE

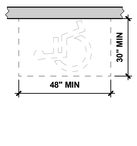

CLEAR FLOOR SPACE SIDE APPROACH

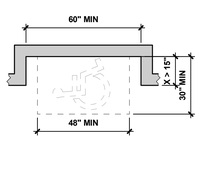

CLEAR FLOOR SPACE SIDE APPROACH IN ALCOVE

17 WHEELCHAIR TURNING SPACE
SCALE: 3/8" = 1'-0"

13 WHEELCHAIR CLEAR FLOOR SPACE
SCALE: 3/8" = 1'-0"

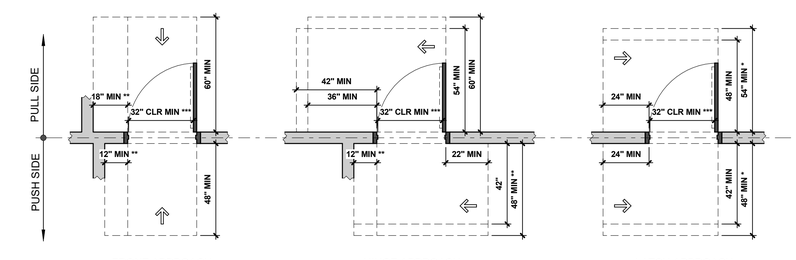

FRONT APPROACH

HINGE APPROACH

LATCH APPROACH

NOTES:
* IF CLOSER IS PROVIDED
** IF BOTH LATCH AND CLOSER ARE PROVIDED
*** CLEAR WIDTH SHALL COMPLY WITH LOCAL CODE AMENDMENT REQUIREMENTS

5 MANEUVERING CLEARANCE AT DOORS
SCALE: 3/8" = 1'-0"

tsk
314 South Water Street,
Suite 100
Henderson, NV 89015
phone: 702.456.3000
fax: 702.898.6209
www.tska.com

THESE DRAWINGS AND SPECIFICATIONS ARE THE PROPERTY OF TATE SNYDER KIMSEY ARCHITECTS AND MAY NOT BE REPRODUCED OR USED FOR ANY PURPOSE WITHOUT THE ARCHITECTS WRITTEN CONSENT. AS INSTRUMENTS OF SERVICE, THESE DOCUMENTS ARE NOT FINAL AND READY FOR USE, AND THEREFORE NOT VALID, UNLESS THEY ARE SEALED, SIGNED AND DATED.
Copyright, Ltd 2023

Consultant

PLEASE RECYCLE

Project
WEST WENDOVER NEW FS #13

N. GENE L. JONES WAY, WEST WENDOVER, NV 89883

Job No: 22-002.00

Owner
CITY OF WEST WENDOVER

PHASE-1B DESIGN DEVELOPMENT

REVISIONS		
REV	DATE	DESCRIPTION

Sheet Title
GENERAL ACCESSIBILITY DETAILS

Date: MAY 3, 2023
Sheet No:
G1.01

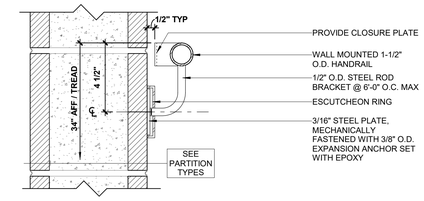

GENERAL NOTES:
1. ALL WELDS TO BE CONTINUOUS AND GROUND SMOOTH

12 WALL MOUNTED HANDRAIL - CMU WALL
SCALE: 3" = 1'-0"

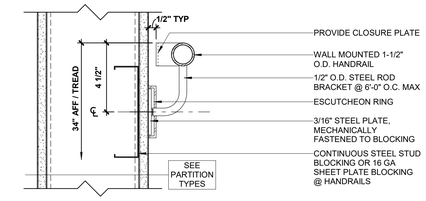

GENERAL NOTES:
1. ALL WELDS TO BE CONTINUOUS AND GROUND SMOOTH

8 WALL MOUNTED HANDRAIL - STUD WALL
SCALE: 3" = 1'-0"

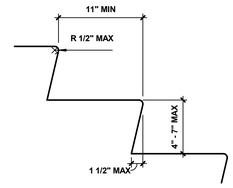

GENERAL NOTES:
1. ALL STEPS ON A FLIGHT OF STAIRS SHALL HAVE UNIFORM RISER HEIGHTS AND TREAD DEPTH
2. THE LEADING 2" OF TREAD SHALL HAVE VISUAL CONTRAST OF DARK-ON-LIGHT OR LIGHT-ON-DARK FROM THE REMAINDER OF THE TREAD

4 TREAD AND RISERS
SCALE: 1 1/2" = 1'-0"

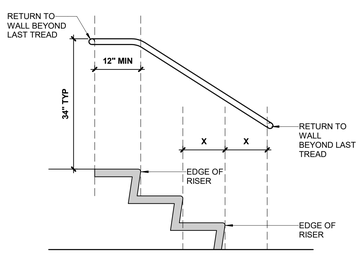

HANDRAIL EXTENSION AT STAIRS

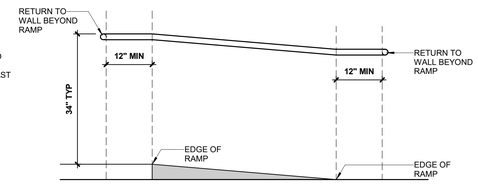

HANDRAIL EXTENSION AT RAMP

11 HANDRAIL EXTENSIONS
SCALE: 3/4" = 1'-0"

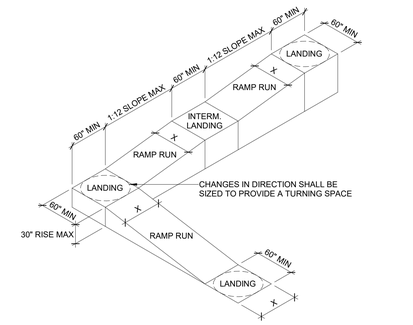

RAMP WITH TURNING PLATFORM

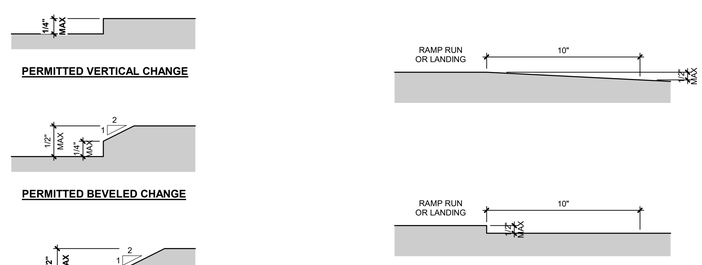

GENERAL NOTE:
1. EDGE PROTECTION SHALL NOT BE REQUIRED ON RAMPS OR LANDINGS HAVING A VERTICAL DROP-OFF OF 1/2" MAX WITHIN 10" HORIZONTALLY OF THE MINIMUM RAMP OR LANDING AREA.

10 CHANGES IN LEVEL
SCALE: 12" = 1'-0"

6 RAMP EDGE PROTECTION EXCEPTION
SCALE: 3" = 1'-0"

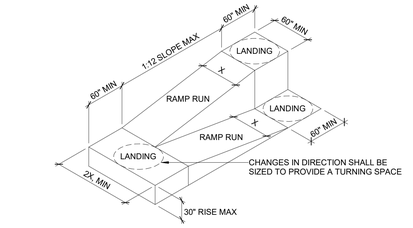

RAMP WITH INTERMEDIATE SWITCH-BACK PLATFORM

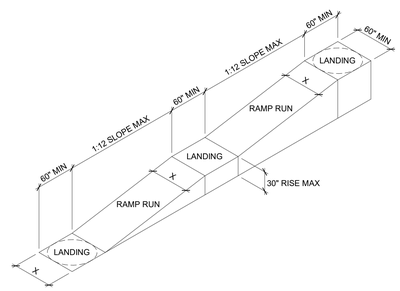

STRAIGHT RAMP

GENERAL NOTES:
1. ACCESSIBLE ROUTE WIDTH (SHOWN AS "X"), SHALL BE 36" MINIMUM
2. WHEN DOOR SWINGS ONTO LANDING, THE DOOR SWING SHALL NOT OVERLAP TURNING SPACE
3. RAMP RUNS WITH A RISE HIGHER THAN 6" SHALL HAVE HANDRAILS
4. EDGE PROTECTION SHALL BE PROVIDED ON EACH SIDE OF RAMP RUN AND LANDING

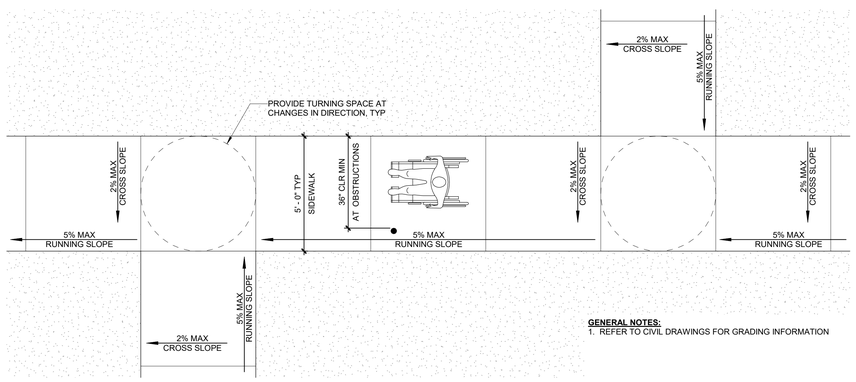

GENERAL NOTES:
1. REFER TO CIVIL DRAWINGS FOR GRADING INFORMATION

17 ACCESSIBLE ROUTE ON SITE
SCALE: 3/8" = 1'-0"

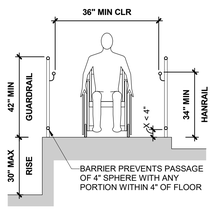

BARRIER EDGE PROTECTION

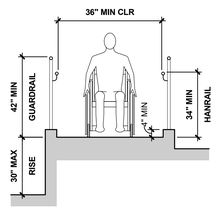

CURB EDGE PROTECTION

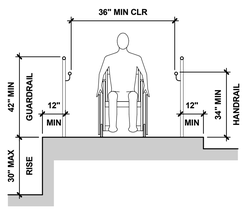

EXTENDED SURFACE EDGE PROTECTION

9 RAMP EDGE PROTECTION
SCALE: 3/8" = 1'-0"

1 RAMP DETAILS
SCALE: 1/8" = 1'-0"

tsk
314 South Water Street,
Suite 100
Henderson, NV 89015
phone: 702.456.3000
fax: 702.898.6209
www.tska.com

THESE DRAWINGS AND SPECIFICATIONS ARE THE PROPERTY OF TATE SNYDER KIMSEY ARCHITECTS AND MAY NOT BE REPRODUCED OR USED FOR ANY PURPOSE WITHOUT THE ARCHITECTS WRITTEN CONSENT. AS INSTRUMENTS OF SERVICE, THESE DOCUMENTS ARE NOT FINAL AND READY FOR USE, AND THEREFORE NOT VALID, UNLESS THEY ARE SEALED, SIGNED AND DATED.

Copyright, Ltd 2023

Consultant

PLEASE RECYCLE

Project
WEST WENDOVER NEW FS #13

N. GENE L. JONES WAY, WEST WENDOVER, NV 89883

Job No: 22-002.00

Owner
CITY OF WEST WENDOVER

PHASE-1B DESIGN DEVELOPMENT

REVISIONS		
REV	DATE	DESCRIPTION

Sheet Title
GENERAL ACCESSIBILITY DETAILS

Date: MAY 3, 2023
Sheet No:
G1.02

DESIGN CRITERIA FOR ACCESSIBLE RESTROOMS

NOTE:
ALL HEIGHT DIMENSIONS ARE TO THE HIGHEST OPERATING CONTROL, INCLUDING COIN SLOT.
THIS INCLUDES ALL ACCESSORIES.

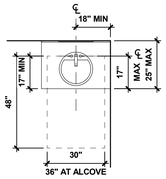

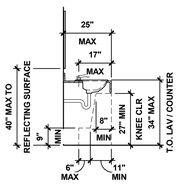

LAVATORY

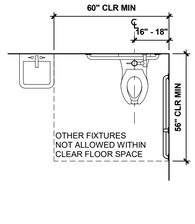

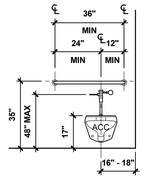

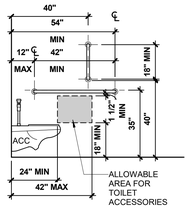

TOILET

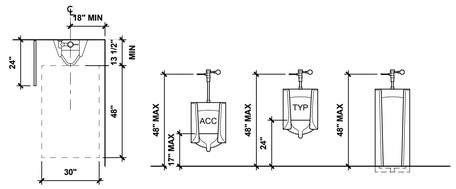

URINAL

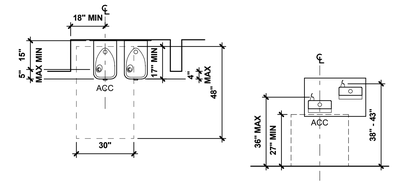

DRINKING FOUNTAIN

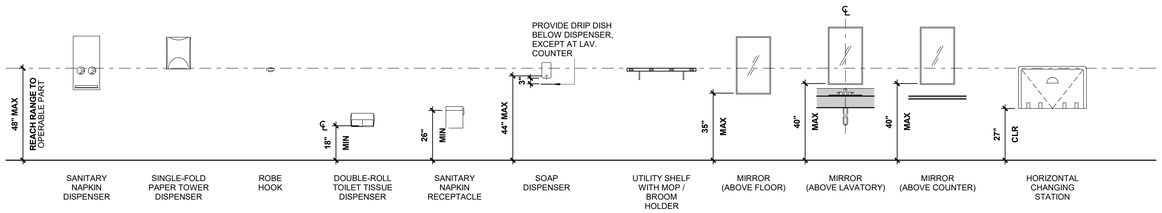

RESTROOM ACCESSORIES (ADULT)

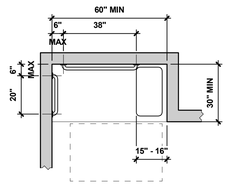

PLAN VIEW

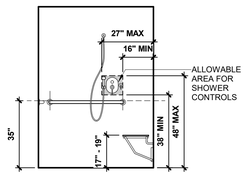

FRONT ELEVATION

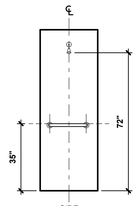

SIDE ELEVATION

STANDARD ROLL-IN-TYPE SHOWER COMPARTMENT

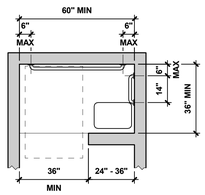

PLAN VIEW

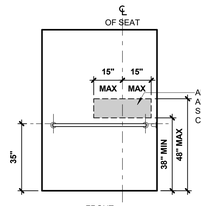

FRONT ELEVATION

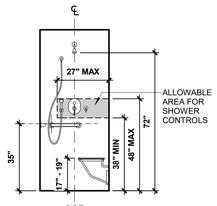

SIDE ELEVATION

ALTERNATE ROLL-IN-TYPE SHOWER COMPARTMENT

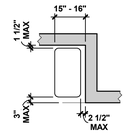

SHOWER COMPARTMENT SEAT

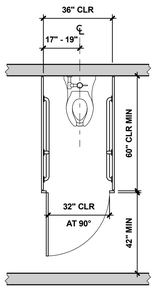

AMBULATORY STALL

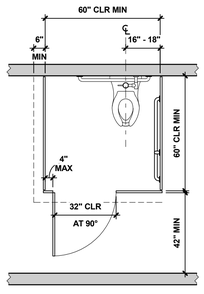

ACCESSIBLE STALL

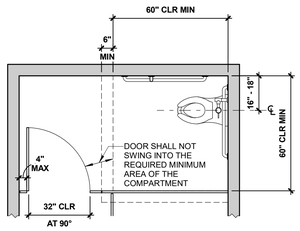

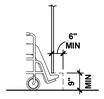

TOE CLEARANCE

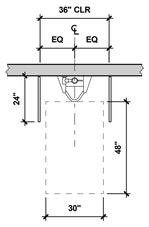

URINAL

18 TYPICAL FIXTURE AND ACCESSORY ELEVATIONS

SCALE: 3/8" = 1'-0"

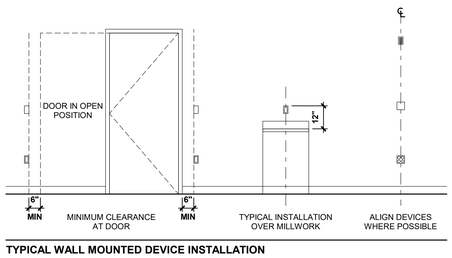

TYPICAL WALL MOUNTED DEVICE INSTALLATION

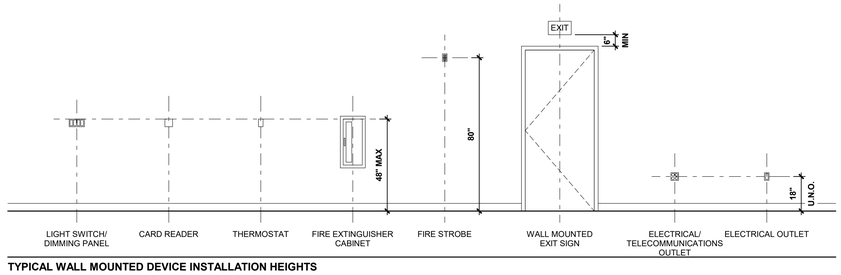

TYPICAL WALL MOUNTED DEVICE INSTALLATION HEIGHTS

17 WALL MOUNTED DEVICES - TYPICAL MOUNTING HEIGHTS

SCALE: 3/8" = 1'-0"

tsk
314 South Water Street,
Suite 100
Henderson, NV 89015
phone: 702.456.3000
fax: 702.898.6209
www.tska.com

THESE DRAWINGS AND SPECIFICATIONS ARE THE PROPERTY OF TATE SNYDER KIMSEY ARCHITECTS AND MAY NOT BE REPRODUCED OR USED FOR ANY PURPOSE WITHOUT THE ARCHITECTS WRITTEN CONSENT. AS INSTRUMENTS OF SERVICE, THESE DOCUMENTS ARE NOT FINAL AND READY FOR USE, AND THEREFORE NOT VALID, UNLESS THEY ARE SEALED, SIGNED AND DATED.

Copyright, Ltd 2023

Consultant

PLEASE RECYCLE

Project

WEST WENDOVER NEW FS #13

N. GENE L. JONES WAY, WEST WENDOVER, NV 89883

Job No: 22-002.00

Owner

CITY OF WEST WENDOVER

PHASE-1B DESIGN DEVELOPMENT

REVISIONS		
REV	DATE	DESCRIPTION

Sheet Title

GENERAL ACCESSIBILITY DETAILS

Date: MAY 3, 2023

Sheet No:

G1.03

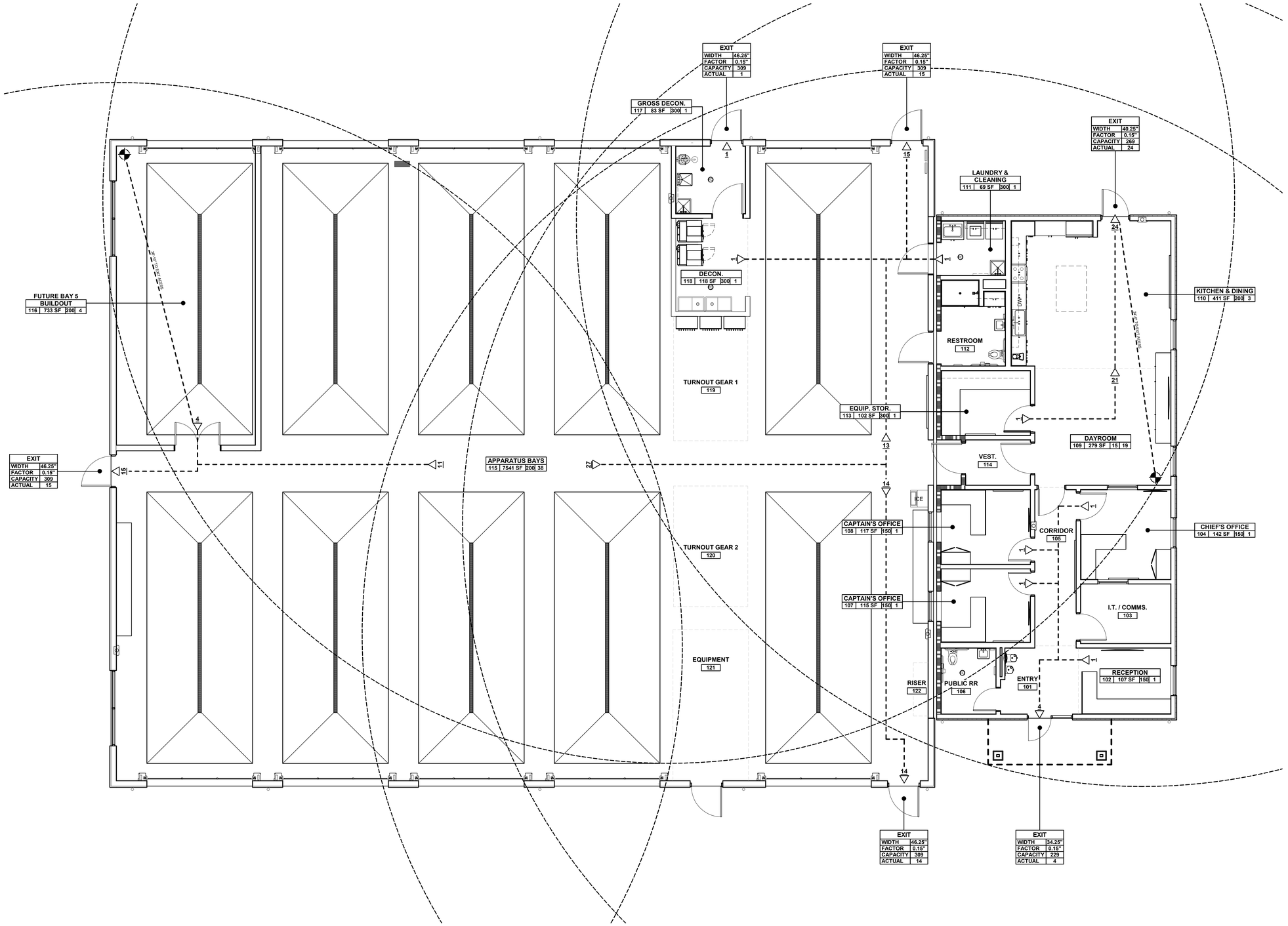

1 LIFE SAFETY PLAN
SCALE: 3/16" = 1'-0"

NORTH 0' 3' 5' 11'

GENERAL NOTES

1. PER 2018 IBC SECTION 703.7: FIRE WALLS, FIRE BARRIERS, FIRE PARTITIONS, SMOKE BARRIERS, AND SMOKE PARTITIONS OR ANY OTHER WALL REQUIRED TO HAVE PROTECTED OPENINGS OR PENETRATIONS SHALL BE EFFECTIVELY AND PERMANENTLY IDENTIFIED WITH SIGNS OR STENCILING. SUCH IDENTIFICATION SHALL: (1) BE LOCATED IN ACCESSIBLE CONCEALED FLOOR, FLOOR-CEILING, OR ATTIC SPACES; (2) BE LOCATED WITHIN 15' OF THE END OF EACH WALL AND AT INTERVALS NOT EXCEEDING 30' MEASURED HORIZONTALLY ALONG THE WALL OR PARTITION; AND (3) INCLUDE LETTERING NOT LESS THAN 3" IN HEIGHT WITH A MINIMUM 3/8" STROKE IN A CONTRASTING COLOR INCORPORATING THE SUGGESTED WORDING: "FIRE AND/OR SMOKE BARRIER - PROTECT ALL OPENINGS" OR OTHER WORDING
2. FOR CLARITY PURPOSES; HALLWAYS, RESTROOMS, ACCESSORY SPACES, AND ALL OTHER SPACES WITH NO OCCUPANT LOAD ARE NOT LABELED.
3. ELECTRICAL ROOMS TO HAVE 1HR FIRE RATED WALLS, UNLESS NOTED OTHERWISE.
4. BUILDING IS FULLY SPRINKLERED, AND HAS AUDIBLE AND VISUAL FIRE ALARM SYSTEM THROUGHOUT.

KEYNOTES

LEGEND

ROOM NAME
1001 15,250 SF 15 888
- ROOM NAME
- OCCUPANT LOAD
- OCCUPANT LOAD FACTOR
- AREA
- ROOM NUMBER

1 HR RATED PARTITION
2 HR RATED PARTITION
PATH OF EGRESS TO EXIS DISCHARGE
POINT AT WHICH 2 EXIT PATHS BECOME AVAILABLE
42 EXIT DIRECTION AND NUMBER OF OCCUPANTS
MOST REMOTE POINT FOR TRAVEL DISTANCE
FIRE EXTINGUISHER CABINET. SEE LIFE SAFETY DETAILS AE2.XX
X OCCUPANCY
X OCCUPANCY
X OCCUPANCY

tsk
314 South Water Street,
Suite 100
Henderson, NV 89015
phone: 702.456.3000
fax: 702.898.6209
www.tska.com

THESE DRAWINGS AND SPECIFICATIONS ARE THE PROPERTY OF TATE SNYDER KIMSEY ARCHITECTS AND MAY NOT BE REPRODUCED OR USED FOR ANY PURPOSE WITHOUT THE ARCHITECTS WRITTEN CONSENT. AS INSTRUMENTS OF SERVICE, THESE DOCUMENTS ARE NOT FINAL AND READY FOR USE, AND THEREFORE NOT VALID, UNLESS THEY ARE SEALED, SIGNED AND DATED.
Copyright, Ltd 2023

Consultant

PLEASE RECYCLE

Project
WEST WENDOVER NEW FS #13

N. GENE L. JONES WAY, WEST WENDOVER, NV 89883

Job No: 22-002.00

Owner
CITY OF WEST WENDOVER

PHASE-1B DESIGN DEVELOPMENT

REVISIONS		
REV	DATE	DESCRIPTION

Sheet Title
LIFE SAFETY PLAN

Date: MAY 3, 2023
Sheet No:
AE1.01

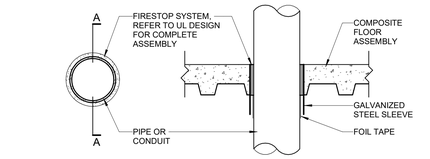

SECTION A-A

UL DESIGN NO.: F-A-2201
ASSEMBLY RATING: (2 HOUR)

12 FIRESTOP SYSTEMS (2 HOUR)
SCALE: 1 1/2" = 1'-0"

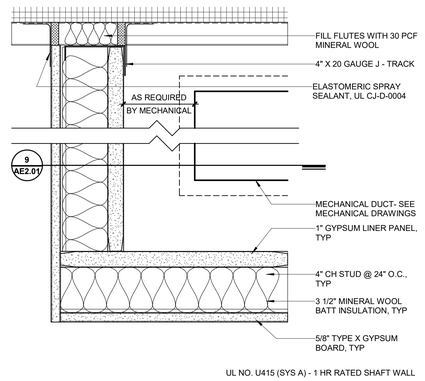

UL NO. U415 (SYS A) - 1 HR RATED SHAFT WALL

8 1HR RATED DUCT ENCLOSURE SECTION
SCALE: 3" = 1'-0"

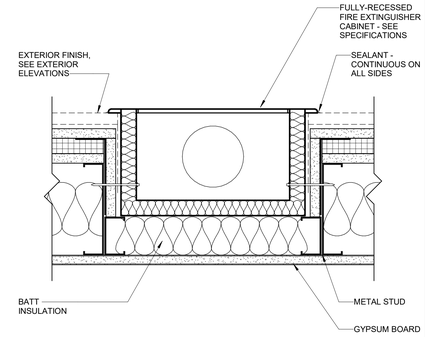

4 FULLY RECESSED FEC - EXTERIOR WALL
SCALE: 3" = 1'-0"

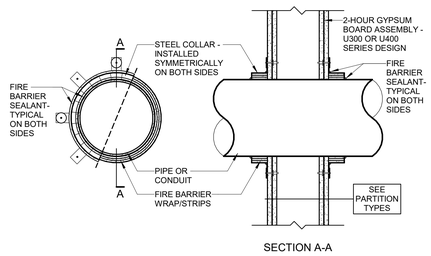

SECTION A-A

UL DESIGN NO.: W-L-1002
ASSEMBLY RATING: (1 & 2 HOUR)

11 FIRESTOP SYSTEMS_WALL PENETRATION 02
SCALE: 1 1/2" = 1'-0"

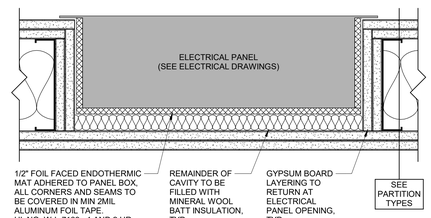

7 ELECTRICAL PANEL DETAIL
SCALE: 3" = 1'-0"

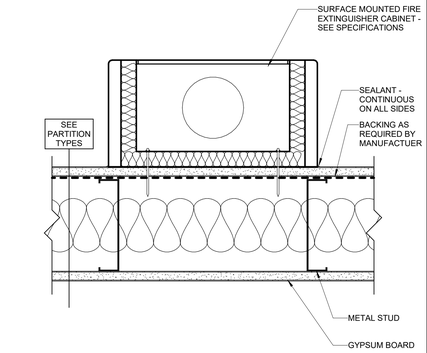

3 SURFACE MOUNTED FEC - METAL STUD WALL
SCALE: 3" = 1'-0"

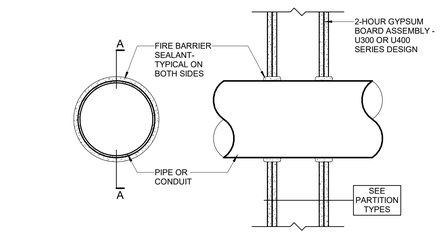

SECTION A-A

UL DESIGN NO.: W-L-1001
ASSEMBLY RATING: (1 & 2 HOUR)

10 FIRESTOP SYSTEMS (1 & 2 HOUR WALLS)
SCALE: 1 1/2" = 1'-0"

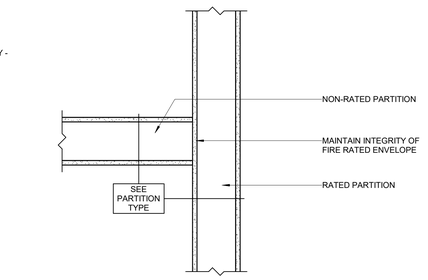

6 TYP. RATED/NON-RATED WALL CONNECTION
SCALE: 1 1/2" = 1'-0"

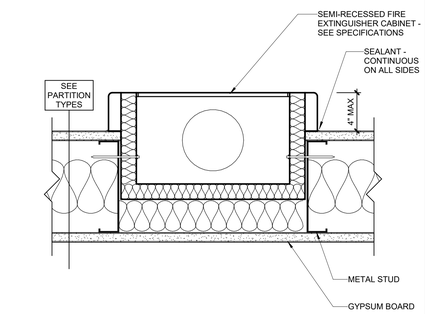

2 SEMI-RECESSED FEC - METAL STUD WALL
SCALE: 3" = 1'-0"

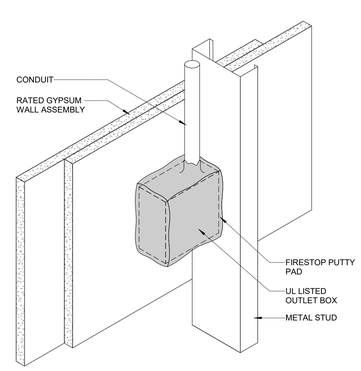

13 OUTLET BOX IN RATED WALL ASSEMBLY
SCALE: 3" = 1'-0"

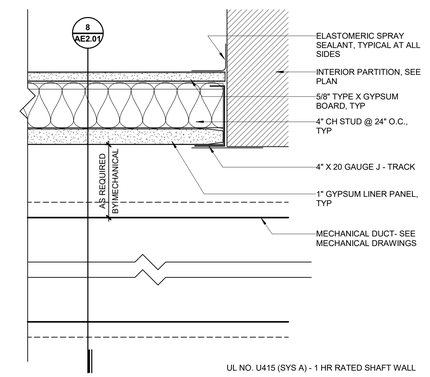

UL NO. U415 (SYS A) - 1 HR RATED SHAFT WALL

9 1HR RATED DUCT ENCLOSURE DETAIL
SCALE: 3" = 1'-0"

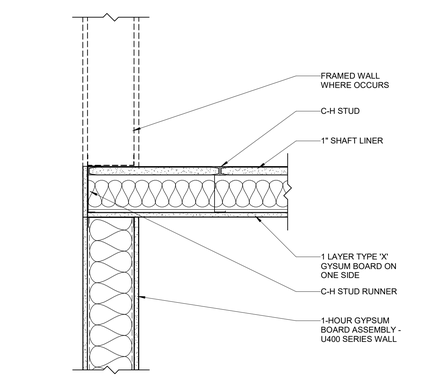

5 1-HOUR WALL TO 1-HOUR CEILING ENCLOSURE
SCALE: 1 1/2" = 1'-0"

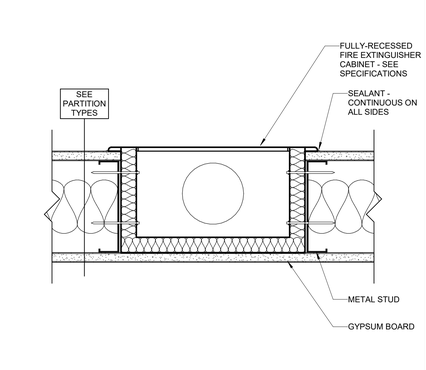

1 FULLY RECESSED FEC - METAL STUD WALL
SCALE: 3" = 1'-0"

tsk
314 South Water Street,
Suite 100
Henderson, NV 89015
phone: 702.456.3000
fax: 702.898.6209
www.tska.com

THESE DRAWINGS AND SPECIFICATIONS ARE THE PROPERTY OF TATE SNYDER KIMSEY ARCHITECTS AND MAY NOT BE REPRODUCED OR USED FOR ANY PURPOSE WITHOUT THE ARCHITECTS WRITTEN CONSENT. AS INSTRUMENTS OF SERVICE, THESE DOCUMENTS ARE NOT FINAL AND READY FOR USE, AND THEREFORE NOT VALID, UNLESS THEY ARE SEALED, SIGNED AND DATED.

Copyright, Ltd 2023

Consultant

PLEASE RECYCLE

Project

WEST WENDOVER NEW FS #13

N. GENE L. JONES WAY, WEST WENDOVER, NV 89883

Job No: 22-002.00

Owner

CITY OF WEST WENDOVER

PHASE-1B DESIGN DEVELOPMENT

REVISIONS

REV	DATE	DESCRIPTION

Sheet Title

LIFE SAFETY DETAILS

Date: MAY 3, 2023

Sheet No:

AE2.01

OWNER

CHRIS J. MELVILLE
CITY MANAGER
775-664-3081

1111 N GENE L. JONES WAY,
WEST WENDOVER, NV, 89883

CIVIL IMPROVEMENTS PLANS FOR CITY OF WEST WENDOVER FIRE STATION WEST WENDOVER, NEVADA

WEST WENDOVER ELKO COUNTY NEVADA

ENGINEER

SUMMIT ENGINEERING CORPORATION

1150 LAMOILLE HIGHWAY
ELKO, NEVADA 89801
(775) 738 - 8058

WWW.SUMMITNV.COM

NITIN I. BHAKTA NITIN@SUMMITNV.COM

PROJECT DATA

SITE PLAN INFORMATION:

CURRENT ZONING: PQP

APN: 010-740-212

SITE AREA: 1.26 ACRES
TOTAL AREA: 55,110 SQ.

SITE ADDRESS: 1111 N GENE L. JONES WAY,
WEST WENDOVER, NV, 89883

BASIS OF BEARINGS

IS THIS MAP IS THE NEVADA STATE PLANE COORDINATE SYSTEM, NAD 83/94 USING ELKO CITY ENGINEERING DEPARTMENT CONTROL POINTS "5029" AND "5027", WITH A BEARING OF SOUTH 87°37'53" EAST. THIS SURVEY WAS CONDUCTED IN GROUND COORDINATES, USING A GROUND SCALE FACTOR OF 1.000357

BASIS OF ELEVATION

NORTH AMERICAN VERTICAL DATUM OF 1988 (NAVD88)
CITY OF ELKO CONTROL POINT: 5000 "CP SUMMIT"
NAVD88 ELEVATION: 1551.80 METERS (5091.21 FEET)

ABBREVIATIONS

A.C.	.....	ASPHALTIC CONCRETE	M.D.D	.....	MAXIMUM DRY DENSITY
AGG.	.....	AGGREGATE	LT.	.....	LEFT
B.C.	.....	BEGIN CURVE	L.P.	.....	LOW POINT
B.F.	.....	BOTTOM OF FOOTING	M.H.	.....	MANHOLE
B.V.C.	.....	BEGIN VERTICAL CURVE	P.	.....	PAD ELEVATION
B.W.	.....	BACK OF SIDEWALK	PCC	.....	POINT OF COMPOUND CURV.
C.B.	.....	CATCH BASIN	PI.	.....	POINT OF INTERSECTION
℄	.....	CENTERLINE	P.R.C.	.....	POINT OF REVERSE CURVATURE
CONC.	.....	CONCRETE	P.V.C.	.....	POLYVINYL CHLORIDE PIPE
CONST.	.....	CONSTRUCT	P.O.	.....	PUSH ON
CLR	.....	CLEARANCE	P.U.E.	.....	PUBLIC UTILITY EASEMENT
C.P.	.....	CONCRETE PIPE	℄	.....	PROPERTY LINE
C.R.	.....	CURB RETURN	Q10	.....	10-YEAR STORM FLOW
D.I.	.....	DROP INLET	Q100	.....	100-YEAR STORM FLOW
DET.	.....	DETAIL	(R)	.....	RADIAL
E.	.....	ELECTRICAL	R	.....	RADIUS
ELEV.	.....	ELEVATION	REF.	.....	REFERENCE
E.C.	.....	END OF CURVE	R.C.P.	.....	REINFORCED CONCRETE PIPE
E.V.C.	.....	END OF VERTICAL CURVE	R.P.	.....	RADIUS POINT
EXIST.	.....	EXISTING	RT.	.....	RIGHT
(e)	.....	EXISTING	R/W	.....	RIGHT OF WAY
E.G.	.....	EXISTING GRADE	S	.....	SLOPE
F.F.	.....	FINISHED FLOOR	S.G.	.....	SUBGRADE
F.F.C.	.....	FRONT FACE OF CURB	S.S.	.....	SANITARY SEWER
F.G.	.....	FINISHED GRADE	S.W.	.....	SIDEWALK
F.H.	.....	FIRE HYDRANT	STD.	.....	STANDARD
℄	.....	FLOW LINE	SHT.	.....	SHEET
FLG.	.....	FLANGE	STA.	.....	STATION
G.	.....	GAS	S.D.	.....	STORM DRAIN
G.B.	.....	GRADE BREAK	T	.....	TANGENT
GTV.	.....	GATE VALVE	TELE.	.....	TELEPHONE
H.C.	.....	HANDICAPPED	T.C.	.....	TOP OF CURB
HORIZ.	.....	HORIZONTAL	T.B.	.....	THRUST BLOCK
H.P.	.....	HIGH POINT	TOE	.....	TOE OF SLOPE
INT.	.....	INTERSECTION	TOP	.....	TOP OF SLOPE
I.E.	.....	INVERT ELEVATION	TYP.	.....	TYPICAL
L	.....	LENGTH	V.C.	.....	VERTICAL CURVE
L.F.	.....	LINEAL FEET	V.P.I.	.....	VERT. POINT OF INTERSECTION
L.P.	.....	LOW POINT	W	.....	WATER
			△	.....	CURVE DELTA

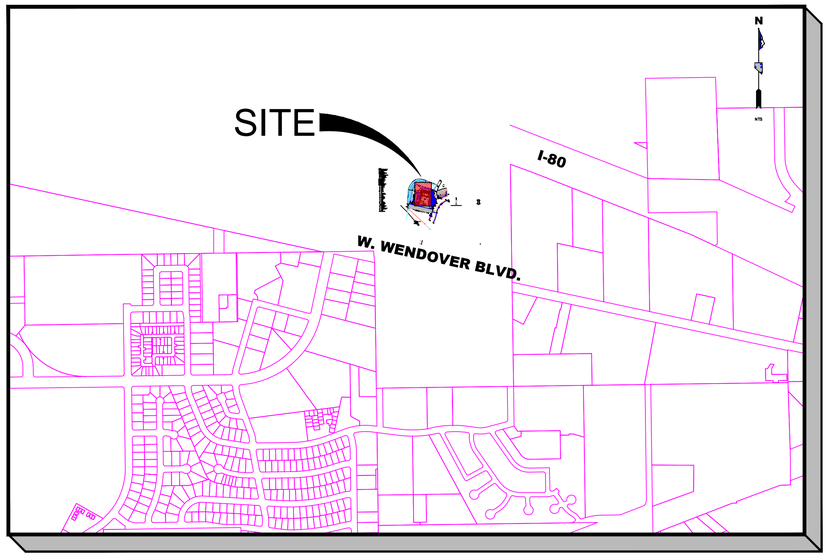

VICINITY MAP

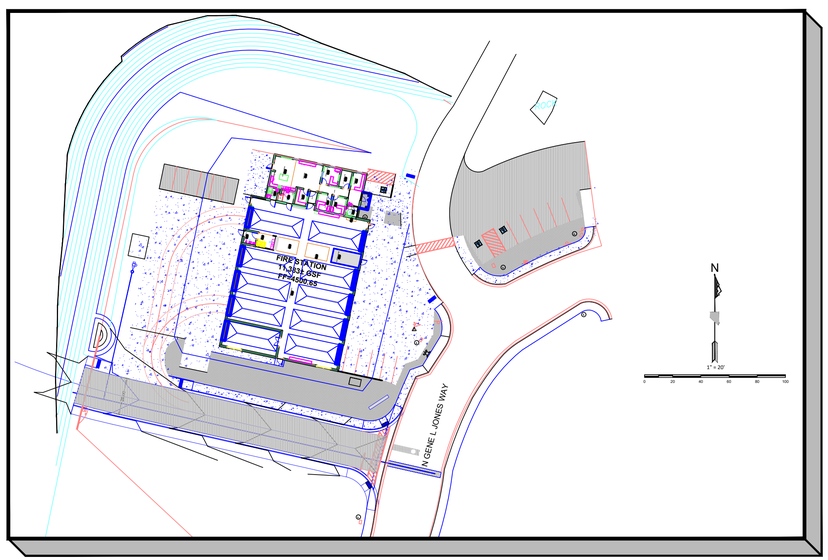

SITE PLAN

SHEET INDEX

C-1 ..... TITLE SHEET
C-2 ..... GENERAL NOTES SHEET
C-3 ..... SITE PLAN
C-4 ..... GRADING PLAN
C-5 ..... UTILITY PLAN
C-6 ..... PARKING & PAVING PLAN
C-7 ..... DETAIL SHEET

60% CIVIL SET
NOT FOR
CONSTRUCTION

LAND USE CLASSIFICATION

PQP (PUBLIC-QUASI-PUBLIC)

FLOOD PLAIN: BASED ON THE FLOOD INSURANCE RATE MAP FOR THE CITY OF WEST WENDOVER, 32007C8402E, DATED SEPTEMBER 4, 2013 A PORTION OF THE SITE DOES LIE WITHIN THE 100 YEAR FLOOD PLAIN

SITE INFO: BASED UPON THE CITY OF WEST WENDOVER AND BLM HISTORIC DATA THE SUBJECT PROPERTY HAS BEEN EXCLUSIVELY USED AS OPEN RANGE, VACANT LAND.

LOCATION: THIS SITE IS LOCATED WITHIN SECTION 29, TOWNSHIP 36 NORTH RANGE 70 EAST IN WEST WENDOVER, NEVADA

ADJACENT ZONING: NORTH - EXISTING VACANT LAND / I-80 RIGHT-OF-WAY
SOUTH - EXISTING - WENDOVER AVE.
EAST - EXISTING COMMERCIAL DEVELOPMENT
WEST - EXISTING COMMERCIAL / RESIDENTIAL DEVELOPMENT

UTILITIES

ELECTRIC ~ NV ENERGY
CABLE ~ ZITO MEDIA
TELEPHONE ~ FRONTIER COMMUNICATION
GAS ~ SOUTHWEST GAS CORPORATION

WATER ~ CITY OF WEST WENDOVER
SANITARY SEWER ~ CITY OF WEST WENDOVER
GARBAGE UTILITIES ~ WEST WENDOVER SANITATION (CITY LANDFILL)

SPECIFICATIONS

ALL CONSTRUCTION SHALL CONFORM TO THE STANDARD SPECIFICATIONS FOR PUBLIC WORKS CONSTRUCTION (CURRENT EDITION AND ANY APPURTENANT SUPPLEMENTS) SPONSORED AND DISTRIBUTED BY RENO, SPARKS, WASHOE COUNTY, AND THE RECOMMENDATIONS ESTABLISHED BY THE SOILS INVESTIGATION FOR THIS SITE.

ENGINEER'S STATEMENT

THESE PLANS (SHEETS C-1 OF 4 THROUGH C-4 OF 4 HAVE BEEN PREPARED IN ACCORDANCE WITH ACCEPTED ENGINEERING PROCEDURES AND GUIDELINES, AND ARE IN SUBSTANTIAL COMPLIANCE WITH APPLICABLE STATUTES, CITY ORDINANCES, AND CODES. IN THE EVENT OF CONFLICT BETWEEN ANY PORTION OF THESE PLANS AND CITY CODES, THE CITY CODES SHALL PREVAIL.

SUMMIT ENGINEERING CORPORATION
1150 LAMOILLE HIGHWAY, ELKO, NV, 89801
PHONE:(775) 738-8058 FAX:(775) 747-8559

Copyright SUMMIT ENG 2022

REV.	DATE	DESCRIPTION	BY	APP'D
1			SA	NIB

CIVIL IMPROVEMENT PLANS FOR
CITY OF WEST WENDOVER ~ FIRE STATION
TITLE SHEET
WENDOVER ELKO COUNTY NEVADA

DESIGNED BY: NIB
CHECKED BY: NIB
SCALE
HORIZ: NONE
VERT:
JOB NO: 3-82965

SHEET C-1 OF 7

N:\DWGS\82965_WWendoverFireSta\Civil\WWendoverFireStaSiteMap.DWG ~ 9:57 AM ~ 08-NOV-2022

LEGEND

- SD 12" — PROPOSED STORM DRAIN / SANITARY SEWER W/SIZE & DIRECTION INDICATOR
- SD 12" — EXISTING STORM DRAIN/SANITARY SEWER W/SIZE & DIRECTION INDICATOR
- SEWER LATERAL
- AC PAVEMENT AREA
- CONCRETE AREA (4000 PSI)
- TYPE 2 BASE GRAVEL AREA (95% MDD)
- EXISTING AC PAVEMENT
- GRADE BREAK
- 53.96 FC — PROPOSED ELEV. @ FRONT FACE TOP OF CURB
- 52.45 GB — PROPOSED ELEV. @ GRADE BREAK
- 51.27 HP — PROPOSED ELEV. @ HIGH PT.
- 51.86 FL — PROPOSED ELEV. @ FLOW LINE
- 51.25 FG — PROPOSED ELEV. @ FINISHED GRADE
- 4900 — EXISTING CONTOUR LINE
- 4900 — PROPOSED CONTOUR LINE
- ACCESSIBLE RAMP
- DRAINAGE SWALE FLOW LINE
- CUT OR FILL SLOPE
- SD — EXISTING STORM DRAIN
- GAS — EXISTING GAS
- PROPOSED FENCE
- TELE — EXISTING TELEPHONE
- OE — EXISTING ELECTRIC OVERHEAD LINE
- W — EXISTING WATERLINE
- SS — EXISTING SANITARY SEWER
- BACKFLOW PREVENTOR
- CHECK VALVE
- CHECK VALVE–DOUBLE
- FLUSH VALVE
- METER–DUAL
- METER–SINGLE
- REDUCER
- SERVICE–DUAL
- SERVICE–SINGLE
- TEE
- VALVE
- E — EX ELECTRIC VAULT/BOX
- EXISTING TEELPHONE/FIBER LINE
- EXISTING LIGHT
- EXISTING SIGN
- PROPOSED SIGN
- PROPOSED SS CLEANOUT
- EXISTING FIRE HYDRANT
- CAP W/ THRUST BLOCK
- 11.25° ELBOW
- 22.5° ELBOW
- 45° ELBOW
- 90° ELBOW
- ELECTRIC PULL BOX
- PROPOSED FIRE HYDRANT
- PROPOSED WTR METER VAULT
- EXISTING STREET LIGHT
- TYPE 7 STREET LIGHT
- PROPOSED MONUMENT
- WV — WATER VALVE (HOLLOW IF EXISTING)
- EXISTING GAS VALVE/MAIN
- EXISTING METER PIT
- SS & SD MANHOLE (HOLLOW IF EXISTING)
- CATCH BASIN (HOLLOW IF EXISTING)
- FIRE SERVICE
- GUY WIRE
- RIPRAP EROSION CONTROL

GENERAL NOTES

1. THE CONTRACTOR SHALL VERIFY IN THE FIELD, ALL ELEVATIONS, DIMENSIONS, FLOW LINES, EXISTING CONDITIONS, AND POINTS OF CONNECTIONS WITH ADJOINING PROPERTY (PUBLIC OR PRIVATE), ANY DISCREPANCIES SHALL BE CALLED TO THE ATTENTION OF THE PROJECT ENGINEER BEFORE PROCEEDING WITH THE WORK.
2. THE CONTRACTOR SHALL KEEP A REDLINE SET OF AS–BUILTS PLANS ON–SITE AND WORK WITH THE PROJECT ENGINEER AT COMPLETION TO ENSURE ACCURATE AS–BUILT DRAWINGS CAN BE GENERATED AND SUBMITTED TO THE CITY OF WEST WENDOVER AND THE OWNER BY THE PROJECT ENGINEER.
3. THE CONTRACTOR SHALL NOTIFY THE PROJECT ENGINEER, THE SOILS ENGINEER, THE CITY OF WEST WENDOVER, AND ALL UTILITY COMPANIES 48 HOURS PRIOR TO COMMENCEMENT OF WORK.
4. THE CONTRACTOR SHALL BE RESPONSIBLE FOR ANY AND ALL DAMAGE TO THE EXISTING UTILITIES ENCOUNTERED DURING CONSTRUCTION. IT SHALL BE THE CONTRACTOR'S RESPONSIBILITY TO CONTACT THE UTILITY COMPANIES FOR LOCATIONS PRIOR TO CONSTRUCTION. HORIZONTAL AND VERTICAL LOCATIONS OF EXISTING UTILITIES ARE APPROXIMATE ONLY. THE CONTRACTOR SHALL CALL UNDERGROUND SERVICES ALERT AT 1.800.227.2600 AT LEAST 48 HOURS PRIOR TO EXCAVATION.
5. ALL UTILITY TRENCHES SHALL CONFORM TO SIERRA PACIFIC POWER, ZITO MEDIA, FRONTIER COMMUNICATIONS, AND SOUTHWEST GAS SPECIFICATIONS. CONTRACTOR TO COORDINATE INSTALLATION OF ALLUTILITY TRENCHES WITH LOCAL UTILITIES.
6. CONTRACTOR TO OBTAIN AND PAY FOR PERMITS FROM THE CITY OF WEST WENDOVER PRIOR TO EXCAVATING WITHIN THE CITY RIGHT–OF–WAY.
7. AT ALL POINTS WHERE SEWER (SANITARY OR STORM), WATER MAINS AND LATERALS CROSS, VERTICAL AND HORIZONTAL SEPARATION SHALL BE MAINTAINED PER NAC. ENGINEER AND CONTRACTOR TO REFERENCE SECTION 445A.6715 TO SECTION 445A.6718 OF THE NEVADA ADMINISTRATIVE CODE FOR UTILITY SEPARATION AND CLEARANCES.
8. ALL SANITARY SEWER MAINS SHALL BE A MIN. OF 8" SDR 35 PVC (GREEN) PIPE. ALL RESIDENTIAL SANITARY SEWER LATERALS SHALL BE A MIN. 4" SDR 35 PVC PIPE WITH A 2% SLOPE MINIMUM UNLESS OTHERWISE SHOWN.
9. ALL WATER MAINS SHALL BE MIN. OF 8" THICK CLASS 50 OR PRESSURE CLASS 350 DUCTILE IRON PIPE WITH POLYETHYLENE ENCASEMENT WRAPPED IN (8 MIL VISQUEEN) OR DR 18 C900 PIPE UNLESS OTHERWISE SHOWN. ALL 4"/6" FIRE SPRINKLER LINES SHALL BE DIP OR DR 18 C900 PIPE.
10. ALL CONSTRUCTION SHALL CONFORM TO AWWA C–600. MINIMUM COVER OVER THE WATER MAIN SHALL BE 42" WITH TRACE WIRE AND WARNING TAPE.
11. THE CITY OF WEST WENDOVER UTILITY DEPARTMENT SHALL BE CONTACTED TO PERFORM ALL TAPS ONTO CITY OF WEST WENDOVER UTILITIES.
12. THE CITY OF WEST WENDOVER UTILITY DEPARTMENT SHALL BE CONTACTED FOR AUTHORIZATION TO PLACE ANY NEW WATER SYSTEMS, EXTENSIONS, REPLACEMENTS IN EXISTING SYSTEMS AND VALVED SECTIONS INTO SERVICE FOR TESTING OR FINAL ACCEPTANCE.
13. ALL WATER SERVICE LINES SHALL BE 2" IRON PIPE SIZE (IPS) RATED 200 PSI POLYETHYLENE DR11 UNLESS SHOWN OTHERWISE.
14. BEFORE BEING CERTIFIED BY AN ENGINEER OR ACCEPTED BY THE CITY OF WEST WENDOVER, ANY NEW WATER SYSTEMS, EXTENSIONS, REPLACEMENTS IN EXISTING SYSTEMS AND VALVED SECTIONS SHALL BE DISINFECTED IN ACCORDANCE WITH AWWA C–651, "DISINFECTING WATER MAINS".
15. BEFORE BEING CERTIFIED BY AN ENGINEER OR ACCEPTED BY THE CITY OF WEST WENDOVER, ANY NEW WATER SYSTEMS, EXTENSIONS, REPLACEMENTS IN EXISTING SYSTEMS AND VALVED SECTIONS SHALL BE PRESSURE TESTED IN ACCORDANCE WITH NAC445A.67145.7 (a) AND (b) AND INSPECTED BY THE CITY OF WEST WENDOVER.
16. GRADING AROUND BUILDINGS TO BE DONE IN A MANNER AS TO PROVIDE POSITIVE DRAINAGE AWAY FROM BUILDING IN ACCORDANCE WITH CITY OF WEST WENDOVER REQUIREMENTS.
17. LAND GRADING SHALL BE DONE IN A METHOD TO PREVENT DUST FROM TRAVERSING THE PROPERTY LINE.
18. WATER METERS SHALL BE INSTALLED DURING ANY DEVELOPMENT AND PRIOR TO THE ISSUANCE OF CERTIFICATE OF OCCUPANCY FOR THE BUILDING SHOWN OR SUBSEQUENT DIVISION OF THE PARCELS SHOWN. WATER AND SEWER THROUGHOUT THE DEVELOPMENT WILL BE DEDICATED TO THE CITY OF WEST WENDOVER UP TO THE WATER METER LOCATIONS. A BLANKET UTILITY EASEMENT SHALL BE GRANTED THROUGHOUT THE PARKING CORRIDOR.
19. ALL EXISTING UTILITY ADJUSTMENTS SHALL BE THE RESPONSIBILITY OF THE CONTRACTOR.
20. ALL EXISTING ASPHALT REMOVAL AND REPLACEMENT SHALL BE THE RESPONSIBILITY OF THE CONTRACTOR.
21. ADD 4000 FEET TO ALL SPOT ELEVATION.

EROSION CONTROL NOTES

1. ALL PUBLIC RIGHT OF WAYS LOCATED ADJACENT TO THE SITE (E.G. STREETS AND SIDEWALKS) MUST BE CLEANED DAILY OF ALL SEDIMENT OR WASTES THAT ORIGINATE FROM THE SITE.
2. BMPS IN ADDITION TO THOSE INDICATED IN THE STORM WATER POLLUTION PREVENTION PLAN (SWPPP) MAY BE REQUIRED IF THEY DO NOT MEET THE CITY OF WEST WENDOVER PERFORMANCE STANDARDS.
3. TEMPORARY OR PERMANENT STABILIZATION MUST BE APPLIED NO LATER THAN 14 DAYS TO ALL DISTURBED SOILS, INCLUDING STOCKPILES, WHERE CONSTRUCTION ACTIVITY HAS CEASED.
4. ALL BMPS MUST BE INSPECTED WEEKLY, PRIOR TO FORECASTED RAIN EVENTS, AND WITHIN 24 HOURS AFTER ANY EVENT THAT CREATES RUNOFF AT THE SITE.
5. ACCUMULATED SEDIMENT MUST BE REMOVED FROM BMP'S WHEN THE DESIGN CAPACITY HAS BEEN REDUCED BY 50 PERCENT OR MORE. SEDIMENT MUST ALSO BE REMOVED WITHIN SEVEN DAYS AFTER A RUNOFF EVENT OR PRIOR TO THE NEXT FORECASTED EVENT, WHICHEVER IS EARLIER.
6. ALL BEST MANAGEMENT PRACTICES (BMP'S) SHALL BE IN ACCORDANCE WITH THE "CITY OF WEST WENDOVER CONSTRUCTION SITE BEST MANAGEMENT PRACTICES HANDBOOK", DATED DECEMBER 2005, AND AVAILABLE THROUGH THE CITY OF WEST WENDOVER.
7. PRIOR TO THE START OF CONSTRUCTION, THE CONTRACTOR SHALL HAVE IN PLACE ALL NECESSARY BEST MANAGEMENT PRACTICES THAT SHALL BE USED TO MINIMIZE DUST, PREVENT EROSION, AND PREVENT POLLUTION LADEN RUNOFF FROM ENTERING THE ADJACENT STORM DRAIN FACILITIES. THE CONTRACTOR SHALL MAINTAIN, REPAIR, REPLACE, SUBSTITUTE, OR SUPPLEMENT BMP'S AT THE CONSTRUCTION SITE AS CONDITIONS WARRANT DURING CONSTRUCTION. BMP'S MAY INCLUDE, BUT NOT BE LIMITED TO, THE FOLLOWING BMP'S: (1) SILT FENCING OR STRAW WADDLES AT THE DOWNHILL LIMITS OF GRADING, (2) STABILIZED CONSTRUCTION SITE ENTRY/EXIT, (3) PERMANENT SLOPE RE–VEGETATION ON ALL DISTURBED AREAS, (4) INLET PROTECTION AT EXISTING CATCH BASINS, (5) STOCKPILE MANAGEMENT BMP'S, (6) DUST CONTROL BMP'S, (7) A CONCRETE WASHOUT AREA, AND (8) MEASURES TO PROTECT EXISTING NATIVE VEGETATION.

STORMWATER POLLUTION PREVENTION NOTES

1) THE CONTRACTOR AND/OR THEIR AUTHORIZED AGENTS SHALL EACH DAY REMOVE ALL SEDIMENT, MUD, CONSTRUCTION DEBRIS, OR OTHER POTENTIAL POLLUTANTS THAT MAY HAVE BEEN DISCHARGED TO, OR ACCUMULATE IN, THE PUBLIC RIGHTS OF WAYS OF THE CITY OF WEST WENDOVER AS A RESULT OF CONSTRUCTION ACTIVITIES ASSOCIATED WITH THIS SITE DEVELOPMENT OR CONSTRUCTION PROJECT. SUCH MATERIALS SHALL BE PREVENTED FROM ENTERING THE STORM WATER SYSTEM.

2) ADDITIONAL CONSTRUCTION SITE DISCHARGE BEST MANAGEMENT PRACTICES (BMP) MAY BE REQUIRED OF THE OWNER AND HIS OR HER AGENTS DUE TO UNFORESEEN EROSION PROBLEMS OR IF THE SUBMITTED PLAN DOES NOT MEET THE PERFORMANCE STANDARDS SPECIFIED IN THE CITY OF WEST WENDOVER CONSTRUCTION SITE BEST MANAGEMENT PRACTICES HANDBOOK.

3) TEMPORARY OR PERMANENT STABILIZATION PRACTICES WILL BE INSTALLED ON DISTURBED AREAS AS SOON AS PRACTICABLE AND NO LATER THAN 14 DAYS AFTER THE CONSTRUCTION ACTIVITY IN THAT PORTION OF THE SITE HAS TEMPORARILY OR PERMANENTLY CEASED. SOME EXCEPTIONS MAY APPLY; REFER TO STORM WATER GENERAL PERMIT NVS040000.

4) AT A MINIMUM, THE CONTRACTOR OR HIS AGENT SHALL INSPECT ALL DISTURBED AREAS, AREAS USED FOR STORAGE OF MATERIALS AND EQUIPMENT THAT ARE EXPOSED TO PRECIPITATION, VEHICLE ENTRANCE AND EXIT LOCATIONS AND ALL BMP's WEEKLY, PRIOR TO A FORECASTED RAIN EVENT AND WITHIN 24 HOURS AFTER ANY ACTUAL RAIN EVENT. THE CONTRACTOR OR HIS AGENT SHALL UPDATE OR MODIFY THE STORMWATER POLLUTION PLAN AS NECESSARY. SOME EXCEPTIONS TO WEEKLY INSPECTIONS MAY APPLY, SUCH AS FROZEN GROUND CONDITIONS OR SUSPENSION OF LAND DISTURBANCE ACTIVITIES. REFER TO STORMWATER GENERAL PERMIT SMALL MS4 NVS040000.

5) ACCUMULATED SEDIMENT IN BMP's SHALL BE REMOVED AT REGULAR INTERVALS, WITHIN SEVEN DAYS AFTER A STORMWATER RUNOFF EVENT, AND PRIOR TO THE NEXT ANTICIPATED STORM EVENT. SEDIMENT MUST BE REMOVED WHEN BMP DESIGN CAPACITY HAS BEEN REDUCED BY 50 PERCENT OR MORE.

6) REFER TO CITY OF WEST WENDOVER CONSTRUCTION SITE BEST MANAGEMENT PRACTICES HANDBOOK (PUBLISHED BY THE CITY OF WEST WENDOVER, DATED DEC. 2015) FOR DETAILS OF ALL BMP'S SHOWN ON THIS PLAN.

7) THE BMP'S SHOWN ON THIS PLAN ARE SCHEMATIC ONLY. FINAL BMP SELECTION AND LOCATION SHALL BE DETERMINED BY THE SITE OPERATOR OR THE OWNER'S REPRESENTATIVE.

8) THE CONTRACTOR SHALL SUBMIT TO THE NEVADA DEPARTMENT OF ENVIRONMENTAL PROTECTION (NDEP) FOR STORM WATER DISCHARGE PERMIT. THE CONTRACTOR SHALL SIGN THE NOTICE OF INTENT FOR THE PROPOSED PROJECT.

9) ALL EROSION CONTROL MEASURES SHALL CONFORM TO THE GUIDELINES OUTLINED IN THE CITY OF WEST WENDOVER CONSTRUCTION SITE BEST MANAGEMENT PRACTICE HANDBOOK 2005 EDITION. A COPY OF THIS MANUAL TO BE ON–SITE AT ALL TIMES.

10) ALL CONSTRUCTION SHALL CONFORM TO THE 2016 EDITION OF THE "STANDARD SPECIFICATION FOR PUBLIC WORKS CONSTRUCTION," CONTRACTOR TO KEEP A COPY OF THE SPECIFICATION ON THE JOB SITE AT ALL TIMES

SLOPE STABILIZATION

1) ALL DISTURBBED SLOPES STEEPER THAN 3:1 SHALL BE RIPRAPPED. RIPRAP SHALL BE RUN OF MINE OR UNSCREENED.

2) ALL SLOPES 3:1 OR LESS SHALL BE PLANTED AS FOLLOWS:

   a. HAND SPREAD ENTIRE SEEDED AREA.
   b. IRRIGATION IS TO MATCH THE AVAILABLE WATER HOLDING CAPACITY OF THE SOIL (AWC) FOR EACH SLOPE TAKING INTO ACCOUNT THE PLANT CONSUMPTIVE USE PLUS A FACTOR FOR IRRIGATION SYSTEM EFFICIENCY.
   c. PROVIDE TEMPORARY IRRIGATION UNTIL VEGETATION IS ESTABLISHED.

3) PROTECT EXISTING AND PROPOSED DRAINAGE INLETS DURING CONSTRUCTION IN ACCORDANCE WITH THE FOLLOWING DETAILS:

   a. STORMDRAIN INLET PROTECTION – (BMP DP–3)
   b. CATCH BASIN FILTERS (BMP– DP–4)

4) MAINTENANCE

   a. EXCLUDE FOOT TRAFFIC AS MUCH AS POSSIBLE DURING PLANT ESTABLISHMENT.
   b. AREAS THAT FAIL TO RESPOND OR BECOME DAMAGED SHOULD BE TREATED AGAIN USING SAME TREATMENT INITIALLY APPLIED

5) RECLAMATION SEED MIX (TOTAL 60 BULK POUNDS PER ACRE):

	SPECIES	BULK POUND PER ACRE
1.	BIG SAGEBRUSH	4.0
2.	RABBITBRUSH	4.0
3.	BITTERBRUSH	4.0
4.	INDIAN RICEGRASS	5.0
5.	GREAT BASIN WILDRYE	5.0
6.	COVER SHEEP FESCUE	10.0
7.	SODAR STREAMBANK WHEATGRASS	9.0
8.	ANNUAL RYEGRASS	15.0
9.	PURPLE SAGE (SALVIA DORII)	1.0
10.	FOUR WING SALTBRUSH	1.0

6) FERTILIZER
   16–16–8 — 400/ACRE

7) TOPSOIL AND VEGETATIVE STRIPPINGS SHALL BE STOCKPILED FOR REAPPLICATION TO ALL DISTURBED AREAS.

8) PLANTING MIX (A MIXTURE OF THE FOLLOWING COMPONENTS MEASURED BY VOLUME):

   a. 60% NATURAL SOIL
   b. 30% SOIL CONDITIONER / COMPOST
      10% AXIS SOIL CONDITIONER

SIGNAGE & STRIPING NOTES

1. ALL SIGNAGE AND PAVEMENT MARKINGS SHALL COMPLY WITH STANDARD SPECIFICATIONS FOR PUBLIC WORKS CONSTRUCTION, PROJECT SPECIFICATIONS, THESE PLANS, AND THE MOST CURRENT EDITION OF THE MANUAL FOR UNIFORM TRAFFIC CONTROL DEVICES (M.U.T.C.D.).
2. PARKING LOT STRIPING AND PAVEMENT MARKINGS SHALL BE INSTALLED AFTER APPLICATION AND CURING OF SLURRY SEAL. ASPHALT SURFACE SHALL BE CLEAN AND DRY PRIOR TO APPLICATION OF ANY PARKING LOT STRIPING, SYMBOLS, AND OTHER PAVEMENT MARKINGS.
3. CONTRACTOR SHALL VERIFY LOCATION OF EXISTING AND PROPOSED UTILITY LOCATIONS PRIOR TO INSTALLATION OF SIGNAGE.
4. SIGNAGE SHOWN ON THIS PLAN DOES NOT INCLUDE TRAFFIC CONTROL THAT MAY BE REQUIRED PRIOR TO AND DURING CONSTRUCTION. THE CONTRACTOR SHALL BE RESPONSIBLE FOR ANY TRAFFIC CONTROL THAT MAY BE REQUIRED DURING CONSTRUCTION.
5. ANY ADDITIONAL SIGNAGE AND STRIPING NEEDED SHALL BE THE RESPONSIBILITY OF THE CONTRACTOR

Avoid cutting underground utility lines. It's costly.
Call before you Dig
1–800–227–2600
UNDERGROUND SERVICE (USA)

CONSTRUCTION SPECIFICATIONS

1. **THE FIELD SURVEY, POWERLINE POLES, EASEMENTS AND EXISTING TOPOGRAPHY** SHOWN ON THESE IMPROVEMENT PLANS HAVE BEEN PROVIDED BY SUMMIT ENGINEERING (PHONE NO. 775-738-8058) OF WEST WENDOVER, NEVADA FOR THE OWNER, ARCHITECT, AND ENGINEER USE.
2. **PROJECT STANDARD SPECIFICATIONS.** ALL WORK RELATED TO THESE PROJECT IMPROVEMENTS SHALL BE EXECUTED AND COMPLETED IN ACCORDANCE WITH ALL STATE AND LOCAL STANDARDS REFERENCED ON THE PROJECT PLAN SHEETS AND THE PROJECT WRITTEN WORK SPECIFICATIONS. ALL SITE WORK CONSTRUCTION SHALL COMPLY WITH THE ***"STANDARD SPECIFICATIONS FOR PUBLIC WORKS CONSTRUCTION, LATEST EDITION"***, SPONSORED AND DISTRIBUTED BY THE REGIONAL TRANSPORTATION COMMISSION OF WASHOE COUNTY AND ADOPTED BY CITY OF WEST WENDOVER, FOR PUBLIC WORKS CONSTRUCTION. ALL CIVIL WORK SHALL COMPLY WITH THE APPLICABLE SECTIONS OF THESE SPECIFICATIONS UNLESS MODIFIED WITHIN THE WRITTEN CONTRACT WITH THE CONTRACTOR. THESE SPECIFICATIONS SHALL BE HEREAFTER REFERRED TO AS THE PROJECT ***"STANDARD SPECIFICATIONS"***. CONSTRUCTION DETAILS SHALL COMPLY WITH THE CONSTRUCTION DETAILS SHOWN IN THESE PLANS. CONSTRUCTION DETAILS NOT SHOWN SHALL BE IN ACCORDANCE WITH THE ***STANDARD DETAILS FOR PUBLIC WORKS CONSTRUCTION, LATEST EDITION***, AS ADOPTED AND DISTRIBUTED BY CITY OF WEST WENDOVER AND THE REGIONAL TRANSPORTATION COMMISSION OF WASHOE COUNTY, NEVADA.
3. **CLEARING & GRUBBING AND REMOVAL OF MATERIALS.** CLEARING & GRUBBING SHALL CONSIST OF REMOVING ALL BRUSH, GRASS, TOPSOIL MATERIALS AND OTHER NATURAL OR OBJECTIONABLE MATERIAL FROM THE CONSTRUCTION LIMITS PRIOR TO SUBGRADE PREPARATION. CLEARING & GRUBBING SHALL BE PERFORMED IN ACCORDANCE WITH **SECTION 300 CLEARING & GRUBBING** OF THE REFERENCED ***STANDARD SPECIFICATIONS.***
4. **STORMWATER AND EROSION CONTROL.** THE CONTRACTOR SHALL MAINTAIN AN EROSION CONTROL PROGRAM ON SITE AT ALL TIMES THAT MEETS, OR EXCEEDS, CITY OF WEST WENDOVER AND THE STATE OF NEVADA REQUIREMENTS. THIS SHALL INCLUDE THE PLACEMENT OF SILT FENCE AROUND THE PERIMETER OF THE JOBSITE AND THE PLACEMENT OF HAY BALES AND VEHICLE MUD TRACKOUT PREVENTION MEASURES AT INGRESS AND EGRESS LOCATIONS ON THE JOBSITE. THE CONTRACTOR SHALL DESIGNATE A LOCATION ON SITE TO CONSTRUCT A CONCRETE WASHOUT PIT FOR READY-MIX CONCRETE CLEANUP. AT THE COMPLETION OF WORK THE CONCRETE CLEANUP PIT SHALL BE REMOVED FROM THE SITE. A CLEAN JOBSITE SHALL BE MAINTAINED BY THE CONTRACTOR. A STORMWATER DISCHARGE PERMIT, FROM THE STATE OF NEVADA AND CITY OF WEST WENDOVER IS REQUIRED ON ALL CONSTRUCTION WORK SITES THAT EXCEED 1.0 ACRES IN SIZE. THE WORK SITE FOR THIS PROJECT IS APPROXIMATELY 5.38 ACRES±.
5. **DUST CONTROL PROGRAM.** THE CONTRACTOR SHALL BE RESPONSIBLE FOR MAINTAINING A DUST CONTROL PROGRAM ON SITE AT TIMES. THE CONTRACTOR SHALL TAKE ALL REASONABLE PRECAUTIONS TO ENSURE THAT AIRBORN DUST DOES NOT LEAVE THE JOBSITE.
6. **UNDERGROUND UTILITIES.** THE CONTRACTOR SHALL BE RESPONSIBLE FOR PROTECTING ALL UNDERGROUND UTILITIES AT ALL TIMES DURING CONSTRUCTION. THE LOCATIONS OF UNDERGROUND UTILITIES SHOWN ON THE PROJECT DRAWINGS ARE APPROXIMATE AND BASED ON EXISTING RECORDS AND FIELD SURVEYS. THE CONTRACTOR SHALL CALL **1-800-227-2600 "USA CALL BEFORE YOU DIG"** FOR UTILITY FIELD LOCATIONS PRIOR TO COMMENCING EXCAVATION ON SITE. THE CONTRACTOR SHALL COORDINATE ALL WORK WITH THE FOLLOWING UTILITY COMPANIES:

ELECTRIC POWER	NV ENERGY
NATURAL GAS	SOUTHWEST GAS CORPORATION,
TELEPHONE	FRONTIER TELEPHONE COMPANY
FIBER OPTIC COMMUNICATION LINES	ANTHEM, CC COMMUNICATION, FRONTIER TELEPHONE AND OTHER OPERATORS
CABLE TV	ZITO MEDIA
WATER & SEWER	CITY OF WEST WENDOVER

7. **SUBGRADE PREPARATION, EXCAVATION AND FILL.** SUBGRADE SOILS SHALL BE PROPERLY PROCESSED BY MOISTURIZING AND COMPACTING THE SUBGRADE SOIL TO A MINIMUM OF 90% MAXIMUM DRY DENSITY IN ACCORDANCE WITH TEST METHOD ASTM D 1557. FILL SOIL SHALL ALSO BE PROPERLY MOISTURIZED AND COMPACTED TO A MINIMUM OF 90% MAXIMUM DRY DENSITY IN ACCORDANCE WITH TEST METHOD ASTM D 1557. EARTHWORK SHALL COMPLY WITH **SECTION 302 SUBGRADE PREPARATION, SECTION 303 UNCLASSIFIED EXCAVATION, SECTION 304 UNCLASSIFIED FILL,** AND **SECTION 305 TRENCH EXCAVATION AND BACKFILL** OF THE PROJECT ***STANDARD SPECIFICATIONS.***
8. **WATER DISTRIBUTION PIPE, SANITARY SEWER PIPE, AND STORM DRAIN MATERIALS.** ALL WATER PIPE, SANITARY SEWER PIPE, AND STORM DRAIN MATERIALS INSTALLED SHALL BE IN ACCORDANCE WITH CITY OF WEST WENDOVER AND CITY OF WEST WENDOVER STANDARDS AND SHALL MEET THE REQUIREMENTS OF **SECTION 203.00 NON-PRESSURE AND PRESSURE PIPE** OF THE REFERENCED PROJECT ***STANDARD SPECIFICATIONS*** AS ADOPTED FOR PUBLIC WORKS CONSTRUCTION BY CITY OF WEST WENDOVER. WATER PIPE MATERIALS ARE SHOWN ON PLAN SHEET C-6. INSTALLATION OF BURIED WATER, SANITARY SEWER AND STORM DRAIN PIPE MATERIALS SHALL BE DONE AS SPECIFIED IN **SECTION 306 STORM DRAIN, CULVERTS, AND SANITARY SEWER CONSTRUCTION** AND **SECTION 307 DOMESTIC WATER AND IRRIGATION SYSTEMS** OF THE PROJECT ***STANDARD SPECIFICATIONS.*** UNDERGROUND WATER AND SEWER PIPING SHALL ALSO COMPLY WITH THE LATEST ADOPTED EDITION OF THE **UNIFORM PLUMBING CODE.** SANITARY SEWER PIPE SHALL BE SDR-35 GRAVITY SEWER PIPE AND SHALL BE INSTALLED AT THE LOCATIONS SHOWN ON THE PROJECT PLANS. ABS OR PVC PRESSURE PIPE SHALL BE USED WHERE PROPER SEPARATION BETWEEN POTABLE WATER LINES AND SANITARY SEWER LINES CANNOT BE MAINTAINED. WATER PIPE 4-INCHES IN DIAMETER TO 12-INCHES IN DIAMETER SHALL MEET THE MINIMUM REQUIREMENTS OF STANDARD **ANSI/AWWA C900 (DR 18).** ALL FITTINGS SHALL BE DUCTILE IRON. PVC WATER PIPE SHALL BE INSTALLED IN ACCORDANCE WITH STANDARD **ANSI/AWWA C605 - UNDERGROUND INSTALLATION OF PVC PRESSURE PIPE FOR WATER**. WATER SERVICE PIPE SHALL BE POLYETHYLENE WATER SERVICE PIPE , IRON PIPE SIZE (CTS), WITH A MINIMUM WORKING PRESSURE OF 200-PSI. CONSTRUCTION SHALL COMMENCE UPON APPROVAL OF THE CONSTRUCTION PLANS BY CITY OF WEST WENDOVER.
9. **AGGREGATE BASE MATERIAL.** AGGREGATE BASE MATERIAL SHALL BE OF THE CLASSIFICATION SHOWN ON THE PLANS AND SHALL BE PLACED TO THE COMPACTED THICKNESS SHOWN . AGGREGATE BASE SHALL BE MOISTURIZED, SPREAD, AND COMPACTED IN MAXIMUM LIFT THICKNESS OF 8-INCHES. MINIMUM COMPACTION REQUIREMENTS ARE 95% MAXIMUM DRY DENSITY IN ACCORDANCE WITH TEST METHOD ASTM D 1557. ALL AGGREGATE BASE MATERIAL, INCLUDING TYPE 2, CLASS B, AGGREGATE BASE, AND TYPE 1, CLASS A, AGGREGATE BASE SHALL MEET THE MATERIAL REQUIREMENTS SPECIFIED IN **SECTION 200 AGGREGATES FOR BASE COURSES** OF THE ***STANDARD SPECIFICATIONS.*** PLACEMENT OF AGGREGATE BASE MATERIAL SHALL BE AS SPECIFIED IN **SECTION 308 AGGREGATE BASE COURSES** OF THE PROJECT ***STANDARD SPECIFICATIONS.***
10. **CONCRETE CURB & GUTTERS, VALLEY GUTTERS, SIDEWALK AND APPROACH SLABS.** AGGREGATES FOR CONCRETE SHALL COMPLY WITH **SECTION 200 AGGREGATES** OF THE PROJECT ***STANDARD SPECIFICATIONS.*** CEMENT AND OTHER ADMIXTURES SHALL COMPLY WITH **SECTION 202 CEMENT AND RELATED MATERIALS.** ALL CONCRETE SHALL BE AIR ENTRAINED WITH A MINIMUM STRENGTH OF 4,000-PSI AT 28-DAYS. CONCRETE MIX DESIGNS SHALL BE PROVIDED TO THE ENGINEER, ARCHITECT AND OWNER AND SHALL BE CURRENT. MIX DESIGNS SHALL BE AS SPECIFIED IN THE PROJECT ***STANDARD SPECIFICATIONS*** FOR THE TYPE OF WORK. CONCRETE SHALL BE PLACED, FINISHED AND CURED IN ACCORDANCE WITH **SECTION 311 CONCRETE STRUCTURES AND MASONRY CONSTRUCTION** AND **SECTION 312 CONCRETE CURBS, GUTTERS, WALKS, DRIVEWAYS, AND ALLEY RETURNS** OF THE PROJECT ***STANDARD SPECIFICATIONS.***
11. **PLANTMIX BITUMINOUS PAVEMENT, PRIME COATS, SEAL COATS, AND ASPHALTIC MATERIALS.** AGGREGATES FOR BITUMINOUS PAVEMENT SHALL BE AS SPECIFIED IN **SECTION 200 AGGREGATES** OF THE PROJECT ***STANDARD SPECIFICATIONS.*** ASPHALT CEMENTS AND BITUMINOUS MATERIALS SHALL MEET THE REQUIREMENTS OF **SECTION 201 BITUMINOUS MATERIALS** OF THE PROJECT ***STANDARD SPECIFICATIONS.*** THE CONTRACTOR SHALL PROVIDE THE ENGINEER WITH A MIX DESIGN FOR APPROVAL PRIOR TO PLACEMENT OF BITUMINOUS PAVING MATERIALS. PLANTMIX BITUMINOUS PAVEMENT AGGREGATE SHALL BE TYPE 2 ON CITY ROADS AND TYPE 3 IN PARKING AREAS, UNLESS OTHERWISE SPECIFIED OR APPROVED. LIQUID ASPHALT AND EMULSIFIED ASPHALT PRIME COAT SHALL BE PLACED IN ACCORDANCE WITH **SECTION 315 PRIME COAT** OF THE ***STANDARD SPECIFICATIONS.*** TACK COAT AND SEAL COAT SHALL BE PLACED IN ACCORDANCE WITH **SECTION 316 TACK COAT** AND **SECTION 317 SEAL COAT.** PLANTMIX BITUMINOUS PAVEMENT SHALL BE DELIVERED, PLACED AND COMPACTED WITHIN SPECIFIED TOLERANCES IN ACCORDANCE WITH THE REQUIREMENTS SPECIFIED IN **SECTION 320 PLANTMIX BITUMINOUS PAVEMENT** OF THE PROJECT ***STANDARD SPECIFICATIONS.***
12. **ROCK RIPRAP, EROSION CONTROL ROCK, AND ROCK LANDSCAPING MATERIAL.** ROCK RIPRAP SHALL BE AS SHOWN ON THE PROJECT DRAWINGS. RIRAP MATERIAL SHALL BE AS SPECIFIED IN **SUBSECTION 200.07 RIPRAP** OF THE PROJECT ***STANDARD SPECIFICATIONS.*** RIPRAP AND LANDSCAPING ROCK FOR EROSION CONTROL SHALL MEET THE SIZE AND CONSISTENCY REQUIREMENTS SHOWN ON THE PLANS.
13. ALL ELEVATIONS SHOWN ON THE CONSTRUCTION PLANS ARE TO THE FINISH GRADE ELEVATION OF THE MATERIAL COURSES INDICATED ON THE PLAN DRAWINGS. BURIED UTILITY LINE ELEVATIONS SHALL BE NOTED AS EITHER TOP OF PIPE OR INVERT ELEVATION (PIPE FLOWLINE). THE CONTRACTOR SHALL VERIFY UTILITY LINE LOCATIONS AND PROTECT ALL EXISTING AND NEW UTILITY LINES.
14. THE CONTRACTOR SHALL BE RESPONSIBLE FOR MAINTAINING AN ADEQUATE SAFETY PROGRAM DURING ALL CONSTRUCTION WORK ON THE PROJECT SITE. MINIMUM SAFETY STANDARDS TO BE MET ON THE JOB SHALL EXCEED THOSE MINIMUM STANDARDS ESTABLISHED BY THE FEDERAL GOVERNMENT (OSHA), THE STATE OF NEVADA AND THE LOCAL GOVERNING AUTHORITY. THE CONTRACTOR SHALL BE AWARE THAT ALL CURRENT MSHA AND SITE SPECIFIC TRAINING AND SAFETY REQUIREMENTS SHALL BE ADHERED TO WHEN WORK IS CONDUCTED ON LOCAL MINING COMPANY PROPERTIES.
15. UPON COMPLETION OF WORK THE CONTRACTOR SHALL FINISH GRADE ALL DISTURBED AREAS AND CLEANUP ALL CONSTRUCTION DEBRIS. THE CONDITION OF THE WORK SITE SHALL BE LEFT IN A CLEAN CONDITION FREE OF ALL CONSTRUCTION DEBRIS. ALL DISTURBED AREAS SHALL BE REGRADED BY THE CONTRACTOR. UPON REGRADING AND CLEANUP ALL DISTURBED AREAS SHALL BE RESEEDED BY HARROWING AND BROADCAST SEEDING, OR BY HYDROSEEDING. THE SEED MIX TO BE APPLIED BY THE CONTRACTOR SHALL INCLUDE: CRESTED WHEAT - 5.0 LBS/ACRE, BIG BLUE GRASS - 0.5 LBS/ACRE, INDIAN RICEGRASS - 1.0 LBS/ACRE, AND BASIN WILDRYE - 4.5 LBS/ACRE FOR A TOTAL MIXED SEED MASS OF 11.0 LBS/ACRE.
16. CONTRACTOR AT ALL TIME SHAL

C-3 - SITE PLAN

EXISTING FLOWLINE

PROPOSED ASPHALT PARKING 54'x18' – 6 STALLS

EMPLOYEE PARKING (6)

PATIO 570 GSF

EXISTING WATER STUB, LOCATION IS APPROXIMATE, FIELD VERIFY

ADA PARKING

4" TO FIRE RISER

1" DOMESTIC WATER

4" SANITARY SEWER

FIRE STATION 11,383 GSF

WEST APRON 7,500 GSF

EAST APRON 6,300 GSF

PROPOSED TRASH ENCLOSURE PAD 16'x12'

EXISTING SSMH RIM=4488.38

PROPOSED 20'x20' EMERGENCY GENERATOR PAD

EMERGENCY GENERATOR =400 GSF

5' SIDEWALK

6" SHOP DRAINS TO SAND/OIL SEPARATOR

TEMP. PARKING (4)

EXISTING STREET SIGN TO BE REMOVED

EXISTING UTILITY/ELEC BOX, PROTECT IN PLACE

EXISTING FIBER MARKER, PROTECT IN PLACE

EXISTING LIGHT POLE W/ BASE, PROTECT IN PLACE

EXISTING SSMH RIM=4499.64

ADA/VISITOR PARKING (OPTION)

EXISTING WATER BLOW-OFF VALVE, PROTECT IN PLACE

EXISTING UTILITY/ELEC BOX, PROTECT IN PLACE

EXISTING LIGHT POLE W/ BASE, PROTECT IN PLACE

EXISTING UTILITY/ELEC BOX, PROTECT IN PLACE

EXISTING WATER VALVES TOP OF NUT ELEV=4494.22

EXISTING FIRE HYDRANT ASSEMBLY W/ SHUT-OFF VALVE

EXISTING SSMH RIM=4496.75

PROPOSED MONUMENT SIGN 20 GSF

PRELIMINARY LOCATION OF PROPOSED SAND/OIL SEPARATOR

EXISTING GAS LINE FIELD VERIFY

EXISTING ELECTRIC FIELD VERIFY

EXISTING LIGHT POLE W/ BASE, PROTECT IN PLACE

EXISTING UTILITY/ELEC BOX, PROTECT IN PLACE

EXISTING SSMH RIM=4495.48

EXISTING SEWER MAIN 8"

EXISTING SSMH RIM=4488.38

EXISTING WATERMAIN

N GENE L JONES WAY

EXISTING FLOWLINE

EXISTING DRAINAGE SWALE TO BE RE-ALIGNED AROUND PROPOSED SITE

EXISTING LIGHT POLE W/ UTILITY/ELEC BOX, PROTECT IN PLACE

EXISTING FIBER MARKER, PROTECT IN PLACE

26.00

N

1" = 20'

0 20 40 60 80 100

SUMMIT ENGINEERING CORPORATION
1150 LAMOILLE HIGHWAY, ELKO, NV, 89801
PHONE:(775) 738-8058 FAX:(775) 747-8559

Copyright SUMMIT ENG 2022

REV.	DATE	DESCRIPTION	BY	APP'D
1	06-23-2022	CITY OF ELKO REDLINES	SA	NIB

PRELIMINARY SITE PLAN
CITY OF WEST WENDOVER ~ FIRE STATION
SITE PLAN

WENDOVER ELKO COUNTY NEVADA

DESIGNED BY: NIB
CHECKED BY: NIB

SCALE
HORIZ: 1
VERT: 1" = 20'

JOB NO: 3-82965

SHEET C-3 OF 4

N:\DWGS\82965_W\WendoverFireStat\Civil\WWendoverFireStaSiteMap.DWG - 9:57 AM * 08-NOV-2022

FIRE STATION
11,383± GSF
FF=4500.65

N GENE L JONES WAY

ROCK

EXISTING LIGHT POLE W/ UTILITY/ELEC BOX, PROTECT IN PLACE

EXISTING FIBER MARKER, PROTECT IN PLACE

N

1" = 20'

0 20 40 60 80 100

SUMMIT ENGINEERING CORPORATION
1150 LAMOILLE HIGHWAY, ELKO, NV, 89801
PHONE:(775) 738-8058 FAX:(775) 747-8559

Copyright SUMMIT ENG 2022

REV.	DATE	DESCRIPTION	BY	APP'D
1	06-23-2022	CITY OF ELKO REDLINES	SA	NIB

PRELIMINARY SITE PLAN
CITY OF WEST WENDOVER ~ FIRE STATION
GRADING PLAN

WENDOVER ELKO COUNTY NEVADA

DESIGNED BY: NIB
CHECKED BY: NIB

SCALE
HORIZ: 1
VERT: 1" = 20'

JOB NO: 3-82965

SHEET C-4 OF 7

N:\DWGS\J82965_W\WendoverFireSta\Civil\WWendoverFireStaSiteMap.DWG ~ 9:57 AM ~ 08-NOV-2022

SUMMIT ENGINEERING CORPORATION
1150 LAMOILLE HIGHWAY, ELKO, NV, 89801
PHONE:(775) 738-8058 FAX:(775) 747-8559

Copyright SUMMIT ENG 2022

REV.	DATE	DESCRIPTION	BY	APP'D
1	06-23-2022	CITY OF ELKO REDLINES	SA	NB

PRELIMINARY SITE PLAN
CITY OF WEST WENDOVER ~ FIRE STATION
UTILITY PLAN

WENDOVER — ELKO COUNTY — NEVADA

EXISTING FLOWLINE
PROPOSED ASPHALT PARKING 54'x18' – 6 STALLS
EXISTING WATER STUB, LOCATION IS APPROXIMATE, FIELD VERIFY
PROPOSED 6" SS STUB ±5 FROM BLDG FACE IE 6"=498.00
CONST 4" HOT TAP FOR FIRE RISER TO BLDG. W/ THRUST BLOCK – 40 LF
CONST 3" HOT TAP FOR 3" DOMESTIC SERVICE TO BLDG. FACE – 35 LF
CONST ±75 LF OF SDR 35 PVC SS PIPE TO BLDG. S=7.04% – V(f)=8.20 fps
TO FIRE RISER
3" DOMESTIC WATER
6" SANITARY SEWER
FIRE STATION 11,383± GSF FF=4500.65
EX. UTILITY/ELEC BOX, TO BE REMOVED AND RELOCATED
EXISTING FIBER MARKER, PROTECT IN PLACE
CONST TRAFFIC RATED CLEAN OUT IE 6" @ BLDG.=495.50 IE 6"@ TEE=495.00
8" SHOP DRAINS TO SAND / OIL SEPARATOR
CONST CLEANOUT IE 6" @ BLDG.=493.95
PROPOSED MONUMENT SIGN 20 GSF
PROPOSED TRASH ENCLOSURE PAD 16'x12'
PROPOSED HYDRANT AND 6" GATE VALVE
CONST ±92 LF OF DR18 6" C900 LINE TO HYDRANT
CONST ±70 LF OF 18" N–12 HDPE SMOOTH INTERIOR SD PIPE SLOPE=2.00%
CONST TYPE 1 48"ø SSMH RIM=500.75 IE IN 8"(e)=493.90 IE OUT 8"(e)=493.80
CONST 8" ENDCAP WITH THRUST BLOCK CONST FLUSH VALVE ASSEMBLY (REF DET SHT)
CONST 8" x 6" TEE W/ THRUST BLOCK
CONST 2241 LF OF 8" SDR 35 PVC PIPE S=2.08% - V(f)=5.40 fps
CONST 4264 LF OF 8" DR18 C900 PIPE
EXISTING FLOWLINE
EXISTING GAS LINE FIELD VERIFY
EXISTING ELECTRIC FIELD VERIFY
EXISTING LIGHT POLE W/ UTILITY/ELEC BOX, PROTECT IN PLACE
EXISTING FIBER MARKER, PROTECT IN PLACE
N GENE L JONES WAY
EXISTING WATER MAIN
EXISTING SEWER MAIN
EXISTING LIGHT POLE W/ BASE, PROTECT IN PLACE
EXISTING UTILITY/ELEC BOX, PROTECT IN PLACE
EXISTING WATER BLOW–OFF VALVE, PROTECT IN PLACE
EXISTING LIGHT POLE W/ BASE, PROTECT IN PLACE
EXISTING SSMH RIM=499.64 IE OUT 8"(e)=491.16
EXISTING UTILITY/ELEC BOX, PROTECT IN PLACE
PROPOSED 6" SS TEE INSERT–A–TEE IE 6"(e)=±490.70
EXISTING WATER VALVES TOP OF NUT ELEV=494.22
EXISTING FIRE HYDRANT ASSEMBLY W/ SHUT–OFF VALVE TO REMAIN PROTECT IN PLACE
EXISTING LIGHT POLE W/ BASE, TO BE REMOVED AND RELOCATED
EXISTING SSMH RIM=496.75 IE IN 8"(e)=487.95 IE OUT 8"(e)=487.90
CONST JENSEN PRECAST 500 GAL SAN/OIL SEPARATOR IE IN 6"=493.85 IE OUT 6"=493.60 (REF DET SHT)
CONST TYPE 1 48"ø SSMH RIM=496.05 IE IN 8"(e)=488.75 IE OUT 8"(e)=488.65
CONST 8" HOT TAP FOR WATER MAIN EXTENSION W/ THRUST BLOCK 1–8" GATE VALVE (FLG x MJ) COORDINATE WITH CITY OF WEST WENDOVER UTILITY DEPT.
SAWCUT, REMOVE, DISPOSE AND PATCH BACK ±350 SF OF AC PAVING, MATCH EX. THICKNESS AND ELEVATION
EXISTING SSMH RIM=495.48
EXISTING SSMH RIM=4488.38 IE IN 8"(e)=478.53 (W) IE IN 8"(e)=478.54 (N) IE OUT 8"(e)=478.50 (E)

N
1" = 20'
0 20 40 60 80 100

N
1" = 20'
0 20 40 60 80 100

DESIGNED BY:	NIB
CHECKED BY:	NIB
SCALE	
HORIZ:	1
VERT:	1" = 20'
JOB NO:	3-82965

SHEET C-5 OF 7

N:\DWGS\82965_WWendoverFireStat\Civil\WWendoverFireStatBMap.DWG - 9:57 AM * 08-NOV-2022

CONST. ±975 SF OF AC PARKING 3" OF TYPE 2 AC ON 9" OF TYPE 2 BASE COMPACTED TO 95% MDD

CONST ±7,975 SF OF 8" THICK CONC. ON 6" OF TYPE 2 BASE COMPACTED TO 95% MDD W/ #5 REBAR @ 18" O.C. EACH WAY

PROPOSED TRASH ENCLOSURE PAD 16'x12', 6" THICK CONC ON 6" OF TYPE 2 BASE COMPACTED TO 95% MDD

CONST. ±575 SF OF 4" THICK CONC. ON 4" OF TYPE 2 BASE COMPACTED TO 95% MDD

CONST ±5,550 SF OF AC PARKING 3" OF TYPE 2 AC ON 9" OF TYPE 2 BASE COMPACTED TO 95% MDD (REF DET SHT)

CONST ±26 & ±27 LF OF 6' WIDE, 4" THICK CONC SIDEWALK ON 4" OF TYPE 2 BASE COMPACTED TO 95% MDD

FIRE STATION
11,383± GSF
FF=4500.65

EXISTING STREET SIGN TO REMAIN PROTECT IN PLACE

CONST. TYPE 3 CURB RAMPS W/ DETECTABLE WARNING MARKERS FOR ADA ACCESS

PROPOSED 20' x 20' EMERGENCY GENERATOR PAD 6" THICK CONC ON 6" OF TYPE 2 BASE COMPACTED TO 95% MDD

PROPOSED ±52' LF OF 5' WIDE SIDEWALK 4" THICK CONC ON 4" OF TYPE 2 BASE COMPACTED TO 95% MDD

CONST ±115 LF OF 6' WIDE, 6" THICK DEPRESSED CONC SIDEWALK ON 6" OF TYPE 2 BASE W/ #5 REBAR @ 18" O.C. EACH WAY

CONST ±6,550 SF OF 8" THICK CONC. ON 6" OF TYPE 2 BASE W/ #5 REBAR @ 18" O.C. EACH WAY

EXISTING CURB, GUTTER & SIDEWALK TO REMAIN FIELD VERIFY

N GENE L JONES WAY

CONSY ±5,750 SF OF AC PAVING 3" OF TYPE 2 AC ON 9" OF TYPE 2 BASE COMPACTED TO 95% MDD

CONST ±200 & ±125 LF OF 5' WIDE, 4" THICK CONC SIDEWALK ON 4" OF TYPE 2 BASE COMPACTED TO 95% MDD

CONST. TYPE 1 CURB RAMPS W/ DETECTABLE WARNING MARKERS FOR ADA ACCESS

EXISTING LIGHT POLE W/ UTILITY/ELEC BOX, PROTECT IN PLACE

EXISTING FIBER MARKER, PROTECT IN PLACE

N

1" = 20'

0 20 40 60 80 100

SUMMIT ENGINEERING CORPORATION
1150 LAMOILLE HIGHWAY, ELKO, NV, 89801
PHONE:(775) 738-8058 FAX:(775) 747-8559

Copyright SUMMIT ENG 2022

REV.	DATE	DESCRIPTION	BY	APP'D
1	06-23-2022	CITY OF ELKO REDLINES	SA	NIB

PRELIMINARY SITE PLAN
CITY OF WEST WENDOVER ~ FIRE STATION
PARKING & PAVING PLAN

WENDOVER ELKO COUNTY NEVADA

DESIGNED BY: NIB
CHECKED BY: NIB
SCALE
HORIZ: 1
VERT: 1" = 20'
JOB NO: 3-82965

SHEET C-6 OF 7

N:\DWGS\J82965_WWendoverFireSta\Civil\WWendoverFireStaBMap.DWG ~ 9:57 AM ~ 08-NOV-2022

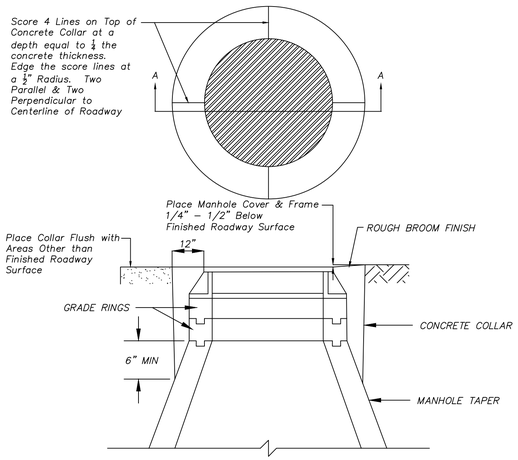

SECTION A–A

NOTES:

1. CONCRETE SHALL MEET THE REQUIREMENTS OF SECTION 337.10 OF THE LATEST EDITION OF THE STANDARD SPECIFICATIONS FOR PUBLIC WORKS CONSTRUCTION.
2. MANHOLE COVER & FRAME SHALL BE SET ¼" TO ½" BELOW FINISHED CONCRETE OR BITUMINOUS SURFACE. MANHOLE COLLARS IN ALL OTHER AREAS SHALL BE SET FLUSH WITH FINISHED GRADE, UNLESS OTHERWISE SPECIFIED.
3. CONCRETE COLLAR IS REQUIRED WHEN MANHOLE IS NOT LOCATED IN CONCRETE OR BITUMINOUS SURFACE.
4. REFER TO DETAIL SHEET (MANHOLE – GENERAL NOTES) FOR ADDITIONAL INFORMATION.

1 MANHOLE COLLAR DETAIL
NOT TO SCALE

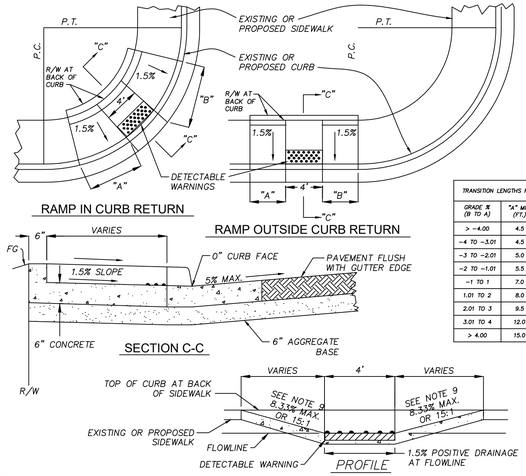

TRANSITION LENGTHS FOR 8.33% SLOPE		
GRADE % (R TO A)	"A" MIN. (FT.)	"B" MIN. (FT.)
> –4.00	4.5	15.0
–4 TO –3.01	4.5	12.0
–3 TO –2.01	5.0	9.5
–2 TO –1.01	5.5	8.0
–1 TO 1	7.0	7.0
1.01 TO 2	8.0	5.5
2.01 TO 3	9.5	5.0
3.01 TO 4	12.0	4.5
> 4.00	15.0	4.5

NOTES
1. CONCRETE SHALL MEET THE REQUIREMENTS OF SECTION 337.10 OF THE LATEST EDITION OF THE STANDARD SPECIFICATIONS FOR PUBLIC WORKS CONSTRUCTION.
2. AGGREGATE BASE MATERIAL SHALL MEET THE REQUIREMENTS OF SECTION 302 & 308 OF THE LATEST EDITION OF THE STANDARD SPECIFICATIONS FOR PUBLIC WORKS CONSTRUCTION.
3. CURB RAMP WITHIN CURB RETURN SHALL BE LOCATED AT THE MIDPOINT OF CURB RETURN.
4. RAMPS SHALL BE CONSTRUCTED WITH A ROUGH BROOM FINISH TRANSVERSE TO THE SLOPE OF THE RAMP.
5. WHEN CONSTRUCTING A RAMP WHERE CURB & GUTTER EXIST, COMPLETELY REMOVE INTERFERING PORTIONS OF EXISTING CURB & GUTTER. LOCATION OF CURB RAMP SHALL BE APPROVED BY THE CITY OF WEST WENDOVER PRIOR TO INSTALLATION.
6. DETECTABLE WARNINGS SHALL BE YELLOW AND CONSIST OF RAISED TRUNCATED DOMES AND PLACED AT THE BOTTOM PORTION OF THE RAMP.
7. CROSS SLOPE OF SIDEWALK AND RAMP SURFACES SHALL NOT EXCEED 2%.
8. CURB RAMPS & DETECTABLE WARNINGS SHALL MEET THE REQUIREMENTS OF 28 CFR PART 36, ADA STANDARDS FOR ACCESSIBLE DESIGN.
9. PER THE PROWAG, SECTION 304.3.2, THE RUNNING SLOPE OF A CURB RAMP SHALL BE 8.33% MAXIMUM, BUT SHALL NOT REQUIRE THE RAMP LENGTH TO EXCEED 15.0 FEET. ON STEEP STREETS OR INTERSECTIONS THE TRANSITIION TO FULL HEIGHT CURB MAY HAPPEN IN THE FIRST 15' MINIMUM AND THE RESULTING SLOPE OF THE RAMP IS ALLOWED TO EXCEED 8.33%

2 TYPE I CURB RAMP
NOT TO SCALE

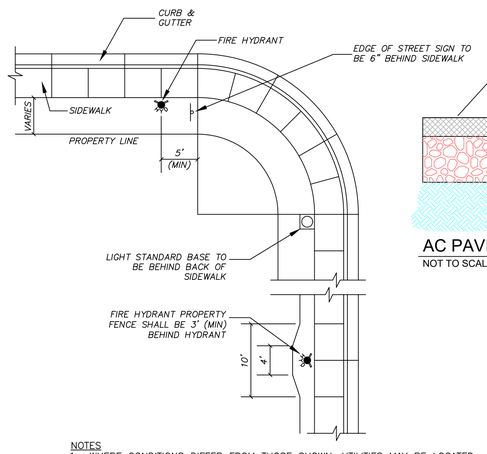

NOTES
1. WHERE CONDITIONS DIFFER FROM THOSE SHOWN, UTILITIES MAY BE LOCATED WITHIN THE SIDEWALK SECTION WITH THE APPROVAL OF THE GOVERNING AGENCY.
2. WHEN FIRE HYDRANTS AND LIGHT STANDARDS ARE IN THE SAME VICINITY, THEY SHALL BE SEPARATED BY AT LEAST 5 FEET.
3. WHEN STOP SIGN IS LOCATED AT P.C., STREET SIGNS SHALL BE MOUNTED ON SAME POLE.
4. STREET SIGNS AT MID–RETURN SHALL BE LOCATED ADJACENT TO A PEDESTRIAN CURB RAMP, IF APPLICABLE.

MAT
5. WHERE CURB AND GUTTER DO NOT EXIST, EDGE OF STOP SIGN SHALL BE PLACED AT THE BEGINNING OF THE CURVE, 6 FEET FROM THE EDGE OF PAVEMENT.

3 STREET LIGHT, HYDRANT, & SIGN LOCATION
NOT TO SCALE

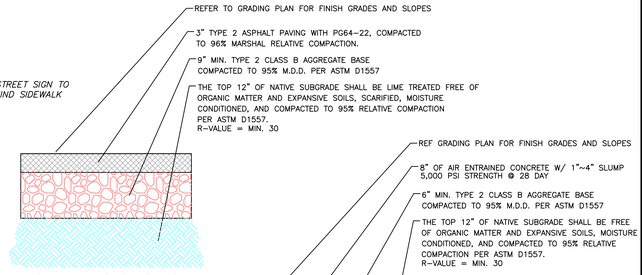

AC PAVING SECTION
NOT TO SCALE

CONCRETE PAVING SECTION
NOT TO SCALE

NOTES
1. ASPHALT PAVING SHALL BE TYPE 3 (1/2 INCH SIZE), 50 BLOW, MARSHAL MIX DESIGN, WITH 3 TO 5% AIR VOIDS, AND SHALL BE COMPACTED TO 96% MARSHALL RELATIVE COMPACTION. THE CONTRACTOR SHALL SUBMIT THE PROPOSED ASPHALT MIX DESIGN TO THE GEOTECHNICAL ENGINEER FOR APPROVAL, A MINIMUM OF 1 WEEK PRIOR TO PAVING.
2. AGGREGATE BASE SHALL BE MOISTURE CONDITIONED TO WITHIN 2% OF OPTIMUM, PLACED IN ONE LIFT, AND COMPACTED TO 95% OF MAXIMUM DRY DENSITY PER ASTM D1557.
3. THE SLOPE OF THE FINISH SURFACE SHALL BE IN ACCORDANCE WITH THE ELEVATIONS AND SLOPES ON THE GRADING PLAN, BUT IN NO INSTANCE SHALL BE LESS THAN 1%.
4. NEW ASPHALT PAVING FINISH SURFACE SHALL BE FLUSH WITH EXISTING ASPHALT PAVING SURFACE, MATCHING GRADE AT LIMITS OF REMOVAL AND REPLACEMENT.

4 AC PAVING SECTION
NOT TO SCALE

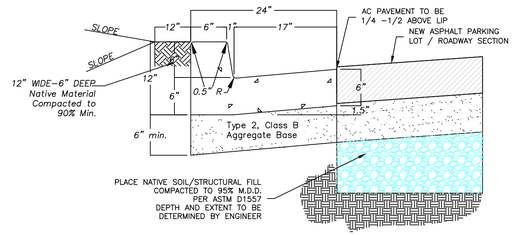

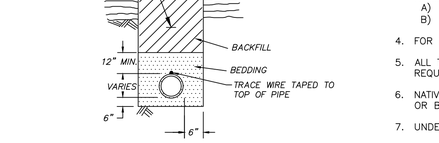

DUCTILE IRON PIPE, PVC, PE & HDPE PIPE

NOTES
1. WATER DENSIFIED BACKFILL AND TUNNELING SHALL NOT BE ALLOWED.
2. BACKFILL SHALL MEET THE REQUIREMENTS FOR CLASS "E" BACKFILL WITH NO ROCKS SIZED OVER 4", COMPACTED IN 6" (MAX.) LIFT TO 90% (MIN.) RELATIVE COMPACTION.
3. 3. BEDDING MATERIAL FOR THE FOLLOWING PIPE SHALL MEET THE REQUIREMENTS OF SECTION 200 & 305 OF THE LATEST EDITION OF THE STANDARD SPECIFICATIONS FOR PUBLIC WORKS CONSTRUCTION AND COMPACTED TO A MINIMUM 90% RELATIVE COMPACTION.
   A) DUCTILE IRON PIPE – CLASS "C"
   B) ALL OTHER PIPE – CLASS "A"
4. FOR TRENCHES & EXCAVATIONS LOCATED WITHIN ROADWAY SECTION, SEE PAVEMENT PATCH DETAIL.
5. ALL TRENCHES AND EXCAVATIONS SHALL CONFORM TO THE LATEST EDITION OF O.S.H.A. AND M.U.T.C.D. REQUIREMENTS.
6. NATIVE MATERIAL MUST BE APPROVED BY THE CITY OF WEST WENDOVER ENGINEER PRIOR TO USING AS BACKFILL OR BEDDING.
7. UNDERGROUND WARNING TAPE SHALL BE METALLIC AND APPROPRIATELY LABELED AND COLORED.

5 TRENCH DETAIL
NOT TO SCALE

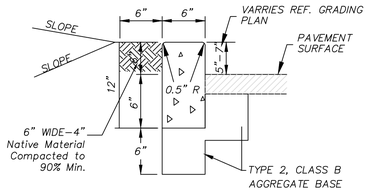

PARKING LOT

NOTES
1. CONCRETE SHALL MEET THE REQUIREMENTS OF SECTION 337.10 OF THE LATEST EDITION OF THE STANDARD SPECIFICATIONS FOR PUBLIC WORKS CONSTRUCTION.
2. AGGREGATE BASE MATERIAL SHALL MEET THE REQUIREMENTS OF SECTIONS 302 & 308 OF THE LATEST EDITION OF THE STANDARD SPECIFICATIONS FOR PUBLIC WORKS CONSTRUCTION.
3. ALL CONCRETE CURB SHALL HAVE 1/2" EXPANSION JOINTS EVERY 90 FEET AND AT ALL CURB RETURNS. WEAKENED PLANE JOINTS SHALL BE EVERY 10 FEET. FOR BARRIER CURB ONLY, PLACE WEAKENED PLANE JOINTS EVERY 5 FEET.
4. GLUE DOWN THE TYPE 2 MEDIAN CURB TO THE PAVEMENT SURFACE USING EPOXY CEMENT.

6 PARKING LOT TYPE 1 POST CURB
NOT TO SCALE

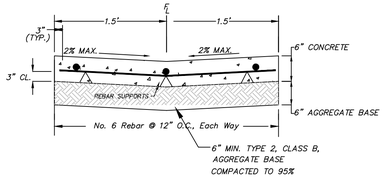

NOTES
1. CONCRETE SHALL MEET THE REQUIREMENTS OF SECTION 337.10 OF THE LATEST EDITION OF THE STANDARD SPECIFICATIONS FOR PUBLIC WORKS CONSTRUCTION.
2. AGGREGATE BASE MATERIAL SHALL MEET THE REQUIREMENTS OF SECTIONS 302 & 308 OF THE LATEST EDITION OF THE STANDARD SPECIFICATIONS FOR PUBLIC WORKS CONSTRUCTION
3. REINFORCING STEEL SHALL MEET THE REQUIREMENTS OF SECTION 326 OF THE LATEST EDITION OF THE STANDARD SPECIFICATIONS FOR PUBLIC WORKS CONSTRUCTION.
4. PLANTMIX BITUMINOUS SURFACE SHALL BE ½" TO ¾" ABOVE VALLEY GUTTER. ALL OTHER SURFACES TO BE FLUSH WITH VALLEY GUTTER.
5. IF 2% CROSS SLOPE CAN NOT BE ATTAINED ON THE VALLEY GUTTER, PROPOSED CROSS SLOPE SHALL BE APPROVED BY THE CITY OF WEST WENDOVER.
6. CURB RAMPS & DETECTABLE WARNINGS SHALL MEET THE REQUIREMENTS OF THE LATEST EDITION OF THE ADAAG.
7. DRIVEWAY GEOMETRICS SHALL GO TO THE P.C. AND THE P.T.
8. MAINTAIN POSITIVE DRAINAGE IN CROSSWALK AREAS AND PEDESTRIAN ROUTES TO PREVENT PONDING.
9. CROSS SLOPE OF SIDEWALK AND CURB RAMP SURFACES SHALL NOT EXCEED 2%.
10. WHEN CONSTRUCTING WHERE CURB & GUTTER ALREADY EXIST, COMPLETELY REMOVE INTERFERING PORTIONS OF EXISTING CURB & GUTTER. LOCATION OF CURB RAMP SHALL BE APPROVED BY THE CITY OF WEST WENDOVER PRIOR TO INSTALLATION.
11. DETECTABLE WARNINGS SHALL BE YELLOW AND CONSIST OF RAISED TRUNCATED DOMES AND PLACED AT THE BOTTOM PORTION OF THE RAMP.
12. CURB RAMPS SHALL BE CONSTRUCTED WITH A ROUGH BROOM FINISH TRANSVERSE TO THE SLOPE OF THE RAMP.
13. PLANTMIX BITUMINOUS SURFACE SHALL BE FLUSH WITH THE EDGE OF THE GUTTER PAN IN THE AREA OF THE CURB RAMP.

7 3' P.C.C VALLEY GUTTER DETAIL
NOT TO SCALE

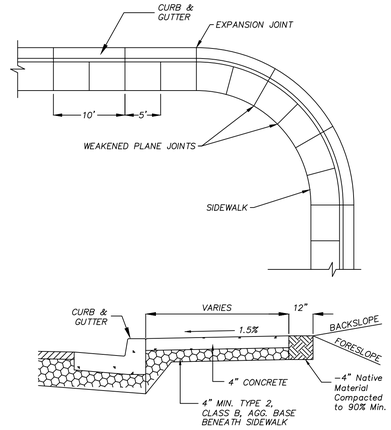

NOTES
1. CONCRETE SHALL MEET THE REQUIREMENTS OF SECTION 337.10 OF THE LATEST EDITION OF THE STANDARD SPECIFICATIONS FOR PUBLIC WORKS CONSTRUCTION.
2. ALL CONCRETE SIDEWALK SHALL HAVE ½ " EXPANSION JOINTS EVERY 30 FEET AND AT ALL CURB RETURNS. WEAKENED PLANE JOINTS SHALL BE EVERY 5 FEET AND COINCIDE WITH THE ADJACENT CURB AND GUTTER WEAKENED PLANE JOINTS. THE WEAKENED PLANE JOINTS PLACED EVERY 5' IN THE SIDEWALK MAY BE SAWCUT WITH CITY OF WEST WENDOVER APPROVAL AND SHALL MEET THE REQUIREMENTS OF SECTION 314 OF THE LATEST EDITION OF THE STANDARD SPECIFICATIONS FOR PUBLIC WORKS CONSTRUCTION.
3. AGGREGATE BASE MATERIAL SHALL MEET THE REQUIREMENTS OF SECTION 302 & 308 OF THE LATEST EDITION OF THE STANDARD SPECIFICATIONS FOR PUBLIC WORKS CONSTRUCTION.
4. FORESLOPES & BACKSLOPES SHALL BE APPROVED BY THE CITY OF WEST WENDOVER PRIOR TO CONSTRUCTING.
5. CROSS SLOPE OF SIDEWALK SHALL NOT EXCEED 2%.

8 P.C.C. SIDEWALK DETAIL
NOT TO SCALE

NOTES
1. CONCRETE SHALL MEET THE REQUIREMENTS OF SECTION 337.10 OF THE LATEST EDITION OF THE STANDARD SPECIFICATIONS FOR PUBLIC WORKS CONSTRUCTION.
2. AGGREGATE BASE MATERIAL SHALL MEET THE REQUIREMENTS OF SECTIONS 302 & 308 OF THE LATEST EDITION OF THE STANDARD SPECIFICATIONS FOR PUBLIC WORKS CONSTRUCTION.
3. ALL CONCRETE CURB AND GUTTER SHALL HAVE ½" EXPANSION JOINTS EVERY 90 FEET AND AT ALL CURB RETURNS. WEAKENED PLANE JOINTS SHALL BE EVERY 10 FEET.
4. PLANTMIX BITUMINOUS SURFACE SHALL BE ½" TO ½" ABOVE LIP OF GUTTER PAN.

5 CURB & GUTTER DETAIL
NOT TO SCALE

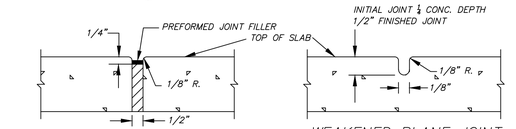

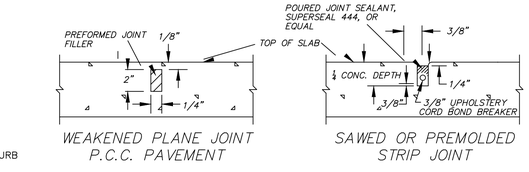

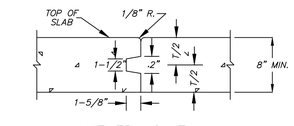

KEYED JOINT

9 P.C.C. JOINT DETAIL

SUMMIT ENGINEERING CORPORATION
1150 LAMOILLE HIGHWAY, ELKO, NV, 89801
PHONE:(775) 738-8068 FAX:(775) 747-8559

Copyright SUMMIT ENG 2022

REV.	DATE	DESCRIPTION	BY	APP'D
1	06-23-2022	CITY OF ELKO REDLINES	SA	NIB

CIVIL IMPROVEMENT PLANS FOR
CITY OF WEST WENDOVER ~ FIRE STATION
DETAIL SHEET
WENDOVER ELKO COUNTY NEVADA

DESIGNED BY: NIB
CHECKED BY: NIB
SCALE
HORIZ: NONE
VERT:
JOB NO: 3-82965

SHEET C-7 OF 7

N:\DWGS\82965_WWendoverFireSta\Civil\WWendoverFireStaBlkMap.DWG ~ 9:57 AM ~ 08-NOV-2022



1 OVERALL SITE PLAN
SCALE: 1" = 20'-0"

NORTH 0' 10' 20' 40'

GENERAL NOTES

1. CONTRACTOR TO VERIFY DIMENSIONS ON FIELD PRIOR TO COMMENCEMENT OF ANY SITE WORK. DO NOT SCALE DRAWINGS.
2. REFER TO CIVIL DRAWINGS FOR ADDITIONAL INFORMATION ON SCOPE OF WORK AND LIMIT OF CONSTRUCTION.
3. REFER TO CIVIL DRAWINGS FOR PARKING, STREET & CURB DIMENSIONS, AND STRIPING INFORMATION.
4. REFER TO LANDSCAPE DRAWINGS FOR ADDITIONAL SITE INFORMATION INCLUDING SITE FURNISHINGS AND HARDSCAPE PLANS.
5. REFER TO CIVIL DRAWINGS FOR HORIZONTAL CONTROL.
6. REFER TO CIVIL DRAWINGS FOR STREET DEVELOPMENT OUTSIDE OF PROPERTY LINE.
7. ALL SITE / RETAINING WALLS TO HAVE ANTI-GRAFFITI COATING, UNLESS NOTED OTHERWISE.
8. REFER TO SHEET A2.01 FOR ROOM FINISH SCHEDULE AND MATERIAL SCHEDULE.

KEYNOTES

tsk
314 South Water Street,
Suite 100
Henderson, NV 89015
phone: 702.456.3000
fax: 702.898.6209
www.tska.com

THESE DRAWINGS AND SPECIFICATIONS ARE THE PROPERTY OF TATE SNYDER KIMSEY ARCHITECTS AND MAY NOT BE REPRODUCED OR USED FOR ANY PURPOSE WITHOUT THE ARCHITECTS WRITTEN CONSENT. AS INSTRUMENTS OF SERVICE, THESE DOCUMENTS ARE NOT FINAL AND READY FOR USE, AND THEREFORE NOT VALID, UNLESS THEY ARE SEALED, SIGNED AND DATED.

Copyright, Ltd 2023

Consultant

PLEASE RECYCLE

Project
WEST WENDOVER NEW FS #13

N. GENE L. JONES WAY, WEST WENDOVER, NV 89883

Job No: 22-002.00

Owner
CITY OF WEST WENDOVER

PHASE-1B DESIGN DEVELOPMENT

REVISIONS		
REV	DATE	DESCRIPTION

Sheet Title
OVERALL SITE PLAN

Date: MAY 3, 2023
Sheet No:
AS1.01

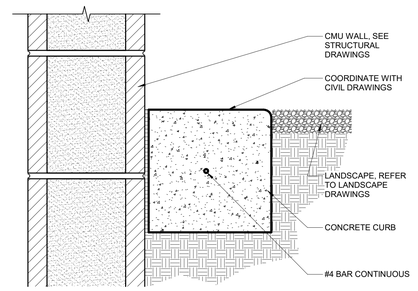

NOTE:
PROVIDE CONTROL JOINTS @ 10'-0" O.C., EXP. JOINTS @ 30'-0" O.C.

8 MOW CURB AT WALL / LANDSCAPE
SCALE: 3" = 1'-0"

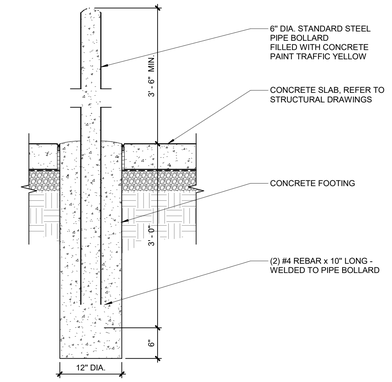

4 BUILDING BOLLARD
SCALE: 1" = 1'-0"

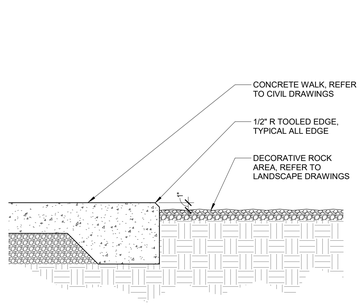

7 HARDSCAPE WELL TO CONCRETE
SCALE: 1 1/2" = 1'-0"

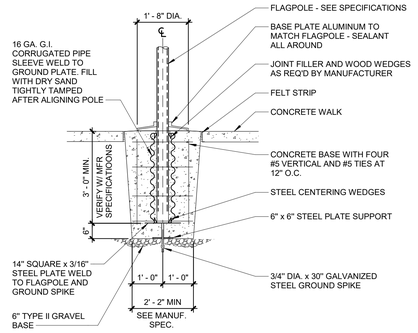

NOTE: CONCRETE FOOTING DIMENSIONS SHOWN ARE BASED UPON THE SPECIFIED FLAGPOLE MANUFACTURERS

3 FLAGPOLE FOOTING
SCALE: 1/2" = 1'-0"

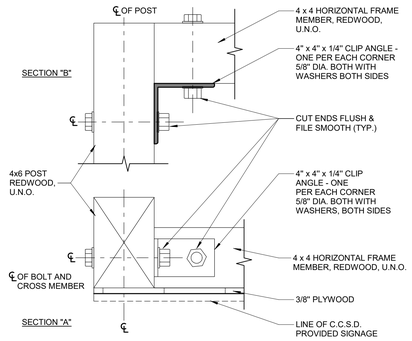

10 SIGN EDGE DETAIL
SCALE: 3" = 1'-0"

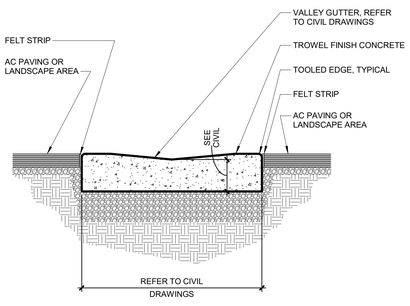

6 VALLEY GUTTER @ AC PAVING
SCALE: 1 1/2" = 1'-0"

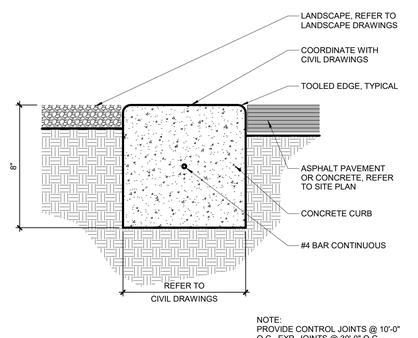

NOTE:
PROVIDE CONTROL JOINTS @ 10'-0" O.C., EXP. JOINTS @ 30'-0" O.C.

2 MOW CURB
SCALE: 3" = 1'-0"

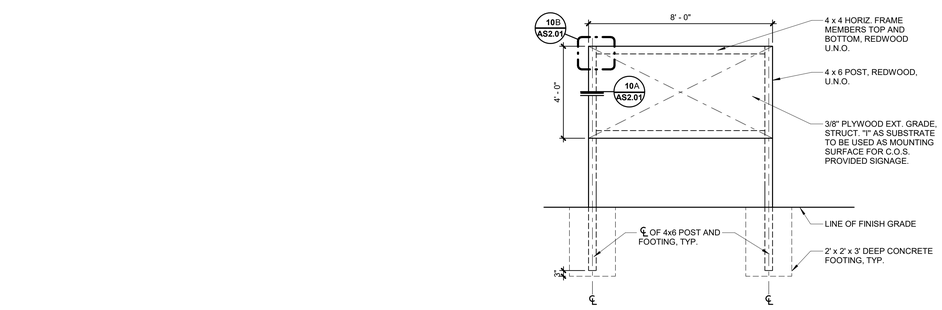

NOTES:
1. CREOSOTE TREAT 4x POST PRIOR TO EMBEDMENT INTO CONCRETE FOOTING.
2. PAINT SIGN FRAMING TO MATCH SIGN, U.N.O.
3. EDGE NAILING OF SIGNAGE: 10D @ 6" O.C., OR MACHINE WOOD SCREWS AS REQUIRED.
4. PROVIDE ONE SIGN LOCATED IN CONSTRUCTION AREA EACH PHASE.

9 CONSTRUCTION SIGN DETAIL
SCALE: 3/8" = 1'-0"

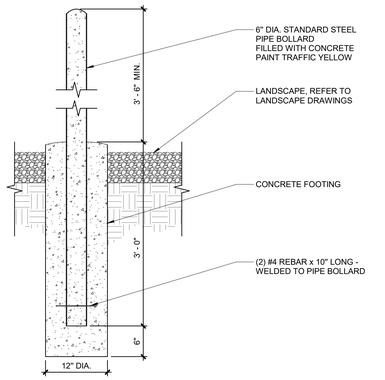

5 SITE BOLLARD
SCALE: 1" = 1'-0"

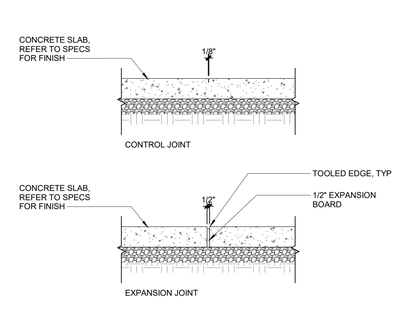

NOTE: SEE SITE PLAN FOR JOINT PATTERN AND STRUCTURAL DRAWINGS FOR MORE INFORMATION. SEE LANDSCAPE PLANS FOR OTHER EXTERIOR CONCRETE INFORMATION

1 JOINT DETAILS
SCALE: 1" = 1'-0"

tsk
314 South Water Street,
Suite 100
Henderson, NV 89015
phone: 702.456.3000
fax: 702.898.6209
www.tska.com

THESE DRAWINGS AND SPECIFICATIONS ARE THE PROPERTY OF TATE SNYDER KIMSEY ARCHITECTS AND MAY NOT BE REPRODUCED OR USED FOR ANY PURPOSE WITHOUT THE ARCHITECTS WRITTEN CONSENT. AS INSTRUMENTS OF SERVICE, THESE DOCUMENTS ARE NOT FINAL AND READY FOR USE, AND THEREFORE NOT VALID, UNLESS THEY ARE SEALED, SIGNED AND DATED.

Copyright, Ltd 2023

Consultant

PLEASE RECYCLE

Project
WEST WENDOVER NEW FS #13

N. GENE L. JONES WAY, WEST WENDOVER, NV 89883

Job No: 22-002.00

Owner
CITY OF WEST WENDOVER

PHASE-1B DESIGN DEVELOPMENT

REVISIONS		
REV	DATE	DESCRIPTION

Sheet Title
ARCHITECTURAL SITE DETAILS

Date: MAY 3, 2023
Sheet No:

AS2.01

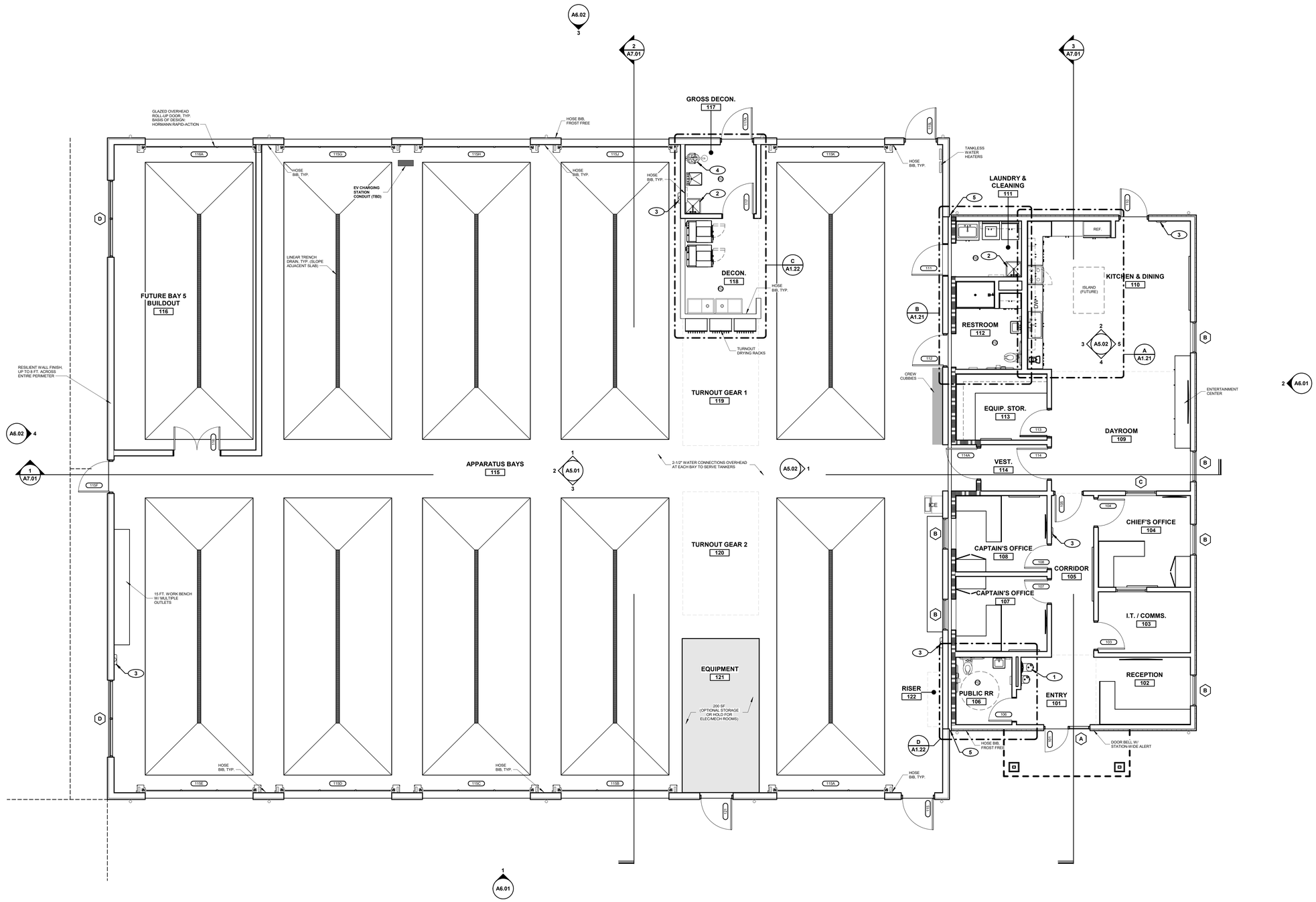

1 OVERALL FLOOR PLAN
SCALE: 3/16" = 1'-0"

NORTH 0' 3' 5' 11'

GENERAL NOTES

1. ALL DIMENSIONS ARE TAKEN FROM FACE OF STUD, MASONRY, OR CONCRETE UNLESS NOTED OTHERWISE.
2. REFER TO STRUCTURAL, MECHANICAL, PLUMBING, AND ELECTRICAL DRAWINGS FOR ADDITIONAL WORK NOT SHOWN ON THIS DRAWING.
3. REFER TO ELECTRICAL DRAWINGS FOR INFORMATION ON ELECTRICAL / DATA ROOMS.
4. REFER TO BUILDING SECTIONS AND WALL SECTIONS FOR WALL INFORMATION.
5. ALL EQUIPMENT (O.F.O.I. AND C.F.C.I.), SHALL COMPLY WITH ACCESSIBILITY REQUIREMENTS.
6. ALL PENETRATION IN PARTITION WALLS AT DATA / ELECTRICAL ROOMS TO BE FULLY SEALED TO MINIMIZE DUST INFILTRATION.
7. METAL WALL BACKING TO BE PROVIDED FOR ALL WALL MOUNTED EQUIPMENT.
8. CASTLE-CUT GYPSUM BOARD TO DECK AND SEAL AT AREAS WITHOUT CEILINGS.
9. FOR FLOORING TYPES AND CONTROL JOINTS: SEE FLOOR FINISH PLAN, ROOM FINISH SCHEDULE AND MATERIAL SCHEDULE.
10. REFER TO WALL PARTITION TYPES AND LIFE SAFETY DRAWINGS FOR RATING SEPARATIONS AND UL RATED DESIGN SHEET FOR REQUIRED FIRE RESISTIVE CONSTRUCTION.
11. FOR COMPLETE DIMENSIONS, REFER TO DIMENSION PLAN. FOR SIGNAGE LOCATIONS, REFER TO SIGNAGE PLAN.

KEYNOTES

1. DRINKING FOUNTAIN WITH BOTTLE FILLER, REFER TO PLUMBING DRAWINGS
2. MOP SINK, REFER TO PLUMBING DRAWINGS
3. FIRE EXTINGUISHER CABINET, REFER TO LIFE SAFETY PLAN
4. EMERGENCY EYE WASH AND SAFETY SHOWER STATION
5. SEISMIC JOINT, REFER TO STRUCTURAL DRAWINGS

tsk
314 South Water Street,
Suite 100
Henderson, NV 89015
phone: 702.456.3000
fax: 702.898.6209
www.tska.com

THESE DRAWINGS AND SPECIFICATIONS ARE THE PROPERTY OF TATE SNYDER KIMSEY ARCHITECTS AND MAY NOT BE REPRODUCED OR USED FOR ANY PURPOSE WITHOUT THE ARCHITECTS WRITTEN CONSENT. AS INSTRUMENTS OF SERVICE, THESE DOCUMENTS ARE NOT FINAL AND READY FOR USE, AND THEREFORE NOT VALID, UNLESS THEY ARE SEALED, SIGNED AND DATED.

Copyright, Ltd 2023

Consultant

PLEASE RECYCLE

Project
WEST WENDOVER NEW FS #13

N. GENE L. JONES WAY, WEST WENDOVER, NV 89883

Job No: 22-002.00

Owner
CITY OF WEST WENDOVER

PHASE-1B DESIGN DEVELOPMENT

REVISIONS

REV	DATE	DESCRIPTION

Sheet Title
OVERALL FLOOR PLAN

Date: MAY 3, 2023
Sheet No:
A1.01

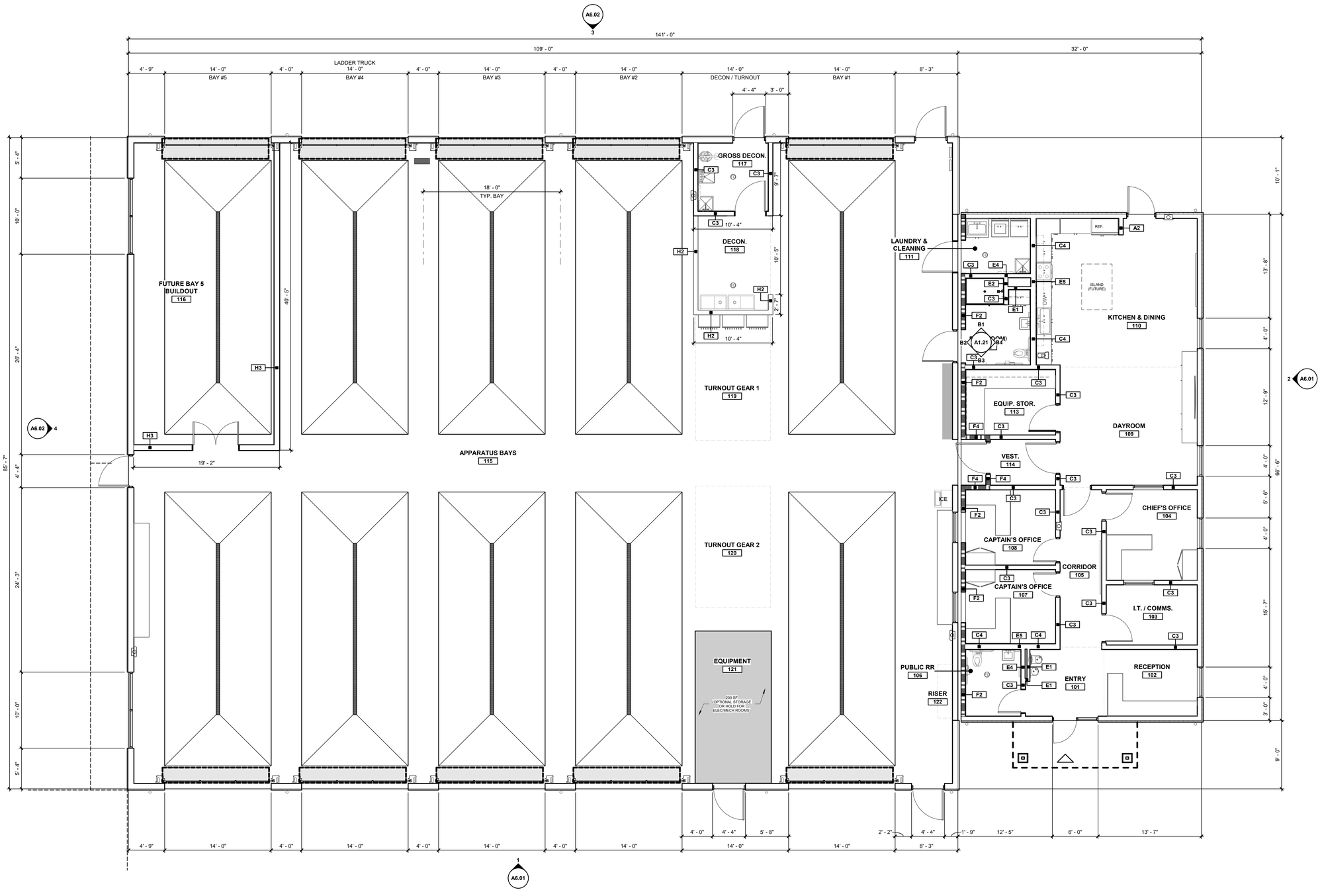

1 DIMENSION PLAN
SCALE: 3/16" = 1'-0"

NORTH 0' 3' 5' 11'

GENERAL NOTES

1. ALL DIMENSIONS ARE TAKEN FROM FACE OF STUD, MASONRY, CONCRETE, OR CENTERLINE OF COLUMN UNLESS NOTED OTHERWISE.
2. REFER TO ENLARGED RESTROOM PLANS FOR DIMENSIONS NOT SHOWN ON THE DIMENSION PLAN.
3. REFER TO SHEET A2.31 FOR PARTITION TYPES.
4. WHERE INTERIOR DOOR OPENINGS ARE NOT DIMENSIONED. INSTALL BUTT SIDE OF JAMB 6" FROM ADJACENT WALL, TYPICAL.
5. CONTRACTOR TO INSTALL ABUSE RESISTANT GYPSUM BOARD UP TO 6'-0" MINIMUM FROM FINISH FLOOR AT ALL CORRIDORS.
6. CONTRACTOR TO FIELD VERIFY ALL DIMENSIONS AND OPENINGS PRIOR TO INSTALLATION OF DOORS AND WINDOWS, ETC.

KEYNOTES

tsk
314 South Water Street,
Suite 100
Henderson, NV 89015
phone: 702.456.3000
fax: 702.898.6209
www.tska.com

THESE DRAWINGS AND SPECIFICATIONS ARE THE PROPERTY OF TATE SNYDER KIMSEY ARCHITECTS AND MAY NOT BE REPRODUCED OR USED FOR ANY PURPOSE WITHOUT THE ARCHITECTS WRITTEN CONSENT. AS INSTRUMENTS OF SERVICE, THESE DOCUMENTS ARE NOT FINAL AND READY FOR USE, AND THEREFORE NOT VALID, UNLESS THEY ARE SEALED, SIGNED AND DATED.
Copyright, Ltd 2023

Consultant

PLEASE RECYCLE

Project
WEST WENDOVER NEW FS #13

N. GENE L. JONES WAY, WEST WENDOVER, NV 89883

Job No: 22-002.00

Owner
CITY OF WEST WENDOVER

PHASE-1B DESIGN DEVELOPMENT

REVISIONS		
REV	DATE	DESCRIPTION

Sheet Title
DIMENSION PLAN

Date: MAY 3, 2023
Sheet No:
A1.11

TOILET ACCESSORIES SCHEDULE				
SYMBOL	DESCRIPTION	MANUFACTURER (BASIS OF DESIGN)	MFR NO.	PROVIDED/INSTALLED
TA-1	1 1/4" Diameter Stainless Steel Grab Bars with Snap Flange	Bobrick Washroom Equipment, Inc.	B-5806 Series	
TA-2	1 1/4" Diameter Stainless Steel Grab Bars with Snap Flange	Bobrick Washroom Equipment, Inc.	B-5806 Series	
TA-3	1 1/4" Diameter Stainless Steel Grab Bars with Snap Flange	Bobrick Washroom Equipment, Inc.	B-5806 Series	
TA-4	Contura Series Surface Mounted Soap Dispenser	Bobrick Washroom Equipment, Inc.	B-4112	
TA-5	Glass Mirror with Stainless Steel Angle Frame	Bobrick Washroom Equipment, Inc.	B-165 Series	
TA-6	Classic Series Surface Mounted Seat Cover Dispenser	Bobrick Washroom Equipment, Inc.	B-221	
TA-7	Paper Towel Dispenser And Waste Receptacle - Semi-Recessed	Bobrick Washroom Equipment, Inc.	B-38032	
TA-8	Surface-Mounted Multi-Roll Toilet Tissue Dispenser	Bobrick Washroom Equipment, Inc.	B-2888	
TA-9	Surface-Mounted Sanitary Napkin Disposal	Bobrick Washroom Equipment, Inc.	B-270	
TA-10	Stainless Steel Mop and Broom Holder	Bobrick Washroom Equipment, Inc.	B-223	

CASEWORK SCHEDULE				
	SIZE			
CDS	W	H	D	REMARKS
CW_Counter Top-L Shaped	34"	36"	24"	
100M	48"	31"	24"	
101	24"	31"	24"	
152	36"	36"	30"	
152	42"	36"	24"	
211	12"	36"	24"	
211	18"	36"	24"	
222	30"	36"	24"	
222	34"	36"	24"	
301	12"	30"	12"	
301	18"	30"	12"	
302	30"	12"	12"	
302	30"	30"	12"	
302	34"	30"	12"	
302	42"	22"	12"	
302	42"	30"	12"	
4021	48"	84"	24"	
402		84"		

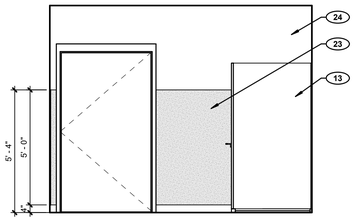

B2 RESTROOM 112 - WEST
SCALE: 3/8" = 1'-0"

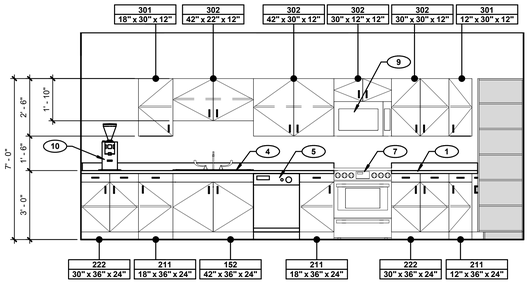

A2 KITCHEN & DINING 110 - WEST
SCALE: 3/8" = 1'-0"

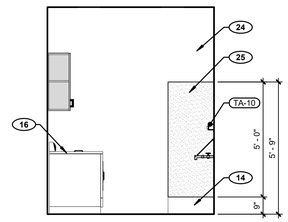

B8 LAUNDRY & CLEANING 111 - EAST
SCALE: 3/8" = 1'-0"

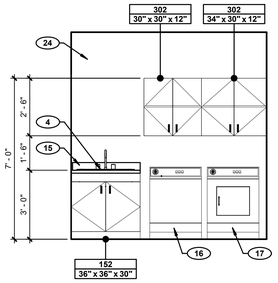

B5 LAUNDRY & CLEANING 111 - NORTH
SCALE: 3/8" = 1'-0"

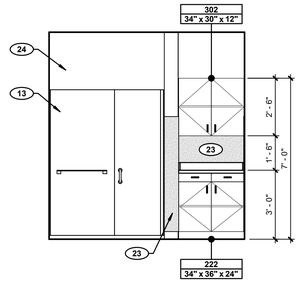

B1 RESTROOM 112 - NORTH
SCALE: 3/8" = 1'-0"

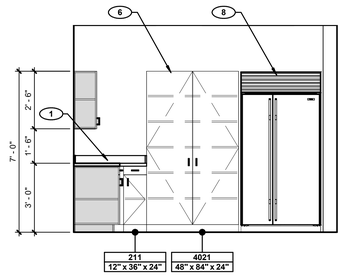

A1 KITCHEN & DINING 110 - NORTH
SCALE: 3/8" = 1'-0"

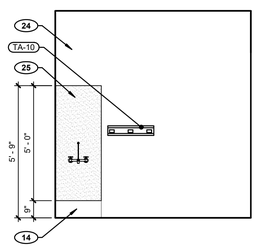

B7 LAUNDRY & CLEANING 111 - SOUTH
SCALE: 3/8" = 1'-0"

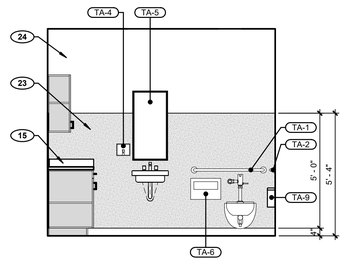

B4 RESTROOM 112 - EAST
SCALE: 3/8" = 1'-0"

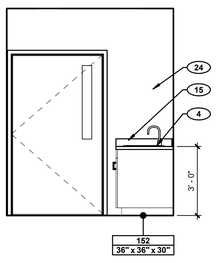

B6 LAUNDRY & CLEANING 111 - WEST
SCALE: 3/8" = 1'-0"

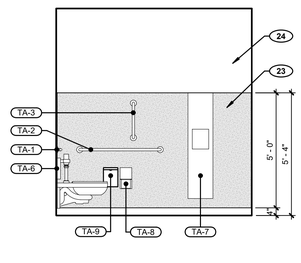

B3 RESTROOM 112 - SOUTH
SCALE: 3/8" = 1'-0"

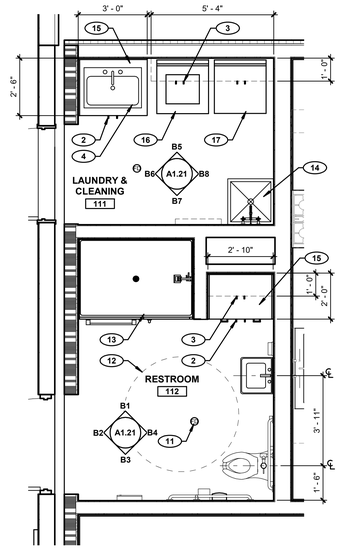

B ENLARGED PLAN - RESTROOM 112 / LAUNDRY & CLEANING 111
SCALE: 3/8" = 1'-0"

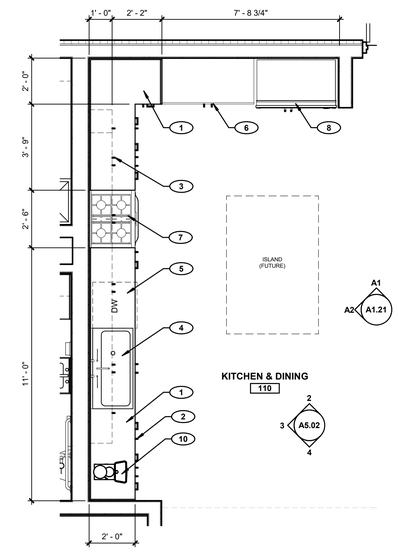

A ENLARGED PLAN - KITCHEN & DINING 110
SCALE: 3/8" = 1'-0"

GENERAL NOTES

1. REFER TO GENERAL ACCESSIBILITY DETAILS IN G1.0X SERIES FOR TYPICAL ACCESSIBLE FIXTURE, GRAB BAR AND ACCESSORY MOUNTING HEIGHTS AND LOCATIONS.
2. REFER TO SHEET A2.01 FOR ROOM FINISH SCHEDULE AND MATERIAL SCHEDULE.
3. REFER TO DIMENSION PLAN FOR WALL PARTITION TYPES. REFER TO SHEET A2.35 FOR PARTITION DETAILS.
4. REFER TO A8.XX SERIES FOR CASEWORK PLANS AND ELEVATIONS.
5. FURNITURE SHOWN FOR REFERENCE ONLY. FURNITURE NOT IN CONTRACT.
6. FD - FLOOR DRAINS TO SLOPE 1/8" PER FOOT.
7. "ACC" DENOTES AN ACCESSIBLE FIXTURE. REFER TO SHEET G1.03.
8. METAL WALL BACKING TO BE PROVIDED FOR ALL WALL MOUNTED EQUIPMENT.

KEYNOTES

1. STAINLESS STEEL COUNTERTOP WITH BACKSPLASH AND MARINE EDGE
2. BASE CABINET, REFER TO CASEWORK SCHEDULE AND DETAILS
3. UPPER CABINET, REFER TO CASEWORK SCHEDULE AND DETAILS
4. STAINLESS STEEL SINK, REFER TO PLUMBING DRAWINGS
5. DISHWASHER, REFER TO FURNITURE AND EQUIPMENT PLAN
6. TALL PANTRY CABINET, REFER TO CASEWORK SCHEDULE AND DETAILS
7. 30" GAS RANGE/OVEN
8. REFRIGERATOR, SUBZERO
9. OVER-THE-RANGE MICROWAVE OVEN, REFER TO FURNITURE AND EQUIPMENT PLAN
10. COFFEE STATION
11. FLOOR DRAIN, REFER TO PLUMBING DRAWINGS
12. 5' - 0" ACCESSIBLE TURN RADIUS, TYPICAL
13. PRE-FABRICATED SHOWER UNIT
14. MOP SINK, REFER TO PLUMBING DRAWINGS
15. SOLID SURFACE COUNTERTOP WITH BACKSPLASH
16. WASHER, REFER TO FURNITURE AND EQUIPMENT PLAN
17. DRYER, REFER TO FURNITURE AND EQUIPMENT PLAN
18. DRINKING FOUNTAIN WITH BOTTLE FILLER, REFER TO PLUMBING DRAWINGS
19. WALL-HUNG SERVICE SINK WITH DRAINBOARD, REFER TO PLUMBING DRAWINGS
20. WASHER / EXTRACTOR
21. EMERGENCY EYE WASH AND SAFETY SHOWER STATION
22. UTILITY SINK, REFER TO PLUMBING DRAWINGS
23. FRL - FIBER REINFORCED LAMINATE (W-5), REFER TO MATERIAL SCHEDULE
24. PAINTED GYPSUM BOARD, REFER TO ROOM FINISH SCHEDULE
25. FRP - FIBER REINFORCED PANEL (W-4), REFER TO MATERIAL SCHEDULE
26. PPE HEATED GEAR DRYING RACK

tsk
314 South Water Street,
Suite 100
Henderson, NV 89015
phone: 702.456.3000
fax: 702.898.6209
www.tska.com

THESE DRAWINGS AND SPECIFICATIONS ARE THE PROPERTY OF TATE SNYDER KIMSEY ARCHITECTS AND MAY NOT BE REPRODUCED OR USED FOR ANY PURPOSE WITHOUT THE ARCHITECTS WRITTEN CONSENT. AS INSTRUMENTS OF SERVICE, THESE DOCUMENTS ARE NOT FINAL AND READY FOR USE, AND THEREFORE NOT VALID, UNLESS THEY ARE SEALED, SIGNED AND DATED.

Copyright, Ltd 2023

Consultant

PLEASE RECYCLE

Project
WEST WENDOVER NEW FS #13

N. GENE L. JONES WAY, WEST WENDOVER, NV 89883

Job No: 22-002.00

Owner
CITY OF WEST WENDOVER

PHASE-1B DESIGN DEVELOPMENT

REVISIONS		
REV	DATE	DESCRIPTION

Sheet Title
ENLARGED PLANS AND ELEVATIONS

Date: MAY 3, 2023

Sheet No:
A1.21

TOILET ACCESSORIES SCHEDULE				
SYMBOL	DESCRIPTION	MANUFACTURER (BASIS OF DESIGN)	MFR NO.	PROVIDED/INSTALLED
TA-1	1 1/4" Diameter Stainless Steel Grab Bars with Snap Flange	Bobrick Washroom Equipment, Inc.	B-5806 Series	
TA-2	1 1/4" Diameter Stainless Steel Grab Bars with Snap Flange	Bobrick Washroom Equipment, Inc.	B-5806 Series	
TA-3	1 1/4" Diameter Stainless Steel Grab Bars with Snap Flange	Bobrick Washroom Equipment, Inc.	B-5806 Series	
TA-4	Contura Series Surface Mounted Soap Dispenser	Bobrick Washroom Equipment, Inc.	B-4112	
TA-5	Glass Mirror with Stainless Steel Angle Frame	Bobrick Washroom Equipment, Inc.	B-165 Series	
TA-6	Classic Series Surface Mounted Seat Cover Dispenser	Bobrick Washroom Equipment, Inc.	B-221	
TA-7	Paper Towel Dispenser And Waste Receptacle - Semi-Recessed	Bobrick Washroom Equipment, Inc.	B-38032	
TA-8	Surface-Mounted Multi-Roll Toilet Tissue Dispenser	Bobrick Washroom Equipment, Inc.	B-2888	
TA-9	Surface-Mounted Sanitary Napkin Disposal	Bobrick Washroom Equipment, Inc.	B-270	
TA-10	Stainless Steel Mop and Broom Holder	Bobrick Washroom Equipment, Inc.	B-223	

CASEWORK SCHEDULE				
	SIZE			
CDS	W	H	D	REMARKS
CW_Counter Top-L Shaped	34"	36"	24"	
100M	48"	31"	24"	
101	24"	31"	24"	
152	36"	36"	30"	
152	42"	36"	24"	
211	12"	36"	24"	
211	18"	36"	24"	
222	30"	36"	24"	
222	34"	36"	24"	
301	12"	30"	12"	
301	18"	30"	12"	
302	30"	12"	12"	
302	30"	30"	12"	
302	34"	30"	12"	
302	42"	22"	12"	
302	42"	30"	12"	
4021	48"	84"	24"	
402		84"		

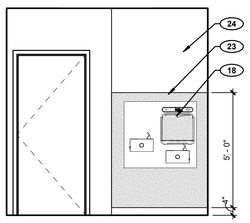

D1 ENTRY 101 - WEST
SCALE: 3/8" = 1'-0"

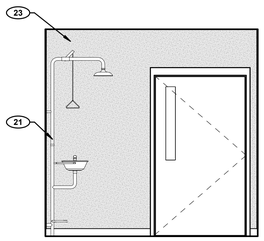

C5 GROSS DECON 117 - NORTH
SCALE: 3/8" = 1'-0"

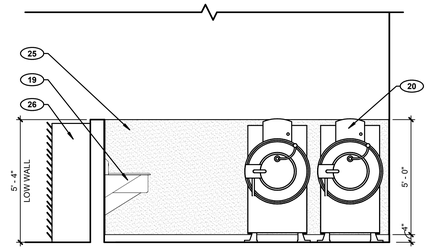

C2 DECON 118 - WEST
SCALE: 3/8" = 1'-0"

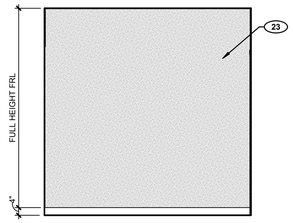

C8 GROSS DECON 117 - EAST
SCALE: 3/8" = 1'-0"

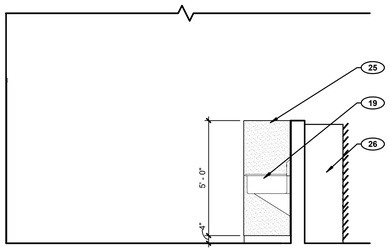

C4 DECON 118 - EAST
SCALE: 3/8" = 1'-0"

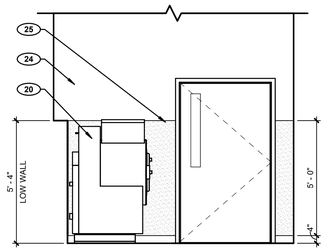

C1 DECON 118 - NORTH
SCALE: 3/8" = 1'-0"

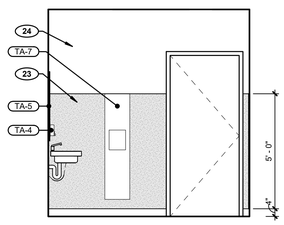

D5 PUBLIC RR 106 - EAST
SCALE: 3/8" = 1'-0"

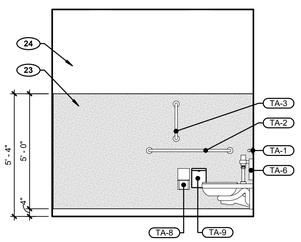

D3 PUBLIC RR 106 - WEST
SCALE: 3/8" = 1'-0"

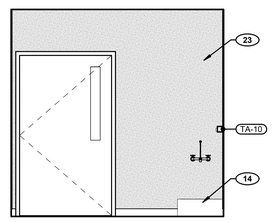

C7 GROSS DECON 117 - SOUTH
SCALE: 3/8" = 1'-0"

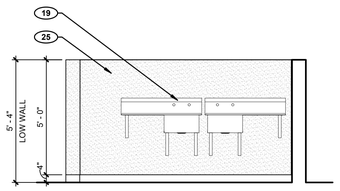

C3 DECON 118 - SOUTH
SCALE: 3/8" = 1'-0"

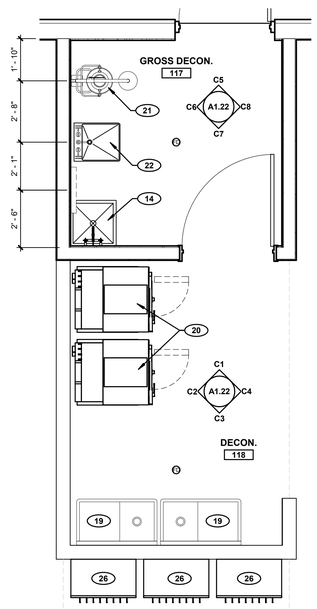

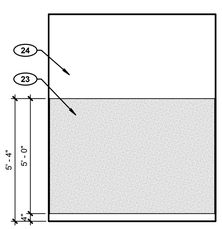

D4 PUBLIC RR 106 - SOUTH
SCALE: 3/8" = 1'-0"

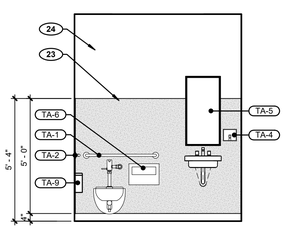

D2 PUBLIC RR 106 - NORTH
SCALE: 3/8" = 1'-0"

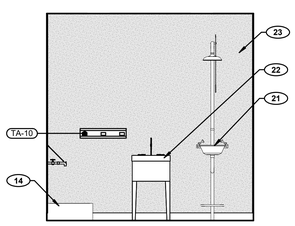

C6 GROSS DECON 117 - WEST
SCALE: 3/8" = 1'-0"

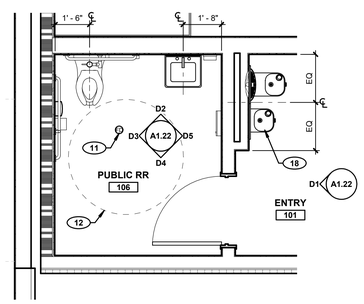

D ENLARGED PLAN - PUBLIC RR 106
SCALE: 3/8" = 1'-0"

ENLARGED PLAN - GROSS DECON 117 / DECON 118
C SCALE: 3/8" = 1'-0"

GENERAL NOTES

1. REFER TO GENERAL ACCESSIBILITY DETAILS IN G1.0X SERIES FOR TYPICAL ACCESSIBLE FIXTURE, GRAB BAR AND ACCESSORY MOUNTING HEIGHTS AND LOCATIONS.
2. REFER TO SHEET A2.01 FOR ROOM FINISH SCHEDULE AND MATERIAL SCHEDULE.
3. REFER TO DIMENSION PLAN FOR WALL PARTITION TYPES. REFER TO SHEET A2.35 FOR PARTITION DETAILS.
4. REFER TO A8.XX SERIES FOR CASEWORK PLANS AND ELEVATIONS.
5. FURNITURE SHOWN FOR REFERENCE ONLY. FURNITURE NOT IN CONTRACT.
6. FD - FLOOR DRAINS TO SLOPE 1/8" PER FOOT.
7. "ACC" DENOTES AN ACCESSIBLE FIXTURE. REFER TO SHEET G1.03.
8. METAL WALL BACKING TO BE PROVIDED FOR ALL WALL MOUNTED EQUIPMENT.

KEYNOTES

1. STAINLESS STEEL COUNTERTOP WITH BACKSPLASH AND MARINE EDGE
2. BASE CABINET, REFER TO CASEWORK SCHEDULE AND DETAILS
3. UPPER CABINET, REFER TO CASEWORK SCHEDULE AND DETAILS
4. STAINLESS STEEL SINK, REFER TO PLUMBING DRAWINGS
5. DISHWASHER, REFER TO FURNITURE AND EQUIPMENT PLAN
6. TALL PANTRY CABINET, REFER TO CASEWORK SCHEDULE AND DETAILS
7. 30" GAS RANGE/OVEN
8. REFRIGERATOR, SUBZERO
9. OVER-THE-RANGE MICROWAVE OVEN, REFER TO FURNITURE AND EQUIPMENT PLAN
10. COFFEE STATION
11. FLOOR DRAIN, REFER TO PLUMBING DRAWINGS
12. 5' - 0" ACCESSIBLE TURN RADIUS, TYPICAL
13. PRE-FABRICATED SHOWER UNIT
14. MOP SINK, REFER TO PLUMBING DRAWINGS
15. SOLID SURFACE COUNTERTOP WITH BACKSPLASH
16. WASHER, REFER TO FURNITURE AND EQUIPMENT PLAN
17. DRYER, REFER TO FURNITURE AND EQUIPMENT PLAN
18. DRINKING FOUNTAIN WITH BOTTLE FILLER, REFER TO PLUMBING DRAWINGS
19. WALL-HUNG SERVICE SINK WITH DRAINBOARD, REFER TO PLUMBING DRAWINGS
20. WASHER / EXTRACTOR
21. EMERGENCY EYE WASH AND SAFETY SHOWER STATION
22. UTILITY SINK, REFER TO PLUMBING DRAWINGS
23. FRL - FIBER REINFORCED LAMINATE (W-5), REFER TO MATERIAL SCHEDULE
24. PAINTED GYPSUM BOARD, REFER TO ROOM FINISH SCHEDULE
25. FRP - FIBER REINFORCED PANEL (W-4), REFER TO MATERIAL SCHEDULE
26. PPE HEATED GEAR DRYING RACK

tsk
314 South Water Street,
Suite 100
Henderson, NV 89015
phone: 702.456.3000
fax: 702.898.6209
www.tska.com

THESE DRAWINGS AND SPECIFICATIONS ARE THE PROPERTY OF TATE SNYDER KIMSEY ARCHITECTS AND MAY NOT BE REPRODUCED OR USED FOR ANY PURPOSE WITHOUT THE ARCHITECTS WRITTEN CONSENT. AS INSTRUMENTS OF SERVICE, THESE DOCUMENTS ARE NOT FINAL AND READY FOR USE, AND THEREFORE NOT VALID, UNLESS THEY ARE SEALED, SIGNED AND DATED.

Copyright, Ltd 2023

Consultant

PLEASE RECYCLE

Project
WEST WENDOVER NEW FS #13

N. GENE L. JONES WAY, WEST WENDOVER, NV 89883

Job No: 22-002.00

Owner
CITY OF WEST WENDOVER

PHASE-1B DESIGN DEVELOPMENT

REVISIONS		
REV	DATE	DESCRIPTION

Sheet Title
ENLARGED PLANS AND ELEVATIONS

Date: MAY 3, 2023
Sheet No:
A1.22

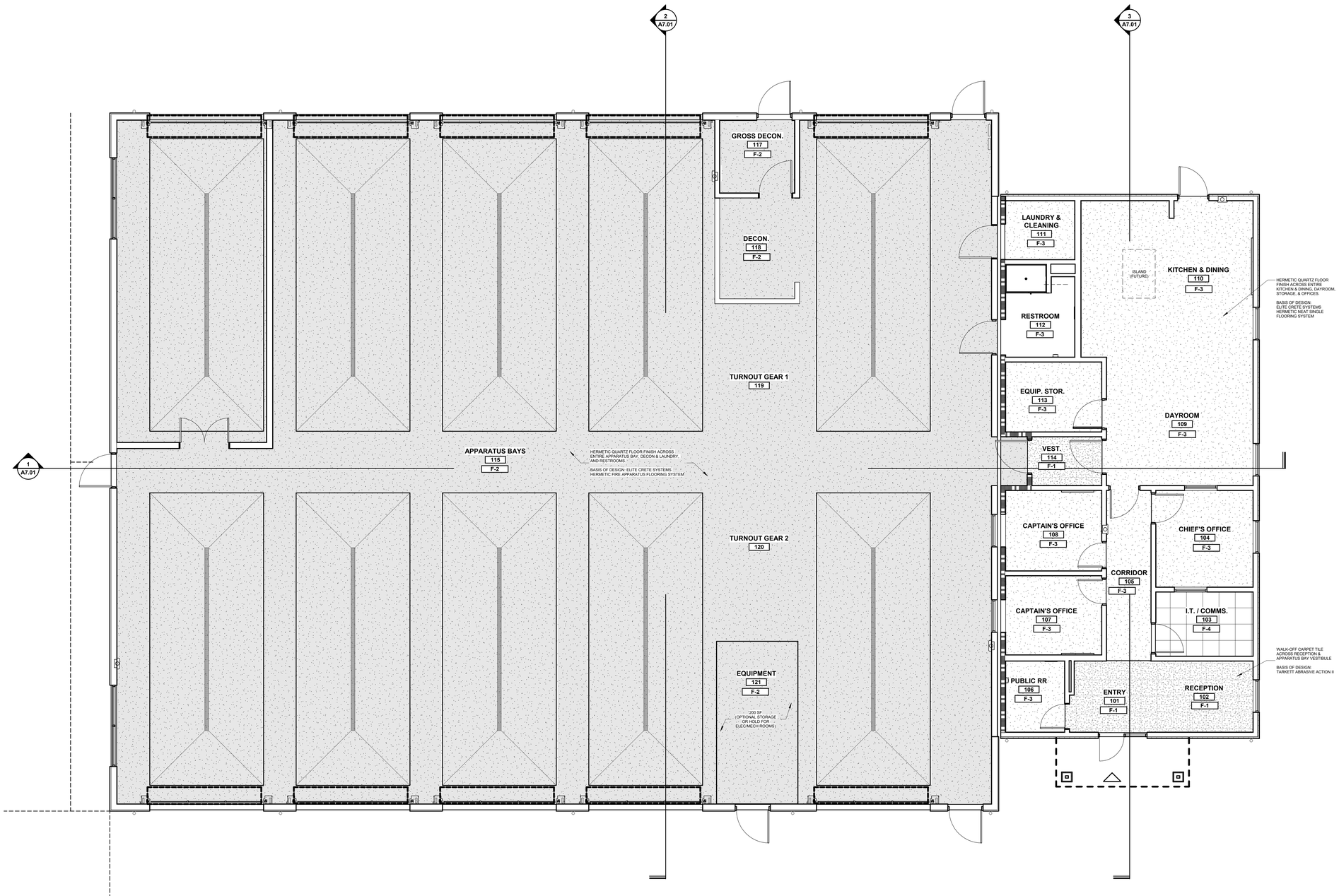

1 FLOOR FINISH PLAN
SCALE: 3/16" = 1'-0"

NORTH 0' 3' 5' 11'

GENERAL NOTES

1. ALL DIMENSIONS ARE TAKEN FROM GRIDLINES, FACE OF STUD, MASONRY OR CONCRETE UNLESS NOTED OTHERWISE.
2. REFER TO SHEET A2.01 FOR ROOM FINISH SCHEDULE AND MATERIAL SCHEDULE.
3. CORNERGUARD CG-1 ON EVERY WALL OUTSIDE CORNER, UNLESS NOTED OTHERWISE.
4. REFER TO A8.XX SERIES FOR CASEWORK PLANS AND ELEVATIONS.
5. REFER TO A2.4X SERIES FOR INTERIOR DETAILS.

KEYNOTES

LEGEND

- 2' X 2' WALK-OFF CARPET TILE **F-1**
- RESINOUS EPOXY FLOORING - DARK GRAY **F-2**
- RESINOUS EPOXY FLOORING - LIGHT GRAY **F-3**
- STATIC DISSIPATIVE VCT **F-4**

tsk
314 South Water Street,
Suite 100
Henderson, NV 89015
phone: 702.456.3000
fax: 702.898.6209
www.tska.com

THESE DRAWINGS AND SPECIFICATIONS ARE THE PROPERTY OF TATE SNYDER KIMSEY ARCHITECTS AND MAY NOT BE REPRODUCED OR USED FOR ANY PURPOSE WITHOUT THE ARCHITECTS WRITTEN CONSENT. AS INSTRUMENTS OF SERVICE, THESE DOCUMENTS ARE NOT FINAL AND READY FOR USE, AND THEREFORE NOT VALID, UNLESS THEY ARE SEALED, SIGNED AND DATED.

Copyright, Ltd 2023

Consultant

PLEASE RECYCLE

Project
WEST WENDOVER NEW FS #13

N. GENE L. JONES WAY, WEST WENDOVER, NV 89883

Job No: 22-002.00

Owner
CITY OF WEST WENDOVER

PHASE-1B DESIGN DEVELOPMENT

REVISIONS		
REV	DATE	DESCRIPTION

Sheet Title
FINISH PLAN

Date: MAY 3, 2023
Sheet No:
A1.31

ROOM FINISH SCHEDULE

ROOM NO	ROOM NAME	FLOORING		CEILING	WALLS (ORIENTATION IS BASED ON PROJECT NORTH)				COMMENTS
		MATERIAL	BASE	MATERIAL	NORTH MATERIAL	WEST MATERIAL	SOUTH MATERIAL	EAST MATERIAL	
LEVEL 1									
101	ENTRY								
102	RECEPTION	F-1	B-1	C-1	W-6	W-1 / W-5	W-1 / W-2	W-1	
103	I.T. / COMMS.	F-4	B-1	C-1	W-1 / W-7	W-1 / W-7	W-1 / W-7	W-1 / W-7	
104	CHIEF'S OFFICE	F-3	B-1	C-1	W-1	W-1	W-6	W-1	
106	PUBLIC RR	F-3	B-3	C-3	W-1 / W-5	W-1 / W-5	W-1 / W-5	W-1 / W-5	
107	CAPTAIN'S OFFICE	F-3	B-1	C-1	W-1	W-1	W-1	W-1	
108	CAPTAIN'S OFFICE	F-3	B-1	C-1	W-1	W-1	W-1	W-1	
109	DAYROOM	F-3	B-1	C-1	-	W-1	W-6	W-1	
110	KITCHEN & DINING	F-3	B-1	C-2	W-1	W-1 / W-5	-	W-1	
111	LAUNDRY & CLEANING	F-2	B-2	C-3	W-1 / W-4	W-1 / W-4	W-1 / W-4	W-1 / W-4	
112	RESTROOM	F-2	B-2	C-3	W-1 / W-5	W-1 / W-5	W-1 / W-5	W-1 / W-5	
113	EQUIP. STOR.	F-1	B-1	C-3	W-1	W-1	W-1	W-1	
115	APPARATUS BAYS	F-2	B-2	IMP-2	IMP-1A / IMP-1B	IMP-1A / IMP-1B	IMP-1A / IMP-1B	IMP-1A / IMP-1B	
116	FUTURE BAY 5 BUILDOUT								
117	GROSS DECON.	F-2	B-2	C-3	W-1 / W-4	W-1 / W-4	W-1 / W-4	W-1 / W-4	
118	DECON.	F-2	B-2	C-3	W-1 / W-4	W-1 / W-4	W-1 / W-4	W-1 / W-4	
119	TURNOUT GEAR 1	F-2	-	IMP-2	-	-	-	-	
120	TURNOUT GEAR 2	F-2	-	IMP-2	-	-	-	-	
121	EQUIPMENT	F-2	B-1	IMP-2	-	-	-	-	
122	RISER	F-2	B-2	-					



BUILDING MATERIAL SCHEDULE - INTERIOR

KEY	DESCRIPTION	MANUFACTURER (BASIS OF DESIGN)	MODEL NUMBER	COLOR	REMARKS
BASE					
B-1	RUBBER WALL BASE	TARKETT	BASEWORKS - TYPE TS 4"	63 BURNT UMBER	CONFIRM EXISTING CITY HALL MATERIALS
B-2	RESINOUS EPOXY COVE BASE	ELITE CRETE SYSTEMS	HERMETIC FIRE APPARATUS FLOORING SYSTEM	DARK GRAY	@ APPARATUS BAYS
B-3	RESINOUS EPOXY COVE BASE	ELITE CRETE SYSTEMS	HERMETIC NEAT SINGLE FLOORING SYSTEM	LIGHT GRAY	
CEILING					
C-1	ACOUSTICAL CEILING TILE	USG	24" x 48" x 1" HALCYON #98241 LAY-IN SQUARE EDGE	WHITE PANEL / WHITE GRID	15/16" DONN DX GRID, SQ. EDGE
C-2	ACOUSTICAL CEILING TILE	USG	24" x 48" x 5/8" CLEAN ROOM PANEL #56091 NON-PERF. LAY-IN	WHITE PANEL / WHITE GRID	15/16" DONN DX GRID, SQ. EDGE (IN KITCHEN)
C-3	PAINTED GYPSUM BOARD			PC-2, U.N.O. - SEE RCP	
CORNER GUARDS					
CG-1	CORNER GUARD	CS GROUP - ACROVYN	CO-8 4FT.	STAINLESS STEEL	@ ALL OUTSIDE CORNERS, SURFACE MOUNT
COUNTERTOP					
SS-1	SOLID SURFACE	CORIAN	3/4" QUARTZ	SPARKLING GRANITA	@ RECEPTION COUNTER, RR SINKS & COUNTERS
SS-2	STAINLESS STEEL	TBD	TBD	STAINLESS STEEL	@ KITCHEN & WORK BENCH COUNTERS (MARINE EDGE)
FLOORING					
F-1	WALK-OFF CARPET	TARKETT	ABRASIVE ACTION II 02578	WINTER GRAY 19103	@ ENTRY & VESTIBULE
F-2	RESINOUS EPOXY FLOORING	ELITE CRETE SYSTEMS	HERMETIC FIRE APPARATUS FLOORING SYSTEM	DARK GRAY FIELD W/ SAFETY YELLOW AISLES & STRIPING	@ APPARATUS BAYS
F-3	RESINOUS EPOXY FLOORING	ELITE CRETE SYSTEMS	HERMETIC NEAT SINGLE FLOORING SYSTEM	LIGHT GRAY	
F-4	STATIC DISSIPATIVE VCT	TARKETT	PRIMO SD - STATIC CONTROL	DARK COOL GREY 0563	@ I.T. / COMMS. ROOM
WALLS					
W-1	PAINTED GYPSUM BOARD				SEE PAINT COLOR SCHEDULE, FINISH PLANS, AND INTERIOR ELEVATIONS. ABUSE RESISTANT UP TO 6FT. A.F.F. IN CORRIDORS.
W-2	STOREFRONT			ANODIZED ALUMINUM	
W-3	TACKABLE WALL SURFACE	KOROSEAL	WALLTALKERS TAC-WALL	09 - ONYX 48"	W/ ALUMINUM J-TRIM
W-4	FIBER REINFORCED PANEL (FRP)	PANOLAM		WHITE	@ DECON. & LAUNDRY AREAS
W-5	FIBER REINFORCED LAMINATE (FRL)	PANOLAM	PIONITE (5'-0" x 10'-0")	AG750 - DAYDREAMING (SD)	@ VESTIBULE, RESTROOMS & KITCHEN
W-6	LEVEL-5 FINISH GYPSUM BOARD WALL		VINYL GRAPHIC LOCATION (TBD)	SEE VINYL GRAPHIC SCHEDULE & DIGITAL GRAPHICS SPECIFICATION	
W-7	PLYWOOD BACKBOARD				@ I.T. / COMMS. ROOM
WINDOW COVERINGS					
WC-1	MECHOSHADE	MECHOI5 SYSTEM (MANUAL)	SOHO 1600	LIGHT GRAY - 1603 (3% OPEN)	@ OFFICE, DAYROOM, & KITCHEN WINDOWS (DARK GRAY TRIM)

BUILDING MATERIAL SCHEDULE - EXTERIOR

KEY	DESCRIPTION	MANUFACTURER (BASIS OF DESIGN)	MODEL NUMBER	COLOR	REMARKS
CLAY BRICK					
CB-1	STRUCTURAL CLAY BRICK	INTERSTATE BRICK	ATLAS | 8" x 2-1/4" x 16" CENTER SCORED	TERRA COTTA - MATTE	EXTERIOR MONUMENT SIGN W/ CONCRETE CAP
EIFS					
CS-1	EXTERIOR INSULATION FINISH SYSTEM	DRYVIT	SANDBLAST	COLOR TO MATCH PC-5	SEE EXTERIOR ELEVATIONS
CS-2	EXTERIOR INSULATION FINISH SYSTEM	DRYVIT	SANDBLAST	COLOR TO MATCH PC-6	SEE EXTERIOR ELEVATIONS
INSULATED METAL PANEL					
IMP-1A	INSULATED METAL PANEL	NUCOR	HE40 | 2.5" R-20 WALL (HEAVY EMBOSSED) - SANTA FE STYLE	DESERT SAND	FLAT PANEL W/ TEXTURE | DOWNSPOUTS TO MATCH
IMP-1B	INSULATED METAL PANEL	NUCOR	HE40 | 2.5" R-20 WAINSCOT (HEAVY EMBOSSED) - SANTA FE STYLE	SURREY BEIGE	FLAT PANEL W/ TEXTURE | DOWNSPOUTS TO MATCH
IMP-2	INSULATED METAL PANEL	NUCOR	SR2 | 4" R-32 STANDING SEAM ROOF	TERRA COTTA	HIDDEN FASTENER TRIM & GUTTERS TO MATCH
STANDING SEAM ROOF					
SR-1	STANDING SEAM ROOF	NUCOR	CRF STANDING SEAM ROOF SYSTEM	TERRA COTTA	HIDDEN FASTENER TRIM & GUTTERS TO MATCH

PAINT COLOR SCHEDULE

KEY	DESCRIPTION	COLOR	LOCATION	SHEEN
PC-1	WHITE	SW 7757 HIGHLY REFLECTIVE WHITE	INTERIOR GYP. BOARD WALLS (FIELD), OUTLETS & FACEPLATES TO MATCH	EGGSHELL
PC-2	WHITE	SW 7007 CEILING BRIGHT WHITE	INTERIOR GYP. BOARD CEILINGS, EXPOSED STRUCTURE, EXPOSED DUCTWORK & HVAC GRILLES, U.N.O., EXTERIOR SOFFITS	SEMI-GLOSS
PC-3	DARK GRAY	SW 7674 PEPPERCORN	INTERIOR METAL DOORS & METAL DOOR FRAMES	GLOSS
PC-4	DARK BROWN	SW 6160 BEST BRONZE	EXTERIOR METAL DOORS & METAL DOOR FRAMES	GLOSS
PC-5	LIGHT BROWN	SW 9109 NATURAL LINEN	EXTERIOR EIFS FIELD COLOR	MATTE
PC-6	DARK BROWN	SW 9088 UTAUPEIA	EXTERIOR EIFS FIELD COLOR	MATTE

CMU PAINT COLOR SCHEDULE

KEY	DESCRIPTION	COLOR	LOCATION
BC-1			
BC-2			

tsk
314 South Water Street,
Suite 100
Henderson, NV 89015
phone: 702.456.3000
fax: 702.898.6209
www.tska.com

THESE DRAWINGS AND SPECIFICATIONS ARE THE PROPERTY OF TATE SNYDER KIMSEY ARCHITECTS AND MAY NOT BE REPRODUCED OR USED FOR ANY PURPOSE WITHOUT THE ARCHITECTS WRITTEN CONSENT. AS INSTRUMENTS OF SERVICE, THESE DOCUMENTS ARE NOT FINAL AND READY FOR USE, AND THEREFORE NOT VALID, UNLESS THEY ARE SEALED, SIGNED AND DATED.

Copyright, Ltd 2023

Consultant

PLEASE RECYCLE

Project
WEST WENDOVER NEW FS #13

N. GENE L. JONES WAY, WEST WENDOVER, NV 89883

Job No: 22-002.00

Owner
CITY OF WEST WENDOVER

PHASE-1B DESIGN DEVELOPMENT

REVISIONS		
REV	DATE	DESCRIPTION

Sheet Title
BUILDING MATERIAL SCHEDULES & ROOM FINISH SCHEDULE

Date: MAY 3, 2023
Sheet No:

A2.01

DOOR SCHEDULE

DR. NO.	RM. NO.	PR	PANEL SIZE W	H	T	TYPE	MAT'L	FRAME TYPE	MAT'L	HEAD DTL	SILL DTL	JAMB DTL LATCH	JAMB DTL HINGE	HDWR	LABEL	REMARKS
101	101		3' - 0"	7' - 4"	1 3/4"	FG										
103	103		3' - 6"	7' - 0"	1 3/4"	II										
104	105		3' - 6"	7' - 0"	1 3/4"	X										
105	109		3' - 6"	7' - 0"	1 3/4"	II										
106	106		3' - 0"	7' - 0"	1 3/4"	F										
107	105		3' - 0"	7' - 0"	1 3/4"	N										
108	108		3' - 0"	7' - 0"	1 3/4"	N										
110	110		3' - 6"	7' - 0"	1 3/4"	HH										
111	115		4' - 0"	7' - 0"	1 3/4"	O										
112	112		4' - 0"	7' - 0"	1 3/4"	S										
113	113			7' - 0"	1 3/4"	Y										
114	114		4' - 0"	7' - 0"	1 3/4"	O										
114A	115		4' - 0"	7' - 0"	1 3/4"	O										
115	115		4' - 0"	7' - 0"	1 3/4"	S										
115A				14' - 0"	1 5/8"	EE										
115B				14' - 0"	1 5/8"	EE										
115C				14' - 0"	1 5/8"	EE										
115D				14' - 0"	1 5/8"	EE										
115E				14' - 0"	1 5/8"	EE										
115F			4' - 0"	7' - 0"	1 3/4"	S										
115G	115			14' - 0"	1 5/8"	EE										
115H	115			14' - 0"	1 5/8"	EE										
115J	115			14' - 0"	1 5/8"	EE										
115K	115			14' - 0"	1 5/8"	EE										
115L	115		4' - 0"	7' - 0"	1 3/4"	S										
116	116	■	3' - 0"	7' - 0"	1 3/4"	F										
116A				14' - 0"	1 5/8"	EE										
117	118		4' - 0"	7' - 0"	1 3/4"	O										
117A	117		4' - 0"	7' - 0"	1 3/4"	O										
121			4' - 0"	7' - 0"	1 3/4"	S										

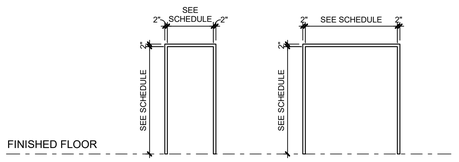

DOOR FRAME TYPES
SCALE: 1/4" = 1'-0"

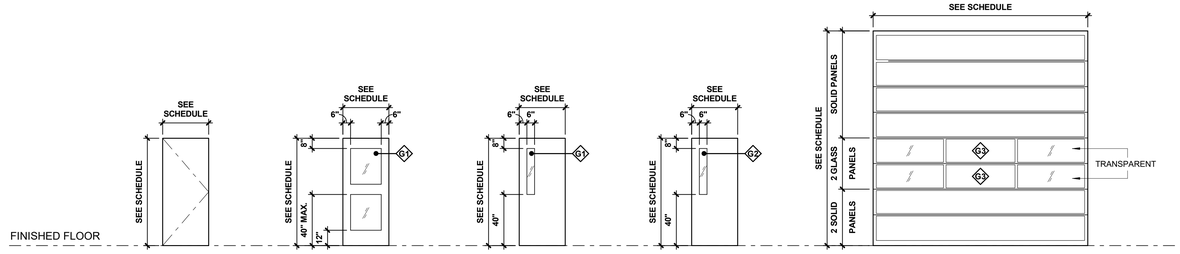

DOOR PANEL TYPES
SCALE: 1/4" = 1'-0"

GENERAL NOTES

1. VERIFY ALL DIMENSIONS IN FIELD PRIOR TO FABRICATION.
2. GRIND ALL WELDS SMOOTH.
3. COORDINATE ALL FRAMES WITH INTRUSION ALARM CONDUIT ROUGH-IN REQUIREMENTS, PER ELECTRICAL DRAWINGS.
4. THE BOTTOM 12" OF DOOR (EXCEPT AUTOMATIC DOORS) SHALL HAVE A SMOOTH UNINTERRUPTED SURFACE.
5. ALL ALUMINUM FRAMES TO BE FACTORY FINISHED.
6. ALL STEEL FRAMES AND DOORS TO BE PAINTED. REFER TO PAINT COLOR SCHEDULE.
7. TEMPERED GLAZING SHALL BE INSTALLED IN ACCORDANCE WITH IBC 2406.4.1.

KEYNOTES

LEGEND

HM	HOLLOW METAL
SC	SOLID-CORE
STL	STEEL
AL	ALUMINUM
PR	PAIR
X	GLASS TYPE, SEE SPECIFICATIONS

GLAZING TYPES:

- G1 EXTERIOR 1" LOW-E INSULATED TEMPERED SAFETY GLAZING
- G2 INTERIOR 1/4" FULLY TEMPERED SAFETY GLAZING
- G3 EXTERIOR OVERHEAD DOOR 1/2" LOW-E INSULATED TEMPERED GLAZING

NOTE: REFER TO SPECIFICATION FOR FULL DESCRIPTION OF GLAZING TYPES

tsk
314 South Water Street,
Suite 100
Henderson, NV 89015
phone: 702.456.3000
fax: 702.898.6209
www.tska.com

THESE DRAWINGS AND SPECIFICATIONS ARE THE PROPERTY OF TATE SNYDER KIMSEY ARCHITECTS AND MAY NOT BE REPRODUCED OR USED FOR ANY PURPOSE WITHOUT THE ARCHITECTS WRITTEN CONSENT. AS INSTRUMENTS OF SERVICE, THESE DOCUMENTS ARE NOT FINAL AND READY FOR USE, AND THEREFORE NOT VALID, UNLESS THEY ARE SEALED, SIGNED AND DATED.

Copyright, Ltd 2023

Consultant

PLEASE RECYCLE

Project
WEST WENDOVER NEW FS #13

N. GENE L. JONES WAY, WEST WENDOVER, NV 89883

Job No: 22-002.00

Owner
CITY OF WEST WENDOVER

PHASE-1B DESIGN DEVELOPMENT

REVISIONS		
REV	DATE	DESCRIPTION

Sheet Title
DOOR SCHEDULE, PANEL AND FRAME TYPES

Date: MAY 3, 2023

Sheet No:
A2.11

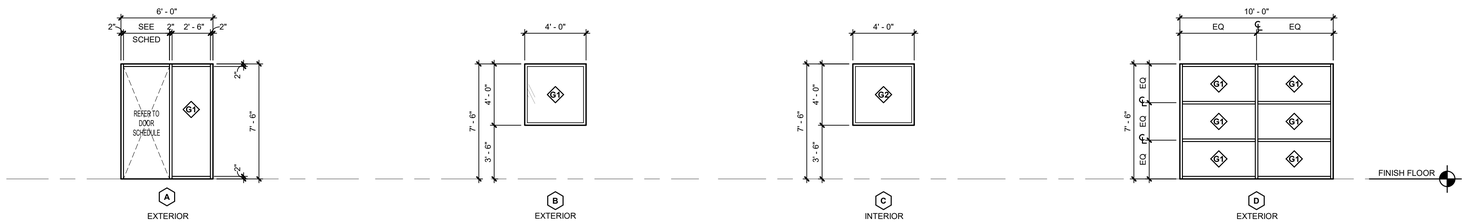

A WINDOW TYPES

SCALE: 1/4" = 1'-0"

GENERAL NOTES

1. VERIFY ALL DIMENSIONS IN FIELD PRIOR TO FABRICATION.
2. ALL SILL DIMENSIONS ARE TAKEN FROM FINISH FLOOR UNLESS NOTED OTHERWISE.
3. ALL ALUMINUM FRAMES TO BE FACTORY FINISHED.
4. ALL STEEL FRAMES TO BE PAINTED. REFER TO PAINT COLOR SCHEDULE.
5. COORDINATE ALL FRAMES WITH INTRUSION ALARM CONDUIT ROUGH-IN REQUIREMENTS, PER ELECTRICAL DRAWINGS.
6. TEMPERED GLAZING SHALL BE INSTALLED IN ACCORDANCE WITH IBC 2406.4.1.

KEYNOTES

LEGEND

	CLEAR GLAZING
G1	EXTERIOR 1" LOW-E INSULATED TEMPERED SAFETY GLAZING
G2	INTERIOR 1/4" FULLY TEMPERED SAFETY GLAZING

tsk
314 South Water Street,
Suite 100
Henderson, NV 89015
phone: 702.456.3000
fax: 702.898.6209
www.tska.com

THESE DRAWINGS AND SPECIFICATIONS ARE THE PROPERTY OF TATE SNYDER KIMSEY ARCHITECTS AND MAY NOT BE REPRODUCED OR USED FOR ANY PURPOSE WITHOUT THE ARCHITECTS WRITTEN CONSENT. AS INSTRUMENTS OF SERVICE, THESE DOCUMENTS ARE NOT FINAL AND READY FOR USE, AND THEREFORE NOT VALID, UNLESS THEY ARE SEALED, SIGNED AND DATED.

Copyright, Ltd 2023

Consultant

PLEASE RECYCLE

Project

WEST WENDOVER NEW FS #13

N. GENE L. JONES WAY, WEST WENDOVER, NV 89883

Job No: 22-002.00

Owner

CITY OF WEST WENDOVER

PHASE-1B DESIGN DEVELOPMENT

REVISIONS		
REV	DATE	DESCRIPTION

Sheet Title

WINDOW TYPES

Date: MAY 3, 2023

Sheet No:

A2.21

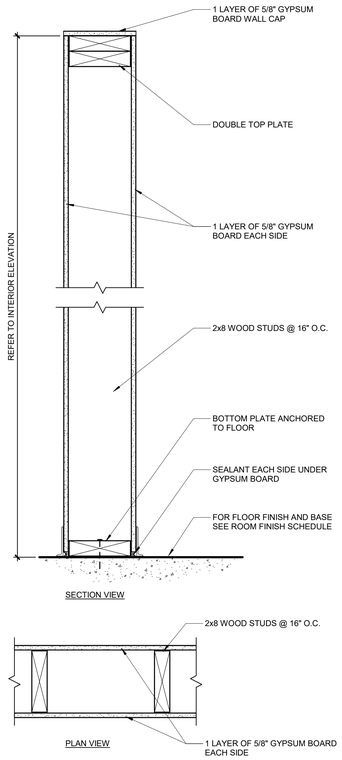

PARTITION TYPE H3

SCALE : 1 1/2" = 1'-0"

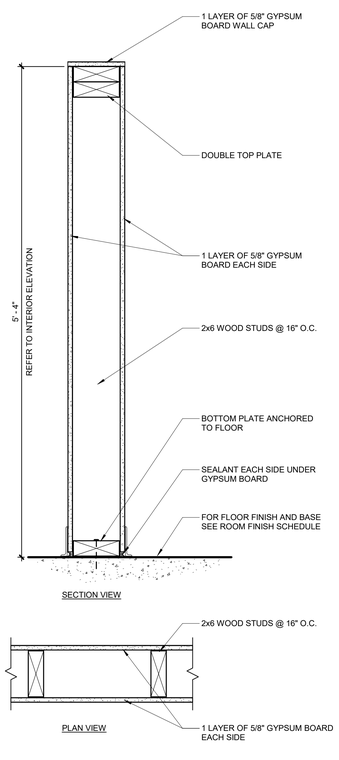

PARTITION TYPE H2

SCALE : 1 1/2" = 1'-0"

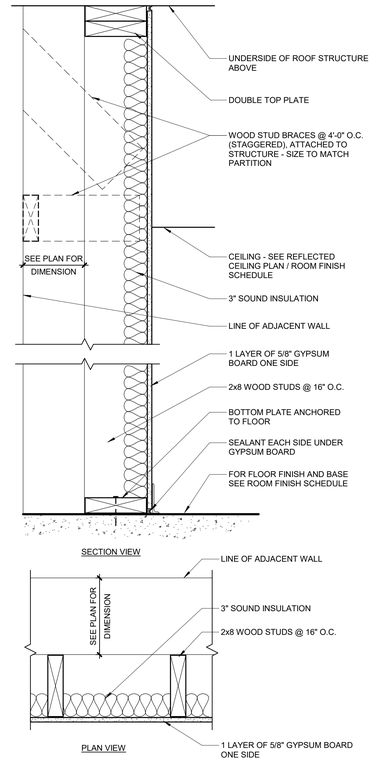

PARTITION TYPE FULL HEIGHT E5

SCALE : 1 1/2" = 1'-0"

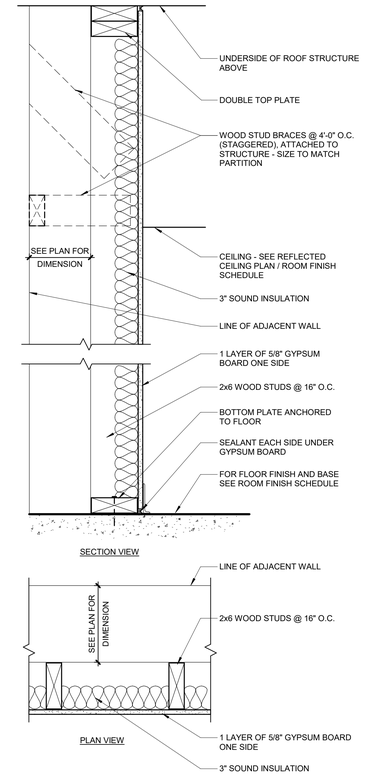

PARTITION TYPE FULL HEIGHT E4

SCALE : 1 1/2" = 1'-0"

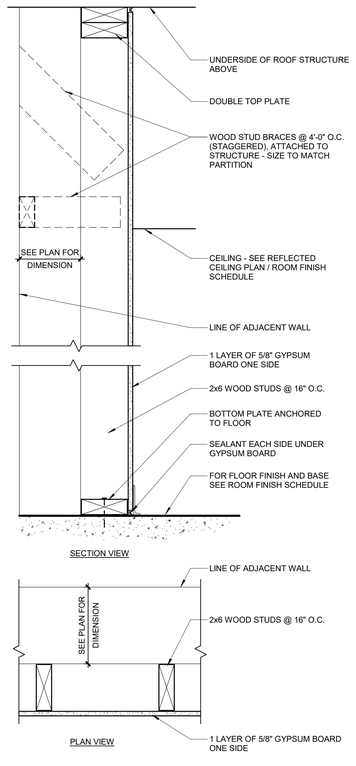

PARTITION TYPE FULL HEIGHT E2

SCALE : 1 1/2" = 1'-0"

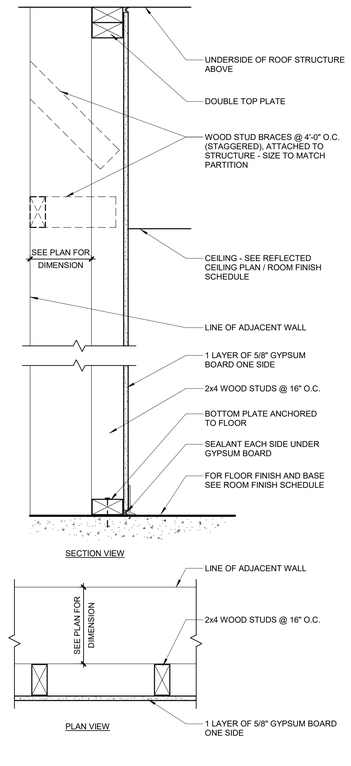

PARTITION TYPE FULL HEIGHT E1

SCALE : 1 1/2" = 1'-0"

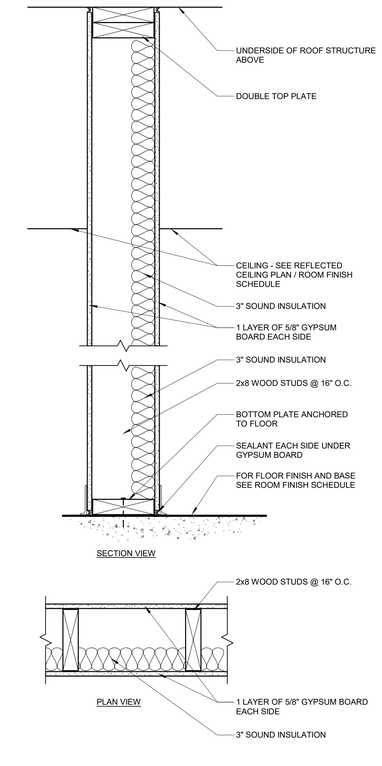

PARTITION TYPE STC-45 ACOUSTICAL PARTITION C4

SCALE : 1 1/2" = 1'-0"

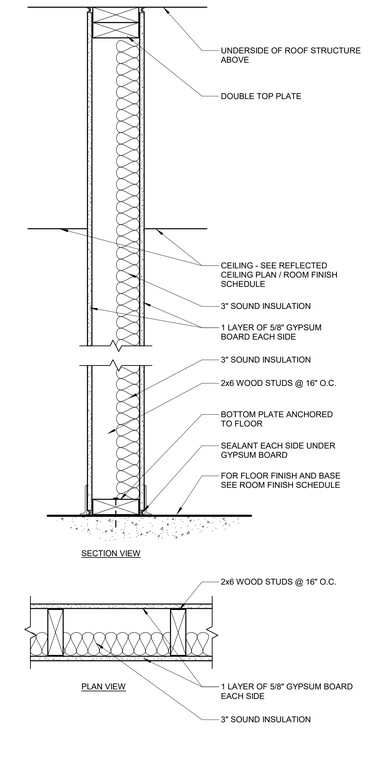

PARTITION TYPE STC-45 ACOUSTICAL PARTITION C3

SCALE : 1 1/2" = 1'-0"

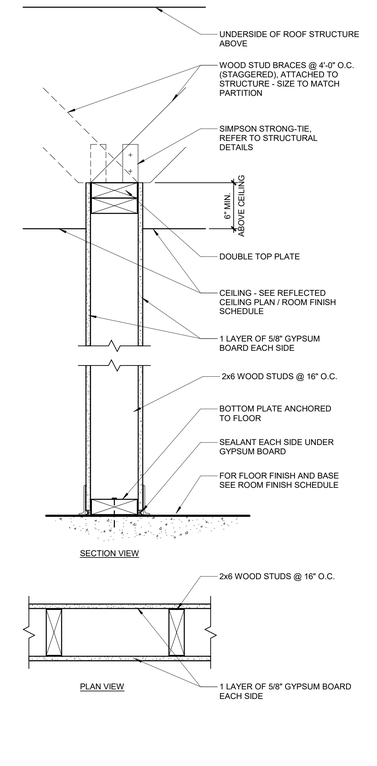

PARTITION TYPE A2

SCALE : 1 1/2" = 1'-0"

tsk
314 South Water Street,
Suite 100
Henderson, NV 89015
phone: 702.456.3000
fax: 702.898.6209
www.tska.com

THESE DRAWINGS AND SPECIFICATIONS ARE THE PROPERTY OF TATE SNYDER KIMSEY ARCHITECTS AND MAY NOT BE REPRODUCED OR USED FOR ANY PURPOSE WITHOUT THE ARCHITECTS WRITTEN CONSENT. AS INSTRUMENTS OF SERVICE, THESE DOCUMENTS ARE NOT FINAL AND READY FOR USE, AND THEREFORE NOT VALID, UNLESS THEY ARE SEALED, SIGNED AND DATED.

Copyright, Ltd 2023

Consultant

PLEASE RECYCLE

Project

WEST WENDOVER NEW FS #13

N. GENE L. JONES WAY, WEST WENDOVER, NV 89883

Job No: 22-002.00

Owner

CITY OF WEST WENDOVER

PHASE-1B DESIGN DEVELOPMENT

REVISIONS		
REV	DATE	DESCRIPTION

Sheet Title

PARTITION TYPES

Date: MAY 3, 2023

Sheet No:

A2.31

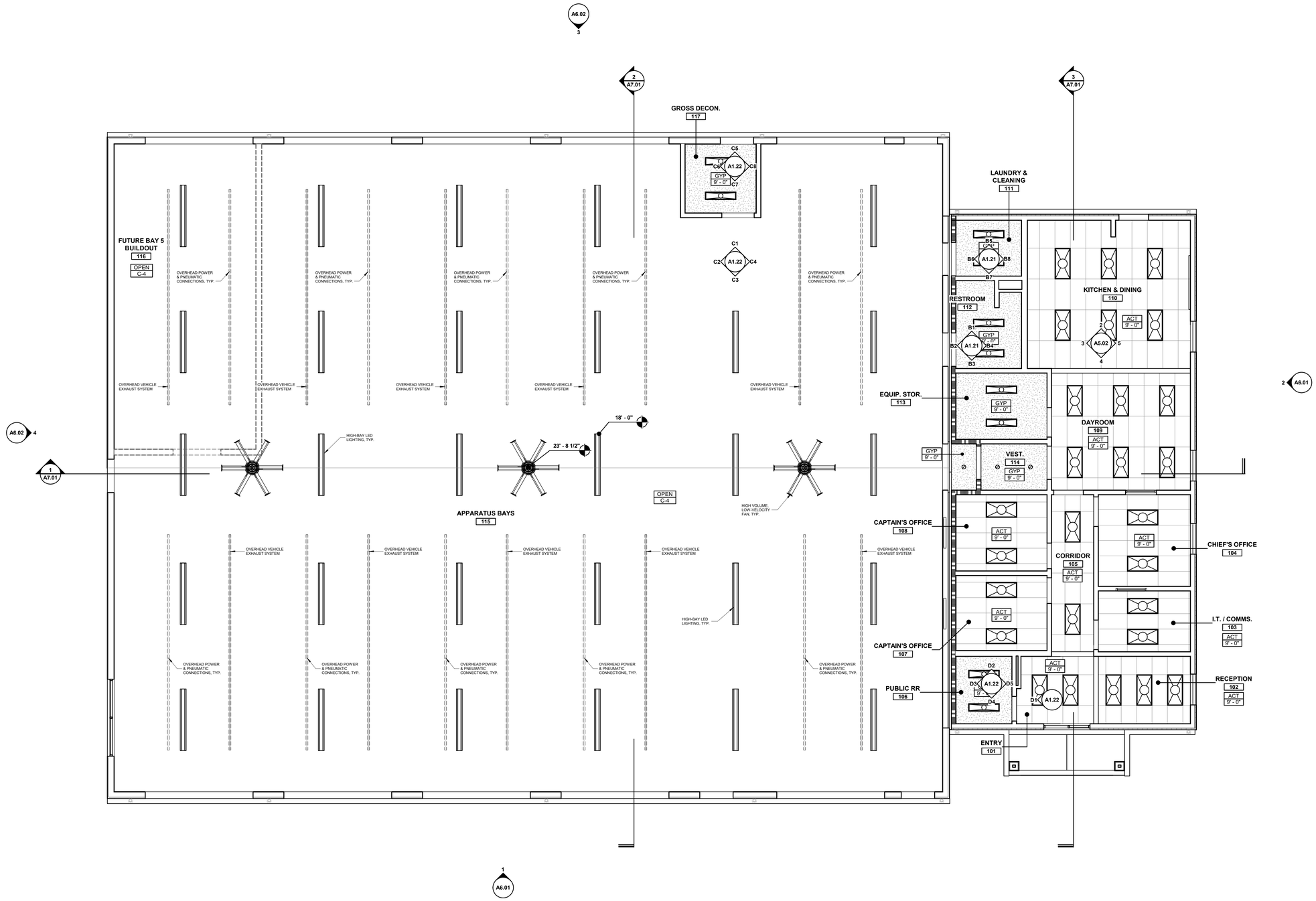

1 REFLECTED CEILING PLAN
SCALE: 3/16" = 1'-0"

NORTH

0' 3' 5' 11'

GENERAL NOTES

1. REFER TO ENLARGED PLANS AND FINISH SCHEDULE FOR CEILING TYPE AND FINISH.
2. REFER TO SHEET A3.11 FOR ALL CEILING DETAILS AND MATERIAL SCHEDULE.
3. SPRINKLER HEADS TO BE CENTERED IN ALL CORRIDORS AND IN CEILING TILES WHERE TILES OCCUR.
4. REFER TO ROOM FINISH SCHEDULE FOR CEILING HEIGHTS AND FINISHES NOT SHOWN ON PLAN.
5. MAINTAIN MINIMUM 3" CLEAR BETWEEN LIGHTS, DIFFUSERS, SPEAKERS, ETC.
6. REFER TO ROOM FINISH SCHEDULE FOR COLOR OF EXPOSED STRUCTURE TO BE PAINTED.
7. COORDINATE LOCATIONS OF CAMERAS TO ENSURE THAT CAMERA VIEWS ARE NOT OBSTRUCTED.
8. CEILING / SOFFIT ELEVATIONS ARE BASED FROM FINISH FLOOR ELEVATIONS. (NOTE: FINISH FLOOR MAY VARY THROUGHOUT THE BUILDING)
9. REFER TO SHEET A1.41FOR EQUIPMENT SCHEDULE.
10. PROVIDE SHADOW MOLD TRIM AS SHOWN ON DETAIL SHEET WHERE ADJACENT CEILING ALIGNS WITH SOFFIT.
11. CASTLE-CUT GYPSUM BOARD TO DECK AND SEAL AT AREAS WITHOUT CEILINGS, UNLESS NOTED OTHERWISE.
12. ALL EXPOSED FASTENERS ON THE UNDERSIDE OF DECK TO BE CUT TO THE SAME LENGTH AND PAINTED TO MATCH THE STRUCTURE.

KEYNOTES

LEGEND

- 24" x 48" ACOUSTIC CEILING TILE **C-1**
- 24" x 24" ACOUSTIC CEILING TILE, NON-PERFORATED **C-2**
- PAINTED GYPSUM BOARD **C-3**
- EXPOSED TO STRUCTURE **C-4**

tsk
314 South Water Street,
Suite 100
Henderson, NV 89015
phone: 702.456.3000
fax: 702.898.6209
www.tska.com

THESE DRAWINGS AND SPECIFICATIONS ARE THE PROPERTY OF TATE SNYDER KIMSEY ARCHITECTS AND MAY NOT BE REPRODUCED OR USED FOR ANY PURPOSE WITHOUT THE ARCHITECTS WRITTEN CONSENT. AS INSTRUMENTS OF SERVICE, THESE DOCUMENTS ARE NOT FINAL AND READY FOR USE, AND THEREFORE NOT VALID, UNLESS THEY ARE SEALED, SIGNED AND DATED.

Copyright, Ltd 2023

Consultant

PLEASE RECYCLE

Project
WEST WENDOVER NEW FS #13

N. GENE L. JONES WAY, WEST WENDOVER, NV 89883

Job No: 22-002.00

Owner
CITY OF WEST WENDOVER

PHASE-1B DESIGN DEVELOPMENT

REVISIONS		
REV	DATE	DESCRIPTION

Sheet Title
REFLECTED CEILING PLAN

Date: MAY 3, 2023
Sheet No:
A3.01

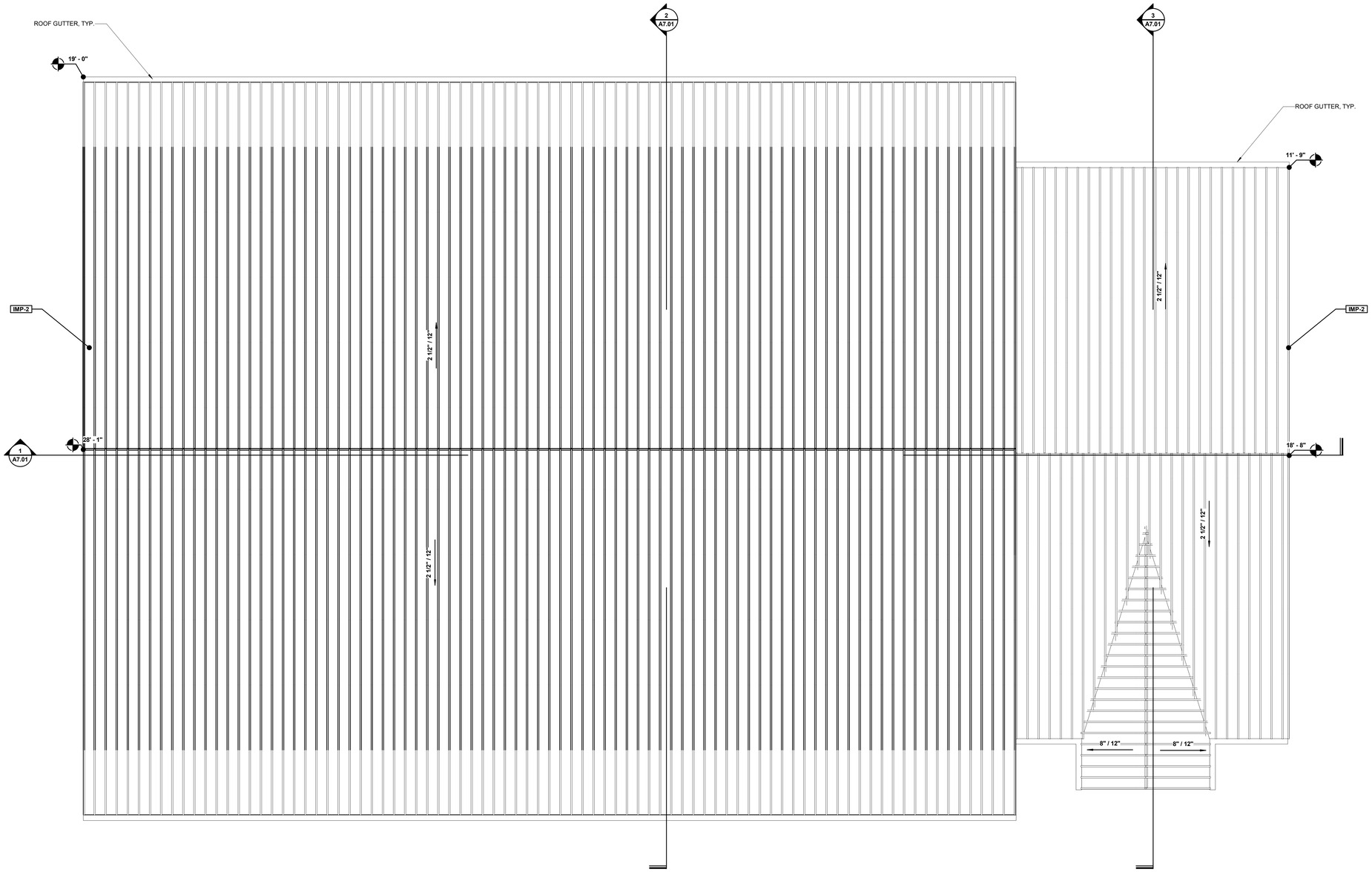

1 ROOF PLAN
SCALE: 3/16" = 1'-0"

NORTH 0' 3' 5' 11'

GENERAL NOTES

1. ALL TOP OF PARAPET (T.O.P.) AND BOTTOM OF DECK (B.O.D.) ELEVATIONS ARE FROM FINISH FLOOR ELEVATION. SEE EXTERIOR ELEVATIONS FOR TOP OF WALL HEIGHTS.
2. REFER TO MECHANICAL PLANS FOR ROOF TOP MECHANICAL EQUIPMENT.
3. ALL ROOF DRAINS SHALL BE A MINIMUM OF 2'-0" CLEAR FROM ALL PARAPETS OR WALL.
4. SLOPE ROOF AS SHOWN. DIRECTIONAL ARROWS ON ROOF PLAN INDICATES DIRECTION OF ROOF SLOPE TO ROOF DRAIN.
5. ALL MAIN ROOF DRAINS SHALL BE LOCATED AT THE LOWEST POSSIBLE ROOF ELEVATION. NOTIFY THE ARCHITECT OF ANY CONFLICTS PRIOR TO ROOF DRAIN AND PIPING INSTALLATION.
6. CRICKET ALL ROOF TOP MECHANICAL UNITS, SKYLIGHTS, HATCHES, ETC., SLOPE TO BE A MINIMUM OF 1/2" PER FOOT.
7. THERE ARE NO FLAT SPOTS ON THE ROOF, ALL AREAS SHALL BE SLOPED, TYPICAL.
8. PROVIDE 3'-0" X 3'-0" TRAFFIC PAD AT TOP AND BOTTOM OF ROOF LADDER.
9. ALL VALLEYS TO SLOPE A MINIMUM OF 1/2" PER FOOT TOWARDS DRAIN.
10. ALL EXPOSED FASTENERS TO BE CUT TO THE SAME LENGTH AND PAINTED TO MATCH THE STRUCTURE.
11. NO WORK, INCLUDING STAGING OR ACCESS TO OTHER PORTIONS OF THE FINISHED ROOF MEMBRANE, SHALL BE PERMITTED. IF STAGING, ACCESS, OR WORK IS REQUIRED ON THE FINISHED MEMBRANE, THE CONTRACTOR SHALL PROVIDE SURFACE PROTECTION. SEE SPECIFICATIONS.

KEYNOTES

tsk
314 South Water Street,
Suite 100
Henderson, NV 89015
phone: 702.456.3000
fax: 702.898.6209
www.tska.com

THESE DRAWINGS AND SPECIFICATIONS ARE THE PROPERTY OF TATE SNYDER KIMSEY ARCHITECTS AND MAY NOT BE REPRODUCED OR USED FOR ANY PURPOSE WITHOUT THE ARCHITECTS WRITTEN CONSENT. AS INSTRUMENTS OF SERVICE, THESE DOCUMENTS ARE NOT FINAL AND READY FOR USE, AND THEREFORE NOT VALID, UNLESS THEY ARE SEALED, SIGNED AND DATED.

Copyright, Ltd 2023

Consultant

PLEASE RECYCLE

Project
WEST WENDOVER NEW FS #13

N. GENE L. JONES WAY, WEST WENDOVER, NV 89883

Job No: 22-002.00

Owner
CITY OF WEST WENDOVER

PHASE-1B DESIGN DEVELOPMENT

REVISIONS		
REV	DATE	DESCRIPTION

Sheet Title
OVERALL ROOF PLAN

Date: MAY 3, 2023
Sheet No:
A4.01

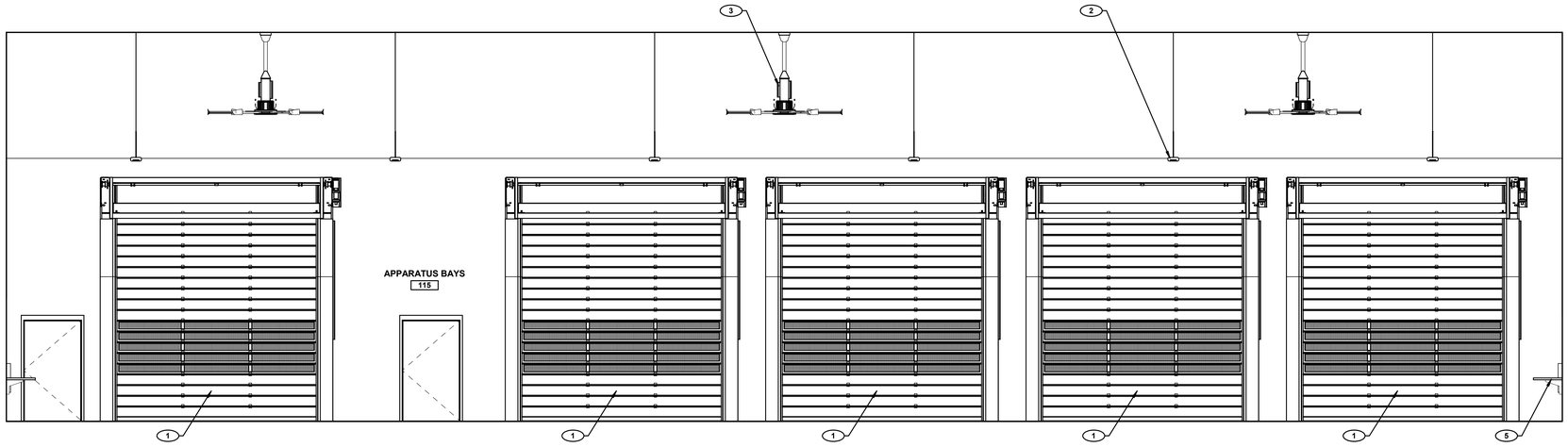

3 APPARATUS BAYS 115 - SOUTH
SCALE: 1/4" = 1'-0"

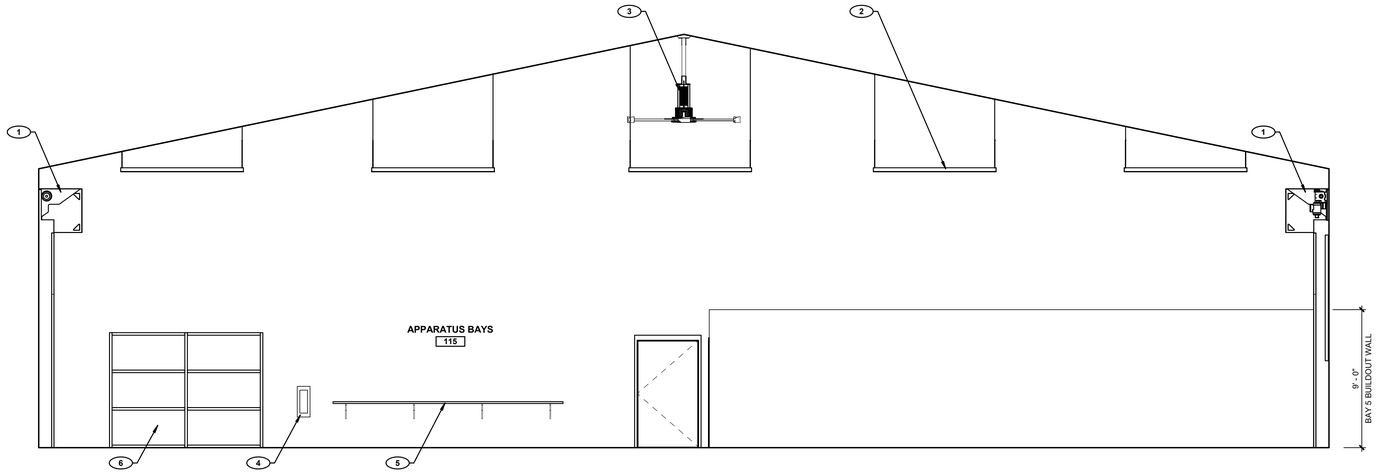

2 APPARATUS BAYS 115 - WEST
SCALE: 1/4" = 1'-0"

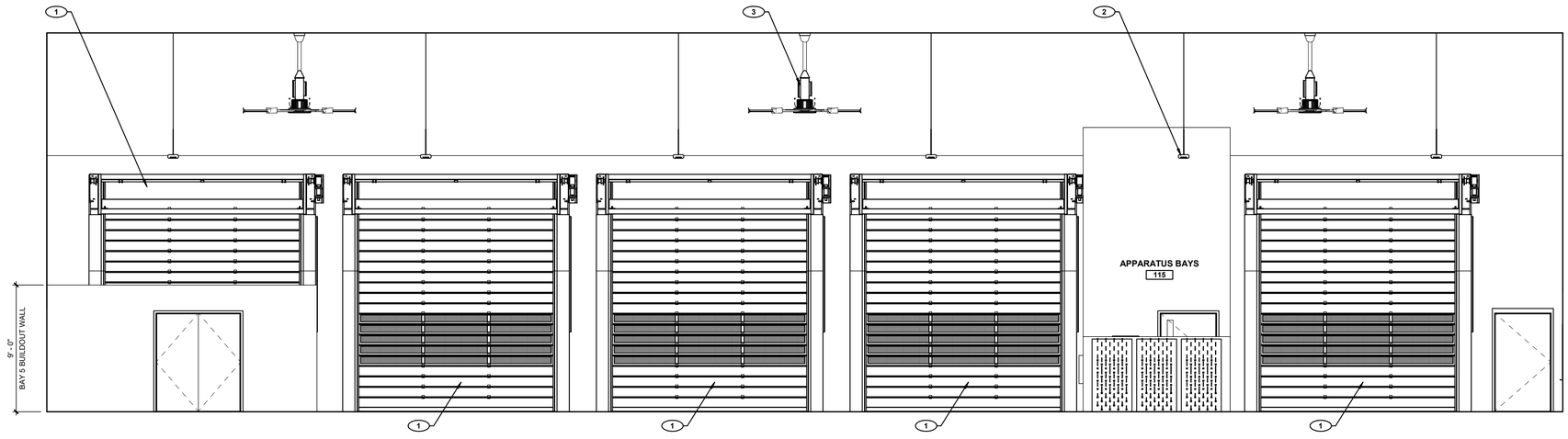

1 APPARATUS BAYS 115 - NORTH
SCALE: 1/4" = 1'-0"

GENERAL NOTES

1. REFER TO SHEET A2.01 FOR ROOM FINISH SCHEDULE AND MATERIAL SCHEDULE.
2. REFER TO CASEWORK PLANS & ELEVATIONS FOR INTERIOR ELEVATIONS OF WALLS BEHIND CASEWORK.
3. PROVIDE SUFFICIENT BLOCKING ON WALLS FOR ALL INTERIOR WALL MOUNTED EQUIPMENT.
4. CONTRACTOR TO REPORT ANY DISCREPANCIES WITH WALL MOUNTED EQUIPMENT AND ACCESSORIES WITH THE ARCHITECT.
5. REFER TO ELECTRICAL DRAWINGS FOR FIXTURE MOUNTING HEIGHTS AND LOCATIONS, UNLESS NOTED OTHERWISE.

KEYNOTES

1. OVERHEAD ROLL-UP DOOR WITH MID-GRAZING, REFER TO DOOR TYPES AND DOOR SCHEDULE
2. HIGH-BAY LED LIGHT FIXTURE, REFER TO ELECTRICAL DRAWINGS
3. HIGH VOLUME, LOW VELOCITY FAN, REFER TO ELECTRICAL DRAWINGS
4. FIRE EXTINGUISHER CABINET, REFER TO LIFE SAFETY PLAN
5. STAINLESS STEEL WITH MARINE EDGE WORK BENCH / CHARGING STATION WITH MULTIPLE OUTLET
6. SCHEDULED WINDOW, REFER TO WINDOW TYPES AND DETAILS
7. 4' x 7' MARKER BOARD
8. ICE MAKER
9. 75" SMART TV MONITOR
10. 4" WALL BASE, REFER TO MATERIAL SCHEDULE

tsk
314 South Water Street,
Suite 100
Henderson, NV 89015
phone: 702.456.3000
fax: 702.898.6209
www.tska.com

THESE DRAWINGS AND SPECIFICATIONS ARE THE PROPERTY OF TATE SNYDER KIMSEY ARCHITECTS AND MAY NOT BE REPRODUCED OR USED FOR ANY PURPOSE WITHOUT THE ARCHITECTS WRITTEN CONSENT. AS INSTRUMENTS OF SERVICE, THESE DOCUMENTS ARE NOT FINAL AND READY FOR USE, AND THEREFORE NOT VALID, UNLESS THEY ARE SEALED, SIGNED AND DATED.

Copyright, Ltd 2023

Consultant

PLEASE RECYCLE

Project
WEST WENDOVER NEW FS #13

N. GENE L. JONES WAY, WEST WENDOVER, NV 89883

Job No: 22-002.00

Owner
CITY OF WEST WENDOVER

PHASE-1B DESIGN DEVELOPMENT

REVISIONS		
REV	DATE	DESCRIPTION

Sheet Title
INTERIOR ELEVATIONS

Date: MAY 3, 2023
Sheet No:
A5.01

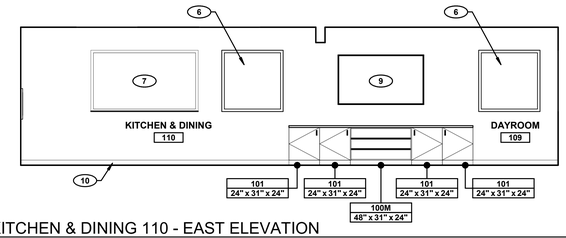

5 KITCHEN & DINING 110 - EAST ELEVATION
SCALE: 1/4" = 1'-0"

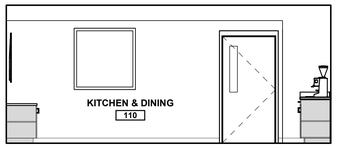

4 KITCHEN & DINING 110 - SOUTH ELEVATION
SCALE: 1/4" = 1'-0"

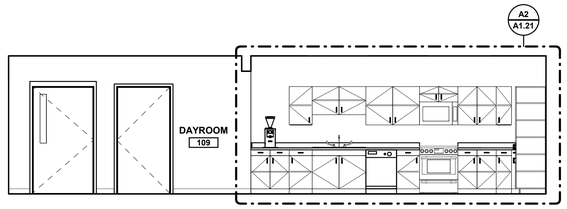

3 KITCHEN & DINING 110 - WEST ELEVATION
SCALE: 1/4" = 1'-0"

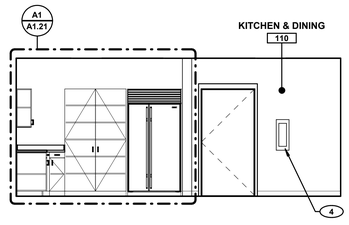

2 KITCHEN & DINING 110 - NORTH ELEVATION
SCALE: 1/4" = 1'-0"

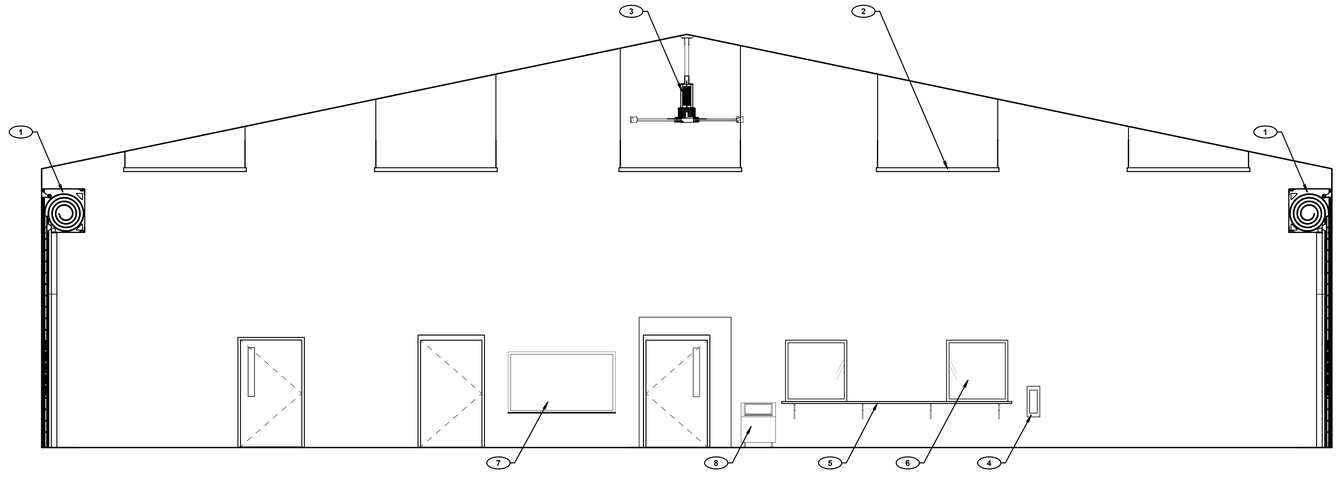

1 APPARATUS BAYS 115 - EAST
SCALE: 1/4" = 1'-0"

GENERAL NOTES

1. REFER TO SHEET A2.01 FOR ROOM FINISH SCHEDULE AND MATERIAL SCHEDULE.
2. REFER TO CASEWORK PLANS & ELEVATIONS FOR INTERIOR ELEVATIONS OF WALLS BEHIND CASEWORK.
3. PROVIDE SUFFICIENT BLOCKING ON WALLS FOR ALL INTERIOR WALL MOUNTED EQUIPMENT.
4. CONTRACTOR TO REPORT ANY DISCREPANCIES WITH WALL MOUNTED EQUIPMENT AND ACCESSORIES WITH THE ARCHITECT.
5. REFER TO ELECTRICAL DRAWINGS FOR FIXTURE MOUNTING HEIGHTS AND LOCATIONS, UNLESS NOTED OTHERWISE.

KEYNOTES

1. OVERHEAD ROLL-UP DOOR WITH MID-GRAZING, REFER TO DOOR TYPES AND DOOR SCHEDULE
2. HIGH-BAY LED LIGHT FIXTURE, REFER TO ELECTRICAL DRAWINGS
3. HIGH VOLUME, LOW VELOCITY FAN, REFER TO ELECTRICAL DRAWINGS
4. FIRE EXTINGUISHER CABINET, REFER TO LIFE SAFETY PLAN
5. STAINLESS STEEL WITH MARINE EDGE WORK BENCH / CHARGING STATION WITH MULTIPLE OUTLET
6. SCHEDULED WINDOW, REFER TO WINDOW TYPES AND DETAILS
7. 4' x 7' MARKER BOARD
8. ICE MAKER
9. 75" SMART TV MONITOR
10. 4" WALL BASE, REFER TO MATERIAL SCHEDULE

tsk
314 South Water Street,
Suite 100
Henderson, NV 89015
phone: 702.456.3000
fax: 702.898.6209
www.tska.com

THESE DRAWINGS AND SPECIFICATIONS ARE THE PROPERTY OF TATE SNYDER KIMSEY ARCHITECTS AND MAY NOT BE REPRODUCED OR USED FOR ANY PURPOSE WITHOUT THE ARCHITECTS WRITTEN CONSENT.
AS INSTRUMENTS OF SERVICE, THESE DOCUMENTS ARE NOT FINAL AND READY FOR USE, AND THEREFORE NOT VALID, UNLESS THEY ARE SEALED, SIGNED AND DATED.
Copyright, Ltd 2023

Consultant

PLEASE RECYCLE

Project
WEST WENDOVER NEW FS #13

N. GENE L. JONES WAY, WEST WENDOVER, NV 89883

Job No: 22-002.00

Owner
CITY OF WEST WENDOVER

PHASE-1B DESIGN DEVELOPMENT

REVISIONS		
REV	DATE	DESCRIPTION

Sheet Title
INTERIOR ELEVATIONS

Date: MAY 3, 2023
Sheet No:
A5.02

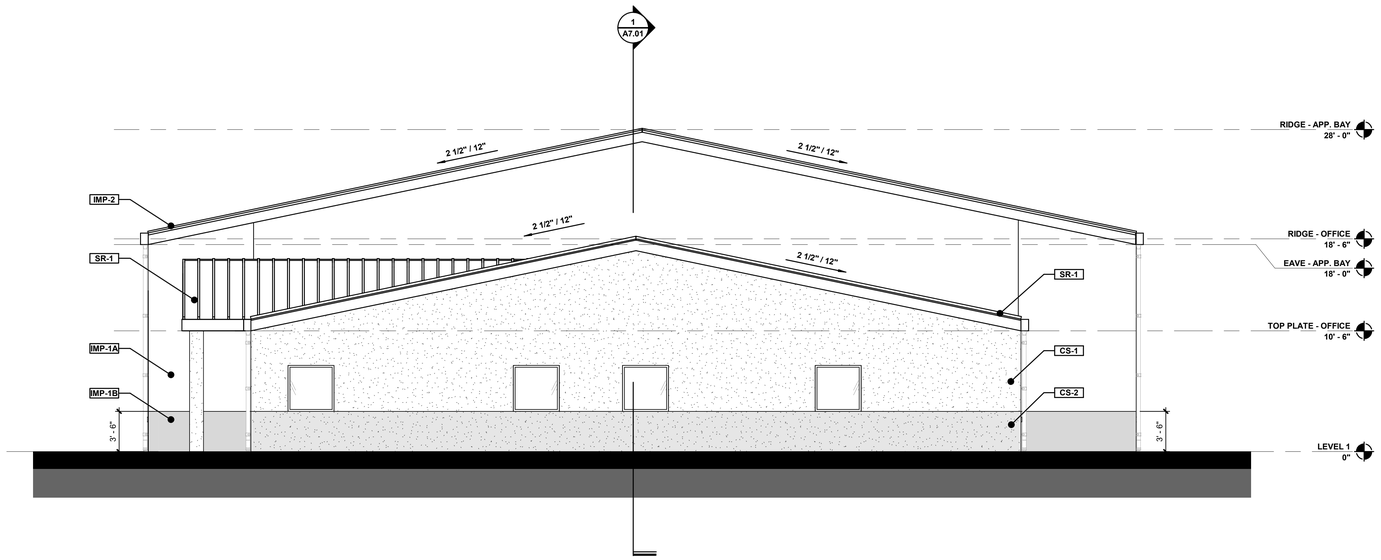

2 EXTERIOR ELEVATION - NORTH
SCALE: 3/16" = 1'-0"

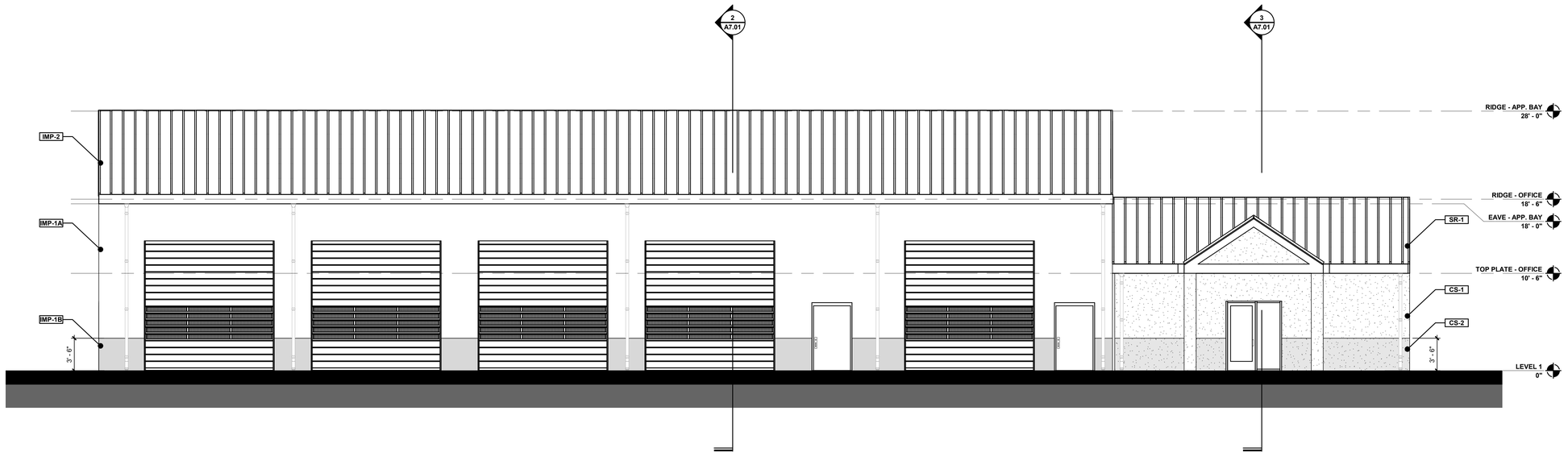

1 EXTERIOR ELEVATION - EAST
SCALE: 3/16" = 1'-0"

GENERAL NOTES

1. REFER TO CIVIL DRAWINGS FOR VARIOUS GRADE LEVELS.
2. ALL RIDGE, TOP PLATE AND EAVE ELEVATION INDICATED ARE MEASURED FROM FINISH FLOOR ELEVATION.
3. ALL EXPOSED EXTERIOR MASONRY TO RECEIVE ANTI-GRAFFITI COATING, INCLUDING ALL SITE WALLS.
4. REFER TO SHEET A2.01 FOR ROOM FINISH SCHEDULE AND MATERIAL SCHEDULE.
5. PROVIDE SUFFICIENT BLOCKING ON WALLS FOR ALL EXTERIOR WALL MOUNTED EQUIPMENT.
6. REFER TO ELECTRICAL DRAWINGS FOR FIXTURE MOUNTING HEIGHTS AND LOCATIONS UNLESS NOTED OTHERWISE.
7. COORDINATE ALL CONDUIT AND J-BOXES TO BE INSTALLED IN CMU WALLS PRIOR TO CMU WALL INSTALLATION.
8. PROVIDE EXPANSION JOINT / CONTROL JOINT ON CMU WALLS AS REQUIRED.
9. PAINT ALL EXPOSED MECHANICAL EQUIPMENT THAT ARE VISIBLE FROM THE ROOF PARAPET

KEYNOTES

LEGEND

- EIFS **(CS-1)**
- EIFS **(CS-2)**
- INSULATED METAL PANEL **(IMP-1A)**
- INSULATED METAL PANEL **(IMP-1B)**
- INSULATED METAL ROOF PANEL **(IMP-2)**
- STANDING SEAM ROOF **(SR-1)**

tsk
314 South Water Street,
Suite 100
Henderson, NV 89015
phone: 702.456.3000
fax: 702.898.6209
www.tska.com

THESE DRAWINGS AND SPECIFICATIONS ARE THE PROPERTY OF TATE SNYDER KIMSEY ARCHITECTS AND MAY NOT BE REPRODUCED OR USED FOR ANY PURPOSE WITHOUT THE ARCHITECTS WRITTEN CONSENT.
AS INSTRUMENTS OF SERVICE, THESE DOCUMENTS ARE NOT FINAL AND READY FOR USE, AND THEREFORE NOT VALID, UNLESS THEY ARE SEALED, SIGNED AND DATED.
Copyright, Ltd 2023

Consultant

PLEASE RECYCLE

Project
WEST WENDOVER NEW FS #13

N. GENE L. JONES WAY, WEST WENDOVER, NV 89883

Job No: 22-002.00

Owner
CITY OF WEST WENDOVER

PHASE-1B DESIGN DEVELOPMENT

REVISIONS

REV	DATE	DESCRIPTION

Sheet Title
EXTERIOR ELEVATIONS

Date: MAY 3, 2023
Sheet No:
A6.01

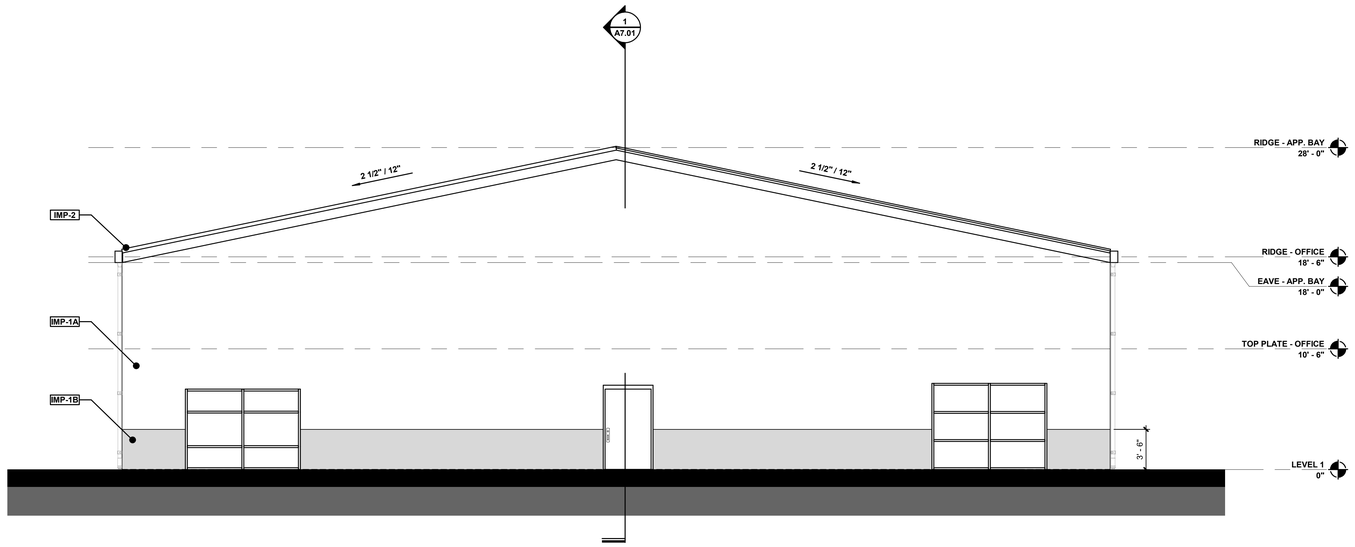

4 EXTERIOR ELEVATION - SOUTH
SCALE: 3/16" = 1'-0"

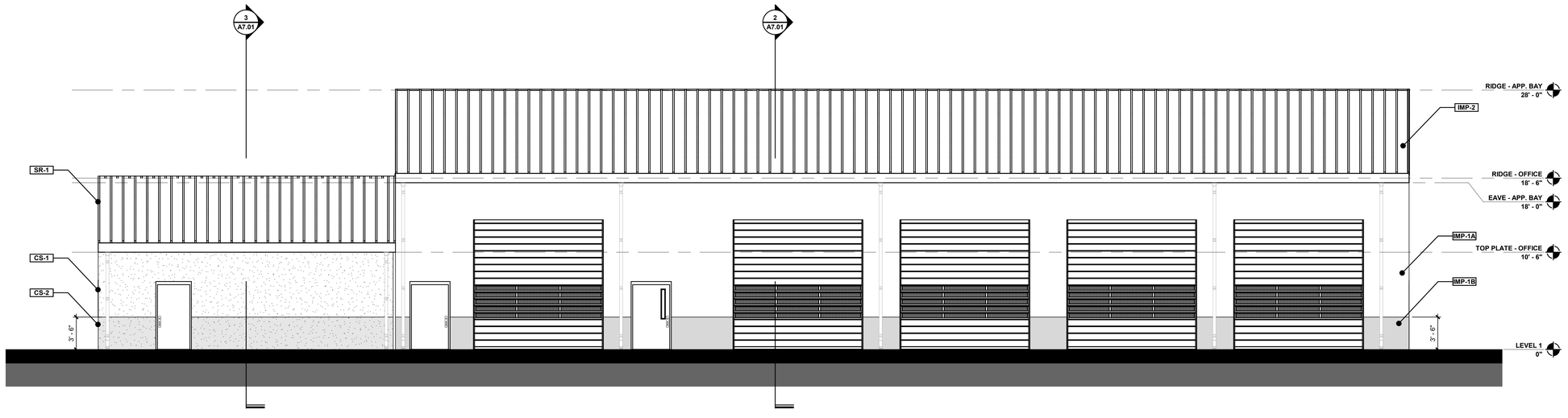

3 EXTERIOR ELEVATION - WEST
SCALE: 3/16" = 1'-0"

GENERAL NOTES

1. REFER TO CIVIL DRAWINGS FOR VARIOUS GRADE LEVELS.
2. ALL RIDGE, TOP PLATE AND EAVE ELEVATION INDICATED ARE MEASURED FROM FINISH FLOOR ELEVATION.
3. ALL EXPOSED EXTERIOR MASONRY TO RECEIVE ANTI-GRAFFITI COATING, INCLUDING ALL SITE WALLS.
4. REFER TO SHEET A2.01 FOR ROOM FINISH SCHEDULE AND MATERIAL SCHEDULE.
5. PROVIDE SUFFICIENT BLOCKING ON WALLS FOR ALL EXTERIOR WALL MOUNTED EQUIPMENT.
6. REFER TO ELECTRICAL DRAWINGS FOR FIXTURE MOUNTING HEIGHTS AND LOCATIONS UNLESS NOTED OTHERWISE.
7. COORDINATE ALL CONDUIT AND J-BOXES TO BE INSTALLED IN CMU WALLS PRIOR TO CMU WALL INSTALLATION.
8. PROVIDE EXPANSION JOINT / CONTROL JOINT ON CMU WALLS AS REQUIRED.
9. PAINT ALL EXPOSED MECHANICAL EQUIPMENT THAT ARE VISIBLE FROM THE ROOF PARAPET

KEYNOTES

LEGEND

- EIFS (CS-1)
- EIFS (CS-2)
- INSULATED METAL PANEL (IMP-1A)
- INSULATED METAL PANEL (IMP-1B)
- INSULATED METAL ROOF PANEL (IMP-2)
- STANDING SEAM ROOF (SR-1)

tsk
314 South Water Street,
Suite 100
Henderson, NV 89015
phone: 702.456.3000
fax: 702.898.6209
www.tska.com

THESE DRAWINGS AND SPECIFICATIONS ARE THE PROPERTY OF TATE SNYDER KIMSEY ARCHITECTS AND MAY NOT BE REPRODUCED OR USED FOR ANY PURPOSE WITHOUT THE ARCHITECTS WRITTEN CONSENT.
AS INSTRUMENTS OF SERVICE, THESE DOCUMENTS ARE NOT FINAL AND READY FOR USE, AND THEREFORE NOT VALID, UNLESS THEY ARE SEALED, SIGNED AND DATED.
Copyright, Ltd 2023

Consultant

PLEASE RECYCLE

Project
WEST WENDOVER NEW FS #13

N. GENE L. JONES WAY, WEST WENDOVER, NV 89883

Job No: 22-002.00

Owner
CITY OF WEST WENDOVER

PHASE-1B DESIGN DEVELOPMENT

REVISIONS		
REV	DATE	DESCRIPTION

Sheet Title
EXTERIOR ELEVATIONS

Date: MAY 3, 2023
Sheet No:
A6.02

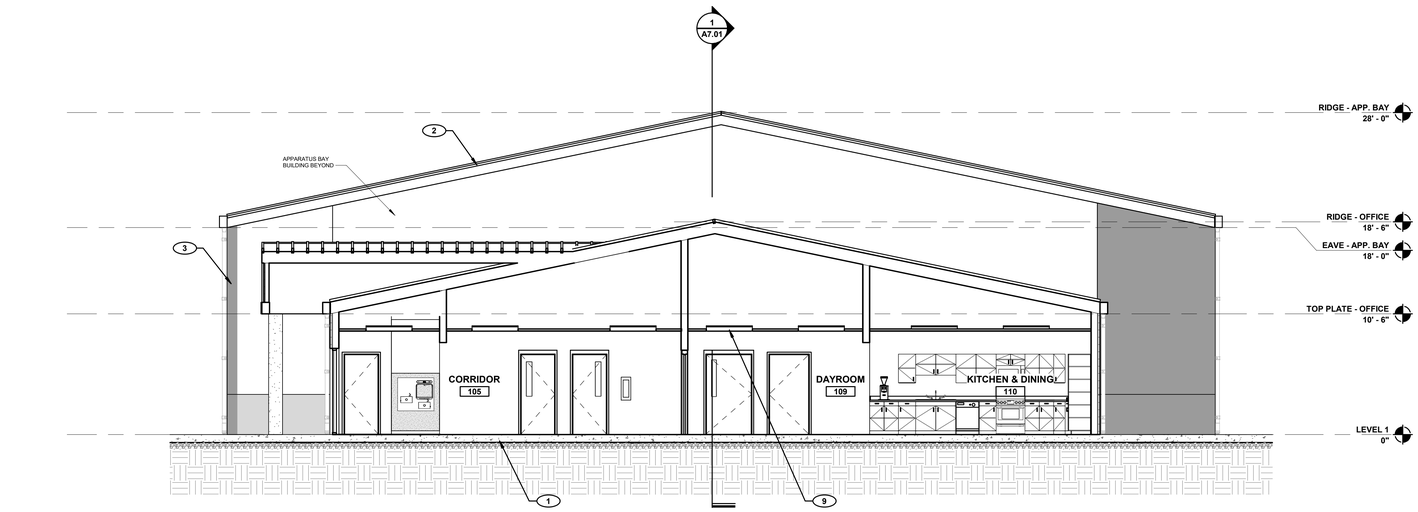

3 BUILDING SECTION - MAIN BUILDING
SCALE: 3/16" = 1'-0"

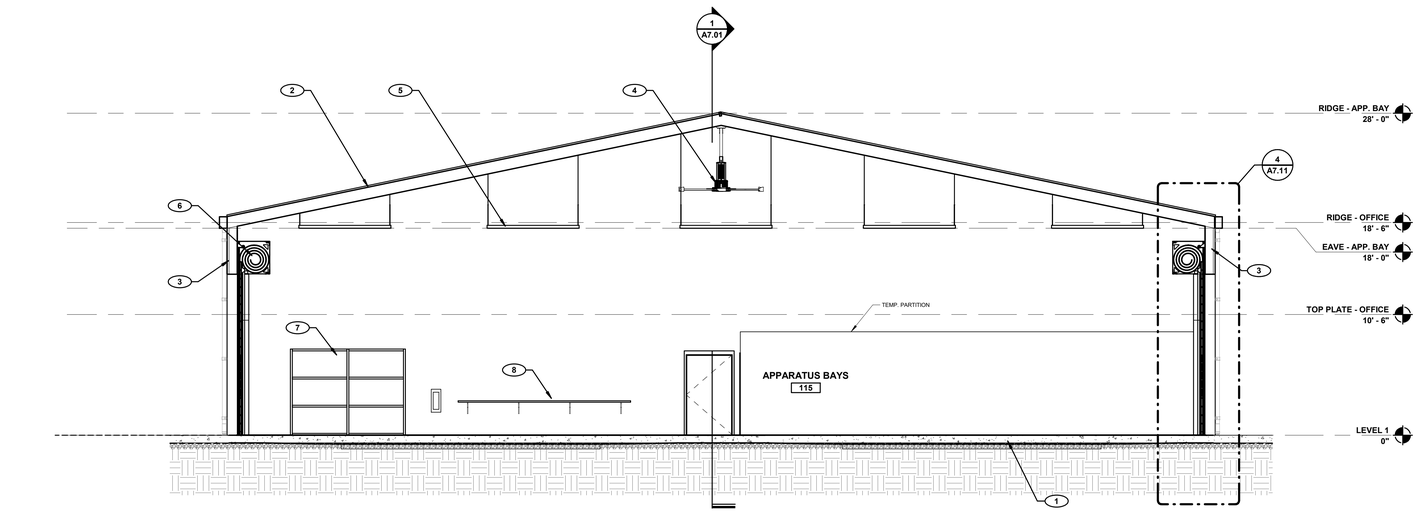

2 BUILDING SECTION - APPARATUS BAYS
SCALE: 3/16" = 1'-0"

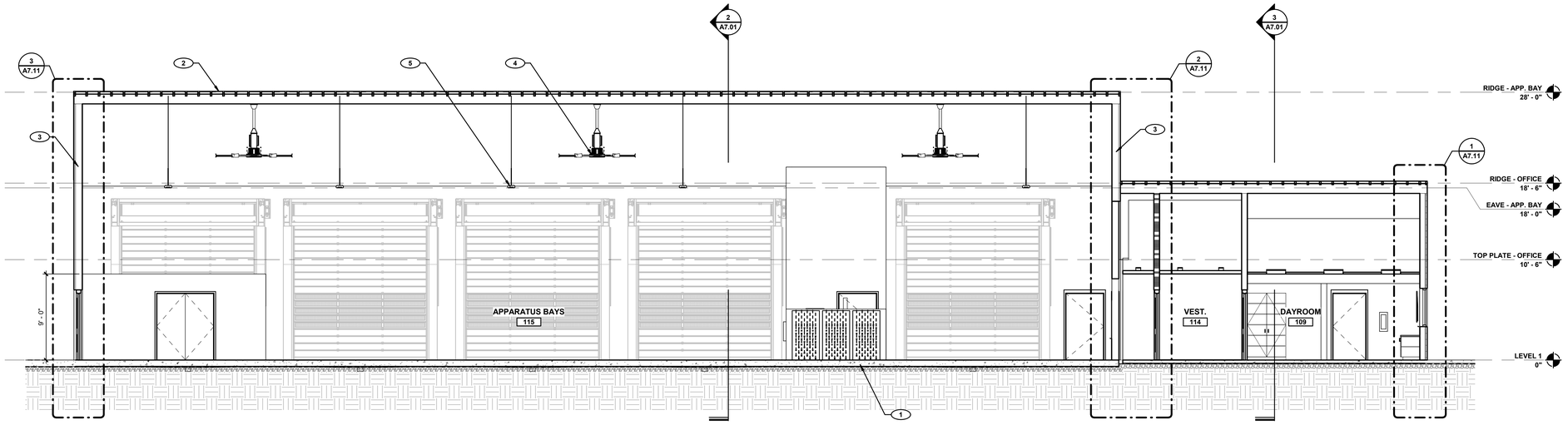

1 BUILDING SECTION - SOUTH/NORTH
SCALE: 3/16" = 1'-0"

GENERAL NOTES

1. ALL RIDGE, TOP PLATE AND EAVE ELEVATION INDICATED ARE MEASURED FROM FINISH FLOOR ELEVATION.
2. REFER TO STRUCTURAL DRAWINGS FOR FOOTING AND SLAB REQUIREMENTS.
3. ALL CONCRETE BLOCK SURFACES ADJACENT TO SOIL BERMS AND PLANTERS SHALL BE PROVIDED WITH A MONOLITHIC WATERPROOF SYSTEM EXTENDING FROM BOTTOM OF FOOTING TO 2" ABOVE SOIL.
4. REFER TO SHEET A4.11 FOR ROOF TYPES AND DETAILS.
5. REFER TO DIMENSION PLAN FOR WALL TYPES.
6. PAINT ALL EXPOSED INTERIOR AND EXTERIOR STRUCTURAL STEEL. SEE FINISH SCHEDULE AND ELEVATIONS.
7. REFER TO FINISH SCHEDULE FOR FLOOR, WALL, AND CEILING FINISHES.
8. PAINT ALL EXPOSED INTERIOR AND EXTERIOR STRUCTURAL STEEL. SEE FINISH SCHEDULE AND ELEVATIONS.
9. PROVIDE APPROPRIATE FIRE STOPPING AT ALL FIRE-RATED PARTITIONS.
10. ALL PENETRATIONS THROUGH WALLS WITH SOUND INSULATION SHALL BE SEALED TIGHT WITH ACOUSTICAL INSULATION AND SEALANT.
11. GRAY CMU IS ACCEPTABLE BELOW GRADE.
12. ALL DISSIMILAR MATERIALS TO RECEIVE SEALANT PRIOR TO PAINTING.

KEYNOTES

1. CONCRETE SLAB OVER VAPOR BARRIER AND ENGINEERED FILL, REFER TO STRUCTURAL DRAWINGS AND SOILS REPORT FOR ADDITIONAL INFORMATION
2. INSULATED STANDING SEAM METAL ROOF PANEL
3. INSULATED METAL WALL PANEL, REFER TO EXTERIOR ELEVATION
4. HIGH VOLUME, LOW VELOCITY FAN, REFER TO ELECTRICAL DRAWINGS
5. HIGH-BAY LED LIGHT FIXTURE, REFER TO ELECTRICAL DRAWINGS
6. OVERHEAD ROLL-UP DOOR WITH MID-GRAZING
7. STOREFRONT WINDOW SYSTEM
8. WALL-MOUNTED WORK BENCH
9. LIGHT FIXTURE, REFER TO ELECTRICAL DRAWINGS

tsk
314 South Water Street,
Suite 100
Henderson, NV 89015
phone: 702.456.3000
fax: 702.898.6209
www.tska.com

THESE DRAWINGS AND SPECIFICATIONS ARE THE PROPERTY OF TATE SNYDER KIMSEY ARCHITECTS AND MAY NOT BE REPRODUCED OR USED FOR ANY PURPOSE WITHOUT THE ARCHITECTS WRITTEN CONSENT.
AS INSTRUMENTS OF SERVICE, THESE DOCUMENTS ARE NOT FINAL AND READY FOR USE, AND THEREFORE NOT VALID, UNLESS THEY ARE SEALED, SIGNED AND DATED.
Copyright, Ltd 2023

Consultant

PLEASE RECYCLE

Project
WEST WENDOVER NEW FS #13

N. GENE L. JONES WAY, WEST WENDOVER, NV 89883

Job No: 22-002.00

Owner
CITY OF WEST WENDOVER

PHASE-1B DESIGN DEVELOPMENT

REVISIONS		
REV	DATE	DESCRIPTION

Sheet Title
BUILDING SECTIONS

Date: MAY 3, 2023
Sheet No:
A7.01

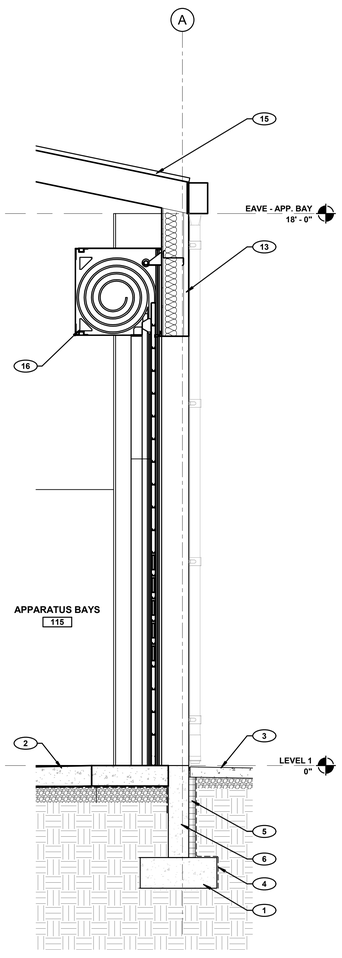

4 WALL SECTION
SCALE: 1/2" = 1'-0"

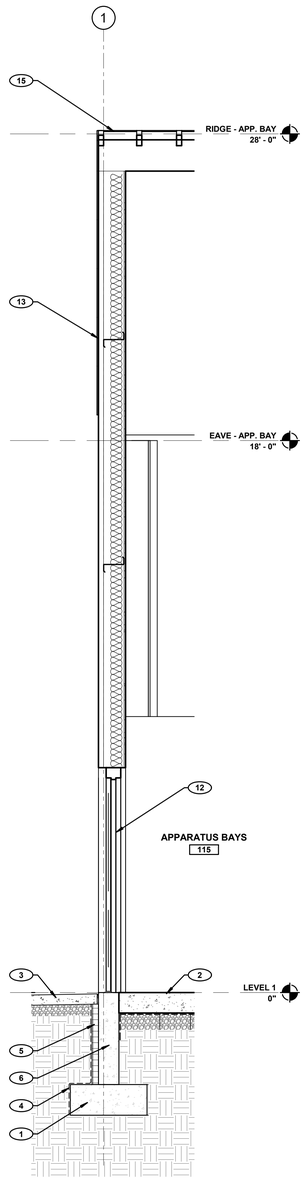

3 WALL SECTION
SCALE: 1/2" = 1'-0"

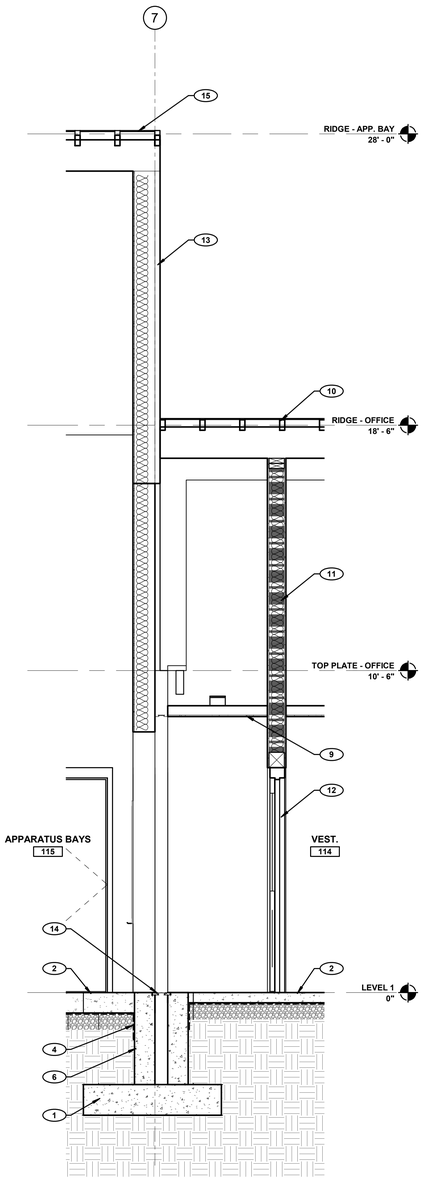

2 WALL SECTION
SCALE: 1/2" = 1'-0"

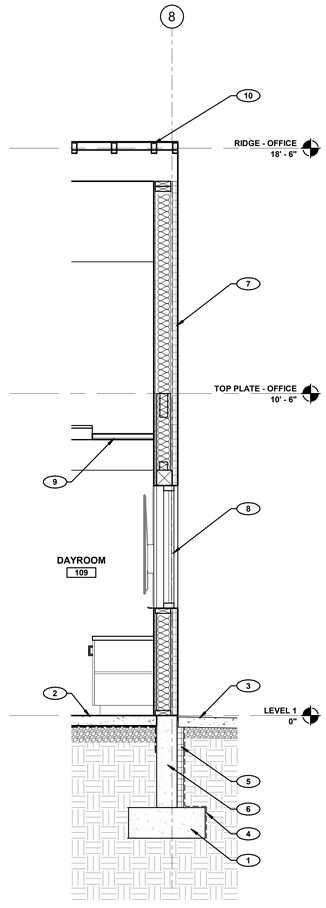

1 WALL SECTION
SCALE: 1/2" = 1'-0"

GENERAL NOTES

1. ALL RIDGE, TOP PLATE AND EAVE ELEVATION INDICATED ARE MEASURED FROM FINISH FLOOR ELEVATION.
2. REFER TO DIMENSION PLAN FOR WALL TYPES.
3. REFER TO SHEET A4.11 FOR ROOF TYPES AND DETAILS.
4. REFER TO FINISH SCHEDULE FOR FLOOR, WALL, AND CEILING FINISHES.
5. REFER TO EXTERIOR ELEVATIONS FOR EXTERIOR MATERIAL COLOR / TEXTURE.
6. PAINT ALL EXPOSED INTERIOR AND EXTERIOR STRUCTURAL STEEL. SEE FINISH SCHEDULE AND ELEVATIONS.
7. REFER TO STRUCTURAL DRAWINGS FOR FOOTING AND SLAB REQUIREMENTS.
8. ALL CONCRETE BLOCK SURFACES ADJACENT TO SOIL BERMS AND PLANTERS SHALL BE PROVIDED WITH A MONOLITHIC WATERPROOF SYSTEM EXTENDING FROM BOTTOM OF FOOTING TO 2" ABOVE SOIL.
9. GRAY CMU IS ACCEPTABLE BELOW GRADE.
10. PROVIDE APPROPRIATE FIRE STOPPING AT ALL FIRE-RATED PARTITIONS.
11. ALL PENETRATIONS THROUGH WALLS WITH SOUND INSULATION SHALL BE SEALED TIGHT WITH ACOUSTICAL INSULATION AND SEALANT.
12. ALL DISSIMILAR MATERIALS TO RECEIVE SEALANT PRIOR TO PAINTING.
13. PROVIDE EXPANSION JOINT MATERIAL BETWEEN CMU WALL AND CONCRETE FLOOR.

KEYNOTES

1. CONCRETE FOOTING, REFER TO STRUCTURAL DRAWINGS
2. CONCRETE SLAB OVER VAPOR BARRIER AND ENGINEERED FILL, REFER TO STRUCTURAL DRAWINGS AND SOILS REPORT FOR ADDITIONAL INFORMATION
3. CONCRETE APRON / SIDEWALK, REFER TO CIVIL DRAWINGS FOR ADDITIONAL INFORMATION
4. WATERPROOFING, REFER TO SPECIFICATIONS
5. PERIMETER SLAB INSULATION AT GRADE
6. CAST-IN-PLACE CONCRETE STEM WALL, REFER TO STRUCTURAL DRAWINGS
7. EXTERIOR INSULATION FINISH SYSTEM (EIFS), REFER TO EXTERIOR ELEVATIONS AND MATERIAL SCHEDULE
8. SCHEDULED WINDOW, REFER TO WINDOW TYPES AND DETAILS
9. CEILING AS SCHEDULE, REFER TO REFLECTED CEILING PLAN FOR TYPE
10. STANDING SEAM ROOFING SYSTEM
11. RATED WALL ASSEMBLY, REFER TO PARTITION TYPES AND LIFE SAFETY PLAN
12. SCHEDULED DOOR, REFER TO DOOR DETAILS AND SCHEDULE
13. INSULATED METAL WALL PANEL, REFER TO EXTERIOR ELEVATION
14. EXPANSION JOINT COVER, REFER TO STRUCTURAL DRAWINGS FOR SEISMIC SEPARATION INFORMATION
15. INSULATED STANDING SEAM METAL ROOF PANEL
16. OVERHEAD ROLL-UP DOOR WITH MID-GRAZING, REFER TO DOOR TYPES AND DOOR SCHEDULE

tsk
314 South Water Street,
Suite 100
Henderson, NV 89015
phone: 702.456.3000
fax: 702.898.6209
www.tska.com

THESE DRAWINGS AND SPECIFICATIONS ARE THE PROPERTY OF TATE SNYDER KIMSEY ARCHITECTS AND MAY NOT BE REPRODUCED OR USED FOR ANY PURPOSE WITHOUT THE ARCHITECTS WRITTEN CONSENT. AS INSTRUMENTS OF SERVICE, THESE DOCUMENTS ARE NOT FINAL AND READY FOR USE, AND THEREFORE NOT VALID, UNLESS THEY ARE SEALED, SIGNED AND DATED.

Copyright, Ltd 2023

Consultant

PLEASE RECYCLE

Project
WEST WENDOVER NEW FS #13

N. GENE L. JONES WAY, WEST WENDOVER, NV 89883

Job No: 22-002.00

Owner
CITY OF WEST WENDOVER

PHASE-1B DESIGN DEVELOPMENT

REVISIONS		
REV	DATE	DESCRIPTION

Sheet Title
WALL SECTIONS

Date: MAY 3, 2023
Sheet No:
A7.11

1.00 DESIGN DATA

1.01 BUILDING CODE - INTERNATIONAL BUILDING CODE 2018
2018 NEVADA STATE BUILDING CODE WITH NORTHERN NEVADA AMENDMENTS

1.02 DESIGN LOADS

A. WIND LOAD

BASIC WIND SPEED (3-SECOND GUST)	115 MPH
RISK CATEGORY	IV
EXPOSURE	C
INTERNAL PRESSURE COEFFICIENT, GCPI	+/- 0.55

THE WIND PRESSURE IN TERMS OF POUNDS PER SQUARE FOOT TO BE USED FOR THE DESIGN OF EXTERIOR COMPONENTS AND CLADDING MATERIALS SHALL BE INDICATED ON THE SHOP DRAWINGS SUBMITTED BY THE SUPPLIER AND CERTIFIED BY A REGISTERED ENGINEER IN THE STATE OF THE PROJECT.

B. ROOF LOADS

LIVE LOAD (L.L.)	20 PSF**
DEAD LOAD (DESIGN D.L.)	20 PSF

C. ROOF SNOW LOAD

GROUND SNOW LOAD, PG	30 PSF
FLAT-ROOF SNOW LOAD, PF	25.2 PSF***
SNOW EXPOSURE FACTOR, CE	1.0
SNOW LOAD IMPORTANCE FACTOR, I	1.2
THERMAL FACTOR, C_T	1.0

D. EARTHQUAKE DESIGN DATA

SEISMIC RISK CATEGORY	IV
IMPORTANCE FACTOR	1.5
SITE CLASS	D
SPECTRAL RESPONSE ACCELERATION S_S	1.538
SPECTRAL RESPONSE ACCELERATION S_1	2.346
SPECTRAL RESPONSE COEFFICIENTS SD_S	0.336
SPECTRAL RESPONSE COEFFICIENTS SD_1	0.178
SEISMIC DESIGN CATEGORY	D
BASIC SEISMIC-FORCE-RESISTING SYSTEM BY PEMB ENGINEER)	STEEL INTERMEDIATE MOMENT FRAMES (APPARTUS BAY – TO BE CONFIRMED
	LIGHT-FRAMED (WOOD) WALLS SHEATHED WITH WOOD STRUCTURAL PANELS (OFFICE)
ANALYSIS PROCEDURE	EQUIVALENT LATERAL FORCE SYSTEM
SEISMIC RESPONSE MODIFICATION FACTOR R	4.5 (APPARTUS BAY – TO BE CONFIRMED BY PEMB ENGINEER) 6.5 (OFFICE)
SEISMIC RESPONSE COEFFICIENTS C_S	0.112 (APPARTUS BAY – TO BE CONFIRMED BY PEMB ENGINEER) 0.078 (OFFICE)
DESIGN BASE SHEAR	XXX K (APPARTUS BAY – TO BE CONFIRMED BY PEMB ENGINEER) 9.3 K (OFFICE)

E. SLAB ON GRADE – SEE LOADING PLAN

**REDUCIBLE PER IBC, SECTION 1607.12
***PLUS SNOW ACCUMULATION AS REQUIRED BY IBC, SECTION 1608

2.00 DESIGN DATA

2.01 THE PROJECT IS NOT DESIGNED FOR FUTURE EXPANSION.

3.00 DIMENSIONS

3.01 BEFORE STARTING WORK, THE CONTRACTOR SHALL VERIFY ALL DIMENSIONS ON THE SITE, AND REPORT ANY DISCREPANCIES IMMEDIATELY TO THE ENGINEER.

3.02 THE CONTRACTOR, BEFORE STARTING ANY WORK, SHALL CHECK ALL DIMENSIONS GIVEN ON THE STRUCTURAL DRAWINGS, RELATING TO GRID LINES, COLUMN AND WALL LOCATIONS, STRUCTURAL AND FINISHED FLOOR ELEVATIONS, MEMBER SIZES, ETC., WITH THE ARCHITECTURAL, TRAFFIC, AND CIVIL DRAWINGS. IF ANY DISCREPANCY IS NOTICED, IT SHALL BE IMMEDIATELY BROUGHT TO THE ATTENTION OF THE ARCHITECT AND THE ENGINEER, AND WORK SHALL NOT COMMENCE UNTIL INSTRUCTIONS ARE RECEIVED FROM THE ENGINEER

3.03 THE CONTRACTOR SHALL REFER TO THE ENGINEER FOR INSTRUCTIONS FOR ANY DIMENSION NOT GIVEN ON OR OBTAINABLE FROM THE DRAWINGS. THE CONTRACTOR SHALL NOT USE SCALE TO OBTAIN OR VERIFY ANY DIMENSION SHOWN ON THESE DRAWINGS.

4.00 DOCUMENTS AND LIMITATIONS

4.01 THIS STRUCTURAL DOCUMENT, TOGETHER WITH THE CONCEPTS AND DESIGNS PRESENTED HEREIN, AS AN INSTRUCMENT OF SERVICE, ARE INTENDED ONLY FOR THE SPECIFIC PURPOSE AND CLIENT FOR WHICH IT WAS PREPARED. REUSE OF AND IMPROPER RELIANCE ON THIS DOCUMENT WITHOUT WRITTEN AUTHORIZATION AND ADAPTATION BY KIMLEY-HORN AND ASSOCIATES, INC. SHALL BE WITHOUT LIABILITY TO KIMLEY-HORN AND ASSOCIATES, INC.

4.02 IT IS UNDERSTOOD THAT THE STRUCTURAL ENGINEER OF RECORD MAKES NO WARRANTY, EITHER EXPRESSED OR IMPLIED, AS TO FINDINGS, DESIGNS, RECOMMENDATIONS, SPECIFICATIONS, OPINION, OR PROFESSIONAL ADVICE, EXCEPT THAT THESE INSTRUMENTS OF SERVICE HAVE BEEN PREPARED IN ACCORDANCE WITH THE CURRENT GENERALLY ACCEPTED PROFESSIONAL ENGINEERING PRACTICES.

4.03 ALL NON-STRUCTURAL ELEMENTS INDICATED ON THE STRUCTURAL DRAWINGS HAVE BEEN SHOWN IN GENERAL RELATIONSHIP TO THE STRUCTURAL ELEMENTS. ACCORDINGLY, THEY SHALL NOT BE ASSUMED TO BE ACCURATE AND REFERENCE MUST BE MADE TO THE APPROPRIATE CONSULTANT(S) PLANS AND SPECIFICATIONS.

4.04 EXISTING CONSTRUCTION AND GRIDLINES MAY BE SHOWN FOR REFERENCE. THIS INFORMATION WAS TAKEN FROM RECORD DOCUMENTS PROVIDED BY THE OWNER. IT SHALL BE THE CONTRACTOR'S RESPONSIBILITY TO FIELD–VERIFY THE EXISTING MEMBER SIZES, ELEVATIONS AND DIMENSIONS PRIOR TO BEGINNING WORK IN A GIVEN AREA.

5.00 CONSTRUCTION SAFETY

5.01 IT IS UNDERSTOOD THAT THE CONTRACTOR IS SOLELY RESPONSIBLE FOR INITIATING, MAINTAINING, AND SUPERVISING ALL SAFETY PRECAUTIONS AND PROGRAMS IN CONNECTION WITH THE WORK ON THE PROJECT. THE CONTRACTOR SHALL TAKE ALL NECESSARY PRECAUTIONS FOR THE SAFETY OF THE PERSONS AND PROTECT THEM AGAINST INJURY. LIKEWISE, THE CONTRACTOR SHALL PROTECT ALL PROPERTY AGAINST DAMAGE AND LOSS.

5.02 THE CONTRACTOR SHALL COMPLY WITH ALL APPLICABLE LAWS, ORDINANCES, RULES, REGULATIONS, AND ORDERS OF ANY PUBLIC BODY HAVING JURISDICTION FOR THE SAFETY OF PERSONS AND PROPERTY.

5.03 THE CONTRACTOR'S DUTIES AND RESPONSIBILITIES FOR THE SAFETY AND PROTECTION OF THE WORK SHALL CONTINUE UNTIL SUCH TIME AS THE WORK IS SATISFACTORILY COMPLETED, AND THE ENGINEER HAS ISSUED A NOTICE TO THAT EFFECT TO THE OWNER AND THE CONTRACTOR.

5.04 ALL STRUCTURAL MEMBERS SHOWN HEREIN HAVE BEEN DESIGNED FOR THE FINAL DESIGN LOADS PROVIDED IN THIS DOCUMENT IN THE FINAL ERECTED CONDITION SHOWN HEREIN. THE CONTRACTOR IS RESPONSIBLE FOR CONDITIONS ENCOUNTERED DURING ERECTION AND HANDLING, AND NECESSARY TEMPORARY BRACING AND SHORING. SHORING AND BRACING SHALL BE DESIGNED TO PRECLUDE ANY STRUCTURAL ELEMENT FROM BEING OVERSTRESSED AT ANY POINT DURING CONSTRUCTION. SHORING SHALL BE DESIGNED BY A PROFESSIONAL ENGINEER LICENSED IN THE STATE OF THE PROJECT AND DRAWINGS SHALL BE SIGNED AND SEALED.

6.00 FORMWORK, SHORING, AND RE SHORING

6.01 THE CONTRACTOR SHALL EMPLOY, AT HIS EXPENSE, A FORMWORK/SHORING ENGINEER REGISTERED IN THE STATE OF THE PROJECT TO CONTROL ALL OPERATIONS RELATING TO DESIGN, INSTALLATION, AND REMOVAL OF ALL FORMWORK, SHORING, AND RESHORING.

6.02 CONTRACTOR SHALL SUBMIT SHOP DRAWINGS FOR FABRICATION, ERECTION, SUPPORT, AND BRACING OF FORMWORK, SHORING, AND RESHORING PROCEDURES FOR THE ENGINEER'S RECORDS.

6.03 PRIOR TO PLACEMENT OF CONCRETE, THE FORMWORK/SHORING ENGINEER SHALL INSPECT THE SHORING (AND AGAIN IF THERE ARE ANY CHANGES IN THE METHOD OF SHORING", TO VERIFY THAT THE SHORING INSTALLATION IS IN CONFORMANCE WITH THE SHORING DRAWINGS. A WRITTEN STATEMENT OF COMPLIANCE SIGNED BY THE SHORING ENGINEER SHALL BE SUBMITTED TO THE OWNER.

6.04 CONTINUOUS SHORING SHALL BE PROVIDED AT THE CENTER OF ALL SLAB SPANS AND BEAM SPANS FOR A MINIMUM OF 14 DAYS, WHERE NOT POST-TENSIONED OR OTHERWISE APPROVED BY THE ENGINEER.

7.00 SHOP DRAWINGS

7.01 REVIEW OF SHOP DRAWINGS BY THE ENGINEER IS LIMITED TO COMPLIANCE OF THE COMPLETED STRUCTURE WITH THE DESIGN CONCEPT AND INFORMATION GIVEN IN THE CONTRACT DOCUMENTS. THE CONTRACTOR IS SOLELY RESPONSIBLE FOR DIMENSIONS, QUANTITIES, PERFORMANCE, SAFETY, COORDINATION WITH OTHER WORK, AND ALL OTHER REQUIREMENTS OF THE CONTRACT DOCUMENTS. REVIEW DOES NOT AUTHORIZE CHANGES TO CONTRACT.

7.02 THE CONTRACTOR SHALL SUBMIT SHOP DRAWINGS TO THE ENGINEER FOR HIS REVIEW IN ACCORDANCE WITH A SCHEDULE OF SUBMITTALS ACCEPTABLE TO THE ENGINEER. THESE SHOP DRAWINGS SHALL HAVE BEEN CHECKED BY AND STAMPED WITH THE APPROVAL OF THE CONTRACTOR, AND IDENTIFIED AS THE ENGINEER MAY REQUIRE. THE DATA SHOWN ON THE SHOP DRAWINGS SHALL BE COMPLETE WITH RESPECT TO DIMENSIONS, DESIGN CRITERIA, AND DULY SIGNED AND SEALED BY A PROFESSIONAL ENGINEER REGISTERED IN THE STATE OF THE PROJECT.

8.00 DEFERRED SUBMITTALS

8.01 THE FOLLOWING SUBMITTALS ARE DEFERRED FOR THEIR DESIGN TO BE PROVIDED BY THE SUPPLIER:
A. PRE-ENGINEERED METAL BUILDING AND BASE PLATES
B. WOOD ROOF TRUSS
C. ATTACHMENT OF EXTERIOR WALL OR ROOF MOUNTED ASSEMBLIES INCLUDING, BUT NOT LIMITED TO ROOF HATCHES, LOUVERS, ETC
D. TEMPORARY EARTH RETENTION SYSTEMS AND UNDERPINNING.
E. TEMPORARY SHORING AND RESHORING SYSTEMS.

8.02 DOCUMENTS FOR THE DEFERRED SUBMITTAL ITEMS SHALL BE SUBMITTED A MINIMUM OF 30 DAYS BEFORE ITEMS ARE TO BE INSTALLED. THESE ITEMS ARE TO BE REVIEWED BY THE GENERAL CONTRACTOR AND THE ENGINEER OF RECORD FOR GENERAL CONFORMANCE WITH THE CONSTRUCTION DOCUMENTS. REFER TO THE PROJECT MANUAL FOR DEFERRED SUBMITTAL DESIGN QUALIFICATIONS AND ADDITIONAL DEFERRED SUBMITTAL REQUIREMENTS.

9.00 FIELD MODIFICATION

9.01 WRITTEN AUTHORIZATION FROM THE STRUCTURAL ENGINEER OF RECORD IS REQUIRED FOR ALL FIELD MODIFICATIONS TO THE STRUCTURAL SYSTEM INCLUDING, BUT NOT LIMITED TO, BEAM AND COLUMN CONNECTIONS, JOIST AND JOIST GIRDER CONNECTIONS, JOIST BRIDGING, CUTTING OR DRILLING THROUGH ANY STRUCTURAL ELEMENT, CUTTING OR THE RELOCATION OF PT. OR MILD STEEL REINFORCEMENT, EMBED PLATES AND BOLTS, TILT-UP AND PRECAST WALL CONNECTIONS, ETC.

10.00 SPECIAL INSPECTIONS

10.01 SPECIAL INSPECTIONS WILL BE PROVIDED IN COMPLIANCE WITH THE STATEMENT OF SPECIAL INSPECTIONS

10.02 OWNER WILL ENGAGE A SPECIAL INSPECTOR AND QUALIFIED TESTING AND INSPECTING AGENCY TO PERFORM FIELD TESTS AND INSPECTIONS, AND PREPARE TEST REPORTS.

10.03 THE GENERAL CONTRACTOR SHALL ASSIST AND COOPERATE WITH AN INDEPENDENT TESTING LABORATORY (TO BE RETAINED BY THE OWNER) WHICH SHALL CONDUCT ALL THE SPECIFIED TESTS REQUIRED FOR THE PROJECT AND REPORT THE RESULTS OF THESE TESTS DIRECTLY AND PROMPTLY TO THE ENGINEER FOR HIS REVIEW.

10.04 CONTRACTOR SHALL NOTIFY SPECIAL INSPECTOR AND TESTING AGENCY 48 HOURS IN ADVANCE OF ITEMS REQUIRED FOR SPECIAL INSPECTION.

10.05 ALL SPECIAL INSPECTION MONTHLY REPORTS SHALL BE SIGNED AND SEALED BY AN ENGINEER LICENSED IN THE STATE OF_____, WHO HAS RESPONSIBLE CHARGE OF THE SPECIAL INSPECTIONS PROGRAM.

10.06 A SPECIAL INSPECTIONS MEETING SHALL BE HELD ON SITE WITH ENGINEER OF RECORD, CONSTRUCTION COORDINATOR, INDEPENDENT TESTING AGENCY, AND SPECIAL INSPECTOR TO CLARIFY ALL SPECIAL INSPECTION REQUIREMENTS PRIOR TO BEGINNING WORK.

11.00 FOUNDATIONS

11.01 FOUNDATIONS, RETAINING & BASEMENT WALLS, FOUNDATION DRAINAGE, SLABS ON GRADE & OTHER ITEMS RELATED TO THE SOILS ARE DESIGNED & SHALL BE CONSTRUCTED IN ACCORDANCE WITH THE RECOMMENDATIONS OF SUMMIT ENGINEERING CORPORATION JOB NO. 3-82965 DATED NOVEMBER 25, 2022.

11.02 DESIGN NET SOIL BEARING CAPACITY IS AS FOLLOWS:

SPREAD FOOTINGS	2,500 PSF
STRIP FOOTINGS	2,500 PSF

11.03 ALLOWABLE ACTIVE PRESSURE 35 PSF/ FT

11.04 ALLOWABLE PASSIVE PRESSURE 407 PSF/FT

11.05 COEFFICIENT OF FRICTION 0.32

11.06 MINIMUM DEPTH FROM EXTERIOR GRADE TO BOTTOM OF BUILDING PERIMETER FOOTINGS SHALL BE 3'-0".

11.07 SLABS ON GRADE ARE DESIGNED USING A MODULUS OF SUBGRADE REACTION OF 200 PCI.

11.08 ALL UNDERPINNING OF EXISTING FOUNDATIONS THAT MAY BE REQUIRED FOR A TEMPORARY OR PERMANENT CONDITION, SHALL BE THE SOLE RESPONSIBILITY OF THE GENERAL CONTRACTOR. PRIOR TO THE WORK BEING PERFORMED, DRAWINGS AND CALCULATIONS FOR THE PROPOSED METHOD OF UNDERPINNING, SIGNED BY A PROFESSIONAL ENGINEER, SHALL BE PROVIDED TO THE ENGINEER OF RECORD FOR REVIEW.

12.00 CONCRETE MATERIAL PROPERTIES

12.01 CONCRETE STRENGTH: F'C PSI
A. FOOTINGS, 4500
B. FOUNDATION WALLS 4500
C. INTERIOR SLAB-ON-GRADE 4000

13.00 REINFORCING

13.01 MATERIAL PROPERTIES:

	FY, KSI	ASTM
A. ALL BARS UNLESS NOTED	60	A615
B. TIES & STIRRUP	60	A615
C WELDED WIRE FABRIC (SMOOTH)	65	A185
D. POST-TENSIONING STRAND	270 FPU	A416
E WELDABLE REBAR	60	A706

14.00 CAST-IN-PLACE

14.01 ALL CONCRETE SHALL BE DESIGNED AND CONSTRUCTED IN ACCORDANCE WITH IBC CHAPTER 19 & ACI-318, LATEST CODE ADOPTED EDITION.

14.02 ALL REINFORCING SHALL BE DETAILED, FABRICATED & PLACED IN ACCORDANCE WITH CRSI "MANUAL OF STANDARD PRACTICE", LATEST EDITION.

14.03 ALL CAST IN PLACE CONCRETE AND POST INSTALLED ANCHORS SHALL BE DESIGNED IN ACCORDANCE WITH APPENDIX D OF ACI 318 AS MODIFIED BY THE APPLICABLE BUILDING CODE.

14.04 SPACING OF CONSTRUCTION OR CONTROL JOINTS IN WALLS EXPOSED TO VIEW SHALL NOT EXCEED 40 FEET UNLESS SPECIFICALLY NOTED OTHERWISE ON THE DRAWINGS. CUT HALF OF THE HORIZONTAL REINFORCING AT CONTROL JOINTS.

14.05 SLEEVES EMBEDDED IN SLABS AND WALLS SHALL BE LOCATED CLEAR BETWEEN REINFORCING BARS AND SHALL MAINTAIN CLEAR SPACING EQUAL TO THE DIAMETER OF THE LARGEST SLEEVE IN ANY DIRECTION. SLEEVE GROUPS THAT DO NOT COMPLY WITH THE ABOVE REQUIREMENTS SHALL BE CONSIDERED AS AN OPENING AND REINFORCED PER NOTE BELOW.

14.06 UNLESS NOTED OTHERWISE ON THE DRAWINGS: PROVIDE EXTRA REINFORCING ON ALL SIDES OF ALL MISCELLANEOUS WALL AND SLAB OPENINGS EQUAL TO ONE HALF THE INTERRUPTED REINFORCING BARS EACH SIDE BUT NOT LESS THAN 2 - #5 FOR EACH LAYER OF REINFORCEMENT. EXTEND BARS CLASS 'B' LAP LENGTH BUT NOT LESS THAN 2 FEET BEYOND EDGE OF OPENINGS. PROVIDE 2 - #4X4'-0" DIAGONAL BARS AT EACH CORNER FOR EACH LAYER OF REINFORCEMENT.

14.07 IN CAST-IN-PLACE CONCRETE WORK, NO OPENINGS SHALL BE PERMITTED IN SLABS WITHIN A DISTANCE OF EIGHT INCHES FROM THE FACE OF A COLUMN OR EDGE OF SLAB. OPENINGS BETWEEN EIGHT TO TWENTY FOUR INCHES FROM THE FACE OF THE COLUMN OR EDGE OF SLAB SHALL NOT GENERALLY BE PERMITTED EXCEPT WITH THE SPECIFIC APPROVAL OF THE ENGINEER. OPENINGS LOCATED GREATER THAN TWO FEET FROM THE FACE OF THE COLUMN OR EDGE OF SLAB ARE GENERALLY PERMITTED, SUBJECT TO APPROVAL OF THE ENGINEER.

14.08 NO DRILLING THROUGH WALLS SHALL BE CARRIED OUT EXCEPT WITH THE SPECIFIC APPROVAL OF THE ENGINEER. SUCH APPROVAL, IF GRANTED, SHALL BE ON A CASE BY CASE BASIS. CONTRACTOR SHALL BE RESPONSIBLE FOR VERIFYING REINF LAYOUT USING NDT PRIOR TO DRILLING INTO CAST CONCRETE .

14.10 DETAILING OF REBAR SHALL BE IN ACCORDANCE WITH THE LATEST REVISION OF THE ACI DETAILING MANUAL, AND CONCRETE REINFORCING INSTITUTE'S LATEST EDITION OF "MANUAL OF STANDARD PRACTICE". ALL SHOP DRAWINGS PERTAINING TO REBAR DETAILS SHALL BE SUBMITTED TO THE ENGINEER FOR HIS REVIEW.CONCRETE MIX DESIGN FOR ALL CONCRETE WORK IS REQUIRED TO BE SUBMITTED TO THE ENGINEER FOR REVIEW.

14.11 CONCRETE SUPPLIER SHALL HAVE A QUALITY CONTROL PROCEDURE FOR THE PRODUCTION OF ALL CONCRETE, WHICH MUST BE ACCEPTABLE TO THE ENGINEER AND MEETS CURRENT ACI STANDARDS.

14.12 CONSTRUCTION JOINTS SHALL BE AS APPROVED BY THE STRUCTURAL ENGINEER AND THE ARCHITECT.

14.13 EMBEDDED ITEMS THAT WILL SUPPORT STRUCTURAL STEEL CONSTRUCTION SHALL BE PLACED WITHIN THE TOLERANCES PRESCRIBED IN THE LATEST EDITION OF THE AISC "CODE OF STANDARD PRACTICE". GENERAL CONTRACTOR SHALL FIELD VERIFY LOCATION OF EMBEDDED ITEMS PRIOR TO FABRICATION AND DELIVERY OF STRUCTURAL STEEL TO THE PROJECT SITE. SHOP DRAWINGS FOR CAST-IN-PLACE CONCRETE SHALL INCLUDE LOCATIONS AND COORDINATION OF ALL EMBEDS INCLUDING PRECAST SUPPORTS.

14.14 LAP SPLICES ARE ALL CLASS B TENSION LAP SPLICES, UNO.

14.15 PROVIDE A 3/4" CHAMFER ON ALL EXPOSED CORNERS OF CONCRETE.

14.16 PROVIDE ISOLATION JOINTS AROUND COLUMNS AT SLAB ON GRADE AREAS.

14.17 THE FOLLOWING MINIMUM CONCRETE COVER SHALL BE PROVIDED FOR REINFORCEMENT:

A. CONCRETE CAST AGAINST & PERMANENTLY EXPOSED TO EARTH	3"
B. CONCRETE EXPOSED TO EARTH OR WEATHER:	
# 5 THRU # 18 BARS	2"
# 5 & SMALLER BARS	1 ½"
C. CONCRETE NOT EXPOSED TO WEATHER OR IN CONTACT WITH GROUND:	
SLABS & WALLS:	
#14 & #18 BARS	1 ½"
#11 & SMALLER BARS	¾"

15.00 STRUCTURAL STEEL

15.01 STRUCTURAL STEEL DESIGN & CONSTRUCTION SHALL CONFORM TO IBC CHAPTER 22, SECTION 2201, AISC "LOAD & RESISTANCE FACTOR DESIGN SPECIFICATION FOR STRUCTURAL STEEL BUILDINGS" & AISC "CODE OF STANDARD PRACTICE" LATEST CODE ADOPTED EDITION, UNO.

15.02 STRUCTURAL STEEL SUPPLIER SHALL SUBMIT SHOP DRAWINGS AND CALCULATIONS CERTIFIED BY A PROFESSIONAL ENGINEER REGISTERED IN THE STATE OF THE PROJECT FOR ALL CAP PLATES, BEARING PLATES, BASE PLATES, STIFFENERS, SPLICES & CONNECTIONS DESIGNED BY THE SUPPLIER.

15.03 STRUCTURAL STEEL SUPPLIER SHALL FURNISH BOLTS AT COLUMNS AND ELSEWHERE FOR OSHA CONNECTIONS. BOLT HOLES IN BEAM TOP FLANGE SHALL BE MAXIMUM 9/16" DIA. FOR "K" SERIES JOISTS AND 13/16" DIA. FOR "LH" SERIES JOISTS. STRUCTURAL STEEL AND JOIST SUPPLIERS SHALL COORDINATE OSHA CONNECTION LOCATIONS.

15.04 PROVIDE PROTECTIVE ASPHALTIC COATING OR EQUAL AROUND STRUCTURAL STEEL BELOW GRADE.

15.05 IN LIEU OF THE FABRICATION TOLERANCES SPECIFIED IN SECTION 6.4.4 OF AISC "CODE OF STANDARD PRACTICE FOR STEEL BUILDINGS AND BRIDGES" BEAMS WITH CAMBERS SHALL BE FABRICATED WITH A CAMBER TOLERANCE OF -0", + 1/2". MILL CAMBERED BEAMS SHALL BE MODIFIED AS NECESSARY IN THE FABRICATION SHOP TO MEET THE ABOVE CRITERIA. SINGLE POINT CAMBERING IS NOT ALLOWED.

15.06 BEAM CAMBERS SHALL BE VERIFIED IN THE FABRICATION SHOP BY AN INDEPENDENT TESTING AGENCY AND THE INSPECTION DOCUMENTATION SHALL BE PROVIDED TO THE STRUCTURAL ENGINEER OF RECORD FOR REVIEW.

15.07 THIS STRUCTURE IS A NON-SELF SUPPORTING STEEL FRAME REQUIRING INTERACTION WITH OTHER ELEMENTS TO PROVIDE THE REQUIRED STABILITY. THE STEEL ERECTOR SHALL PROVIDE TEMPORARY BRACING UNTIL FINAL STABILITY IS PROVIDED. AS A MINIMUM, TEMPORARY BRACING SHALL BE PROVIDED AT EACH GRID IN BOTH DIRECTIONS.

15.08 BOLTED CONNECTIONS SHALL BE 3/4" DIA., A325 BEARING-TYPE WITH THREADS INCLUDED IN THE SHEAR PLANE. UNO, INSTALL BOLTS IN PROPERLY ALIGNED HOLES AND TIGHTEN USING ONE OF THE FOLLOWING METHODS: SNUG-TIGHT CONDITION, TURN-OF-THE-NUT METHOD, A DIRECT TENSION INDICATOR, OR CALIBRATED WRENCH AS DEFINED BY THE LATEST EDITION OF AISC "SPECIFICATION FOR STRUCTURAL JOINTS USING ASTM A325 OR A490 BOLTS".

15.09 SHEAR CONNECTORS SHALL BE 3/4" DIAMETER BY THE TOTAL FLOOR THICKNESS MINUS 1" IN LENGTH, HEADED STUDS PER AISC SPECIFICATION, LATEST EDITION. THE SPECIFIED LENGTH IS THE NET STUD LENGTH AFTER INSTALLATION. STUDS SHALL BE FIELD WELDED TO THE TOP FLANGE OF THE BEAMS THROUGH THE STEEL DECK UNITS USING AUTOMATICALLY TIMED STUD ARC WELDING EQUIPMENT. OTHER WELDING PROCESSES MUST BE APPROVED BY THE STRUCTURAL ENGINEER OF RECORD PRIOR TO INSTALLATION.

15.10 COMPOSITE SLABS SHALL BE POURED TO A CONSISTENT THICKNESS.

15.11 ROOF BEAMS ARE DESIGNED IN ACCORDANCE WITH AISC LRFD SPECIFICATION, CONTINUOUS BEAM PLASTIC DESIGN, LATEST EDITION.

15.12 STRUCTURAL STEEL IN EXTERIOR LOCATIONS SHALL BE GALVANIZED, UNO. SEE ARCH FOR FINAL FINISH OR FIRE PROOFING AT INTERIOR LOCATIONS OR AS NOTED ON THE DRAWINGS.

16.00 STEEL DECK

16.13 ALL STEEL DECKS SHALL BE DESIGNED & CONSTRUCTED IN ACCORDANCE WITH IBC CHAPTER 22, SECTION 2210.1.1 – COLD-FORMED STEEL AND THE STEEL DECK INSTITUTE SPECIFICATIONS AND RECOMMENDATIONS, LATEST CODE ADOPTED EDITION UNO.

16.14 PRE-APPROVED DECK MANUFACTURERS ARE VULCRAFT, WHEELING, AND VERCO. OTHER METAL DECK MANUFACTURERS MAY BE APPROVED PROVIDING THAT THE DECK SPECIFICATIONS MEET OR EXCEED THE SPECIFICATIONS OF THE PRE-APPROVED MANUFACTURERS. METAL DECK SIZE, GAUGE AND TYPE ARE INDICATED ON THE DRAWINGS.

16.15 ROOF DECK SHALL BE PRIME PAINTED AND LAID OUT CONTINUOUS OVER THREE SPANS MINIMUM. YIELD STRESS SHALL BE 33,000 PSI MINIMUM. DECK SUPPLIER SHALL SUBMIT ICC REPORTS SHOWING ALLOWABLE DIAPHRAGM SHEAR VALUES. ERECT IN ACCORDANCE WITH THE REPORT TO MEET THE REQUIRED SHEAR SPECIFIED ON THE DRAWINGS. CONNECTION TO FRAMING MEMBERS SHALL NOT BE LESS THAN THAT SHOWN ON DRAWINGS.

16.16 MINIMUM REQUIREMENTS FOR ROOF DECK FASTENING SHALL BE 5/8" Ø PUDDLE WELDS USING THE WELD PATTERN SHOWN ON THE DRAWINGS AND #10 TEK SCREW SIDELAP FASTENERS PER FASTENING DETAILS SHOWN ON THE DRAWINGS OR PRE-APPROVED EQUAL.

16.17 STRUCTURAL SLAB FORM (METAL CENTERING) SHALL BE UNCOATED AT TOP, PRIME PAINTED AT BOTTOM, DESIGNED FOR THE SPANS AND SLAB DEAD LOADS AS SHOWN ON THE DRAWINGS & INSTALLED IN ACCORDANCE WITH SDI SPECIFICATIONS, LATEST EDITION AND MANUFACTURER'S REQUIREMENTS.

16.18 COMPOSITE METAL FLOOR DECK SHALL BE PHOSPHATIZED/PAINTED AT TOP, PRIME PAINTED AT BOTTOM AND LAID OUT FOR THREE SPANS WHERE POSSIBLE. THE COMPOSITE FLOOR SYSTEM SHALL BE CAPABLE OF SUPPORTING THE SUPERIMPOSED LOADS AS SHOWN ON THE DRAWINGS. THE STEEL DECK SHALL SUPPORT THE WEIGHT OF WET CONCRETE AND OTHER CONSTRUCTION LOADS AS AN UNSHORED FORM DECK. DECK FASTENING SHALL BE PER SDI & MANUFACTURER'S RECOMMENDATIONS BUT NOT LESS THAN THAT SHOWN ON THE DRAWINGS.

16.19 ALL METAL DECK TO BE SPRAY FIREPROOFED SHALL BE GALVANIZED, CLEANED & DEGREASED PRIOR TO SHIPPING. SEE ARCHITECTURAL DRAWINGS FOR EXTENT OF FIREPROOFING.

16.20 CONDUITS ARE NOT PERMITTED IN COMPOSITE SLABS WITHOUT AUTHORIZATION FROM THE STRUCTURAL ENGINEER.

17.00 STEEL

17.01 STEEL MATERIAL PROPERTIES

		FY, PSI	ASTM
A.	STRUCTURAL WIDE FLANGE SHAPES	50,000	A992
B.	OTHER STRUCT. SHAPES & PLATES	36,000	A36
C.	HIGH STRENGTH BOLTS, UNO	92,000 (1" AND SMALLER)	A325
D.	ANCHOR RODS	36,000 UNO	F1554
E.	WELDING ELECTRODES	E70XX	AWS D1.3 CHAPTER 5
F.	DECK WELDING ELECTRODES	E60XX OR E70XX	AWS D1.3 CHAPTER 1
G.	STRUCTURAL PIPES	35,000	A53 GRADE B
H.	RECTANGULAR & SQUARE HSS	46,000	A500 GRADE C
I.	ROUND HSS	42,000	A500 GRADE C
J.	HEADED STUDS, TYPE B (FU = 65,000)	51,000	AWS D1.1 CHAPTER 7

17.02 STRUCTURAL STEEL DESIGN & CONSTRUCTION SHALL CONFORM TO IBC CHAPTER 22, SECTION 2201, AISC "LOAD & RESISTANCE FACTOR DESIGN SPECIFICATION FOR STRUCTURAL STEEL BUILDINGS" & AISC "CODE OF STANDARD PRACTICE" LATEST CODE ADOPTED EDITION, UNO.

17.03 STRUCTURAL STEEL SUPPLIER SHALL FURNISH BOLTS AT COLUMNS AND ELSEWHERE FOR OSHA CONNECTIONS. BOLT HOLES IN BEAM TOP FLANGE SHALL BE MAXIMUM 9/16" DIA. FOR "K" SERIES JOISTS AND 13/16" DIA. FOR "LH" SERIES JOISTS. STRUCTURAL STEEL AND JOIST SUPPLIERS SHALL COORDINATE OSHA CONNECTION LOCATIONS.

17.04 PROVIDE PROTECTIVE ASPHALTIC COATING OR EQUAL AROUND STRUCTURAL STEEL BELOW GRADE.

17.05 IN LIEU OF THE FABRICATION TOLERANCES SPECIFIED IN SECTION 6.4.4 OF AISC "CODE OF STANDARD PRACTICE FOR STEEL BUILDINGS AND BRIDGES" BEAMS WITH CAMBERS SHALL BE FABRICATED WITH A CAMBER TOLERANCE OF -0", + 1/2". MILL CAMBERED BEAMS SHALL BE MODIFIED AS NECESSARY IN THE FABRICATION SHOP TO MEET THE ABOVE CRITERIA. SINGLE POINT CAMBERING IS NOT ALLOWED.

17.06 BEAM CAMBERS SHALL BE VERIFIED IN THE FABRICATION SHOP BY AN INDEPENDENT TESTING AGENCY AND THE INSPECTION DOCUMENTATION SHALL BE PROVIDED TO THE STRUCTURAL ENGINEER OF RECORD FOR REVIEW.

17.07 BOLTED CONNECTIONS SHALL BE 3/4" DIA., A325 BEARING-TYPE WITH THREADS INCLUDED IN THE SHEAR PLANE. UNO, INSTALL BOLTS IN PROPERLY ALIGNED HOLES AND TIGHTEN USING ONE OF THE FOLLOWING METHODS: SNUG-TIGHT CONDITION, TURN-OF-THE-NUT METHOD, A DIRECT TENSION INDICATOR, OR CALIBRATED WRENCH AS DEFINED BY THE LATEST EDITION OF AISC "SPECIFICATION FOR STRUCTURAL JOINTS USING ASTM A325 OR A490 BOLTS".

17.08 SHEAR CONNECTORS SHALL BE 3/4" DIAMETER BY THE TOTAL FLOOR THICKNESS MINUS 1" IN LENGTH, HEADED STUDS PER AISC SPECIFICATION, LATEST EDITION. THE SPECIFIED LENGTH IS THE NET STUD LENGTH AFTER INSTALLATION. STUDS SHALL BE FIELD WELDED TO THE TOP FLANGE OF THE BEAMS THROUGH THE STEEL DECK UNITS USING AUTOMATICALLY TIMED STUD ARC WELDING EQUIPMENT. OTHER WELDING PROCESSES MUST BE APPROVED BY THE STRUCTURAL ENGINEER OF RECORD PRIOR TO INSTALLATION.

17.09 STRUCTURAL STEEL IN EXTERIOR LOCATIONS SHALL BE GALVANIZED, UNO. SEE ARCH FOR FINAL FINISH OR FIRE PROOFING AT INTERIOR LOCATIONS OR AS NOTED ON THE DRAWINGS.

18.00 POST-INSTALLED ANCHORS

18.01 UNLESS OTHERWISE INDICATED ON PLANS, POST-INSTALLED ANCHORS SHALL CONSIST OF THE FOLLOWING ANCHOR TYPES, OR ENGINEER'S APPROVED EQUAL:

SUBSTRATE	ADHESIVE ANCHOR	MECHANICAL ANCHOR
SOLID CONCRETE	HILTI RE 500 SD V3	HILTI KWIK BOLT TZ
	HILTI HY 200 SAFE SET SYSTEM	HILTI KH-EZ SCREW ANCHOR
	SIMPSON SET-XP	SIMPSON STRONG-BOLT

18.02 SUBSTITUTION REQUESTS FOR ALTER

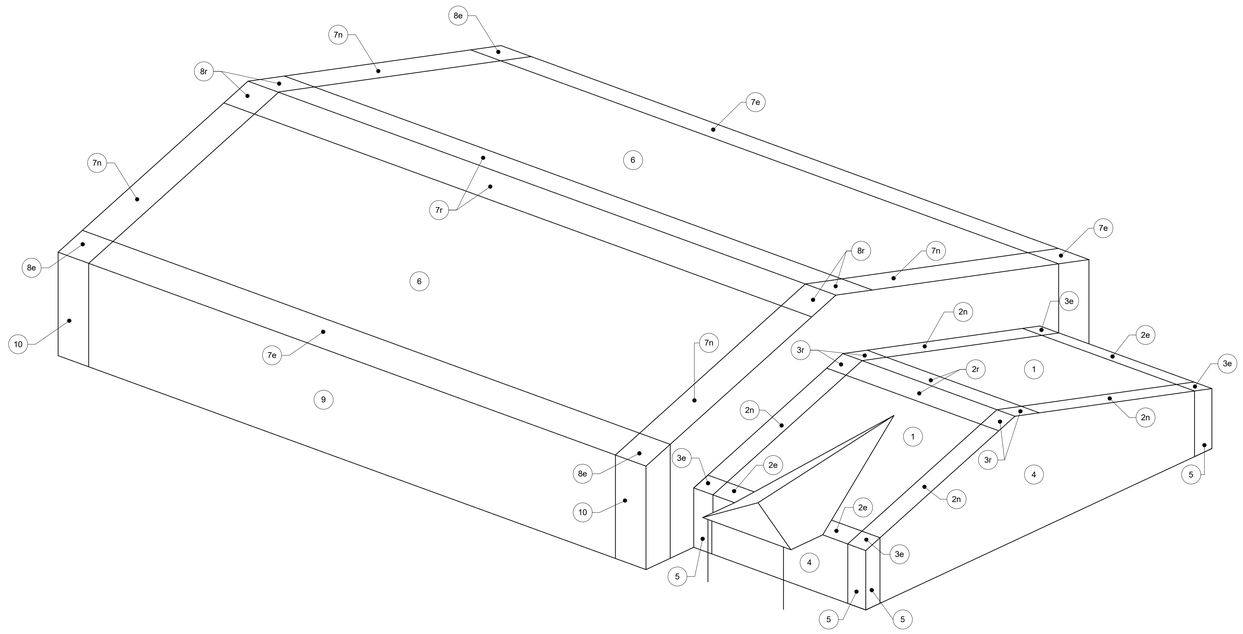

2 S1.02 WIND COMPONENTS AND CLADDING DIAGRAM

NTS

COMPONENTS AND CLADDING DESIGN WIND PRESSURES									
ZONE		AREA ≤ 20 SF		50 SF		200 SF		AREA > 500 SF	
MARK	WIDTH	PRESSURE (PSF)	SUCTION (PSF)	PRESSURE (PSF)	SUCTION (PSF)	PRESSURE (PSF)	SUCTION (PSF)	PRESSURE (PSF)	SUCTION (PSF)
1	-	21.1	-53.0	19.1	-35.2	17.7	-21.8	17.7	-21.8
2e	-	21.1	-53.0	19.1	-35.2	17.7	-21.8	17.7	-21.8
2n	-	21.1	-64.8	19.1	-53.0	17.7	-35.1	17.7	-32.2
2r	-	21.1	-64.8	19.1	-53.0	17.7	-35.1	17.7	-32.2
3e	3'-4"	21.1	-64.8	19.1	-53.0	17.7	-35.1	17.7	-32.2
3r	3'-4"	21.1	-75.0	19.1	-60.1	17.7	-48.8	17.7	-48.8
4	-	31.1	-33.2	29.6	-31.7	27.4	-29.5	26.0	-28.1
5	3'-4"	31.1	-35.4	29.6	-35.4	27.4	-31.0	26.0	-28.1
6	-	22.8	-57.4	20.7	-38.2	19.1	-23.6	19.1	-23.6
7e	-	22.8	-57.4	20.7	-38.2	19.1	-23.6	19.1	-23.6
7n	-	22.8	-70.2	20.7	-57.4	19.1	-38.0	19.1	-34.9
7r	-	22.8	-70.2	20.7	-57.4	19.1	-38.0	19.1	-34.9
8e	8'-8"	22.8	-70.2	20.7	-57.4	19.1	-38.0	19.1	-34.9
8r	8'-8"	22.8	-81.2	20.7	-65.1	19.1	-52.9	19.1	-52.9
9	-	33.7	-35.9	32.1	-34.3	29.7	-32.0	28.1	-30.4
10	8'-8"	33.7	-41.5	32.1	-38.3	29.7	-33.5	28.1	-30.4

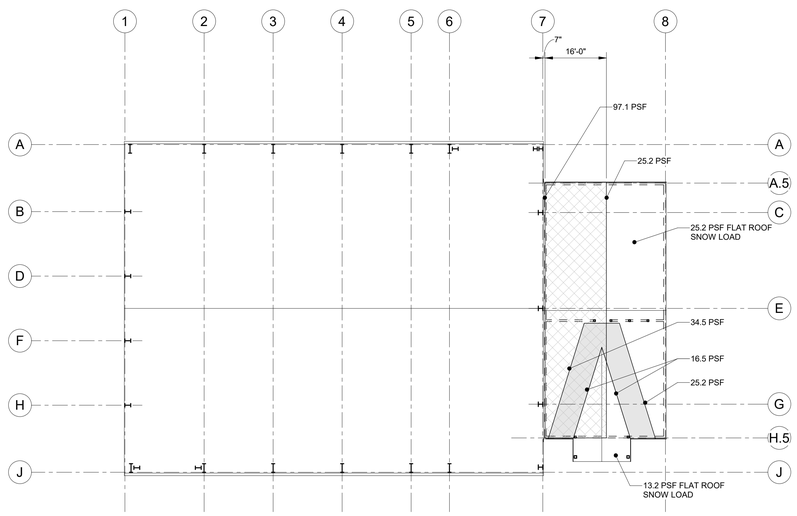

1. S1.02 SNOW DRIFT PLAN

NTS

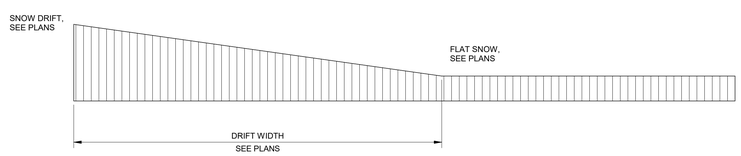

tsk
314 South Water Street,
Suite 100
Henderson, NV 89015
phone: 702.456.3000
fax: 702.898.6209
www.tska.com

THESE DRAWINGS AND SPECIFICATIONS ARE THE PROPERTY OF TATE SNYDER KIMSEY ARCHITECTS AND MAY NOT BE REPRODUCED OR USED FOR ANY PURPOSE WITHOUT THE ARCHITECTS WRITTEN CONSENT.
AS INSTRUMENTS OF SERVICE, THESE DOCUMENTS ARE NOT FINAL AND READY FOR USE, AND THEREFORE NOT VALID, UNLESS THEY ARE SEALED, SIGNED AND DATED.

Consultant

Kimley»Horn

PLEASE RECYCLE

Project

WEST WENDOVER NEW FS #13

ANYWHERE BUT HERE

Job No: 092767002

Owner

CITY OF WEST WENDOVER

NOT FOR CONSTRUCTION

Project Status

REVISIONS		
REV	DATE	DESCRIPTION

Sheet Title

DESIGN LOADS

Date: Issue Date

Sheet No:

S1.02

BIM 360://WEST WENDOVER FIRE STATION/092767002 - WEST WENDOVER FS_STR_R21.rvt

ABBREVIATIONS

A/E	ARCHITECT/ENGINEER
AB	ANCHOR BOLT
ABC	AGGREGATE BASE COURSE
ACC	ACCESSIBLE
ADDL	ADDITIONAL
ADDM	ADDENDUM
ADJ	ADJACENT
AFF	ABOVE FINISHED FLOOR
AFG	ABOVE FINISHED GRADE
AFS	ABOVE FINISHED SLAB
AGGR	AGGREGATE
ALLOW	ALLOWANCE
ALT	ALTERNATE
APPROX	APPROXIMATE
ARCH	ARCHITECT, ARCHITECTURAL
BC	BACK OF CURB
BF	BOTH FACES
BLDG	BUILDING
BM	BEAM; BENCHMARK
BOT	BOTTOM
BTWN	BETWEEN
BW	BOTH WAYS
C&G	CURB AND GUTTER
CANTIL	CANTILEVER
CCW	COUNTERCLOCKWISE
CD	CONSTRUCTION DOCUMENTS
CEM	CEMENT
CGS	CENTER OF GRAVITY OF STRAND
CIP	CAST-IN-PLACE
CJ	CONSTRUCTION JOINT
CL	CENTERLINE
CLG	CEILING
CLL	COLUMN LINE
CLR	CLEAR
CMU	CONCRETE MASONRY UNIT
COL	COLUMN
CONC	CONCRETE
CONN	CONNECTION
CONSTR	CONSTRUCTION
CONT	CONTINUE; CONTINUOUS
COORD	COORDINATE
COV	COVER
CTC	CENTER TO CENTER
CTR	CENTER
CTRL JT	CONTROL JOINT
CW	CLOCKWISE
D	DEPTH
D-B	DESIGN-BUILD
DEFL	DEFLECTION
DEG	DEGREE
DEL	DELETE
DEMO	DEMOLITION
DET	DETAIL
DIA	DIAMETER
DIAG	DIAGONAL
DIM	DIMENSION
DIR	DIRECTION
DIST	DISTANCE
DL	DEAD LOAD
DR	DRAIN; DRIVE
DSGN	DESIGN
DWG	DRAWING
DWL	DOWEL(S)
E	EAST
EA	EACH
EC	EDGE OF CURB
EE	EACH END
EF	EACH FACE
EJ	EXPANSION JOINT
EL	EACH LAYER; ELEVATION
ELEV	ELEVATOR
EMBED	EMBEDMENT
ENGR	ENGINEER
ENTR	ENTRANCE
EOR	ENGINEER OF RECORD
EOS	EDGE OF SLAB
EQ	EQUAL
EQL SP	EQUALLY SPACED
EQUIP	EQUIPMENT
ESP	EXPANSION; EXPOSED
EST	ESTIMATE
EW	EACH WAY
EX / EXIST	EXISTING
EXP BT	EXPANSION BOLT
EXP JT	EXPANSION JOINT
EXST GR	EXISTING GRADE
EXT	EXTERIOR
EXTN	EXTENSION
FD	FLOOR DRAIN
FDTN	FOUNDATION
FF	FINISH FACE
FF EL	FINISH FLOOR ELEVATION
FIN	FINISH
FIN FLR	FINISH FLOOR
FIN GR	FINISH GRADE
FLR	FLOOR
FOC	FACE OF CONCRETE
FOM	FACE OF MASONRY
FOW	FACE OF WALL
FR	FRAME
FRMG	FRAMING
FT	FEET; FOOT
FTF	FACE TO FACE
FTG	FOOTING
FWRK	FORMWORK
G	GIRDER; GROUND
GA	GAGE
GALV	GALVANIZED
GC	GENERAL CONTRACTOR
GEN	GENERAL
GL	GROUND LEVEL
GR BM	GRADE BEAM
GR FL	GROUND FLOOR
HDG	HOT-DIP GALVANIZING
HK	HOOK
HORIZ	HORIZONTAL
HS	HEADED STUD
HT	HEIGHT
ID	INSIDE DIAMETER (DIMENSION)
IF	INSIDE FACE
IN	INCH
INFO	INFORMATION
INSTL	INSTALL
INT	INTERIOR
ISO JT	ISOLATION JOINT
JST	JOIST
JT	JOINT
KIP	THOUSAND POUNDS
KLF	KIPS PER LINEAR FOOT
KSF	KIPS PER SQUARE FOOT
KSI	KIPS PER SQUARE INCH
KWY	KEYWAY
L	ANGLE
LBS	POUNDS
LD	LONG DIRECTION
LF	LINEAR FEET (FOOT)
LL	LIVE LOAD
LLH	LONG LEG HORIZONTAL
LLV	LONG LEG VERTICAL
LN	LANE
LTL	LINTEL
M	MOMENT
MAS	MASONRY
MATL	MATERIAL
MAX	MAXIMUM
MBR	MEMBER
MEAS	MEASURE
MECH	MECHANICAL
MFR	MANUFACTURER
MIN	MINIMUM
MISC	MISCELLANEOUS
MULT	MULTIPLE
N	NORTH
NA	NOT APPLICABLE
NF	NEAR FACE
NIC	NOT IN CONTRACT
NO	NUMBER
NOM	NOMINAL
NORM	NORMAL
NTS	NOT TO SCALE
OC	ON CENTER
OD	OUTSIDE DIAMETER (DIMENSION)
OF	OUTSIDE FACE
OPNG	OPENING
OPP	OPPOSITE
OTO	OUT TO OUT
PAR	PARALLEL
PCC	PRECAST CONCRETE
PCF	POUNDS PER CUBIC FOOT
PEMB	PRE-ENGINEERED METAL BUILDING
PERP	PERPENDICULAR
PL	PLATE; PROPERTY LINE
PRCST	PRECAST
PRELIM	PRELIMINARY
PRKG	PARKING
PROJ	PROJECT
PROP	PROPERTY
PS CONC	PRESTRESSED CONCRETE
PSF	POUNDS PER SQUARE FOOT
PSI	POUNDS PER SQUARE INCH
PT	POST TENSIONED
PT CONC	POST TENSIONED CONCRETE
QTR	QUARTER
R	RADIUS
RC	REINFORCED CONCRETE
RCB	REINFORCED CONCRETE BOX
RCP	REINFORCED CONCRETE PIPE
RD	ROOF DRAIN
REBAR	REINFORCING STEEL BAR
REF	REFERENCE
REINF	REINFORCEMENT
REP	REPAIR
REPL	REPLACE
REQD	REQUIRED
REV	REVISION
RFI	REQUEST FOR INFORMATION
RFP	REQUEST FOR PROPOSAL
RT/W	RETAINING WALL
S	SOUTH
SCHED	SCHEDULE
SD	SHOP DRAWINGS; SCHEMATIC DESIGN; SHORT DIRECTION
SEC	SECTION
SIM	SIMILAR
SL	SNOW LOAD
SOG	SLAB-ON-GRADE
SP EL	SPOT ELEVATION
SPA	SPACES
SPEC	SPECIFICATION
SQ	SQUARE
STD	STANDARD
STL	STEEL
STL JST	STEEL JOIST
STOR	STORAGE
STRUCT	STRUCTURAL
T&B	TOP AND BOTTOM
TB	THROUGH BOLT
TE	TOP ELEVATION
TEMP	TEMPERATURE; TEMPORARY
TFF	TOP OF FINISH FLOOR
THK	THICKNESS
THRU	THROUGH
TO	TOP OF ___
TO FDN	TOP OF FOUNDATION
TOB	TOP OF BEAM
TOC	TOP OF CONCRETE (CURB)
TOC FTG	TOP OF CONCRETE FOOTING
TOC WALL	TOP OF CONCRETE WALL
TOF	TOP OF FLOOR (FOOTING)
TOM	TOP OF MASONRY
TOS	TOP OF SLAB
TOW	TOP OF WALL
TYP	TYPICAL
UNIF	UNIFORM
UNO	UNLESS NOTED OTHERWISE
V	SHEAR
VAR	VARIES
VEH	VEHICLE
VERT	VERTICAL
VIF	VERIFY IN FIELD
W	WEST
W/	WITH
W/O	WITHOUT
W/W	WALL TO WALL
WF	WIDE FLANGE
WL	WIND LOAD
WP	WATERPROOFING
WWF	WELDED WIRE FABRIC

SPREAD FOOTING SCHEDULE

MARK	LENGTH	WIDTH	THICKNESS	BOT REINF	TOP REINF	COMMENTS
F3.0	3'-0"	3'-0"	1'-0"	(4) #4 EW	(4) #4 EW	
F5.0	5'-0"	5'-0"	1'-0"	(5) #5 EW	(5) #5 EW	
F7.0	7'-0"	7'-0"	1'-0"	(6) #5 EW	(6) #5 EW	

CONCRETE PEDESTAL SCHEDULE

MARK	SIZE (WxL)	VERT REINF	TIES	COMMENTS
P1	1'-0"X1'-0"	(8) #4	#3 AT 6" OC	
P2	2'-3"X2'-3"	(16) #6	#4 AT 12" OC	
P3	3'-0"X3'-0"	(20) #8	#4 AT 12" OC	PLACE VERTICAL REINFORCEMENT A.S. IN 6/S5.01 WITH (4)-#5 SHEAR REINF. A.S.
P5.25	5'-3"X5'-3"			PLACE REINFORCEMENT AS DETAILED FOR P2 AND P3 UNDER THE CORRESPONDING COLUMNS

BASE PLATE SCHEDULE

MARK	BASE PL	ANCHOR RODS	COMMENTS
BP1	-	HEAVY HEX HEAD, F1554 GR 55, 5/8" DIA x 10" EFF	BASEPLATE DIMENSIONS AND EDGE DISTANCES WERE PROVIDED BY THE PEMB SUPPLIER AND ARE NOTED AS THE BASIS OF DESIGN FOR THE ANCHOR SIZE AND EMBEDMENT DEPTH. CONTRACTOR TO CONFIRM BASE PLATE SIZE AND LAYOUT WITH THE PEMB SUPPLIER PRIOR TO INSTALLING ANCHORS.
BP2	-	HEAVY HEX HEAD, F1554 GR 55, 7/8" DIA x 10" EFF	
BP3	-	-	

STRIP FOOTING SCHEDULE

MARK	WIDTH	THICKNESS	BOT REINF	TOP REINF	COMMENTS
SF2.5	2'-6"	1'-0"	#4 @ 9" OC	#4 @ 9" OC	
SF3.75	4'-5"	1'-0"	#4 @ 9" OC	#4 @ 9" OC	

ROOF TRUSS SCHEDULE RTX

	TRUSS TYPE	TRUSS PROFILE
MARK	DESCRIPTION	DESCRIPTION
RT1	HIP TRUSS	3 POINT BEARING
RT2	HIP TRUSS	2 POINT BEARING

NOTES:

1. TRUSS MANUFACTURER TO COORDINATE WITH MECHANICAL, PLUMBING AND ARCHITECTURAL DRAWINGS ABOVE GUESS ROOM AREAS FOR MECHANICAL DUCTS, PIPES, ETC., AND DESIGN TRUSS TO SUPPORT ADDITIONAL LOAD WHERE REQUIRED.
2. TRUSS MANUFACTURER TO REDUCE SPACING AS REQUIRED.
3. PROVIDE DOUBLE TRUSSES UNDER MECHANICAL ROOF ROP UNIT AS NEEDED.
4. ALL GIRDER TRUSSES TO BE DESIGNED FOR AN AXIAL WIND/SEISMIC FORCE OF 4000# MIN (ASD).
5. TRUSS MANUFACTURER TO COORDINATE WITH MECHANICAL AND ARCHITECTURAL DRAWINGS TO LOCATE AND PROVIDE REQUIRED OPENING BETWEEN CHORDS FOR DUCT WORKS THROUGH TRUSSES WHERE NEEDED..
6. TRUSS MANUFACTURER TO COORDINATE WITH ARCHITECTURAL DRAWINGS FOR EXACT DEPTH OF TRUSS.

HOLD-DOWN SCHEDULE

HOLDOWN NOTES:

A. HOLDOWN INSTALLATION PER TYPICAL DETAILS.
B. AT CONTRACTOR'S OPTION - SIMPSON ATS HOLDOWN SYSTEM MAY BE USED IN LIEU OF HOLDOWNS SHOWN PROVIDED ENGINEERED DRAWINGS AND CALCULATIONS ARE SUBMITTED AND APPROVED BY ENGINEER OF RECORD (EOR).

MARK	SIMPSON HOLDOWN/ STRAP	SIMPSON ANCHOR			POST SIZE U.N.O.		POST ATTACHMENT	REMARKS
		DIA	MODEL	EMBED "le"	6" WALL	4" WALL		
1	HDU5-SDS2.5	5/8"	SB5/8X 24	18"	(3) 2x6 MIN	4x6 MIN	(14) SDS 1/4" X 2 1/2"	NOTES 2 AND 3
2	HDU8-SDS2.5	7/8"	SSTB28	24 7/8"	(3) 2x6 MIN	4x8 MIN	(20) SDS 1/4" X 2 1/2"	NOTES 2 AND 3

NOTES:

1. ALLOW BUILDING TO SHRINK PRIOR TO INSTALLING BOTH ENDS OF THE STRAPS TO MINIMIZE POTENTIAL FOR STRAP BUCKLING. SIMPSON HDU5 MAY BE USED IN LIEU OF HOLDOWN STRAPS 1 TO 3.
2. WHEN HOLDOWN ANCHOR IS CONNECTED TO ELEVATED CONCRETE SLAB, USE SIMPSON SAR TYPE ANCHOR WITH SAME DIAMETER. ANCHOR EMBEDMENT DEPTH AND INSTALLATION PER TYPICAL DETAILS.
3. WHEN HOLDOWN IS CONNECTED TO INTERIOR SLAB ON GRADE USE SIMPSON PAB5 AT 5/8" DIA ANCHORS AND PAB7 AT 7/8" DIA WITH 6 1/2" AND 8 1/2" EMBEDMENT RESPECTIVELY.

TYPICAL HEADER SCHEDULE

HEADERS AND WINDOW SILLS

OPENING WIDTH	BEARING WALLS MINIMUM HEADER SIZE		NON-BEARING WALLS MINIMUM HEADER SIZE	SILL PLATES AT WINDOWS		FACE NAILS AT HEADER AND WINDOW SILL
	6" WALL	4" WALL	6" AND 4" WALLS	6" WALL	4" WALL	
0'-0" - 3'-6"	(3) 2x6	4x8	(1) 2x HORIZONTAL	2x6	2x4	(3) 16d
3'-6" - 5'-0"	(3) 2x10	4x10	(1) 2x6 VERTICAL (1) 2x HORIZONTAL	2x6	(2) 2x4	(3) 16d
5'-1" - 6'-0"	(3) 2x10	4x10	(1) 2x8 VERTICAL (1) 2x HORIZONTAL	2x6	(2) 2x4	(4) 16d
6'-1" - 7'-0"	(3) 2x12	4x12	(1) 2x8 VERTICAL (1) 2x HORIZONTAL	2x6	(2) 2x4	(6) 16d
7'-1" - 8'-0"	(3) 2x12	3 1/8X12 GLB	(1) 2x8 VERTICAL (2) 2x HORIZONTAL	(2) 2x6	(2) 2x4	(8) 16d
8'-1" - 9'-0"	6x14	3 1/8X12 GLB	(1) 2x8 VERTICAL (2) 2x HORIZONTAL	(2) 2x6	(3) 2x4	(8) 16d

KING AND TRIMMER STUDS

	MAXIMUM OPENING WIDTH	KING STUDS		TRIMMER STUDS	
		6" WALL	4" WALL	6" WALL	4" WALL
AT 1ST FLOOR WALLS	4'-0"	2x6	2x4	2x6	2x4
	5'-0"	2x6	2x4	2x6	(2) 2x4
	6'-0"	2x6	2x4	2x6	(2) 2x4
	7'-0"	2x6	(2) 2x4	2x6	(2) 2x4
	8'-0"	(2) 2x6	(2) 2x4	2x6	(2) 2x4
	9'-0"	(2) 2x6	(2) 2x4	(2) 2x6	(2) 2x4

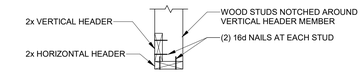

TYPICAL "L" SHAPED HEADER AT NON-BEARING WALLS

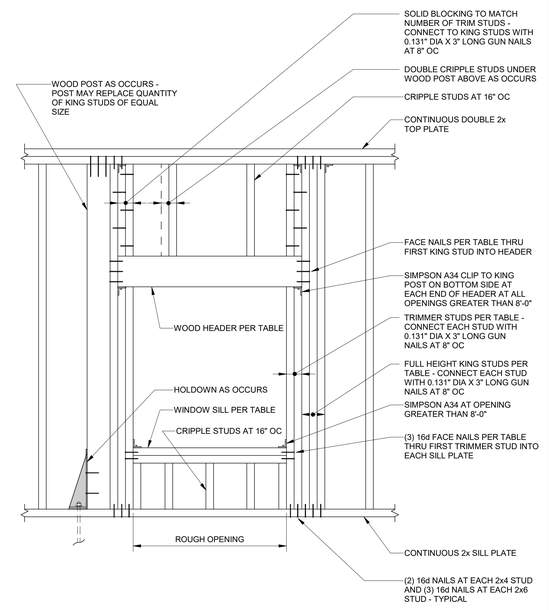

WOOD SHEAR WALL (SW) SCHEDULE

GENERAL (SW) NOTES:

A. SHEAR WALL CONFIGURATION AND CONSTRUCTION INFORMATION PER TYPICAL SHEAR WALL ELEVATIONS, AND
B. PROVIDE (2) STUDS MINIMUM AT EACH END OF SHEAR WALL U.N.O. END STUDS SHALL RECEIVE EDGE NAILING.
C. ALL BLOCKING IN WALLS SHALL MEET OR EXCEED STUD GRADE.
D. PANEL JOINTS SHALL OCCUR AT CENTERLINE OF STUDS OR BLOCKING.
E. VERIFY WITH ARCHITECT IF ADDITIONAL LAYERS OF GYP BOARD ARE REQUIRED FOR FINISHES.
F. CONTRACTOR'S OPTION - PROVIDE CLIPS AT TOP AND SILL PLATES BY ALTERNATE MANUFACTURER THAT MEET OR EXCEED CAPACITY OF CLIPS INDICATED IN SCHEDULE.
G. HOLDOWN INFORMATION PER HOLDOWN SCHEDULE.
H. PROVIDE NAILING AT CLIP ANGLES PER MANUFACTURER'S RECOMMENDATIONS.
I. TOP AND SILL PLATE NAILING SHALL BE STAGGERED WHERE NAILS ARE SPACED AT 2" OC.
J. FASTENER SPACING AT INTERIOR SUPPORTS SHALL BE 12" O.C. UNLESS NOTED OTHERWISE.
K. PROVIDE PLATE WASHERS AT SILL PLATE ANCHORS PER TYPICAL DETAIL
L. WOOD STUDS IN A SHEARWALL SHALL NOT BE SPACED MORE THAN 16" OC.

MARK	WALL PANEL CONSTRUCTION	WALL PANEL FASTENING			TOP AND SILL PLATE FASTENING			ALLOWABLE SHEAR (PLF)	
		EDGE SPACING	MINIMUM FASTENER SIZE	PER NOTES	JOIST/TRUSS OR BLOCKING TO TOP PLATE (a)	SILL PLATE TO WOOD FRAMING (b)	SILL PLATE TO CONCRETE (10)	WIND	SEISMIC
					SIMPSON CLIP	COMMON OR BOX NAILS			
SW1	(1) LAYER 3/8" OSB OR PLYWOOD (1) SIDE OF WALL - BLOCKED	6"	10d COMMON OR GALVANIZED BOX NAIL	7 AND 9	A35 OR LTP4 AT 16" OC	16d AT 16" OC OR 12d AT 4" OC	5/8" DIA ANCHORS AT 32" OC	365	260
SW2	(1) LAYER 3/8" OSB OR PLYWOOD (1) SIDE OF WALL - BLOCKED	4"	10d COMMON OR GALVANIZED BOX NAIL	7 AND 9	A35 OR LTP4 AT 12" OC	16d AT 3" OC OR 12d AT 2" OC	5/8" DIA ANCHORS AT 24" OC	645	460

NOTES:

1. FASTENER SPACING AT INTERMEDIATE SUPPORTS SHALL MATCH THE SCHEDULED EDGE SPACING.
2. ALL WALLBOARD NAILS INDICATED IN SCHEDULE SHALL BE 0.120"Ø AND HAVE A MINIMUM 3/8" HEAD.
3. STAPLES SHALL BE GALVANIZED, HAVE 7/16" MINIMUM CROWN WIDTH AND BE INSTALLED PARALLEL TO FRAMING MEMBERS.
4. 6d NAILS MAY BE SUBSTITUTED WITH DRYWALL SCREWS OR NO.6 - 1 1/4" TYPE S OR W SCREWS.
5. PROVIDE EXTERIOR GYP BOARD WHERE SHEAR WALL IS AN EXTERIOR WALL.
6. BLOCK ALL PANEL EDGES WITH WOOD BLOCKING TO MATCH THE STUD WALL SIZE.
7. BLOCK ALL PANEL EDGES WITH WOOD BLOCKING 2" NOMINAL OR WIDER.
8. BLOCK ALL PANEL EDGES WITH WOOD BLOCKING 3" NOMINAL OR WIDER, STAGGER NAILS.
9. PROVIDE 1 1/2" MINIMUM PENETRATION INTO STUD AT 10d NAIL AND 1 3/8" AT 8d NAIL.
10. AT CONTRACTOR'S OPTION, USE 5/8"Ø SIMPSON TITEN HD SCREW ANCHORS WITH MINIMUM 3" EMBEDMENT WITH SAME SPACING. DO NOT DAMAGE REINFORCING WHEN DRILLING.

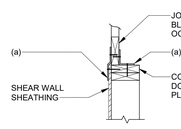

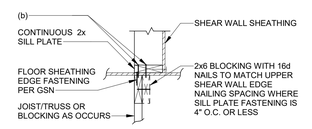

tsk
314 South Water Street,
Suite 100
Henderson, NV 89015
phone: 702.456.3000
fax: 702.898.6209
www.tska.com

THESE DRAWINGS AND SPECIFICATIONS ARE THE PROPERTY OF TATE SNYDER KIMSEY ARCHITECTS AND MAY NOT BE REPRODUCED OR USED FOR ANY PURPOSE WITHOUT THE ARCHITECTS WRITTEN CONSENT. AS INSTRUMENTS OF SERVICE, THESE DOCUMENTS ARE NOT FINAL AND READY FOR USE, AND THEREFORE NOT VALID, UNLESS THEY ARE SEALED, SIGNED AND DATED.

Consultant

Kimley»Horn

PLEASE RECYCLE

Project

WEST WENDOVER NEW FS #13

ANYWHERE BUT HERE

Job No: 092767002

Owner

CITY OF WEST WENDOVER

NOT FOR CONSTRUCTION

Project Status

REVISIONS		
REV	DATE	DESCRIPTION

Sheet Title

ABBREVIATIONS AND SCHEDULES

Date: Issue Date

Sheet No:

S1.03

BIM 360://WEST WENDOVER FIRE STATION/092767002 - WEST WENDOVER FS_STR_R21.rvt

NOTES:

1. COMPLY WITH SPECIFICATIONS AND STRUCTURAL GENERAL NOTES. UNLESS OTHERWISE SPECIFIED, THE FOLLOWING NOTES RELATING TO THE FOUNDATION PLAN SHALL GOVERN.
2. REFER TO PLUMBING, MECHANICAL, FIRE PROTECTION, CIVIL, AND ELECTRICAL PLANS FOR LOCATIONS AND SIZES OF OPENING THROUGH CIP CONCRETE, CMU WALLS AND ALL NECESSARY EMBEDDED ITEMS AS REQUIRED.
3. WALL CONSTRUCTION JOINTS SHALL BE LOCATED AT CONTROL JOINT LOCATIONS. SEE DETAILS ON S501.
4. ELEVATION 100'-0" (ARCHITECTURAL DATUM) = 4232.00'.
5. COLUMNS AND FOUNDATIONS SHALL BE CENTERED ON COLUMN GRID LINES (EG. COLUMNS, WALLS, ETC.) UNLESS NOTED OTHERWISE.
6. REFER TO PLUMBING, MECHANICAL, FIRE PROTECTION, CIVIL, ELECTRICAL PLANS AND STRUCTURAL DETAILS FOR LOCATIONS AND SIZES OF OPENINGS THROUGH CIP CONCRETE AND ALL REQUIRED EMBEDDED ITEMS.
7. WHERE SHOWN, BUT NOT SPECIFICALLY NOTED, PROVIDE STANDARD ACI-90 DEGREE OR 180 DEGREE HOOKS, AS APPLICABLE, TO REBAR.
8. PROVIDE CLASS B LAPS FOR ALL REBAR SPLICES RELATING TO FOUNDATION WORK UNLESS NOTED OTHERWISE. SEE LAP SPLICE SCHEDULE.
9. REFER TO CIVIL PLANS FOR PROPERTY LINES.
10. REFER TO CIVIL PLANS FOR SLAB-ON-GRADE TYPICAL DETAILS FOR SLAB-ON-GRADE OUTSIDE OF THE BUILDING FOOTPRINT. REFER TO CIVIL PLANS FOR SLAB-ON-GRADE ELEVATIONS AND GRADES.
11. CONTRACTOR SHALL AVOID CONFLICT WITH FOUNDATIONS OF NEARBY EXISTING AND PROPOSED STRUCTURES AND BURIED UTILITIES.
12. POSITIVE DRAINAGE SHALL BE PROVIDED AROUND THE PERIMETER OF THE PARKING STRUCTURE TO MINIMIZE MOISTURE INFILTRATION INTO THE FOUNDATION SOILS.

LEGEND:

1. (XXX'-X") — NUMBER IN PARENTHESIS DENOTES TOP OF FOOTING. TOF = 97'-0" UNO.
2. CAST-IN-PLACE CONCRETE PEDESTAL
3. CAST-IN-PLACE CONCRETE FOUNDATION WALL
4. DENOTES DRAINAGE SLOPE DIRECTIONS
5. DENOTES FOUNDATION STEP
7. **F3.0** — DENOTES CONCRETE SPREAD FOOTING, TYPE F3.0, REFER TO DETAIL 1/S5.01
8. **P1** — DENOTES CONCRETE PEDESTAL, TYPE 1, REFER TO DETAIL 5/S5.01
9. **SF1** — DENOTES STRIP FOOTING, TYPE SF1, REFER TO DETAIL 2/S5.01

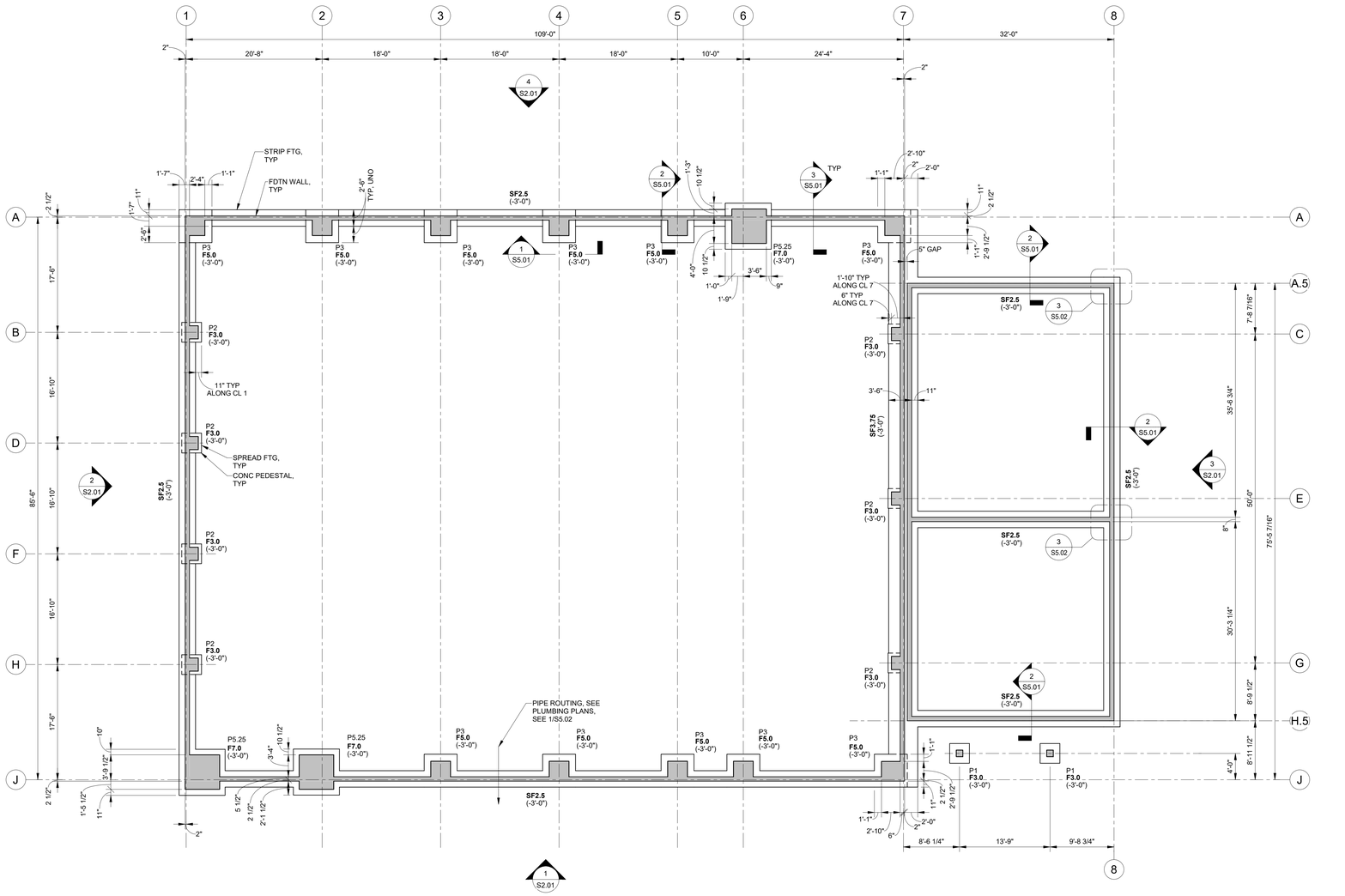

1 S1.10 FOUNDATION PLAN
SCALE: 1/8" = 1'-0"

tsk
314 South Water Street,
Suite 100
Henderson, NV 89015
phone: 702.456.3000
fax: 702.898.6209
www.tska.com

THESE DRAWINGS AND SPECIFICATIONS ARE THE PROPERTY OF TATE SNYDER KIMSEY ARCHITECTS AND MAY NOT BE REPRODUCED OR USED FOR ANY PURPOSE WITHOUT THE ARCHITECTS WRITTEN CONSENT. AS INSTRUMENTS OF SERVICE, THESE DOCUMENTS ARE NOT FINAL AND READY FOR USE, AND THEREFORE NOT VALID, UNLESS THEY ARE SEALED, SIGNED AND DATED.

Consultant

Kimley»Horn

PLEASE RECYCLE

Project
WEST WENDOVER NEW FS #13

ANYWHERE BUT HERE

Job No: 092767002

Owner
CITY OF WEST WENDOVER

NOT FOR CONSTRUCTION

Project Status

REVISIONS		
REV	DATE	DESCRIPTION

Sheet Title
FOUNDATION PLAN

Date: Issue Date

Sheet No:
S1.10

BIM 360://WEST WENDOVER FIRE STATION/092767002 - WEST WENDOVER FS_STR_R21.rvt

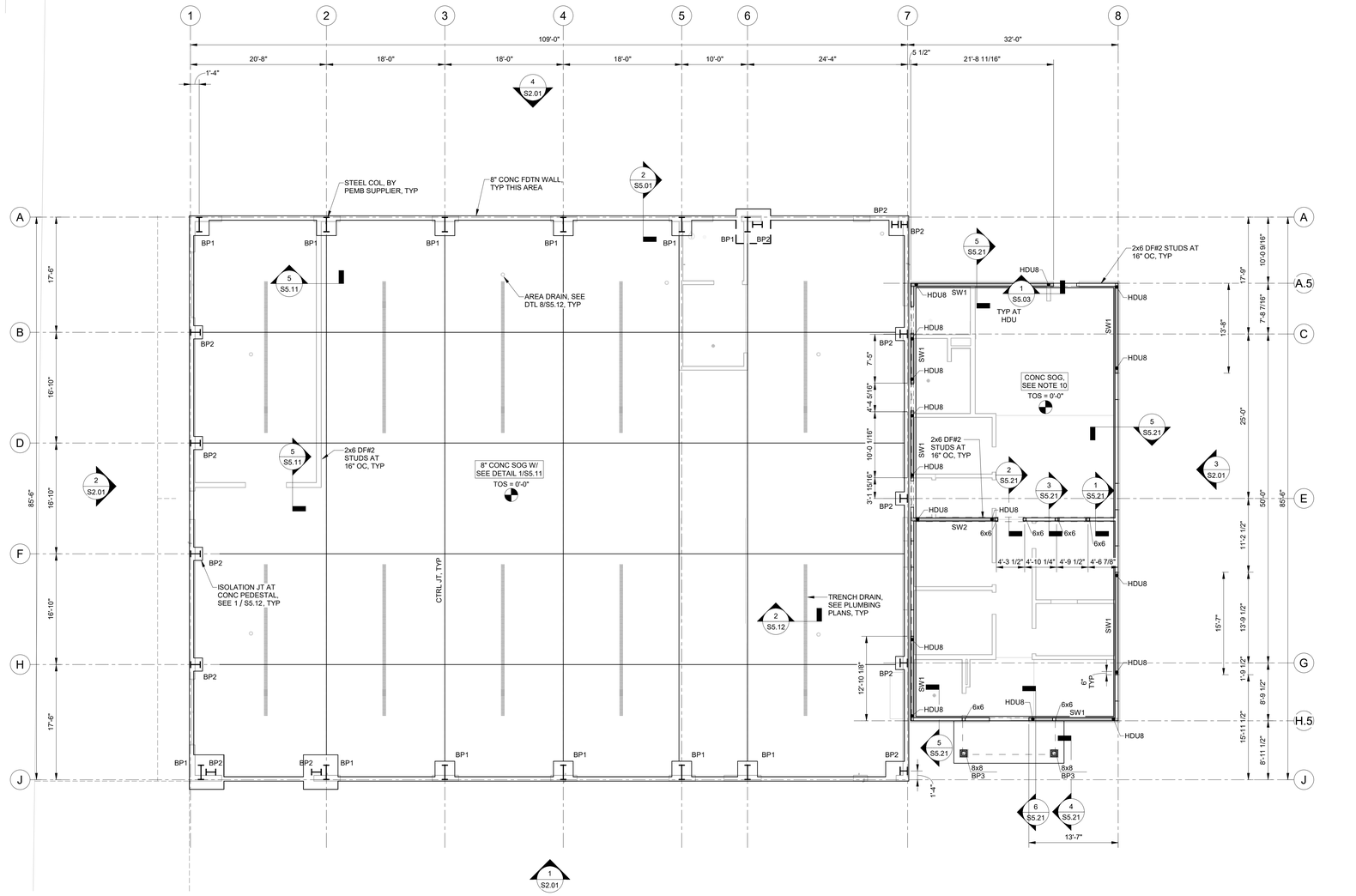

1 S1.11 SLAB-ON-GRADE PLAN

SCALE: 1/8" = 1'-0"

NOTES:

1. COMPLY WITH SPECIFICATIONS AND THE GENERAL NOTES ON SHEET S1.01 AND S1.02. UNLESS NOTED OTHERWISE, THE FOLLOWING NOTES RELATING TO THIS SHEET SHALL GOVERN.
2. ELEVATIONS NOTED THUS (XXX.XX') ARE TOP OF CONCRETE SLAB ON GRADE, TYPICAL. ELEVATIONS ARE INTENDED TO BE APPLIED AT FACE OF COLUMN OR WALL AT GRID LINES, UNLESS NOTED OTHERWISE, AND THE NOTED SLAB-ON-GRADE ELEVATION DOES NOT INCLUDE WASH OR CURB. USE LINEAR INTERPOLATION BETWEEN NOTED ELEVATIONS.
3. BOLLARDS NOT SHOWN ON STRUCTURAL PLANS. SEE ARCHITECTURAL AND STRIPING PLANS FOR BOLLARDS REQUIRED AROUND THE PERIMETER, NEAR THE ENTRY/EXIT LANES AND OTHER LOCATIONS WITHIN THE BUILDING. REFER TO SHEET S511 FOR BOLLARD ATTACHEMENT DETAILS.
4. CONSTRUCTION PROCEDURE FOR THE SLAB-ON-GRADE SHALL BE BASED ON LINE STRIP CONSTRUCTION METHOD. SLAB SHALL BE PLACED WITH CONSTRUCTION JOINTS AS SHOWN. ANY DEVIATIONS SHALL BE SUBJECT TO ENGINEERS APPROVAL. ALL CONTROL JOINTS SHALL BE SAWED IN ACCORDANCE WITH THE SPECIFIC LOCATIONS SHOWN.
5. CONCRETE CURBS AND RAISED ISLANDS ARE NOT SHOWN ON SLAB-ON-GRADE PLANS FOR CLARITY. REFER TO STRIPING AND SIGNING PLANS FOR LOCATIONS.
6. REFER TO PLUMBING PLANS FOR EXACT LOCATION OF FLOOR DRAINS.
7. CONTRACTOR SHALL NOTIFY ENGINEER IF DISCREPANCIES IN DRAINAGE INTENT ARE NOTICED.
8. REFER TO CIVIL, PLUMBING, MECHANICAL, FIRE PROTECTION, AND ELECTRICAL PLANS FOR LOCATIONS AND SIZES OF OPENINGS THROUGH CIP CONCRETE AND ALL NECESSARY EMBEDDED ITEMS AS REQUIRED.
9. REFER TO ARCH PLANS FOR FLOOR FLATNESS REQUIREMENTS IN CONDITIONED ROOMS.
10. 4" SLAB-ON-GRADE WITH 6x6 W2.9xW2.9 WWF OVER VAPOR BARRIER OVER STRUCTURAL FILL PER GEOTECHNICAL REPORT.
11. SEE SHEET S1.04 FOR ABBREVIATIONS AND SCHEDULES.

SHEARWALL NOTES:

1. ORIENTED STRAND BOARD (OSB) PANEL PER GSN MAY BE USED IN LIEU OF PLYWOOD. USE SAME THICKNESS AND NAILING AS NOTED FOR PLYWOOD PANELS. PANELS SHALL HAVE CURRENT I.C.C. APPROVAL.
2. SHEAR WALL OR SHEAR PANEL SHALL BE 2x AT 16" O.C. MAXIMUM.
3. DRAFTSTOPS OCCUR AT PARTY WALLS OF EVERY UNIT. MATERIAL SHALL BE 3/8" PLYWOOD OR DRYWALL AS PER SHEAR WALL SCHEDULE. FURR DOWNS SHALL BE DRAFTSTOPPED. ALL PENETRATIONS SHALL BE AS PER I.B.C.
4. SHEAR WALL SHEATHING SHALL BE CONTINUOUS TO BASE PLATE AT TUB LOCATIONS AND TO TOP PLATES AT FURRED DOWN CEILINGS.
5. PROVIDE DOUBLE BOTTOM PLATE, STAGGERED EDGE NAILING, AND SPLICE NAILING AT ALL TOP AND BOTTOM PLATES IN WALLS AND SHEAR PANELS WHERE 2- 2x BOTTOM PLATE IS REQUIRED.
6. SHEAR PANELS MAY BE SHEATHED ON THE EXTERIOR OR INTERIOR FACE OF EXTERIOR STUDS OR EITHER FACE OF INTERIOR STUDS AS REQUIRED FOR CONSTRUCTION EASE. COORDINATE WITH OTHER TRADES AS REQUIRED.
7. EDGE NAILING APPLIES TO ALL EDGES AND BOUNDARIES, FIELD NAILING APPLIES TO ALL INTERMEDIATE NAILING.
8. WHERE PANELS ARE APPLIED ON BOTH FACES OF A WALL AND NAIL SPACING IS LESS THAN 6 INCHES O.C. ON EITHER SIDE, PANEL JOINTS SHALL BE OFFSET TO FALL ON DIFFERENT FRAMING MEMBERS OR FRAMING SHALL BE 3 INCH NOMINAL OR THICKER AND NAILS ON EACH SIDE SHALL BE STAGGERED.
9. ANY SHEAR WALL MAY BE REPLACED WITH A SHEAR WALL HAVING A HIGHER ALLOWABLE SHEAR.
10. PROVIDE THE SAME THICKNESS PLYWOOD STRIPS FOR THE ENTIRE LENGTH OF WALL, ABOVE AND BELOW OPENINGS, FOR FLUSH FINISH.
11. PANEL SHEATHING SHALL NOT BE LESS THAN 4'x8', EXCEPT AT BOUNDARIES AND CHANGES IN FRAMING. ALL EDGES OF PANELS SHALL BE SUPPORTED BY AND FASTENED TO FRAMING MEMBERS OR BLOCKING. LOCATE NAILS A MINIMUM OF 3/8" FROM PANEL EDGES.
12. WHERE TIMBERSTRAND BLOCKING OCCURS, USE LSL 1 1/4" WIDE MEMBERS TYPICAL. WHERE BOTTOM PLATE CONNECTION SPACING IS 3" OR LESS, USE 1 3/4" WIDE MEMBERS MINIMUM.

LEGEND:

1. (XXX'-XX") DENOTES TOP OF SLAB ELEVATION (XXX'-XX"), SEE NOTE 1
2. CAST-IN-PLACE CONCRETE COLUMN
3. CAST-IN-PLACE CONCRETE WALL
4. FLOOR DRAIN, REFER TO MEP AND ARCH, REINF PER DETAIL 8/S5.12
5. DENOTES DRAINAGE SLOPE DIRECTIONS
6. BP1 DENOTES BASE PLATE, TYPE BP1. REFER TO DETAIL 1/S5.04
7. SW1 DENOTES SHEAR WALL, TYPE SW1.

tsk
314 South Water Street,
Suite 100
Henderson, NV 89015
phone: 702.456.3000
fax: 702.898.6209
www.tska.com

THESE DRAWINGS AND SPECIFICATIONS ARE THE PROPERTY OF TATE SNYDER KIMSEY ARCHITECTS AND MAY NOT BE REPRODUCED OR USED FOR ANY PURPOSE WITHOUT THE ARCHITECTS WRITTEN CONSENT. AS INSTRUMENTS OF SERVICE, THESE DOCUMENTS ARE NOT FINAL AND READY FOR USE, AND THEREFORE NOT VALID, UNLESS THEY ARE SEALED, SIGNED AND DATED.

Consultant

Kimley»Horn

PLEASE RECYCLE

Project

WEST WENDOVER NEW FS #13

ANYWHERE BUT HERE

Job No: 092767002

Owner

CITY OF WEST WENDOVER

NOT FOR CONSTRUCTION

Project Status

REVISIONS		
REV	DATE	DESCRIPTION

Sheet Title

SLAB-ON-GRADE PLAN

Date: Issue Date

Sheet No:

S1.11

BIM 360://WEST WENDOVER FIRE STATION/092767002 - WEST WENDOVER FS_STR_R21.rvt

NOTES:

1. STRUCTURAL REFERENCE ELEVATIONS ( ) = 0'-0" WHICH IS THE TOP OF FINISHED SLAB ELEVATION FOR LEVEL 1. VERIFY WITH CIVIL DRAWINGS. ALL ELEVATIONS NOTED ON PLANS ARE WITH RESPECT TO REFERENCE DATUM ELEVATIONS INFORMATION UNLESS NOTED OTHERWISE. THE CONTRACTOR SHALL VISIT THE SITE AND BECOME FAMILIAR WITH THE SITE AND LOCAL CONDITIONS.
2. THE ARCHITECT FURNISHES ALL ELEVATIONS AND DIMENSIONS. RESOLVE ANY DISCREPANCY WITH ARCHITECT. NOTIFY EOR THROUGH ARCHITECT OF ANY VARIATIONS FROM DIMENSIONS AND CONDITIONS SHOWN BY THIS DRAWING.
3. ALL OPENINGS THROUGH FLOORS, WALLS OR ROOFS ARE NOT SHOWN ON PLANS. COORDINATE ALL OPENING LOCATIONS WITH ARCHITECTURAL, MECHANICAL, AND ELECTRICAL DRAWINGS. COORDINATE ADDITIONAL FRAMING REQUIREMENTS OR REINFORCING WITH TYPICAL DETAILS.
4. SEE SHEET S1.01 THRU S1.03 FOR GENERAL STRUCTURAL NOTES AND SPECIAL INSPECTION REQUIREMENTS.
5. SEE SHEET S1.04 FOR ABBREVIATIONS AND SCHEDULES.
6. REFER TO SHEETS S_ THRU S_ FOR TYPICAL DETAILS. TYPICAL DETAILS APPLY TO SITUATIONS OCCURING ON THE PROJECT THAT ARE THE SAME OR SIMILAR TO THOSE SPECIFICALLY REFERENCED. TYPICAL DETAILS ARE NOT NOTED AT EACH LOCATION WHICH THEY ARE APPLICABLE.
7. SEE SHEET S1.04 FOR TYPICAL HEADER SCHEDULE. CONTRACTOR SHALL COORDINATE WITH OTHER TRADES FOR EXACT SIZE AND LOCATION REQUIREMENTS.

LEGEND:

1. DENOTES ROOF SLOPE

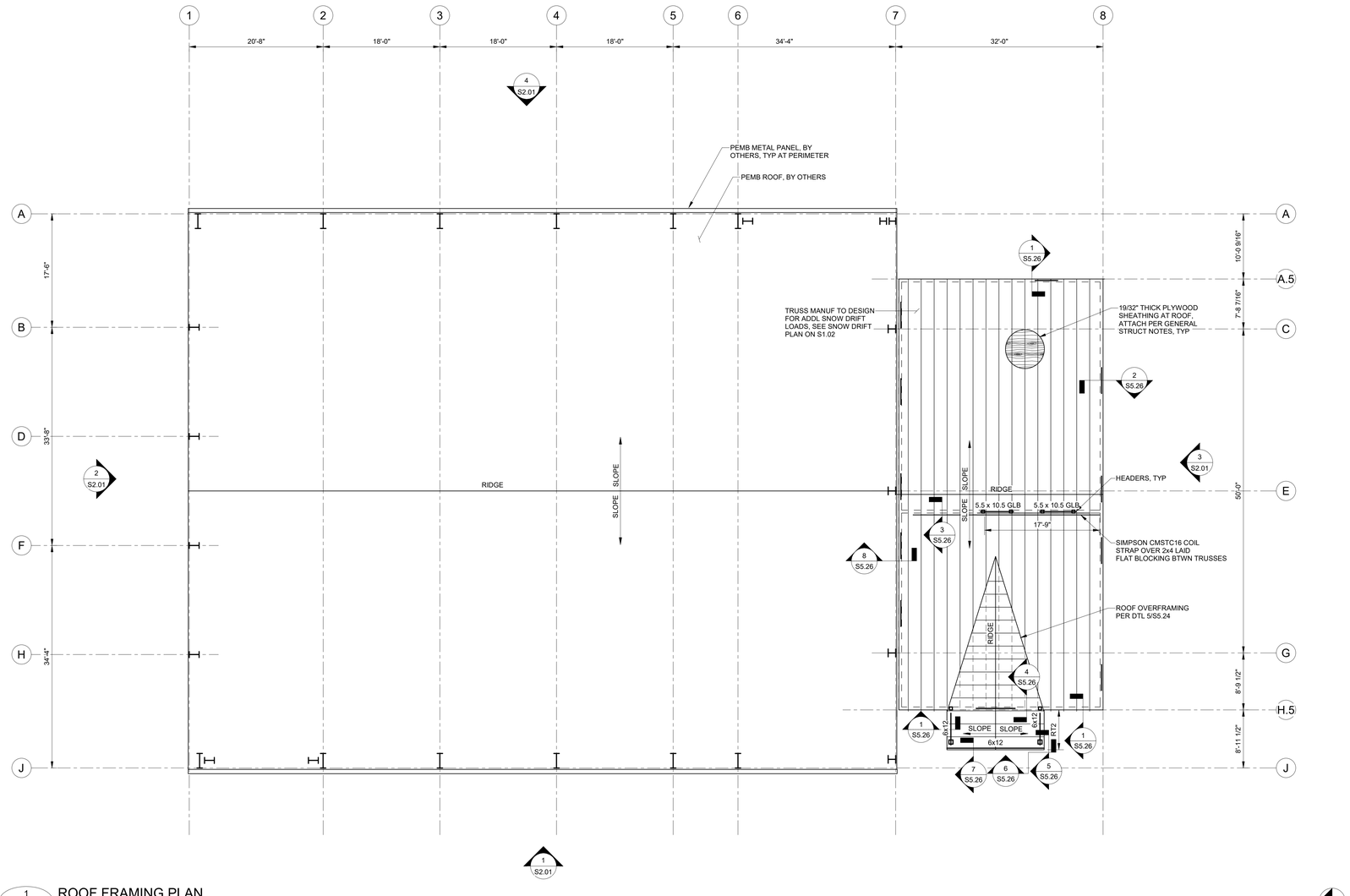

1 S1.20 ROOF FRAMING PLAN
SCALE: 1/8" = 1'-0"

tsk
314 South Water Street,
Suite 100
Henderson, NV 89015
phone: 702.456.3000
fax: 702.898.6209
www.tska.com

THESE DRAWINGS AND SPECIFICATIONS ARE THE PROPERTY OF TATE SNYDER KIMSEY ARCHITECTS AND MAY NOT BE REPRODUCED OR USED FOR ANY PURPOSE WITHOUT THE ARCHITECTS WRITTEN CONSENT. AS INSTRUMENTS OF SERVICE, THESE DOCUMENTS ARE NOT FINAL AND READY FOR USE, AND THEREFORE NOT VALID, UNLESS THEY ARE SEALED, SIGNED AND DATED.

Consultant

Kimley»Horn

PLEASE RECYCLE

Project
WEST WENDOVER NEW FS #13

ANYWHERE BUT HERE

Job No: 092767002

Owner
CITY OF WEST WENDOVER

NOT FOR CONSTRUCTION

Project Status

REVISIONS		
REV	DATE	DESCRIPTION

Sheet Title
ROOF FRAMING PLAN

Date: Issue Date
Sheet No:
S1.20

BIM 360://WEST WENDOVER FIRE STATION/092767002 - WEST WENDOVER FS_STR_R21.rvt

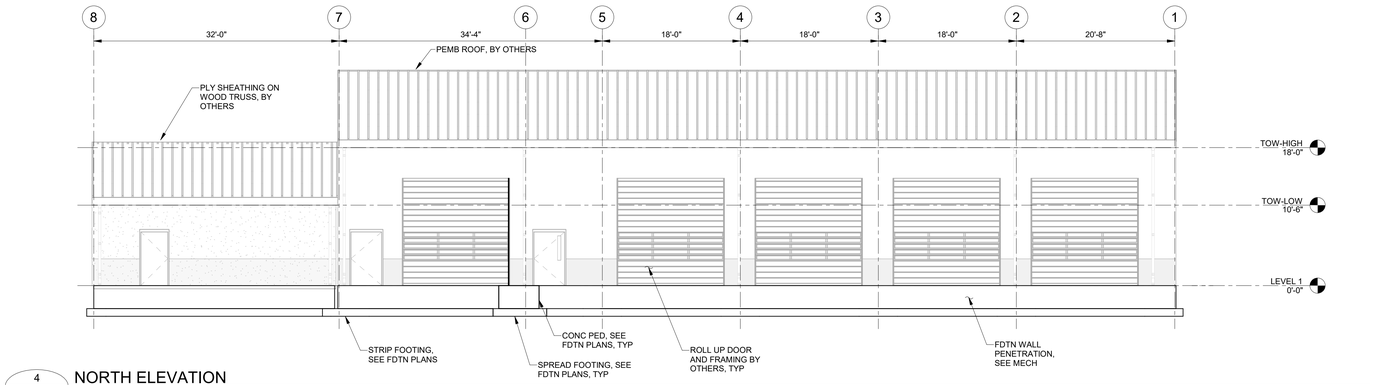

4 S2.01 NORTH ELEVATION

SCALE: 1/8" = 1'-0"

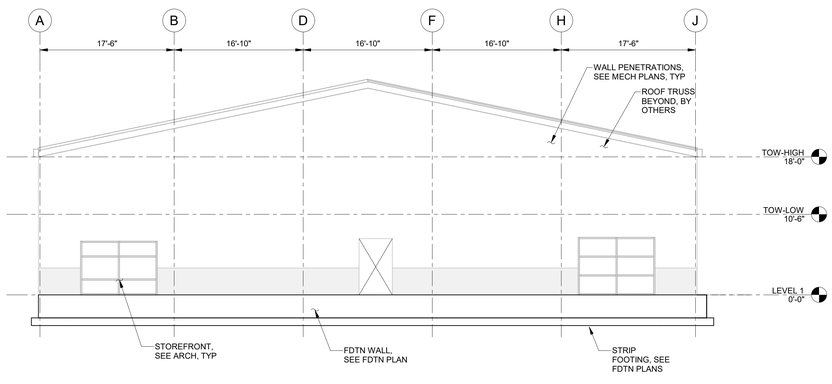

2 S2.01 WEST ELEVATION

SCALE: 1/8" = 1'-0"

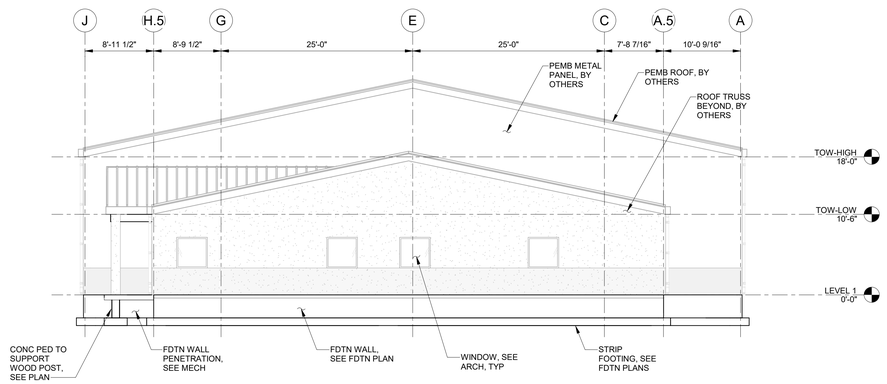

3 S2.01 EAST ELEVATION

SCALE: 1/8" = 1'-0"

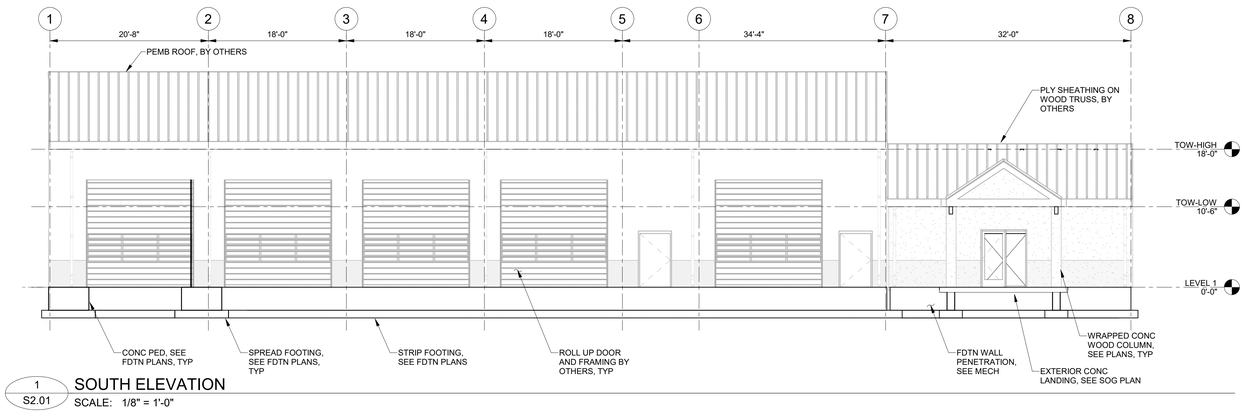

1 S2.01 SOUTH ELEVATION

SCALE: 1/8" = 1'-0"

BIM 360://WEST WENDOVER FIRE STATION/092767002 - WEST WENDOVER FS_STR_R21.rvt

tsk
314 South Water Street,
Suite 100
Henderson, NV 89015
phone: 702.456.3000
fax: 702.898.6209
www.tska.com

THESE DRAWINGS AND SPECIFICATIONS ARE THE PROPERTY OF TATE SNYDER KIMSEY ARCHITECTS AND MAY NOT BE REPRODUCED OR USED FOR ANY PURPOSE WITHOUT THE ARCHITECTS WRITTEN CONSENT. AS INSTRUMENTS OF SERVICE, THESE DOCUMENTS ARE NOT FINAL AND READY FOR USE, AND THEREFORE NOT VALID, UNLESS THEY ARE SEALED, SIGNED AND DATED.

Consultant

Kimley»Horn

PLEASE RECYCLE

Project

WEST WENDOVER NEW FS #13

ANYWHERE BUT HERE

Job No: 092767002

Owner

CITY OF WEST WENDOVER

NOT FOR CONSTRUCTION

Project Status

REVISIONS		
REV	DATE	DESCRIPTION

Sheet Title

ELEVATIONS

Date: Issue Date

Sheet No:

S2.01

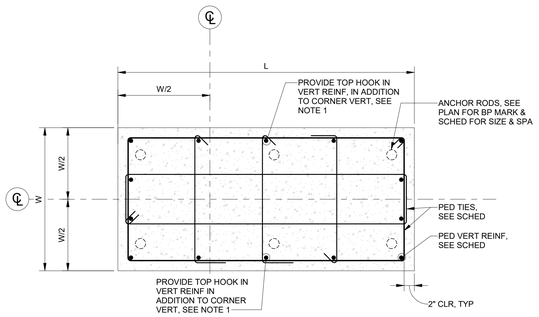

ELONGATED PEDESTAL AT BRACED FRAME GUSSET CONNECTIONS

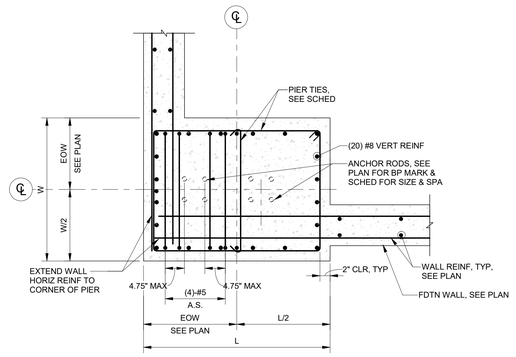

PEDESTAL P5.25

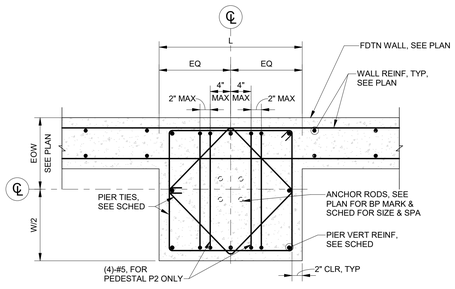

PEDESTAL P2 AND P3

6 S5.01 CONCRETE PEDESTAL DETAILS

SCALE: 1" = 1'-0"

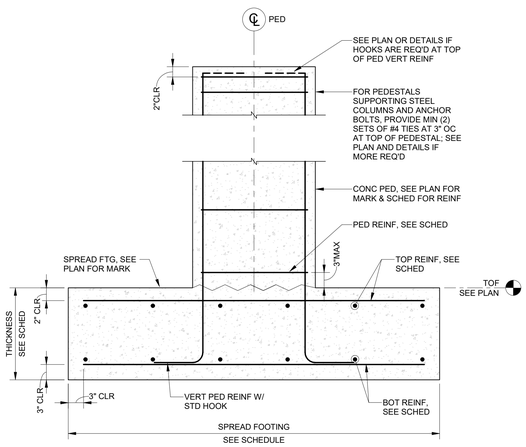

1 S5.01 CONCRETE PEDESTAL ON SPREAD FOOTING

SCALE: 1" = 1'-0"

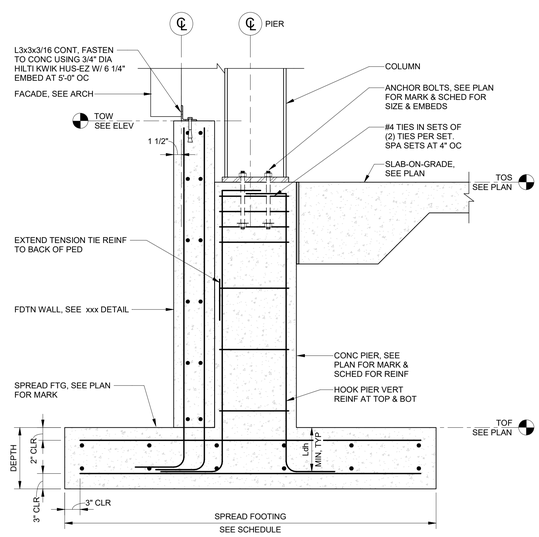

2 S5.01 SECTION THROUGH FOUNDATION AT FRAME COLUMN

SCALE: 1" = 1'-0"

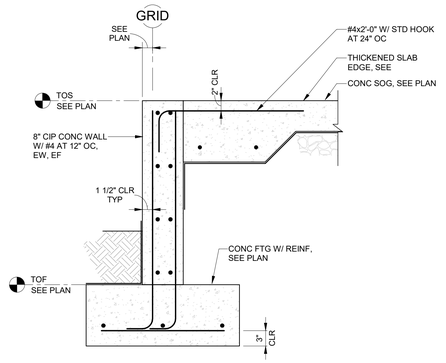

3 S5.01 FOUNDATION WALL DETAIL AT DOOR OPENING

SCALE: 1" = 1'-0"

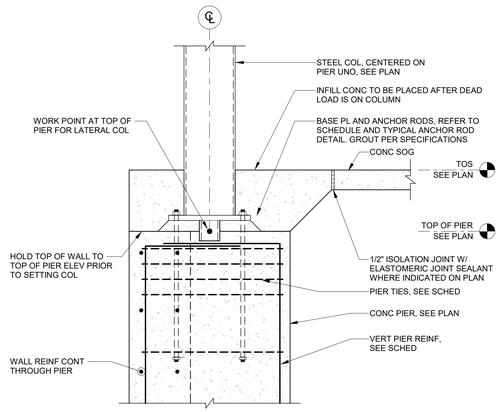

5 S5.01 WALL DETAIL AT COLUMN ON PIER WITH STEM WALL

SCALE: 1" = 1'-0"

tsk
314 South Water Street,
Suite 100
Henderson, NV 89015
phone: 702.456.3000
fax: 702.898.6209
www.tska.com

THESE DRAWINGS AND SPECIFICATIONS ARE THE PROPERTY OF TATE SNYDER KIMSEY ARCHITECTS AND MAY NOT BE REPRODUCED OR USED FOR ANY PURPOSE WITHOUT THE ARCHITECTS WRITTEN CONSENT. AS INSTRUMENTS OF SERVICE, THESE DOCUMENTS ARE NOT FINAL AND READY FOR USE, AND THEREFORE NOT VALID, UNLESS THEY ARE SEALED, SIGNED AND DATED.

Consultant

Kimley»Horn

PLEASE RECYCLE

Project

WEST WENDOVER NEW FS #13

ANYWHERE BUT HERE

Job No: 092767002

Owner

CITY OF WEST WENDOVER

NOT FOR CONSTRUCTION

Project Status

REVISIONS		
REV	DATE	DESCRIPTION

Sheet Title

FOUNDATION DETAILS

Date: Issue Date

Sheet No:

S5.01

BIM 360://WEST WENDOVER FIRE STATION/092767002 - WEST WENDOVER FS_STR_R21.rvt

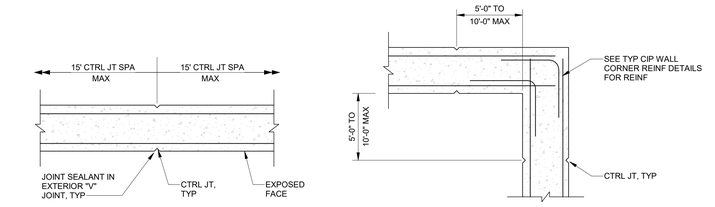

WALL LENGTH PLAN

WALL CORNER PLAN

NOTES:
1. ADDITIONAL CONTROL JOINTS MUST BE PROVIDED AT EACH FOOTING STEP.
2. WALL CONSTRUCTION JOINTS MUST BE LOCATED AT CONTROL JOINT LOCATIONS.
3. CUT EVERY OTHER HORIZONTAL BAR AT CONTROL JOINT LOCATIONS EXCEPT TOP AND BOTTOM BARS. PROVIDE A "V" JOINT ON ONE SIDE OF THE WALL (NON-FORMLINER SIDE) AT EACH CONTROL JOINT LOCATION.

4 S5.02 TYPICAL WALL CONTROL JOINT DETAIL

NTS

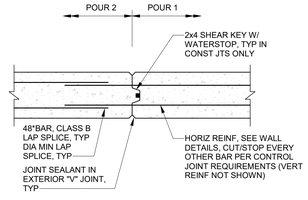

5 S5.02 TYPICAL WALL CONSTRUCTION JOINT DETAIL

NTS

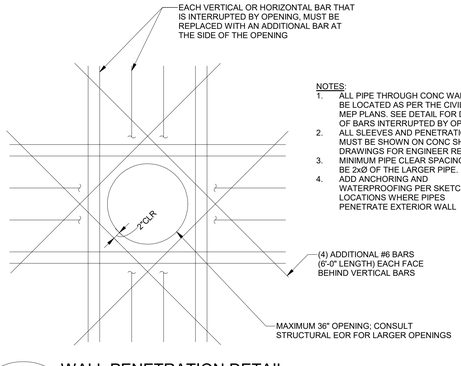

NOTES:
1. ALL PIPE THROUGH CONC WALL MUST BE LOCATED AS PER THE CIVIL OR MEP PLANS. SEE DETAIL FOR DETAILS OF BARS INTERRUPTED BY OPENING.
2. ALL SLEEVES AND PENETRATIONS MUST BE SHOWN ON CONC SHOP DRAWINGS FOR ENGINEER REVIEW.
3. MINIMUM PIPE CLEAR SPACING MUST BE 2xØ OF THE LARGER PIPE.
4. ADD ANCHORING AND WATERPROOFING PER SKETCH AT LOCATIONS WHERE PIPES PENETRATE EXTERIOR WALL

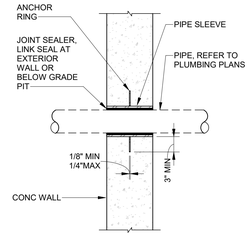

ANCHOR RING

1 S5.02 WALL PENETRATION DETAIL

NTS

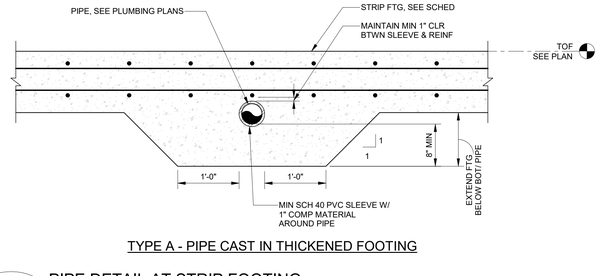

TYPE A - PIPE CAST IN THICKENED FOOTING

2 S5.02 PIPE DETAIL AT STRIP FOOTING

NTS

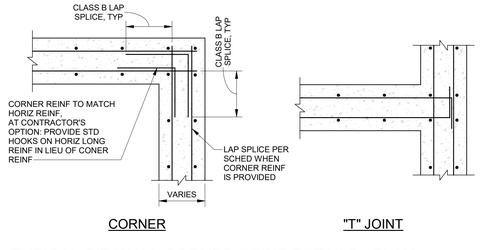

CORNER "T" JOINT

3 S5.02 TYPICAL CIP WALL CORNER REINF DETAILS - PLAN

NTS

tsk

314 South Water Street,
Suite 100
Henderson, NV 89015
phone: 702.456.3000
fax: 702.898.6209
www.tska.com

THESE DRAWINGS AND SPECIFICATIONS ARE THE PROPERTY OF TATE SNYDER KIMSEY ARCHITECTS AND MAY NOT BE REPRODUCED OR USED FOR ANY PURPOSE WITHOUT THE ARCHITECTS WRITTEN CONSENT. AS INSTRUMENTS OF SERVICE, THESE DOCUMENTS ARE NOT FINAL AND READY FOR USE, AND THEREFORE NOT VALID, UNLESS THEY ARE SEALED, SIGNED AND DATED.

Consultant

Kimley»Horn

PLEASE RECYCLE

Project

WEST WENDOVER NEW FS #13

ANYWHERE BUT HERE

Job No: 092767002

Owner

CITY OF WEST WENDOVER

NOT FOR CONSTRUCTION

Project Status

REVISIONS		
REV	DATE	DESCRIPTION

Sheet Title

FOUNDATION DETAILS

Date: Issue Date

Sheet No:

S5.02

BIM 360://WEST WENDOVER FIRE STATION/092767002 - WEST WENDOVER FS_STR_R21.rvt

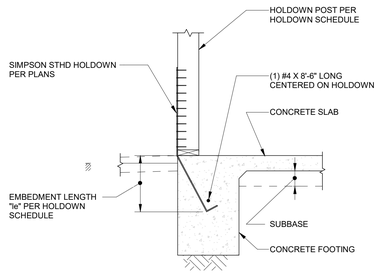

3 S5.03 TYPICAL DETAIL - STHD HOLDOWN ANCHOR AT CONCRETE FOOTING

NTS

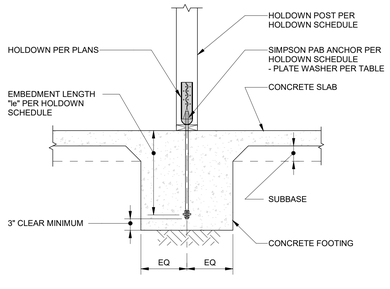

ANCHOR AT INTERIOR CONCRETE FOOTING

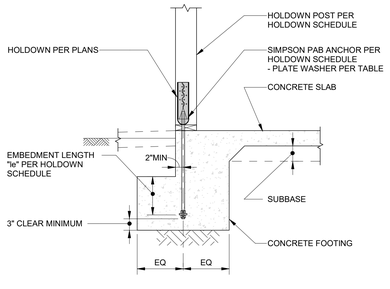

ANCHOR AT EXTERIOR CONCRETE FOOTING

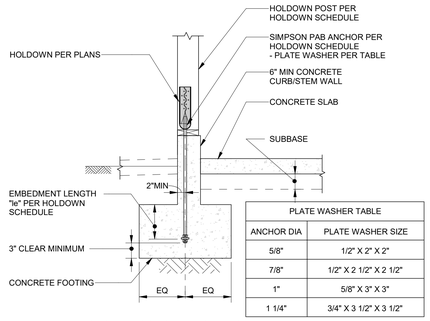

PLATE WASHER TABLE	
ANCHOR DIA	PLATE WASHER SIZE
5/8"	1/2" X 2" X 2"
7/8"	1/2" X 2 1/2" X 2 1/2"
1"	5/8" X 3" X 3"
1 1/4"	3/4" X 3 1/2" X 3 1/2"

ANCHOR AT CONCRETE CURB/STEM WALL

1 S5.03 TYPICAL DETAIL - PAB HOLDOWN ANCHOR AT CONCRETE FOOTING

NTS

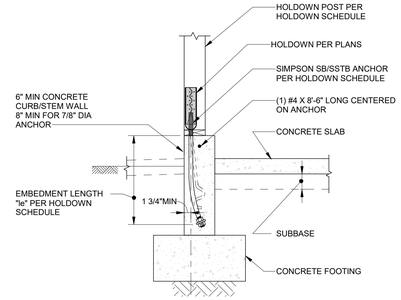

ANCHOR AT STEM WALL

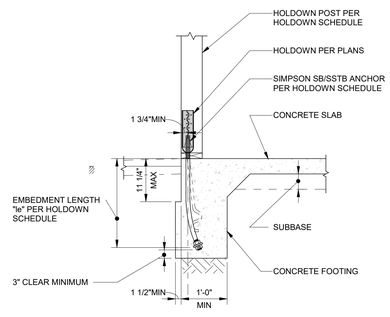

ANCHOR AT CONCRETE FOOTING

2 S5.03 TYPICAL DETAIL - SB AND SSTB HOLDOWN ANCHOR

NTS

tsk
314 South Water Street,
Suite 100
Henderson, NV 89015
phone: 702.456.3000
fax: 702.898.6209
www.tska.com

THESE DRAWINGS AND SPECIFICATIONS ARE THE PROPERTY OF TATE SNYDER KIMSEY ARCHITECTS AND MAY NOT BE REPRODUCED OR USED FOR ANY PURPOSE WITHOUT THE ARCHITECTS WRITTEN CONSENT. AS INSTRUMENTS OF SERVICE, THESE DOCUMENTS ARE NOT FINAL AND READY FOR USE, AND THEREFORE NOT VALID, UNLESS THEY ARE SEALED, SIGNED AND DATED.

Consultant

Kimley»Horn

PLEASE RECYCLE

Project

WEST WENDOVER NEW FS #13

ANYWHERE BUT HERE

Job No: 092767002

Owner

CITY OF WEST WENDOVER

NOT FOR CONSTRUCTION

Project Status

REVISIONS		
REV	DATE	DESCRIPTION

Sheet Title

FOUNDATION DETAILS

Date: Issue Date

Sheet No:

S5.03

BIM 360://WEST WENDOVER FIRE STATION/092767002 - WEST WENDOVER FS_STR_R21.rvt

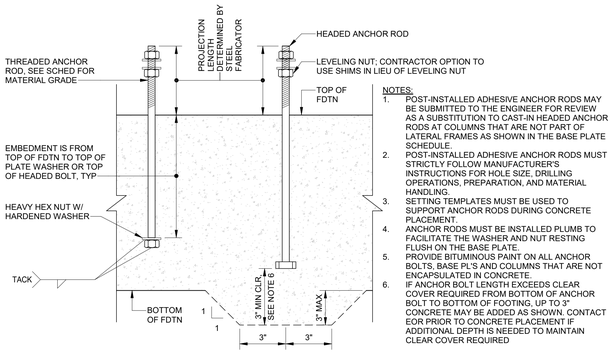

NOTES:

1. POST-INSTALLED ADHESIVE ANCHOR RODS MAY BE SUBMITTED TO THE ENGINEER FOR REVIEW AS A SUBSTITUTION TO CAST-IN HEADED ANCHOR RODS AT COLUMNS THAT ARE NOT PART OF LATERAL FRAMES AS SHOWN IN THE BASE PLATE SCHEDULE.
2. POST-INSTALLED ADHESIVE ANCHOR RODS MUST STRICTLY FOLLOW MANUFACTURER'S INSTRUCTIONS FOR HOLE SIZE, DRILLING OPERATIONS, PREPARATION, AND MATERIAL HANDLING.
3. SETTING TEMPLATES MUST BE USED TO SUPPORT ANCHOR RODS DURING CONCRETE PLACEMENT.
4. ANCHOR RODS MUST BE INSTALLED PLUMB TO FACILITATE THE WASHER AND NUT RESTING FLUSH ON THE BASE PLATE.
5. PROVIDE BITUMINOUS PAINT ON ALL ANCHOR BOLTS, BASE PL'S AND COLUMNS THAT ARE NOT ENCAPSULATED IN CONCRETE.
6. IF ANCHOR BOLT LENGTH EXCEEDS CLEAR COVER REQUIRED FROM BOTTOM OF ANCHOR BOLT TO BOTTOM OF FOOTING, UP TO 3" CONCRETE MAY BE ADDED AS SHOWN. CONTACT EOR PRIOR TO CONCRETE PLACEMENT IF ADDITIONAL DEPTH IS NEEDED TO MAINTAIN CLEAR COVER REQUIRED

2 S5.04 TYPICAL ANCHOR ROD DETAIL

NTS

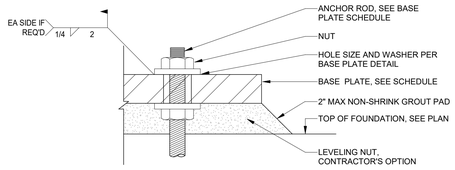

3 S5.04 TYPICAL BASE PLATE SECTION

NTS

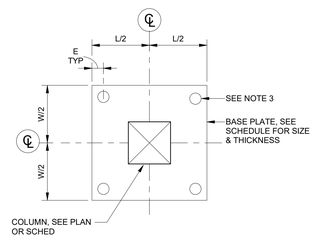

WOOD COLUMN

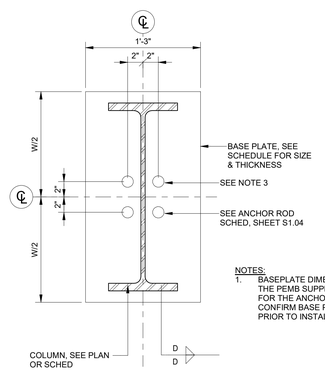

WIDE FLANGE COLUMN

NOTES:

1. BASEPLATE DIMENSIONS AND EDGE DISTANCES WERE PROVIDED BY THE PEMB SUPPLIER AND ARE NOTED AS THE THE BASIS OF DESIGN FOR THE ANCHOR SIZE AND EMBEDMENT DEPTH, CONTRACTOR TO CONFIRM BASE PLATE SIZE AND LAYOUT WITH THE PEMB SUPPLIER PRIOR TO INSTALLING ANCHORS.

AISC RECOMMENDED SIZES FOR ANCHOR-ROD HOLES IN BASE PLATES			
ANCHOR ROD DIAMETER	MAXIMUM HOLE DIAMETER, [1]	MINIMUM WASHER SIZE, [2,3]	MINIMUM WASHER THICKNESS
3/4"	1 5/16"	2"	1/4"
7/8"	1 9/16"	2 1/2"	5/16"
1"	1 13/16"	3"	3/8"
1 1/4"	2 1/16"	3"	1/2"
1 1/2"	2 5/16"	3 1/2"	1/2"
1 3/4"	2 3/4"	4"	5/8"
2"	3 1/4"	5"	3/4"
2 1/2"	3 3/4"	5 1/2"	7/8"

NOTES:

1. CIRCULAR OR SQUARE WASHERS MEETING THE WASHER SIZE ARE ACCEPTABLE.
2. IF PLATE WASHER CONFLICTS WITH COLUMN, CONTRACTOR MUST NOTIFY STRUCTURAL EOR PRIOR TO STEEL FABRICATION.
3. FOR BASE PLATES AT GRAVITY COLUMNS, WHEN BASE PLATES ARE LESS THAN 1 1/4" THICK, 1 1/16" DIA HOLES MAY BE USED FOR 3/4" DIA ANCHOR RODS WITH STANDARD WASHERS IN PLACE OF FABRICATED PLATE WASHERS.

1 S5.04 TYPICAL BASE PLATE DETAILS

NTS

BIM 360://WEST WENDOVER FIRE STATION/092767002 - WEST WENDOVER FS_STR_R21.rvt

tsk

314 South Water Street,
Suite 100
Henderson, NV 89015
phone: 702.456.3000
fax: 702.898.6209
www.tska.com

THESE DRAWINGS AND SPECIFICATIONS ARE THE PROPERTY OF TATE SNYDER KIMSEY ARCHITECTS AND MAY NOT BE REPRODUCED OR USED FOR ANY PURPOSE WITHOUT THE ARCHITECTS WRITTEN CONSENT. AS INSTRUMENTS OF SERVICE, THESE DOCUMENTS ARE NOT FINAL AND READY FOR USE, AND THEREFORE NOT VALID, UNLESS THEY ARE SEALED, SIGNED AND DATED.

Consultant

Kimley»Horn

PLEASE RECYCLE

Project

WEST WENDOVER NEW FS #13

ANYWHERE BUT HERE

Job No: 092767002

Owner

CITY OF WEST WENDOVER

NOT FOR CONSTRUCTION

Project Status

REVISIONS		
REV	DATE	DESCRIPTION

Sheet Title

FOUNDATION DETAILS

Date: Issue Date

Sheet No:

S5.04

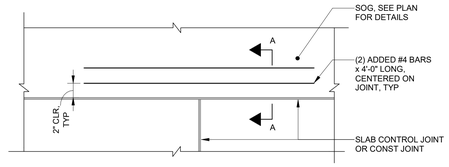

DISCONTINUOUS JOINT

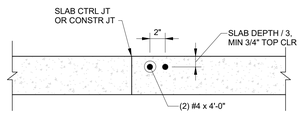

SECTION A - A

RE-ENTRANT CORNER

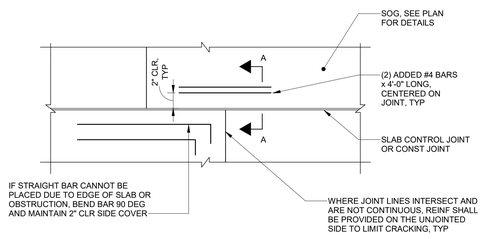

OFFSET JOINT

SUPPORTED ELEMENT	WIDTH
EQUIPMENT	8" BEYOND EQUIP FOOTPRINT
INTERIOR NON-LOAD BEARING WOOD WALL	2'-0" CENTERED ON WALL

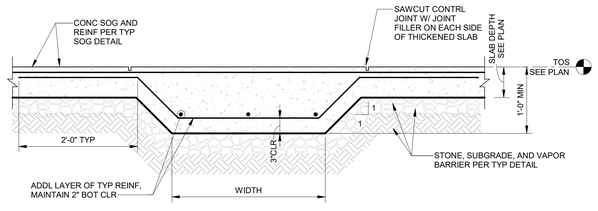

5 S5.11 THICKENED SLAB-ON-GRADE DETAIL
NTS

6 S5.11 ADDED REINF AT CONTROL JOINT OFFSETS AND RE-ENTRANT CORNERS
NTS

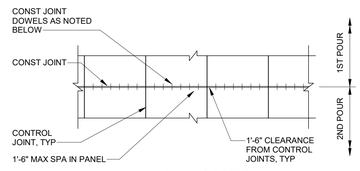

PLAN SECTION

DEPTH	REINFORCEMENT	TOP CLR	ALLOW . UNIFORM LOAD
4"	6x6-W2.1xW2.1 WWF	2"	100 PSF
8"	#4 AT 12" OC EW	2 1/2"	250 PCF

*BASED ON SUBGRADE MODULUS OF 200 PCI

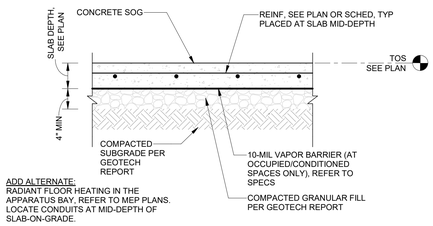

ADD ALTERNATE:
RADIANT FLOOR HEATING IN THE APPARATUS BAY, REFER TO MEP PLANS. LOCATE CONDUITS AT MID-DEPTH OF SLAB-ON-GRADE.

1 S5.11 TYPICAL SLAB-ON-GRADE
NTS

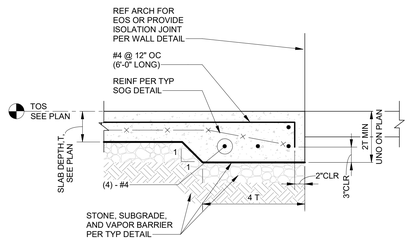

2 S5.11 TYPICAL SLAB-ON-GRADE EDGE
NTS

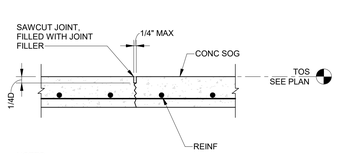

NOTES:
1. SAWCUT JOINT IMMEDIATELY AFTER INITIAL SET, BEFORE CONCRETE BEGINS TO COOL, AS SOON AS CONCRETE SURFACE IS FIRM ENOUGH TO NOT BE DAMAGED BY BLADE AND BEFORE RANDOM SHRINKAGE CRACKING OCCURS.

3 S5.11 TYPICAL SLAB-ON-GRADE JOINT - CTRL JT
NTS

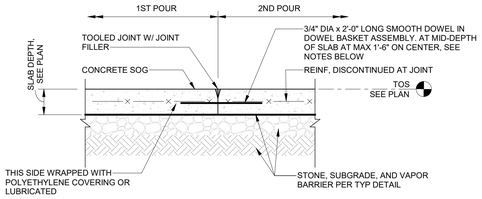

NOTES:
1. PAINT FACE OF JOINT WITH BOND BREAKING COMPOUND PRIOR TO 2ND POUR.
2. DO NOT PLACE DOWELS WITHIN 1'-6" OF SLAB PANEL CORNERS TO ALLOW CONTROL JOINTS TO ACTIVATE. MAX SPACING OF 3'-0" ACROSS CONTROL JOINTS.

4 S5.11 TYPICAL CONSTRUCTION JOINT
NTS

BIM 360://WEST WENDOVER FIRE STATION/092767002 - WEST WENDOVER FS_STR_R21.rvt

tsk
314 South Water Street,
Suite 100
Henderson, NV 89015
phone: 702.456.3000
fax: 702.898.6209
www.tska.com

THESE DRAWINGS AND SPECIFICATIONS ARE THE PROPERTY OF TATE SNYDER KIMSEY ARCHITECTS AND MAY NOT BE REPRODUCED OR USED FOR ANY PURPOSE WITHOUT THE ARCHITECTS WRITTEN CONSENT. AS INSTRUMENTS OF SERVICE, THESE DOCUMENTS ARE NOT FINAL AND READY FOR USE, AND THEREFORE NOT VALID, UNLESS THEY ARE SEALED, SIGNED AND DATED.

Consultant

Kimley»Horn

PLEASE RECYCLE

Project
WEST WENDOVER NEW FS #13

ANYWHERE BUT HERE

Job No: 092767002

Owner
CITY OF WEST WENDOVER

NOT FOR CONSTRUCTION

Project Status

REVISIONS		
REV	DATE	DESCRIPTION

Sheet Title
SLAB-ON-GRADE DETAILS

Date: Issue Date
Sheet No:
S5.11

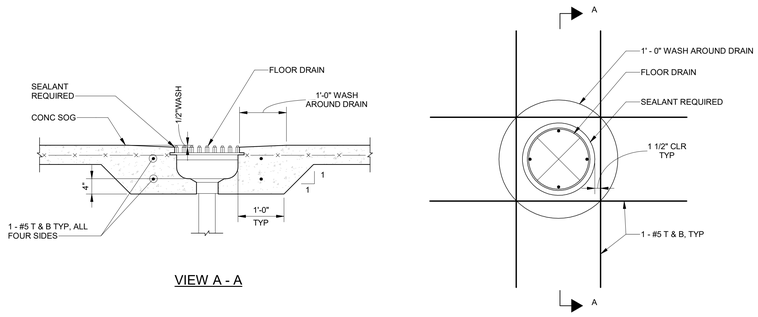

VIEW A - A

8 S5.12 FLOOR DRAIN DETAIL
NTS

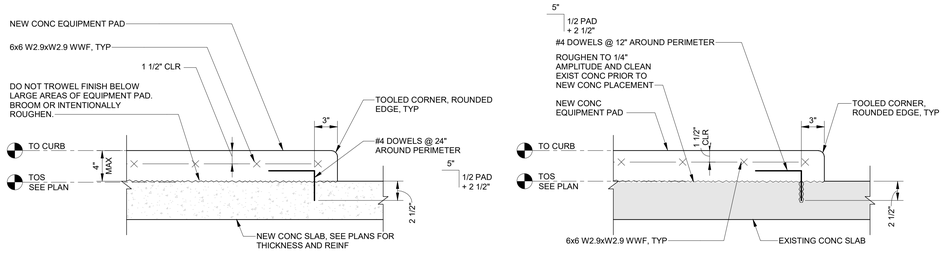

PAD ON NEW CONC SLAB

PAD ON EXISTING CONC SLAB

NOTES:
1. PADS ON SLAB-ON-GRADE MAY BE NORMAL-WT CONC. PADS ON ELEVATED SLABS MUST BE LIGHT-WT CONC UNLESS APPROVED BY ENGINEER.
2. PROVIDE BONDING AGENT ON CONC PRIOR TO NEW CONC PLACEMENT.
3. PAD EXTENTS MUST BE MIN 4" BEYOND FOOTPRINT OF SUPPORTED EQUIPMENT. EQUIPMENT SIZES MUST BE COORDINATED WITH MEP TRADES.
4. EQUIPMENT PROVIDER MUST BE RESPONSIBLE FOR DESIGNING AND SUPPLYING ANCHORS FOR EQUIPMENT ATTACHMENT.

6 S5.12 EQUIPMENT PAD DETAIL
NTS

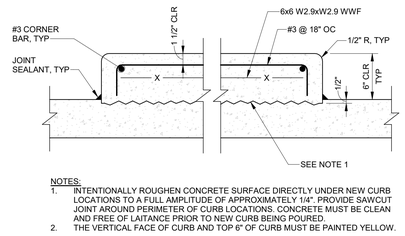

NOTES:
1. INTENTIONALLY ROUGHEN CONCRETE SURFACE DIRECTLY UNDER NEW CURB LOCATIONS TO A FULL AMPLITUDE OF APPROXIMATELY 1/4". PROVIDE SAWCUT JOINT AROUND PERIMETER OF CURB LOCATIONS. CONCRETE MUST BE CLEAN AND FREE OF LAITANCE PRIOR TO NEW CURB BEING POURED.
2. THE VERTICAL FACE OF CURB AND TOP 6" OF CURB MUST BE PAINTED YELLOW.

7 S5.12 SLAB EDGE/CURB REINFORCING
NTS

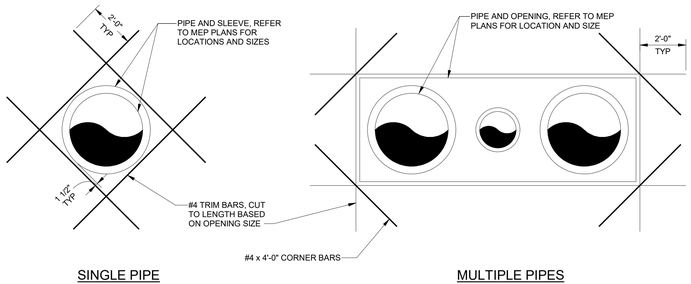

SINGLE PIPE MULTIPLE PIPES

NOTES:
1. FOR SINGLE PIPE OPENINGS, PLACE TRIM BARS AT 45-DEGREES TO PRIMARY SLAB REINF.
2. DO NOT POUR CONCRETE TIGHT TO PIPES, PROVIDE ISOLATION MATERIAL. ISOLATION NOT REQ'D WHERE SHRINKAGE COMPENSATING CONC IS USED.

3 S5.12 SLAB-ON-GRADE OPENINGS
NTS

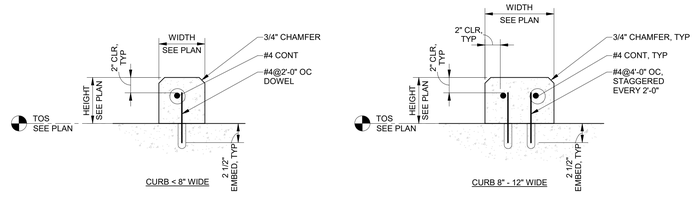

4 S5.12 TYPICAL ISOLATED CURB DETAIL
NTS

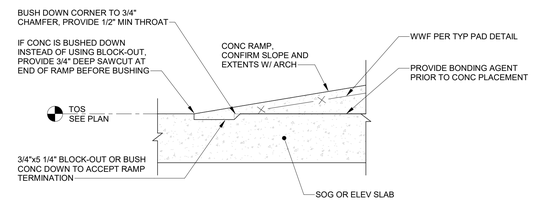

5 S5.12 TYPICAL CONCRETE RAMP DETAIL
NTS

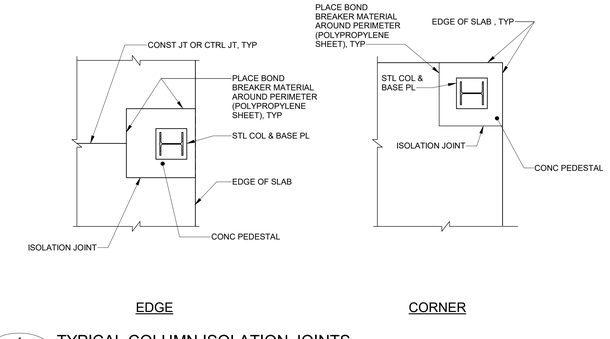

EDGE CORNER

1 S5.12 TYPICAL COLUMN ISOLATION JOINTS
NTS

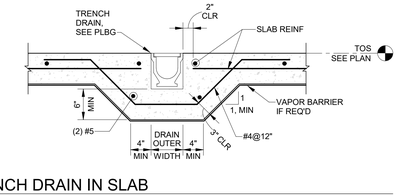

2 S5.12 TRENCH DRAIN IN SLAB
NTS

tsk
314 South Water Street,
Suite 100
Henderson, NV 89015
phone: 702.456.3000
fax: 702.898.6209
www.tska.com

THESE DRAWINGS AND SPECIFICATIONS ARE THE PROPERTY OF TATE SNYDER KIMSEY ARCHITECTS AND MAY NOT BE REPRODUCED OR USED FOR ANY PURPOSE WITHOUT THE ARCHITECTS WRITTEN CONSENT. AS INSTRUMENTS OF SERVICE, THESE DOCUMENTS ARE NOT FINAL AND READY FOR USE, AND THEREFORE NOT VALID, UNLESS THEY ARE SEALED, SIGNED AND DATED.

Consultant

Kimley»Horn

PLEASE RECYCLE

Project
WEST WENDOVER NEW FS #13

ANYWHERE BUT HERE

Job No: 092767002

Owner
CITY OF WEST WENDOVER

NOT FOR CONSTRUCTION

Project Status

REVISIONS		
REV	DATE	DESCRIPTION

Sheet Title
SLAB-ON-GRADE DETAILS

Date: Issue Date
Sheet No:
S5.12

BIM 360://WEST WENDOVER FIRE STATION/092767002 - WEST WENDOVER FS_STR_R21.rvt

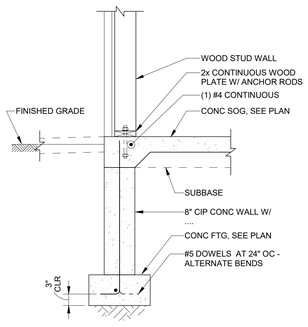

5 S5.21 EXTERIOR WOOD STUD WALL FOOTING
NTS

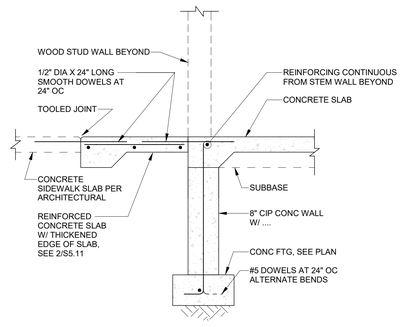

6 S5.21 EXTERIOR WOOD STUD WALL FOOTING AT WALL OPENING
NTS

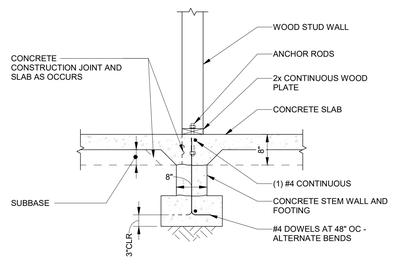

1 S5.21 INTERIOR WOOD STUD WALL FOOTING
NTS

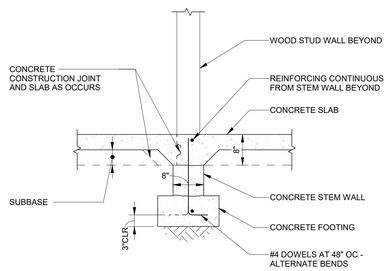

2 S5.21 INTERIOR WOOD STUD WALL FOOTING AT WALL OPENING
NTS

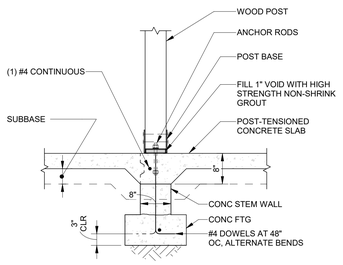

3 S5.21 INTERIOR WOOD POST FOOTING
NTS

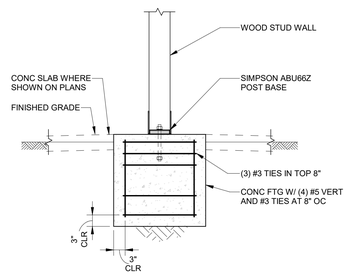

4 S5.21 EXTERIOR WOOD POST ON PEDESTAL
NTS

tsk
314 South Water Street,
Suite 100
Henderson, NV 89015
phone: 702.456.3000
fax: 702.898.6209
www.tska.com

THESE DRAWINGS AND SPECIFICATIONS ARE THE PROPERTY OF TATE SNYDER KIMSEY ARCHITECTS AND MAY NOT BE REPRODUCED OR USED FOR ANY PURPOSE WITHOUT THE ARCHITECTS WRITTEN CONSENT. AS INSTRUMENTS OF SERVICE, THESE DOCUMENTS ARE NOT FINAL AND READY FOR USE, AND THEREFORE NOT VALID, UNLESS THEY ARE SEALED, SIGNED AND DATED.

Consultant

Kimley»Horn

PLEASE RECYCLE

Project
WEST WENDOVER NEW FS #13

ANYWHERE BUT HERE

Job No: 092767002

Owner
CITY OF WEST WENDOVER

NOT FOR CONSTRUCTION

Project Status

REVISIONS		
REV	DATE	DESCRIPTION

Sheet Title
WOOD DETAILS

Date: Issue Date
Sheet No:
S5.21

BIM 360://WEST WENDOVER FIRE STATION/092767002 - WEST WENDOVER FS_STR_R21.rvt

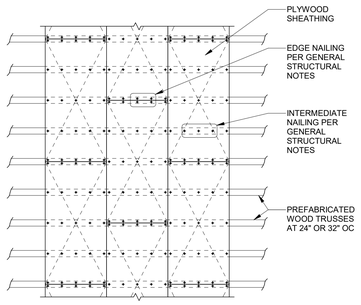

4 S5.22 TYPICAL DETAIL - ROOF PLYWOOD AT PREFABRICATED WOOD TRUSSES
NTS

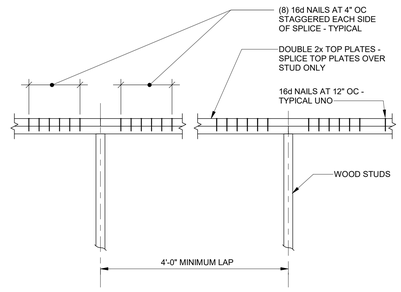

5 S5.22 TYPICAL DETAIL - DOUBLE TOP PLATE SPLICE
NTS

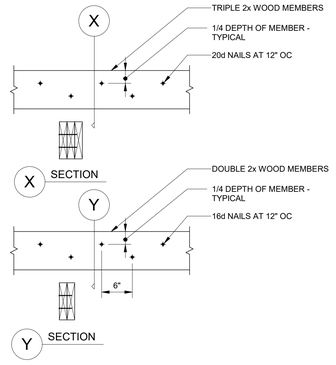

6 S5.22 TYPICAL DETAIL - BUILT-UP WOOD MEMBERS
NTS

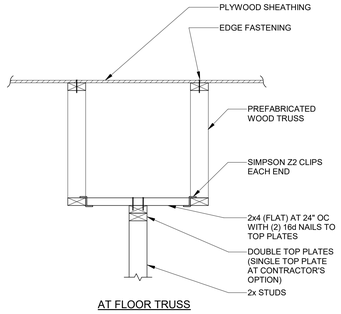

AT FLOOR TRUSS

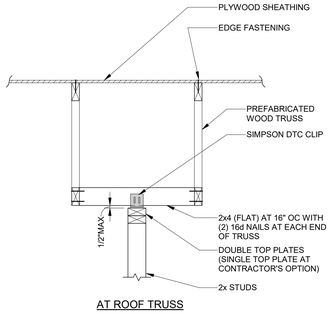

AT ROOF TRUSS

1 S5.22 TYPICAL DETAIL - NON-BEARING WALL AT WOOD TRUSS
NTS

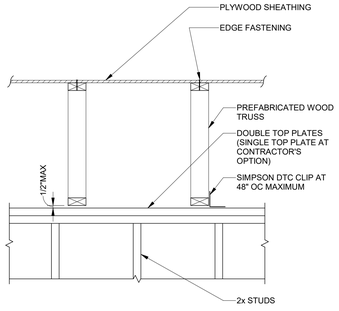

2 S5.22 TYPICAL DETAIL - INTERIOR NON-BEARING STUD WALLS AT TRUSSES OR TJI'S
NTS

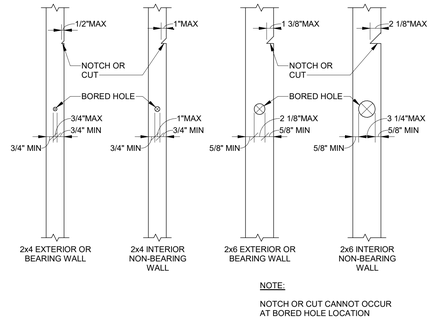

NOTE:

NOTCH OR CUT CANNOT OCCUR AT BORED HOLE LOCATION

3 S5.22 TYPICAL DETAIL - TYPICAL ALLOWABLE HOLES AND NOTCHES IN WOOD STUDS
NTS

tsk
314 South Water Street,
Suite 100
Henderson, NV 89015
phone: 702.456.3000
fax: 702.898.6209
www.tska.com

THESE DRAWINGS AND SPECIFICATIONS ARE THE PROPERTY OF TATE SNYDER KIMSEY ARCHITECTS AND MAY NOT BE REPRODUCED OR USED FOR ANY PURPOSE WITHOUT THE ARCHITECTS WRITTEN CONSENT. AS INSTRUMENTS OF SERVICE, THESE DOCUMENTS ARE NOT FINAL AND READY FOR USE, AND THEREFORE NOT VALID, UNLESS THEY ARE SEALED, SIGNED AND DATED.

Consultant

Kimley»Horn

PLEASE RECYCLE

Project
WEST WENDOVER NEW FS #13

ANYWHERE BUT HERE

Job No: 092767002

Owner
CITY OF WEST WENDOVER

NOT FOR CONSTRUCTION

Project Status

REVISIONS		
REV	DATE	DESCRIPTION

Sheet Title
WOOD DETAILS

Date: Issue Date
Sheet No:
S5.22

BIM 360://WEST WENDOVER FIRE STATION/092767002 - WEST WENDOVER FS_STR_R21.rvt

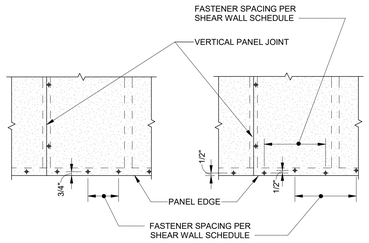

SINGLE ROW OF FASTENERS DOUBLE ROW OF FASTENERS

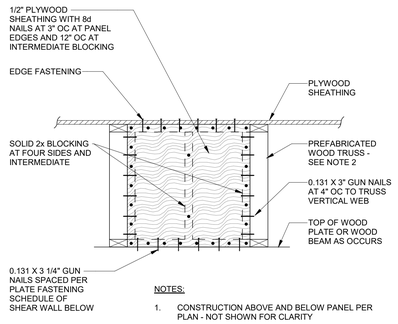

NOTES:

1. CONSTRUCTION ABOVE AND BELOW PANEL PER PLAN - NOT SHOWN FOR CLARITY
2. TRUSS MANUFACTURER SHALL PROVIDE VERTICAL WEB TO MATCH LOCATION OF SHEAR PANEL

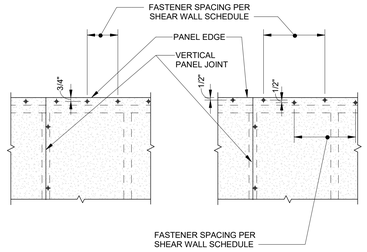

SINGLE ROW OF FASTENERS DOUBLE ROW OF FASTENERS

8 S5.23 TYPICAL DETAIL - SHEAR WALL PANEL ATTACHMENT AT SILL PLATE
NTS

9 S5.23 PLYWOOD SHEAR BLOCKING
NTS

10 S5.23 TYPICAL DETAIL - SHEAR WALL PANEL ATTACHMENT AT TOP PLATE
NTS

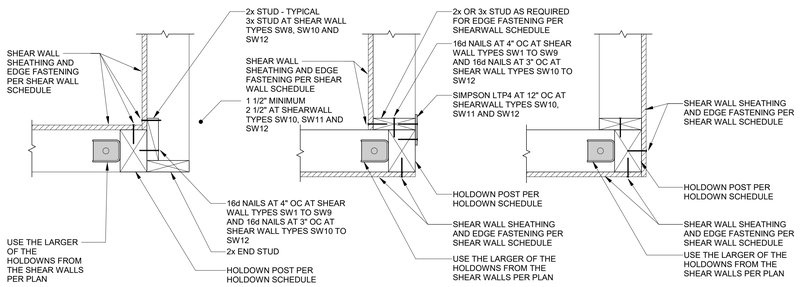

SHEATHING AT INSIDE FACE SHEATHING AT INSIDE/OUTSIDE FACE SHEATHING AT OUTSIDE FACE

NOTE:

THIS DETAIL ONLY APPLIES WHEN SHEATHING IS PLACED ON ONE SIDE OF THE WALL ONLY

5 S5.23 TYPICAL DETAIL - PLAN VIEW - SHEARWALLS AND HOLDOWNS AT WALL CORNERS
NTS

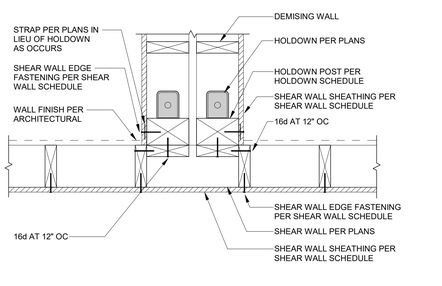

6 S5.23 TYPICAL DETAIL - PLAN VIEW - DEMISING WALL AT EXTERIOR WALL
NTS

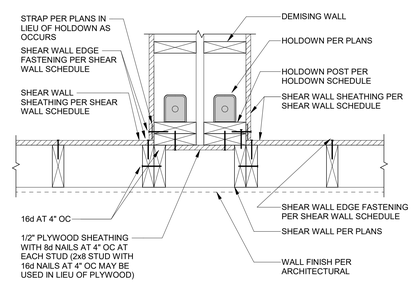

7 S5.23 TYPICAL DETAIL - PLAN VIEW - CORRIDOR SHEAR WALL DEMISING WALL
NTS

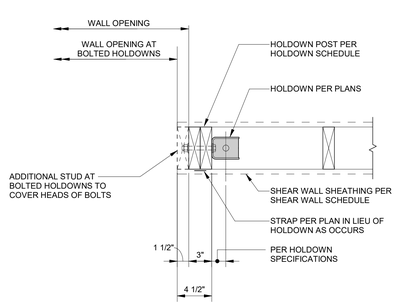

1 S5.23 TYPICAL DETAIL - PLAN VIEW - HOLDOWN AT OPENING
NTS

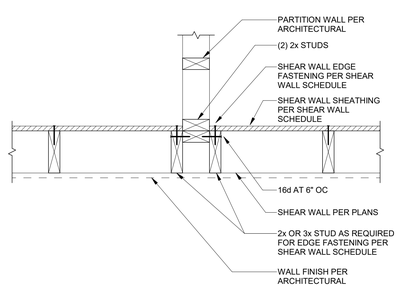

NOTE:

PLYWOOD MAY BE PLACED ON EXTERIOR FACE OR INTERIOR FACE OF SHEAR WALL

2 S5.23 TYPICAL DETAIL - PLAN VIEW - SHEAR WALL AT PARTITION WALL
NTS

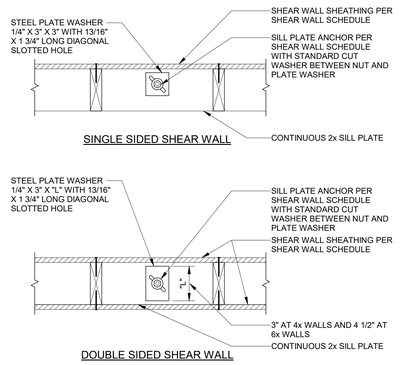

3 S5.23 TYPICAL DETAIL - PLAN VIEW - PLATE WASHER AT SHEAR WALL SILL PLATE ANCHOR
NTS

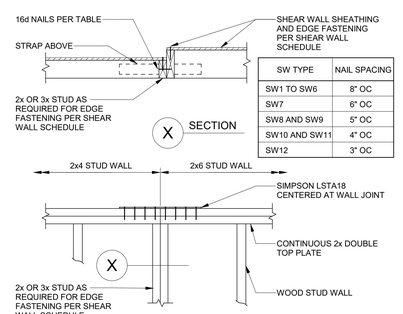

SW TYPE	NAIL SPACING
SW1 TO SW6	8" OC
SW7	6" OC
SW8 AND SW9	5" OC
SW10 AND SW11	4" OC
SW12	3" OC

4 S5.23 TYPICAL DETAIL - SHEAR WALL AT TRANSITION OF 2x4 TO 2x6 WALL
NTS

tsk
314 South Water Street,
Suite 100
Henderson, NV 89015
phone: 702.456.3000
fax: 702.898.6209
www.tska.com

THESE DRAWINGS AND SPECIFICATIONS ARE THE PROPERTY OF TATE SNYDER KIMSEY ARCHITECTS AND MAY NOT BE REPRODUCED OR USED FOR ANY PURPOSE WITHOUT THE ARCHITECTS WRITTEN CONSENT. AS INSTRUMENTS OF SERVICE, THESE DOCUMENTS ARE NOT FINAL AND READY FOR USE, AND THEREFORE NOT VALID, UNLESS THEY ARE SEALED, SIGNED AND DATED.

Consultant

Kimley»Horn

PLEASE RECYCLE

Project
WEST WENDOVER NEW FS #13

ANYWHERE BUT HERE

Job No: 092767002

Owner
CITY OF WEST WENDOVER

NOT FOR CONSTRUCTION

Project Status

REVISIONS		
REV	DATE	DESCRIPTION

Sheet Title
WOOD DETAILS

Date: Issue Date
Sheet No:
S5.23

BIM 360://WEST WENDOVER FIRE STATION/092767002 - WEST WENDOVER FS_STR_R21.rvt

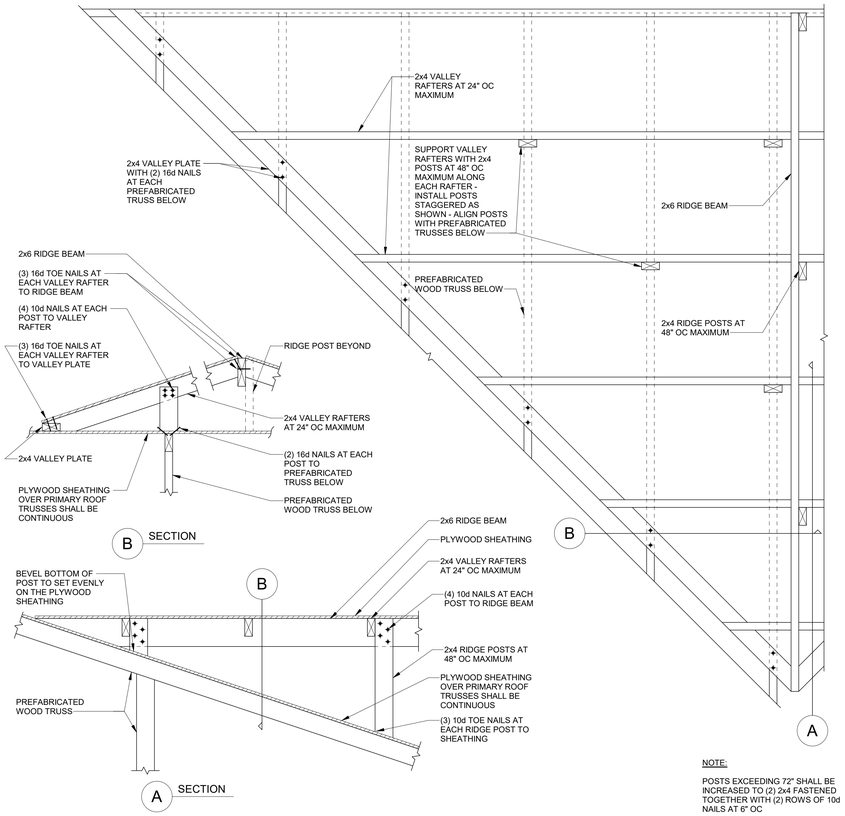

5 / S5.24 TYPICAL DETAIL - PLAN VIEW - TYPICAL OVER FRAMING AT PREFABRICATED WOOD TRUSSES

NTS

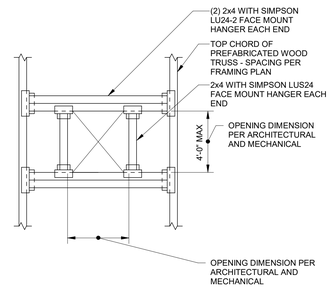

6 / S5.24 TYPICAL DETAIL - FRAMING AROUND SMALL ROOF OPENING

NTS

NAIL DIMENSIONS

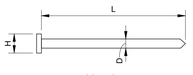

COMMON

L = LENGTH
D = DIAMETER
H = HEAD DIAMETER

TYPE		PENNYWEIGHT						
		6d	7d	8d	10d	12d	16d	20d
	L	2"	2 1/4"	2 1/2"	3"	3 1/4"	3 1/2"	4"
COMMON	D	0.113"	0.113"	0.131"	0.148"	0.148"	0.162"	0.192"
	H	0.266"	0.266"	0.281"	0.312"	0.312"	0.344"	0.406"

NOTES:

1. WHERE PENNYWEIGHTS ARE SPECIFIED, NAIL DIMENSIONS SHALL MATCH OR EXCEED THIS SCHEDULE UNLESS NOTED OTHERWISE.
2. ALL ALTERNATES OR SUBSTITUTIONS MUST BE SUBMITTED TO THE ENGINEER OF RECORD FOR REVIEW AND APPROVAL.

1 / S5.24 TYPICAL DETAIL - NAIL DIMENSIONS SCHEDULE

NTS

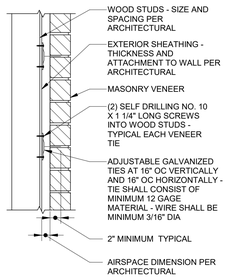

2 / S5.24 TYPICAL DETAIL - VENEER CONNECTION AT WOOD STUD WALL

NTS

FASTENING SCHEDULE U.N.O.

CONNECTED ELEMENTS	FASTENER SIZE AND PATTERN
JOIST TO ALL SILL OR GIRDER, TOE NAIL	(3) 8d
BRIDGING TO JOIST, TOE NAIL EACH END	(2) 8d
PLATE TO JOIST OR BLOCKING, FACE NAIL	16d AT 16" OC
TOP PLATE TO STUD, END NAIL	(2) 16d
STUD TO PLATE	(4) 8d, TOE NAIL OR (2) 16d, END NAIL
DOUBLED STUDS, FACE NAIL	16d AT 24" OC
DOUBLED TOP PLATES, FACE NAIL	16d AT 16" OC
TOP PLATE, LAPS AND INTERSECTIONS, FACE NAIL	(2) 16d
CONTINUOUS HEADER, TWO PIECES	16d AT 16" OC ALONG EACH EDGE
CEILING JOISTS TO PLATE, TOE NAIL	(3) 8d
CONTINUOUS HEADER TO STUDS, TOE NAIL	(4) 8d
CEILING JOISTS, LAPS OVER PARTITIONS, FACE NAIL	(3) 16d
CEILING JOISTS TO PARALLEL RAFTERS, FACE NAIL	(3) 16d
RAFTER TO PLATE, TOE NAIL	(3) 8d
BUILT-UP CORNER STUDS	16d AT 24" OC

3 / S5.24 TYPICAL WOOD FASTENING SCHEDULE

NTS

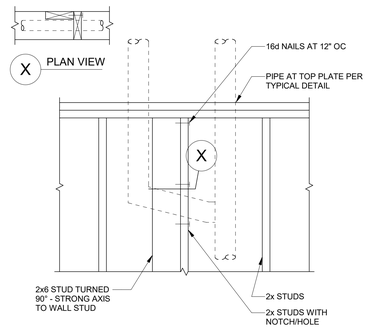

4 / S5.24 TYPICAL DETAIL - PIPE AT WOOD STUD WALL

NTS

tsk
314 South Water Street,
Suite 100
Henderson, NV 89015
phone: 702.456.3000
fax: 702.898.6209
www.tska.com

THESE DRAWINGS AND SPECIFICATIONS ARE THE PROPERTY OF TATE SNYDER KIMSEY ARCHITECTS AND MAY NOT BE REPRODUCED OR USED FOR ANY PURPOSE WITHOUT THE ARCHITECTS WRITTEN CONSENT. AS INSTRUMENTS OF SERVICE, THESE DOCUMENTS ARE NOT FINAL AND READY FOR USE, AND THEREFORE NOT VALID, UNLESS THEY ARE SEALED, SIGNED AND DATED.

Consultant

Kimley»Horn

PLEASE RECYCLE

Project

WEST WENDOVER NEW FS #13

ANYWHERE BUT HERE

Job No: 092767002

Owner

CITY OF WEST WENDOVER

NOT FOR CONSTRUCTION

Project Status

REVISIONS		
REV	DATE	DESCRIPTION

Sheet Title

WOOD DETAILS

Date: Issue Date

Sheet No:

S5.24

BIM 360://WEST WENDOVER FIRE STATION/092767002 - WEST WENDOVER FS_STR_R21.rvt

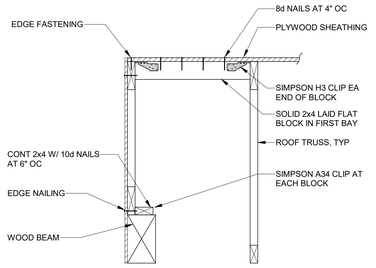

7 S5.26 WOOD TRUSS AT EXTERIOR WOOD STUD WALL

NTS

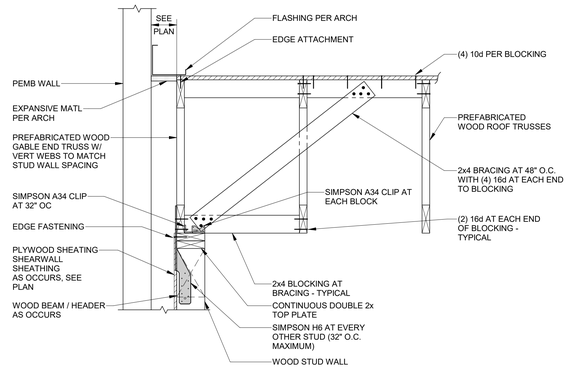

8 S5.26 WOOD TRUSS AT EXTERIOR WOOD STUD WALL

NTS

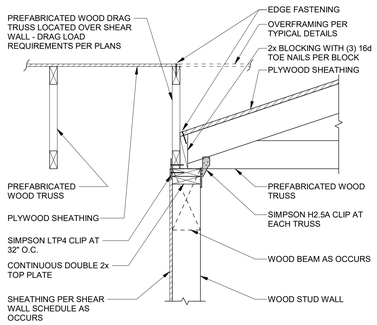

4 S5.26 WOOD TRUSS AT INTERIOR WOOD STUD WALL

NTS

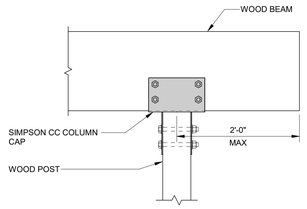

5 S5.26 WOOD BEAM TO WOOD POST CONNECTION

NTS

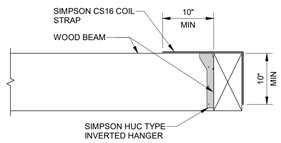

6 S5.26 INVERTED WOOD BEAM CONNECTION TO WOOD BEAM

NTS

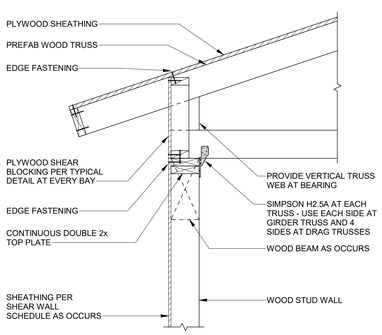

HIGH HEEL

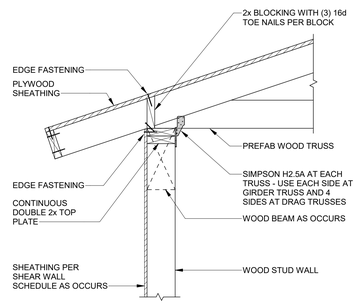

LOW HEEL

1 S5.26 WOOD TRUSS AT EXTERIOR WOOD STUD WALL

NTS

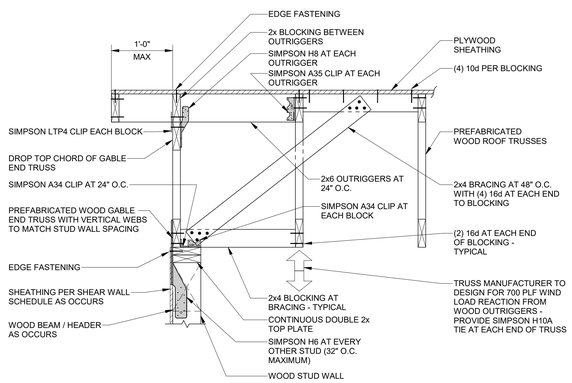

2 S5.26 WOOD TRUSS AT EXTERIOR WOOD STUD WALL

NTS

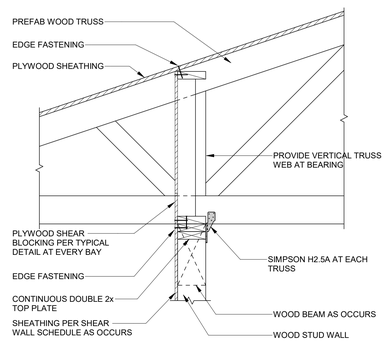

3 S5.26 WOOD TRUSS AT INTERIOR WOOD STUD WALL

NTS

BIM 360://WEST WENDOVER FIRE STATION/092767002 - WEST WENDOVER FS_STR_R21.rvt

tsk

314 South Water Street,
Suite 100
Henderson, NV 89015
phone: 702.456.3000
fax: 702.898.6209
www.tska.com

THESE DRAWINGS AND SPECIFICATIONS ARE THE PROPERTY OF TATE SNYDER KIMSEY ARCHITECTS AND MAY NOT BE REPRODUCED OR USED FOR ANY PURPOSE WITHOUT THE ARCHITECTS WRITTEN CONSENT. AS INSTRUMENTS OF SERVICE, THESE DOCUMENTS ARE NOT FINAL AND READY FOR USE, AND THEREFORE NOT VALID, UNLESS THEY ARE SEALED, SIGNED AND DATED.

Consultant

Kimley»Horn

PLEASE RECYCLE

Project

WEST WENDOVER NEW FS #13

ANYWHERE BUT HERE

Job No: 092767002

Owner

CITY OF WEST WENDOVER

NOT FOR CONSTRUCTION

Project Status

REVISIONS		
REV	DATE	DESCRIPTION

Sheet Title

WOOD DETAILS

Date: Issue Date

Sheet No:

S5.26

GENERAL NEW NOTES:

1. PRIOR TO SUBMITTING BID, VISIT THE JOB SITE AND BECOME FULLY ACQUAINTED WITH THE EXISTING CONDITIONS OF THE PROJECT. REVIEW THE GENERAL NOTES, SPECIFICATIONS AND OTHER DRAWINGS FOR ADDITIONAL REQUIREMENTS WHICH MAY NOT BE SPECIFICALLY CALLED OUT IN THIS PORTION OF THE CONSTRUCTION DOCUMENTS. NOTIFY ARCHITECT, ENGINEER AND/OR OWNER OF CONFLICTS OR DISCREPANCIES PRIOR TO SUBMISSION OF BID.
2. REFER TO ARCHITECTURAL DRAWINGS FOR RELATED CONSTRUCTION DETAILS AS APPLICABLE TO THE HVAC SYSTEM. VERIFY CHASES AND PENETRATIONS SHOWN ON ARCHITECTURAL DRAWINGS THAT ARE INTENDED FOR DUCTWORK AND PIPING MEET REQUIREMENTS.
3. ALL WORK SHALL CONFORM TO THE APPLICABLE LOCAL, STATE, AND FEDERAL CODES AND REGULATIONS, INCLUDING THE FOLLOWING:
   A. 2018 INTERNATIONAL BUILDING CODE
   B. 2018 INTERNATIONAL MECHANICAL CODE
   C. 2018 INTERNATIONAL PLUMBING CODE
   D. 2018 INTERNATIONAL ENERGY CONSERVATION CODE
   E. 2018 NATIONAL FIRE PROTECTION CODE
4. COORDINATE LOCATION OF ROOF PENETRATIONS WITH THE ARCHITECTURAL AND STRUCTURAL DRAWINGS.
5. PROVIDE SEISMIC RESTRAINTS AS NEEDED FOR THE MECHANICAL SYSTEMS IN THE PROJECT BASED ON THE SEISMIC ANALYSIS REQUIRED BY THE SPECIFICATIONS.
6. COORDINATE THE INSTALLATION OF THE MECHANICAL SYSTEMS WITH OTHER TRADES TO ENSURE A NEAT AND ORDERLY INSTALLATION. INSTALL DUCTWORK AND PIPING AS TIGHT TO STRUCTURE AS POSSIBLE. COORDINATE WITH OTHER TRADES TO AVOID CONFLICTS. COORDINATE INSTALLATION OF DUCTWORK AND PIPING TO AVOID CONFLICTS WITH ELECTRICAL PANELS, LIGHTING FIXTURES, ETC. ANY MODIFICATIONS REQUIRED DUE TO LACK OF COORDINATION WILL BE THE RESPONSIBILITY OF THE CONTRACTOR AT NO EXTRA COST TO THE OWNER.
7. ALL MECHANICAL EQUIPMENT SHOWN ON THE MECHANICAL PLANS SHALL BE PROVIDED BY DIVISION 23 UNLESS OTHERWISE NOTED.
8. NEW MECHANICAL EQUIPMENT, DUCTWORK AND PIPING ARE SHOWN AT APPROXIMATE LOCATIONS. FIELD MEASURE FINAL DUCTWORK AND PIPING LOCATIONS PRIOR TO FABRICATION AND MAKE ADJUSTMENTS AS REQUIRED TO FIT THE DUCTWORK AND PIPING WITHIN THE AVAILABLE SPACE. VERIFY THAT FINAL EQUIPMENT LOCATIONS MEET MANUFACTURER'S RECOMMENDATIONS REGARDING SERVICE CLEARANCE AND PROPER AIRFLOW CLEARANCE AROUND EQUIPMENT.
9. INDOOR AIR QUALITY MEASURES: PROTECT INSIDE OF (INSTALLED AND DELIVERED) DUCTWORK AND HVAC UNITS FROM EXPOSURE TO DUST, DIRT, PAINT AND MOISTURE. REPLACE INSULATION THAT HAS BECOME WET AT ANY TIME DURING CONSTRUCTION, DRYING THE INSULATION IS NOT ACCEPTABLE. SEAL ANY TEARS OR JOINTS OF INTERNAL FIBERGLASS INSULATION. REMOVE DEBRIS FROM CEILING/RETURN AIR PLENUM INCLUDING DUST. AN INDEPENDENT, PROFESSIONAL DUCT CLEANING COMPANY SHALL VACUUM CLEAN ANY DUCTWORK CONNECTED TO HVAC UNITS THAT WERE OPERATED DURING THE CONSTRUCTION PERIOD AFTER NEW FILTERS ARE INSTALLED AND PRIOR TO TURNING SYSTEM OVER TO THE OWNER. THE INTERNAL SURFACES AND ASSOCIATED COILS OF ANY HVAC UNITS THAT WERE OPERATED SHALL ALSO BE CLEANED.
10. INSTALL DUCTWORK AND PIPING PARALLEL TO BUILDING COLUMN LINES UNLESS OTHERWISE SHOWN OR NOTED.
11. OVERHEAD HANGERS AND SUPPORTS FOR EQUIPMENT, DUCTWORK AND PIPING SHALL BE FASTENED TO BUILDING JOISTS OR BEAMS. DO NOT ATTACH HANGERS AND SUPPORTS TO THE ABOVE FLOOR SLAB OR ROOF EXCEPT WHERE CONCRETE INSERTS IN CONCRETE SLABS ARE ALLOWED BY THE SPECIFICATIONS.
12. COORDINATE LOCATION OF EQUIPMENT SUPPORTS WITH LOCATION OF EQUIPMENT ACCESS PANELS/DOORS TO ENABLE SERVICE OF EQUIPMENT AND/OR FILTER REPLACEMENT.
13. SEAL PENETRATIONS THROUGH THE BUILDING COMPONENTS IN ACCORDANCE WITH THE CONTRACT SPECIFICATIONS. FIREPROOF PENETRATIONS THROUGH FIRE RATED COMPONENTS IN ACCORDANCE WITH U.L. REQUIREMENTS.
14. DRAIN, FLUSH, AND REFILL ALL PIPING SYSTEMS NECESSARY TO PERFORM THE WORK. REFERENCE SPECIFICATIONS FOR FLUSHING PERFORMANCE REQUIREMENTS AND SUBMIT FLUSHING PLAN TO ENGINEER FOR REVIEW. PROVIDE CHEMICAL TREATMENT FOR ALL PIPING SYSTEMS AFTER FLUSHING AND REFILLING THE SYSTEM.
15. COORDINATE THE EXACT MOUNTING SIZE AND FRAME TYPE OF DIFFUSERS, REGISTERS AND GRILLES WITH THE SUPPLIER TO MEET THE CEILING, WALL AND DUCT INSTALLATION REQUIREMENTS.
16. ADJUST LOCATION OF CEILING DIFFUSERS, REGISTERS AND GRILLES AS REQUIRED TO ACCOMMODATE FINAL CEILING GRID AND LIGHTING LOCATIONS.
17. PAINT PORTIONS OF DUCTWORK AND INSULATION THAT ARE EXPOSED TO VIEW BY THE INSTALLATION OF DIFFUSERS, REGISTERS, AND GRILLES IN CEILINGS OR WALLS FLAT BLACK. PORTIONS INCLUDE BOTH THE INTERIOR OF UNLINED DUCTWORK AND THE EXTERIOR OF DUCTWORK AND INSULATION.
18. DUCTWORK CROSSING FIRE RATED WALLS OR OTHER FIRE RATED ASSEMBLIES SHALL BE MINIMUM 26 GAUGE SHEET METAL.
19. PROVIDE FIRE OR FIRE/SMOKE DAMPERS, AS APPLICABLE, IN DUCTWORK AT CEILINGS AND WALLS AT LOCATIONS SHOWN ON THE PLANS. FIRE AND FIRE/SMOKE DAMPERS SHALL CONFORM TO NFPA AS APPLICABLE. COORDINATE SLEEVE LENGTH WITH REQUIREMENTS OF INSTALLED LOCATION.
20. PROVIDE WALL OR DUCT ACCESS PANELS OR DOORS FOR ACCESS TO FIRE AND FIRE/SMOKE DAMPERS. ACCESS PANEL OR DOOR SHALL BE MINIMUM SIZE OF 10" BY 10" AND SHALL BE INSTALLED WITHIN 12" OF DAMPER. PROVIDE A REMOVABLE DUCT SECTION WHERE DUCT SIZE IS TOO SMALL FOR A 10" BY 10" ACCESS DOOR.
21. LOCATE AND SET THERMOSTATS AND HUMIDISTATS AT LOCATIONS SHOWN ON PLANS. VERIFY EXACT LOCATIONS WITH ARCHITECT PRIOR TO INSTALLATION. INSTALL DEVICES WITH TOP OF DEVICE AT MAXIMUM 48" AFF TO MEET ADA REQUIREMENTS UNLESS NOTED OTHERWISE ON PLANS. PROVIDE INSULATED BACKING FOR THERMOSTATS MOUNTED ON EXTERIOR BUILDING WALLS. INSTALL WIRING IN CONDUIT PROVIDED BY ELECTRICAL CONTRACTOR. AT A MINIMUM, PROVIDE CONDUIT IN THE WALL FROM THE JUNCTION BOX TO 6" ABOVE THE CEILING.
22. COORDINATE THE LOCATION AND ELEVATION OF WALL-MOUNTED DEVICES WITH PRESENTATION BOARDS, DISPLAY CABINETS, SHELVES OR OTHER COMPONENTS SHOWN ON THE ARCHITECTURAL DRAWINGS THAT ARE TO BE INSTALLED UNDER OTHER DIVISIONS. CONTRACTOR WILL NOT BE REIMBURSED FOR RELOCATION OF WALL-MOUNTED DEVICES CAUSED BY A LACK OF COORDINATION.
23. PROVIDE A MANUAL BALANCING DAMPER IN EACH DUCT TAKEOFF FROM SUPPLY, RETURN, OUTDOOR AND EXHAUST AIR DUCTS.
24. PROVIDE A PREFABRICATED 45 DEGREE, HIGH EFFICIENCY, RECTANGULAR/ROUND BRANCH DUCT TAKEOFF FITTING FOR BRANCH DUCT CONNECTIONS AND TAKE-OFFS TO INDIVIDUAL DIFFUSERS, REGISTERS AND GRILLES. PROVIDE WITH INTEGRAL MANUAL BALANCING DAMPER AND LOCKING QUADRANT WHERE INDICATED ON PLANS.
25. BRANCH DUCTWORK TO AIR OUTLETS SHALL BE SAME SIZE AS OUTLET NECK SIZE UNLESS OTHERWISE NOTED.
26. REFER TO SPECIFICATIONS FOR DUCTWORK AND PIPING INSULATION REQUIREMENTS. DUCT SIZES ON MECHANICAL PLANS INDICATE CLEAR INSIDE AIRFLOW DIMENSIONS, INCREASE SHEET METAL SIZES ACCORDINGLY TO ACCOUNT FOR THICKNESS OF DUCT LINER.
27. FLEXIBLE DUCTWORK SHALL NOT EXCEED 5'-0" IN LENGTH AND SHALL BE INSTALLED AND SUPPORTED TO AVOID SHARP BENDS AND SAGGING. REFER TO SPECIFICATIONS FOR ADDITIONAL REQUIREMENTS.
28. RIGIDLY SUSPEND UNIT HEATER FROM STRUCTURE WITH SUPPORTING ANGLES AND ALL-THREAD HANGING RODS IN ACCORDANCE WITH MANUFACTURER'S RECOMMENDATIONS.
29. PROVIDE EQUIPMENT VENTS AND FLUES PER EQUIPMENT MANUFACTURERS RECOMMENDATIONS AND EQUIPMENT SPECIFICATIONS. KEEP PENETRATIONS THROUGH ROOF A MINIMUM OF 10'-0" FROM HVAC EQUIPMENT FRESH AIR INLETS AND 2'-0" FROM ROOF PARAPETS.
30. PROVIDE WALL MOUNTED LOUVERS AND DAMPERS WITH SUITABLE MOUNTING FRAME TO MATCH WALL CONSTRUCTION. COORDINATE WITH ARCHITECTURAL DRAWINGS.
31. PROVIDE A NEW SET OF AIR FILTERS IN UNITS PRIOR TO TESTING, ADJUSTING AND BALANCING AND BEFORE TURNING SYSTEM(S) OVER TO OWNER.

MECHANICAL SYMBOLS & LEGENDS

THIS IS A MASTER LEGEND, NOT ALL ABBREVIATIONS OR SYMBOLS ARE USED ON DRAWINGS.

HVAC SYMBOLS & LEGENDS

ALL DUCT DIMENSIONS SHOWN ON DRAWINGS ARE INSIDE CLEAR DIMENSIONS. REFER TO HVAC SPECIFICATIONS FOR DUCTWRAP AND LINER INFORMATION. FINAL DUCT DIMENSION SHALL ACCOUNT FOR TYPE & THICKNESS OF INSULATION (TYP).

SYMBOL	DESCRIPTION
	ROUND DIFFUSER/REGISTER ANNOTATION SD-1 (TYPE) 12"Ø / 500 (NECK SIZE) / (CFM)
	RECTANGULAR DIFFUSER/REGISTER ANNOTATION RG-1 (TYPE) 22x22" / 500 (NECK SIZE) / (CFM)
	MANUAL VOLUME/BALANCING DAMPER
	DUCT WITH ACOUSTIC LINING
	SQUARE TO ROUND DUCT TRANSITION
	HIGH EFFICIENCY TAKEOFF (45 DEGREES) RECTANGLE TO ROUND BRANCH FITTING WITH VOLUME DAMPER
	FLEXIBLE DUCT CONNECTOR AT EQUIPMENT
	ELBOW WITH TURNING VANES
	SUPPLY OR OUTSIDE AIR DUCT UP
	SUPPLY OR OUTSIDE AIR DUCT DOWN
	RETURN OR EXHAUST AIR DUCT UP
	RETURN OR EXHAUST AIR DUCT DOWN
	DUCT SMOKE DETECTOR
FD	FIRE DAMPER
SD	SMOKE DAMPER
FSD	COMBINATION FIRE/SMOKE DAMPER
VD	VOLUME/MANUAL DAMPER
MD	MOTORIZED DAMPER
BD	BACKDRAFT DAMPER

CONTROL DEVICES

THERMOSTATS (USER ADJUSTABLE) - TOP OF DEVICE 48" AFF
CONTROL DEVICES - TOP OF DEVICE 48" AFF

INSTALL ALL DEVICES AT ELEVATIONS SHOWN ABOVE UNLESS NOTES OTHERWISE IN DRAWINGS OR SPECIFICATIONS. ELEVATIONS ARE DIMENSIONED FROM AFF OR AFG TO TOP OF DEVICE. INSTALL ALL DEVICES IN COMPLIANCE WITH CURRENT ADA AND LOCAL REQUIREMENTS. REFER TO ARCHIECTURAL DRAWINGS FOR LOCATIONS & ELEVATIONS.

SYMBOL	DESCRIPTION
T	THERMOSTAT
H	HUMIDISTAT
TS	TEMPERATURE SENSOR
HS	HUMIDITY SENSOR
DP	DIFFERENTIAL PRESSURE SENSOR
SP	STATIC PRESSURE SENSOR
CO	CARBON MONOXIDE SENSOR
CO2	CARBON DIOXIDE SENSOR
FS	FLOW SWITCH
PS	PULL STATION (REFER TO KITCHEN DRAWINGS)

GENERAL ANNOTATIONS

	POINT OF CONNECTION (POC) - NEW ITEMS TO EXISTING ITEMS
	ACCESS PANEL (AP)
RTU X	MECHANICAL EQUIPMENT. (CONTRACTOR FURNISHED & INSTALLED UNLESS NOTED OTHERWISE). REFER TO MECHANICAL SCHEDULES.
1	MECHANICAL PLAN KEYNOTE
1 M0.00	DETAIL REFERENCE CALLOUT. UPPER VALUE = DETAIL NUMBER. LOWER VALUE = SHEET NUMBER
1 M0.00	SECTION VIEW REFERENCE CALLOUT. UPPER VALUE = DETAIL NUMBER. LOWER VALUE = SHEET NUMBER

ABBREVIATIONS

ABBREVIATION	DESCRIPTION
AABC	AMERICAN AIR BALANCE COUNCIL
AFF	ABOVE FINISHED FLOOR
AHJ	AUTHORITY HAVING JURISDICTION
AHU	AIR HANDLING UNIT
AI	ANALOG INPUT
AO	ANALOG OUTPUT
AP	ACCESS PANEL
APD	AIR PRESSURE DROP
BAS	BUILDING AUTOMATION SYSTEM
BD	BACKDRAFT DAMPER
BFP	BACKFLOW PREVENTER DEVICE
BFF	BELOW FINISHED FLOOR
BHP	BRAKE HORSE POWER
BI	BINARY INPUT
BO	BINARY OUTPUT
BOD	BOTTOM OF DUCT
BTU/H	BRITISH THERMAL UNIT PER HOUR
CFM	CUBIC FEET PER MINUTE
CH	CHILLER
CLG	COOLING
CRAC	COMPUTER ROOM AIR CONDITIONING UNIT
CU	CONDENSING UNIT
CV	CONTROL VALVE
(D)	DEMOLISHED
dB	DECIBLES
DB	DRY BULB TEMPERATURE
DDC	DIRECT DIGITAL CONTROL
DI	DIGITAL INPUT
DIA	DIAMETER
DISC	DISCONNECT
DN	DOWN
DX	DIRECT EXPANSION
(E)	EXISTING
EA	EXHAUST AIR
EAT	ENTERING AIR TEMPERATURE
EER	ENERGY EFFICIENCY RATIO
EF	EXHAUST FAN
EFF	EFFICIENCY
ESP	EXTERNAL STATIC PRESSURE
ETR	EXISTING TO REMAIN
EWT	ENTERING WATER TEMPERATURE
°F	DEGREES FAHRENHEIT
FFA	FINISHED FLOOR ABOVE
FFB	FINISHED FLOOR BELOW
FF	FINISHED FLOOR
FPI	FINS PER INCH
FPM	FEET PER MINUTE
GA	GAGE OR GAUGE
GAL	GALLONS
GPM	GALLONS PER MINUTE
HD	HEAD
HP	HORSEPOWER
HSPF	HEATING SEASONAL PERFORMANCE FACTOR
HTG	HEATING
IBC	INTERNATIONAL BUILDING CODE
IMC	INTERNATIONAL MECHANICAL CODE
kW	KILOWATT
LAT	LEAVING AIR TEMPERATURE
LBS	POUNDS
LWT	LEAVING WATER TEMPERATURE
MAX	MAXIMUM
MBH	ONE THOUSAND BTUH
MCA	MINIMUM CIRCUIT AMPS
MFR	MANUFACTURER
MIN	MINIMUM
MOCP	MAXIMUM OVER CURRENT PROTECTION
N/A	NOT APPLICABLE
N/C	NORMALLY CLOSED
N/O	NORMALLY OPEN
NC	NOISE CRITERIA
NEBB	NATIONAL ENVIROMENTAL BALANCING BUREAU
NEC	NATIONAL ELECTRIC CODE
NFPA	NATIONAL FIRE PROTECTION ASSOCIATION
NIC	NOT IN CONTRACT
NOM	NOMINAL
NTS	NOT TO SCALE
OA	OUTSIDE AIR
OAT	OUTSIDE AIR TEMPERATURE
OBD	OPPOSED BLADE DAMPER
PD	PRESSURE DROP
PRV	PRESSURE REDUCING VALVE
PROVIDE	FURNISH & INSTALL
PSI	POUNDS PER SQUARE INCH
PSIA	POUNDS PER SQUARE INCH ABSOLUTE
PSID	POUNDS PER SQUARE INCH DIFFERENTIAL
PSIG	POUNDS PER SQUARE INCH GAUGE
QTY	QUANTITY
(R)	EXISTING TO BE RELOCATED
RA	RETURN AIR
RH	RELATIVE HUMIDITY
RPM	REVOLUTIONS PER MINUTE
SA	SUPPLY AIR
SD	SMOKE DAMPER
SD	SUPPLY DUCT
SEER	SEASONAL ENERGY EFFICIENCY RATIO
SF	SUPPLY FAN
SH	SENSIBLE HEAT CAPACITY
"SP	STATIC PRESSURE (INCHES OF)
SPECS	SPECIFICATIONS
SQFT	SQUARE FEET
SS	STAINLESS STEEL
T	TEMPERATURE
TAB	TEST AND BALANCE WORK AND REPORT
TBD	TO BE DETERMINED
TFA	TO FLOOR ABOVE
TFB	TO FLOOR BELOW
TH	TOTAL HEAT CAPACITY
TSP	TOTAL STATIC PRESSURE
TYP	TYPICAL
U/G	UNDERGROUND
UBC	UNIFORM BUILDING CODE
UMC	UNIFORM MECHANICAL CODE
UNO	UNLESS NOTED OTHERWISE
V/PH/HZ	VOLTAGE/PHASE/HERTZ
VAV	VARIABLE AIR VOLUME
VFD	VARIABLE FREQUENCY DRIVE
VRF	VARIABLE REFRIGERANT FLOW
VRV	VARIABLE REFRIGERANT VOLUME
W/	WITH
W/O	WITHOUT
WB	WET BULB TEMPERATURE
WG	WATER GAUGE
WPD	WATER PRESSURE DROP
XP	EXPLOSION PROOF

PIPING SYMBOLS & LEGENDS

SYMBOL	DESCRIPTION
	DIRECTION OF FLOW
	SHUTOFF VALVE (SO)
	BALANCING VALVE WITH PRESSURE PORTS (BLV)
	BUTTERFLY VALVE (BFV)
	CHECK VALVE (CHV)
	TRIPLE DUTY VALVE (TDV)
	BACKFLOW PREVENTOR (BP)
	PRESSURE REDUCING VALVE (PRV)
	STRAINER (STR)
	STRAINER WITH 3/4" HOSE END DRAIN VALVE
	2-WAY CONTROL VALVE
	3-WAY CONTROL VALVE
	REDUCER
	WATER HAMMER ARRESTOR
	UNION
	PRESSURE GAGE WITH GAUGE COCK
	THERMOMETER
	PIPING TEE DOWN
	PIPING TEE UP
	PIPING ELBOW UP
	PIPING ELBOW DOWN
	CAP
	FLEXIBLE COUPLING
	PUMP

PIPING LINETYPES

SYMBOL	DESCRIPTION
CD	CONDENSATE DRAIN (CD)
G	NATURAL GAS (G)
RL	REFRIGERANT LIQUID (RL)
RS	REFRIGERANT SUCTION (RS)
CWS	CHILLED WATER SUPPLY (CWS)
CWR	CHILLED WATER RETURN (CWR)
CS	CONDENSER WATER SUPPLY (CS)
CR	CONDENSER WATER RETURN (CR)
HWS	HEATING HOT WATER SUPPLY (HWS)
HWR	HEATING HOT WATER RETURN (HWR)

MECHANICAL SHEET LIST

SHEET NUMBER	SHEET NAME
M000	MECHANICAL SYMBOLS, ABBREVIATIONS, AND NOTES
M002	MECHANICAL SCHEDULES
M200	MECHANICAL FLOOR PLAN
M600	MECHANICAL DETAILS

Kimley»Horn

7900 RANCHARRAH PARKWAY
SUITE 100
RENO, NV 89511
PHONE: 775.787.7552

2023 ©

This document is an instrument of service prepared solely for Kimley-Horn's client and for a particular purpose. Any other use or reliance is without liability to Kimley-Horn.

SEALS

PRELIMINARY
FOR REVIEW ONLY
NOT FOR RECORDATION PURPOSES
Kimley»Horn
ENGINEER _____
PE NO. _____ DATE _____

WEST WENDOVER FIRE STATION #13

1121 N. GENE L. JONES WAY

CLIENT PROJECT INFO

NO:	DATE	DRAWING ISSUE DESCRIPTION

DESIGNED BY: AS
DRAWN BY: AS
CHECKED BY: MCM
SCALE: As indicated
DATE: 5/01/2023
PROJECT NO: 092767002
FILENAME:

MECHANICAL SYMBOLS, ABBREVIATIONS, AND NOTES

M000

5/2/2023 12:45:32 PM BIM 360://092767002-Wendover Fire Station/Wendover FS MEP.rvt

OUTDOOR CONDENSING UNIT SCHEDULE

NOTES:
1. PROVIDE LOW AMBIENT CONTROL TO 0°F.
2. EQUIPMENT SIZED FOR SUMMER AMBIENT OF 105°F AND WINTER AMBIENT OF 7°F.
3. COORDINATE WITH THE MANUFACTURER THE HORIZONTAL AND VERTICAL REFRIGERANT PIPE ROUTING TO DETERMINE PIPE SIZES FOR THE REFRIGERANT PIPING. MANUFACTURER SHALL PROVIDE DETAILED REFRIGERANT PIPING DIAGRAMS INCLUDING DIMENSIONAL DATA FOR ALL REFRIGERANT PIPING DEVICES. THE MANUFACTURER SHALL SIZE AND LOCATETHE ASSOCIATED REFRIGERANT TRAPS BASED ON THE ACTUAL ROUTING AND PROVIDE OTHER APPURTENANCES TO PROVIDE A FULLY FUNCTIONAL AND OPERATIONAL SYSTEM. COORDINATE WITH THE MANUFACTURER LOCATIONS FOR ALL REFRIGERANT PIPING DEVICES TO MAINTAIN SERVICEABILITY AND ACCESSIBILITY.
4. PROVIDE LIQUID LINE FILTER DRYER AND SIGHT GLASS.
5. PROVIDE CONCRETE HOUSEKEEPING PAD, SEE STRUCTURAL DRAWINGS.
6. PROVIDE FACTORY MOUNTED DISCONNECT INSTALLED ON SERVICE SIDE OF UNIT.
7. PROVIDE CONDENSER COIL HAIL GUARDS.
8. SELECT EQUIPMENT FOR ELEVATION OF 4500 FEET ABOVE SEA LEVEL.

	COOLING		COOLING		ELECTRICAL							
MARK	TOTAL CAP (TON)	REFRIGERANT TYPE	SUMMER AMBIENT DB (°F)	SEER	VOLTAGE	PHASE	HZ	MCA	ASSOCIATED UNIT	MANUFACTURER	MODEL	NOTES
CU-1	3.0	R-410	97.0	14	208 V	3	60 Hz	14 A	CC-1, F-1	TBD	TBD	1-12
CU-2	3.0	R-410	97.0	14	208 V	3	60 Hz	14 A	CC-2, F-1	TBD	TBD	1-12
CU-3	1.0	R-410	97.0	22	208 V	1	60 Hz	10 A	FC-1	LG	LSU120HSVS	1-12

EXHAUST FAN SCHEDULE

NOTES:
1. PROVIDE WITH 6" TO 4" ROUND REDUCER.
2. PROVIDE WALL CAP WITH INTEGRAL BACKDRAFT DAMPER.
3. FAN TO OPERATE OFF ROOMS LIGHT SWITCH, SEE ELECTRICAL DRAWING.
4. FAN SHALL BE INTEGRATED TO GAS DETECTION SYSTEM TO ACTIVATE BASED ON CO AND NO2 DETECTION.
5. PROVIDE WITH BIRDSCREEN AND GRAVITY BACKDRAFT DAMPER.
6. FAN TO OPERATE CONTINUOUSLY, SEE ELECTRICAL FOR WALL SWITCH LOCATION.

				ELECTRICAL						
MARK	MOUNTING	AIRFLOW (CFM)	ESP (IN W.C.)	VOLTAGE	PHASE	HZ	MOTOR HP	WEIGHT	MANUFACTURER	MODEL	NOTES
EF-1	CEILING	60	0.10	115 V	1	60	0.016	12 lb	GREENHECK	SP-A90	1,2,3
EF-2	CEILING	60	0.10	115 V	1	60	0.016	12 lb	GREENHECK	SP-A90	1,2,3
EF-3	CEILING	60	0.10	115 V	1	60	0.016	12 lb	GREENHECK	SP-A90	1,2,3
EF-4	CEILING	60	0.10	115 V	1	60	0.016	12 lb	GREENHECK	SP-A90	1,2,3
EF-5	CEILING	100	0.10	115 V	1	60	0.016	12 lb	GREENHECK	SP-A90	1,2,3
EF-6	WALL	275	0.15	115 V	1	60	0.1	29 lb	GREENHECK	CUE-070-VG	3,5,6
EF-7	WALL	275	0.15	115 V	1	60	0.1	29 lb	GREENHECK	CUE-070-VG	3,5,6
EF-8	WALL	6850	0.00	115 V	1	60	2	142 lb	GREENHECK	CUBE-220	4,5

LOUVER SCHEDULE

NOTES:
1. PROVIDE 3/4" MESH ALUMINUM BIRD SCREEN.
2. PROVIDE STANDARD MILL FINISH.
3. FRAME TYPE SHALL MATCH WALL CONSTRUCTION. COORDINDATE WITH ARCHITECT.
4. PROVIDE WITH MANUFACTURER'S BACKDRAFT DAMPER.
5. PROVIDE WITH OPTIONAL WELDED CONSTRUCTION PER THE LARGE MISSLE IMPACT TEST (ASTM E1996/TAS 201) AND THE CYCLIC WIND-LOADING TEST (TAS 203). QUALIFIED FOR WIND-LOADS UP TO 200 PSF.
6. PROVIDE WITH GREENHECK MODEL BR-42 BACKDRAFT DAMPER.

		SIZE		AIRFLOW	MIN. FREE	MAX	MAX APD			
MARK	SERVICE	WIDTH	HEIGHT	(CFM)	AREA	VELOCITY	(IN W.C.)	MANUFACTURER	MODEL	NOTES
L-1	EMERGENCY INTAKE	5' - 0"	5' - 0"	6890	13.8 ft²	500 FPM	0.07	GREENHECK	ESD-435X	1-6
L-2	GENERAL INTAKE	2' - 0"	2' - 0"	632	1.3 ft²	500 FPM	0.07	GREENHECK	ESD-435X	1-6

ELECTRIC FURNACE SCHEDULE

NOTES:
1. PROVIDE WITH MATCHED CASE COOLING COIL.
2. PROVIDE WALL MOUNTED THERMOSTAT BY UNIT MANUFACTURER.

				HEATING		ELECTRICAL						
MARK	AIRFLOW (CFM)	UNIT TYPE	ESP (IN W.C.)	EAT (°F)	INPUT KW	VOLTAGE	PHASE	HZ	MOTOR HP	MANUFACTURER	MODEL	NOTES
F-1	1400	ELECTRIC FURNACE	0.50	70.0	17.6	208 V	3	60	0.5	TBD	TBD	1,2
F-2	1200	ELECTRIC FURNACE	0.50	70.0	17.6	208 V	3	60	0.5	TBD	TBD	1,2

GRILLES, REGISTERS, & DIFFUSERS SCHEDULE

NOTES:
1. NECK SIZE SHOWN ON DRAWINGS. PROVIDE BRANCH DUCT TO MATCH NECK SIZE UNLESS OTHERWISE SHOWN ON DRAWINGS.
2. FRAME TO MATCH CEILING/WALL CONSTRUCTION, COORDINATE WITH ARCHITECTURAL REFLECTED CEILING/WALL PLAN.

MARK	MATERIAL	FACE TYPE	FACE SIZE	MARGIN	FINISH	MAX AIRFLOW	MAX APD (IN W.C.)	MAX NC	MANUFACTURER	MODEL	NOTES
CD-1	STEEL	LOUCERED	24"X24"	LAY-IN	WHITE	1000 CFM	0.10	30	TITUS	TMS	1,2
CD-2	STEEL	LOUCERED	12"X12"	LAY-IN	WHITE	250 CFM	0.10	30	TITUS	TMS	1,2
RG-1	STEEL	PERFORATED	24"X24"	LAY-IN	WHITE	2500 CFM	0.10	30	TITUS	PAR	1,2
TG-1	STEEL	PERFORATED	18"X18"	LAY-IN	WHITE	244 CFM	0.10	30	TITUS	PAR	1,2

COOLING COIL UNIT

NOTES:
1. CONTRACTOR SHALL VERIFY WITH EQUIPMENT SUPPLIER EXACT ROUTING AND SIZE OF INSULATED REFRIGERANT PIPING. INSTALL PER MANUFACTURERS RECOMMENDATIONS.
2. SELECT EQUIPMENT FOR ELEVATION OF 4500 FEET ABOVE SEA LEVEL.
3. ELECTRICAL CONTRACTOR TO PROVIDE DISCONNECT SWITCH FOR EVAPORATOR SECTION AND CONDENSING SECTION.
4. PROVIDE WITH FACTORY CONDENSATE PUMP. SHIPPED LOOSE, FIELD INSTALLED BY PLUMBING CONTRACTOR.

		COOLING COIL							
MARK	UNIT TYPE	AIRFLOW (CFM)	TOTAL CAP (TON)	EAT DB (°F)	EAT WB (°F)	ASSOCIATED UNIT	MANUFACTURER	MODEL	NOTES
CC-1	COOLING COIL	1400	3.0	80.0	67.0	CU-1, F-1	TBD	TBD	1-4
CC-2	COOLING COIL	1200	3.0	80.0	67.0	CU-2, F-1	TBD	TBD	1-4

MINI SPLIT - INDOOR CONDENSING UNIT

NOTES:
1. PROVIDE AND INSTALL MANUFACTURER'S PROGRAMMABLE THERMOSTAT AND REFRIGERATION LINESET.
2. SET FAN SPEED TO MEDIUM.
3. MAX 23 FEET ELEVATION ABOVE CONDENSER.

		SUPPLY FAN	COOLING COIL					
MARK	UNIT TYPE	AIRFLOW (CFM)	TOTAL CAP (MBH)	ASSOCIATED UNIT	WEIGHT	MANUFACTURER	MODEL	NOTES
FC-1	WALL MOUNT FAN COIL	400	7.0	CU-3	21.00 lbf	TBD	TBD	1-3

INFRARED TUBE HEATER SCHEDULE

NOTES:
1. MOUNT 13 FEET ABOVE FINISHED FLOOR WITHOUT OBSTRUCTING AIRFLOW.
2. PROVIDE WITH WALL MOUNTED THERMOSTAT.
3. PROVIDE NECESSARY MOUNTING BRACKET AND ACCESSORIES FOR HORIZONTAL MOUNTING.

		HEATING (GAS)	ELECTRICAL		BURNER			
MARK	LOCATION	MBH	VOLTAGE	HZ	WEIGHT	MANUFACTURER	MODEL	NOTES
H-1	APPARATUS BAY	40.0	120 V	60	19.00 lbf	ROBERTS GORDON	CORAYVAC B-4	1-3

Kimley»Horn

7900 RANCHARRAH PARKWAY
SUITE 100
RENO, NV 89511
PHONE: 775.787.7552

2023 ©

This document is an instrument of service prepared solely for Kimley-Horn's client and for a particular purpose. Any other use or reliance is without liability to Kimley-Horn.

SEALS

PRELIMINARY
FOR REVIEW ONLY
NOT FOR RECORDATION PURPOSES
Kimley»Horn
ENGINEER _____
PE NO. _____ DATE _____

WEST WENDOVER FIRE STATION #13

1121 N. GENE L. JONES WAY

CLIENT PROJECT INFO

NO:	DATE	DRAWING ISSUE DESCRIPTION

DESIGNED BY: AS
DRAWN BY: AS
CHECKED BY: MCM
SCALE:
DATE: 5/01/2023
PROJECT NO: 092767002
FILENAME:

MECHANICAL SCHEDULES

M002

5/2/2023 12:45:54 PM BIM 360://092767002-Wendover Fire Station/Wendover FS M&P.rvt

MECHANICAL VENTILATION CALCULATION

BAY AREA:	9084 FT²
EXHAUST RATE PER 2020 FBC SECTION 404.1[A]:	0.75 CFM/FT²
REQUIRED VENTILATION:	6813 CFM
PROPOSED VENTILATION:	6850 CFM
MIN. CONTINUOUS VENTILATION:	.06 CFM/FT²
REQUIRED VENTILATION:	545 CFM
PROPOSED VENTILATION:	550 CFM

A: EXHAUST RATE APPLIES UPON DETECTION OF CO OR NO_2 IN THE AREA.

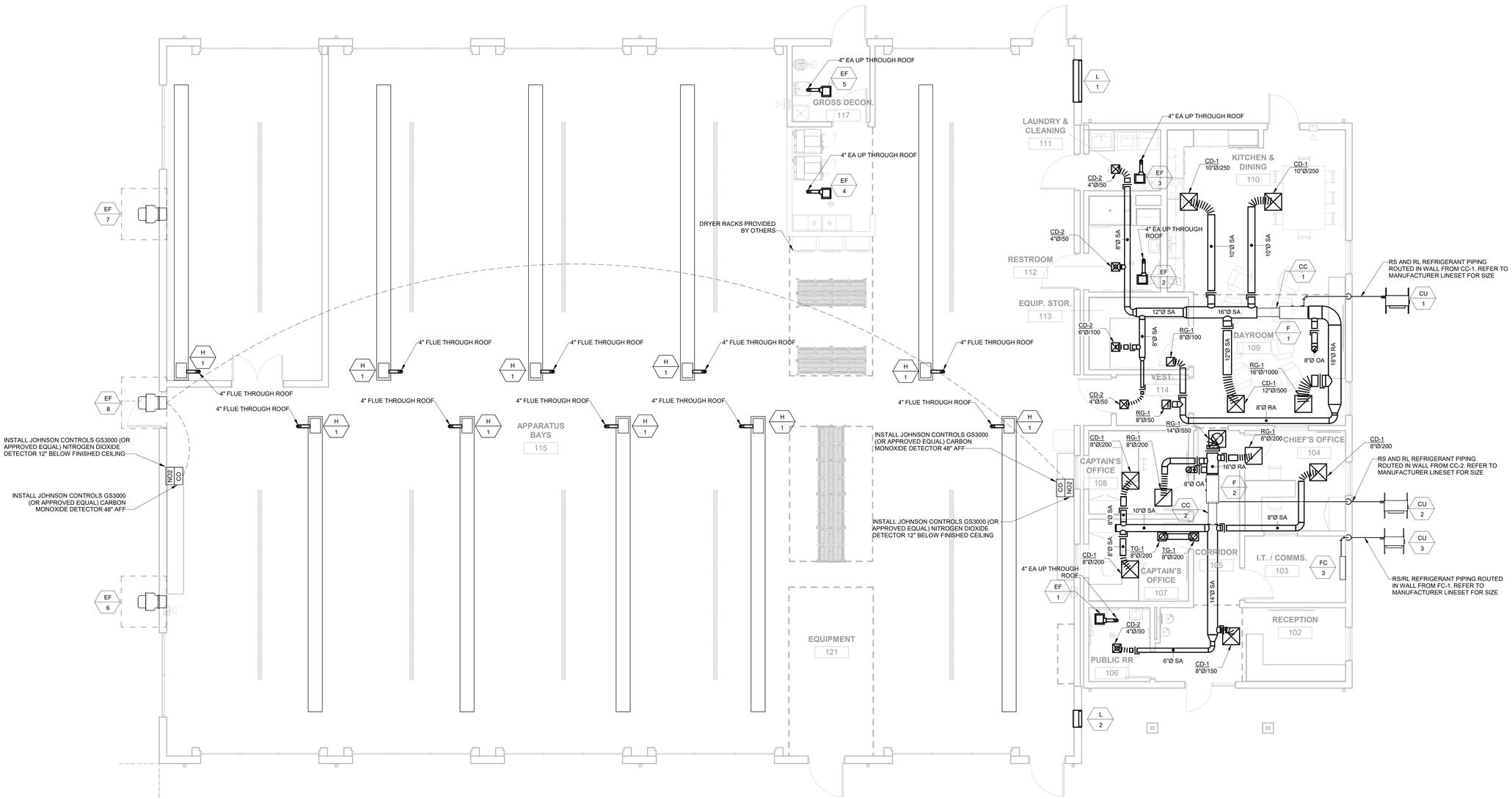

1 MECHANICAL FLOOR PLAN

3/16" = 1'-0"

Kimley»Horn

7900 RANCHARRAH PARKWAY
SUITE 100
RENO, NV 89511
PHONE: 775.787.7552

2023 ©

This document is an instrument of service prepared solely for Kimley-Horn's client and for a particular purpose. Any other use or reliance is without liability to Kimley-Horn.

SEALS

PRELIMINARY
FOR REVIEW ONLY
NOT FOR RECORDATION PURPOSES
Kimley»Horn
ENGINEER _____
PE NO. _____ DATE _____

WEST WENDOVER FIRE STATION #13

1121 N. GENE L. JONES WAY

CLIENT PROJECT INFO

NO:	DATE	DRAWING ISSUE DESCRIPTION

DESIGNED BY: AS
DRAWN BY: AS
CHECKED BY: MCM
SCALE: 3/16" = 1'-0"
DATE: 5/01/2023
PROJECT NO: 092767002
FILENAME:

MECHANICAL FLOOR PLAN

M200

5/2/2023 12:45:57 PM BIM 360://092767002-Wendover Fire Station/Wendover FS M&P.rvt

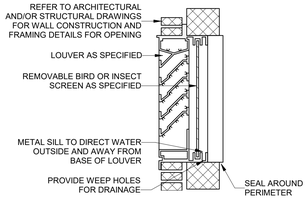

NOTES:

1. SEAL ALL JOINTS AND SEAMS OF PLENUM AND DUCT TO PROVIDE WATER TIGHT CONSTRUCTION. PROVIDE INSULATION FOR PLENUM AND DUCT PER SPECIFICATIONS.

1 LOUVER INSTALLATION DETAIL

N.T.S

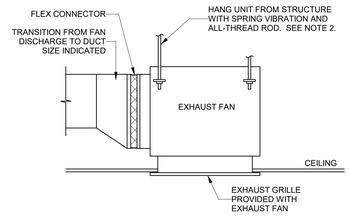

NOTES:

1. ARRANGEMENT SHOWN IS SCHEMATIC, ADJUST TO SUIT FIELD CONDITIONS AND MEET LOCAL CODE REQUIREMENTS.
2. FOR FANS 1 HP AND LESS, PROVIDE NEOPRENE RUBBER MOUNT HANGER. FOR FANS LARGER THAN 1 HP, PROVIDE SPRING VIBRATION ISOLATION HANGER.

2 CEILING MOUNTED FAN DETAIL

N.T.S

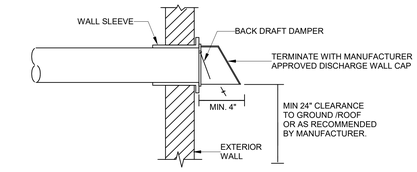

NOTES:

1. DRYER EXHAUST TERMINATIONS SHALL BE IN ACCORDANCE WITH THE APPLIANCE MANUFACTURER'S INSTALLATION INSTRUCTIONS.
2. DAMPERS OR ANY OTHER OBSTRUCTIONS ARE NOT PERMITTED IN DRYER VENT DUCT.
3. SCREENS SHALL NOT BE INSTALLED AT THE DUCT TERMINATION.
4. ALL DRYER EXHAUST DUCTWORK SHALL BE SMOOTH INSIDE WITH NO PROJECTIONS FROM SHEET METAL SCREWS OR OTHER OBSTRUCTIONS.

3 DRYER EXHAUST VENT DETAIL

N.T.S

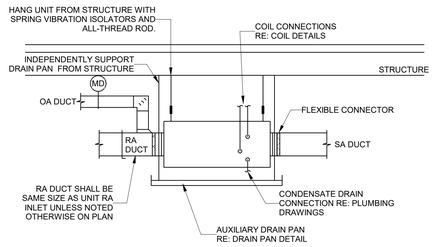

NOTES:

1. ARRANGEMENT SHOWN IS SCHEMATIC, ADJUST TO SUIT FIELD CONDITIONS AND MEET LOCAL CODE REQUIREMENTS.

4 HORIZONTAL FCU DETAIL

N.T.S

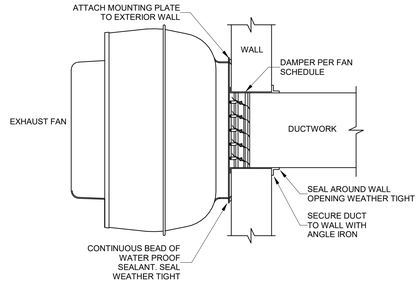

5 SIDEWALL CENTRIFUGAL EXHAUST FAN

N.T.S

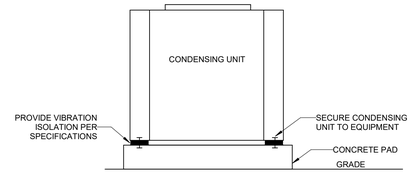

NOTES:

1. SUPPORT AND ANCHOR OUTDOOR UNITS IN COMPLIANCE WITH LOCAL SEISMIC AND WIND RESTRAINT REQUIREMENTS.
2. SEE MECHANICAL EQUIPMENT ANCHORS AND SUPPORT SPECIFICATIONS FOR ADDITIONAL REQUIREMENTS.

6 CONDENSING UNIT GROUND SUPPORT DETAIL

N.T.S

Kimley»Horn

7900 RANCHARRAH PARKWAY
SUITE 100
RENO, NV 89511
PHONE: 775.787.7552
2023 ©

This document is an instrument of service prepared solely for Kimley-Horn's client and for a particular purpose. Any other use or reliance is without liability to Kimley-Horn.

SEALS

PRELIMINARY
FOR REVIEW ONLY
NOT FOR RECORDATION PURPOSES
Kimley»Horn
ENGINEER _____
PE NO. _____ DATE _____

WEST WENDOVER FIRE STATION #13

1121 N. GENE L. JONES WAY

CLIENT PROJECT INFO

NO:	DATE	DRAWING ISSUE DESCRIPTION

DESIGNED BY: AS
DRAWN BY: AS
CHECKED BY: MCM
SCALE: 12" = 1'-0"
DATE: 5/01/2023
PROJECT NO: 092767002
FILENAME:

MECHANICAL DETAILS

M600

5/2/2023 12:45:57 PM BIM 360://092767002-Wendover Fire Station/Wendover FS MEP.rvt

PLUMBING GENERAL NOTES:

1. DRAWINGS ARE DIAGRAMMATIC ONLY AND REPRESENT THE GENERAL SCOPE OF THE WORK. REVIEW THE GENERAL NOTES, SPECIFICATIONS AND PLANS FOR ADDITIONAL REQUIREMENTS THAT MAY NOT BE SPECIFICALLY CALLED OUT IN THIS PORTION OF THE CONSTRUCTION DOCUMENTS. NOTIFY THE ARCHITECT AND ENGINEER ON RECORD OF ANY CONFLICTS OR DISCREPANCIES PRIOR TO SUBMISSION OF BID.
2. ALL WORK SHALL BE IN ACCORDANCE WITH THE 2018 INTERNATIONAL PLUMBING CODE (IPC), 2018 INTERNATIONAL ENERGY CONSERVATION CODE (IECC), 2018 INTERNATIONAL BUILDING CODE (IBS), 2018 INTERNATIONAL MECHANICAL CODE (IMC), NATIONAL FIRE PROTECTION ASSOCIATION (NFPA) STANDARDS, AND ALL OTHER APPLICABLE CODES, RULES, AND CITY OF WENDOVER AMENDMENTS.
3. GUARANTEE MATERIAL, EQUIPMENT, AND INSTALLATION FOR ONE YEAR FROM SUBSTANTIAL COMPLETION DATE. ALL DEFECTS SHALL BE CONTRACTORS RESPONSIBILITY.
4. PROVIDE A CONSTRUCTION RECORD SET OF "AS-BUILT" DOCUMENTS TO THE ARCHITECT AND ENGINEER ON RECORD REFLECTING ANY VARIANCES OF INSTALLED PIPING LOCATIONS OR EQUIPMENT CONTRARY TO THE CONSTRUCTION DOCUMENTS, REFER TO SPECIFICATIONS.
5. PROVIDE TO THE ARCHITECT AND ENGINEER ON RECORD A COPY OF INSPECTION REPORTS AND APPROVAL CERTIFICATES FROM LOCAL AND STATE INSPECTIONS, REFER TO SPECIFICATIONS.
6. INSTALLATION SHALL COMPLY WITH LEGALLY CONSTITUTED CODES AND THE REQUIREMENTS OF AUTHORITIES HAVING JURISDICTION.
7. PLANS AND SPECIFICATIONS GOVERN WHERE THEY EXCEED CODE REQUIREMENTS.
8. REFER TO ARCHITECTURAL PLANS FOR EXACT LOCATION AND MOUNTING HEIGHTS OF PLUMBING FIXTURES.
9. DO NOT SCALE FLOOR PLANS FOR EXACT HORIZONTAL LOCATION OF PIPE ROUTING.
10. INSTALL CONCEALED PIPING TIGHT TO THE STRUCTURE AND AS HIGH AS POSSIBLE. INSTALL EXPOSED PIPING TIGHT TO THE STRUCTURE, WALL OR CEILING AND AS HIGH AS POSSIBLE. COORDINATE WITH OTHER TRADES TO AVOID CONFLICTS.
11. INSTALL VALVES AND APPURTENANCES A MAXIMUM OF 24" ABOVE CEILING IN ACCESSIBLE LOCATION WITHIN 24" OF ACCESS DOORS OR ACCESSIBLE CEILING TILES. PROVIDE PIPE AND FITTINGS TO INSTALL VALVES AND APPURTENANCES AT REQUIRED HEIGHT AND WITHIN 24" OF ACCESS DOORS OR ACCESSIBLE CEILING TILES.
12. VALVES SHALL BE LINE SIZE UNLESS OTHERWISE NOTED.
13. PIPING IN FINISHED AREAS SHALL BE ROUTED CONCEALED; EXPOSED PIPING, WHERE NECESSARY, SHALL BE ROUTED AS HIGH AS POSSIBLE AND TIGHT TO WALLS.
14. VERIFY LOCATION AND DEPTH OF UTILITIES AT POINTS OF CONNECTION BEFORE START OF PIPING INSTALLATION.
15. COORDINATE ALL WORK WITH OTHER TRADES AND CONTRACTORS.
16. COORDINATE PIPING INSTALLATION WITH STRUCTURAL GRADE BEAMS, FOOTINGS, COLUMN PIERS, ETC. SLEEVE PIPING THROUGH GRADE BEAMS, FOOTING, ETC. WHERE REQUIRED AND AS NOTED ON PLANS. COORDINATE SLEEVE INSTALLATIONS WITH THE ARCHITECT, STRUCTURAL ENGINEER, STRUCTURAL CONTRACTOR AND GENERAL CONTRACTOR BEFORE CONCRETE IS INSTALLED.
17. CLEAN FAUCET AERATORS AND PIPE STRAINERS PRIOR TO TURNING BUILDING OVER TO THE OWNER.
18. COORDINATE PIPE ROUTING AWAY FROM ELECTRICAL PANELS. DO NOT INSTALL PIPING OVER ELECTRICAL PANELS.
19. PAINT ALL EXPOSED GAS AND WATER PIPING USING RUST INHIBITOR PAINT. PAINT AND COLOR SHALL BE COORDINATED WITH THE ARCHITECT AND / OR OWNER.
20. COORDINATE ALL ROOF PENETRATIONS WITH OTHER TRADES. MAINTAIN 10' MINIMUM CLEARANCE FROM ALL AIR INTAKES. MAINTAIN 2' CLEARANCE FROM ALL OTHER EQUIPMENT.
21. INSULATE PIPING ROUTED IN EXTERIOR BUILDING WALLS WITH MINIMUM 2" BATT INSULATION TO PREVENT FREEZING.
22. PROVIDE "HEAVY-DUTY" NO-HUB COUPLINGS ON SANITARY PIPING 3" AND LARGER. SEE DIVISION 22 SPECIFICATION SECTION "SANITARY DRAINAGE AND VENT AND PIPING SPECIALTIES" FOR MORE INFORMATION.
23. PROVIDE "HEAVY-DUTY" NO-HUB COUPLINGS ON STORM PIPING, INCLUDING CONNECTIONS TO ROOF DRAINS. SEE DIVISION 22 SPECIFICATION SECTION "STORM DRAINAGE PIPING AND SPECIALTIES" FOR MORE INFORMATION.
24. PROVIDE TRANSITION ADAPTER COUPLINGS FOR CONNECTION OF PVC DWV TO CAST IRON SANITARY, WASTE AND VENT PIPE AT SLAB ON GRADE. SEE DIVISION 22 SPECIFICATION SECTION "SANITARY DRAINAGE AND VENT PIPING AND SPECIALTIES" FOR MORE INFORMATION.
25. PROVIDE TRANSITION ADAPTER COUPLINGS FOR CONNECTION OF PVC DWV TO CAST IRON STORM PIPE AT SLAB ON GRADE. SEE DIVISION 22 SPECIFICATION SECTION "STORM DRAINAGE PIPING AND SPECIALTIES" FOR MORE INFORMATION.
26. FLOW CONTROL VALVES SHALL BE SIZE 1/2" AND SET AT 0.5 GPM UNLESS NOTED OTHERWISE.
27. WATER HAMMER ARRESTORS SHALL BE SIZE "A" UNLESS NOTED OTHERWISE.
28. PROVIDE CHECK VALVES IN HOT AND COLD WATER SUPPLIES FOR MOP SINK FAUCETS DOWNSTREAM OF SHUTOFF VALVES.
29. PROVIDE STACK SLEEVES AT PIPING PENETATIONS OF ELEVATED WATERPROOF FLOOR SLABS, REFER TO SPECIFICATIONS.
30. PROVIDE WALL PIPES AT PIPING PENETRATIONS OF ELEVATED WATERPROOF FLOOR SLABS, REFER TO SPECIFICATIONS.
31. PROVIDE DIELECTRIC UNIONS ON ALL CONNECTION BETWEEN DISSIMILAR METALS.
32. FLUSH AND DISINFECT ALL POTABLE WATER SYSTEMS AFTER FINAL INSTALLTION AND PRIOR TO BUILDING OCCUPANCY PER PLUMBING CODE.
33. ALL PENETRATIONS THROUGH RATED WALLS AND FLOORS SHALL BE SEALED WITH A MATERIAL CAPABLE OF PREVENTING THE PASSAGE OF FLAMES AND HOT GASES. MATERIALS SHALL BE UL LISTED AND COMPLY WITH PLUMBING CODE.
34. CALL FOR INSPECTION AND TEST FROM AUTHORITY HAVING JURISDICTION OF ALL WASTE PIPE, WATER PIPE, AND NATURAL GAS PIPE PRIOR TO BACKFILL AND COVER PER PLUMBING CODE.
35. PROVIDE THIRD PARTY TESTING AND CERTIFICATION OF ALL NATURAL GAS PIPE AND FITTINGS PER FUEL GAS CODE.
36. PROVIDE SIZE AND LENGTH OF HOT WATER FIXTURE SUPPLY PIPE FROM CIRCULATED HOT WATER BRANCH OR MAIN TO TERMINATION OF HOT WATER FIXTURE SUPPLY PIPE AT EACH FIXTURE PER 2015 INTERNATIONAL ENERGY CONSERVATION CODE, TABLE C404.3.1. FOR ½" HOT WATER FIXTURE SUPPLY PIPE SIZE TO INDIVIDUAL LAVATORIES, PROVIDE MAXIMUM LENGTH OF TWO FEET. FOR ½" HOT WATER FIXTURE SUPPLY PIPE SIZE TO INDIVIDUAL SINKS, PROVIDE MAXIMUM LENGTH OF 43 FEET. FOR 3/4" HOT WATER FIXTURE SUPPLY PIPE SIZE TO INDIVIDUAL SINKS, PROVIDE MAXIMUM LENGTH OF 21 FEET.

PLUMBING SYMBOLS & LEGENDS

THIS IS A MASTER LEGEND, NOT ALL ABBREVIATIONS OR SYMBOLS ARE USED ON DRAWINGS.

STANDARD MOUNTING ELEVATIONS

INSTALL PLUMBING FIXTURES AT ELEVATIONS IN DRAWINGS OR SPECIFICATIONS. ELEVATIONS ARE DIMENSIONED FROM AFF OR AFG. INSTALL ALL DEVICES IN COMPLIANCE WITH CURRENT ADA AND LOCAL REQUIREMENTS.

REFER TO ARCHIECTURAL DRAWINGS FOR FINAL LOCATIONS AND MOUNTING ELEVATIONS.

PIPING SYMBOLS & LEGENDS

SYMBOL	DESCRIPTION
	DIRECTION OF FLOW
	FLOOR SINK (FS) OR FLOOR DRAIN (FD), SIZE AND TYPE
	SHUTOFF VALVE (SOV)
	BALANCING VALVE WITH PRESSURE PORTS (BLV)
	CHECK VALVE (CHV)
	BACKFLOW PREVENTOR (BP)
	PRESSURE REDUCING VALVE (PRV)
	STRAINER (STR)
	STRAINER WITH 3/4" HOSE END DRAIN VALVE
	2-WAY CONTROL VALVE
	3-WAY CONTROL VALVE
	REDUCER
	WATER HAMMER ARRESTOR
	UNION
	PRESSURE GAGE WITH GAUGE COCK
	THERMOMETER
	PIPING TEE DOWN
	PIPING TEE UP
	PIPING ELBOW UP
	PIPING ELBOW DOWN
	CAP
	FLEXIBLE COUPLING
	PUMP

ABBREVIATIONS

ABBREVIATION	DESCRIPTION
ADA	AMERICANS WITH DISABILITIES ACT
AFF	ABOVE FINISHED FLOOR
AP	ACCESS PANEL
AV	ACID VENT
AW	ACID WASTE
BFP	BACKFLOW PREVENTER
BFF	BELOW FINISHED FLOOR
BHP	BRAKE HORSE POWER
BOP	BOTTOM OF PIPE
BTU/H	BRITISH THERMAL UNIT PER HOUR
CD	CONDENSATE DRAIN
CO	CLEANOUT
CP	CONDENSATE PYMP
CPVC	CHLORINATED POLYVINLY CHLORIDE
CU	COPPER
(D)	DEMOLISHED
DI	DUCTILE IRON
DIA	DIAMETER
DFU	DRAINAGE FIXTURE UNIT
DN	DOWN
(E)	EXISTING
ECO	EXTERIOR CLEANOUT
EFF	EFFICIENCY
EWC	ELECTRIC WATER COOLER
EWT	ENTERING WATER TEMPERATURE
°F	DEGREES FAHRENHEIT
FCO	FLOOR CLEANOUT
FD	FLOOR DRAIN
FPM	FEET PER MINUTE
GA	GAGE OR GAUGE
GAL	GALLONS
GI	GREASE INTERCEPTOR
GPF	GALLONS PER FLUSH
GPM	GALLONS PER MINUTE
HD	HEAD, HUB DRAIN
HP	HORSEPOWER
IBC	INTERNATIONAL BUILDING CODE
IE	INVERT ELEVATION
IPC	INTERNATIONAL PLUMBING CODE
KW	KILOWATT
L	LAVATORY OR SINK
LBS	POUNDS
LWT	LEAVING WATER TEMPERATURE
MAX	MAXIMUM
MBH	ONE THOUSAND BTUH
MCA	MINIMUM CIRCUIT AMPS
MH	MANHOLE
MIN	MINIMUM
MOCP	MAXIMUM OVER CURRENT PROTECTION
N/A	NOT APPLICABLE
N/C	NORMALLY CLOSED
N/O	NORMALLY OPEN
NEC	NATIONAL ELECTRIC CODE
NFPA	NATIONAL FIRE PROTECTION ASSOCIATION
NIC	NOT IN CONTRACT
NTS	NOT TO SCALE
OFCI	OWNER FURNISHED, CONTRACTOR INSTALLED
PD	PRESSURE DROP
PRV	PRESSURE REDUCING VALVE
PSI	POUNDS PER SQUARE INCH
PVC	POLYVINYL CHLORIDE
(R)	EXISTING TO BE RELOCATED
RD	ROOF DRAIN
RPM	REVOLUTIONS PER MINUTE
SK	SINK
SOI	SAND OIL INTERCEPTOR
SP	SUMP PUMP
SS	STAINLESS STEEL
TDH	TOTAL DYNAMIC HEAD
TFA	TO FLOOR ABOVE
TFB	TO FLOOR BELOW
UBC	UNIFORM BUILDING CODE
UL	UNDERWRITERS LABORATORIES, INC.
UMC	UNIFORM MECHANICAL CODE
UNO	UNLESS NOTED OTHERWISE
UPC	UNIFORM PLUMBING CODE
V	VENT
VFD	VARIABLE FREQUENCY DRIVE
VTR	VENT THROUGH ROOF
W/	WTH
W/O	WITHOUT
WC	WATER COLUMN
WCO	WALL CLEANOUT
WG	WATER GAUGE
WSFU	WATER SUPPLY FIXTURE UNIT
WVS	WASTE VENT STACK

PIPING LINETYPES

SYMBOL	DESCRIPTION
—CD—	CONDENSATE DRAIN PIPING (CD)
—CW—	COLD WATER (CW)
—HW—	DOMESTIC HOT WATER (HW)
—HWR—	DOMESTIC HOT WATER RETURN (HWC)
—G—	GAS - LOW PRESSURE (G) (7" WC AND BELOW)
—MPG—	GAS - MEDIUM PRESSURE (MPG) (2-5 PSI)
—GW—	GREASE WASTER (ABOVE GRADE/FLOOR) (GW)
—GW—	GREASE WASTE (BELOW GRADE/FLOOR) (GW)
—W—	WASTE PIPING (ABOVE GRADE/FLOOR) (W)
—W—	WASTE PIPING (BELOW GRADE/FLOOR) (W)
—ST—	STORM/ROOF DRAIN PIPING (BELOW GRADE/ FLOOR)
—ST—	STORM/ROOF DRAIN PIPING (ABOVE GRADE/FLOOR)
—STS—	SECONDARY STORM/ROOF DRAIN PIPING (BELOW GRADE/FLOOR)
—STS—	SECONDARY STORM/ROOF DRAIN PIPING (ABOVE GRADE/FLOOR)
—TW—	TEPID WATER
—TWC—	TEPID WATER CIRCULATION
—TP—	TRAP PRIMER WATER PIPING
—V—	VENT PIPING (ABOVE GRADE/FLOOR)
—VBG—	VENT BELOW GRADE PIPING

GENERAL ANNOTATIONS

	POINT OF CONNECTION (POC) - NEW ITEMS TO EXISTING ITEMS
	ACCESS PANEL (AP)
RTU X	MECHANICAL EQUIPMENT. (CONTRACTOR FURNISHED & INSTALLED UNLESS NOTED OTHERWISE). REFER TO MECHANICAL SCHEDULES.
1	PLUMBING PLAN KEYNOTE
1	PLUMBING EQUIPMENT. (CONTRACTOR FURNISHED & INSTALLED). REFER TO PLUMBING MATERIAL LIST.
1	PLUMBING EQUIPMENT. (OWNER FURNISHED, CONTRACTOR INSTALLED).
1 P0.00	DETAIL REFERENCE CALLOUT. UPPER VALUE = DETAIL NUMBER. LOWER VALUE = SHEET NUMBER
1 P0.00	SECTION VIEW REFERENCE CALLOUT. UPPER VALUE = DETAIL NUMBER. LOWER VALUE = SHEET NUMBER

PLUMBING SHEET LIST

SHEET NUMBER	SHEET NAME
P000	PLUMBING SYMBOLS, ABBREVIATIONS, AND NOTES
P002	PLUMBING SCHEDULES
P200	PLUMBING FLOOR PLAN

Kimley»Horn

7900 RANCHARRAH PARKWAY
SUITE 100
RENO, NV 89511
PHONE: 775.787.7552

2023 ©

This document is an instrument of service prepared solely for Kimley-Horn's client and for a particular purpose. Any other use or reliance is without liability to Kimley-Horn.

SEALS

PRELIMINARY
FOR REVIEW ONLY
NOT FOR RECORDATION PURPOSES
Kimley»Horn
ENGINEER _____
PE NO. _____ DATE _____

WEST WENDOVER FIRE STATION #13

1121 N. GENE L. JONES WAY

CLIENT PROJECT INFO

NO:	DATE	DRAWING ISSUE DESCRIPTION

DESIGNED BY: AS
DRAWN BY: AS
CHECKED BY: MCM
SCALE: As indicated
DATE: 5/01/2023
PROJECT NO: 092767002
FILENAME:

PLUMBING SYMBOLS, ABBREVIATIONS, AND NOTES

P000

5/2/2023 12:45:57 PM BIM 360://092767002-Wendover Fire Station/Wendover FS MEP.rvt

PLUMBING FIXTURE SCHEDULE

MARK	FIXTURE TYPE	DESCRIPTION	MANUFACTURER	MODEL	ROUGH-IN SIZE			
					W	V	CW	HW
EE-1	EMERGENCY EYE WASH	COMBINATION EMERGENCY SHOWER AND EYEWASH. PROVIDE WITH 11" STAINLESS STEEL BOWL, INTEGRAL 20 GPM FLOW CONTROL, MODEL SP157A SCALD BLEED VALVE, MODEL 92011E THERMOSTATIC MIXING VALVE, AND STAINLESS STEEL DUST COVER.	HAWS	8300	0"	0"	1 1/4"	1 1/4"
EWC-1	ELECTRIC WATER COOLER	BI-LEVEL, BARRIER-FREE, WALL MOUNTED REFRIGERATED WATER COOLER WITH SELF-CLOSING EASY-TOUCH CONTROLS REQUIRING LESS THAN 3 POUNDS OF FORCE TO OPERATE. UNIT SHALL PROVIDE 8.0 GPH OF 50°F WATER WITH 80°F ENTERING WATER AND 90°F AMBIENT. PROVIDE AND INSTALL MANUFACTURERS CANE SKIRT. PROVIDE COMPLETE WITH MOUNTING PLATE, STOP, SUPPLY, TRAP, CANE SKIRT, AND BOTTLE FILLER (MODEL NO. LZWSR).	ELKAY	LZSTL8WSLP - LHHS	2"	1 1/2"	1/2"	0"
FCO-1	FLOOR CLEANOUT	FLOOR CLEANOUT, REFER TO PLANS FOR SIZE. LOCATE IN ACCESSIBLE AREA. TUF-TOP NON-ADJUSTABLE CLEANOUT WITH DURA-COATED CAST IRON BODY, WITH GAS AND WATERTIGHT ABS TAPERED THREAD PLUG, AND ROUND SCORIATED CAST IRON HEAVY-DUTY SECURED COVER AND FRAME.	WATTS	CO-202-RC	2"	0"	0"	0"
FD-1	4" FLOOR DRAIN	CAST IRON BODY FLOOR DRAIN.	ZURN	Z415	4"	2"	0"	0"
HB-1	HOSE BIBB	EXPOSED HOSE BIBB, MILD CLIMATE, ANTI-SIPHON, CHROME PLATED.	WOODFORD	79	0"	0"	3/4"	0"
HB-2	HOSE BIBB	UNDER COVER WALL HYDRANT, ANIT SIPHON, CHROME PLATED. PROVIDE WITH INTEGRAL DOUBLE CHECK BACKFLOW PREVENTER AND LOOSE TEE KEY AND DOOR LOCK.	WOODFORD	68	0"	0"	3/4"	0"
L-1	LAVATORY	21"X20 1/4" SELF DRAINING DECK 4" CENTERS WALL MOUNTED LAVATORY, PROVIDE WITH AMERICAN STANDARD FAUCET MODEL 6053.204. FACUET TO BE 0.35 GPM, BATTERY OPERATED SENSOR WITH ESTIMATED LIFE CYCLES OF 480,000 AND OPTIONAL THERMOSTATIC MIXING VALVE MODEL 605TXMV1070. ADA COMPLIENT WHEN INSTALLED PER MANUFACTURERS ADA REQUIREMENTS.	AMERICAN STANDARD	DECORUM 9134004EC	1 1/2"	1 1/2"	1/2"	1/2"
MS-1	MOP SINK	FLOOR MOUNTED 24"X24"X10" DEEP MOP SINK. ONE PIECE MOLDED STRUCTURAL FIBERGLASS CONSTRUCTION WITH MARBELIZED WHITE FINISH. PROVIDE WITH FAUCET (MODEL 63.600A), 31" HOSE AND HOSE HOLDER (MODEL 830AA), MOP HANGER (889CC), BUMPER GUARDS, AND WALL GUARDS. PROVIDE MOP SINK WITH 3" INTEGRAL DRAIN WITH REMOVEABLE STAINLESS STEEL STRAINER.	FIAT	MSB-2424	2"	2"	1/2"	1/2"
MS-2	MOP SINK	FLOOR MOUNTED 23"X21-1/2 SINGLE BOWL LAUNDRY TUB WITH WHITE BAKED ENAMEL STEEL LEGS, STRAINER, AND PLUG. PROVIDE WITH CHICAGO FAUCETS 895 SERIES DECK MOUNTED SINK FAUCET.	FIAT	FL1	2"	2"	1/2"	1/2"
SK-1	SINK - SINGLE BOWL	20 GAUGE 304 STAINLESS STEEL SINGLE BOWL DROPIN SINK, 21-1/4" X 15-3/4" X 8" DEEP. BARRIER FREE ADA COMPLIANT, 27" MINIMUM CABINET SIZE. PROVIDE WITH 3-HOLE PUNCH CONFIGURATION ON 4" CENTERS. PROVIDE 1.5 GPM FAUCET, BRASS SWIVEL SPOUT (MODEL NO. 7074000.075). PROVIDE ASSE 1070 COMPLIANT THERMOSTATIC MIXING VALVE, TRUEBRO LAVGUARDS, 1-1/2" CHROME PLATED P-TRAP, GRID STRAINER, LEAD FREE QUARTER TURN VALVES, AND FLEXIBLE SUPPLY LINES.	AMERICAN STANDARD	20SB.8252283S.075	2"	1 1/2"	1/2"	1/2"
SK-2	SINK - DOUBLE BOWL	120 GAUGE STAINSS STEEL DOUBLE BOWL DROP-IN SINK, 33" X 22" X 8" DEEP. BARRIER FREE ADA COMPLIANT, 36" MINIMUM CABINET SIZE. PROVIDE WITH 3-HOLE PUNCH CONFIGURATION ON 4" CENTERS. PROVIDE 1.5 GPM FAUCET WITH 8" FIXED CENTERS, BRASS SWIVEL SPOUT (MODEL NO. 707400.075). PROVIDE ASSE 1070 COMPLIANT THERMOSTATIC MIXING VALVE, TRUEBRO LAVGUARDS, 1-1/2" CHROME PLATED P-TRAP, GRID STRAINER, LEAD FREE QUARTER TURN VALVES, AND FLEXIBLE SUPPLY LINES.	AMERICAN STANDARD	22DB.6332283S.075	2"	1 1/2"	1/2"	1/2"
SOI-1	SAND/OIL INTERCEPTOR	SAND-OIL INTERCEPTOR, 320 GALLON, 2 COMPARTMENT CONCRETE STRUCTURE. PROVIDE WITH #4 H20 TRAFFIC RATED, 26" X 26" AIR TIGHT DIAMOND FLOOR PLATE COVER, FABRICATED STEEL FRAME, AND SURFACE INLET GRATE 26" X 26" WITH FABRICATED STEEL FRAME.	JENSEN	JP320EE-SO	4"	2"	0"	0"
TD-1	TRENCH DRAINS	6-3/4" WIDE REVEAL TRENCH DRAIN SYSTEM WITH HEAVY-DUTY FRAME ASSEMBLY. DUCTILE IRON CLASS C GRATE.	ZURN	Z886-HD	4"	0"	0"	0"
TP-1	TRAP PRIMER	115V POWERED ELECTRIC TRAP PRIMER.	PRECISION PLUMBING PRODUCTS	MP-500-115V	0"	0"	1/2"	0"
UB-1	UTILITY WATER BOX	LOW LEAD SQUARE 1/4 TURN COPPER UTIITY BOX WITH OPTIONAL WATER HAMMER	OATEY COMPANY	39156	0"	0"	1/2"	0"
WC-1	WATER CLOSET - FLUSH VALVE	WALL MOUNTED WATER CLOSET, HIGH EFFICIENCY 1.28 GPF, ELONGATED BOWL, VITREOUS CHINA, TOP SPUD. PROVIDE WITH AMERICAN STANDARD 1.28 GPF BATTERY-POWERED SENSOR-OPERATED SELECTRONIC FLUSHOMETER VALVE (MODEL NO. 6065.121.002) AND HEAY DUTY OPEN FRONT SEAT (MODEL NO. 5901.100). PROVIDE WITH J. R. SMITH FLOOR MOUNTED CARRIER.	AMERICAN STANDARD	AFWALL FLOWISE 2257.101	4"	2"	1 1/2"	0"
WCO-1	WALL CLEANOUT	WALL CLEANOUT, REFER TO PLANS FOR SIZE. LOCATE IN ACCESSIBLE AREA. DURA-COATED CAST IRON BODY, WITH GAS AND WATERTIGHT ABS TAPERED THREAD PLUG, AND ROUND SMOOTH STAINLESS STEEL ACCESS COVER WITH SECURING SCREW.	WATTS	CO44	0"	0"	0"	0"

TANKLESS WATER HEATER SCHEDULE

MARK	LOCATION	EQUIPMENT TYPE	MIN GPM FOR TEMP RISE	TEMPERATURE RISE (°F)	ELECTRICAL							MANUFACTURER	MODEL	NOTES
					INPUT (W)	NUMBER OF ELEMENTS	ELEMENT WATTAGE (W)	VOLTAGE	PHASE	HZ	FLA			
WH-1	PUBLIC RR 106	TANKLESS	0.35	59 °F	3000.0	1	3000.0	208 V	1	60 Hz	15	EEMAX	SPEX3208T	

GAS WATER HEATER SCHEDULE

MARK	LOCATION	EQUIPMENT TYPE	RECOVERY CAP.	TEMPERATURE RISE (°F)	INPUT MBH	ELECTRICAL			MANUFACTURER	MODEL	NOTES
						VOLTAGE	PHASE	HZ			
WH-2	DECON	TANK TYPE - GAS	512 GPH	90 °F	399.0	208 V	1	60 Hz	STATE	SUF119 400	

Kimley»Horn

7900 RANCHARRAH PARKWAY
SUITE 100
RENO, NV 89511
PHONE: 775.787.7552

2023 ©

This document is an instrument of service prepared solely for Kimley-Horn's client and for a particular purpose. Any other use or reliance is without liability to Kimley-Horn.

SEALS

PRELIMINARY
FOR REVIEW ONLY
NOT FOR RECORDATION PURPOSES
Kimley»Horn
ENGINEER _____
PE NO. _____ DATE _____

WEST WENDOVER FIRE STATION #13

1121 N. GENE L. JONES WAY

CLIENT PROJECT INFO

NO:	DATE	DRAWING ISSUE DESCRIPTION

DESIGNED BY: AS
DRAWN BY: AS
CHECKED BY: MCM
SCALE:
DATE: 5/01/2023
PROJECT NO: 092767002
FILENAME:

PLUMBING SCHEDULES

P002

5/2/2023 12:45:57 PM BIM 360://092767002-Wendover Fire Station/Wendover FS MEP.rvt

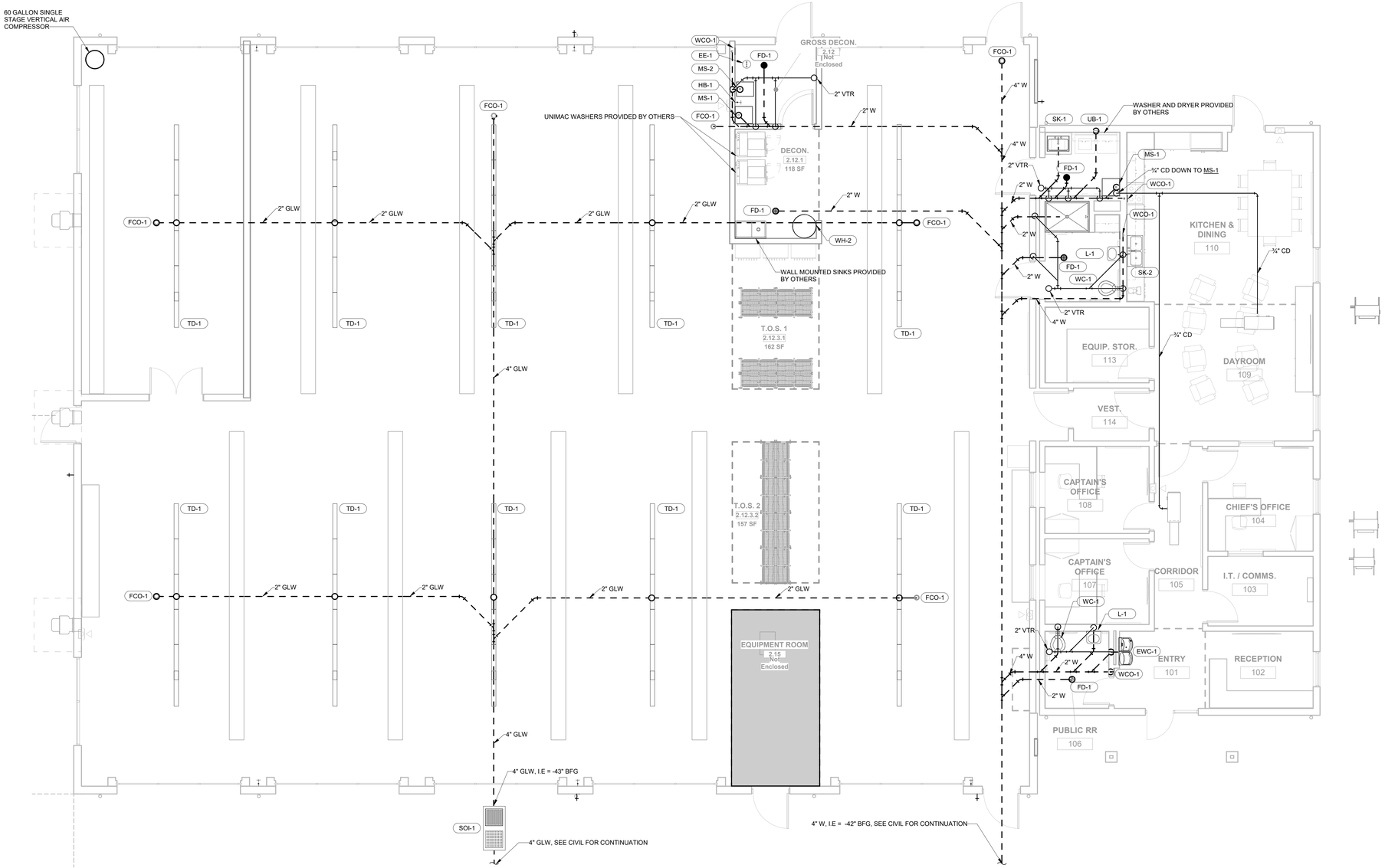

1 PLUMBING FLOOR PLAN - WASTE AND VENT

3/16" = 1'-0"

Kimley»Horn

7900 RANCHARRAH PARKWAY
SUITE 100
RENO, NV 89511
PHONE: 775.787.7552

2023 ©

This document is an instrument of service prepared solely for Kimley-Horn's client and for a particular purpose. Any other use or reliance is without liability to Kimley-Horn.

SEALS

PRELIMINARY
FOR REVIEW ONLY
NOT FOR RECORDATION PURPOSES
Kimley»Horn
ENGINEER _____
PE NO. _____ DATE _____

WEST WENDOVER FIRE STATION #13

1121 N. GENE L. JONES WAY

CLIENT PROJECT INFO

NO.	DATE	DRAWING ISSUE DESCRIPTION

DESIGNED BY: AS
DRAWN BY: AS
CHECKED BY: MCM
SCALE: 3/16" = 1'-0"
DATE: 5/01/2023
PROJECT NO: 092767002
FILENAME:

PLUMBING FLOOR PLAN - WASTE AND VENT

P200

5/2/2023 12:46:04 PM BIM 360://092767002/Wendover Fire Station/Wendover FS MEP.rvt

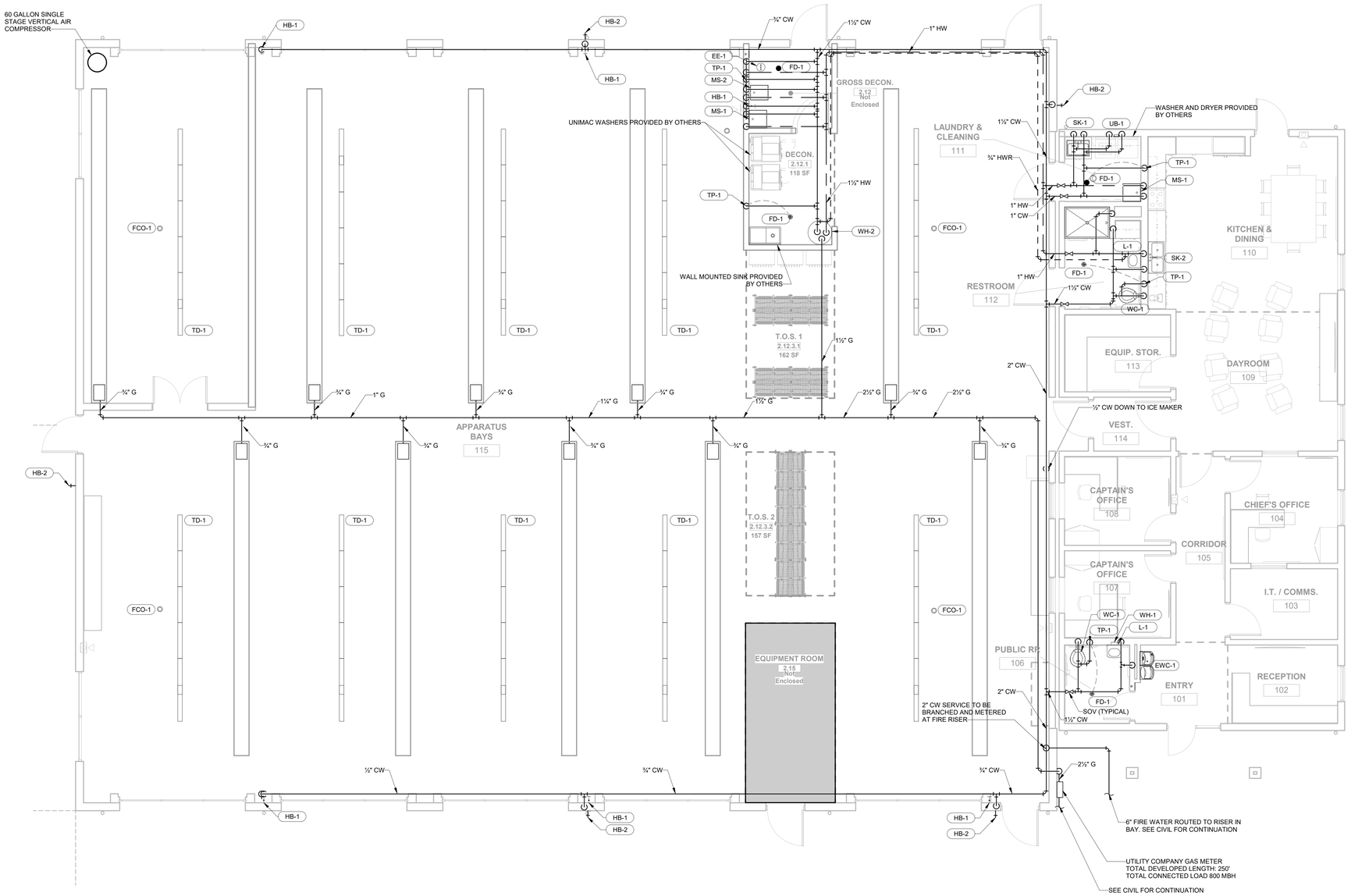

1 PLUMBING FLOOR PLAN - WATER

3/16" = 1'-0"

Kimley»Horn

7900 RANCHARRAH PARKWAY
SUITE 100
RENO, NV 89511
PHONE: 775.787.7552

2023 ©

This document is an instrument of service prepared solely for Kimley-Horn's client and for a particular purpose. Any other use or reliance is without liability to Kimley-Horn.

SEALS

PRELIMINARY
FOR REVIEW ONLY
NOT FOR RECORDATION PURPOSES
Kimley»Horn
ENGINEER _____
PE NO. _____ DATE _____

WEST WENDOVER FIRE STATION #13

1121 N. GENE L. JONES WAY

CLIENT PROJECT INFO

NO:	DATE	DRAWING ISSUE DESCRIPTION

DESIGNED BY: AS
DRAWN BY: AS
CHECKED BY: MCM
SCALE: 3/16" = 1'-0"
DATE: 5/01/2023
PROJECT NO: 092767002
FILENAME:

PLUMBING FLOOR PLAN - DOMESTIC

P201

5/2/2023 12:46:13 PM BIM 360://092767002/Wendover Fire Station/Wendover FS MEP.rvt

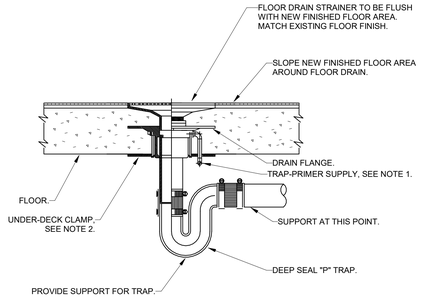

NOTES:

1. FOR TRAP-PRIMER REQUIREMENTS REF. PLAN DWG'S AND SPECIFICATIONS.
2. PROVIDE UNDER DECK CLAMP ON THIS SLAB INSTALLATIONS OF 5" OR LESS. SECURE CLAMP TO DRAIN, REF. SPECIFICATIONS.
3. NO-HUB FOR ABOVE GRADE INSTALLATION.

1 FLOOR DRAIN
N.T.S

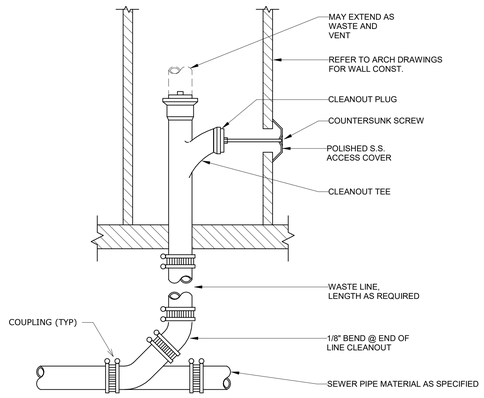

2 WALL CLEANOUT
N.T.S

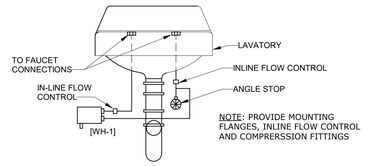

3 LAVATORY/WATER HEATER CONNECTION
N.T.S

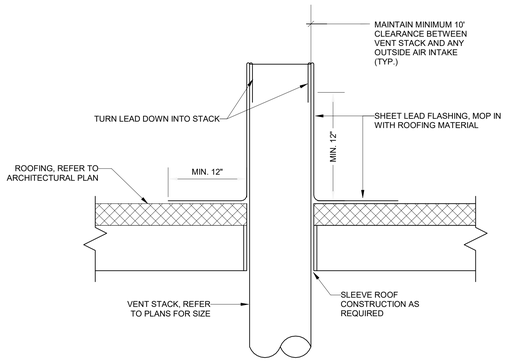

4 VENT THROUGH ROOF
N.T.S

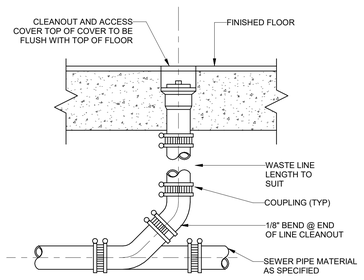

5 FLOOR CLEANOUT
N.T.S

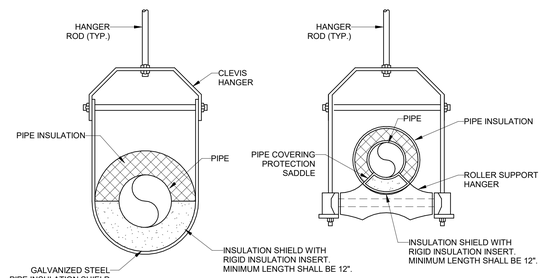

NOTES:

1. USE CLEVIS HANGER FOR 1/2" UP TO 4" .
2. USE ROLL SUPPORT HANGER FOR 6" TO 8".
3. PIPE 10" AND LARGER SHALL HAVE ROLLER. SUPPORT HANGER WITH DUAL RODS. FASTEN TO TOP CHORD OF STRUCTURAL ELEMENTS.

6 PIPE HANGER FOR INSULATED PIPE
N.T.S

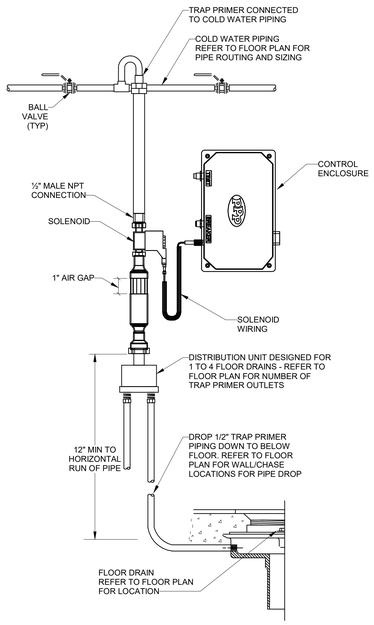

7 POWERED TRAP PRIMER DETAIL
N.T.S

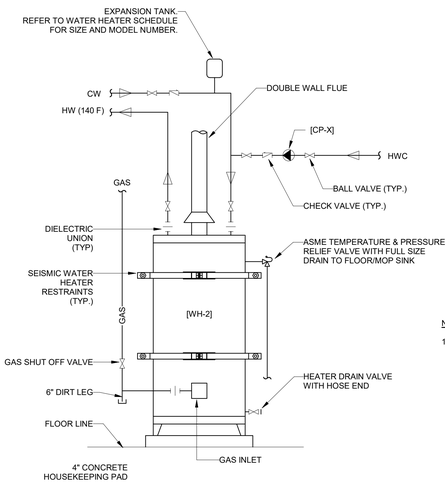

NOTES:

1. WATER HEATER STRAPPING SHALL BE AT POINTS WITHIN THE UPPER ONE-THIRD AND LOWER ONE-THIRD (1/3) OF ITS VERTICAL DIMENSIONS. A MINIMUM (1/3) DISTANCE OF FOUR (4) INCHES SHALL BE MAINTAINED ABOVE CONTROLS WITH THE STRAPPING.

8 GAS FIRED WATER HEATER WITH CIRCULATION PUMP
N.T.S

Kimley»Horn

7900 RANCHARRAH PARKWAY
SUITE 100
RENO, NV 89511
PHONE: 775.787.7552
2023 ©

This document is an instrument of service prepared solely for Kimley-Horn's client and for a particular purpose. Any other use or reliance is without liability to Kimley-Horn.

SEALS

PRELIMINARY
FOR REVIEW ONLY
NOT FOR RECORDATION PURPOSES
Kimley»Horn
ENGINEER _____
PE NO. _____ DATE _____

WEST WENDOVER FIRE STATION #13

1121 N. GENE L. JONES WAY

CLIENT PROJECT INFO

NO:	DATE	DRAWING ISSUE DESCRIPTION

DESIGNED BY: AS
DRAWN BY: AS
CHECKED BY: MCM
SCALE: 12" = 1'-0"
DATE: 5/01/2023
PROJECT NO: 092767002
FILENAME: _____

PLUMBING DETAILS

P600

5/2/2023 12:46:12 PM BIM 360://092767002-Wendover Fire Station/Wendover FS MEP.rvt

ELECTRICAL SYMBOLS

CONDUIT AND RACEWAY		MOUNTING (UON)
	CONDUIT RUN IN OR ON CEILING OR WALL.	NA
	CONDUIT RUN IN FLOOR, UNDER FLOOR, OR UNDERGROUND.	NA
	MARKS INDICATE QTY OF CONDUCTORS IN CONDUIT EXCLUDING GROUND. NO MARKS INDICATE (2) CONDUCTORS. ADD GROUND PER NEC FOR EMT & NON-METALLIC CONDUIT.	NA
	LONG MARK INDICATES GROUND FOR ISOLATED GROUNDING SYSTEM. SIZE PER NEC.	NA
	BRANCH CIRCUIT (DIAGRAMMATIC)	NA
LA-1	HOMERUN INDICATING PANEL AND CIRCUIT NUMBER.	NA
LA-[1,3,5]	HOMERUN WITH CIRCUIT NUMBER IN BRACKETS INDICATING MULTI-PHASE LOAD.	NA
ON HA-1	"ON" INDICATES CIRCUITING SPLIT AT DIFFERENT LOCATIONS	NA
	CONDUIT DOWN.	NA
	CONDUIT UP.	NA
	CONDUIT STUB AND CAP.	NA
POWER DEVICES		MOUNTING (UON)
	DUPLEX CONVENIENCE OUTLET, +18" AFF (TYPICAL).	W, +18" AFF
	DUPLEX CONVENIENCE OUTLET, COUNTER HEIGHT +48" AFF (TYPICAL).	W, FVMH
	CONVENIENCE OUTLET W/ GFCI PROTECTION.	W, +18" AFF
WP	CONVENIENCE OUTLET W/ GFCI PROTECTION & WEATHER PROOF-IN-USE COVER.	W, +18" AFF
IG	DUPLEX CONVENIENCE OUTLET W/ DEDICATED CIRCUIT & ISOLATED GROUND.	W, +18" AFF
MON	DUPLEX CONVENIENCE OUTLET FOR MONITOR. COORDINATE WITH ARCH/OWNER.	W, +60" AFF
USB	DUPLEX CONVENIENCE OUTLET WITH INTEGRAL USB CHARGING PORTS.	W, +18" AFF
DF	DUPLEX CONVENIENCE OUTLET FOR DRINKING FOUNTAIN. COORDINATE WITH MECH.	W, +30" AFF
REF	DUPLEX CONVENIENCE OUTLET W/ DEDICATED CIRCUIT FOR REFRIGERATOR.	W, +42" AFF
DISP	DUPLEX CONVENIENCE OUTLET W/ DEDICATED CIRCUIT FOR WASTE DISPOSAL.	W, +18" AFF
	DOUBLE DUPLEX CONVENIENCE OUTLET.	W, +18" AFF
	DUPLEX CONVENIENCE OUTLET, CEILING MOUNTED, FVMH.	C, FVMH
	QUAD RECEPTACLE IN FLOOR BOX.	FL
	DUPLEX RECEPTACLE IN FLOOR BOX.	FL
	SPECIAL PURPOSE OUTLET, NEMA CONFIGURATION AND VOLTAGE AS NOTED.	W, FVMH
USE	JUNCTION BOX, SPECIFIC USE AS NOTED.	W, FVMH
TELECOMMUNICATION DEVICES		MOUNTING (UON)
#	DATA OUTLET (SINGLE DATA OUTLET UNLESS OTHERWISE NOTED ON DRAWINGS.)	W
	TELEPHONE OUTLET	W
	WIRELESS ACCESS POINT (WAP)	C
FIRE ALARM		MOUNTING (UON)
	SMOKE DETECTOR.	C
D	DUCT SMOKE DETECTOR.	FVM
CO	SMOKE/CO DETECTOR.	FVM
	HEAT DETECTOR.	C
FS	FLOW SWITCH.	W
TS	TAMPER SWITCH.	W
RM	RELAY MODULE.	FVM
MM	MONITOR MODULE	W
CO	CARBON MONOXIDE DETECTOR.	W
	FIRE STROBE, CEILING MOUNTED.	C
	FIRE HORN STROBE, CEILING MOUNTED.	C
	FIRE LOUDSPEAKER, CEILING MOUNTED.	C
	FIRE STROBE, WALL MOUNTED AT +84" AFF.	W
	FIRE HORN STROBE, WALL MOUNTED AT +84" AFF.	W
	FIRE HORN STROBE, WALL MOUNTED.	C
	FIRE HORN STROBE, WALL MOUNTED.	C
	FIRE HORN STROBE, WALL MOUNTED.	C
WALL	FIRE ALARM CONTROL PANEL, SURFACE MOUNTED.	W

ELECTRICAL SYMBOLS

LIGHTING (REFER TO LIGHTING FIXTURE SCHEDULE FOR DETAILS)		MOUNTING (UON)
L#	LIGHTING FIXTURE TAG, INDICATING FIXTURE ID.	
EM	HALF SHADING AND/OR 'EM' TAG INDICATES FIXTURE W/ 90 MIN. EMEGENCY BACKUP.	W
	RECESSED VOLUMETRIC TROFFER, 1'X4', 2'X2', 2'X4'	C
	STRIP LIGHT FIXTURE.	C
	LINEAR LIGHTING FIXTURE.	C, W, FL
	RECESSED SQUARE DOWNLIGHT FIXTURE.	C
	RECESSED AND/OR SEMI-RECESSED ROUND DOWNLIGHT FIXTURE.	C
	TRACK AND TRACK LIGHT FIXTURE.	C, W
WALL	VANITY FIXTURE.	W
	EXIT SIGN, SINGLE FACE. ARROWS INDICATE PATH OF EGRESS. REFER TO PLANS FOR MOUNTING. ON UNSWITCHED LEG ON CIRCUIT.	FVM
	EXIT SIGN, DOUBLE FACE. ARROWS INDICATE PATH OF EGRESS. REFER TO PLANS FOR MOUNTING. ON UNSWITCHED LEG ON CIRCUIT.	FVM
LIGHTING CONTROLS		MOUNTING (UON)
S	LINE VOLTAGE LIGHT SWITCH, SINGLE POLE, +48" AFF.	W, +48" AFF
S_3	THREE-WAY SWITCH, +48" AFF.	W, +48" AFF
S_4	FOUR-WAY SWITCH, +48" AFF.	W, +48" AFF
S_D	LINE VOLTAGE DIMMER SWITCH, +48" AFF.	W, +48" AFF
S_K	KEYED SWITCH, +48" AFF.	W, +48" AFF
S_L	LIGHT SWITCH, SINGLE POLE, LIGHTED HANDLE, +48" AFF.	W, +48" AFF
S_O	MOMENTARY OVERRIDE SWITCH, +48" AFF.	W, +48" AFF
S_{LV}	LOW VOLTAGE DIMMING SWITCH, +48" AFF.	W, +48" AFF
S_{OS}	LINE VOLTAGE DIMMING SWITCH, OCCUPANCY SENSOR +48" AFF.	W, +48" AFF
S_T	DIGITAL TIME SWITCH, +48" AFF.	W, +48" AFF
S_0	MOMENTARY CONTACT SWITCH, +48" AFF.	W, +48" AFF
OS	OCCUPANCY SENSOR, DUAL TECHNOLOGY.	C
PC	PHOTOELECTRIC SENSOR.	C
HM	CONTROL ETHERNET GATEWAY HUB. REFER TO LIGHTING CONTROLS RISER DIAGRAM.	FVM
PP	CONTROL POWER PACK. REFER TO LIGHTING CONTROLS RISER DIAGRAM.	FVM
S#	CONTROL DEVICE. REFER TO LIGHTING CONTROLS RISER DIAGRAM.	W, +48" AFF
ONELINE		
M	CT METER.	
	BREAKER.	
LSI	BREAKER WITH GFI PROTECTION, "LSI" INDICATES TRIP SETTINGS LONG, SHORT, & INSTANTANEOUS.	
	GROUND.	
GND	GROUND BUSBAR.	
NEUT	NEUTRAL BUSBAR.	
	TRANSFORMER PAD MOUNTED.	
	ATS.	
	PANELBOARD.	
EQUIPMENT		MOUNTING (UON)
M	MOTOR RATED SWITCH.	FVM
	MOTOR RATED HAND-OFF-AUTO SWITCH.	FVM
	EMERGENCY POWER OFF SWITCH, MUSHROOM TYPE.	W, FVMH
	DISCONNECT, HEAVY DUTY, NON-FUSIBLE.	W
	DISCONNECT, HEAVY DUTY, FUSIBLE.	W, FVMH
	MAGNETIC MOTOR STARTER.	W
	COMBINATION MOTOR STARTER & DISCONNECT.	W, FVMH
	VARIABLE FREQUENCY DRIVE.	W
WALL	ELECTRICAL PANEL, SURFACE MOUNTED.	W
WALL	ELECTRICAL PANEL, FLUSH MOUNTED.	W
	TRANSFORMER.	FL
	DISTRIBUTION PANELBOARD.	W, FVMH
WALL	INVERTER.	W, FVMH
WS1-1 AC1 AC 1	EQUIPMENT CALLOUT.	
WALL	AUXILIARY SYSTEM CABINET.	W, FVMH

ELEC ABBREVIATION...

1P	ONE POLE
1PH	SINGLE PHASE
2/C	TWO-CONDUCTOR
2P	TWO POLE
3/C	THREE-CONDUCTOR
3P	THREE POLE
3PH	THREE PHASE
3W	THREE WIRE
4PDT	FOUR POLE DOUBLE THROW
4PST	FOUR POLE SINGLE THROW
4W	FOUR WIRE
A/C	AIR CONDITIONIG
AC	ALTERNATING CURRENT
ACS	ACCESS CONTROL SYSTEM
ADA	AMERICANS WITH DISABILITIES ACT
ADJ	ADJACENT
AFC	AVAILABLE FAULT CURRENT
AFF	ABOVE FINISHED FLOOR / GRADE
AIC	AMPERE INTERRUPTING CAPACITY
AL	ALUMINUM
ALCP	AREA LIGHT CONTACTOR PANEL
ALT	ALTERNATE
AMP	AMPERE
APPROX.	APPROXIMATE / APPROXIMATELY
AR	AS REQUIRED
ARCH	ARCHITECTURAL / ARCHITECT
ATS	AUTOMATIC TRANSFER SWITCH
AWG	AMERICAN WIRE GAUGE
BB	BUCK BOOST
BFB	BACK FEED BREAKER
BLDG	BUILDING
BRKR	BREAKER
BTU	BRITISH THERMAL UNIT
C	CEILING
CATV	COMMUNITY ANTENNA TELEVISION
CB	CIRCUIT BREAKER
CFBA	CUSTOM COLOR / FINISH SELECTED BY ARCHITECT
CFCI	CONTRACTOR FURNISHED CONTRACTOR INSTALLED
CFOI	CONTRACTOR FURNISHED OWNER INSTALLED
CKT	CIRCUIT
CL	CENTERLINE
CLG	CEILING
CO	CONVENIENCE OUTLET, RECEPTACLE
CU	COPPER
DA	DAMPER ACTUATOR
dB	DECIBLE, UNIT OF SOUND LEVEL
DEMO	DEMOLITION
DEPT	DEPARTMENT
DF	DRINKING FOUNTAIN
DIA	DIAMETER
DIM	DIMENSION
DISC	DISCONNECT
DN	DOWN
DPDT	DOUBLE POLE DOUBLE THROW
DWG	DRAWINGS
E	EAST
EA	EACH
EC	EMPTY CONDUIT WITH PULL WIRE
EJ	EXPANSION JOINT
ELEC	ELECTRICAL
ELEV	ELEVATOR
EM	EMERGENCY
EMB	EXTERNAL MAINTENANCE BYPASS
EMT	ELECTRICAL METALLIC CONDUIT
ENT	ELECTRICAL NONMETALLIC CONDUIT
EPO	EMERGENCY POWER OFF
EQUIP	EQUIPMENT

ELEC ABBREVIATION...

EXIST.	EXISTING
FA	FIRE ALARM
FAA	FIRE ALARM ANNUCIATOR
FACP	FIRE ALARM CONTROL PANEL
FBO	FURNISHED BY OTHERS
FLA	FULL LOAD AMPERES
FMC	FLEXIBLE METAL CONDUIT
FPEN	FUSE PER EQUIPMENT NAMEPLATE
FSD	FIRE SMOKE DAMPER
FVM	FIELD VERIFY MOUNTING
FVMH	FIELD VERIFY MOUNTING HEIGHT
FVNR	FULL VOLTAGE NON-REVERSING
FVR	FULL VOLTAGE REVERSING
G	GROUND
GALV	GALVANIZED
GEC	GROUNDING ELECTRODE CONDUCTOR
GEN	GENERATOR
GFCI	GROUND FAULT CIRCUIT INTERRUPTER
GFP	GROUND FAULT PROTECTION
GND	GROUND
HD	HEAVY DUTY
HID	HIGH INTENSITY DISCHARGE
HOA	HAND-OFF-AUTOMATIC
HP	HORSEPOWER
HPS	HIGH-PRESSURE SODIUM
HV	HIGH VOLTAGE
HVAC	HEATING, VENTILATION & AIR CONDITIONING
Hz	HERTZ, UNIT OF FREQUENCY
I/O	INPUT / OUTPUT
IG	ISOLATED GROUND
IMC	INTERMEDIATE METAL CONDUIT
IN/IS	INSULATED / ISOLATED
IR	INFRARED
KV	KILOVOLT
KVA	KILOVOLT AMPERE
KVAR	KILOVOLT AMPERE REACTIVE
KW	KILOWATT
KWH	KILOWATT HOUR
LED	LIGHT EMITTING DIODE
LFNC	LIQUID TIGHT FLEXIBLE NONMETALLIC CONDUIT
LPS	LOW-PRESSURE SODIUM
LRA	LOCKED ROTOR AMPERES
LTG	LIGHTING
LV	LOW VOLTAGE
MAX	MAXIMUM
MBJ	MAIN BONDING JUMPER
MC	METAL CLAD
MCA	MINIMUM CIRCUIT AMPERES
MCB	MAIN CIRCUIT BREAKER
MCC	MOTOR CONTROL CENTER
MECH	MECHANICAL
MFR	MANUFACTURER
MH	MAN HOLE
MIN	MINIMUM
MISC	MISCELLANEOUS
MLO	MAIN LUGS ONLY
MOCP	MAXIMUM OVER-CURRENT PROTECTION
MON	MONITOR
N	NORTH
NA	NOT APPLICABLE
NC	NORMALLY CLOSED
NEC	NATIONAL ELECTRIC CODE
NEMA	NATIONAL ELECTRIC MANUFACTURERS ASSOCIATION
NFC	NATIONAL FIRE CODE
NFPA	NATIONAL FIRE PROTECTION ASSOCIATION
NIC	NOT IN CONTRACT
NL	NIGHT LIGHT

ELEC ABBREVIATION...

NO	NORMALLY OPEN
NO.	NUMBER
NTS	NOT TO SCALE
OAE	OR APPROVED EQUAL
OC	ON CENTER
OCP	OVER-CURRENT PROTECTION
OFCI	OWNER FURNISHED CONTRACTOR INSTALLED
OFOI	OWNER FURNISHED OWNER INSTALLED
OHD	OVERHEAD DOOR
OL	OVERLOAD
PF	POWER FACTOR
PH	PHASE
PNL	PANEL
PROJ	PROJECTOR
PVC	POLYVINYL CHLORIDE
QTY	QUANTITY
R	RELOCATED DEVICE / EQUIPMENT
RAU	REMOTE ANNUNCIATOR UNIT
RCP	REFLECTED CEILING PLAN
REF	REFRIGERATOR
REV	REVISIONS / REVISED
RMC	RIGID METAL CONDUIT
RNC	RIGID NONMETALLIC CONDUIT
RPM	REVOLUTIONS PER MINUTE
RR	REMOVE & RELOCATE
S	SOUTH
S/N	SWITCH NEUTRAL
S/S	START / STOP
SCA	SHORT CIRCUIT AMPERES
SF	SQUARE FOOT / FEET
SFBA	STANDARD FINISH / COLOR BY ARCHITECT
SPD	SURGE PROTECTION DEVICE
SPDT	SINGLE POLE DOUBLE THROW
SPEC	SPECIFICATION
SPST	SINGLE POLE SINGLE THROW
SQ	SQUARE
ST	SINGLE THROW
STRUCT	STRUCTURAL
SWBD	SWITCHBOARD
SWGR	SWITCHGEAR
TEMP	TEMPORARY
TL	TWISTLOCK
TP	TWISTED PAIR
TSP	TWISTED SHIELDED PAIR
TTB	TELEPHONE TERMINAL BOARD
TV	TELEVISION (CABLE)
TVSS	TRANSIENT VOLTAGE SURGE SUPPRESSOR
TYP	TYPICAL
UF	UNDERFLOOR / UNDERSLAB
UGND	UNDERGROUND
UNO	UNLESS NOTED OTHERWISE
UNSW	UNSWITCHED
UPS	UNINTERRUPTIBLE POWER SOURCE
V	VOLTS / VOLTAGE
VA	VOLT AMPERE
VFD	VARIABLE FREQUENCY DRIVE
W	WEST
W/	WITH
W/O	WITHOUT
WH	WATER HEATER
WP	WEATHER PROOF (NEMA 3R)
X	REMOVE / DEMOLISH
XF	TRANSFORMER
XP	EXPLOSION PROOF
Y	WYE

ELECTRICAL SHEET LIST

SHEET NUMBER	SHEET NAME
E000	ELECTRICAL SYMBOLS, ABBREVIATIONS, AND NOTES
E001	ELECTRICAL SPECIFICATIONS
E100	SITE ELECTRICAL PLAN
E201	POWER PLAN
E202	LIGHTING PLAN
E600	SINGLE LINE DIAGRAM
E601	PANEL SCHEDULES
E602	ELECTRICAL DETAILS
E603	ELECTRICAL DETAILS
F000	FIRE ALARM RISER DIAGRAM
F101	FIRE ALARM PLAN

Kimley»Horn

7900 RANCHARRAH PARKWAY
SUITE 100
RENO, NV 89511
PHONE: 775.787.7552

2023 ©

This document is an instrument of service prepared solely for Kimley-Horn's client and for a particular purpose. Any other use or reliance is without liability to Kimley-Horn.

SEALS

PRELIMINARY
FOR REVIEW ONLY
NOT FOR RECORDATION PURPOSES
Kimley»Horn
ENGINEER _____
PE NO. _____ DATE _____

WEST WENDOVER FIRE STATION #13

1121 N. GENE L. JONES WAY

CLIENT PROJECT INFO

NO:	DATE	DRAWING ISSUE DESCRIPTION

DESIGNED BY: JPN
DRAWN BY: JPN
CHECKED BY: JDB
SCALE: 12" = 1'-0"
DATE: 5/01/2023
PROJECT NO: 092767002
FILENAME:

ELECTRICAL SYMBOLS, ABBREVIATIONS, AND NOTES

E000

5/5/2023 10:31:57 AM BIM 360://092767002-Wendover Fire Station/Wendover FS MEP.rvt

GENERAL ELECTRICAL NOTES

1. PROVIDE ALL LABOR, MATERIALS, TOOLS, ACCESSORIES, ETC. REQUIRED FOR A COMPLETE WORKING ELECTRICAL SYSTEM.
2. ALL CONDUIT SHALL BE ROUTED UNDER FOOTINGS WHERE APPLICABLE. REFER TO STRUCTURAL DETAILS FOR MORE INFORMATION.
3. THE USE OF SERIES RATING OF UPSTREAM OR DOWNSTREAM CIRCUIT BREAKERS OR FUSES IS PROHIBITED. ONLY FULLY RATED SYSTEM COMPONENTS WILL BE ACCEPTED.
4. PULL ROPES: PROVIDE 300 POUND PULL WIRE OR NYLON EQUIVALENT IN ALL INTERIOR EMPTY CONDUIT RUNS. PROVIDE 1/4" DIA NYLON PULL ROPE IN EACH EMPTY EXTERIOR CONDUIT OR DUCT.
5. ALL MULTIPLE POLE CIRCUITS SHALL BE PROVIDED WITH HANDLE TIES AS REQUIRED BY NEC.
6. CONDUIT/CONDUCTOR RUNS SHOWN ARE DIAGRAMMATICAL ONLY. THE BEST FINAL CONDUIT ROUTING SHALL BE AS DETERMINED BY THE ELECTRICAL CONTRACTOR AT THE TIME OF CONSTRUCTION.
7. PRIOR TO PURCHASE OF ANY PANEL, PROTECTIVE DEVICES, SWITCH, STARTER, CONDUIT, WIRE, ETC., TO FEED ANY PIECE OF EQUIPMENT VERIFY THE VOLTAGE, PHASE, AND LOAD OF THAT ITEM IN THE FIELD AND/OR WITH THE PARTICULAR ENTITY INVOLVED IN THE FURNISHING THE ITEM SUCH THAT THE PROPER SIZE & RATING OF THE MATERIALS ARE PURCHASED. NO EXTRAS WILL BE ALLOWED FOR FAILURE TO COMPLY. THIS APPLIES TO ALL EQUIPMENT UNDER OTHER SECTIONS & BY THE OWNER.
8. PROVIDE ALL TRENCHING, EXCAVATION, BACK FILLING, SHORING, PUMPING, COMPACTION TEST ETC. THAT ARE REQUIRED FOR THE SCOPE OF ELECTRICAL WORK.
9. VERIFY THE EXACT LOCATION AND ELEVATION OF ALL ELECTRICAL EQUIPMENT PRIOR TO ROUGH-IN. FINAL CONNECTIONS OF EQUIPMENT SHALL BE PER MANUFACTURERS APPROVED WIRING DIAGRAMS, DETAILS AND INSTRUCTIONS. THE ELECTRICAL CONTRACTOR SHALL PROVIDE MATERIALS AND EQUIPMENT COMPATIBLE WITH EQUIPMENT ACTUALLY SUPPLIED.
10. ALL PANELBOARDS, SWITCHES, MOTOR STARTERS AND SWITCHBOARD CIRCUIT BREAKERS SHALL HAVE ENGRAVED MICARTA NAMEPLATES.
11. PROVIDE ALL PANELBOARDS WITH TYPED DIRECTORIES INSTALLED UNDER A CLEAR PLASTIC COVER. SUBMIT DIRECTORY INFORMATION TO THE OWNER FOR APPROVAL PRIOR TO FINALIZATION. PROVIDE NEW DIRECTORIES FOR ANY PANELBOARDS REQUIRING MODIFICATION.
12. COORDINATE ALL NEW OR PROPOSED WORK WITH EXISTING CONDITIONS. FIELD CONFLICTS AND/OR DISCREPANCIES IN THE DRAWINGS SHALL BE BROUGHT TO THE ATTENTION OF THE ENGINEER OF RECORD FOR RESOLUTION BEFORE PROCEEDING WITH THE WORK.
13. CONDUIT AND CONDUCTOR ROUTINGS WHERE SHOWN ON PLANS ARE DIAGRAMMATICAL. ALTERNATE ROUTES TO BE APPROVED BY CITY OF AURORA PROJECT MANAGER AND ENGINEER PRIOR TO INSTALLATION. CONTRACTOR TO FIELD COORDINATE CONDUCTOR ROUTING IN CONDUIT AND/OR IN CABLE TRAY IN THE FIELD WITH EXISTING CONDITIONS.
14. EXISTING CONDITIONS ARE INDICATED ON THE DRAWINGS WITH HALF-TONE LINE WORK AND/OR THE NOTATION "(E)". DEMOLTITION WORK IS INDICATED WITH FULL-TONE, DASHED LINE WORK, AND NEW OR PROPOSED WORK IS INDICATED WITH FULL-TONE, SOLID LINE WORK AND/OR THE NOTATION "(N)".

ELECTRICAL SPECIFICATIONS

PART ONE - GENERAL

1.1. THE WORK: ALL WORK SHALL BE NEW UNLESS OTHERWISE NOTED. THE CONTRACTOR SHALL PROVIDE THE WORK SHOWN ON THE DRAWINGS AND SPECIFIED FOR ITS INDIVIDUAL SECTIONS OF WORK. THE WORD "WORK" IS DEFINED AS ALL LABOR, TRANSPORTATION, MATERIAL, EQUIPMENT, TOOLS, INSTALLATION, SUPERVISION AND ANY OTHER INCIDENTAL ITEMS OR SERVICES NECESSARY FOR THE PROPER INSTALLATION AND OPERATION OF THE COMPLETE SYSTEMS, WHICH SHALL BE PROVIDED BY THIS CONTRACTOR WHETHER OR NOT SPECIFICALLY INDICATED OR NOTED.

1.2. RESPONSIBILITY: THIS CONTRACTOR IS SOLELY RESPONSIBLE FOR THE ACTIONS OF ITS PERSONNEL, SUPPLIERS, AND SUB-CONTRACTORS. THIS CONTRACTOR SHALL BE RESPONSIBLE FOR THE PERFORMANCE OF ALL WORK AS MAY BE REQUIRED TO ACCOMMODATE THE SUPPORT OF EQUIPMENT SAMPLES: PAINTING, STRUCTURAL SUPPORTS, CUTTING AND PATCHING, EXCAVATION AND BACKFILL, CONCRETE PADS, ROOF JACKS, ETC. REQUIRING THIS CONTRACTOR'S ENGAGEMENT OF APPROPRIATE TRADES TO PERFORM SUCH WORK FOR THE PROPER INSTALLATION AND OPERATION OF COMPLETE ELECTRICAL SYSTEMS.

1.3. MINIMUM REQUIREMENTS: THESE SPECIFICATIONS ESTABLISH THE MINIMUM REQUIREMENTS FOR THE WORK AND MATERIALS, EQUIPMENT AND METHODS TO BE PROVIDED. THE DRAWINGS MAY INDICATE REQUIREMENTS WHICH EXCEED THESE MINIMUMS.

1.4. GENERAL CONDITIONS: ALL GENERAL CONDITIONS, SPECIAL REQUIREMENTS OR GENERAL REQUIREMENTS OF THE CONSTRUCTION SPECIFICATIONS ARE MADE PART OF THIS SPECIFICATION AND HAVE THE SAME FORCE AND EFFECT AS IF COMPLETELY REPRODUCED.

1.5. DEFINITIONS:
AHJ: AUTHORITY HAVING JURISDICTION.
ASSEMBLY: AN INSTALLATION OR SYSTEM OF MULTIPLE COMPONENTS REQUIRING MULTIPLE CONNECTIONS. (EXAMPLES: TRASH COMPACTOR, MOTORIZED DOOR, HVAC SPLIT SYSTEM, ETC.).
EQUAL: ACCEPTED BY THE ENGINEER AS EQUAL.
FF&E: FURNISHINGS, FIXTURES AND EQUIPMENT - PROVIDED BY OTHERS AT JOBSITE.
RECEIVE, PROTECT, STORE, ASSEMBLE, INSTALL AND CONNECT. PROVIDE MINIMUM 5X STRUCTURAL BACKING. (EXAMPLES: CHANDELIERS, PROJECTORS, ETC.).
PROVIDE: FURNISH, INSTALL, ACTIVATE, AND COMMISSION.

1.6. CODES: ALL WORK SHALL BE DONE IN ACCORDANCE WITH THE 2017 EDITION OF THE NATIONAL ELECTRICAL CODE (NEC), THE 2015 EDITION OF THE INTERNATIONAL ENERGY CONSERVATION CODE (IECC), AND ALL OTHER ADOPTED APPLICABLE FEDERAL, STATE, AND LOCAL REGULATIONS.

1.7. PERMITS: PAY ALL FEES AND OBTAIN ALL PERMITS AND INSPECTIONS REQUIRED FOR THE WORK.

1.8. DRAWINGS: DRAWINGS ARE DIAGRAMMATIC AND SCHEMATIC IN NATURE, AND INDICATE THE TYPE, SIZE, ARRANGEMENT AND LOCATIONS OF MATERIALS AND EQUIPMENT. WORK INCLUDES CERTAIN COMPONENTS, APPURTENANCES, AND RELATED SPECIALTIES THAT MAY NOT BE SHOWN. PROVIDE ALL NECESSARY ITEMS FOR COMPLETE WORK ACCORDING TO INDUSTRY STANDARDS. IT IS THE INTENT OF THE DRAWINGS AND SPECIFICATIONS TO REQUIRE FINISHED WORK, TESTED AND READY FOR OPERATION AS SHOWN ON THE DRAWINGS. ARRANGEMENT OF EQUIPMENT AND ROUTING OF PIPING AND BRANCH CIRCUITING SHALL BE PLUMB AND AT RIGHT ANGLES TO BUILDING CONSTRUCTION, AND MAY REQUIRE MODIFICATIONS TO UNFORESEEN FIELD CONDITIONS REQUIRING ONSITE REVISIONS DURING CONSTRUCTION. (SEE ALSO "BIDDING").

1.9. COORDINATION: THIS PROJECT REQUIRES A HIGH LEVEL OF COORDINATION AND COOPERATION BY OWNER, ARCHITECT, OTHER TRADE/EQUIPMENT VENDORS AND FACILITY CONTRACTORS. CAREFULLY EXAMINE ALL CONTRACT DOCUMENTS INCLUDING, BUT NOT LIMITED TO, SHOP DRAWINGS, ETC. FOR ALL GENERAL CONSTRUCTION, STRUCTURAL, MECHANICAL, PLUMBING, ELECTRICAL, AND SPECIALTY WORK. BECOME FAMILIAR WITH, AND TO ROUGH-IN, COORDINATE THE WORK WITH ALL OTHER TRADES, TAKING RESPONSIBILITY FOR THE PROPER FITTING OF MATERIAL INTO THE BUILDING AS PLANNED WITHOUT INTERFERENCE WITH OTHER CONSTRUCTION. ESTABLISH AND VERIFY LOCATIONS, HEIGHTS, CONNECTIONS, ETC. WITH EQUIPMENT INSTALLER (AND OWNER, ARCHITECT, AND/OR INTERIOR DESIGNER FOR FF&E ITEMS), AND MAKE REASONABLE MODIFICATIONS IN THE LAYOUTS NEEDED TO PREVENT CONFLICTS WITH OTHER TRADES IN ORDER TO PROVIDE ACCESS FOR THE PROPER EXECUTION OF THE WORK.

1.10. IDENTICAL: ALL WORK REQUIRED FOR IDENTICAL ITEMS AND ASSEMBLIES OF THE PROJECT SHALL BE PROVIDED, ALTHOUGH EACH SPECIFIC IDENTICAL ITEM MAY NOT BE SHOWN IN DETAIL.

1.11. VERIFICATION: CHECK AND VERIFY ALL SIZES, DIMENSIONS, AND CONDITIONS BEFORE STARTING ANY WORK. ANY DEVIATION(S) OR PROBLEM(S) SHALL BE TRANSMITTED TO THE ENGINEER FOR REVIEW.

1.12. CONNECTIONS: CONNECT ALL EQUIPMENT, SYSTEMS, AND ASSEMBLIES PROVIDED BY OTHERS/OWNER. SAFETY DEVICES AND INTERLOCKS: EXCEPTION: DO NOT INTERCONNECT THE CONTROL SYSTEMS OF THOSE MECHANICAL AND PLUMBING SYSTEMS WHICH ARE SPECIFICALLY NOTED TO BE THE RESPONSIBILITY OF THOSE TRADES. PROVIDE FUSIBLE DISCONNECT SWITCHES AND MOTOR STARTERS FOR ALL EQUIPMENT EXCEPT THOSE ITEMS WHICH ARE SPECIFICALLY LISTED WITH INTEGRAL STARTERS/DISCONNECT SWITCHES. WHERE STARTERS AND/OR DISCONNECT SWITCHES ARE FURNISHED TOGETHER WITH EQUIPMENT, RECEIVE, INSTALL, AND CONNECT THOSE ITEMS.

1.13. SUBMITTAL: SUBMIT TO THE ENGINEER COMPLETE ELECTRONIC SETS OF SHOP DRAWINGS AND TECHNICAL DATA SHEETS FOR ALL EQUIPMENT AND MATERIALS SPECIFIED HEREIN. THE ENGINEER SHALL REVIEW SHOP DRAWINGS AND TECHNICAL DATA SHEETS FOR CONFORMANCE WITH THE CONTRACT DOCUMENTS AND ISSUE A WRITTEN ASSESSMENT TO THE OWNER PRIOR TO COMMENCEMENT OF WORK. THE ENGINEER'S FAILURE TO CORRECT ERRORS IN THE SUBMITTAL SHALL NOT RELIEVE THE CONTRACTOR OF THE OBLIGATION TO PERFORM THE WORK AS SHOWN AND/OR SPECIFIED. THE CONTRACTOR SHALL BE RESPONSIBLE FOR ALL ENGINEERING FEES NECESSARY TO CHANGE PROJECT DOCUMENTS BASED ON ALTERNATE SUBMITTAL PACKAGES/EQUIPMENT SUBSTITUTIONS.

1.14. OR-EQUAL SUBSTITUTIONS: ALL PROPOSED "OR EQUAL" SUBSTITUTIONS SHALL BE SUBMITTED TO THE ENGINEER FOR CONSIDERATION PRIOR TO BIDDING AND AFTER ALL REQUIREMENTS ASSOCIATED WITH SUBSTITUTED EQUIPMENT AND/OR MATERIALS HAVE BEEN COORDINATED WITH OTHER BUILDING TRADES, INCLUDING ALL MECHANICAL, STRUCTURAL, AND/OR ARCHITECTURAL ELEMENTS. THE OWNER'S REPRESENTATIVE SHALL PRE-APPROVE ANY PROPOSED SUBSTITUTION IN WRITING. IDENTIFY AND ANNOTATE ALL REVISED REQUIREMENTS PER BUILDING TRADE ON THE SHOP DRAWINGS. ALSO IDENTIFY ALL COST DEBITS OR CREDITS IN WRITING FOR THE PROPOSED CHANGES PER BUILDING TRADE AND SUMMARIZE THESE AS A TOTAL NET-TO-OWNER CHARGE OR CREDIT FOR CONSIDERATION.

1.15. AS-BUILT: UPON COMPLETION OF CONSTRUCTION, SUPPLY THE ENGINEER WITH AS-BUILT DOCUMENTS ACCURATELY SHOWING THE MATERIALS AND EQUIPMENT AS INSTALLED. PROVIDE OPERATION AND MAINTENANCE MANUAL(S) CONTAINING APPROVED SHOP DRAWINGS, OPERATING AND MAINTENANCE INSTRUCTION FOR SWITCHGEAR, LIGHTING FIXTURES, CONTROLS, AND SPECIALTY EQUIPMENT.

1.16. GUARANTEE: ALL MATERIALS AND WORKMANSHIP SHALL BE GUARANTEED FOR A MINIMUM OF ONE (1) YEAR FROM DATE OF ACCEPTANCE BY OWNER (LONGER IF REQUIRED BY GENERAL AND/OR SPECIAL CONDITIONS). IN ADDITION, THE INSTALLATION SHALL BE GUARANTEED TO PERFORM AS SPECIFIED AND FULFILL EACH AND EVERY REQUIREMENT OF THE DRAWINGS AND SPECIFICATIONS WHEN OPERATED IN ACCORDANCE WITH THE CONTRACTOR'S INSTRUCTIONS. SHOULD THE INSTALLATION IN ANY WAY FAIL TO DO SO, THE CONTRACTOR WILL, WITHOUT DELAY AND WITHOUT COST TO THE OWNER, PROVIDE WHATEVER ADDITIONAL EQUIPMENT, MATERIAL, AND LABOR REQUIRED TO CORRECT THE DEFICIENCY AND COMPLY WITH THE REQUIREMENTS OF THE DRAWINGS AND SPECIFICATIONS. WHERE SPECIFIED EQUIPMENT HAS A LONGER GUARANTEE PERIOD, THE TERMS OF THAT GUARANTEE SHALL GOVERN (EXAMPLE: LED SYSTEM WITH 5 YEAR GUARANTEE). INCANDESCENT LAMPS ARE EXEMPT BUT SHALL BE NEW AND UNUSED AT THE TIME OF FINAL ACCEPTANCE.

1.17. IECC COMPLIANCE: COMPLY WITH ALL REQUIREMENTS SET FORTH IN THE IECC COMPLIANCE CERTIFICATE INCLUDED IN THESE DOCUMENTS. HIRE A COMMISSIONING AGENT TO COMPLY WITH AND PERFORM ALL ASPECTS OF SECTION C408 OF THE 2018 IECC.

BIDDING

1.18. SITE VISIT: CONTRACT DOCUMENTS INDICATE NEW WORK TO BE PERFORMED AND DO NOT PURPORT TO SHOW ALL EXISTING CONDITIONS. VISIT THE SITE PRIOR TO SUBMITTING A BID TO BECOME FAMILIAR WITH EXISTING CONDITIONS. COMPARE THE WORK SPECIFIED IN THE CONTRACT DOCUMENTS AGAINST EXISTING CONDITIONS, AND IDENTIFY AND ANNOTATE ALL WORK OR CONDITIONS THAT ARE DIFFERENT FROM THE CONTRACT DOCUMENTS OR THEIR INTENT. UPON DISCOVERY, IMMEDIATELY NOTIFY AND REPORT IN WRITING ANY DISCREPANCIES TO THE ENGINEER. NO EXTRAS OR CHANGE ORDERS WILL BE ALLOWED FOR FAILURE TO PERFORM THE PRE-BID SITE VISIT.

1.19. BASIS OF PROPOSAL: PROPOSAL SHALL BE BASED ON MANUFACTURERS AND MODELS AS LISTED UNLESS "OR EQUAL" IS INDICATED. PROVIDE SUBSTITUTION REQUESTS A MINIMUM OF FIVE (5) BUSINESS DAYS PRIOR TO BID DATE CLOSING TO ALLOW TIME FOR DUE CONSIDERATION OF PROPOSED ALTERNATE AND SUBSEQUENT NOTIFICATION TO ALL OTHER BIDDERS IN THE EVENT SUBSTITUTION IS DEEMED ACCEPTABLE. DETERMINATION OF SUBSTITUTION EQUALITY RESTS SOLELY WITH THE ENGINEER.

1.20. VALUE ENGINEERING (V.E.) INITIATIVES: IN ADDITION TO THE "AS SPECIFIED/OR EQUAL" BASE BID, A COST REDUCTION INITIATIVE(S) MAY BE PROPOSED BASED ON SUBSTITUTIONS OF EQUIPMENT, MATERIALS, AND/OR METHODS. EACH SUCH PROPOSAL SHALL INCLUDE A DATA SHEET(S) ON THE SPECIFIED ITEM(S), THE PROPOSED SUBSTITUTE(S), AND THE NET CREDIT TO THE OWNER, INCLUDING ALL CREDITS AND CHARGES FROM ALL MEMBERS OF THE CONSTRUCTION TEAM. THE ENGINEER WILL REVIEW AND RENDER AN OPINION TO THE OWNER. IF THE V.E. INITIATIVE IS DECLINED, PROVIDE THE SPECIFIED EQUIPMENT/MATERIAL/METHOD. IF THE V.E. INITIATIVE IS ACCEPTED, AND IF SUCH ACCEPTANCE RESULTS IN A REQUIREMENT TO REVISE ANY DESIGN DOCUMENTS, THE CHARGES FOR THESE REVISIONS SHALL BE BILLED TO THE CONTRACTOR AND THE INVOICING SHALL BE SETTLED BEFORE THE PROJECT IS SIGNED OFF FOR FINAL ACCEPTANCE.

1.21. BIDDING: THE CIVIL, ARCHITECTURAL, MECHANICAL, KITCHEN, AND/OR INTERIOR DRAWINGS CONTAIN DETAILED DESCRIPTIONS, CIRCUITING, AND CONNECTION REQUIREMENTS WHICH ARE PART OF THIS CONTRACTOR'S RESPONSIBILITIES. DO NOT SUBMIT BIDS ON THIS PROJECT PRIOR TO REVIEWING ALL PROJECT DRAWINGS, SPECIFICATIONS, AND ADDENDA.

1.22. SPECIFICATIONS BOOK: THE SPECIFICATIONS CONTAIN SIGNIFICANT INFORMATION, CONDITIONS, AND PROCEDURES WHICH MAY HAVE A SUBSTANTIAL IMPACT ON THIS CONTRACTOR'S COSTS. DO NOT SUBMIT A BID ON THIS PROJECT UNLESS THE SPECIFICATIONS HAVE BEEN THOROUGHLY REVIEWED. THE GENERAL NOTES CONTAINED HEREIN ARE COMPLIMENTARY TO THE SPECIFICATIONS BOOK, AND IN COMPARISON THE MORE STRINGENT REQUIREMENT(S) SHALL GOVERN.

PART TWO - PRODUCTS

2.1. EQUIPMENT STANDARDS: ALL MATERIALS AND EQUIPMENT SHALL BE NEW AND OF THE HIGHEST QUALITY AVAILABLE ("SPECIFICATION GRADE"). EQUIPMENT SHALL BE CONSTRUCTED TO NEMA STANDARDS AND SHALL BE LABELED FOR THEIR INTENDED PURPOSE BY A RECOGNIZED TESTING AGENCY ACCEPTABLE TO THE AHJ (I.E., CSA, ETL, ETC.).

2.2. ACCEPTABLE MANUFACTURERS AND SUPPLIERS: WHERE EQUIPMENT AND MATERIALS ARE NOT SPECIFIED BY NAME THEY ARE DEEMED TO GENERIC, SUBJECT TO THE REQUIREMENTS LISTED HEREIN. THESE MANUFACTURERS ARE CONSIDERED CAPABLE OF OFFERING EQUIVALENT PRODUCTS. MINIMUM STANDARD IN ALL INSTANCES IS COMMERCIAL GRADE.
SWITCHGEAR: EATON, GENERAL ELECTRIC, SIEMENS, SQUARE D
LIGHT FIXTURES: ACUITY, COOPER, HUBBELL, THOMAS
WIRING DEVICES: HUBBELL, LEVITON, LEGRAND, WIREMOLD

2.3. CIRCUITING: ALL WIRING SHALL BE IN CONDUIT. CONCEALED WHERE POSSIBLE EXCEPT WHERE NOTED. EMT WITH STEEL INSULATED THROAT SET SCREW FITTINGS MAY BE USED IN DRY, PROTECTED INTERIOR LOCATIONS. PVC SCHEDULE 40 SHALL BE USED BELOW GRADE AT MINIMUM -24". WRAPPED RIGID ELBOWS AND RISERS SHALL BE USED FOR ALL THROUGH-GRADE TRANSITIONS AND STUB-UPS. RGS OR IMC CONDUIT WITH THREADED FITTINGS SHALL BE USED IN ALL LOCATIONS WHERE EXPOSED TO THE ELEMENTS OR SUBJECT TO PHYSICAL DAMAGE. IMC OR RIGID CONDUIT BELOW GRADE SHALL BE HALF-LAP WRAPPED WITH 20 MIL PVC TAPE. TYPE ENT RACEWAY IS NOT ALLOWED. CONNECT RECESSED AND SUSPENDED LIGHTING FIXTURES, MOTORIZED DAMPERS AND/OR VIBRATING EQUIPMENT WITH STEEL FLEX OR SEALTITE CONDUIT. ALL CONDUIT SHALL HAVE PULL CORD IF OTHERWISE EMPTY.

2.4. MC CABLE: MC CABLE MAY BE USED ONLY WITH SPECIFIC PERMISSION FROM THE ENGINEER. MC CABLE USE SHALL BE LIMITED TO CIRCUITING SOLUTIONS IN TIGHT CONDITIONS WHERE CONDUIT AND WIRE CIRCUITING CANNOT FIT. HOMERUNS AND FEEDERS SHALL BE CONDUIT AND WIRE.

2.5. WIRING: ALL WIRE SHALL BE COPPER UNLESS OTHERWISE NOTED. ALL WIRE SHALL BE STRANDED IN SIZES #8 AWG AND LARGER. SINGLE PHASE BRANCH CIRCUITS SHALL INCLUDE A SEPARATE NEUTRAL WIRE WITH EACH PHASE WIRE. NEUTRAL SHALL BE WHITE WITH COLOR STRIPE MATCHING COLOR OF PHASE WIRE. HOMERUNS TO PANELBOARDS SHALL BE MINIMUM #12 AWG CU IN 3/4" CONDUIT UNLESS OTHERWISE NOTED.

2.6. FUSES AND CIRCUIT BREAKERS: FUSES AND CIRCUIT BREAKERS SHALL BE SIZED PER ACTUAL RESPECTIVE EQUIPMENT PROTECTION (I.E., MOTOR CIRCUIT PROTECTOR, GROUND FAULT CIRCUIT INTERRUPTER, ARC FAULT CIRCUIT INTERRUPTER, ETC.). FUSES SHALL BE DUAL ELEMENT, CURRENT-LIMITING, AND SHALL BE INTERCHANGEABLE BETWEEN FRAME SIZES WITH STANDARD CLIP SIZE FUSE REDUCERS. PROVIDE LOCKABLE SPARE FUSE CABINET WITH (3) SPARE FUSES OF EACH SIZE USED.

2.7. DISTRIBUTION SWITCHGEAR: SWITCHGEAR SHALL HAVE COPPER BUS AND HEAVY GAUGE HOUSINGS. SWITCHGEAR IN LOCATIONS OTHER THAN LOCKED ELECTRIC ROOMS SHALL HAVE LOCKABLE COVERS. SWITCHGEAR SHALL HAVE NO LESS THAN 20% SPARE BUSSED AND USABLE SPACE, MEASURED AS A PERCENTAGE OF THE SPACE OCCUPIED BY SPECIFIED CIRCUIT BREAKERS, SWITCHES, ETC.

2.8. SERVICE SWITCHGEAR: IN ADDITION TO THE ABOVE, SERVICE SWITCHGEAR SHALL MEET THE REQUIREMENTS OF THE SERVING UTILITY.

2.9. PANELBOARDS: PANELS SHALL HAVE COPPER BUS AND HARDWARE, BOLT-ON CIRCUIT BREAKERS, FLUSH MONO-FLAT TRIM, PIANO HINGED DOORS AND COVER (DOOR-IN-DOOR) WITH LOCKABLE MASTER-KEYED FLUSH LATCHES. FLUSH-MOUNTED PANELS SHALL HAVE EMPTY CONDUITS STUBBED TO ACCESSIBLE ATTIC SPACE: (1) 3/4" CONDUIT FOR EACH THREE (3) SPARE/SPACE CIRCUITS.

2.10. SAFETY SWITCHES: SWITCHES SHALL BE GENERAL DUTY UP TO 250 VOLTS, HEAVY DUTY ABOVE 250 VOLTS. FUSIBLE SWITCHES SHALL BE FUSED PER THE NAMEPLATE RECOMMENDATIONS OF THE EQUIPMENT BEING CONNECTED.

2.11. MOTOR STARTERS: STARTERS SHALL BE MINIMUM NEMA SIZE 1 WITH INTEGRAL CONTROL TRANSFORMER, RED MUSHROOM "RUN" PILOT LIGHT AND "ON-OFF-AUTO" SELECTOR SWITCH ON COVER. OVERLOAD DEVICES SHALL BE SIZED PER THE NAMEPLATE AMPERAGE OF THE EQUIPMENT BEING CONTROLLED.

2.12. CONTACTORS: CONTACTORS SHALL BE ELECTRICALLY HELD WITH "ON-OFF-AUTO" SELECTOR SWITCH ON COVER.

2.13. RATINGS: ALL ELECTRICAL EQUIPMENT SHALL BE FULLY RATED FOR BRACING IN EXCESS OF THE MAXIMUM AVAILABLE FAULT CURRENT CALCULATED AND SHOWN AT THE EQUIPMENT CONNECTION POINT WITHIN THE DISTRIBUTION SYSTEM. MINIMUM RATING SHALL BE 10K AIC.

2.14. WIRING DEVICES: WIRING DEVICES (SWITCHES, RECEPTACLES, ETC.) SHALL BE SPECIFICATION GRADE "DECORA" STYLE, MINIMUM 20-AMP RATED. COVER PLATES SHALL BE NYLON. DEVICE AND PLATE COLOR(S) SHALL BE AS SPECIFIED BY ARCHITECT OR INTERIOR DESIGNER - VERIFY PRIOR TO COMMENCEMENT OF WORK. WIRING DEVICES EXPOSED TO THE ELEMENTS SHALL HAVE WEATHERPROOF-IN-USE LOCKABLE COVERS. RAISED STEEL BOX COVERS MAY BE USED IN UTILITY AREAS. REFER TO FOOD SERVICE NOTES (IF APPLICABLE TO THIS PROJECT) FOR ADDITIONAL REQUIREMENTS.

2.15. TRANSFORMERS: TRANSFORMERS SHALL BE TYPE TP-1 MINIMUM, WITH ALUMINUM WINDINGS, RATED FOR 150°C RISE (UNLESS OTHERWISE NOTED), MOUNTED ON RUBBER-IN-SHEAR VIBRATION ISOLATORS, CONNECTED WITH FLEXIBLE CONDUIT. PUBLISHED AND MEASURED NOISE RATING SHALL NOT EXCEED NEMA TP-20 MAXIMUM.

2.16. LIGHTING FIXTURES: LIGHT FIXTURES SHALL BE PROVIDED WITH ALL ASSOCIATED HARDWARE (HANGER BARS, PENDANTS, STEMS, RESTRAINTS, CHAINS, CORDS, LAMPS, ETC.). LENSES SHALL BE ACRYLIC, REFLECTORS SHALL BE ANODIZED. FLUORESCENT BALLASTS SHALL BE ELECTRONIC, PROGRAM RAPID START, THD LESS THAN 10%. FLUORESCENT LAMPS SHALL HAVE MINIMUM CRI OF 80%. INCANDESCENT LAMPS SHALL BE 130 VOLT, INSIDE FROST, MINIMUM 2000 HOUR LIFE. LOW VOLTAGE INCANDESCENT LAMPS SHALL BE HIR HALOGEN, MINIMUM 3000 HOUR LIFE. EXTERIOR LIGHTING FIXTURES SHALL BE INSTALLED TO PREVENT WATER, DUST AND INSECT INTRUSION, WITH GASKETING FOR DOOR/BACKPLATE AND SEALANT AT THE WIRING ENTRY POINT. REFER TO LIGHTING FIXTURE SCHEDULE WITHIN PLAN SET FOR ADDITIONAL REQUIREMENTS (LED CRITERIA, ETC.).

2.17. TAMPERPROOF: ALL EQUIPMENT AND CIRCUITING ACCESSIBLE BY THE PUBLIC SHALL BE DEMONSTRATED TO BE TAMPERPROOF AND VANDAL RESISTANT. OPENABLE DEVICES AND EQUIPMENT SHALL BE PAD LOCKABLE.

PART THREE - EXECUTION

3.1. GROUNDING: GROUND ALL EQUIPMENT AND SYSTEM NEUTRAL IN ACCORDANCE WITH THE REQUIREMENTS OF NEC ARTICLE 250. PROVIDE CODE-SIZED EQUIPMENT GROUNDING CONDUCTOR IN ALL FEEDERS AND BRANCH CIRCUIT RACEWAYS. WHERE ISOLATED GROUNDS ARE INDICATED, PROVIDE INSULATED CONDUCTOR (GREEN WITH YELLOW STRIPE).

3.2. UTILITY SERVICES: PROVIDE POWER AND COMMUNICATIONS SYSTEM SERVICES IN ACCORDANCE WITH THE REQUIREMENTS OF THE SERVING UTILITIES. CONTRACTOR TO PROVIDE ARC FLASH STUDY AND LABELLING ON ALL NEW EQUIPMENT IN ACCORDANCE WITH NEC. PROVIDE EXCAVATION, RACEWAY, STRUCTURES, GROUNDING, ETC. AS DIRECTED. POWER SERVICES AND DISTRIBUTION SYSTEM AIC RATING SHALL EXCEED MAXIMUM AVAILABLE FAULT CURRENT THROUGH UTILITY SERVICE TRANSFORMER.

3.3. TEMPORARY CONSTRUCTION POWER: PROVIDE TEMPORARY ELECTRICAL POWER DISTRIBUTION AND LIGHTING AS REQUIRED FOR ALL TRADES THAT REQUIRE SERVICE DURING THE COURSE OF THIS PROJECT IN COMPLIANCE WITH ALL NEC AND OSHA REQUIREMENTS. OWNER SHALL NOT BE RESPONSIBLE FOR TEMPORARY POWER CHARGES.

3.4. LOCATIONS: INDICATED LOCATIONS OF ALL OUTLETS AND EQUIPMENT ARE SUBJECT TO CHANGE. SHIFT/RELOCATE/RECONFIGURE ANY OUTLET, EQUIPMENT OR CONNECTION POINT UP TO 10' AS DIRECTED BY ENGINEER AT NO ADDED COST.

3.5. WORKMANSHIP: THE WORK SHALL BE INSTALLED PARALLEL AND AT RIGHT ANGLES TO THE BUILDING LINES, LEVEL AND PLUMB. THE WORK SHALL BE WELL SUPPORTED AND SOLIDLY MOUNTED. DRESS AND TIE WIRING IN PANELBOARDS AND SWITCHGEAR. THE WORK SHALL BE LEFT CLEAN WITH NO DIRT, DENTS, ABRASIONS, PAINT SPLATTERS, OR OTHER IRREGULARITIES.

3.6. FIRE STOPPING: ALL PENETRATED FIRE RATED SURFACES SHALL BE FIRE SEALED WITH APPROVED U.L. LISTED SEALANTS AS LISTED WITHIN ARCHITECTURAL SPECIFICATIONS. DO NOT EXCEED MAXIMUM ALLOWABLE SURFACE PENETRATIONS DEPENDENT ON RATING OF SURFACES. REFER TO ARCHITECTURAL DRAWINGS FOR DETERMINATION OF PENETRATION LOCATIONS THROUGH FIRE RATED ASSEMBLIES.

3.7. SUPPORTS AND HANGERS: PROVIDE 3" HIGH HOUSEKEEPING CONCRETE PAD BENEATH FLOOR MOUNTED EQUIPMENT, EXTENDING 3" BEYOND EQUIPMENT FOOTPRINT. SUPPORT AND ALIGN ALL RACEWAYS, CABINETS, BOXES, BACK BOXES, FIXTURES, AND EQUIPMENT FROM STRUCTURE. SECURE ALL SUPPORTING METHODS BY MEANS OF TOGGLE BOLTS IN HOLLOW MASONRY, EXPANSION BOLTS IN SOLID MASONRY, CONCRETE PRESET INSERTS OR EXPANSION BOLTS IN CONCRETE, MACHINE SCREWS OR BOLTS IN METAL, AND WOOD SCREWS IN WOOD CONSTRUCTION. ALL SUPPORTING SYSTEMS AND COMPONENTS SHALL BE RATED FOR A MINIMUM OF FIVE (5) TIMES THE ACTUAL LOAD.

3.8. SLEEVES AND PENETRATIONS: PENETRATIONS OF ALL SURFACES SHALL BE PROVIDED WITH SLEEVES THAT SHALL BE SEALED WITH LIKE MATERIALS AND SHALL BE FINISHED WITH ESCUTCHEON PLATES. PENETRATIONS BELOW GRADE LEVEL SHALL BE WATERTIGHT. PENETRATIONS AT EXTERIOR WALLS SHALL BE WEATHERPROOF. ROOF PENETRATIONS SHALL BE FLASHED AND COUNTER FLASHED.

3.9. EXPANSION AND CONTRACTION: RACEWAYS PASSING THROUGH BUILDING EXPANSION JOINTS, ON ROOF, AND IN AREAS OF TEMPERATURE VARIATIONS GREATER THAN 30°F SHALL BE INSTALLED WITH EXPANSION FITTINGS.

3.10. IDENTIFICATION: IDENTIFY ALL EQUIPMENT, SWITCHBOARD CIRCUITS AND ELECTRICALLY-CONNECTED EQUIPMENT WITH ENGRAVED NAMEPLATES. BOXES SHALL BE MARKED WITH PANEL AND CIRCUIT NUMBERS (PERMANENT PEN ACCEPTABLE ABOVE CEILING). NAMEPLATES SHALL BE FASTENED WITH A MINIMUM OF TWO (2) SCREWS. PANEL DIRECTORIES SHALL BE TYPED. CONDUCTORS SHALL BE TAGGED WITH CIRCUIT NUMBERS AT SOURCE, JUNCTION BOXES, AND ALL OUTLET BOXES WITH PERMANENT ADHESIVE MARKER STRIP. PANEL DIRECTORIES SHALL BE TYPED. IDENTIFY WIRING DEVICES WITH SELF ADHESIVE CLEAR SATIN FINISH LABELS WITH SOURCE AND CIRCUIT NUMBER.

3.11. ELECTRIC ROOM CODE COMPLIANCE: DUE TO THE DIAGRAMMATIC NATURE OF THE DESIGN DOCUMENTS (ELECTRICAL, MECHANICAL, PLUMBING, FIRE SPRINKLER, ETC.), COORDINATE WITH ALL FIXTURES, EQUIPMENT AND SYSTEMS SECTORS AT THE START OF THIS PROJECT TO INFORM AND VERIFY THAT NO FOREIGN SYSTEMS OR EQUIPMENT ARE MOUNTED ABOVE ELECTRICAL EQUIPMENT OR PASS THROUGH THE DESIGNATED ELECTRIC ROOMS, AND THAT A MINIMUM OF 7'-0" IS PROVIDED AS CLEAR HEADROOM ALONG ACCESS PATHS TO ELECTRIC ROOMS. ANY REROUTING OR RELOCATION OF SYSTEMS THAT A SUBCONTRACTOR FEELS

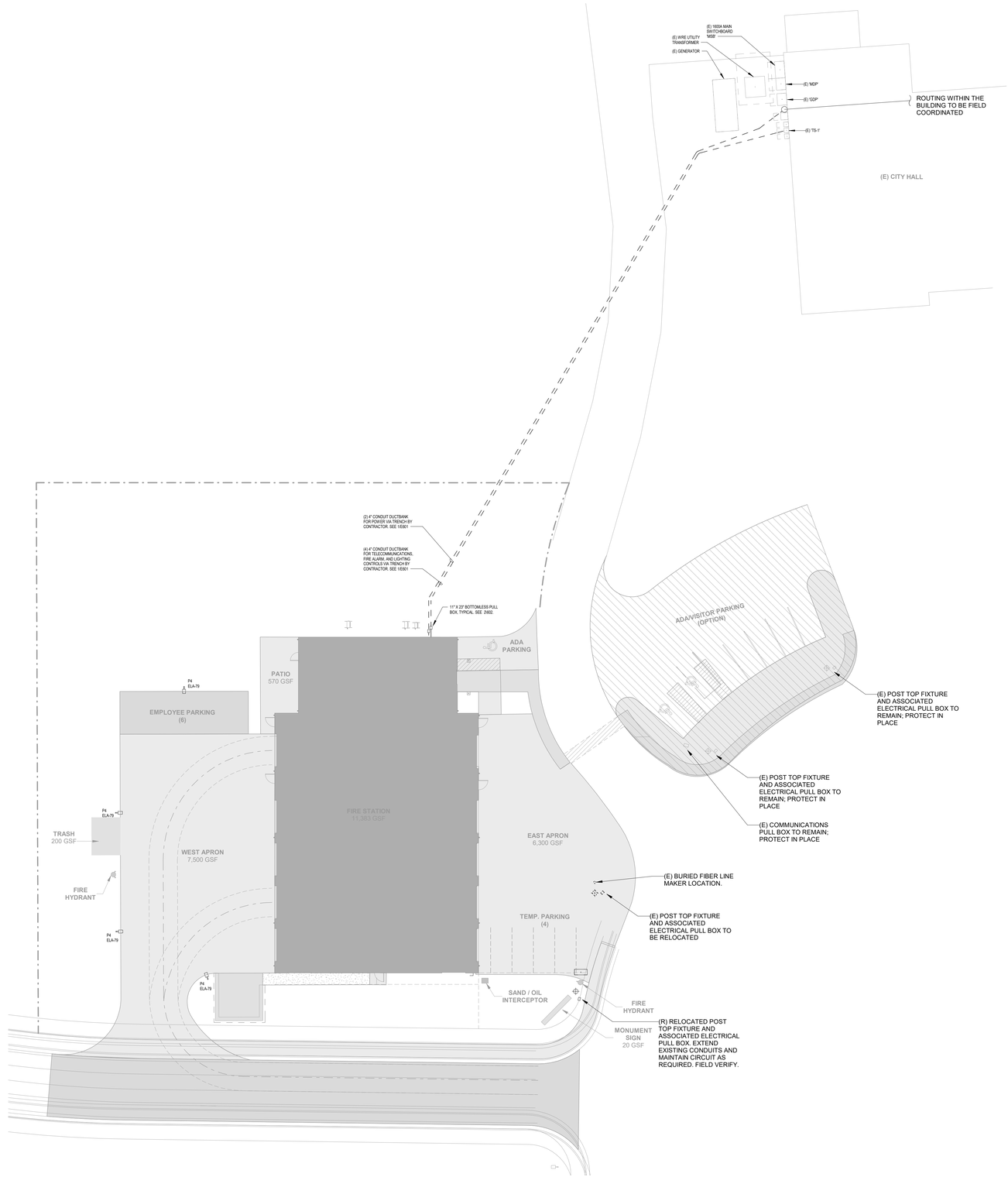

1 SITE ELECTRICAL PLAN

1" = 20'-0"

Kimley»Horn

7900 RANCHARRAH PARKWAY
SUITE 100
RENO, NV 89511
PHONE: 775.787.7552
2023 ©

This document is an instrument of service prepared solely for Kimley-Horn's client and for a particular purpose. Any other use or reliance is without liability to Kimley-Horn.

SEALS

PRELIMINARY
FOR REVIEW ONLY
NOT FOR RECORDATION PURPOSES
Kimley»Horn
ENGINEER _____
PE NO. _____ DATE _____

WEST WENDOVER FIRE STATION #13

1121 N. GENE L. JONES WAY

CLIENT PROJECT INFO

NO:	DATE	DRAWING ISSUE DESCRIPTION

DESIGNED BY: JPN
DRAWN BY: JPN
CHECKED BY: JDB
SCALE: 1" = 20'-0"
DATE: 5/01/2023
PROJECT NO: 092767002
FILENAME:

SITE ELECTRICAL PLAN

E100

5/3/2023 10:32:00 AM BIM 360://092767002/Wendover Fire Station/Wendover FS MEP.rvt

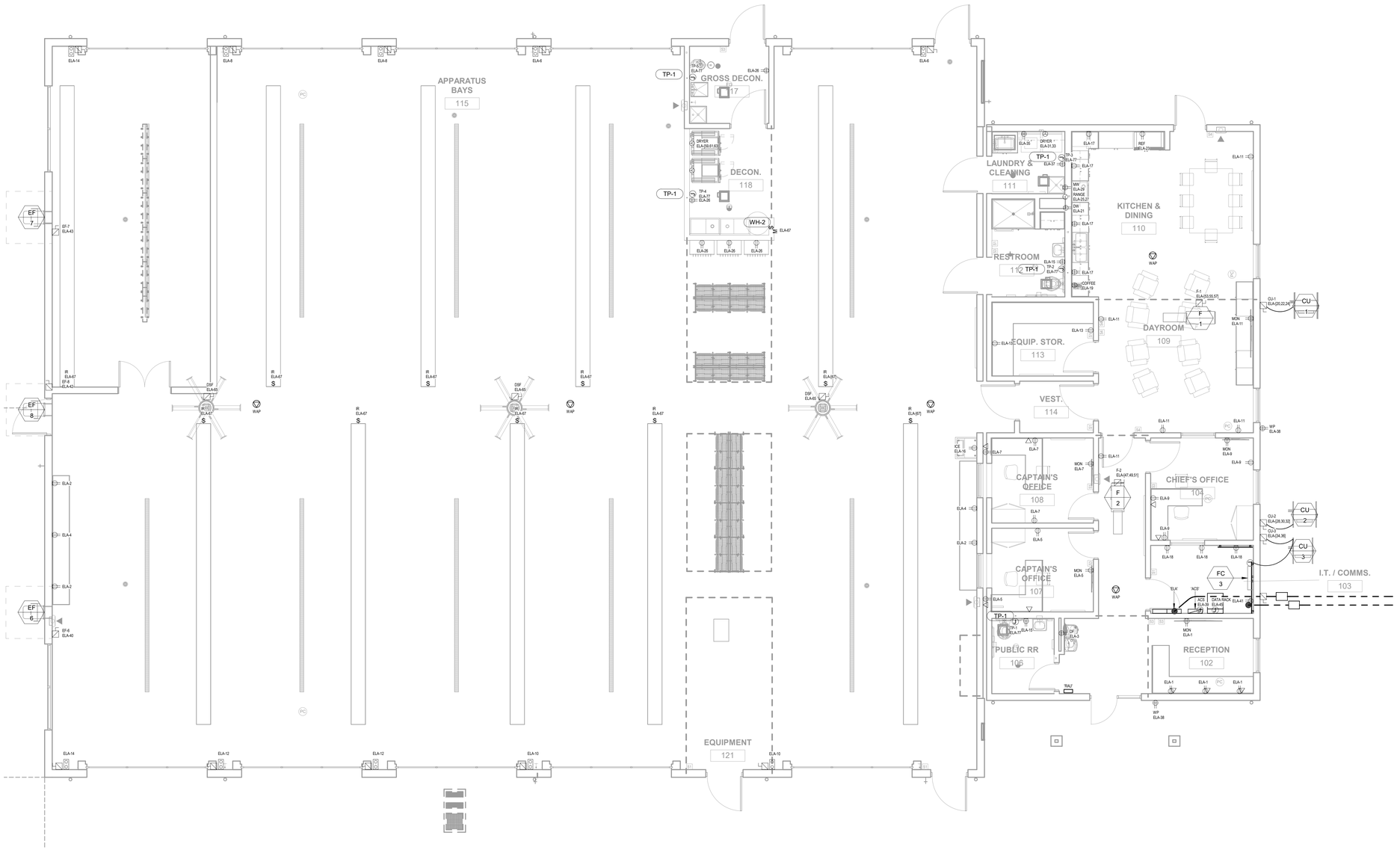

1 POWER PLAN

3/16" = 1'-0"

Kimley»Horn

7900 RANCHARRAH PARKWAY
SUITE 100
RENO, NV 89511
PHONE: 775.787.7552

2023 ©

This document is an instrument of service prepared solely for Kimley-Horn's client and for a particular purpose. Any other use or reliance is without liability to Kimley-Horn.

SEALS

PRELIMINARY
FOR REVIEW ONLY
NOT FOR RECORDATION PURPOSES
Kimley»Horn
ENGINEER _____
PE NO. _____ DATE _____

WEST WENDOVER FIRE STATION #13

1121 N. GENE L. JONES WAY

CLIENT PROJECT INFO

NO:	DATE	DRAWING ISSUE DESCRIPTION

DESIGNED BY: JPN
DRAWN BY: JPN
CHECKED BY: JDB
SCALE: 3/16" = 1'-0"
DATE: 5/01/2023
PROJECT NO: 092767002
FILENAME:

POWER PLAN

E201

BIM 360://092767002/Wendover Fire Station/Wendover FS MEP.rvt
5/2/2023 10:32:01 AM

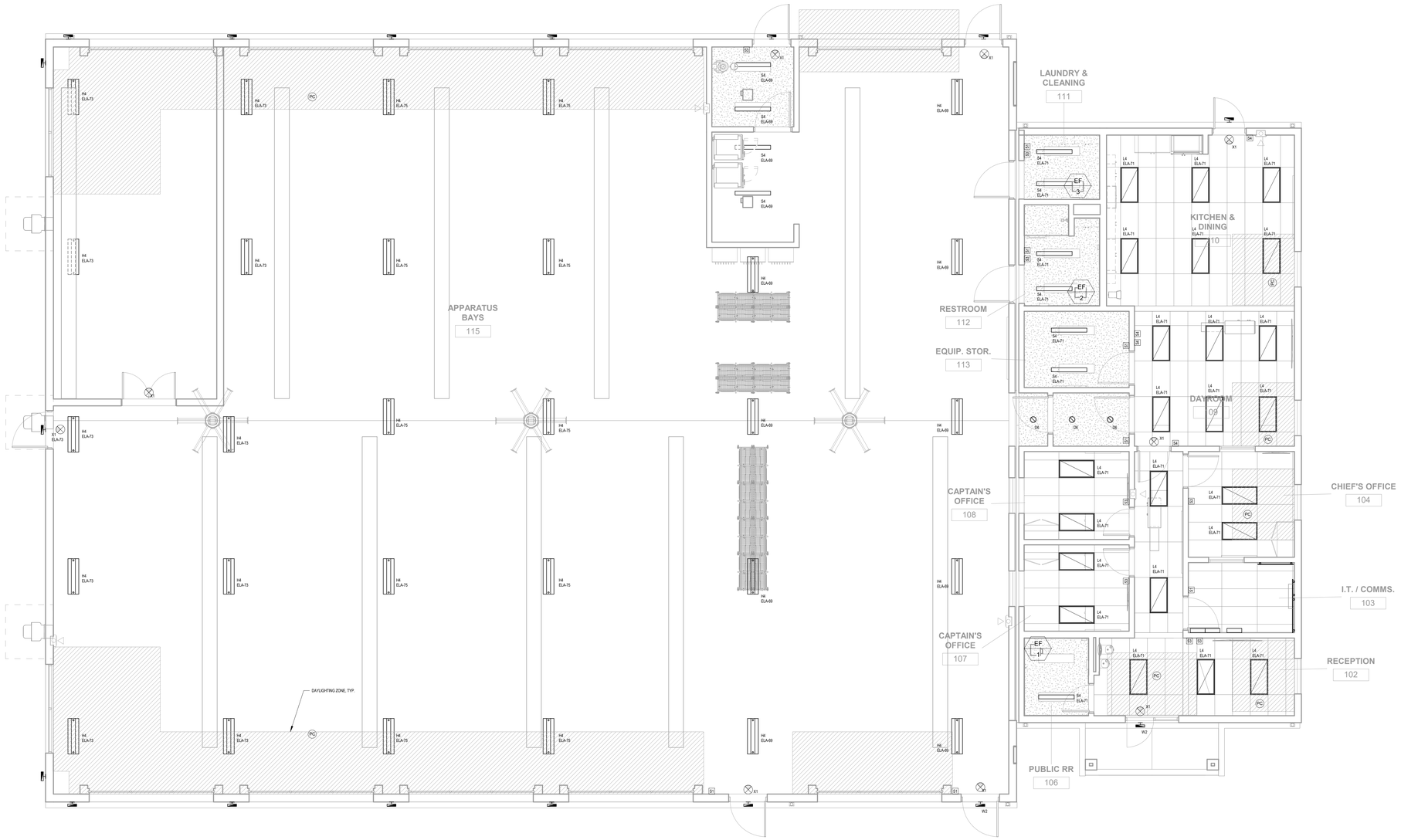

1 LIGHTING PLAN

3/16" = 1'-0"

Kimley»Horn

7900 RANCHARRAH PARKWAY
SUITE 100
RENO, NV 89511
PHONE: 775.787.7552

2023 ©

This document is an instrument of service prepared solely for Kimley-Horn's client and for a particular purpose. Any other use or reliance is without liability to Kimley-Horn.

SEALS

PRELIMINARY
FOR REVIEW ONLY
NOT FOR RECORDATION PURPOSES
Kimley»Horn
ENGINEER _____
PE NO. _____ DATE _____

WEST WENDOVER FIRE STATION #13

1121 N. GENE L. JONES WAY

CLIENT PROJECT INFO

NO.	DATE	DRAWING ISSUE DESCRIPTION

DESIGNED BY: JPN
DRAWN BY: JPN
CHECKED BY: JDB
SCALE: 3/16" = 1'-0"
DATE: 5/01/2023
PROJECT NO: 092767002
FILENAME:

LIGHTING PLAN

E202

5/3/2023 10:32:04 AM
BIM 360://092767002-Wendover Fire Station/Wendover FS MEP.rvt

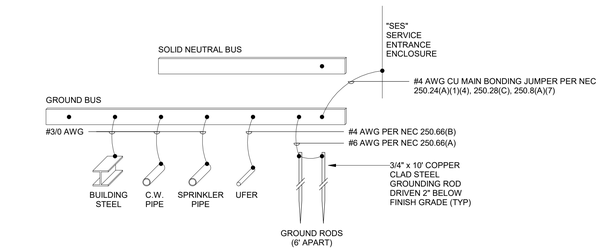

2 MAIN SERVICE ENTRANCE GROUNDING DETAIL

1/8" = 1'-0"

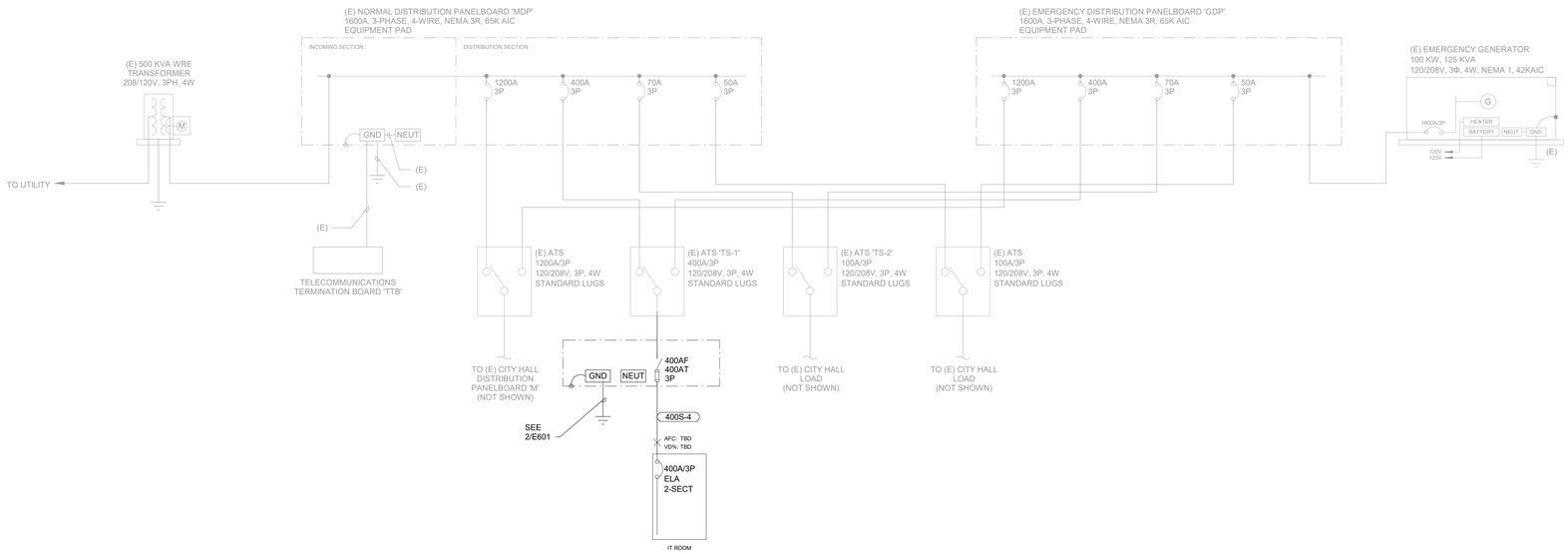

1 SINGLE LINE DIAGRAM

1/8" = 1'-0"

WIRE AND CONDUIT SCHEDULE

SCHEDULE NUMBER (2-4 DIGIT #)
RACEWAY TYPE (NOTE 5)
ALL COPPER CONDUCTORS
XXXXZ-# GND
(E.G.) 150E-4 SE
SUBSCRIPT (NOTE 4)
NUMBER OF CURRENT CARRYING CONDUCTORS (1-2 DIGIT#, NOTE 3)

TAG	TYPICAL OCP DEVICE	CONDUCTOR AMPACITY	CONDUIT SIZE	CONDUCTOR (NOTE 6)		IG (CU)	SE (CU)	NOTES
				SIZE (AWG)	GND (CU)			
15Z-#	15	15	3/4"	14	14	14	8	
20Z-#	20	20	3/4"	12	12	12	8	
30Z-#	30	30	3/4"	10	10	10	8	
40Z-#	40	40	3/4"	8	10	10	8	
55Z-#	50	55	3/4"	6	10	10	8	
70Z-#	60	70	1"	4	8	8	8	
70Z-#	70	70	1-1/4"	4	8	8	8	
85Z-#	80	85	1-1/4"	3	8	8	8	
85Z-#	90	85	1-1/4"	3	8	8	8	
95Z-#	100	95	1-1/4"	2	8	8	8	
130Z-#	125	130	1-1/2"	1	6	6	6	
150Z-#	150	150	2"	1/0	6	6	6	
175Z-#	175	175	2"	2/0	6	6	4	
200Z-#	200	200	2"	3/0	6	6	4	
230Z-#	225	230	3"	4/0	4	4	2	
255Z-#	250	255	3"	250	4	4	2	
285Z-#	300	285	3"	300	4	4	2	
310Z-#	300	310	4"	350	3	3	1/0	
335Z-#	350	335	4"	400	3	3	1/0	
380Z-#	400	380	4"	500	3	3	1/0	
400Z-#	400	400	(2) 3"	3/0	2	2	1/0	
460Z-#	450	460	(2) 3"	4/0	2	2	1/0	
460Z-#	500	460	(2) 3"	4/0	2	2	1/0	
510Z-#	500	510	(2) 3"	250	2	2	1/0	
570Z-#	600	570	(2) 3"	300	1	1	2/0	
620Z-#	600	620	(2) 3"	350	1	1	2/0	
670Z-#	700	670	(2) 4"	400	1/0	1/0	2/0	
760Z-#	800	760	(2) 4"	500	1/0	1/0	2/0	
840Z-#	800	840	(2) 4"	600	1/0	1/0	3/0	
930Z-#	900	930	(3) 3"	350	2/0	2/0	3/0	
1005Z-#	1000	1005	(3) 3"	400	2/0	2/0	3/0	
1240Z-#	1200	1240	(4) 3"	350	3/0	3/0	3/0	
1675Z-#	1600	1675	(5) 3"	400	4/0	4/0	3/0	
2010Z-#	2000	2010	(6) 3"	400	250	250	3/0	
2520Z-#	2500	2520	(6) 4"	600	350	350	3/0	
3040Z-#	3000	3040	(8) 4"	500	400	400	3/0	
4180Z-#	4000	4180	(11) 4"	500	500	500	3/0	
5040Z-#	5000	5040	(12) 4"	600	750	750	3/0	
XXXXZ-#								
XXXXZ-#								

WIRE AND CONDUIT SCHEDULE NOTES:

1. GROUND "GND" CONDUCTOR MAY BE DELETED ON SERVICE ENTRANCE CONDUCTORS.
2. EQUIPMENT GROUNDING CONDUCTORS SHALL BE SIZED PER TABLE 250-122 (NEC 2017) WHEN CIRCUIT BREAKERS ARE SIZED GREATER THAN AMPERE RATING SHOWN IN TABLE.
3. INDICATES THE QUANTITY OF CURRENT CARRYING CONDUCTORS (GROUND CONDUCTORS NOT INCLUDED) TO BE PULLED IN EACH RACEWAY.
4. GROUNDING SUBSCRIPTS ARE AS FOLLOWS: NO SUBSCRIPT = PROVIDE GROUND WIRE SIZE PER "GND" COLUMN, R = PROVIDE RACEWAY ONLY, CONDUCTORS FURNISHED AND INSTALLED BY OTHERS, SE = PROVIDE GROUND WIRE SIZED PER "SE" COLUMN, IG = PROVIDE AN INSULATED GROUND CONDUCTOR PER "IG" COLUMN ALONG WITH THE GROUND OR EQUIPMENT GROUND CONDUCTOR, NG = DO NOT PROVIDE GROUNDING CONDUCTOR IN RACEWAY.
5. RACEWAY SUBSCRIPTS "Z" ARE AS FOLLOWS: P = PVC SCH-40, E = EMT, R = RIGID, AF = ALUMINUM FLEX, SF = STEELE FLEX, LT = LIQUID TIGHT FLEX, S = SEE SPECIFICATIONS FOR REQUIRED TYPE BASED ON USE AND LOCATION.
6. ALL COPPER CONDUCTORS SHOWN ARE THWN UNLESS OTHERWISE NOTED.

Kimley»Horn

7900 RANCHARRAH PARKWAY
SUITE 100
RENO, NV 89511
PHONE: 775.787.7552
2023 ©

This document is an instrument of service prepared solely for Kimley-Horn's client and for a particular purpose. Any other use or reliance is without liability to Kimley-Horn.

SEALS

PRELIMINARY
FOR REVIEW ONLY
NOT FOR RECORDATION PURPOSES
Kimley»Horn
ENGINEER _____
PE NO. _____ DATE _____

WEST WENDOVER FIRE STATION #13

1121 N. GENE L. JONES WAY

CLIENT PROJECT INFO

NO:	DATE	DRAWING ISSUE DESCRIPTION

DESIGNED BY: JPN
DRAWN BY: JPN
CHECKED BY: JDB
SCALE: 1/8" = 1'-0"
DATE: 5/01/2023
PROJECT NO: 092767002
FILENAME:

SINGLE LINE DIAGRAM

E600

5/3/2023 10:32:04 AM BIM 360://092767002-Wendover Fire Station/Wendover FS MEP.rvt

LIGHTING FIXTURE SCHEDULE

FIXTURE ID	DESCRIPTION	SOURCE	LOAD	VOLTAGE	MOUNTING	MANUFACTURER & MODEL NUMBER	NOTES
D6		LED	18 VA				
H4	4-FOOT HIGH BAY	LED	197 VA	120 V	PENDANT MOUNTED AT +30' AFF	COLUMBIA PEL4-40MV-FAW-EDU OR APPROVED EQUAL	
P4		LED	0 VA				
S4	SURFACE MOUNTED LINEAR STRIP LIGHT	LED	32 VA	120 V	SURFACE MOUNTED @ +9' AFF	LITHONIA C-2-32-MVOLT-GEB101S-WGCUN-NST	
X1	SINGLE FACE, GREEN LETTERS, LED EXIT SIGN	LED	2 VA			ISOLITE ELT-FT-EM-G-1C-BA OR APPROVED EQUAL	

EQUIPMENT SCHEDULE

EQUIPMENT ID	EQUIPMENT DESCRIPTION	COORDINATING DISCIPLINE	VOLTAGE	POLES	LOAD	CONDUIT AND WIRE SIZE*	DISCONNECT MEANS AND SIZE	NEMA RATING	FUSE SIZE	FUSE CLASS	PANEL - CIRCUIT	NOTES
ACS	ACCESS CONTROL SYSTEM		0 V		0 VA						ELA-39	
DR	DATA RACK		0 V		0 VA						ELA-45	
FC-3	FAN COIL UNIT		0 V		0 VA							
J			0 V		0 VA						ELA-77	
TP-1	TRAP PRIMER		0 V		0 VA						ELA-77	
BD	BAY ROLL UP DOOR	ARCHITECTURAL	0 V		0 VA				FPEN		ELA-	
DSF	DESTRATIFICATION FAN	ARCHITECTURAL	0 V		0 VA				FPEN		ELA-65	
MSD	MAIN SERVICE DISCONNECT	ELECTRICAL	208 V		0 VA				FPEN	RK5		
CU-1	CONDENSING UNIT	MECHANICAL	208 V		350 VA				FPEN	RK5	ELA-20,22,24	
CU-2	CONDENSING UNIT	MECHANICAL	208 V		350 VA				FPEN	RK5	ELA-28,30,32	
CU-3	CONDENSING UNIT	MECHANICAL	208 V		350 VA				FPEN	RK5	ELA-34,36	
EF-6	EXHAUST FAN	MECHANICAL	0 V		0 VA				FPEN		ELA-40	
EF-7	EXHAUST FAN	MECHANICAL	0 V		0 VA				FPEN		ELA-43	
EF-8	EXHAUST FAN	MECHANICAL	0 V		2880 VA				FPEN		ELA-42	
F-1	ELECTRIC FURNACE	MECHANICAL	208 V		17600 VA				FPEN	RK5	ELA-53,55,57	
F-2	ELECTRIC FURNACE	MECHANICAL	208 V		17600 VA				FPEN	RK5	ELA-47,49,51	
IR	INFRARED GAS HEATER	MECHANICAL	0 V		0 VA						ELA-67	

LIGHTING CONTROLS LEGEND

- - - - - - -	LOW VOLTAGE CONTROLS CABLING (BY OTHERS)
———	LINE VOLTAGE CONDUIT AND CONDUCTORS
PP	ROOM/ZONE CONTROL PACK (LITHONIA PP20 OR APPROVE EQUAL)
S1	DIMMING SWITCH, 0-10V DIMMING, 4-BUTTON - ON/OFF/RAISE/LOWER (LITHONIA SPODM-D-SA-WH OR APPROVE EQUAL)
S2	DIMMING SWITCH W/ INTEGRAL OCCUPANCY SENSOR (LITHONIA WSX-PDT-D-SA-WH OR APPROVED EQUAL)
PC	PHOTOCELL SENSOR (LITHONIA CM ADC OR APPROVE EQUAL)
OS	OCCUPANCY SENSOR, 360 DEGREE (LITHONIA CM-PDT-9-ADC OR APPROVE EQUAL)

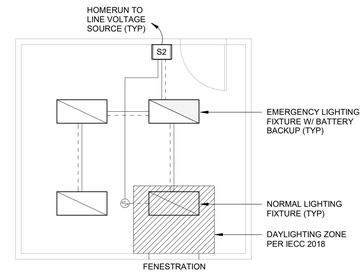

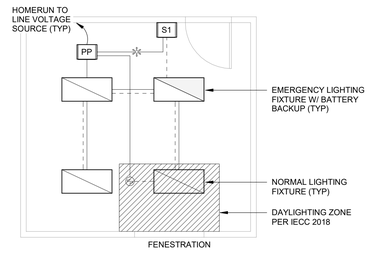

LIGHTING CONTROLS SEQUENCE OF OPERATIONS

1. GENERAL
   1. ALL LIGHTING SHALL BE HIGH EFFICIENCY LED WITH DIMMING CONTROLS. OWNER SHALL HAVE THE ABILITY TO REDUCE TOTAL LUMEN OUTPUT AS DESIRED.
   2. ALL EMERGENCY LIGHTING SHALL BE EMERGENCY BATTERY BACKUP EITHER REMOTELY MOUNTED OR INTEGRAL TO THE FIXTURE. FIXTURES WITH EMERGENCY BATTERY BACKUP ARE INDICATED ON THE PLANS. PROVIDE WITH INTEGRAL TEST SWITCH.
   3. INTERIOR LIGHTING CONTROLS SHALL BE LOW VOLTAGE, 0-10V DIMMING COMPATIBLE.
   4. DAYLIGHTING
      A. FIXTURES SPECIFIED WITH DAYLIGHTING CONTROLS SHALL BE INTEGRAL TO THE FIXTURE TO BE CONTROLLED BY AUTOMATIC PHOTOCELL DIMMING AS REQUIRED IN THE 2018 IECC.
   5. OCCUPANCY
      A. ALL LIGHTING SHALL BE CONTROLLED BY AUTOMATIC OFF/MANUAL ON OCCUPANCY SENSOR CONTROLS. EXPECT WHERE PERMITTED UNDER 2018 IECC. CONTRACTOR SHALL COORDINATE WITH END USER TO SET DELAY TIMES FOR OCCUPANCY SENSORS TO A MAXIMUM OF 30 MINUTES.
      B. THE LIGHTING IN THE HALLWAYS, LOBBIES, AND OTHER EGRESS AREAS SHALL BE HAVE NO OCCUPANCY SENSOR CONTROLS AS PERMITTED BY THE 2018 IECC.

NOTES:

1. CONTROLS CABLING AS REQUIRED. COORDINATE CONTROLS CABLING REQUIREMENTS WITH CONTROLS MANUFACTURER.

1 TYPICAL LIGHTING CONTROLS RISER DIAGRAMS

SCALE: N.T.S.

BRANCH PANEL: ELA

LOCATION: I.T. / COMMS. 103
SUPPLY FROM:
MOUNTING: SURFACE
ENCLOSURE: NEMA 1

VOLTS: 120/208 Wye
PHASES: 3
WIRES: 4

A.I.C. RATING: 22K
MAINS TYPE: MCB
MAINS RATING: 400 A
MCB RATING: 400 A

CKT	CIRCUIT DESCRIPTION	TRIP	POLES	A		B		C		POLES	TRIP	CIRCUIT DESCRIPTION	CKT
1	CO RECEPTION	20 A	1	1040 VA	540 VA					1	20 A	CO WORK BENCH	2
3	EQ DRINKING FOUNTAIN	20 A	1			370 VA	360 VA			1	20 A	CO WORK BENCH	4
5	CO CAPTAIN'S OFFICE	20 A	1					540 VA	1600 VA	1	20 A	EQ BAY DOORS	6
7	CO CAPTAIN'S OFFICE	20 A	1	720 VA	1600 VA					1	20 A	EQ BAY DOORS	8
9	CO CHIEF'S OFFICE	20 A	1			720 VA	1600 VA			1	20 A	EQ BAY DOORS	10
11	CO DAYROOM	20 A	1					1080 VA	1600 VA	1	20 A	EQ BAY DOORS	12
13	CO EQUIPMENT STORAGE	20 A	1	360 VA	1600 VA					1	20 A	EQ BAY DOORS	14
15	CO RESTROOMS	20 A	1			360 VA	1200 VA			1	20 A	EQ ICE MAKER	16
17	CO KITCHEN	20 A	1					720 VA	540 VA	1	20 A	CO TTB	18
19	EQ COFFEE MACHINE	20 A	1	1500 VA	117 VA								20
21	EQ DISHWASHER	20 A	1			180 VA	117 VA			3	20 A	HVAC CU-1	22
23	EQ REFRIGERATOR	20 A	1					180 VA	117 VA				24
25	EQ RANGE OVEN	20 A	2	4500 VA	900 VA					1	20 A	CO GROSS DECON / DECON	26
27						4500 VA	117 VA						28
29	EQ MICROWAVE	20 A	1					180 VA	117 VA	3	20 A	HVAC CU-2	30
31	EQ ELECTRIC DRYER	20 A	2	180 VA	117 VA								32
33						180 VA	175 VA						34
35	RECEPTACLE	20 A	1					180 VA	175 VA	2	20 A	HVAC CU-3	36
37	CO LAUNDRY	20 A	1	180 VA	360 VA					1	20 A	CO EXTERIOR	38
39	EQ ACCESS CONTROL SYSTE...	20 A	1			0 VA	0 VA			1	20 A	HVAC EF-6	40
41	CO TTB	20 A	1					180 VA	2880 VA	1	20 A	HVAC EF-8	42
43	HVAC EF-7	20 A	1	0 VA	--					1	--	SPACE	44
45	EQ DATA RACK	20 A	1			0 VA	--			1	--	SPACE	46
47								5867 VA	--	1	--	SPACE	48
49	HVAC F-2	20 A	3	5867 VA	--					1	--	SPACE	50
51						5867 VA	--			1	--	SPACE	52
53								5867 VA	--	1	--	SPACE	54
55	HVAC F-1	20 A	3	5867 VA	--					1	--	SPACE	56
57						5867 VA	--			1	--	SPACE	58
59								120 VA	--	1	--	SPACE	60
61	EQ GEAR TURNOUT DRYER	20 A	3	120 VA	--					1	--	SPACE	62
63						120 VA	--			1	--	SPACE	64
65	HVAC DESTRAT FAN	20 A	1					0 VA	--	1	--	SPACE	66
67	EQ INFRARED HEATERS	20 A	1	0 VA	--					1	--	SPACE	68
69	LTG BAY	20 A	1			1778 VA	--			1	--	SPACE	70
71	LTG OFFICE AREA	20 A	1					769 VA	--	1	--	SPACE	72
73	LTG BAY	20 A	1	1972 VA	--					1	--	SPACE	74
75	LTG BAY	20 A	1			1970 VA	--			1	--	SPACE	76
77	EQ TRAP PRIMERS	20 A	1					0 VA	--	1	--	SPACE	78
79	LTG WEST APRON	20 A	1	0 VA	--					1	--	SPACE	80
81							--			1	--	SPACE	82
83									--	1	--	SPACE	84
		TOTAL LOAD:		27539 VA		25475 VA		22679 VA					
		TOTAL AMPS:		233 A		216 A		189 A					

LOAD CLASSIFICATION	CONNECTED LOAD	DEMAND FACTOR	EST. DEMAND	PANEL TOTALS
EQUIPMENT	22550 VA	100.00%	22550 VA	
HVAC	39130 VA	100.00%	39130 VA	TOTAL CONN. LOAD: 75692 VA
Other	0 VA	0.00%	0 VA	TOTAL EST. DEMAND: 77305 VA
RECEPTACLE	7560 VA	100.00%	7560 VA	TOTAL CONN.: 210 A
LIGHTING	6461 VA	125.00%	8076 VA	TOTAL EST. DEMAND: 215 A

NOTES:

Kimley»Horn

7900 RANCHARRAH PARKWAY
SUITE 100
RENO, NV 89511
PHONE: 775.787.7552

2023 ©

This document is an instrument of service prepared solely for Kimley-Horn's client and for a particular purpose. Any other use or reliance is without liability to Kimley-Horn.

SEALS

PRELIMINARY
FOR REVIEW ONLY
NOT FOR RECORDATION PURPOSES
Kimley»Horn
ENGINEER _____
PE NO. _____ DATE _____

WEST WENDOVER FIRE STATION #13

1121 N. GENE L. JONES WAY

CLIENT PROJECT INFO

NO:	DATE	DRAWING ISSUE DESCRIPTION

DESIGNED BY: JPN
DRAWN BY: JPN
CHECKED BY: JDB
SCALE: As indicated
DATE: 5/01/2023
PROJECT NO: 092767002
FILENAME:

PANEL SCHEDULES

E601

5/3/2023 10:32:05 AM BIM 360://092767002-Wendover Fire Station/Wendover FS M&P.rvt

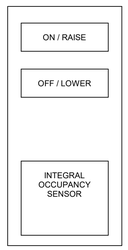

8 TYPE S2 DIMMER SWITCH W/ INTEGRAL OCCUPANCY
SCALE: N.T.S.

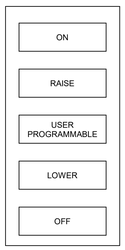

7 TYPE S1 DIMMER SWITCH
SCALE: N.T.S.

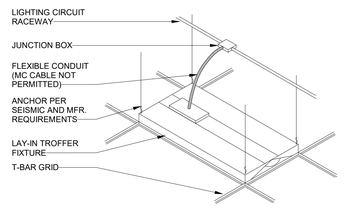

6 RECESSED TROFFER MOUNTING DETAIL
SCALE: N.T.S.

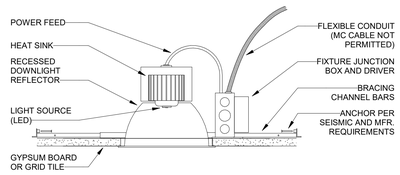

5 RECESSED DOWNLIGHT MOUNTING DETAIL
SCALE: N.T.S.

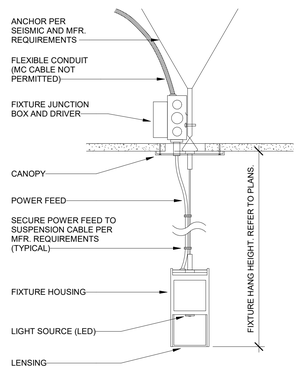

TYPICAL POWER FEED DETAIL

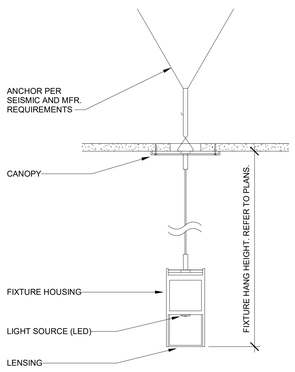

TYPICAL NON-POWER FEED DETAIL

4 PENDANT MOUNTING DETAIL
SCALE: N.T.S.

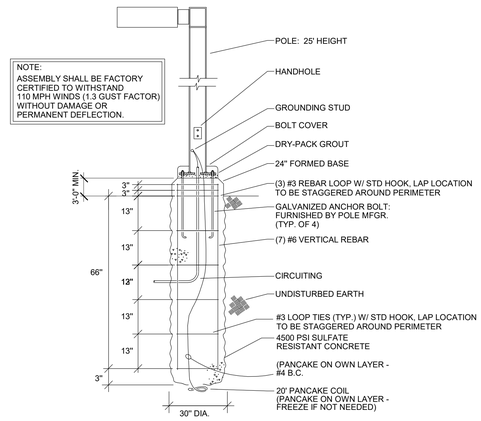

3 LIGHT POLE DETAIL
SCALE: N.T.S.

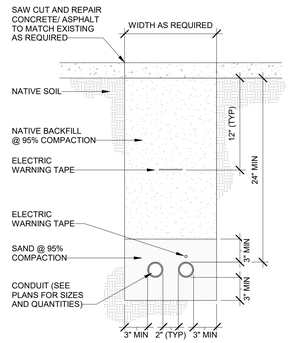

2 TRENCH DETAIL
SCALE: N.T.S.

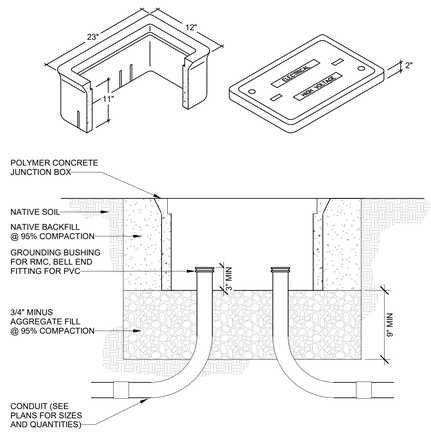

1 PULL BOX DETAIL
SCALE: N.T.S.

Kimley»Horn

7900 RANCHARRAH PARKWAY
SUITE 100
RENO, NV 89511
PHONE: 775.787.7552
2023 ©

This document is an instrument of service prepared solely for Kimley-Horn's client and for a particular purpose. Any other use or reliance is without liability to Kimley-Horn.

SEALS

PRELIMINARY
FOR REVIEW ONLY
NOT FOR RECORDATION PURPOSES
Kimley»Horn
ENGINEER _____
PE NO. _____ DATE _____

WEST WENDOVER FIRE STATION #13

1121 N. GENE L. JONES WAY

CLIENT PROJECT INFO

NO:	DATE	DRAWING ISSUE DESCRIPTION

DESIGNED BY: JPN
DRAWN BY: JPN
CHECKED BY: JDB
SCALE: As indicated
DATE: 5/01/2023
PROJECT NO: 092767002
FILENAME: _____

ELECTRICAL DETAILS

E602

BIM 360://092767002-Wendover Fire Station/Wendover FS MEP.rvt
5/3/2023 10:32:05 AM

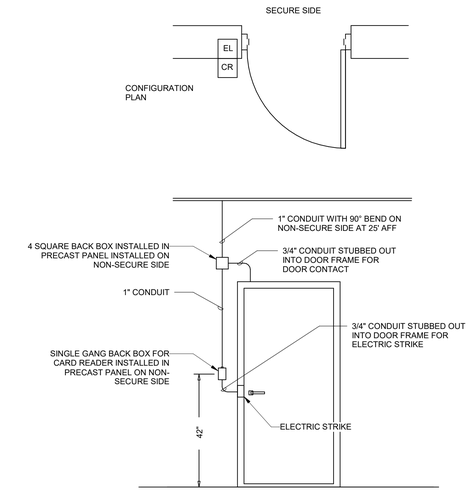

NOTE: ALL CONDUITS AND BACK BOXES SHALL BE CONCEALED IN THE WALL DURING CONSTRUCTION WHERE POSSIBLE.

FUNCTIONALITY:
IN THE NORMAL STATE THE DOOR IS CLOSED, LOCKED ON THE UNSECURED SIDE AND UNLOCKED ON THE SECURED SIDE. DOOR SHALL FAIL SECURE.

1 ACCESS CONTROL - SECURE IN SINGLE DOOR DETAIL

N.T.S

Kimley»Horn

7900 RANCHARRAH PARKWAY
SUITE 100
RENO, NV 89511
PHONE: 775.787.7552
2023 ©

This document is an instrument of service prepared solely for Kimley-Horn's client and for a particular purpose. Any other use or reliance is without liability to Kimley-Horn.

SEALS

PRELIMINARY
FOR REVIEW ONLY
NOT FOR RECORDATION PURPOSES
Kimley»Horn
ENGINEER _____
PE NO. _____ DATE _____

WEST WENDOVER FIRE STATION #13

1121 N. GENE L. JONES WAY

CLIENT PROJECT INFO

NO:	DATE	DRAWING ISSUE DESCRIPTION

DESIGNED BY: JPN
DRAWN BY: JPN
CHECKED BY: JDB
SCALE: 12" = 1'-0"
DATE: 5/01/2023
PROJECT NO: 092767002
FILENAME:

ELECTRICAL DETAILS

E603

5/3/2023 10:32:06 AM BIM 360://092767002-Wendover Fire Station/Wendover FS MEP.rvt

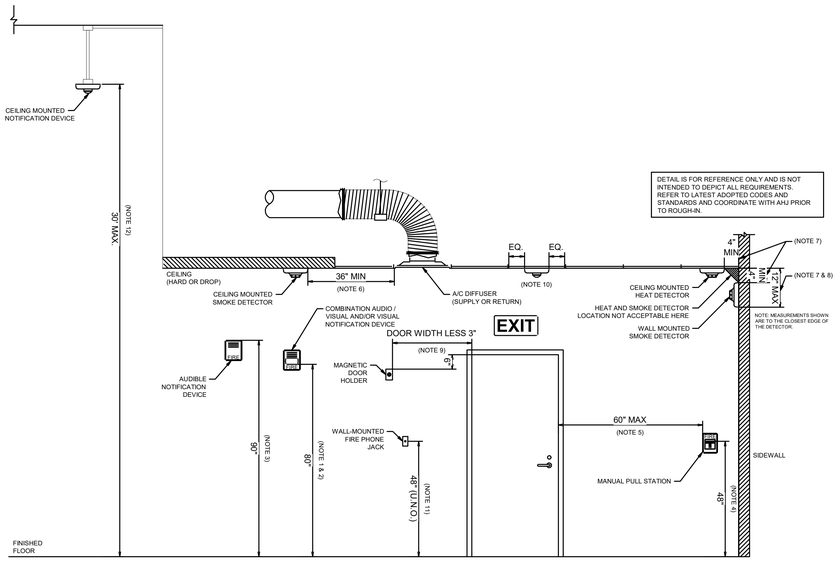

NOTES:
1. 80" ABOVE THE HIGHEST FLOOR LEVEL WITHIN THE SPACE OR 6" BELOW THE CEILING, WHICHEVER IS LOWER.
2. 80" MIN AND 96" MAX ABOVE FINISHED FLOOR.
3. 90" MIN ABOVE FINISHED FLOOR AND 6" MIN BELOW FINISHED CEILING.
4. TOP OF OPERATING HANDLE SHALL BE 48" MAX ABOVE FINISHED FLOOR FOR FORWARD REACH, 54" MAX ABOVE FINISHED FLOOR FOR SIDE REACH, AND 15" MIN ABOVE FINISHED FLOOR.
5. WITHIN 60" OF EXIT DOORWAYS.
6. DO NOT LOCATE IN A DIRECT AIRFLOW OR CLOSER THAN 38" MIN FROM AN AIR SUPPLY DIFFUSER OR RETURN AIR OPENING.
7. HEAT DETECTORS: 4" MIN FROM THE SIDEWALL OR BETWEEN 4" AND 12" FROM CEILING.
8. SMOKE DETECTORS: 12" MAX DOWN FROM CEILING.
9. REFER TO MANUFACTURER'S INSTALLATION MANUAL FOR SPECIFIC REQUIREMENTS AND MODIFY ACCORDINGLY.
10. CENTER CEILING MOUNTED DEVICES IN CEILING TILES.
11. NOT LESS THAN 36" AND NOT MORE THAN 66" ABOVE FLOOR LEVEL WITH CLEAR ACCESS TO THE APPLIANCE THAT IS AT LEAST 30" WIDE.
12. NOTIFICATION DEVICES SHALL NOT BE MOUNTED ABOVE +30' AFF. PROVIDE MOUNTING APPARATUS AS REQUIRED.

3 FIRE ALARM DEVICE MOUNTING HEIGHTS
SCALE: N.T.S.

MAXIMUM ROOM SIZE (FT)	MAXIMUM LENS HEIGHT (FT)	MINIMUM REQUIRED LIGHT OUTPUT (CD) ONE LIGHT PER ROOM
20 X 20	10	15
30 X 30	10	30
40 X 40	10	60
50 X 50	10	95
20 X 20	20	30
30 X 30	20	45
40 X 40	20	80
50 X 50	20	115
20 X 20	30	55
30 X 30	30	75
40 X 40	30	115

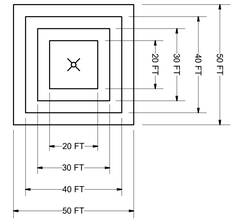

2 ROOM SPACING FOR CEILING-MOUNTED NOTIFICATION DEVICES
SCALE: N.T.S.

SYSTEM INPUTS

		ANNUNCIATION AT LOCAL PANELS				TRANSMIT SIGNALS TO FIRE DEPARTMENT				EVACUATION SIGNALS							AUXILIARY FUNCTION					
		AUDIO-VISUAL FIRE ALARM INDICATION BY ZONE	AUDIO-VISUAL FIRE ALARM INDICATION BY ZONE/MODULE	AUDIO-VISUAL COMMON TROUBLE INDICATION	AUDIO-VISUAL ALARM INDICATION BY DEVICE	COMMON TROUBLE SIGNAL PER BUILDING	COMMON SUPERVISORY SIGNAL PER BUILDING	COMMON FIRE ALARM PER GENERAL AREA	SPRINKLER WATER FLOW PER GENERAL AREA	FACILITY FIRE EVACUATION AUDIO-VISUAL SIGNAL	INDIVIDUAL DWELLING UNIT SOUNDER	INDIVIDUAL DWELLING UNIT SOUNDER BASES (FIRE)	INDIVIDUAL DWELLING UNIT SOUNDER BASES (CARBON MONOXIDE)	ALL UNITS SOUNDER BASES (FIRE)	ADA UNIT VISUAL STROBE DEVICES	ELEVATOR LOBBY FIRE DOOR RELEASE	ELEVATOR RECALL	ELEVATOR SHUNT TRIP				
FIRE ALARMS		A	B	C	D	E	F	G	H	I	J	K	L	M	N	O	P	Q	R	S	T	U
1	MANUAL FIRE ALARM STATIONS	X						X			X			X	X							
2	SPOT-TYPE SMOKE DETECTORS (EXCLUDING DWELLING UNITS)	X						X			X			X	X							
3	FIXED TEMP & RATE-OF-RISE TYPE HEAT DETECTORS	X						X			X			X	X							
4	WATER FLOW SWITCHES - WET-PIPE	X									X			X	X							
5	NON-ADA DWELLING UNIT SMOKE DETECTOR											X										
6	NON-ADA DWELLING UNIT HEAT DETECTOR											X										
7	ADA DWELLING UNIT SMOKE DETECTOR											X			X							
8	ADA DWELLING UNIT HEAT DETECTOR											X			X		X					
9	ELEVATOR LOBBY SMOKE DETECTOR	X						X			X			X	X	X	X					
10	ELEVATOR SHAFT OR CONTROL ROOM SMOKE DETECTOR	X						X			X			X	X		X					
11	ELEVATOR SHAFT OR CONTROL ROOM HEAT DETECTOR	X						X			X			X	X			X				
12																						
13																						
14																						
SUPERVISORY SIGNALS																						
15	VALVE SUPERVISORY SWITCH - WET-PIPE SPRINKLERS		X				X															
16	VALVE SUPERVISORY SWITCH - SPRINKLERS			X			X															
17	TEMPERATURE MONITORING SYSTEM			X			X															
18	CONTROL COMPONENT COMMON TROUBLE CONDITION		X				X															
19	IN-DUCT SMOKE DETECTORS		X				X															
TROUBLE CONDITIONS																						
20	LOW BATTERY VOLTAGE			X		X																
14	CIRCUIT FAULT		X	X		X																
14	SUPERVISED COMPONENT FAILURE			X		X																
14	AC POWER FAILURE			X		X																
14	DWELLING UNIT CARBON MONOXIDE DETECTION		X	X		X							X									

FIRE ALARM MATRIX NOTES:
1. DWELLING UNIT ALARMS FOR ADA AND NON-ADA UNITS SHALL INITIATE ONLY IN THE RESPECTIVE UNIT WHEN DETECTION (SMOKE OR CO) IS PRESENT IN THAT UNIT.
2. BUILDING ALARMS SHALL ACTIVATE ALL DEVICES IN ALL UNITS.

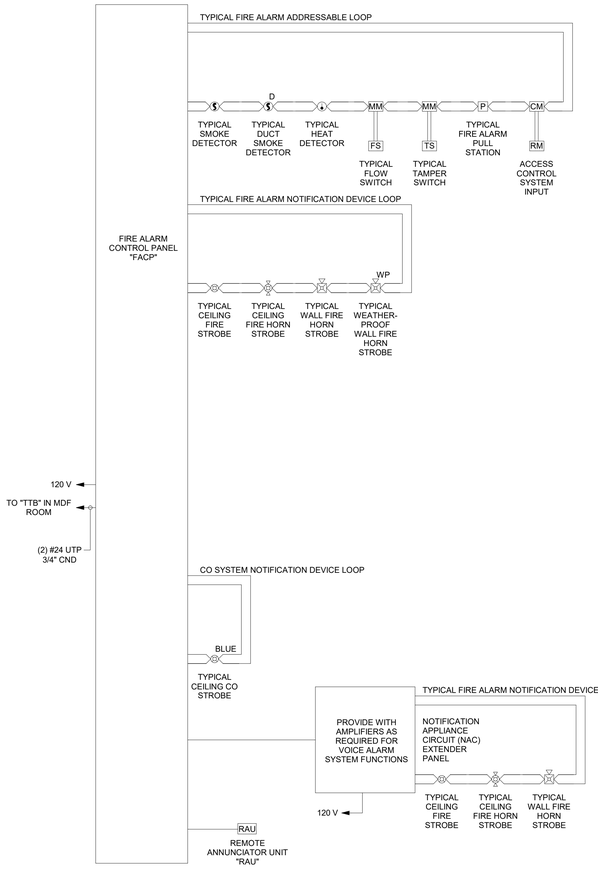

1 EXISTING FIRE ALARM RISER DIAGRAM
SCALE: N.T.S.

FIRE ALARM SYMBOLS

FIRE ALARM		MOUNTING (UON)
S	SMOKE DETECTOR.	C
S D	DUCT SMOKE DETECTOR.	FVM
S CO	SMOKE/CO DETECTOR.	FVM
H	HEAT DETECTOR.	C
FS	FLOW SWITCH.	W
TS	TAMPER SWITCH.	W
RM	RELAY MODULE.	FVM
MM	MONITOR MODULE	W
CO	CARBON MONOXIDE DETECTOR.	W
	FIRE STROBE, CEILING MOUNTED.	C
	FIRE HORN STROBE, CEILING MOUNTED.	C
	FIRE LOUDSPEAKER, CEILING MOUNTED.	C
	FIRE STROBE, WALL MOUNTED AT +84" AFF.	W
	FIRE HORN STROBE, WALL MOUNTED AT +84" AFF.	W
	FIRE HORN STROBE, WALL MOUNTED.	C
	FIRE HORN STROBE, WALL MOUNTED.	C
	FIRE HORN STROBE, WALL MOUNTED.	C
WALL	FIRE ALARM CONTROL PANEL, SURFACE MOUNTED.	W

FIRE ALARM GENERAL NOTES

1. FIRE ALARM SYSTEM DESIGN: FIRE ALARM SYSTEM DESIGN AS SHOWN IS CONCEPTUAL. LOCATION AND QUANTITY OF LIFE SAFETY EQUIPMENT AND FIELD DEVICES DEPICTED ON DRAWINGS ARE RECOMMENDATIONS TO CONTRACTOR FOR BIDDING PURPOSES ONLY. FIRE ALARM CONTRACTOR IS RESPONSIBLE FOR PROVIDING THE FINAL DESIGN IN ACCORDANCE WITH APPLICABLE CODES AND LOCAL REQUIREMENTS. EXACT ROUTING OF CONDUIT TO SUIT CONDITIONS. ALL CHANGES SHALL BE CLEARLY INDICATED ON THE RECORD DRAWINGS. REFER TO THE PROJECT SPECIFICATIONS FOR ADDITIONAL REQUIREMENTS.
2. PERMIT: FIRE ALARM CONTRACTOR IS RESPONSIBLE FOR OBTAINING A SEPARATE FIRE ALARM PERMIT AND PROVIDING A DETAILED SET OF SHOP DRAWINGS FOR APPROVAL BY ENGINEER AND LOCAL FIRE MARSHAL PRIOR TO START OF SYSTEM INSTALLATION AS REQUIRED BY THE MUNICIPALITY. SHOP DRAWINGS FOR THE FIRE ALARM SYSTEM(S) SHALL INCLUDE NOT LESS THAN THE MINIMUM REQUIRED DOCUMENTATION PER LOCAL FIRE MARSHAL AND NFPA 72.
3. SUBMITTALS: PROVIDE THE FOLLOWING DOCUMENTS FOR REVIEW AND APPROVAL:
   A. FLOOR PLAN LAYOUT INDICATING FINAL DEVICE LOCATIONS, INCLUDING CANDELA RATINGS FOR ALARM NOTIFICATION APPLIANCES, AND USE OF ALL ROOMS.
   B. BATTERY CAPACITY CALCULATIONS INDICATING REQUIRED AND SPARE CAPACITY.
   C. NOTIFICATION APPLIANCE CIRCUIT CALCULATIONS AND VOLTAGE DROP CALCULATIONS (FOR THE SYSTEM TO BE INSTALLED).
   D. EQUIPMENT CUT SHEETS WITH CATALOG NUMBERS AND DESCRIPTIONS CLEARLY HIGHLIGHTED TO SPECIFICALLY INDICATE WHICH PRODUCTS ARE PROPOSED FOR USE.
   E. RISER DIAGRAM.
   F. WRITTEN NARRATIVE PROVIDING INTENT AND SYSTEM DESCRIPTION.
   G. SEQUENCE OF OPERATION IN EITHER AN INPUT/OUTPUT MATRIX OR NARRATIVE FORM.
4. COORDINATION: COORDINATE INSTALLATION W/ OTHER TRADES. REFER TO THE ARCHITECTURAL PLANS FOR DIMENSIONS, ROOM FINISHES, FIRE WALLS, DOOR HARDWARE SCHEDULES AND LIKE ITEMS. REFER TO THE STRUCTURAL DRAWINGS FOR STRUCTURAL MEMBERS. REFER TO OTHER TRADES PLANS TO UNDERSTAND THE EXTENT OF THEIR WORK AS REQUIRED. REPORT ANY DISCREPANCIES TO THE ENGINEER FOR CLARIFICATION.
5. REGULATIONS: FIRE ALARM SYSTEMS SHALL BE INSTALLED IN ACCORDANCE WITH LOCAL FIRE MARSHAL REQUIREMENTS, MANUFACTURER'S WRITTEN INSTRUCTIONS, RECOGNIZED INDUSTRY PRACTICES, AND THE LATEST ADOPTED OF ALL APPLICABLE CODES AND REGULATIONS SUCH AS NFPA 72, NFPA 70, NFPA 101, AND ADA. FURNISH AND INSTALL ALL FIRE ALARM EQUIPMENT, RACEWAY SYSTEM, CONDUCTORS, DEVICES, AND ALL OTHER ACCESSORIES AS REQUIRED TO PROVIDE A COMPLETE AND FULLY FUNCTIONAL FIRE ALARM SYSTEM. SYSTEMS AND COMPONENTS SHALL BE LISTED AND APPROVED FOR THE PURPOSE FOR WHICH THEY ARE INSTALLED. FOLLOW MANUFACTURER CUT SHEET AS APPROPRIATE.
6. AUDIBLE NOTIFICATIONS: AUDIBLE ALARM NOTIFICATION APPLIANCES SHALL BE OF SUCH CHARACTER AND SO LOCATED, AS TO BE CLEARLY HEARD THROUGHOUT AND ABOVE AMBIENT NOISE LEVELS.
7. NOTIFICATION APPLIANCES: NOTIFICATION APPLIANCES MAY BE OF CONVENTIONAL OR ADDRESSABLE TYPE. FOR ADDRESSABLE APPLIANCES, PROVIDE LABELS WITH ASSIGNED ADDRESS ON BOTH THE DETECTOR HOUSING AND THE BASE WITH A BLACK ON CLEAR TYPED LABEL. THE BASE ADDRESS SHALL BE LEGIBLE WITHOUT REMOVAL OF THE DETECTOR. THE DETECTOR ADDRESS SHALL BE CONCEALED WITH PLACED INTO THE BASE.
8. POWER SUPPLY: THE PRIMARY AND SECONDARY POWER SUPPLY FOR THE FIRE ALARM SYSTEM SHALL BE PROVIDED IN ACCORDANCE WITH NFPA 72.
9. SPARE: CIRCUITS SHALL CONTAIN AT LEAST 20 PERCENT SPARE CAPACITY FOR NOTIFICATION APPLIANCES ON THE NAC AND/OR AMPLIFIER CIRCUITS AND 20 PERCENT SPARE CAPACITY FOR INITIATING DEVICES ON THE SLC.
10. MANUALS: PROVIDE THE OWNER WITH A COMPLETE FIRE ALARM SYSTEM OPERATIONS AND INSTALLATION MANUAL COVERING ALL SYSTEM EQUIPMENT INSTALLED FOR THIS PROJECT. KEEP AT THE MAIN FIRE ALARM CONTROL PANEL.
11. TERMINATIONS: CONNECTIONS AND SPLICES SHALL BE MADE USING SCREW TERMINAL BLOCKS. THE USE OF WIRE NUT TYPE CONNECTORS IS PROHIBITED IN THE SYSTEM.
12. RACEWAY AND WIRING: PATHWAY SHALL BE INSTALLED IN EMT IN THE MANUFACTURING AREAS OF THE PLANT AND WITHIN WALLS AND WHERE INACCESSIBLE WITHIN THE OFFICES AREAS. CABLING SHALL BE PROTECT FROM DAMAGE AND SECURED IN OPEN PATHWAYS USING CABLE TRAY OR J-HOOKS. EXPOSED EMT CONDUIT SHALL BE PAINTED RED ENAMEL. CONTRACTOR SHALL COORDINATE ROUTINGS WITHIN THESE EXPOSED AREAS TO PRODUCE A SYMMETRIC AND AESTHETIC LAYOUT.
13. CERTIFICATION: CERTIFY INSTALLATION WITH THE SUCCESSFUL COMPLETION OF ALL ASSOCIATED NFPA 72 TESTS AND MEASURE SOUND PRESSURE LEVELS IN ALL ROOMS (IF APPLICABLE) WITHIN THE SCOPE OF THIS PROJECT.
14. TESTING: SYSTEMS SHALL BE TESTED IN ACCORDANCE WITH NFPA REQUIREMENT. THE OWNER'S REPRESENTATIVE AND AHJ SHALL BE PRESENT FOR THE TEST. THE CONTRACTOR SHALL CARRY ALL COSTS ASSOCIATED WITH FINAL CONNECTIONS, PROGRAMMING AND TESTING AS WELL AS DISABLING CONNECTIONS TO THE MUNICIPAL LOOP DURING FINAL CONNECTIONS AND TESTING. EQUIPMENT NOT OPERATING CORRECTLY SHALL BE FIELD CORRECTED OR REPLACED.
15. WARRANTY: CONTRACTOR SHALL WARRANTY ALL WORKMANSHIP AND MATERIALS FOR ONE YEAR FROM FINAL INSPECTION.
16. KNOX BOX: THE ACCESS BOX(ES) SHALL BE OF AN APPROVED TYPE LISTED IN ACCORDANCE WITH UL 1037.
17. ACCESS CONTROL: ACCESS CONTROL SYSTEMS ALONG WITH THE PATH OF EGRESS SHALL BE DESIGNED FOR FIRE-RATED APPLICATION.
18. ELECTRIC GATES: ELECTRIC GATES SHALL BE EQUIPPED WITH A MEANS OF OPENING THE GATE BY FIRE DEPARTMENT PERSONNEL FOR EMERGENCY ACCESS. EMERGENCY OPENING DEVICES SHALL BE APPROVED BY THE FIRE CODE OFFICIAL.
19. ACCESS-CONTROLLED EGRESS DOOR: ACTIVATION OF THE BUILDING FIRE ALARM SYSTEM SHALL AUTOMATICALLY UNLOCK THE DOOR LEAVES IN THE DIRECTION OF EGRESS, AND THE DOOR LEAVES SHALL REMAIN UNLOCKED UNTIL THE FIRE ALARM CONDITION IS MANUALLY RESET.
20. SUPERVISION AND ALARMS: ALL VALVES CONTROLLING THE WATER SUPPLY FOR AUTOMATIC SPRINKLER SYSTEMS, PUMPS, TANKS, WATER LEVELS AND TEMPERATURES, CRITICAL AIR PRESSURE, AND WATERFLOW SWITCHES ON ALL SPRINKLER SYSTEMS SHALL BE ELECTRICALLY SUPERVISED BY A LISTED FIRE ALARM CONTROL UNIT.
21. MONITORING: ACTUATION OF THE AUTOMATIC SPRINKLER SYSTEM SHALL ACTUATE THE BUILDING FIRE ALARM SYSTEM.
22. DUCT SMOKE DETECTORS: DUCT SMOKE DETECTORS ARE REQUIRED TO BE CONNECTED TO THE FIRE ALARM AND SIGNALING SYSTEM AND SHALL INITIATE A SUPERVISORY SIGNAL. SMOKE DETECTORS MOUNTED IN THE AIR DUCTS OF HVAC SYSTEMS IN A FIRE ALARM SYSTEM WITHOUT A CONSTANTLY ATTENDED LOCATION OR SUPERVISING STATION SHALL BE PERMITTED TO INITIATE AN ALARM SIGNAL.

Kimley»Horn
7900 RANCHARRAH PARKWAY
SUITE 100
RENO, NV 89511
PHONE: 775.787.7552

2023 ©

This document is an instrument of service prepared solely for Kimley-Horn's client and for a particular purpose. Any other use or reliance is without liability to Kimley-Horn.

SEALS

PRELIMINARY
FOR REVIEW ONLY
NOT FOR RECORDATION PURPOSES
Kimley»Horn
ENGINEER _____
PE NO. _____ DATE _____

WEST WENDOVER FIRE STATION #13

1121 N. GENE L. JONES WAY

CLIENT PROJECT INFO

NO:	DATE	DRAWING ISSUE DESCRIPTION

DESIGNED BY: JPN
DRAWN BY: JPN
CHECKED BY: JDB
SCALE: As indicated
DATE: 5/01/2023
PROJECT NO: 092767002
FILENAME:

FIRE ALARM RISER DIAGRAM

F000

5/3/2023 13:32:06 AM BIM 360://092767002/Wendover Fire Station/Wendover FS MEP.rvt

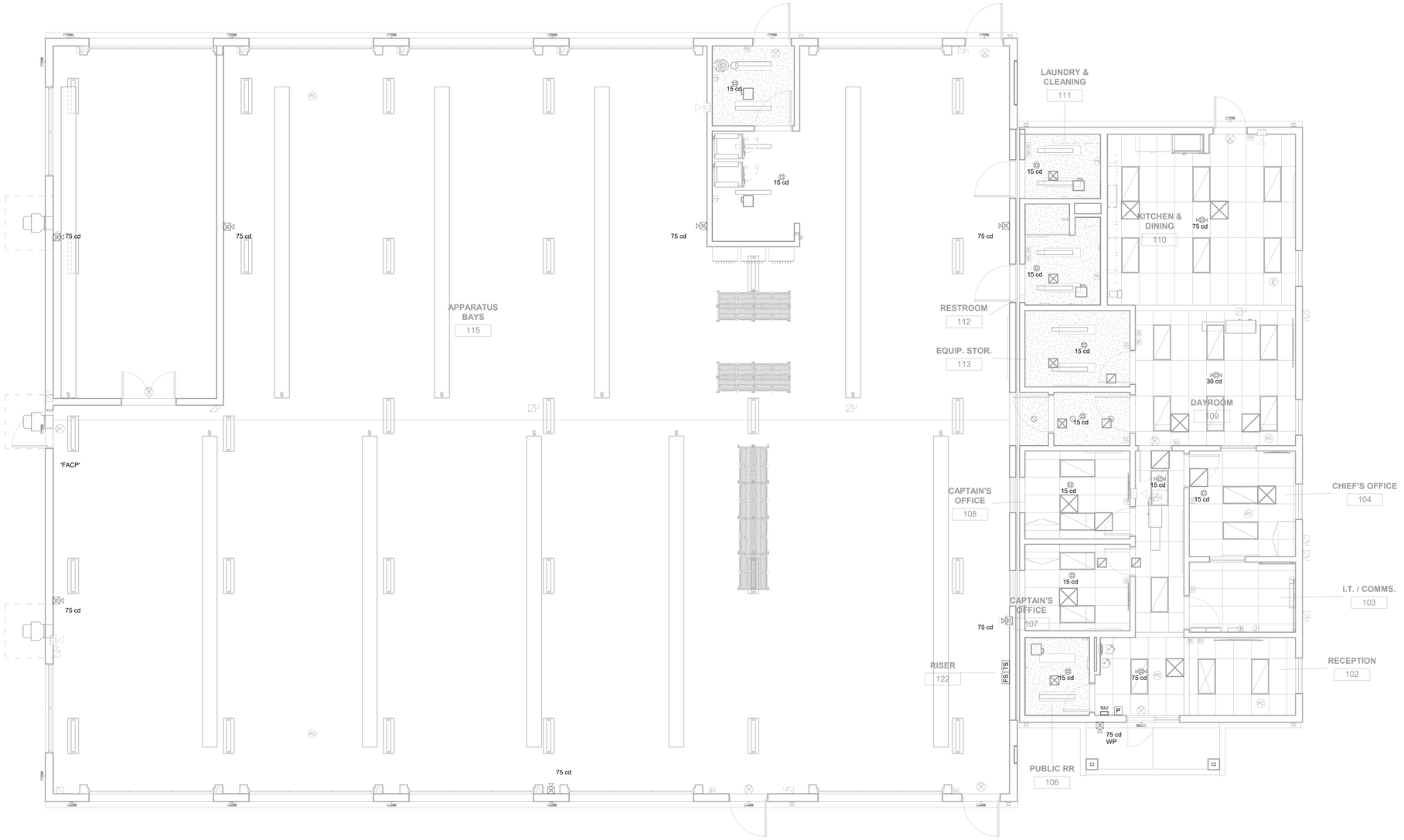

1 FIRE ALARM PLAN

3/16" = 1'-0"

Kimley»Horn

7900 RANCHARRAH PARKWAY
SUITE 100
RENO, NV 89511
PHONE: 775.787.7552
2023 ©

This document is an instrument of service prepared solely for Kimley-Horn's client and for a particular purpose. Any other use or reliance is without liability to Kimley-Horn.

SEALS

PRELIMINARY
FOR REVIEW ONLY
NOT FOR RECORDATION PURPOSES
Kimley»Horn
ENGINEER _____
PE NO. _____ DATE _____

WEST WENDOVER FIRE STATION #13

1121 N. GENE L. JONES WAY

CLIENT PROJECT INFO

NO.	DATE	DRAWING ISSUE DESCRIPTION

DESIGNED BY: JPN
DRAWN BY: JPN
CHECKED BY: JDB
SCALE: 3/16" = 1'-0"
DATE: 5/01/2023
PROJECT NO: 092767002
FILENAME:

FIRE ALARM PLAN

F101

5/3/2023 10:32:06 AM BIM 360://092767002-Wendover Fire Station/Wendover FS MEP.rvt

NUCOR
BUILDING SYSTEMS
A DIVISION OF NUCOR CORPORATION

PROJECT NUMBER: U23G0555A
PROJECT NAME: WENDOVER FS #13 REPLACEMENT
PROJECT LOCATION: WENDOVER, NV COUNTY: ELKO
CUSTOMER: MICHAEL CLAY CORPORATION

MBMA MEMBER
IAS ACCREDITED AC 472
CSSBI
CWB CERTIFIED CSA W47.1
CWB

APPROVAL ORDER

THESE DRAWINGS MUST BE RETURNED SIGNED BY YOU (ON NUCOR'S STAMP) WITH THE CORRECT STATUS OF THE DRAWINGS INDICATED. THE DRAWINGS SHOULD EITHER BE MARKED, "APPROVED WITHOUT EXCEPTION", "APPROVED AS NOTED", OR "NOT APPROVED – REVISE AND RESUBMIT". WHEN AN ARCHITECT IS INVOLVED AND HIS/HER STAMP IS REQUIRED TO SHOW THE STATUS OF THE DRAWINGS, **WE STILL REQUIRE YOUR SIGNATURE AND STATUS AS WELL.**

KEEP IN MIND THAT NBS WILL NOT PURCHASE ANY SPECIAL MATERIAL FOR THIS PROJECT UNTIL THE APPROVAL DRAWINGS ARE RETURNED AND APPROVED. ITEMS OF THIS NATURE INCLUDE (BUT ARE NOT LIMITED TO) CRANE STEEL, SPECIAL COLOR COILS, WALK DOORS, WINDOWS, CURBS, ETC. ONCE THE APPROVALS HAVE BEEN RETURNED A CHANGE ORDER WILL FOLLOW CONFIRMING ANY SCOPE CHANGES, COST CHANGES, AND A FINAL DELIVERY SCHEDULE.

THIS BOX NEEDS TO BE FILLED IN COMPLETELY BEFORE NUCOR CAN PROCEED.

THESE DRAWINGS ARE FOR APPROVAL USE ONLY. FINAL DETAILING AND FABRICATION HAVE NOT YET BEEN SCHEDULED. YOUR PRICE IS PROTECTED BASED ON THE MUST SHIP BY DATE LISTED ON THE ORDER CONTRACT. PLEASE RETURN THE APPROVED DRAWINGS NO LATER THAN **08/14/2023** SO WE CAN BEGIN FINAL DETAILING AND DETERMINE A DELIVERY SCHEDULE. FAILURE TO RETURN THE DRAWINGS BY THE DATE SHOWN ABOVE MAY VOID PRIOR SCHEDULE COMMITMENTS AND POSSIBLY RESULT IN AN INCREASE IN PRICE BASED ON THE MUST SHIP BY DATE.

☐ APPROVED WITHOUT EXCEPTION
☐ APPROVED AS NOTED
☐ NOT APPROVED, REVISE AND RESUBMIT

CUSTOMER'S SIGNATURE: _____

DATE: _____

PLEASE VERIFY/SUPPLY INFORMATION ON SHEETS:

STRUCTURAL/SHEETING DRAWINGS **E1 – E12**

DETAILS **D1 – D20**

ISSUE	DWN	CHK	ENG	PE	DATE
CONST. AB PLAN	NBS	EOP	CBM		7/24/2023
BUILDING DEPARTMENT REVIEW	WBS	DAN	CBM		7/31/2023

NUCOR BUILDING SYSTEMS
300 INDUSTRIAL PARKWAY, WATERLOO, IN 46793
PHONE: (260) 837-7891 FAX: (260) 837-7384
PO BOX 1006, 200 WHETSTONE RD, SWANSEA, SC 29160
PHONE: (803) 568-2100 FAX: (803) 568-2121
600 APACHE TRAIL, TERRELL, TX 75160
PHONE: (972) 524-4400 FAX: (972) 524-4417
1050 WATERY LANE, BRIGHAM CITY, UT 84302
PHONE: (435) 919-3100 FAX: (435) 919-3101

PROJECT NAME: WENDOVER FS #13 REPLACEMENT
WENDOVER, NV
CUSTOMER NAME: MICHAEL CLAY CORP
WINNEMUCCA, NV
JOB NUMBER: U23G0555A
SHEET TITLE

This set contains only 1 No. materials and is issued by Nucor Corporation Building Systems, a division of Nucor Corporation. The drawings and the information shown thereon are the product of Nucor Building Systems's engineering staff and these drawings is employed by Nucor Buildings Systems and does not serve as a certified engineering document of record and shall not be construed as such.

SHEET: DWGCOVER2

GENERAL NOTES:

1. MATERIALS — ASTM DESCRIPTION

MATERIAL	ASTM DESCRIPTION
STRUCTURAL STEEL PLATE	A529 / A572 / A1011
HOT ROLLED MILL SHAPES	A36 / A529 / A500
HHS ROUND	A500
HHS RECTANGULAR	A500
COLD FORM SHAPES	A653 / A1011
ROOF AND WALL SHEETING	A653 / A792
BOLTS	A307 / A325 / A490
CABLE	A475
RODS	A529 / A572

2. STRUCTURAL PRIMER NOTE:

SHOP COAT PRIMER IS INTENDED TO PROTECT THE STEEL FRAMING FOR A SHORT PERIOD OF TIME. STORAGE IN EXTREME COLD TEMPERATURES OR WINTER SNOW CONDITIONS, INCLUDING TRANSPORTATION ON SALTED OR CHEMICALLY TREATED ROADS WILL ADVERSELY AFFECT THE DURABILITY AND LONGEVITY OF THE PRIMER. THE COAT OF SHOP PRIMER DOES NOT PROVIDE THE UNIFORMITY OF APPEARANCE, OR THE DURABILITY AND CORROSION RESISTANCE OF A FIELD APPLIED FINISH COAT OF PAINT OVER A SHOP PRIMER. MINOR ABRASIONS TO THE SHOP COAT PRIMER CAUSED BY HANDLING, LOADING, SHIPPING, UNLOADING AND ERECTION ARE UNAVOIDABLE AND ARE NOT THE RESPONSIBILITY OF THE METAL BUILDING MANUFACTURER. METAL BUILDING MANUFACTURER IS NOT RESPONSIBLE FOR THE DETERIORATION OF THE PRIMER OR CORROSION THAT MAY RESULT FROM ATMOSPHERIC AND ENVIRONMENTAL CONDITIONS NOR THE COMPATIBILITY OF THE PRIMER TO ANY FIELD APPLIED COATING.

3. BUILDING ERECTION NOTES:

THE GENERAL CONTRACTOR AND/OR ERECTOR IS RESPONSIBLE TO SAFELY AND PROPERLY ERECT THE METAL BUILDING SYSTEM IN CONFORMANCE WITH THESE DRAWINGS, OSHA REQUIREMENTS, AND EITHER MBMA OR CSA S16 STANDARDS PERTAINING TO PROPER ERECTION. TEMPORARY SUPPORTS SUCH AS GUYS, BRACES, FALSEWORK, CRIBBING OR OTHER ELEMENTS FOR ERECTION ARE TO BE DETERMINED, FURNISHED AND INSTALLED BY THE ERECTOR. THESE SUPPORTS MUST SECURE THE STEEL FRAMING, OR PARTLY ASSEMBLED STEEL FRAMING, AGAINST LOADS COMPARABLE IN INTENSITY TO THOSE FOR WHICH THE STRUCTURE WAS DESIGNED IN ADDITION TO LOADS RESULTING FROM THE ERECTION OPERATION. SECONDARY WALL AND ROOF FRAMING (PURLINS, GIRTS AND/OR JOIST) ARE NOT DESIGNED TO FUNCTION AS A WORKING PLATFORM OR TO PROVIDE AS AN ANCHORAGE POINT FOR A FALL ARREST /SAFETY TIE OFF.

4. SPECIAL INSPECTION:

SPECIAL INSPECTIONS AND TESTING THAT MAY BE REQUIRED BY GOVERNMENTAL OR OTHER AUTHORITY DURING CONSTRUCTION AND/OR STEEL FABRICATION (COLLECTIVELY, "INSPECTIONS") ARE NOT THE RESPONSIBILITY OF THE PEMB MANUFACTURER, AND TO THE EXTENT REQUIRED IT SHALL BE THE RESPONSIBILITY OF THE OWNER AND/OR THE OWNER'S REPRESENTITIVE. IN THE EVENT INSPECTIONS ARE REQUIRED, THE OWNER AND/OR THE OWNER'S REPRESENTITIVE SHALL EMPLOY A THIRD PARTY QUALITY ASSURANCE TESTING AGENCY APPROVED BY THE RELEVANT AUTHORITY. IF SUCH REQUIREMENTS ARE NOT SPECIFICALLY INCLUDED IN THE PEMB MANUFACTURER'S SALES DOCUMENTS, NO INSPECTIONS BY THE PEMB MANUFACTURER OR AT THE PEMB MANUFACTURER'S FACILITY SHALL BE MADE. THE PEMB MANUFACTURER'S FACILITIES ARE ACCREDITED BY IAS AC472.

5. A325 & A490 BOLT TIGHTENING REQUIREMENTS:

IT IS THE RESPONSIBILITY OF THE ERECTOR TO ENSURE PROPER BOLT TIGHTNESS IN ACCORDANCE WITH APPLICABLE REGULATIONS. FOR PROJECTS IN THE UNITED STATES, SEE THE RCSC SPECIFICATION FOR STRUCTURAL JOINTS USING A325 OR A490 BOLTS OR FOR PROJECTS IN CANADA, SEE THE CAN/CSA S16 LIMIT STATES DESIGN OF STEEL STRUCTURES FOR MORE INFORMATION.

THE FOLLOWING CRITERIA MAY BE USED TO DETERMINE THE BOLT TIGHTNESS (I.E., "SNUG-TIGHT" OR "FULLY-PRETENSIONED"), UNLESS REQUIRED OTHERWISE BY LOCAL JURISDICTION OR CONTRACT REQUIREMENTS:

A) ALL A490 BOLTS SHALL BE "FULLY-PRETENSIONED".
B) ALL A325 BOLTS IN PRIMARY FRAMING (RIGID FRAMES AND BRACING) MAY BE "SNUG-TIGHT", EXCEPT AS FOLLOWS: "FULLY-PRETENSION" A325 BOLTS IF:
   a) BUILDING SUPPORTS A CRANE SYSTEM WITH A CAPACITY GREATER THAN 5 TONS.
   b) BUILDING SUPPORTS MACHINERY THAT CREATES VIBRATION, IMPACT, OR STRESS-REVERSALS ON THE CONNECTIONS. THE ENGINEER-OF-RECORD FOR THE PROJECT SHOULD BE CONSULTED TO EVALUATE FOR THIS CONDITION.
   c) THE PROJECT SITE IS LOCATED IN A HIGH SEISMIC AREA. FOR IBC-BASED CODES, "HIGH SEISMIC AREA" IS DEFINED AS "SEISMIC DESIGN CATEGORY" OF 'D', 'E', OR 'F'. SEE THE "BUILDING LOADS" SECTION ON THIS PAGE FOR THE DEFINED SEISMIC DESIGN CATEGORY FOR THIS PROJECT.
   d) ANY CONNECTION DESIGNATED IN THESE DRAWINGS AS "A325-SC". "SLIP-CRITICAL (SC)" CONNECTIONS MUST BE FREE OF PAINT, OIL, OR OTHER MATERIALS THAT REDUCE FRICTION AT CONTACT SURFACES. GALVANIZED OR LIGHTLY-RUSTED SURFACES ARE ACCEPTABLE.
C) IN CANADA, ALL A325 AND A490 BOLTS SHALL BE "FULLY-PRETENSIONED", EXCEPT FOR SECONDARY MEMBERS (PURLINS, GIRTS, OPENING FRAMING, ETC.) AND FLANGE BRACES.

SECONDARY MEMBERS (PURLINS, GIRTS, OPENING FRAMING, ETC.) AND FLANGE BRACE CONNECTIONS MAY ALWAYS BE "SNUG-TIGHT", UNLESS INDICATED OTHERWISE IN THESE DRAWINGS.

6. GENERAL DESIGN NOTES:

1) ALL STRUCTURAL STEEL SECTIONS AND WELDED PLATE MEMBERS ARE DESIGNED IN ACCORDANCE WITH ANSI/AISC 360 "SPECIFICATIONS FOR STRUCTURAL STEEL BUILDINGS" OR THE CAN/CSA S16 "LIMIT STATES DESIGN OF STEEL STRUCTURES", AS REQUIRED BY THE SPECIFIED BUILDING CODE.
2) ALL WELDING OF STRUCTURAL STEEL IS BASED ON EITHER AWS D1.1 "STRUCTURAL WELDING CODE – STEEL" OR CAN/CSA W59 "WELDED STEEL CONSTRUCTION (METAL ARC WELDING)", AS REQUIRED BY THE SPECIFIED BUILDING CODE.
3) ALL COLD FORMED MEMBERS ARE DESIGNED IN ACCORDANCE WITH ANSI/AISI S100 OR CAN/CSA S136 "SPECIFICATIONS FOR THE DESIGN OF COLD FORMED STEEL STRUCTURAL MEMBERS", AS REQUIRED BY THE SPECIFIED BUILDING CODE.
4) ALL WELDING OF COLD FORMED STEEL IS BASED ON AWS D1.3 "STRUCTURAL WELDING CODE – SHEET STEEL" OR CAN/CSA W59 "WELDED STEEL CONSTRUCTION (METAL ARC WELDING)", AS REQUIRED BY THE SPECIFIED BUILDING CODE.
5) ALL NUCOR BUILDING GROUP FACILITIES ARE IAS AC-472 ACCREDITED FOR DESIGN AND FABRICATION OF METAL BUILDING SYSTEMS. FOR PROJECTS IN CANADA, DESIGN AND FABRICATION ARE DONE ONLY IN FACILITIES THAT ARE ALSO CAN/CSA A660 AND W47.1 CERTIFIED.
6) IF JOISTS ARE INCLUDED WITH THIS PROJECT, THEY ARE SUPPLIED AS A PART OF THE SYSTEMS ENGINEERED METAL BUILDING AND ARE FABRICATED IN ACCORDANCE WITH THE REQUIREMENTS OF SECTION 1926.758 OF THE OSHA SAFETY STANDARDS FOR STEEL ERECTION, DATED JANUARY 18, 2001.
7) COLUMN BASE PLATES ARE DESIGNED NOT TO EXCEED THE ALLOWABLE BEARING STRESS OF CONCRETE THAT HAS A MINIMUM COMPRESSIVE STRENGTH OF 3000 P.S.I. AT 28 DAYS.

BUILDING INFORMATION

PRIMER COLORS

PRIMARY PRIMER COLOR: **RED** SECONDARY PRIMER COLOR: **RED**

ROOF SHEETING

TYPE: **4" IMP CFR42/LS360** GAUGE: **24** FINISH: **TERRA COTTA – PVDF** CLIP TYPE: **SLIDING/SHORT**
THERMAL BLOCKS: **No** EPS FOAM SPACER: **YES (LS360 ONLY)** ROOF LINE TRIM, PAINTED: **TERRA COTTA – PVDF**

- YES ☒ NO ☐ DOWNSPOUTS PAINTED: **TERRA COTTA – PVDF** GUTTERS PAINTED: **TERRA COTTA – PVDF**
- YES ☐ NO ☒ INSULATION ________ (NOT BY MBS)
- YES ☐ NO ☒ PIPE JACKS, SIZE: ________ QUANTITY: ________
- YES ☐ NO ☒ RIDGE VENTS, 10'-0" LONG X 9" THROAT. QUANTITY: ________
- YES ☐ NO ☒ ROOF FRAMED OPENINGS, SEE ROOF FRAMING PLAN FOR SIZES
- YES ☐ NO ☒ COMPOSITE **CFR** DECK, TYPE: ________ GAUGE: ________ FINISH: ________

WALL SHEETING

TYPE: **2.5" SANTA FE** GAUGE: **24** FINISH: **DESERT SAND – PVDF**
CORNER TRIM, PAINTED: **DESERT SAND – PVDF** BASE TRIM, PAINTED: **SURREY BEIGE – PVDF**

- YES ☐ NO ☒ WALKDOORS, QUANTITY: ________ PAINTED: ________
- YES ☐ NO ☒ WINDOWS, QUANTITY: ________ PAINTED: ________
- YES ☐ NO ☒ INSULATION ________ (NOT BY MBS)

WALL FRAMED OPENINGS

YES ☒ NO ☐ FRAMED OPENING TRIM, PAINTED: **SURREY BEIGE – PVDF**

SIZES:
- FSW: **(5) 14'-0" x 14'-0"; (1) 4'-4" x 7'-2"**
- BSW: **(2) 4'-4" x 7'-2"; (5) 14'-0" x 14'-0"**
- LEW: **(2) 10'-0" x 7'-6"; (1) 4'-4" x 7'-2"**
- REW: **(2) 4'-0" x 4'-0" SILL @ 3'-2"; (1) 3'-4" x 7'-2"; (1) 3'-10" x 7'-2"**

BUILDING OPTIONS

YES ☐ NO ☒ LINER PANELS
FRAMED OPENING TRIM, PAINTED: ________
WALL: TYPE: ________ GAUGE: ________ FINISH: ________ WALL TRIM, PAINTED: ________
CEILING: TYPE: ________ GAUGE: ________ FINISH: ________

YES ☐ NO ☒ TRANSLUCENT PANELS
WALL: ________
ROOF: ________
INSULATED PANELS? YES ☐ NO ☐

YES ☐ NO ☒ EAVE EXTENSION
PROJ: ________ TYPE: ________ GAUGE: ____ FINISH: ________ SOFFIT TRIM AT BUILDING LINE PAINTED: ________

YES ☐ NO ☒ RAKE EXTENSION
PROJ: ________ TYPE: ________ GAUGE: ____ FINISH: ________ SOFFIT TRIM AT BUILDING LINE PAINTED: ________

YES ☐ NO ☒ CANOPY
AT EAVE LINE ☐ BELOW EAVE ☐ PROJECTION: ________ CLEAR UNDER CANOPY BEAM: ________
ROOF PANEL: TYPE: ________ ___GAUGE, FINISH: ________
SOFFIT PANEL: TYPE: ________ ___GAUGE, FINISH: ________ SOFFIT TRIM AT BUILDING LINE PAINTED: ________

YES ☐ NO ☒ PARTITION WALLS
WALL PANEL: TYPE: ________ ___GAUGE, FINISH: ________ TRIM PAINTED: ________

YES ☒ NO ☐ WAINSCOT
WALL PANEL: TYPE: **2.5" SANTA FE 24** GAUGE, FINISH: **SURREY BEIGE – PVDF** TOP TRANSITION TRIM PAINTED: **DESERT SAND – PVDF**
BASE TRIM PAINTED: **SURREY BEIGE – PVDF** JAMB TRIM PAINTED: **SURREY BEIGE – PVDF** BOTTOM TRANS. TRIM PAINTED: **SURREY BEIGE – PVDF**

YES ☐ NO ☒ FASCIA
PROJ: ________ TOP OF FASCIA HEIGHT: ________
FACE PANEL, TYPE: ________ ___GAUGE, FINISH: ________ CAP TRIM PAINTED: ________
BACK PANEL, TYPE: ________ ___GAUGE, FINISH: ________ BASE TRIM PAINTED: ________
☐ CLOSED SYSTEM, CLEAR UNDER SOFFIT TRIM: ________
SOFFIT PANEL, TYPE: ________ ___GAUGE, FINISH: ________ SOFFIT TRIM AT BUILDING LINE PAINTED: ________
☐ OPEN SYSTEM, (NO SOFFIT PANEL PROVIDED) CLEAR UNDER SOFFIT TRIM: ________

YES ☐ NO ☒ PARAPET
☐ STRUCTURAL PARAPET ☐ NON-STRUCTURAL PARAPET TOP OF PARAPET HEIGHT: ________
BACK PANEL, TYPE: ________ ___GAUGE, FINISH: ________

YES ☐ NO ☒ CRANES (SEE CRANE PLAN FOR ADDITIONAL INFORMATION)

YES ☐ NO ☒ MEZZANINE (SEE MEZZANINE PLAN FOR ADDITIONAL INFORMATION)

THE DRAWINGS AND THE METAL BUILDING THEY REPRESENT ARE THE PRODUCT OF THE METAL BUILDING MANUFACTURER. THE REGISTERED PROFESSIONAL ENGINEER'S SEAL PERTAINS ONLY TO THE REQUIREMENTS LISTED HEREIN FOR THE MATERIALS DESIGNED AND SUPPLIED BY THE METAL BUILDING MANUFACTURER. THE REGISTERED PROFESSIONAL ENGINEER WHOSE SEAL APPEARS ON THESE DRAWINGS IS EMPLOYED OR ENGAGED BY THE METAL BUILDING MANUFACTURER AND DOES NOT SERVE AS OR REPRESENT THE PROJECT ENGINEER OF RECORD AND SHALL NOT BE CONSTRUED AS SUCH.

7. GLOSSARY OF ABBREVIATIONS:

A.B. = ANCHOR BOLTS
BS = BOTH SIDES
B.U. = BUILT-UP
DIA = DIAMETER
FLG = FLANGE
F.S = FAR SIDE
GA. = GAUGE
H.S.B. = HIGH STRENGTH BOLTS
HT. = HEIGHT
LLV = LONG LEG VERTICAL
MAX = MAXIMUM
M.B. = MACHINE BOLTS
MBS = METAL BUILDING SUPPLIER
TBD = TO BE DETERMINED
N/A = NOT APPLICABLE
NIC = NOT IN CONTRACT
SLV = SHORT LEG VERTICAL
O.A.L. = OVERALL LENGTH
O.C. = ON CENTER
U.N.O. = UNLESS NOTED OTHERWISE
REQ'D = REQUIRED
REV. = REVISION
SIM = SIMILAR
SL = STEEL LINE
N.S. = NEAR SIDE
MIN = MINIMUM
TYP = TYPICAL
PL = PLATE
PEMB = PRE-ENGINEERED METAL BUILDING MANUFACTURER
?? = PART MARK TO BE DETERMINED AND WILL BE UPDATED ON CONSTRUCTION DRAWINGS

NUCOR
BUILDING SYSTEMS
A DIVISION OF NUCOR CORPORATION

MBMA MEMBER — IAS ACCREDITED Metal Building Systems AC 472 — CSSBI — CWB CERTIFIED CSA W47.1 — CWB CERTIFIED CSA A660

BUILDING LOADS

DESIGN CODE: **IBC 2018**
ROOF LIVE LOAD: **20.00** PSF RISK CATEGORY: **IV**
LIVE LOAD REDUCIBLE **Yes**
GROUND SNOW LOAD: **30.0** PSF SNOW EXP. FACTOR, Ce: **1.00**
SNOW IMPORTANCE FACTOR, Is: **1.20**
RAINFALL INTENSITY (IN/HR): **4.00**
WIND: **115 / 89** MPH (Vult) / (Vasd)
C & C PRESSURES (PSF): **32 / -43**
EXPOSURE: **C**
UL 90 **NO**
Classic Roof-Const. No. **161** ; **Classic** Roof w/ Translucent Panel-Const. No. **167**
CFR Roof-Const. No. **552** ; **CFR** Roof w/ Translucent Panel-Const. No. **590** ;
Composite CFR Roof-Const. No. **552A** ; **VR16 II** Roof-Const. No. **332** .
SEISMIC INFORMATION Ss: **0.327** S1: **0.114**
Design Sds/Sd1: **0.335 / 0.180** Site Class: **D**
Seismic Imp. Factor: **1.50** Seismic Design Category: **D**
Analysis Procedure: Equivalent Lateral Force Method
LONG SFRS: **Ord. Concentrically Braced Frame**
LAT SFRS: **Ord. Moment Frame**

NOTES:
1) COLLATERAL DEAD LOADS, UNLESS OTHERWISE NOTED, ARE ASSUMED TO BE UNIFORMLY DISTRIBUTED. WHEN SUSPENDED SPRINKLER SYSTEMS, LIGHTING, HVAC EQUIPMENT, CEILINGS, ETC., ARE SUSPENDED FROM ROOF MEMBERS, CONSULT THE M.B.S. IF THESE CONCENTRATED LOADS EXCEED 500 POUNDS (USING THE WEB MOUNT DETAIL) OR 200 POUNDS (USING THE FLANGE MOUNT DETAIL), OR IF INDIVIDUAL MEMBERS ARE LOADED SIGNIFICANTLY MORE THAN OTHERS.

2) THE DESIGN OF STRUCTURAL MEMBERS SUPPORTING GRAVITY LOADS IS CONTROLLED BY THE MORE CRITICAL EFFECT OF ROOF LIVE LOAD OR ROOF SNOW LOAD, AS DETERMINED BY THE APPLICABLE CODE.

3) Pm IS BASED ON THE MINIMUM ROOF SNOW LOAD CALCULATED PER BUILDING CODE OR THE CONTRACT SPECIFIED SNOW LOAD, WHICHEVER IS GREATER. THIS VALUE, Pm, IS ONLY APPLIED IN COMBINATION WITH THE DEAD AND COLLATERAL LOADS. ROOF SNOW IN OTHER LOADING CONDITIONS IS DETERMINED PER THE SPECIFIED BUILDING CODE.

	BUILDING		
ROOF DEAD (PSF):	4.25	ROOF SNOW Pm (PSF):	24.00
PRI. COL. (PSF):	5.00	WIND ENCLOSURE:	Enclosed
SEC. COL. (PSF):	5.00	GCpi:	+/-0.18
SNOW Ct:	1.00	SEISMIC R:	3.25
SNOW Cs:	1.00	SEISMIC Cs:	0.155
ROOF SNOW Ps (PSF):	25.20	BASE SHEAR (KIPS):	22.96

DRAWING INDEX

COVERSHEET **C1, C2**
ANCHOR BOLT DRAWINGS **AB1, AB2**
STRUCTURAL/SHEETING DRAWINGS **E1 – E12**
DETAILS **D1 – D20**

ISSUE	DWN	CHK	ENG	PE	DATE
CONST. AB PLAN	NBS	EOP	CBM		7/24/2023
BUILDING DEPARTMENT REVIEW	MBS	DAN	CBM		7/31/2023

NUCOR BUILDING SYSTEMS
305 INDUSTRIAL PARKWAY, WATERLOO, IN 46793
PHONE: (260) 837-7891 FAX: (260) 837-7384
PO BOX 1006, 200 WHETSTONE RD, SWANSEA, SC 29160
PHONE: (803) 568-2100 FAX: (803) 568-2121
600 APACHE TRAIL, TERRELL, TX 75160
PHONE: (972) 524-5407 FAX: (972) 524-5417
1050 WATERY LANE, BRIGHAM CITY, UT 84302
PHONE: (435) 919-3100 FAX: (435) 919-3101

PROJECT NAME: WENDOVER FS #13 REPLACEMENT, WENDOVER, NV
CUSTOMER NAME: MICHAEL CLAY CORP, WINNEMUCCA, NV
JOB NUMBER: U23G0555A
SHEET TITLE:

PROFESSIONAL ENGINEER – STATE OF NEVADA — RUSSELL R. SKEEM — 07/31/2023 — Exp. Jun 30, 2024 — CIVIL/STRUCTURAL — No. 016713

This seal pertains only to the materials designed and supplied by Nucor Building Systems, a divisions of Nucor Corporation. The drawings and the metal buildings which they represent are the product of Nucor Building Systems. The register professional engineer whose seal appears on these drawings is employed by Nucor Buildings Systems and does not serve as or represent the project engineer of record and shall not be construed as such.

SHEET: C1 of 2

THE BUILDING CODE REQUIRES CONSIDERATION OF SNOW SURCHARGES FOR ANY LOWER ROOF OF A STRUCTURE LOCATED WITHIN 20 ft. OF A HIGHER STRUCTURE. INFORMATION PROVIDED TO THE METAL BUILDING MANUFACTURER DOES NOT INDICATE THE PRESENCE OF A SHADOWING STRUCTURE WITHIN THIS 20 ft. ENVELOPE, THEREFORE SNOW SURCHARGES HAVE NOT BEEN CONSIDERED IN THE DESIGN.	BCL9
ACCESSORIES (DOORS, WINDOWS, ETC.) NOT PROVIDED BY THE METAL BUILDING MANUFACTURER MUST BE DESIGNED AS "COMPONENTS AND CLADDING" IN ACCORDANCE WITH THE SPECIFIC WIND PROVISIONS OF THE REFERENCED BUILDING CODE DISPLAYED ON THE COVER PAGE OF THIS DRAWING PACKET.	MO1
FRAMED OPENINGS HAVE BEEN DESIGNED TO SUPPORT WIND LOAD NORMAL TO THE WALL BASED ON THE STANDARD BUILDING CODE CRITERIA. FRAMED OPENINGS HAVE NOT BEEN DESIGNED FOR ANY ADDITIONAL MOMENT OR CATENARY FORCES FROM THE DOOR. ANY CHANGE TO THE INFORMATION SHOWN HERE WILL REQUIRE AN ENGINEERING INVESTIGATION AND POSSIBLE BUILDING REINFORCEMENT.	MO2

THE NEW BUILDING IS IN PROXIMITY TO, AND MAY CAUSE CHANGES TO THE CODE-PRESCRIBED SNOW LOADING CONDITIONS FOR THE EXISTING ADJACENT/ADJOINING BUILDING(S). IT IS THE RESPONSIBILITY OF OTHERS (NOT THE METAL BUILDING MANUFACTURER) TO INVESTIGATE ALL SNOW LOADING CONDITIONS FOR THE ADJACENT/ADJOINING BUILDING(S), AND PERFORM ANY REQUIRED ANALYSIS.	EB1
THE EXISTING BUILDING AND THE NEW BUILDING BY THE METAL BUILDING MANUFACTURER ARE STRUCTURALLY INDEPENDENT. THE SEISMIC STORY DRIFT OF THE NEW BUILDING CALCULATED IN ACCORDANCE WITH THE APPLICABLE BUILDING CODE IS 3.00 INCHES. THE METAL BUILDING MANUFACTURER CANNOT DETERMINE THE STORY DRIFT OF THE EXISTING BUILDING. THEREFORE, IT IS THE RESPONSIBILITY OF OTHERS (NOT THE METAL BUILDING MANUFACTURER) TO ENSURE THAT ADEQUATE SEPARATION EXISTS BETWEEN THE NEW AND EXISTING BUILDING.	EB6
THE SPECIFIED HVCF IN THE CONTRACT IS NOT TO EXCEED THE 300 LBS QUOTED AND DESIGNED FOR. IF IT DOES, A REVIEW AND POSSIBLE REDESIGN WILL BE NECESSARY.	SPECIAL NOTE–1

ISSUE	DWN	CHK	ENG	PE	DATE
CONST. AB PLAN	NBS	EOP	CBM		7/24/2023
BUILDING DEPARTMENT REVIEW	WBS	DAN	CBM		7/31/2023

NUCOR BUILDING SYSTEMS
300 INDUSTRIAL PARKWAY, WATERLOO, IN 46793
PHONE: (260) 837-7891 FAX: (260) 837-7384
PO BOX 1006, 200 WHETSTONE RD, SWANSEA, SC 29160
PHONE: (803) 568-2100 FAX: (803) 568-2121
600 APACHE TRAIL, TERRELL, TX 75160
PHONE: (972) 524-4500 FAX: (972) 524-4417
1050 WATER LANE, BRIGHAM CITY, UT 84302
PHONE: (435) 919-3100 FAX: (435) 919-3101

PROJECT NAME
WENDOVER FS #13 REPLACEMENT
WENDOVER, NV

CUSTOMER NAME
MICHAEL CLAY CORP
WINNEMUCCA, NV

JOB NUMBER
U23G0555A

SHEET TITLE

PROFESSIONAL ENGINEER – STATE OF UTAH
RUSSELL R. SKEEM
07/31/2023
Exp. Jun 30, 2024
CIVIL/STRUCTURAL
No. 0167[illegible]

This set of plans prepared by the materials described herein are owned by Nucor Building Systems, a division of Nucor Corporation. The drawings and the materials shown thereon, are and are the product of Nucor Building Systems and are protected by copyright. A licensed professional engineer employed by Nucor Buildings Systems has prepared these drawings and does not serve as a record seal. These drawings are not to be construed as such.

SHEET
C2 of 2

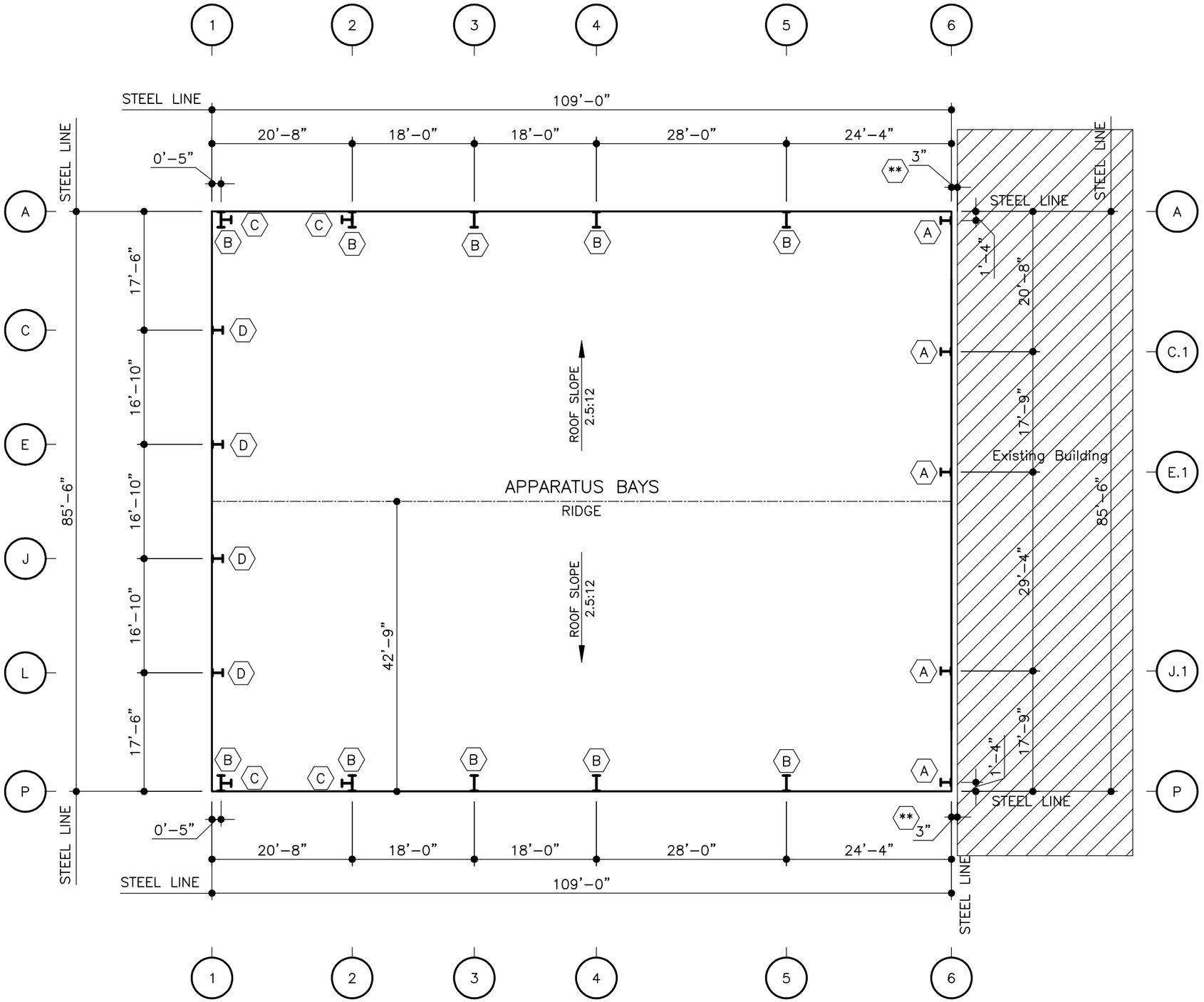

FINISH FLOOR = 100'-0"
BOTTOM OF BASE PLATE = 100'-0"
(UNLESS NOTED OTHERWISE)

ANCHOR BOLT SCHEDULE

QUANTITY	SIZE	MAT'L	PROJECTION
36	3/4"	Gr 55	3" FROM BOTTOM OF BPL
56	1"	Gr 55	3" FROM BOTTOM OF BPL
---	---	---	3" FROM BOT. OF BPL
---	---	---	3" FROM BOT. OF BPL
---	---	---	3" FROM BOT. OF BPL

THE EXISTING BUILDING AND THE NEW BUILDING BY THE METAL BUILDING MANUFACTURER ARE STRUCTURALLY INDEPENDENT. THE SEISMIC STORY DRIFT OF THE NEW BUILDING CALCULATED IN ACCORDANCE WITH THE APPLICABLE BUILDING CODE IS 3.00 INCHES. THE METAL BUILDING MANUFACTURER CANNOT DETERMINE THE STORY DRIFT OF THE EXISTING BUILDING. THEREFORE, IT IS THE RESPONSIBILITY OF OTHERS (NOT THE METAL BUILDING MANUFACTURER) TO ENSURE THAT ADEQUATE SEPARATION EXISTS BETWEEN THE NEW AND EXISTING BUILDING.

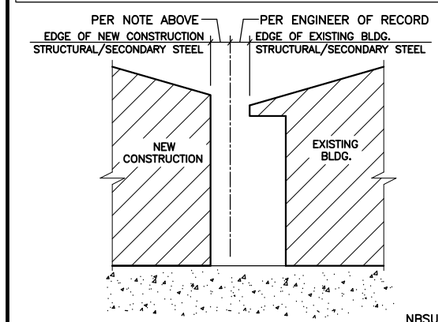

TYPICAL SEISMIC SEPARATION DETAIL (**)

ISSUE	DWN	CHK	ENG	PE	DATE
CONST. AB PLAN	NBS	EOP	CBM		7/24/2023
BUILDING DEPARTMENT REVIEW	WBS	DAN	CBM		7/31/2023

NUCOR BUILDING SYSTEMS
300 INDUSTRIAL PARKWAY, WATERLOO, IN 46793
PHONE: (260) 837-7891 FAX: (260) 837-7384
PO BOX 1005, 200 WHETSTONE RD, SWANSEA, SC 29160
PHONE: (803) 568-2100 FAX: (803) 568-2121
600 APACHE TRAIL, TERRELL, TX 75160
PHONE: (972) 524-4477 FAX: (972) 524-4417
1050 WATER LANE, BRIGHAM CITY, UT 84302
PHONE: (435) 919-3100 FAX: (435) 919-3101

PROJECT NAME
WENDOVER FS #13 REPLACEMENT
WENDOVER, NV

CUSTOMER NAME
MICHAEL CLAY CORP
WINNEMUCCA, NV

JOB NUMBER
U23G0555A

SHEET TITLE

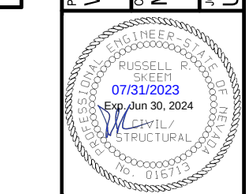

This set of plans and/or specifications is the property of Nucor Building Systems, a division of Nucor Corporation. The drawings and the information shown thereon are not to be used in any way by any party other than an authorized employee of Nucor Building Systems or a registered professional engineer who has been employed by Nucor Building Systems and does not serve as a consultant and/or employee of Nucor and shall not be construed as such.

SHEET

AB1 of 2

ANCHOR BOLT PLAN

GENERAL NOTES

1. THE SPECIFIED ANCHOR ROD DIAMETER ASSUMES F1554 GRADE 55 UNLESS NOTED OTHERWISE. ANCHOR ROD MATERIAL OF EQUAL DIAMETER MEETING OR EXCEEDING THE STRENGTH REQUIREMENTS SET FORTH ON THESE DRAWINGS MAY BE UTILIZED AT THE DISCRETION OF THE FOUNDATION DESIGN ENGINEER. ANCHOR ROD EMBEDMENT LENGTH SHALL BE DETERMINED BY THE FOUNDATION DESIGN ENGINEER.
2. THE METAL BUILDING MFR. IS NOT RESPONSIBLE FOR PROJECT FOUNDATION DESIGN. THE FOUNDATION DESIGN IS THE RESPONSIBILITY OF A REGISTERED PROFESSIONAL ENGINEER, FAMILIAR WITH LOCAL SITE CONDITIONS.
3. ALL ANCHOR RODS, FLAT WASHERS FOR ANCHOR RODS, EXPANSION BOLTS, AS WELL AS ALL CONCRETE/MASONRY EMBED PLATES ARE NOT BY THE METAL BUILDING MFR.
4. THIS DRAWING IS NOT TO SCALE.
5. FINISHED FLOOR ELEVATION = 100'-0" UNLESS NOTED OTHERWISE.
6. "SINGLE" CEE COLUMNS SHALL BE ORIENTED WITH THE "TOES" TOWARD THE LOW EAVE UNLESS NOTED OTHERWISE.
7. THE ANCHOR BOLT LOCATIONS PROVIDED BY THE METAL BUILDING MANUFACTURER SATISFY ANY PERTINENT REQUIREMENTS FOR THE DESIGN OF THE MATERIALS SUPPLIED BY THE METAL BUILDING MANUFACTURER. PLEASE NOTE THAT THESE REQUIREMENTS MAY NOT SATISFY ALL ANCHOR BOLT CONCRETE EDGE DISTANCE REQUIREMENTS DEPENDING ON THE DETAILS OF THE FOUNDATION DESIGN. BECAUSE FOUNDATION DESIGN IS NOT WITHIN THE SCOPE OF WORK OF THE METAL BUILDING MANUFACTURER, IT IS THE RESPONSIBILITY OF THE QUALIFIED PROFESSIONAL DESIGNING THE FOUNDATION TO VERIFY THAT SUFFICIENT CONCRETE EDGE DISTANCE IS PROVIDED FOR THE ANCHOR BOLTS IN THE DETAILS THEREOF.
8. THE ANCHOR BOLT SETTINGS SHOWN ON THESE DRAWINGS NOT ONLY INDICATE WHERE THE ANCHOR BOLTS ARE TO BE PLACED, BUT ALSO THE FOOTPRINT OF THE METAL BUILDING. IT IS ESSENTIAL THAT THESE BOLT PATTERNS BE FOLLOWED. IN THE EVENT THAT THESE SETTINGS DIFFER FROM THE ARCHITECTURAL FOUNDATION PLANS, THE METAL BUILDING MANUFACTURER MUST BE CONTACTED IMMEDIATELY, PREFERABLY BEFORE CONCRETE IS PLACED.

– CROSS BRACING

BERTNOTE

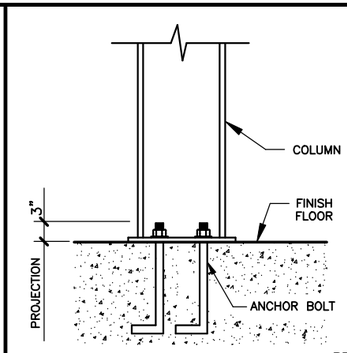

BPFFNG

TYPICAL COLUMN BASE PLATE DETAIL

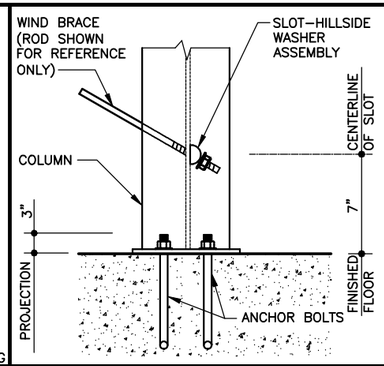

TYPICAL COLUMN BASE PLATE DETAIL AT SLOT–HILLSIDE WASHER LOCATION

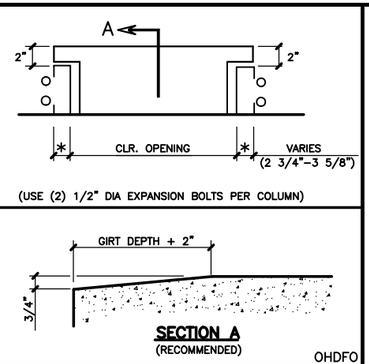

OHDFO

TYPICAL OVERHEAD DOOR FRAMED OPENING

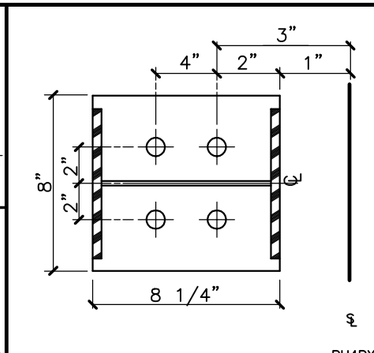

BU4RX

A | (4) 3/4" ø ANCHOR BOLTS WITH A 3" PROJECTION

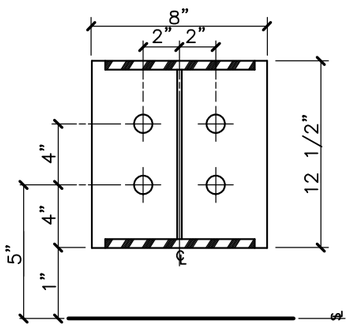

BU4BX

B | (4) 1" ø ANCHOR BOLTS WITH A 3" PROJECTION

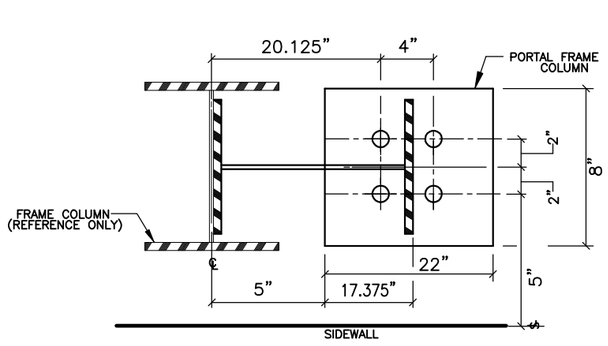

PortalNBR

C | PORTAL COLUMN | (4) 1" ø ANCHOR BOLTS WITH A 3" PROJECTION

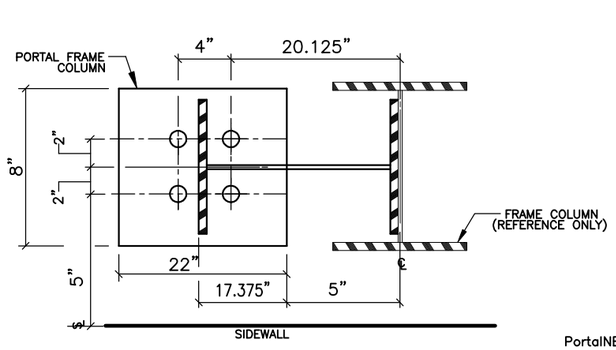

PortalNBL

C | PORTAL COLUMN | (4) 1" ø ANCHOR BOLTS WITH A 3" PROJECTION

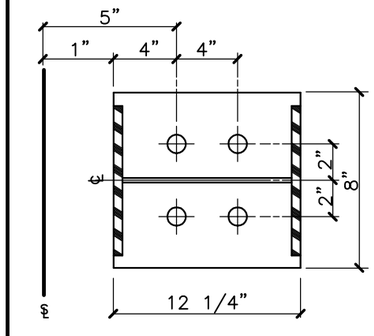

BU4LX

D | (4) 3/4" ø ANCHOR BOLTS WITH A 3" PROJECTION

ISSUE	DWN	CHK	ENG	PE	DATE
CONST. AB PLAN	NBS	EOP	CBM		7/24/2023
BUILDING DEPARTMENT REVIEW	WBS	DAN	CBM		7/31/2023

NUCOR BUILDING SYSTEMS
300 INDUSTRIAL PARKWAY, WATERLOO, IN 46793
PHONE: (260) 837-7891 FAX: (260) 837-7384
PO BOX 1006, 200 WHETSTONE RD, SWANSEA, SC 29160
PHONE: (803) 568-2100 FAX: (803) 568-2121
600 APACHE TRAIL, TERRELL, TX 75160
PHONE: (972) 524-4444 FAX: (972) 524-4417
1050 WATER LANE, BRIGHAM CITY, UT 84302
PHONE: (435) 919-3100 FAX: (435) 919-3101

PROJECT NAME: WENDOVER FS #13 REPLACEMENT
WENDOVER, NV

CUSTOMER NAME: MICHAEL CLAY CORP
WINNEMUCCA, NV

JOB NUMBER: U23G0555A

SHEET TITLE

RUSSELL R. SKEEN — PROFESSIONAL ENGINEER — STATE OF NEVADA — NO. 015713
07/31/2023
Exp. Jun 30, 2024
CIVIL/STRUCTURAL

This set contains and/or its materials are copyrighted by Nucor Building Systems, a division of Nucor Corporation. The drawings and the material and information contained are the property of Nucor Building Systems and/or register professional engineer who has signed and sealed the drawings is employed by Nucor Buildings Systems and does not serve as a consultant and should be treated of record and shall not be construed as such.

SHEET

AB2 of 2

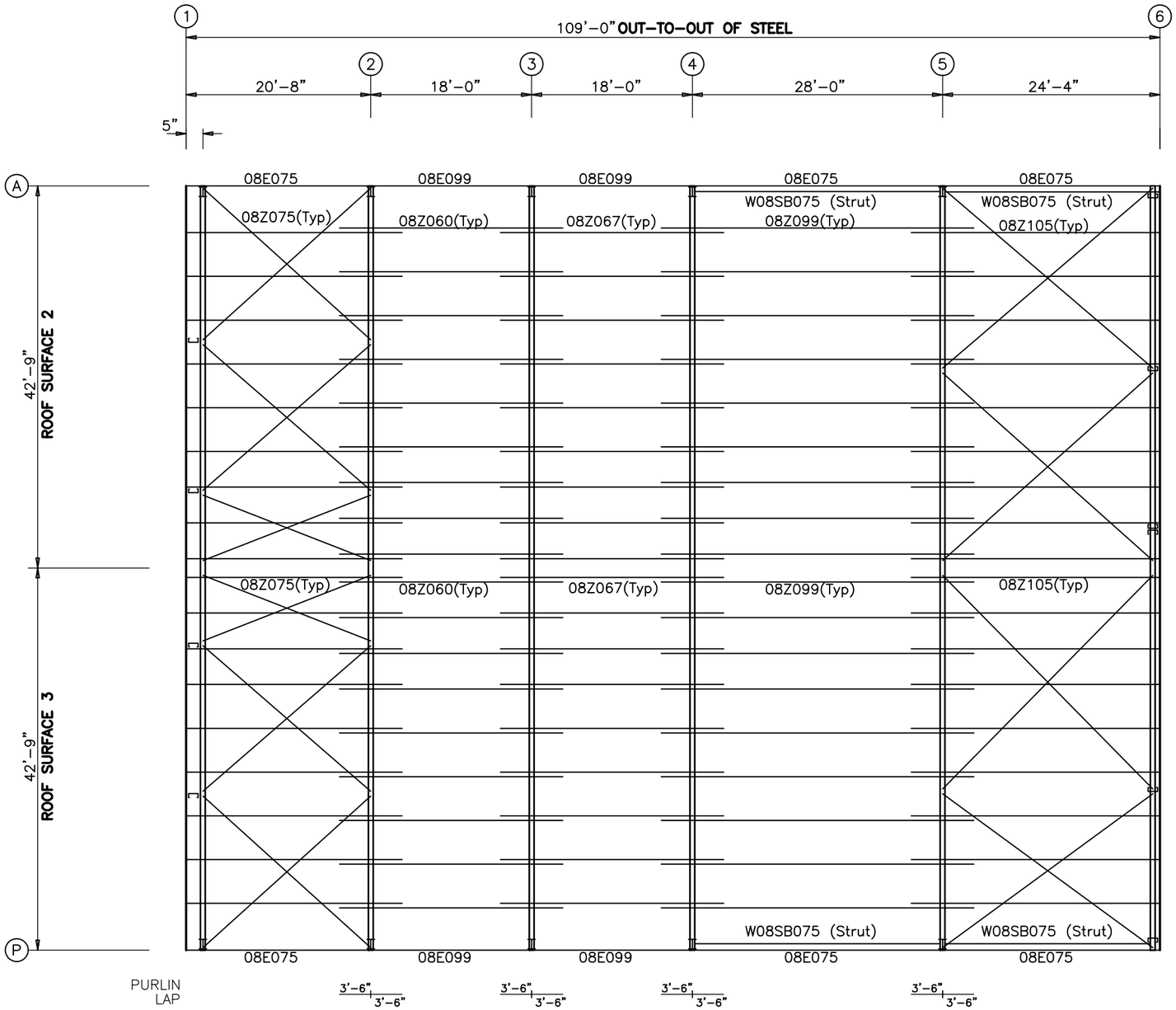

APPARATUS BAYS ROOF FRAMING PLAN
ALL ROD BRACING MATERIALS RD05– (U.N.O.)

ROOF FRAMING PLAN

GENERAL NOTES

1. PLACE TAGGED END OF RAFTERS TOWARDS THE LOW EAVE.
2. STD. ROD/CABLE SIZES PER PART PREFIX ARE:

ROD		CABLE	
RD05–	= 5/8" ROD	CA02–	= 1/4" CABLE
RD06–	= 3/4" ROD	CA03–	= 3/8" CABLE
RD07–	= 7/8" ROD	CA04–	= 1/2" CABLE
RD08–	= 1" ROD		
RD09–	= 1 1/8" ROD		
RD10–	= 1 1/4" ROD		

3. PURLIN AND EAVE STRUT CONNECTIONS UTILIZE BOTH A307 AND A325 BOLTS. REFER TO THE DETAILS FOR SPECIFIC USAGE REQUIREMENTS.
4. THIS DRAWING IS NOT TO SCALE.

ISSUE	DWN	CHK	ENG	PE	DATE
CONST. AB PLAN	NBS	EOP	CBM		7/24/2023
BUILDING DEPARTMENT REVIEW	WBS	DAN	CBM		7/31/2023

NUCOR BUILDING SYSTEMS
300 INDUSTRIAL PARKWAY, WATERLOO, IN 46793
PHONE: (260) 837-7891 FAX: (260) 837-7384
PO BOX 1006, 200 WHETSTONE RD, SWANSEA, SC 29160
PHONE: (803) 568-2100 FAX: (803) 568-2121
600 APACHE TRAIL, TERRELL, TX 75160
PHONE: (972) 524-4400 FAX: (972) 524-4417
1050 WATERY LANE, BRIGHAM CITY, UT 84302
PHONE: (435) 919-3100 FAX: (435) 919-3101

PROJECT NAME: WENDOVER FS #13 REPLACEMENT
WENDOVER, NV

CUSTOMER NAME: MICHAEL CLAY CORP
WINNEMUCCA, NV

JOB NUMBER: U23G0555A

SHEET TITLE

RUSSELL R. SKEEN
07/31/2023
Exp. Jun 30, 2024
CIVIL/STRUCTURAL

This sealed plans only to the materials described herein. Nucor Building Systems, a division of Nucor Corporation. The drawings and the information shown thereon are the property of Nucor Building Systems and are to be used by Nucor Building Systems's registered professional engineer only. Reproduction of these drawings is employed by Nucor Buildings Systems and does not serve as a certification unless signed and sealed of record and shall not be construed as such.

SHEET

E1 of 12

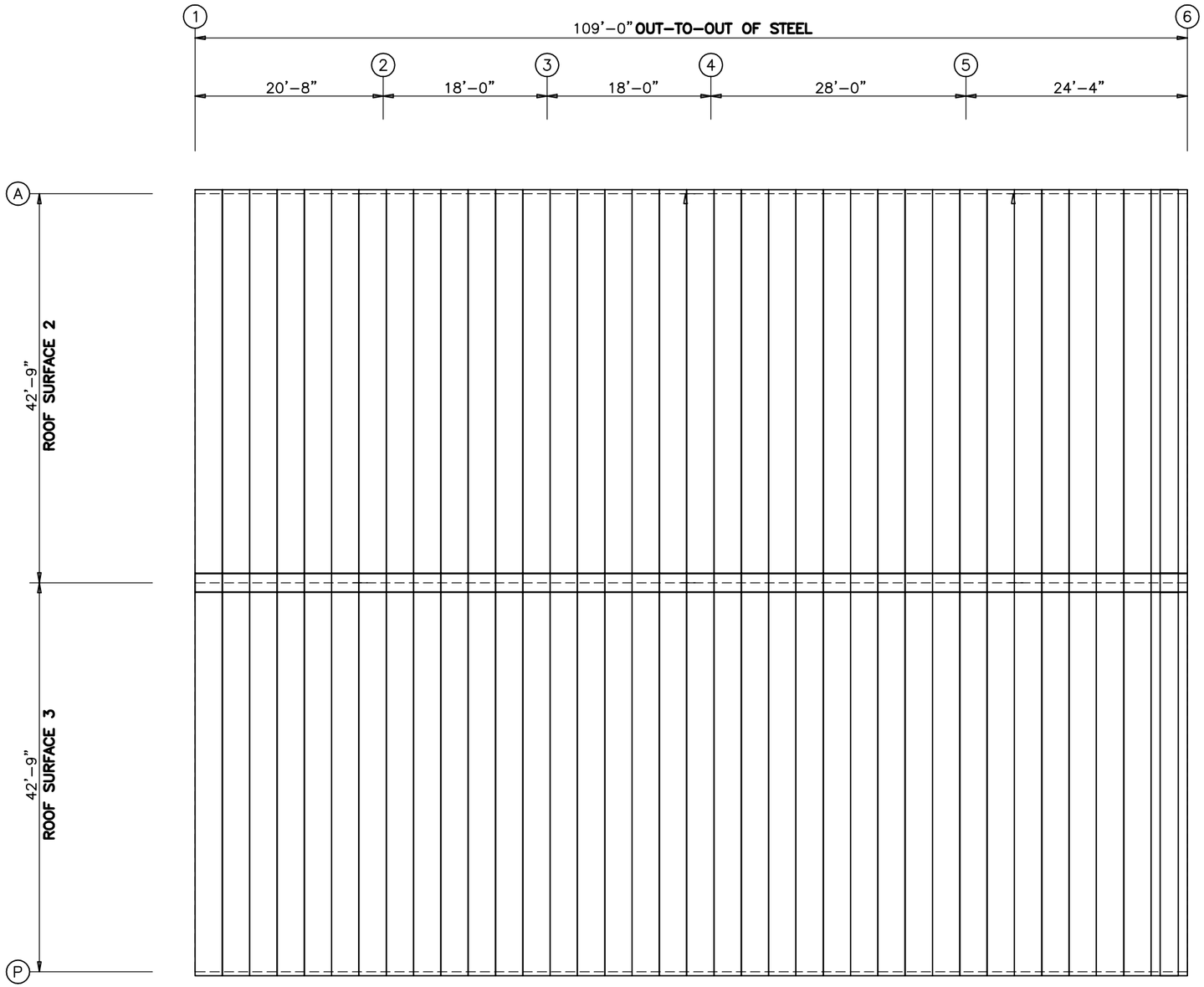

APPARATUS BAYS ROOF SHEETING PLAN

PANELS: 24Ga. 4" CFR42 – TERRA COTTA PVDF

ISSUE	DWN	CHK	ENG	PE	DATE
CONST. AB PLAN	NBS	EOP	CBM		7/24/2023
BUILDING DEPARTMENT REVIEW	WBS	DAN	CBM		7/31/2023

NUCOR BUILDING SYSTEMS
300 INDUSTRIAL PARKWAY, WATERLOO, IN 46793
PHONE: (260) 837-7891 FAX: (260) 837-7384
PO BOX 1006, 200 WHETSTONE RD, SWANSEA, SC 29160
PHONE: (803) 568-2100 FAX: (803) 568-2121
600 APACHE TRAIL, TERRELL, TX 75160
PHONE: (972) 524-4000 FAX: (972) 524-4417
1050 WATER LANE, BRIGHAM CITY, UT 84302
PHONE: (435) 919-3100 FAX: (435) 919-3101

PROJECT NAME
WENDOVER FS #13 REPLACEMENT
WENDOVER, NV

CUSTOMER NAME
MICHAEL CLAY CORP
WINNEMUCCA, NV

JOB NUMBER
U23G0555A

SHEET TITLE

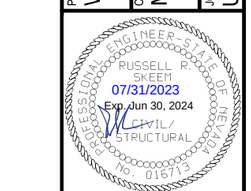

This sheet contains only to the materials described herein and is owned by Nucor Building Systems, a division of Nucor Corporation. The drawings and the information shown hereon are the product of Nucor Building Systems's employee or register professional engineer whose seal appears on these drawings is employed by Nucor Buildings Systems and does not serve as a consultant. Reproduction or reuse of record and shall not be construed as such.

SHEET

E2 of 12

SPLICE PLATE & BOLT TABLE					
Mark	Qty	Type	Dia	Width	Thick
SP1	12	A325	0.750	8	0.625
SP2	8	A325	0.750	8	0.500
SP3	8	A325	0.625	8	0.375
SP4	8	A325	0.625	8	0.500
SP5	12	A325	0.750	8	0.625

MEMBER TABLE					
	Web Depth	Web Plate		Top/Left Flange	Bottom/Right Flange
MARK	Start/End	Thick	Length	W x Thk	W x Thk
COL01	11.50/40.00	0.220	199.87	8 x 0.38	8 x 0.38
COL02	11.50/40.00	0.220	199.87	8 x 0.38	8 x 0.38
RAF01	28.88/22.88	0.164	120.00	8 x 0.31	8 x 0.50
RAF02	22.88/22.88	0.135	174.00	8 x 0.31	8 x 0.31
	22.88/28.88	0.150	188.13	8 x 0.31	8 x 0.25
RAF03	28.88/22.88	0.150	188.13	8 x 0.31	8 x 0.25
	22.88/22.88	0.135	174.00	8 x 0.31	8 x 0.31
RAF04	22.88/28.88	0.164	120.00	8 x 0.31	8 x 0.50

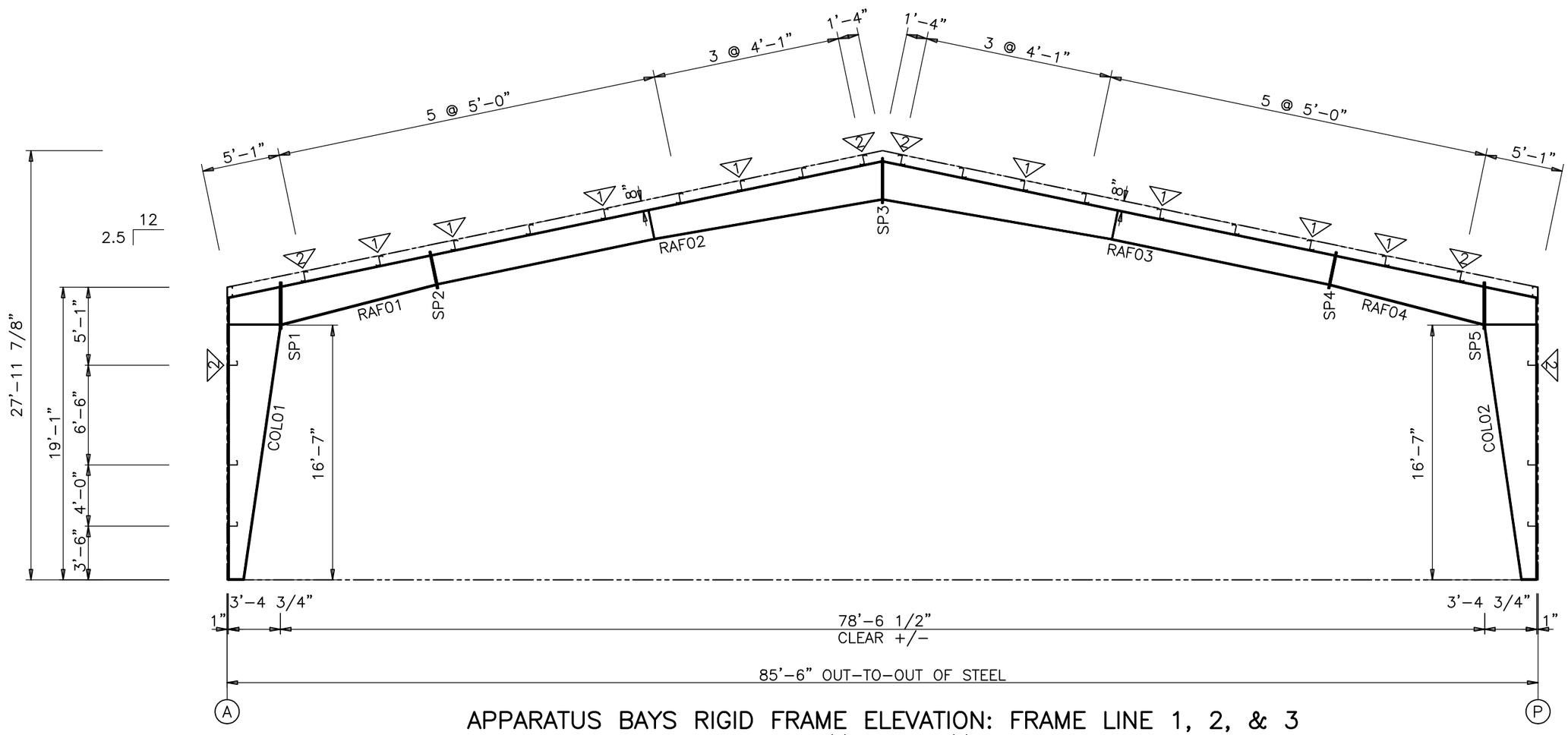

APPARATUS BAYS RIGID FRAME ELEVATION: FRAME LINE 1, 2, & 3

▽ FLANGE BRACES (1) ONE SIDE: (2) TWO SIDES

L2525105

ISSUE	DWN	CHK	ENG	PE	DATE
CONST. AB PLAN	NBS	EOP	CBM		7/24/2023
BUILDING DEPARTMENT REVIEW	WBS	DAN	CBM		7/31/2023

NUCOR BUILDING SYSTEMS
300 INDUSTRIAL PARKWAY, WATERLOO, IN 46793
PHONE: (260) 837-7891 FAX: (260) 837-7384
PO BOX 1006, 200 WHETSTONE RD, SWANSEA, SC 29160
PHONE: (803) 568-2100 FAX: (803) 568-2121
600 APACHE TRAIL, TERRELL, TX 75160
PHONE: (972) 551-6000 FAX: (972) 524-4417
1050 WATERY LANE, BRIGHAM CITY, UT 84302
PHONE: (435) 919-3100 FAX: (435) 919-3101

PROJECT NAME
WENDOVER FS #13 REPLACEMENT
WENDOVER, NV

CUSTOMER NAME
MICHAEL CLAY CORP
WINNEMUCCA, NV

JOB NUMBER
U23G0555A

SHEET TITLE

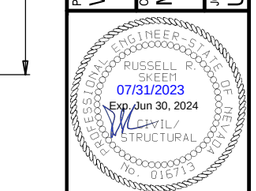

This set of plans only to the materials described herein by Nucor Building Systems, a division of Nucor Corporation. The drawings and the information shown thereon are the product of Nucor Building Systems engineer / register professional engineer employed by Nucor Building Systems and does not serve as a certified document and shall not be construed as such.

SHEET

E3 of 12

SPLICE PLATE & BOLT TABLE					
Mark	Qty	Type	Dia	Width	Thick
SP1	12	A325	0.875	8	0.750
SP2	12	A325	0.625	8	0.500
SP3	16	A325	0.750	8	0.750

MEMBER TABLE					
	Web Depth	Web Plate		Top/Left Flange	Bottom/Right Flange
MARK	Start/End	Thick	Length	W x Thk	W x Thk
COL01	11.25/31.00	0.188	198.00	8 x 0.38	8 x 0.63
COL02	11.25/31.00	0.188	198.00	8 x 0.63	8 x 0.38
RAF01	28.88/19.06	0.188	165.83	8 x 0.50	8 x 0.63
	19.06/28.88	0.150	204.00	8 x 0.38	8 x 0.38
	28.88/28.88	0.150	121.50	8 x 0.38	8 x 0.31
RAF02	28.88/28.88	0.150	121.50	8 x 0.38	8 x 0.31
	28.88/19.06	0.150	204.00	8 x 0.38	8 x 0.38
	19.06/28.88	0.188	165.83	8 x 0.50	8 x 0.63

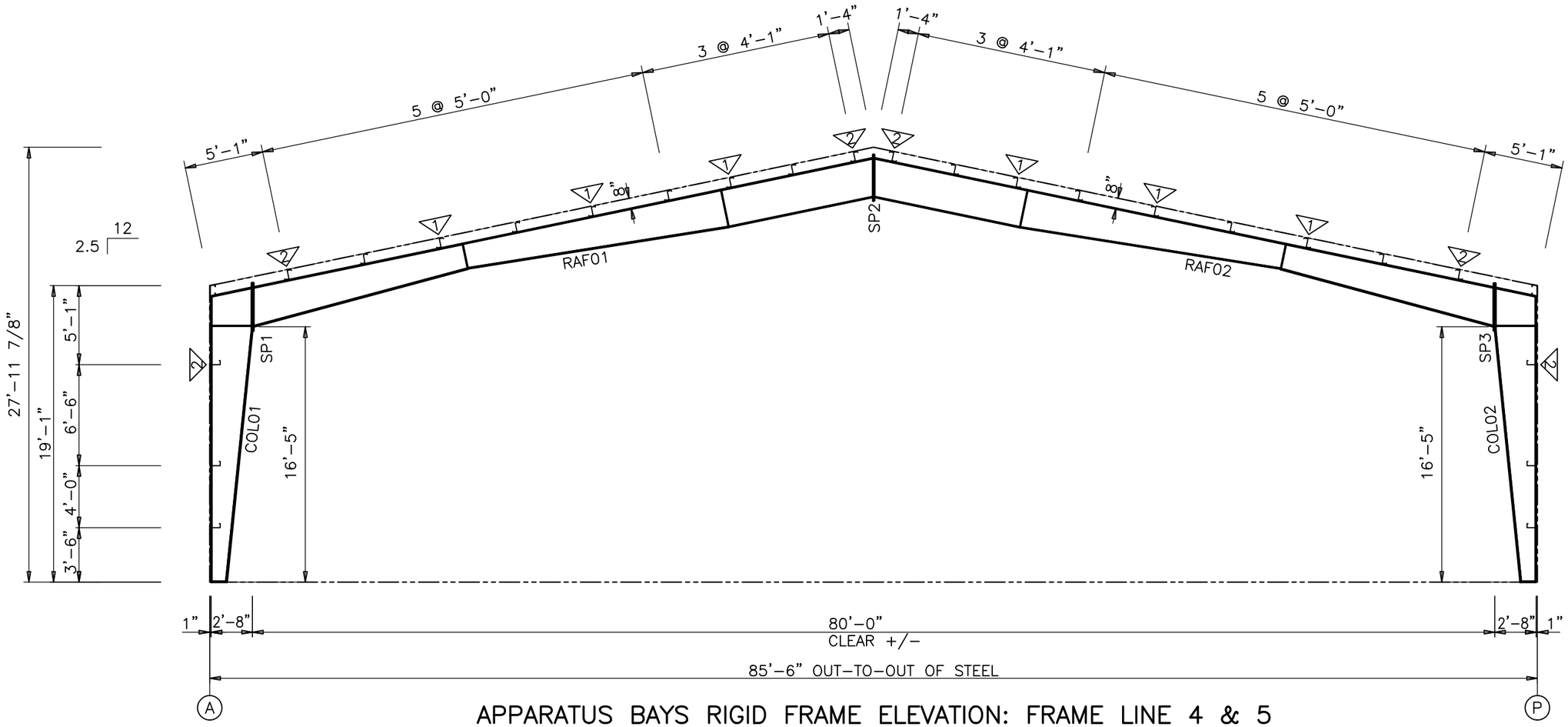

APPARATUS BAYS RIGID FRAME ELEVATION: FRAME LINE 4 & 5

▽ FLANGE BRACES (1) ONE SIDE: (2) TWO SIDES

L2525105

ISSUE	DWN	CHK	ENG	PE	DATE
CONST. AB PLAN	NBS	EOP	CBM		7/24/2023
BUILDING DEPARTMENT REVIEW	WBS	DAN	CBM		7/31/2023

NUCOR BUILDING SYSTEMS
300 INDUSTRIAL PARKWAY, WATERLOO, IN 46793
PHONE: (260) 837-7891 FAX: (260) 837-7384
PO BOX 1006, 200 WHETSTONE RD, SWANSEA, SC 29160
PHONE: (803) 568-2100 FAX: (803) 568-2121
600 APACHE TRAIL, TERRELL, TX 75160
PHONE: (972) 551-4500 FAX: (972) 524-4417
1050 WATERY LANE, BRIGHAM CITY, UT 84302
PHONE: (435) 919-3100 FAX: (435) 919-3101

PROJECT NAME
WENDOVER FS #13 REPLACEMENT
WENDOVER, NV

CUSTOMER NAME
MICHAEL CLAY CORP
WINNEMUCCA, NV

JOB NUMBER
U23G0555A

SHEET TITLE

RUSSELL R. SKEEN
07/31/2023
Exp. Jun 30, 2024
CIVIL/STRUCTURAL

This set of plans only to the materials described herein. Nucor Building Systems, a division of Nucor Corporation. The drawings and the information shown thereon are not to be used for any project not manufactured by Nucor Building Systems and does not serve as a certification that the buildings erected from these drawings is employed by Nucor Building Systems and does not serve as a certification that the buildings erected from these drawings will meet any code requirements. These drawings are not to be considered a set of record and shall not be construed as such.

SHEET

E4 of 12

SPLICE PLATE & BOLT TABLE					
Mark	Qty	Type	Dia	Width	Thick
SP1	4	A325	0.500	8	0.375
SP2	4	A325	0.500	8	0.375
SP3	4	A325	0.500	6	0.375
SP4	4	A325	0.500	8	0.375
SP5	4	A325	0.500	6	0.375
SP6	8	A325	0.500	6	0.375
SP7	4	A325	0.500	8	0.375
SP8	8	A325	0.750	6	0.500
SP9	4	A325	0.500	8	0.375

MEMBER TABLE			
	Web Depth	Web Plate	
MARK	Start/End	Thick	Length
COL01		W8x10	214.56
COL02		W8x18	264.36
COL03		W8x18	308.64
COL04		W8x18	257.04
COL05		W8x10	213.12
RAF01	8.00/8.00	W8x18	260.48
	8.00/8.00	W8x18	60.69
RAF02	8.00/8.00	W8x18	156.88
	8.00/8.00	W8x18	53.12
RAF03	8.00/8.00	W8x18	211.44
RAF04	8.00/8.00	W8x18	95.00
RAF05	8.00/8.00	W8x18	224.72

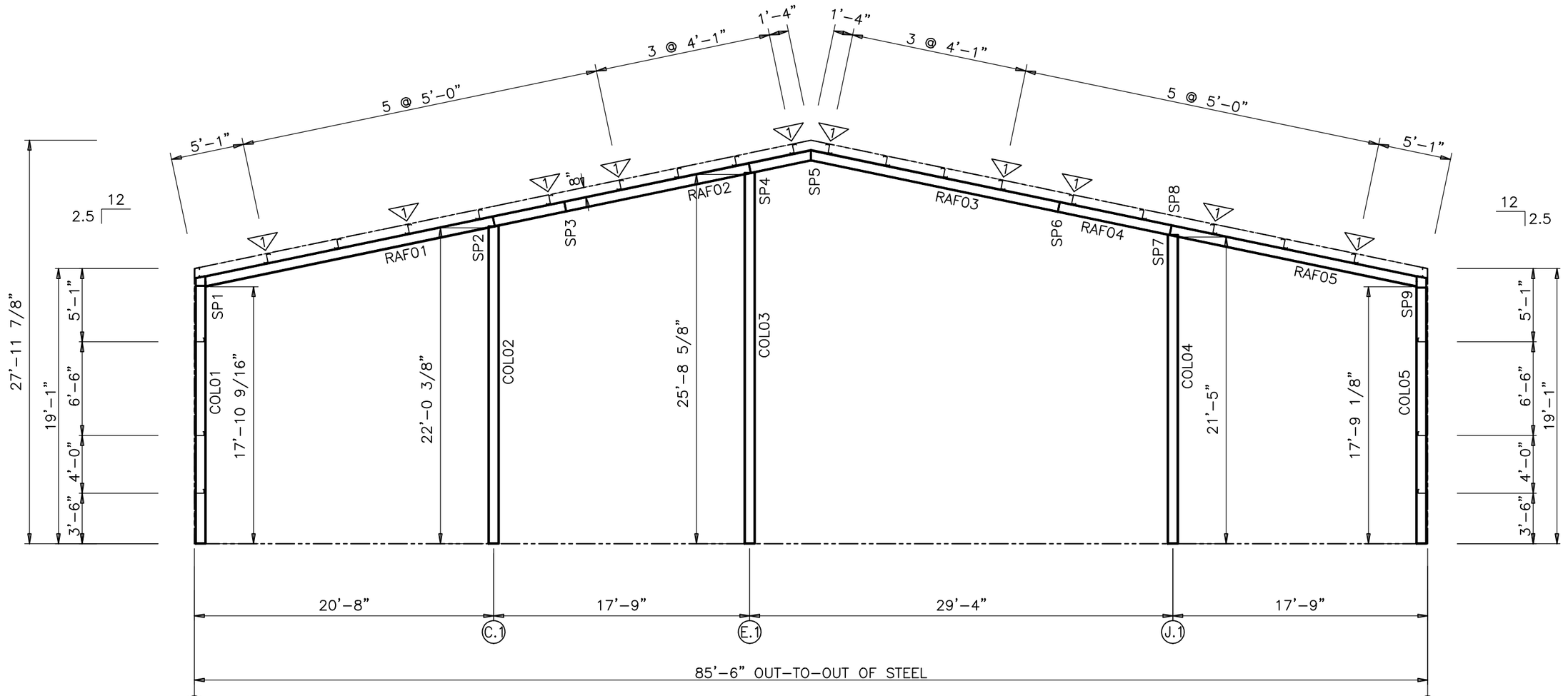

APPARATUS BAYS RIGID FRAME ELEVATION: FRAME LINE 6

▽ FLANGE BRACES (1) ONE SIDE: (2) TWO SIDES
L2525105

ISSUE	DWN	CHK	ENG	PE	DATE
CONST. AB PLAN	NBS	EOP	CBM		7/24/2023
BUILDING DEPARTMENT REVIEW	WBS	DAN	CBM		7/31/2023

NUCOR BUILDING SYSTEMS
300 INDUSTRIAL PARKWAY, WATERLOO, IN 46793
PHONE: (260) 837-7891 FAX: (260) 837-7384
PO BOX 1006, 200 WHETSTONE RD, SWANSEA, SC 29160
PHONE: (803) 568-2100 FAX: (803) 568-2121
600 APACHE TRAIL, TERRELL, TX 75160
PHONE: (972) 524-4400 FAX: (972) 524-4417
1050 WATERY LANE, BRIGHAM CITY, UT 84302
PHONE: (435) 919-3100 FAX: (435) 919-3101

PROJECT NAME
WENDOVER FS #13 REPLACEMENT
WENDOVER, NV

CUSTOMER NAME
MICHAEL CLAY CORP
WINNEMUCCA, NV

JOB NUMBER
U23G0555A

SHEET TITLE

RUSSELL R. SKEEN
07/31/2023
Exp. Jun 30, 2024
CIVIL/STRUCTURAL

This seal affirms only to the materials and procedures needed by Nucor Building Systems, a division of Nucor Corporation. The drawings and the methods and procedures presented are the product of Nucor Building Systems's in-house professional engineering staff. Application of these drawings is employed by Nucor Buildings Systems and does not serve as a certification that they have been used on record and shall not be construed as such.

SHEET
E5 of 12

SPLICE PLATE & BOLT TABLE					
Mark	Qty	Type	Dia	Width	Thick
SP1	12	A325	0.75	8	0.625
SP2	12	A325	0.75	8	0.625

MEMBER TABLE					
	Web Depth	Web Plate		Top/Left Flange	Bottom/Right Flange
MARK	Start/End	Thick	Length	W x Thk	W x Thk
COL01	21.00/21.00	0.164	199.00	8 x 0.50	8 x 0.50
COL02	21.00/21.00	0.164	199.00	8 x 0.50	8 x 0.50
RAF01	19.00/19.00	0.164	201.00	8 x 0.50	8 x 0.50

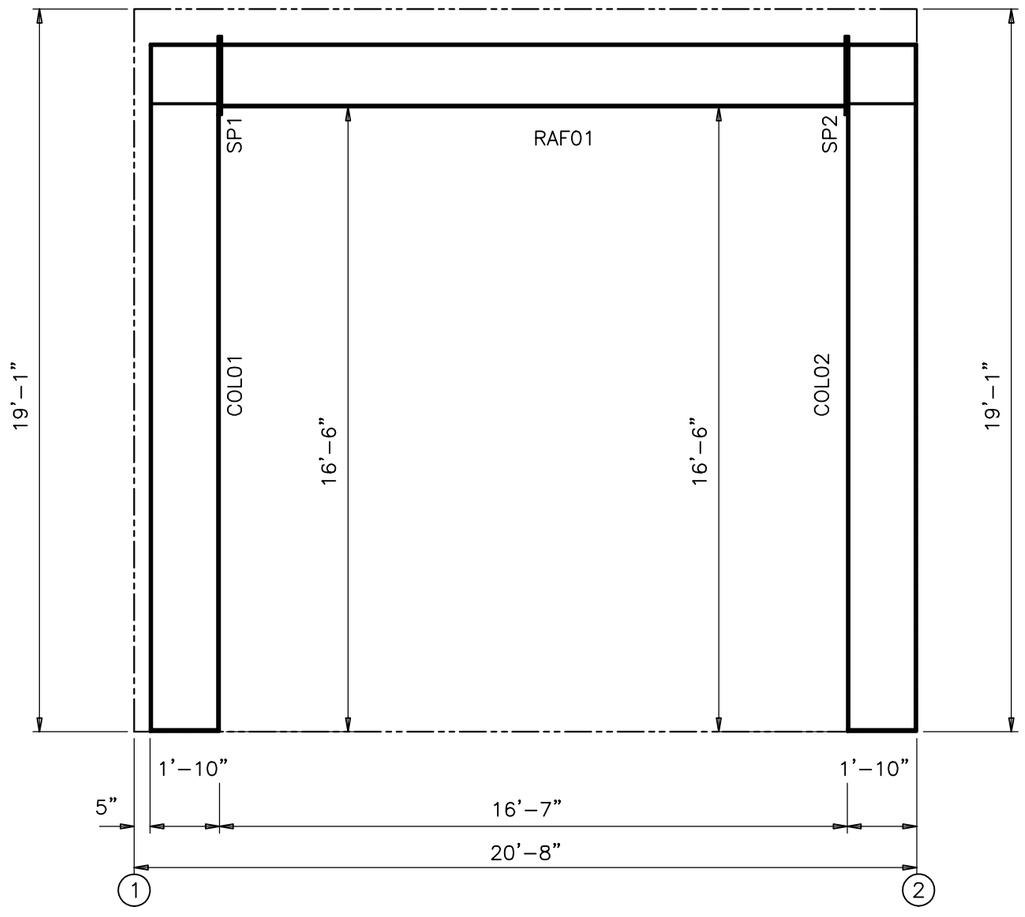

APPARATUS BAYS PORTAL FRAME ELEVATION: FRAME LINE A & P, BAY 1–2

ISSUE	DWN	CHK	ENG	PE	DATE
CONST. AB PLAN	NBS	EOP	CBM		7/24/2023
BUILDING DEPARTMENT REVIEW	WBS	DAN	CBM		7/31/2023

NUCOR BUILDING SYSTEMS
300 INDUSTRIAL PARKWAY, WATERLOO, IN 46793
PHONE: (260) 837-7891 FAX: (260) 837-7384
PO BOX 1006, 200 WHETSTONE RD, SWANSEA, SC 29160
PHONE: (803) 568-2100 FAX: (803) 568-2121
600 APACHE TRAIL, TERRELL, TX 75160
PHONE: (972) 524-4500 FAX: (972) 524-4417
1050 WATERY LANE, BRIGHAM CITY, UT 84302
PHONE: (435) 919-3100 FAX: (435) 919-3101

PROJECT NAME
WENDOVER FS #13 REPLACEMENT
WENDOVER, NV

CUSTOMER NAME
MICHAEL CLAY CORP
WINNEMUCCA, NV

JOB NUMBER
U23G0555A

SHEET TITLE

RUSSELL R. SKEEM
PROFESSIONAL ENGINEER - STATE OF NEVADA
07/31/2023
Exp. Jun 30, 2024
CIVIL/STRUCTURAL
NO. 016713

This set of plans and/or specifications is the property of Nucor Building Systems, a division of Nucor Corporation. The drawings and the information shown thereon are the product of Nucor Building Systems' employees and engineers and those employed by Nucor Buildings Systems and does not serve as a contract document and shall not be construed as such.

SHEET
E6 of 12

SIDEWALL FRAMING PLAN

GENERAL NOTES

1. STD. ROD/CABLE SIZES PER PART PREFIX ARE:

ROD		CABLE	
RD05–	= 5/8" ROD	CA02–	= 1/4" CABLE
RD06–	= 3/4" ROD	CA03–	= 3/8" CABLE
RD07–	= 7/8" ROD	CA04–	= 1/2" CABLE
RD08–	= 1" ROD		
RD09–	= 1 1/8" ROD		
RD10–	= 1 1/4" ROD		

2. ROD/CABLE BRACING THAT OCCURS IN FLUSH OR INSET GIRT CONDITIONS WILL REQUIRE FIELD SLOTTING OF GIRT WEBS TO ALLOW FOR BRACING.
3. FRAMED OPENINGS WHICH ARE FIELD LOCATED WILL REQUIRE FIELD CUTTING OF GIRTS AND SHEETING.
4. THIS DRAWING IS NOT TO SCALE.

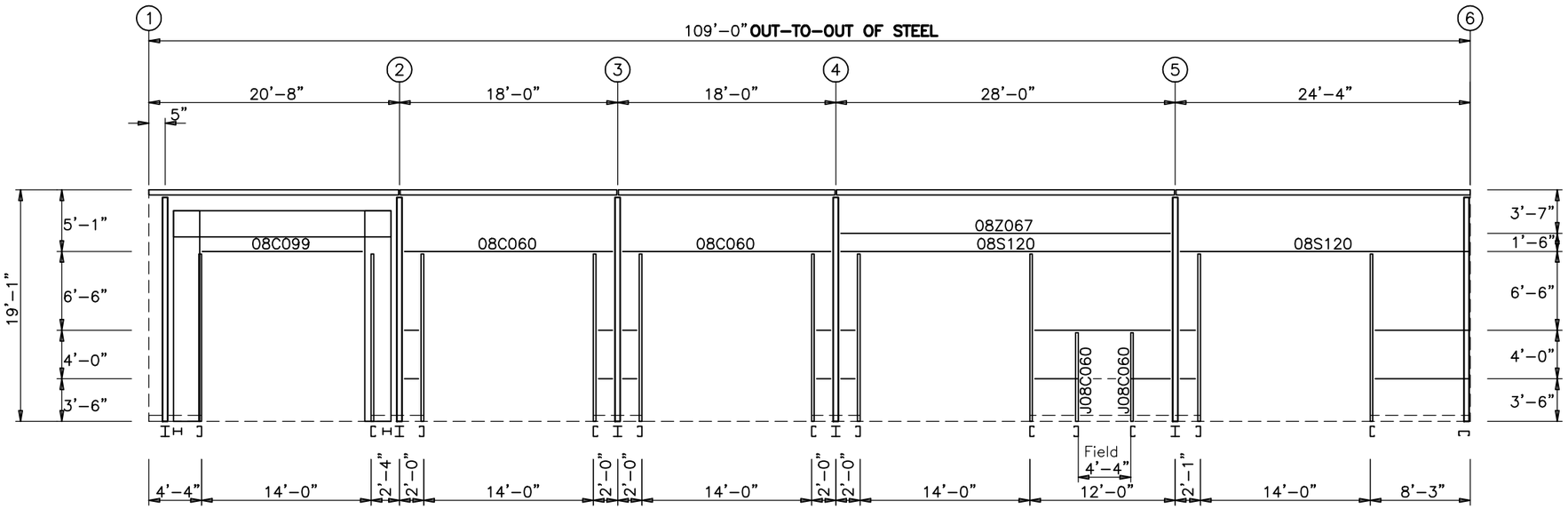

APPARATUS BAYS SIDEWALL FRAMING: FRAME LINE P
ALL GIRTS 08Z060 (U.N.O.)
ALL F.O. MATERIALS 08C075 (U.N.O.)

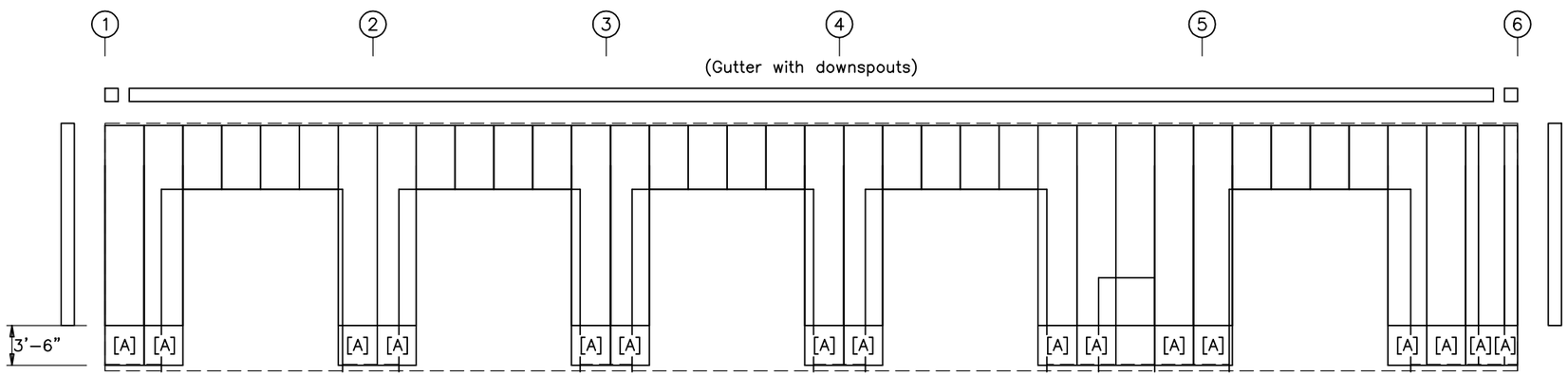

APPARATUS BAYS SIDEWALL SHEETING & TRIM: FRAME LINE P

PANELS: 24Ga. 2.5" Santa Fe – Desert Sand PVDF

[A] PANELS: 24Ga. 2.5" Santa Fe – Surrey Beige PVDF

6" TALL WALL BY OTHERS FROM F.F. WHOLE WALL

ISSUE	DWN	CHK	ENG	PE	DATE
CONST. AB PLAN	NBS	EOP	CBM		7/24/2023
BUILDING DEPARTMENT REVIEW	WBS	DAN	CBM		7/31/2023

NUCOR BUILDING SYSTEMS
300 INDUSTRIAL PARKWAY, WATERLOO, IN 46793
PHONE: (260) 837–7891 FAX: (260) 837–7384
PO BOX 1006, 200 WHETSTONE RD, SWANSEA, SC 29160
PHONE: (803) 568–2100 FAX: (803) 568–2121
600 APACHE TRAIL, TERRELL, TX 75160
PHONE: (972) 524–4500 FAX: (972) 524–4417
1050 WATER LANE, BRIGHAM CITY, UT 84302
PHONE: (435) 919–3100 FAX: (435) 919–3101

PROJECT NAME
WENDOVER FS #13 REPLACEMENT
WENDOVER, NV

CUSTOMER NAME
MICHAEL CLAY CORP
WINNEMUCCA, NV

JOB NUMBER
U23G0555A

SHEET TITLE

RUSSELL R. SKEEN
07/31/2023
Exp. Jun 30, 2024
CIVIL/STRUCTURAL

This set of plans only to the materials as described herein by Nucor Building Systems, a division of Nucor Corporation. The drawings and the information shown thereon, which are the property of Nucor Building Systems, are not to be used or reproduced in whole or in part without the written consent of Nucor Building Systems and are to be returned upon request. These plans are prepared by a registered professional engineer employed by Nucor Buildings Systems and does not serve as a substitute for those required of record and shall not be construed as such.

SHEET
E7 of 12

SIDEWALL FRAMING PLAN

GENERAL NOTES

1. STD. ROD/CABLE SIZES PER PART PREFIX ARE:

ROD		CABLE	
RD05–	= 5/8" ROD	CA02–	= 1/4" CABLE
RD06–	= 3/4" ROD	CA03–	= 3/8" CABLE
RD07–	= 7/8" ROD	CA04–	= 1/2" CABLE
RD08–	= 1" ROD		
RD09–	= 1 1/8" ROD		
RD10–	= 1 1/4" ROD		

2. ROD/CABLE BRACING THAT OCCURS IN FLUSH OR INSET GIRT CONDITIONS WILL REQUIRE FIELD SLOTTING OF GIRT WEBS TO ALLOW FOR BRACING.
3. FRAMED OPENINGS WHICH ARE FIELD LOCATED WILL REQUIRE FIELD CUTTING OF GIRTS AND SHEETING.
4. THIS DRAWING IS NOT TO SCALE.

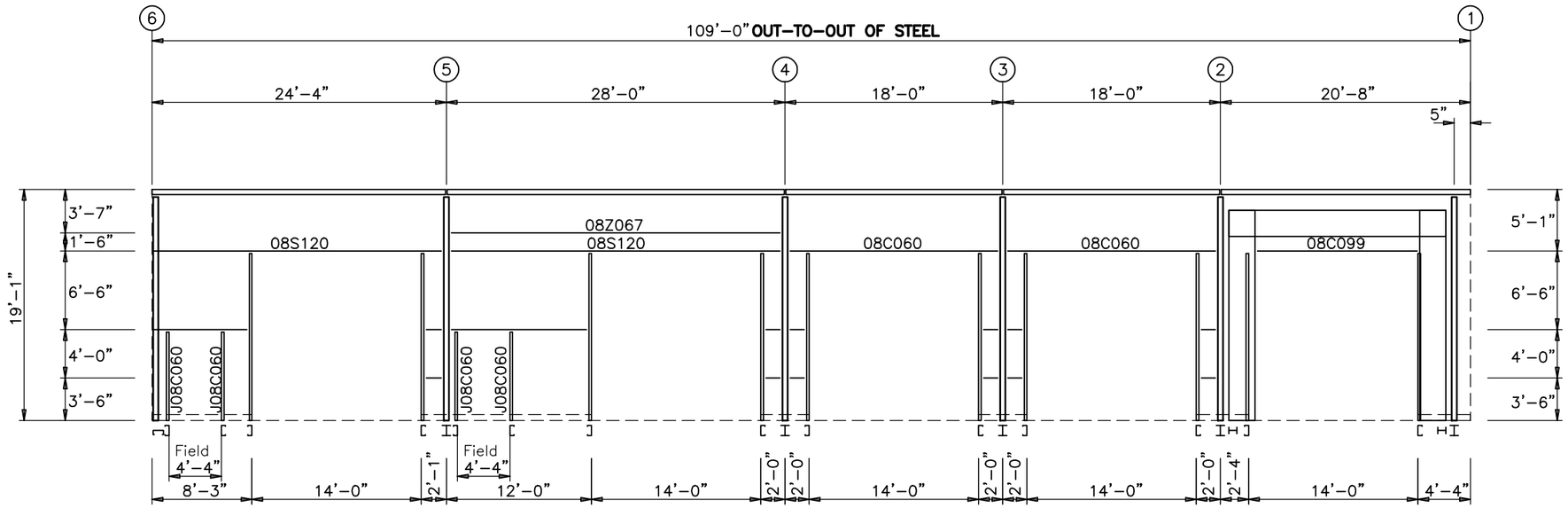

APPARATUS BAYS SIDEWALL FRAMING: FRAME LINE A
ALL GIRTS 08Z060 (U.N.O.)
ALL F.O. MATERIALS 08C075 (U.N.O.)

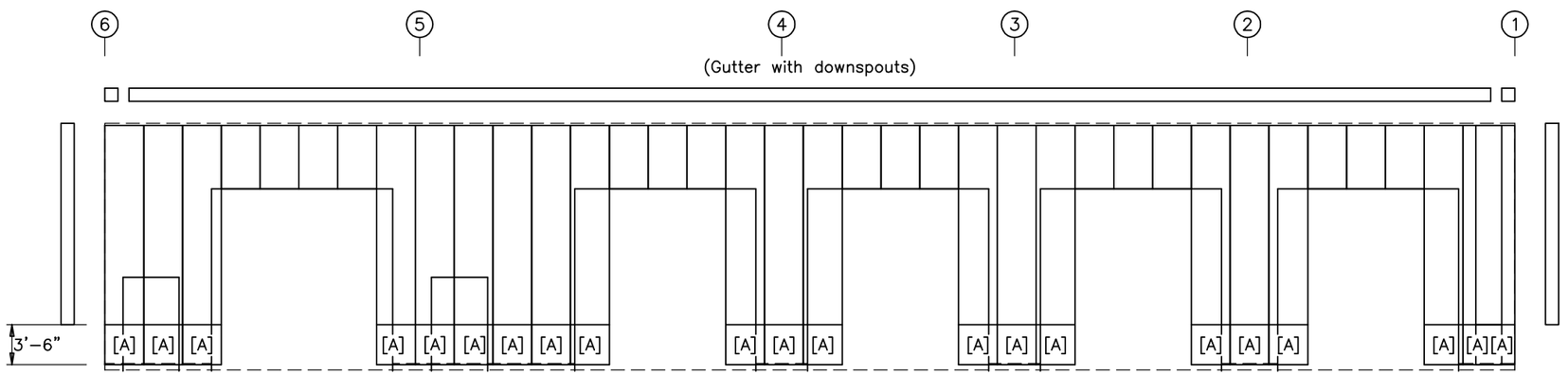

APPARATUS BAYS SIDEWALL SHEETING & TRIM: FRAME LINE A

PANELS: 24Ga. 2.5" Santa Fe – Desert Sand PVDF

[A] PANELS: 24Ga. 2.5" Santa Fe – Surrey Beige PVDF

6" TALL WALL BY OTHERS FROM F.F. WHOLE WALL

ISSUE	DWN	CHK	ENG	PE	DATE
CONST. AB PLAN	NBS	EOP	CBM		7/24/2023
BUILDING DEPARTMENT REVIEW	WBS	DAN	CBM		7/31/2023

NUCOR BUILDING SYSTEMS
300 INDUSTRIAL PARKWAY, WATERLOO, IN 46793
PHONE: (260) 837–7891 FAX: (260) 837–7384
PO BOX 1006, 200 WHETSTONE RD, SWANSEA, SC 29160
PHONE: (803) 568–2100 FAX: (803) 568–2121
600 APACHE TRAIL, TERRELL, TX 75160
PHONE: (972) 524–4400 FAX: (972) 524–4417
1050 WATERY LANE, BRIGHAM CITY, UT 84302
PHONE: (435) 919–3100 FAX: (435) 919–3101

PROJECT NAME
WENDOVER FS #13 REPLACEMENT
WENDOVER, NV

CUSTOMER NAME
MICHAEL CLAY CORP
WINNEMUCCA, NV

JOB NUMBER
U23G0555A

SHEET TITLE

RUSSELL R. SKEEN
07/31/2023
Exp. Jun 30, 2024
CIVIL/STRUCTURAL

This set of plans only to the materials described herein by Nucor Building Systems, a division of Nucor Corporation. The drawings and the information shown thereon are the product of Nucor Building Systems's engineer professional employees and should not be used on other projects. Any reuse of these drawings is employed by Nucor Buildings Systems and does not serve as authorization to reuse these drawings as record and shall not be construed as such.

SHEET

E8 of 12

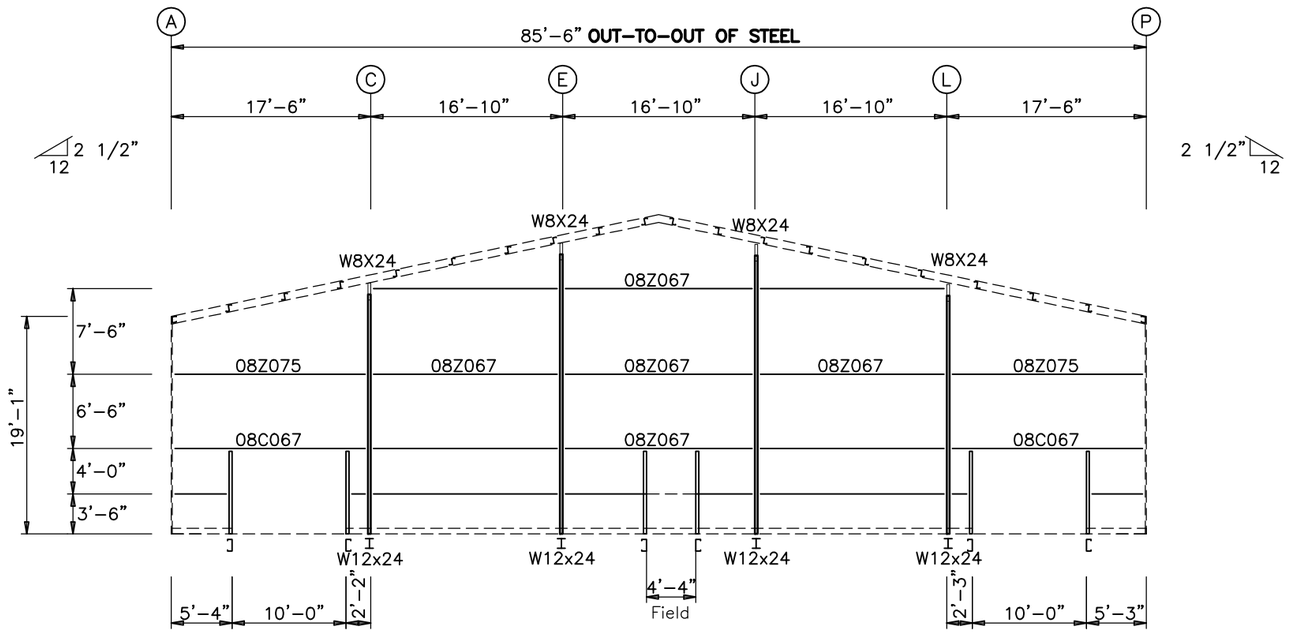

APPARATUS BAYS ENDWALL FRAMING: FRAME LINE 1

ALL GIRTS 08Z060 (U.N.O.)
ALL F.O. MATERIALS 08C060 (U.N.O.)

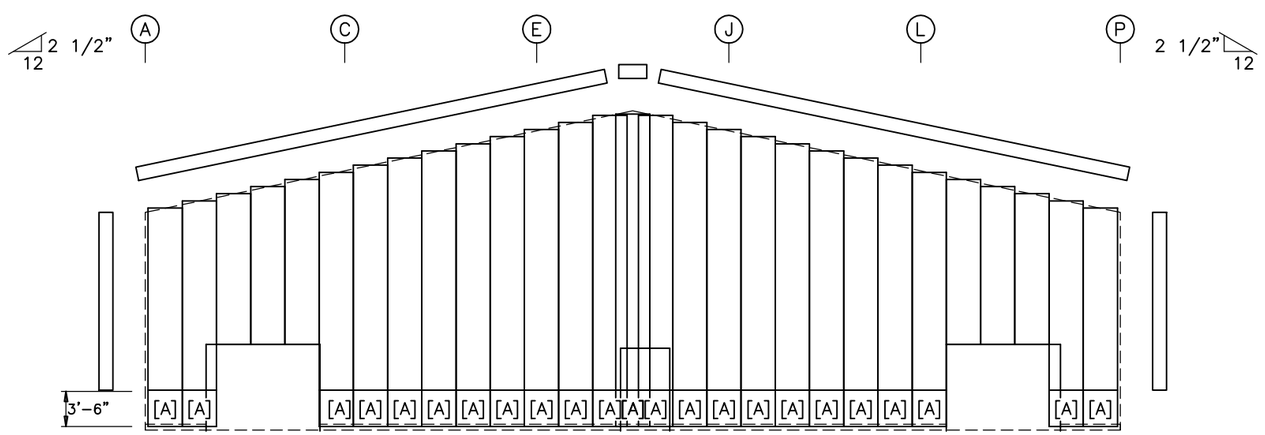

APPARATUS BAYS ENDWALL SHEETING & TRIM: FRAME LINE 1

PANELS: 24Ga. 2.5" Santa Fe – Desert Sand PVDF
[A] PANELS: 24Ga. 2.5" Santa Fe – Surrey Beige PVDF
6" TALL WALL BY OTHERS FROM F.F. WHOLE WALL

ENDWALL FRAMING PLAN

GENERAL NOTES

1. STD. ROD/CABLE SIZES PER PART PREFIX ARE:

ROD		CABLE	
RD05–	= 5/8" ROD	CA02–	= 1/4" CABLE
RD06–	= 3/4" ROD	CA03–	= 3/8" CABLE
RD07–	= 7/8" ROD	CA04–	= 1/2" CABLE
RD08–	= 1" ROD		
RD09–	= 1 1/8" ROD		
RD10–	= 1 1/4" ROD		

2. ROD/CABLE BRACING THAT OCCURS IN FLUSH OR INSET GIRT CONDITIONS WILL REQUIRE FIELD SLOTTING OF GIRT WEBS TO ALLOW FOR BRACING.
3. FRAMED OPENINGS WHICH ARE FIELD LOCATED WILL REQUIRE FIELD CUTTING OF GIRTS AND SHEETING.
4. THIS DRAWING IS NOT TO SCALE.

ISSUE	DWN	CHK	ENG	PE	DATE
CONST. AB PLAN	NBS	EOP	CBM		7/24/2023
BUILDING DEPARTMENT REVIEW	WBS	DAN	CBM		7/31/2023

NUCOR BUILDING SYSTEMS
300 INDUSTRIAL PARKWAY, WATERLOO, IN 46793
PHONE: (260) 837-7891 FAX: (260) 837-7384
PO BOX 1006, 200 WHETSTONE RD, SWANSEA, SC 29160
PHONE: (803) 568-2100 FAX: (803) 568-2121
600 APACHE TRAIL, TERRELL, TX 75160
PHONE: (972) 524-4000 FAX: (972) 524-4417
1050 WATERY LANE, BRIGHAM CITY, UT 84302
PHONE: (435) 919-3100 FAX: (435) 919-3101

PROJECT NAME
WENDOVER FS #13 REPLACEMENT
WENDOVER, NV

CUSTOMER NAME
MICHAEL CLAY CORP
WINNEMUCCA, NV

JOB NUMBER
U23G0555A

SHEET TITLE

RUSSELL R. SKEEN
07/31/2023
Exp. Jun 30, 2024
CIVIL/STRUCTURAL

This sealed drawing is for the materials described herein furnished by Nucor Building Systems, a division of Nucor Corporation. The drawings and the information shown hereon are the product of Nucor Building Systems's engineer professional employee and was prepared under his/her direction. The engineer whose seal is shown on these drawings is employed by Nucor Buildings Systems and does not serve as a consultant. This drawing is not to be used for any other purpose and shall not be construed as such.

SHEET
E9 of 12

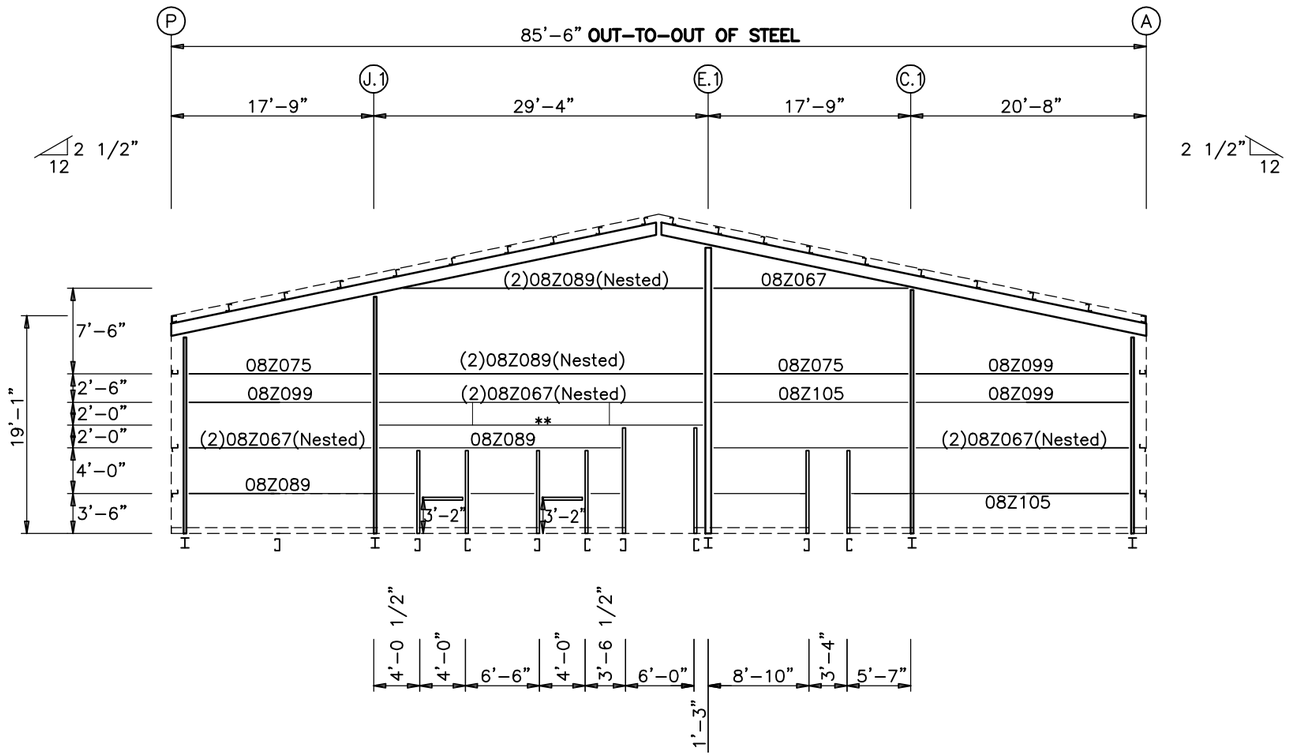

APPARATUS BAYS ENDWALL FRAMING: FRAME LINE 6

(2) ROWS GIRT BRACING REQUIRED IN BAY 2 @ 9'-6" TO 11'-6" , SEE PAGE D4 FOR INFORMATION
ALL GIRTS 08Z060 (U.N.O.)
ALL F.O. MATERIALS 08C060 (U.N.O.)
**** INDICATES (2)08Z105(NESTED)**

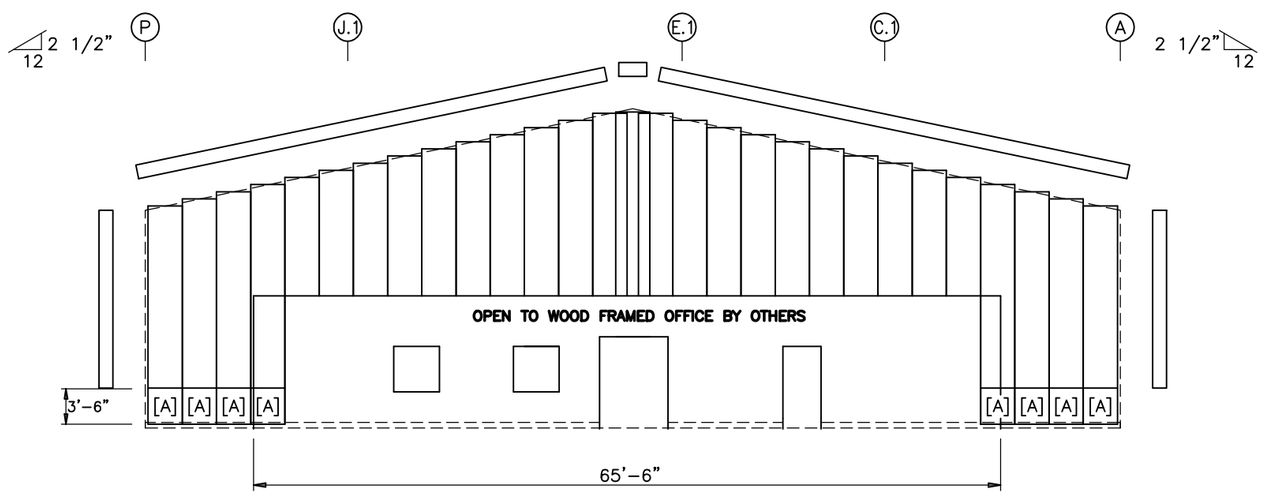

APPARATUS BAYS ENDWALL SHEETING & TRIM: FRAME LINE 6

PANELS: 24Ga. 2.5" Santa Fe – Desert Sand PVDF
[A] PANELS: 24Ga. 2.5" Santa Fe – Surrey Beige PVDF
6" TALL WALL BY OTHERS FROM F.F. WHOLE WALL

ENDWALL FRAMING PLAN

GENERAL NOTES

1. STD. ROD/CABLE SIZES PER PART PREFIX ARE:

ROD		CABLE	
RD05–	= 5/8" ROD	CA02–	= 1/4" CABLE
RD06–	= 3/4" ROD	CA03–	= 3/8" CABLE
RD07–	= 7/8" ROD	CA04–	= 1/2" CABLE
RD08–	= 1" ROD		
RD09–	= 1 1/8" ROD		
RD10–	= 1 1/4" ROD		

2. ROD/CABLE BRACING THAT OCCURS IN FLUSH OR INSET GIRT CONDITIONS WILL REQUIRE FIELD SLOTTING OF GIRT WEBS TO ALLOW FOR BRACING.
3. FRAMED OPENINGS WHICH ARE FIELD LOCATED WILL REQUIRE FIELD CUTTING OF GIRTS AND SHEETING.
4. THIS DRAWING IS NOT TO SCALE.

ISSUE	DWN	CHK	ENG	PE	DATE
CONST. AB PLAN	NBS	EOP	CBM		7/24/2023
BUILDING DEPARTMENT REVIEW	WBS	DAN	CBM		7/31/2023

NUCOR BUILDING SYSTEMS
300 INDUSTRIAL PARKWAY, WATERLOO, IN 46793
PHONE: (260) 837-7891 FAX: (260) 837-7384
PO BOX 1006, 200 WHETSTONE RD, SWANSEA, SC 29160
PHONE: (803) 568-2100 FAX: (803) 568-2121
600 APACHE TRAIL, TERRELL, TX 75160
PHONE: (972) 524-4500 FAX: (972) 524-4417
1050 WATERY LANE, BRIGHAM CITY, UT 84302
PHONE: (435) 919-3100 FAX: (435) 919-3101

PROJECT NAME: WENDOVER FS #13 REPLACEMENT
WENDOVER, NV

CUSTOMER NAME: MICHAEL CLAY CORP
WINNEMUCCA, NV

JOB NUMBER: U23G0555A

SHEET TITLE

RUSSELL R. SKEEN
07/31/2023
Exp. Jun 30, 2024
CIVIL/STRUCTURAL

This sealed drawing is for the materials described herein as furnished by Nucor Building Systems, a division of Nucor Corporation. The drawings and the information shown thereon are not to be used for any other project. The contract between Nucor Building Systems and the registered professional engineer who sealed these drawings is solely between those parties. Nucor Building Systems is employed by Nucor Corporation and does not serve as the registered professional engineer of record and shall not be construed as such.

SHEET
E10 of 12

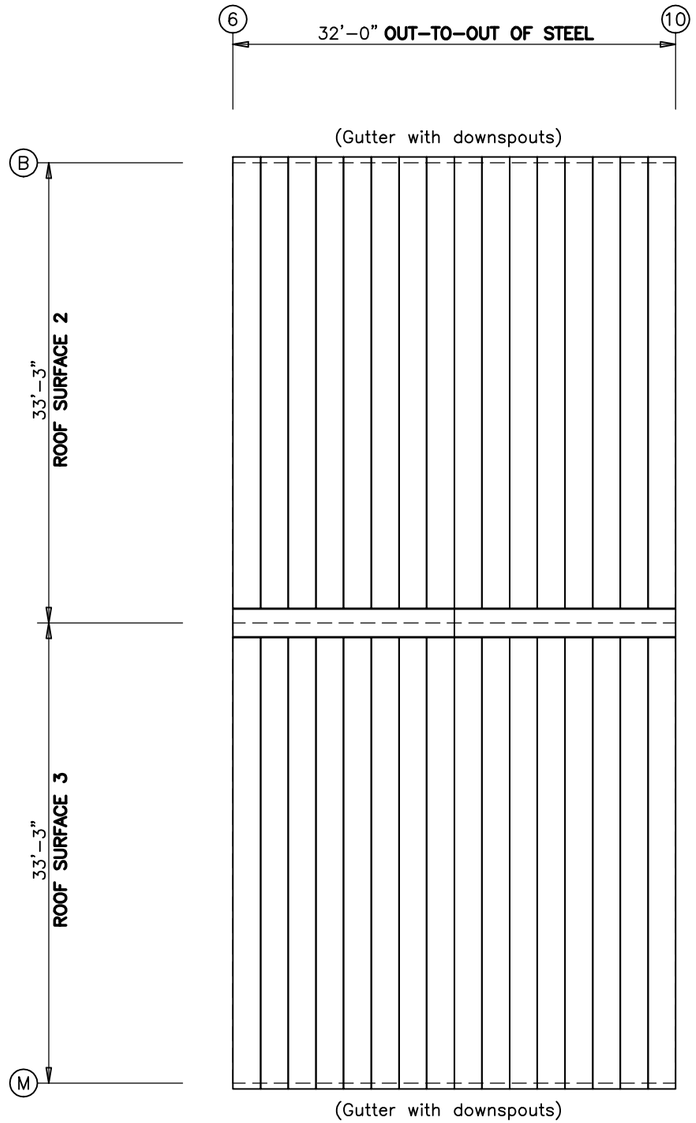

WOOD FRAMED OFFICE BY OTHERS ROOF SHEETING PLAN

PANELS: 24 Ga. LS360 – Terra Cotta PVDF

ISSUE	DWN	CHK	ENG	PE	DATE
CONST. AB PLAN	NBS	EOP	CBM		7/24/2023
BUILDING DEPARTMENT REVIEW	WBS	DAN	CBM		7/31/2023

NUCOR BUILDING SYSTEMS
305 INDUSTRIAL PARKWAY, WATERLOO, IN 46793
PHONE: (260) 837-7891 FAX: (260) 837-7384
PO BOX 1006, 200 WHETSTONE RD, SWANSEA, SC 29160
PHONE: (803) 568-2100 FAX: (803) 568-2121
600 APACHE TRAIL, TERRELL, TX 75160
PHONE: (972) 524-4500 FAX: (972) 524-4417
1050 WATER LANE, BRIGHAM CITY, UT 84302
PHONE: (435) 919-3100 FAX: (435) 919-3101

PROJECT NAME
WENDOVER FS #13 REPLACEMENT
WENDOVER, NV

CUSTOMER NAME
MICHAEL CLAY CORP
WINNEMUCCA, NV

JOB NUMBER
U23G0555A

SHEET TITLE

RUSSELL R. SKEEM
07/31/2023
Exp. Jun 30, 2024
CIVIL/STRUCTURAL
No. 016713

This set of plans only to the materials designed and detailed by Nucor Building Systems, a division of Nucor Corporation. The drawings and the notes thereon are the property of Nucor Building Systems and are the product of Nucor Building Systems employee engineer professional engineer. Any use of these drawings is employed by Nucor Buildings Systems and does not serve as a record the construction record or as such.

SHEET
E11 of 12

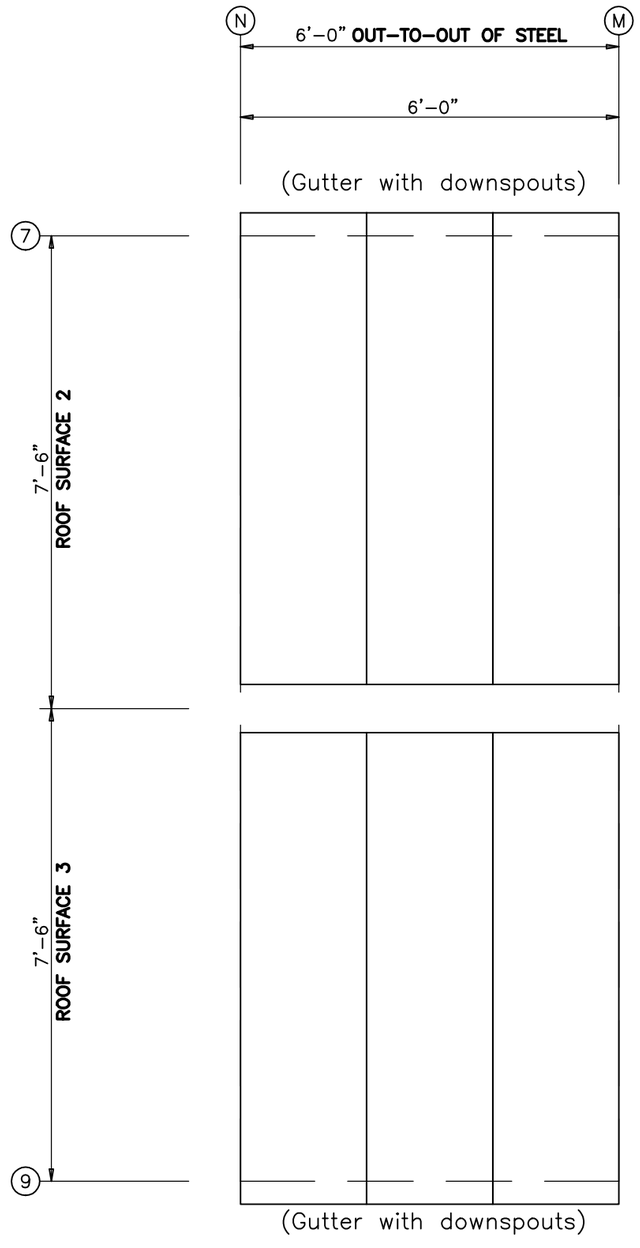

ENTRY BY OTHERS ROOF SHEETING PLAN

PANELS: 24 Ga. LS360 – Terra Cotta PVDF

ISSUE	DWN	CHK	ENG	PE	DATE
CONST. AB PLAN	NBS	EOP	CBM		7/24/2023
BUILDING DEPARTMENT REVIEW	WBS	DAN	CBM		7/31/2023

NUCOR BUILDING SYSTEMS
300 INDUSTRIAL PARKWAY, WATERLOO, IN 46793
PHONE: (260) 837-7891 FAX: (260) 837-7384
PO BOX 1006, 200 WHETSTONE RD, SWANSEA, SC 29160
PHONE: (803) 568-2100 FAX: (803) 568-2121
600 APACHE TRAIL, TERRELL, TX 75160
PHONE: (972) 524-4500 FAX: (972) 524-4417
1050 WATER LANE, BRIGHAM CITY, UT 84302
PHONE: (435) 919-3100 FAX: (435) 919-3101

PROJECT NAME
WENDOVER FS #13 REPLACEMENT
WENDOVER, NV

CUSTOMER NAME
MICHAEL CLAY CORP
WINNEMUCCA, NV

JOB NUMBER
U23G0555A

SHEET TITLE

RUSSELL R. SKEEM
PROFESSIONAL ENGINEER - STATE OF NEVADA
07/31/2023
Exp. Jun 30, 2024
CIVIL/STRUCTURAL
NO. 016713

This set of plans and/or specifications is submitted only to the materials described herein and is based upon the information and requirements indicated by the customer. Nucor Building Systems, a division of Nucor Corporation, has the exclusive right to prepare or modify these plans. The drawings and the information shown thereon are the exclusive property of Nucor Building Systems and are not to be reproduced, published or used in any way without the permission of Nucor Building Systems. It is the responsibility of the erector to register professional engineered drawings, when required by law, and to see that the drawings is employed by Nucor Buildings Systems and does not serve as construction documents unless specifically noted as such. Any use of these plans and/or specifications other than those set forth above is at the sole risk of the party using or relying upon them, and such party agrees to defend, indemnify and hold harmless Nucor Building Systems from any and all liability, real or alleged, arising out of such use. Submission or distribution of these plans and/or specifications to meet official regulatory requirements or for other purposes in connection with the publication of such plans and/or specifications is not to be construed as a publication in derogation of Nucor Building Systems' common law copyright or other reserved rights.

SHEET
E12 of 12

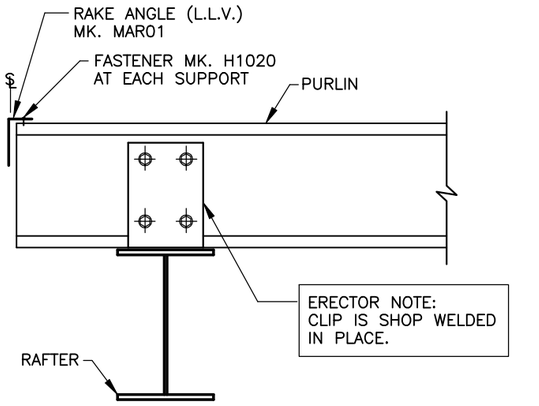

WELDED CLIP @ ENDWALL RAFTER

USE (4) 1/2" X 1 1/2" A307
BOLTS H0500/NUTS H0400
SEE ERECTOR NOTE FOR TYP. WASHER REQUIREMENTS

A7

BB0050

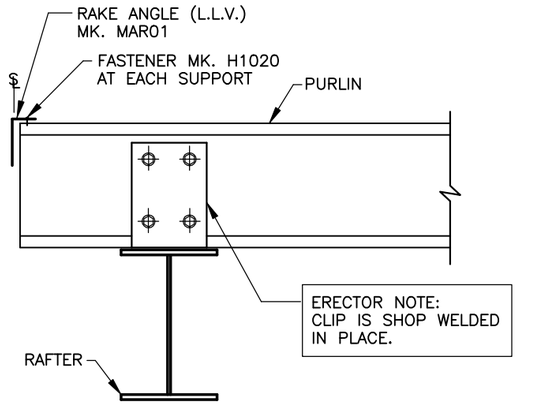

WELDED CLIP @ R/F ENDWALL

USE (4) 1/2" X 1 1/2" A307
BOLTS H0500/NUTS H0400
SEE ERECTOR NOTE FOR TYP. WASHER REQUIREMENTS

A10

BB0050

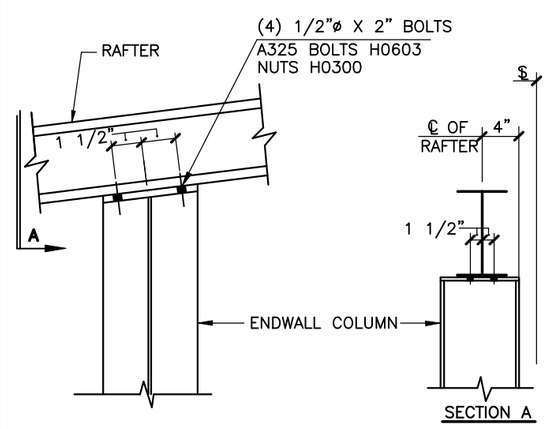

EW COLUMN TO RAFTER CONN

(CONTINUOUS RAFTER)
SEE ERECTOR NOTE FOR TYP. WASHER REQUIREMENTS

B5

AC0045

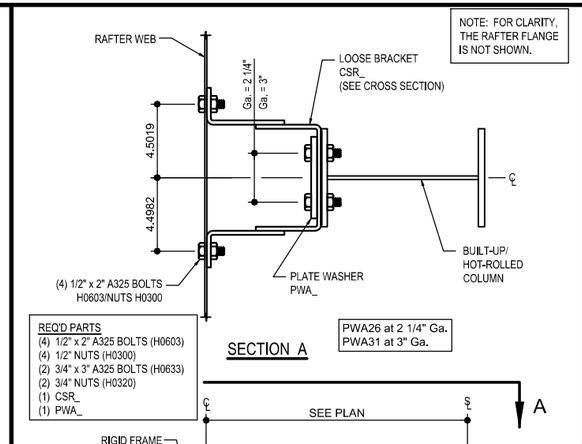

ENDWALL COL TO EXP. EW RAFTER CONNECTION

10" DEEP (MIN.) BU/HR COLUMN AND COLUMN EXTENSION AT FLUSH/INSET GIRTS
REFERENCE ERECTOR NOTE FOR TYPICAL WASHER REQUIREMENTS

B13

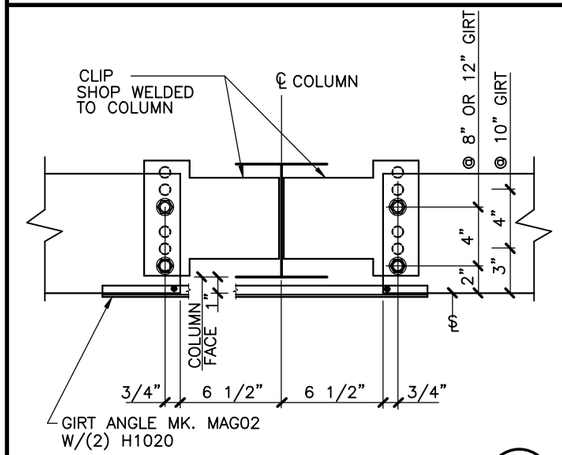

INSET GIRT @ INTERIOR BAY COL.

USE (4) 1/2" X 1 1/2" A307
BOLTS H0500/NUTS H0400
SEE ERECTOR NOTE FOR TYP. WASHER REQUIREMENTS

C4

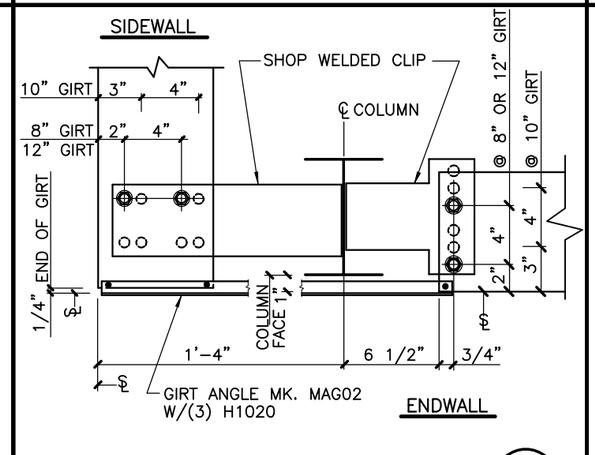

CORNER GIRT DETAIL

USE (4) 1/2" X 1 1/2" A307
BOLTS H0500/NUTS H0400
SEE ERECTOR NOTE FOR TYP. WASHER REQUIREMENTS

D6

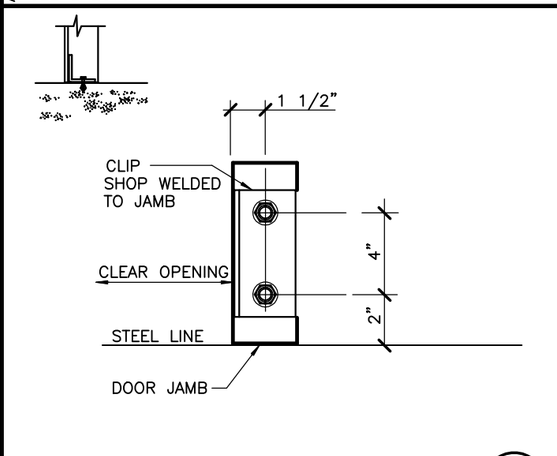

JAMB TO FINISH FLOOR CONN

ATTACHMENT TO SLAB BY OTHERS

E9

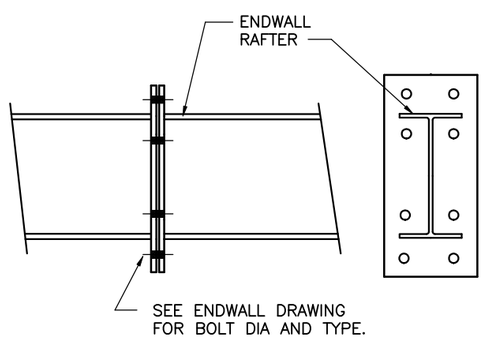

ENDWALL RAFTER SPLICE

F9

AC0170

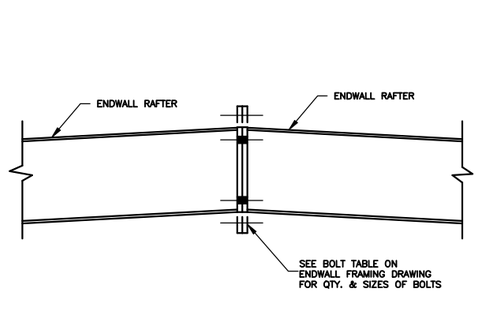

EW RAFTER RIDGE CONNECTION

W/O COLUMN

F11

AC0160

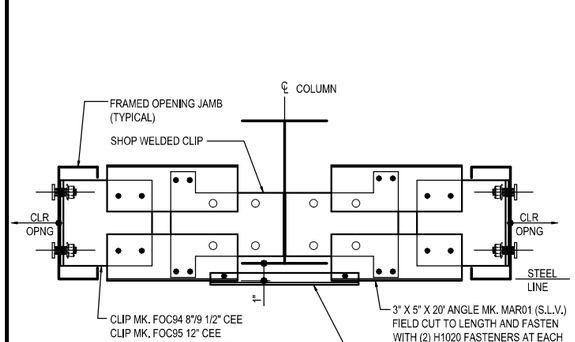

COLD FORMED JAMB SHOWN. HOT-ROLL SIMILAR

SW OR EW GIRT DETAIL

FRAMED OPENINGS AT INSET GIRT CONDITION
USE (4) 1/2" x 1 1/4" A307 BUTTON HEAD BOLTS H0510/NUTS H0400
REFERENCE ERECTOR NOTE FOR TYPICAL WASHER REQUIREMENTS

G1

ISSUE	DWN	CHK	ENG	PE	DATE
CONST. AB PLAN	NBS	EOP	CBM		7/24/2023
BUILDING DEPARTMENT REVIEW	WBS	DAN	CBM		7/31/2023

NUCOR BUILDING SYSTEMS
300 INDUSTRIAL PARKWAY, WATERLOO, IN 46793
PHONE: (260) 837-7891 FAX: (260) 837-7384
PO BOX 1006, 200 WHETSTONE RD, SWANSEA, SC 29160
PHONE: (803) 568-2100 FAX: (803) 568-2121
600 APACHE TRAIL, TERRELL, TX 75160
PHONE: (972) 524-8484 FAX: (972) 524-8417
1050 WATER LANE, BRIGHAM CITY, UT 84302
PHONE: (435) 919-3100 FAX: (435) 919-3101

PROJECT NAME: WENDOVER FS #13 REPLACEMENT
WENDOVER, NV

CUSTOMER NAME: MICHAEL CLAY CORP
WINNEMUCCA, NV

JOB NUMBER: U23G0555A

SHEET TITLE

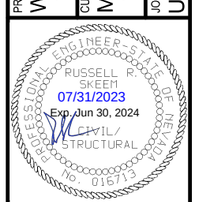

This set contains only the materials designed by the Nucor Building Systems, a division of Nucor Corporation. The drawings and the information shown thereon are the product of Nucor Building Systems engineering staff. Nucor Buildings Systems does not serve as the registered professional engineer of record and shall not be construed as such.

SHEET: D1 of 20

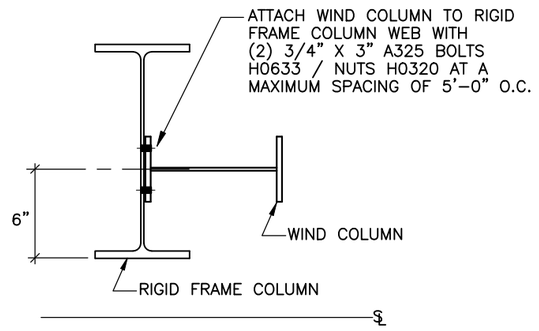

WIND COLUMN TO RIGID FRAME — H9

SEE ERECTOR NOTE FOR TYP. WASHER REQUIREMENTS

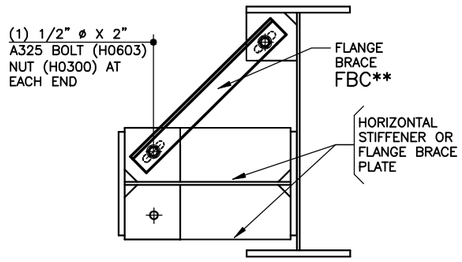

TYPICAL FLANGE BRACE CONNECTION AT FRAME COLUMN AND PORTAL COLUMN — H12

AJ0050

(REFER TO CROSS SECTIONS & ELEVATIONS FOR PART NUMBERS)

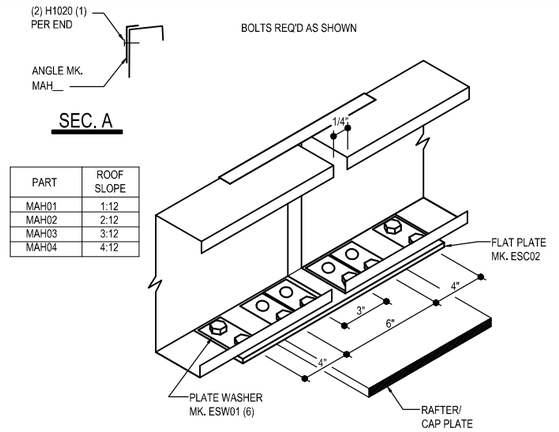

PART	ROOF SLOPE
MAH01	1:12
MAH02	2:12
MAH03	3:12
MAH04	4:12

EAVE STRUT WITH STRUT PLATE — I4

LOW EAVE FLUSH/INSET SW GIRT CONDITION
USE (8) 1/2" X 2" A325 BOLT H0603/ NUT H0300 U.N.O.

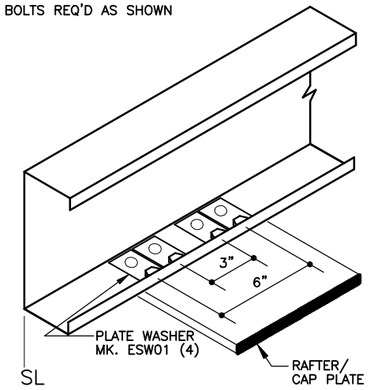

EAVE STRUT — J4

LOW EAVE FLUSH/INSET SW GIRT CONDITION
USE (4) 1/2" X 2" A325
BOLT H0603/NUT H0300 U.N.O.

PART #	MTRL SIZE	MTRL THICK.
S8Z84	8" ZEE	.060 MIN.
S8C84	8" CEE	.060 MIN.
S1Z84	10" ZEE	.060 MIN.
S1C84	10" CEE	.060 MIN.
S2Z84	12" ZEE	.075 MIN.
S2C84	12" CEE	.075 MIN.

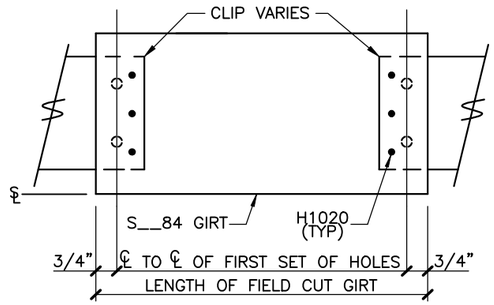

UNPUNCHED SHORT GIRT DETAIL — K2

FIELD CUT TO LENGTH AND FASTEN WITH (3) H1020 AT EACH END

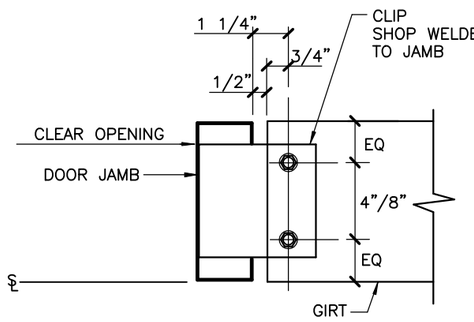

GIRT TO JAMB CONNECTION — K3

USE (2) 1/2" X 1 1/2" A307
BOLTS H0500/NUTS H0400
SEE ERECTOR NOTE FOR TYP. WASHER REQUIREMENTS

ERECTOR NOTE:
PRE-DRILL HOLES @ NESTED ZEE GIRTS & DOUBLE CEE GIRTS IF REQUIRED.

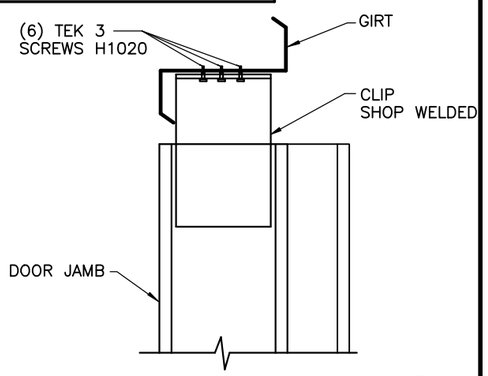

DOOR JAMB TO GIRT CONNECTION — L8

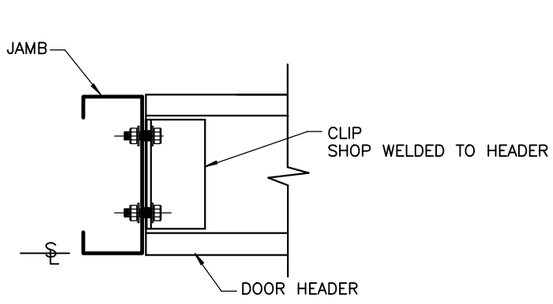

HEADER/SILL TO JAMB CONNECTION — M3

USE (2) 1/2" X 1 1/2" A307
BOLTS H0500/NUTS H0400 (U.N.O.)
SEE ERECTOR NOTE FOR TYP. WASHER REQUIREMENTS

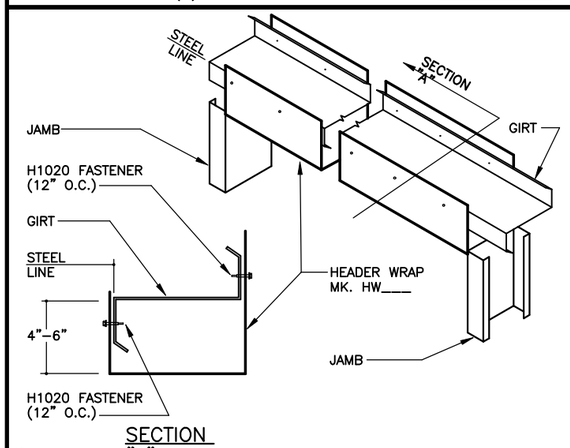

HEADER WRAP DETAIL — M16

CG0025

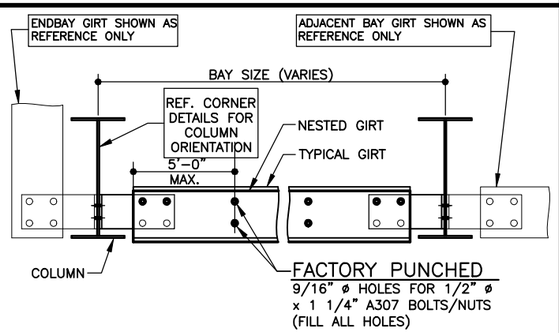

REFER TO THE STANDARD **FLUSH/INSET GIRT DETAIL** FOR CLIP MARK NUMBERS AND BOLT QUANTITIES AT THE GIRT TO COLUMN CONNECTIONS.

THE NESTED GIRT WILL BE THE SAME LENGTH AND HAVE THE SAME PUNCHING AS THE TYPICAL GIRTS IN THE BAYS THEY ARE REQUIRED.

FLUSH/INSET NESTED GIRT DETAIL — N2

- REFERENCE ERECTOR NOTE FOR TYPICAL WASHER REQUIREMENTS
- THE QUANTITY OF 1/2" x 1 1/4" A307 BOLTS (MK. H0500) & NUTS (MK. H0400) VARIES DEPENDING ON THE BAY SIZE.

CM0005

ROD DIAMETER	MARK NUMBER	HILLSIDE WASHERS	FLAT WASHERS	A307/A325 NUTS	COUPLING NUTS
5/8" ø	RD05-__	(2) H0930	(2) H0210	(2) H0310	H0810
3/4" ø	RD06-__	(2) H0930	(2) H0220	(2) H0320	H0820
7/8" ø	RD07-__	(2) H0930	(2) H0230	(2) H0325	H0830
1" ø	RD08-__	(2) H0960	(2) H0240	(2) H0330	H0840
1 1/8" ø	RD09-__	(2) H0960	(2) H0250	(2) H0450	H0850
1 1/4" ø	RD10-__	(2) H0960	(2) H0260	(2) H0340	H0860

SEE PLANS AND ELEVATIONS FOR BRACING MARK NUMBERS

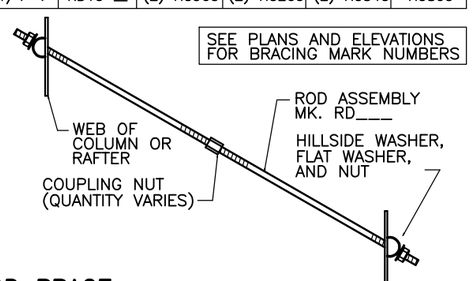

ROD BRACE — Q3

WEB TO WEB

AF0010

ISSUE	DWN	CHK	ENG	PE	DATE
CONST. AB PLAN	NBS	EOP	CBM		7/24/2023
BUILDING DEPARTMENT REVIEW	WBS	DAN	CBM		7/31/2023

NUCOR BUILDING SYSTEMS
300 INDUSTRIAL PARKWAY, WATERLOO, IN 46793
PHONE: (260) 837-7891 FAX: (260) 837-7384
PO BOX 1006, 200 WHETSTONE RD, SWANSEA, SC 29160
PHONE: (803) 568-2100 FAX: (803) 568-2121
600 APACHE TRAIL, TERRELL, TX 75160
PHONE: (972) 524-1201 FAX: (972) 524-1417
1050 WATER LANE, BRIGHAM CITY, UT 84302
PHONE: (435) 919-3100 FAX: (435) 919-3101

PROJECT NAME: WENDOVER FS #13 REPLACEMENT
WENDOVER, NV

CUSTOMER NAME: MICHAEL CLAY CORP
WINNEMUCCA, NV

JOB NUMBER: U23G0555A

SHEET TITLE:

RUSSELL R. SKEEM
07/31/2023
Exp. Jun 30, 2024
CIVIL/ STRUCTURAL

This set of plans and/or specifications is the property of Nucor Building Systems, a division of Nucor Corporation. The drawings and the information contained therein shall not be used in whole or part except as the product of Nucor Building Systems. Only a Nucor Building Systems professional engineer registered in the state where these drawings is employed by Nucor Buildings Systems and does not serve as the engineer of record for any project or noord and shall not be construed as such.

SHEET: D2 of 20

TYPICAL FIELD WELD REQUIREMENTS ERECTOR NOTE:

(UNLESS NOTED OTHERWISE ON DRAWINGS)

ALL FIELD WELDING **MUST BE PERFORMED BY AWS/CWB CERTIFIED WELDERS WHO ARE QUALIFIED** FOR THE WELDING PROCESSES AND POSITIONS INDICATED.

ALL WORK MUST BE **COMPLETED AND INSPECTED IN ACCORDANCE WITH THE APPLICABLE AWS/CWB SPECIFICATIONS.**

WELD ELECTRODES USED FOR THE SMAW (OR STICK) WELD PROCESS **MUST BE 70 KSI/483 MPa MATERIAL AND LOW HYDROGEN CONTENT.**

GALVANIZED STEEL FIELD WELDING RECOMMENDATIONS

PREPARATION OF WELD AREA

AWS D–19.0, WELDING ZINC COATED STEEL, CALLS FOR WELDS TO BE MADE ON STEEL THAT IS FREE OF ZINC IN THE AREA TO BE WELDED. FOR GALVANIZED STRUCTURAL COMPONENTS, THE ZINC COATING SHOULD BE REMOVED AT LEAST ONE TO FOUR INCHES (2.5–10 cm) FROM EITHER SIDE OF THE INTENDED WELD ZONE AND ON BOTH SIDES OF THE WORKPIECE. GRINDING BACK THE ZINC COATING IS THE PREFERRED AND MOST COMMON METHOD; BURNING THE ZINC AWAY OR PUSHING BACK THE MOLTEN ZINC FROM THE WELD AREA ARE ALSO EFFECTIVE.

TOUCH–UP OF WELD AREA

WELDING ON GALVANIZED SURFACES DESTROYS THE ZINC COATING ON AND AROUND THE WELD AREA. RESTORATION OF THE AREA WILL BE PERFORMED IN ACCORDANCE WITH ASTM A 780, STANDARD PRACTICE FOR REPAIR OF DAMAGED AND UNCOATED AREAS OF HOT–DIP GALVANIZED COATINGS, WHICH SPECIFIES THE USE OF PAINTS CONTAINING ZINC DUST, ZINC–BASED SOLDERS OR SPRAYED ZINC. ALL TOUCHUP AND REPAIR METHODS ARE CAPABLE OF BUILDING A PROTECTIVE LAYER TO THE THICKNESS REQUIRED BY ASTM A 780.

SAFETY & HEALTH

WHEN WELDING DIRECTLY ON GALVANIZED STEEL IS UNAVOIDABLE, OSHA PERMISSIBLE EXPOSURE LIMITS (PELS) MAY BE EXCEEDED AND EVERY PRECAUTION, INCLUDING HIGH–VELOCITY CIRCULATING FANS WITH FILTERS, AIR RESPIRATORS AND FUME–EXTRACTION SYSTEMS SUGGESTED BY AWS, SHOULD BE EMPLOYED. FUMES FROM WELDING GALVANIZED STEEL CAN CONTAIN ZINC, IRON, AND LEAD. FUME COMPOSITION TYPICALLY DEPENDS ON THE COMPOSITION OF THE MATERIALS USED, AS WELL AS THE HEAT APPLIED BY THE PARTICULAR WELDING PROCESS. IN ANY EVENT, GOOD VENTILATION MINIMIZES THE AMOUNT OF EXPOSURE TO FUMES.

PRIOR TO WELDING ON ANY METAL, CONSULT ANSI/ASC Z–49.1, SAFETY IN WELDING, CUTTING AND ALLIED PROCESSES, WHICH CONTAINS INFORMATION ON THE PROTECTION OF PERSONNEL AND THE GENERAL AREA, VENTILATION AND FIRE PREVENTION.

INFORMATION COURTESY OF AMERICAN GALVANIZERS ASSOCIATION

TYPICAL FIELD WELD REQUIREMENTS

NAA0040

COLLATERAL DEAD LOADS, UNLESS OTHERWISE NOTED, ARE ASSUMED TO BE UNIFORMLY DISTRIBUTED. WHEN SUSPENDED SPRINKLER SYSTEMS, LIGHTING, HVAC EQUIPMENT, CEILINGS, ETC. ARE SUSPENDED FROM ROOF MEMBERS, CONSULT ENGINEER OF RECORD IF THESE CONCENTRATED LOADS EXCEED 500 POUNDS (USING THE WEB MOUNT DETAIL) OR 200 POUNDS (USING THE FLANGE MOUNT DETAIL), OR IF INDIVIDUAL MEMBERS ARE LOADED SIGNIFICANTLY MORE THAN OTHERS.

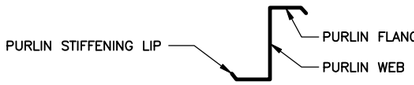

GENERAL RESTRICTION:

UNDER NO CIRCUMSTANCES CAN THE PURLIN STIFFENING LIP BE FIELD MODIFIED FROM THE FACTORY SUPPLIED CONDITION. ALSO DO NOT HANG ANYTHING FROM PURLIN STIFFENING LIP.

OPTIONS FOR SUPPORT ATTACHMENTS

OPTION A (200 LBS MAX)
DRILL SUPPORT THROUGH THE BOTTOM FLANGE OF THE PURLIN.

OPTION B (500 LBS MAX)
SUPPORT ANGLE OR SOME OTHER TYPE OF BRACKET. (NOT BY NBS) SUPPORT THROUGH PURLIN WEB.

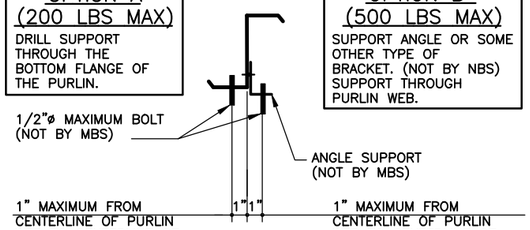

OPTION C: (200 LBS MAX)
IF PURLIN FLANGE SUPPORT CLAMPS ARE USED.

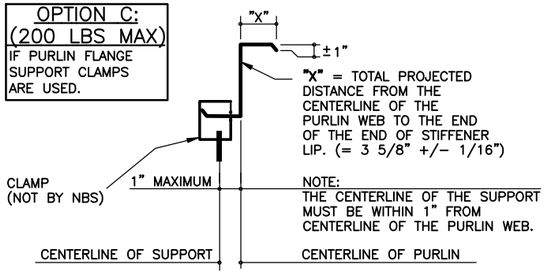

B00010

PURLIN SUPPORT METHODS

NBD0130

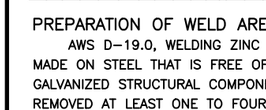

SLOT TO SLOT CONNECTIONS

WASHERS ARE REQUIRED ON BOTH SIDES OF MATERIAL IF SLOTS ARE USED ON BOTH SIDES (NOTE LAPPED ZEE MEMBER EXCEPTION).

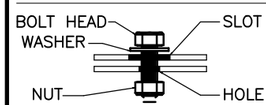

SLOT TO HOLE CONNECTIONS

ONE WASHER REQUIRED ON SLOTTED SIDE ONLY.

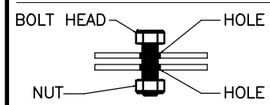

HOLE TO HOLE CONNECTIONS

NO WASHERS ARE REQUIRED WHEN SLOTS ARE NOT USED.

WASHER PART NUMBERS

H0200 – 1/2" FLAT WASHER	H0240 – 1" FLAT WASHER
H0210 – 5/8" FLAT WASHER	H0250 – 1 1/8" FLAT WASHER
H0220 – 3/4" FLAT WASHER	H0260 – 1 1/4" FLAT WASHER
H0230 – 7/8" FLAT WASHER	

TYPICAL WASHER REQUIREMENTS ERECTOR NOTE

(UNLESS NOTED OTHERWISE ON DRAWINGS)

NAA0030

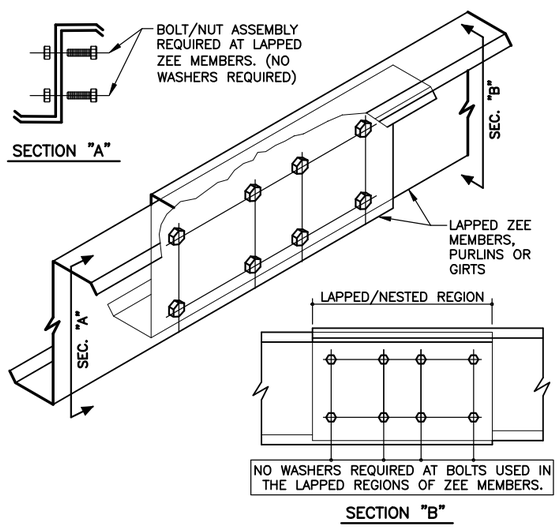

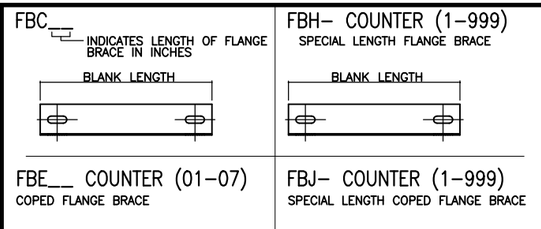

AG0003

FLANGE BRACE MARK NUMBERS

NAG0003

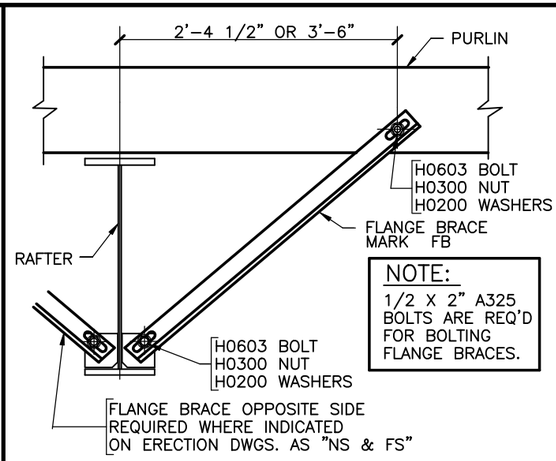

AG0010

TYP FLANGE BRACE @ PURLIN & RAFTER

NOTE: SEE PLANS AND ELEVATIONS FOR FLANGE BRACE PART MARKS

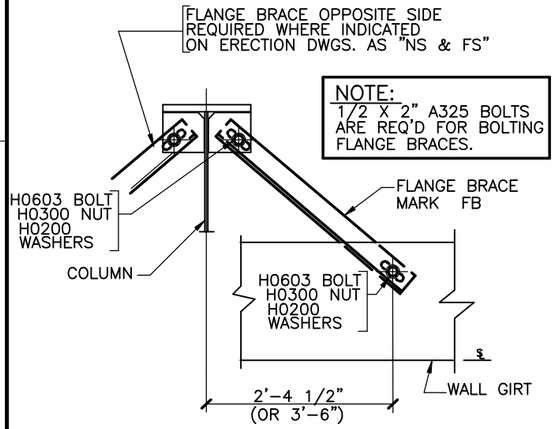

A60030

TYP FLANGE BRACE @ BU COL & GIRT

NOTE: SEE PLANS AND ELEVATIONS FOR FLANGE BRACE PART MARKS

ERECTOR NOTE: UNLESS SPECIFICALLY NOTED OTHERWISE, STANDARD ZEE GIRT ORIENTATION IS TO HAVE THE GIRT TOED DOWN AT THE STEEL LINE AS SHOWN IN THE DETAIL BELOW.

UNLESS SPECIFICALLY NOTED OTHERWISE, STANDARD CEE GIRT ORIENTATION IS TO HAVE THE GIRT TOED UP AS SHOWN IN THE DETAIL BELOW. STANDARD CLIP ATTACHMENT IS BELOW THE GIRT, HOWEVER SOME DETAILS REQUIRE THAT THE CLIP BE ABOVE THE GIRT. (REFER TO THE GIRT DETAILS ON THE ERECTION DRAWINGS FOR REQUIREMENTS) BOTH CLIP ATTACHMENTS ARE SHOWN IN THE DETAIL BELOW.

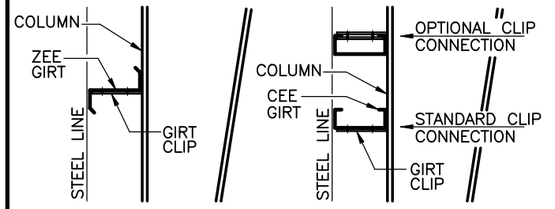

ZEE GIRT ORIENTATION

CEE GIRT ORIENTATION

STANDARD GIRT ORIENTATION DETAIL

NOTE: BYPASS GIRT CONDITION IS SHOWN FOR REFERENCE ONLY. YOUR PROJECT MAY HAVE FLUSH OR INSET GIRTS.

CC0005

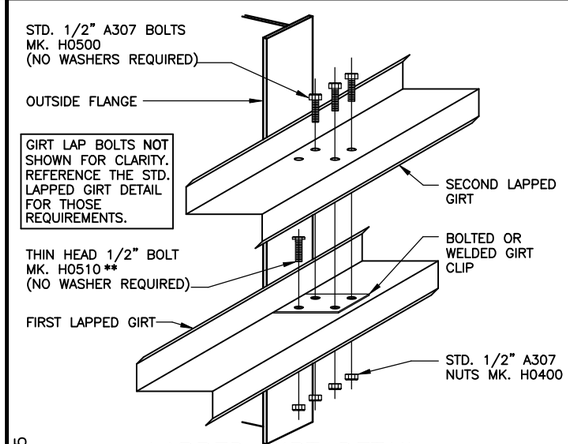

CC0015

LAPPED GIRT DETAIL

LAPPED GIRTS @ INTERIOR BAY COLUMNS

** THE THIN HEAD 1/2" A307 BOLT MUST BE INSTALLED INTO THE FIRST GIRT AND CLIP OF A LAPPED CONDITION. THE BOLT/NUT ASSEMBLY MUST BE WRENCH TIGHT PRIOR TO THE SECOND LAPPED GIRT BEING INSTALLED.

ISSUE	DWN	CHK	ENG	PE	DATE
CONST. AB PLAN	NBS	EOP	CBM		7/24/2023
BUILDING DEPARTMENT REVIEW	WBS	DAN	CBM		7/31/2023

NUCOR BUILDING SYSTEMS
300 INDUSTRIAL PARKWAY, WATERLOO, IN 46793
PHONE: (260) 837–7891 FAX: (260) 837–7384
PO BOX 1000, 200 WHETSTONE RD, SWANSEA, SC 29160
PHONE: (803) 568–2100 FAX: (803) 568–2121
600 APACHE TRAIL, TERRELL, TX 75160
PHONE: (972) 524–9001 FAX: (972) 524–9417
1050 WATERS LANE, BRIGHAM CITY, UT 84302
PHONE: (435) 919–3100 FAX: (435) 919–3101

PROJECT NAME: WENDOVER FS #13 REPLACEMENT
WENDOVER, NV

CUSTOMER NAME: MICHAEL CLAY CORP
WINNEMUCCA, NV

JOB NUMBER: U23G0555A

SHEET TITLE

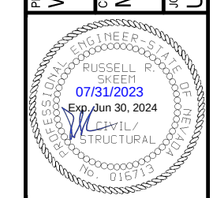

This set of plans (only) by the materials designated by Nucor Building Systems, a division of Nucor Corporation, the drawings and the information contained therein are the property of Nucor Building Systems and do not register professional engineer's seal on those drawings is employed by Nucor Buildings Systems and does not serve as professional engineer of record and shall not be construed as such.

SHEET

D3 of 20

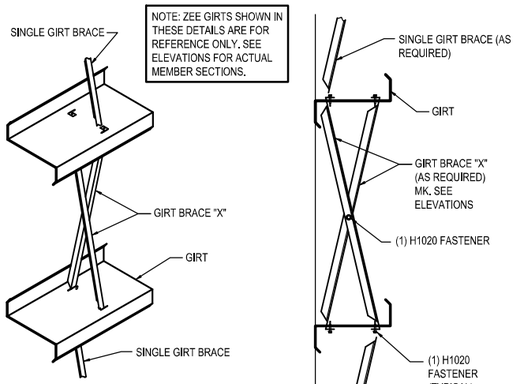

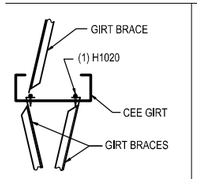

NOTE: THE 'CEE' SECTION MAY BE TOED UP OR DOWN.

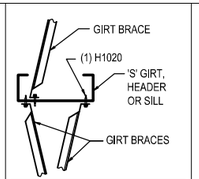

NOTE: THE 'CEE' SECTION MAY BE TOED UP OR DOWN.

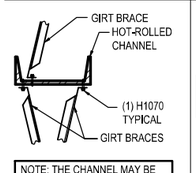

NOTE: THE CHANNEL MAY BE TOED UP OR DOWN.

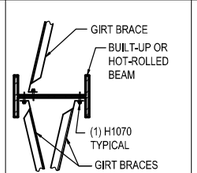

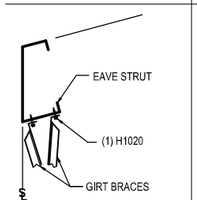

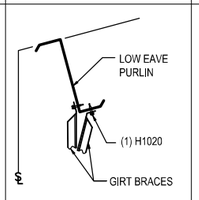

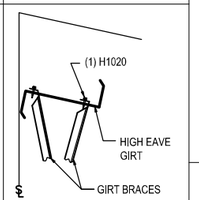

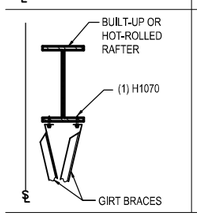

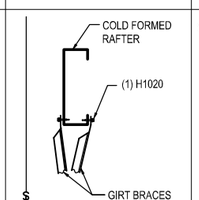

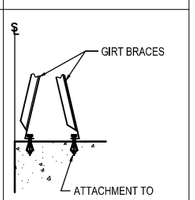

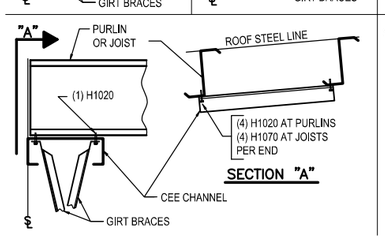

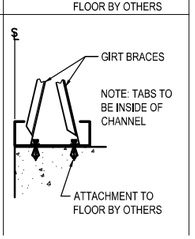

INSTALLATION INSTRUCTIONS

1) FOR SINGLE GIRT BRACE, INSERT ANGLE INTO THE FACTORY PUNCHED SLOTS. BEND TABS AS SHOWN AND FASTEN THROUGH TAB WITH (1) H1020 FASTENER PER END.

2) FOR GIRT BRACE "X", INSERT ANGLES "BACK-TO-BACK" INTO THE FACTORY PUNCHED SLOTS. BEND TABS AS SHOWN AND FASTEN THROUGH TAB WITH (1) H1020 FASTENER PER END.

3) CONNECT GIRT BRACE "X" AT THE ANGLE INTERSECTION WITH (1) H1020 FASTENER.

4) GIRT BRACING IS NOT TO DISTORT OR ALTER GIRTS FROM THIER INTENDED SHAPE AND LOCATION.

5) SEE DETAILS BELOW FOR ADDITIONAL INFORMATION WHEN ATTACHING TO ALTERNATE FRAMING MEMBERS.

PLAN VIEW OF (2) GIRT BRACING ROWS PER BAY

1) INSTALL (2) REQUIRED ROWS OF GIRT BRACING REGARDLESS OF THE BAY LENGTH. GIRT BRACING IS SPACED AS SHOWN IN THE DETAIL BELOW.

2) SEE WALL ELEVATION(S) FOR GIRT BRACING MARK NUMBERS, QUANTITIES AND LOCATIONS.

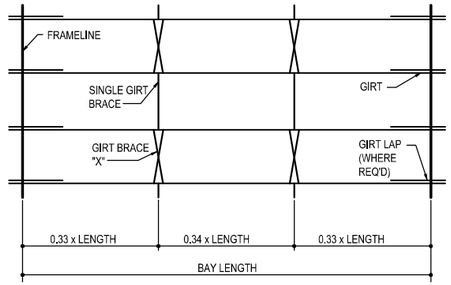

PLAN VIEW OF (3) GIRT BRACING ROWS PER BAY

1) INSTALL (3) REQUIRED ROWS OF GIRT BRACING REGARDLESS OF THE BAY LENGTH. GIRT BRACING IS SPACED AS SHOWN IN THE DETAIL BELOW.

2) SEE WALL ELEVATION(S) FOR GIRT BRACING MARK NUMBERS, QUANTITIES AND LOCATIONS.

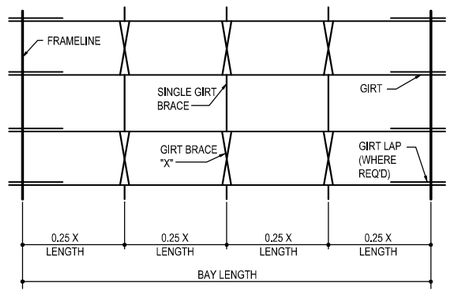

PLAN VIEW OF (4) GIRT BRACING ROWS PER BAY

1) INSTALL (4) REQUIRED ROWS OF GIRT BRACING REGARDLESS OF THE BAY LENGTH. GIRT BRACING IS SPACED AS SHOWN IN THE DETAIL BELOW.

2) SEE WALL ELEVATION(S) FOR GIRT BRACING MARK NUMBERS, QUANTITIES AND LOCATIONS.

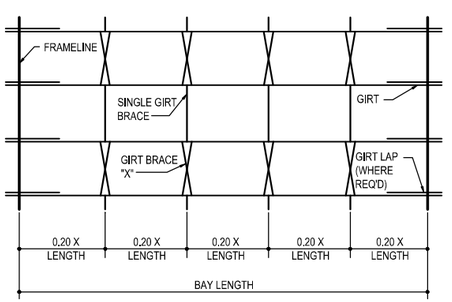

GIRT BRACING ATTACHMENT METHODS

ISSUE	DWN	CHK	ENG	PE	DATE
CONST. AB PLAN	NBS	EOP	CBM		7/24/2023
BUILDING DEPARTMENT REVIEW	WBS	DAN	CBM		7/31/2023

NUCOR BUILDING SYSTEMS
300 INDUSTRIAL PARKWAY, WATERLOO, IN 46793
PHONE: (260) 837-7891 FAX: (260) 837-7384
PO BOX 1006, 200 WHETSTONE RD, SWANSEA, SC 29160
PHONE: (803) 568-2100 FAX: (803) 568-2121
600 APACHE TRAIL, TERRELL, TX 75160
PHONE: (972) 524-4417 FAX: (972) 524-4445
1050 WATER LANE, BRIGHAM CITY, UT 84302
PHONE: (435) 919-3100 FAX: (435) 919-3101

PROJECT NAME: WENDOVER FS #13 REPLACEMENT
WENDOVER, NV

CUSTOMER NAME: MICHAEL CLAY CORP
WINNEMUCCA, NV

JOB NUMBER: U23G0555A

SHEET TITLE

ENGINEER STATE OF UTAH PROFESSIONAL
RUSSELL R. SKEEN
07/31/2023
Exp. Jun 30, 2024
CIVIL/STRUCTURAL
No. 016713

This set of plans and/or specifications is the property of Nucor Building Systems, a division of Nucor Corporation. The drawings and the designs incorporated therein, as an instrument of service, are the property of Nucor Building Systems and are not to be used in any way without the prior written consent of Nucor Building Systems. Only those drawings that have been prepared by a registered professional engineer employed by Nucor Building Systems and bear the engineer's seal and signature of record are to be considered as such.

SHEET: D4 of 20

SUGGESTED INITIAL PROCEDURES FOR INSTALLER:

1) CHECK ALL APPLICABLE FEDERAL, STAE AND LOCAL CODES TO VERIFY COMPLIANCE WITH THE CODE.

2) BE CERTAIN THAT SITE CONDITIONS ARE SUCH THAT SAFE WORKING PRACTICES ARE STRICTLY OBSERVED.

3) REVIEW ALL INSTALLATION DRAWINGS AND ASSOCIATED PROJECT DOCUMENTS.

4) CONSULT WITH THE GENERAL CONTRACTOR, DESIGN ENGINEER, ARCHITECT AND/OR OWNER TO CONFIRM THOSE RECOMMENDED.

5) COMPLY WITH ALL SAFETY REGULATIONS.

IT IS THE RESPONSIBLILITY OF THE DESIGNER / CONTRACTOR / INSTALLER TO ENSURE THAT THE DETAILS AND INSTALLATION PROCEDURES ARE ADAPTED TO MEET PARTICULAR BUILDING REQUIREMENTS.
THE METAL BUILDING / PANEL SUPPLIER SHALL NOT BE HELD LIABLE FOR ANY AND ALL CLAIMS ARISING FROM LACK OF PROPER INSTALLATION. THE DESIGNER / INSTALLER MUST BE AWARE OF AND ALLOW FOR EXPANSION AND CONTRACTION OF WALL PANELS WHEN DESIGNING AND/OR INSTALLING WALL PANELS.

SOME FIELD CUTTING IS PART OF NORMAL ERECTION WORK. WORKMANSHIP SHALL CONFORM TO THE HIGHEST INDUSTRY STANDARDS. A CERTAIN AMOUNT OF WAVINESS CALLED "OIL CANNING" MAY EXIST IN THE PANEL. MINOR WAVINESS IS NOT SUFFICIENT CAUSE FOR REJECTION AND DOES NOT AFFECT THE STRUCTURAL INTEGRITY OF THE PANEL. MINIMIZING OR ELIMINATION THIS EFFECT CAN BE ACCOMPLISHED BY USING SIMPLE INDUSTRY STANDARD PROCEDURES DURING SURFACE PREPARATION.

NOTES FOR HANDLING PANELS AND COMPONENTS:

INSULATED PANELS ARE CAREFULLY INSPECTED AND BUNDLED PRIOR TO LOADING FOR SHIPMENT. IT IS THE RESPONSIBILITY OF THE TRANSPORTATION COMPANY TO DELIVER THESE COMPONENTS UNDAMAGED. IT IS THE CONSIGNEE'S RESPONSIBILITY TO INSPECT THE SHIPMENT FOR DAMAGE AND SHORTAGES WHEN IT IS RECEIVED.

WHEN A SHIPMENT IS RECEIVED, CHECK EACH ITEM AGAINST THE BILL OF LADING FOR QUANTITY, LENGTH, DAMAGE, ETC. IF A SHORTAGE OR DAMAGE IS FOUND, MAKE SURE A NOTATION OF IT IS MADE ON THE BILL OF LADING AND SIGNED BY THE DRIVER. THE MANUFACTURE CANNOT BE RESPONSIBLE FOR SHORTAGES OR DAMAGED MATERIALS UNLESS THEY ARE NOTED ON THE BILL OF LADING.

IN THE CASE OF PACKAGED COMPONENTS (SUCH AS CLIPS, FASTENERS, AND SEALANTS, ECT.), THE QUANTITIES ARE MARKED ON THEIR CONTAINER AND SHOULD BE CHECKED AGAINST THE BILL OF MATERIALS.

IT IS THE CUSTOMER'S RESPONSIBILITY TO MAKE ANY DAMAGE CLAIM. IMMEDIATELY NOTIFY THE DESIGNATED CUSTOMER SERVICE COORDINATOR OF ANY SHORTAGES OR DAMAGED MATERIALS. THIS WILL HELP TO MINIMIZE ANY ERECTION DELAYS THAT MAY RESULT FROM THE SHORTAGE OR DAMAGED MATERIALS.

UPON ARRIVAL OF PANELS, FORKLIFTS OR HOISTING EQUIPMENT WILL BE REQUIRED TO UNLOAD AND POSITION THE PANEL BUNDLES AND ACCESSORY CRATES FOR JOBSITE STORAGE AND INSTALLATION.

EXTREME CARE SHOULD BE TAKEN TO AVOID BUMPING THE PANELS WHILE LIFTING AND MANEUVERING. IN ALL CASES PANELS SHOULD NOT DEFLECT SIGNIFICANTLY IN THE LIFTING PROCESS.

IN HANDLING PANELS INDIVIDUALLY, ALL PERSONNEL MUST WEAR THE PROPER CLOTHING, PROTECTIVE EYE WEAR, AND GLOVES.

TO HELP PREVENT DAMAGES TO THE SURFACES AND EDGES:
- ALWAYS LIFT THE PANELS WHEN REMOVING THEM FROM BUNDLES, NEVER DRAG THEM.
- NEVER LIFT THE PANEL FROM THE FLAT POSITION FROM THE HOOK OF THE VERTICAL SEAM.
- DO NOT CARRY PANELS IN THE FLAT POSITION.

UNLOADING:

PANELS ARE SPIRAL WRAPPED WITH STRETCH-FILM AND SHIPPED FLAT. PANEL BUNDLES ARE REINFORCED AT SPECIFIED LIFTING POINTS TO PREVENT DAMAGE WHEN LIFTING. SEE FIGURE'S 1 AND 2 IN THIS SECTION TO DETERMINE WHERE THE LIFTING POINTS ARE FOR THE PANEL BUNDLES.

UNLOADERS MUST TAKE CARE THAT FORKLIFT FORKS ARE LOCATED AT THE PARTICLE BOARD ON THE PANEL BUNDLES BEFORE LIFTING.

EXTREME CARE SHOULD BE TAKEN TO AVOID BUMPING OR DROPPING THE PANELS WHEN LIFTING AND MANEUVERING.

WHEN UNLOADING BUNDLES OF 36'-0" OR LONGER IN LENGTH, TWO OR MORE LIFTING POINTS MAY BE REQUIRED. OVER ENGAGEMENT OF FORKS WILL CAUSE DAMAGE TO THE MATERIALS LOCATED ON THE OPPOSITE SIDE OF THE BUNDLE BEING LIFTED.

WHEN AN OVERHEAD CRANE IS USED, REINFORCED NYLON SLINGS OR STRAPS SHOULD BE USED (NO CHAINS OR CABLES SHOULD COME IN CONTACT WITH THE PANELS), ALONG WITH SUITABLE STIFF INSERTS LOCATED AT TOP AND BOTTOM OF THE BUNDLES AT THE SLING POSITIONS TO PROTECT THE PANELS FROM DAMAGE. ALSO, PLACE FOAM BLOCKS ON THE SIDES OF BUNDLES AT ALL SLING LOCATIONS.

NOTES:

REINFORCED LIFTING POINTS ARE CLEARLY MARKED ON THE PANEL BUNDLE (SEE FIGURES 1 & 2)

LONG LENGTH PANELS HAVE TWO OR MORE LIFTING POINTS (SEE FIGURE 2).

USE EXTREME CARE TO AVOID BUMPING OR DROPPING THE PANELS WHILE LIFTING AND MANEUVERING.

HOIST THE PANELS TO THE ROOF WITH THE AID OF NYLON SLINGS AND A SPREADER BAR TO PREVENT ANY CHANCE OF BENDING OR BUCKLING THE PANELS.

UNLOADING WITH A FORKLIFT:

- OVER ENGAGEMENT OF FORKS WILL CAUSE DAMAGE TO THE MATERIALS LOCATED ON THE OPPOSITE SIDE OF THE BUNDLE BEING LIFTED
- PANELS SHOULD NOT DEFLECT SIGNIFICANTLY IN THE LIFTING PROCESS.
- ENSURE THE FORKS STRADDLE THE DESIGNATED LIFT POINT.
- LIFT BUNDLES ONE AT A TIME WITH THE FORKLIFT

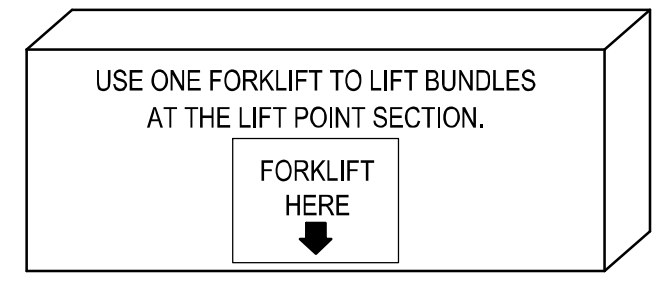

FIGURE 1
STANDARD LENGTH BUNDLES

- BE CAREFUL WHEN UNLOADING OR MOVING LONG LENGTH BUNDLES
- DO NOT POSITION YOUR LIFT AT THE CENTER OF THE BUNDLE, THIS MAY CAUSE PANEL DAMAGE.
- EACH FORKLIFT SHOULD STRADDLE ONE LIFT POINT.

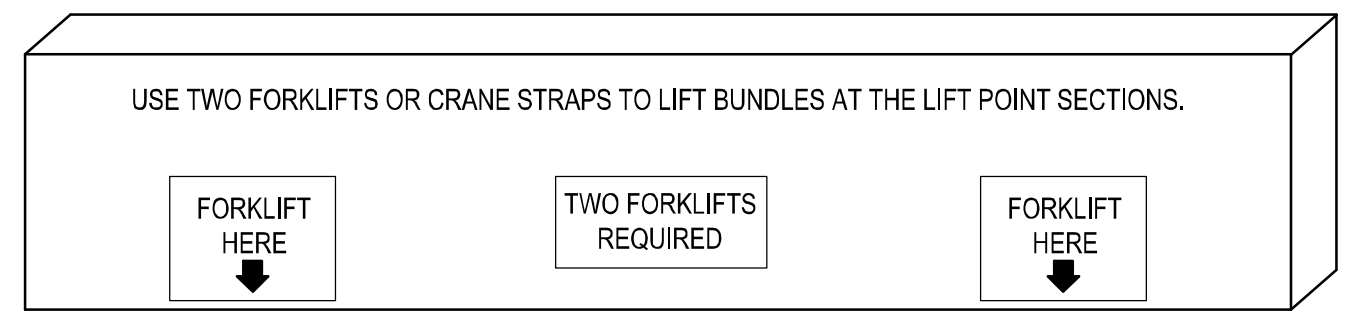

FIGURE 2
LONG LENGTH BUNDLES

UNLOADING WITH AN OVERHEAD CRANE:

- USE NYLON REINFORCED SLINGS OR STRAPS LOCATED AT A MINIMUM OF TWO POINTS ALONG THE LENGTH OF THE BUNDLE FOR CRANE LIFTING OF THE INDIVIDUAL BUNDLES.
- CHAINS OR CABLES SHOULD NOT COME IN CONTACT WITH THE PANELS.
- SUITABLY STIFF INSERTS SHOULD BE LOCATED AT TOP AND BOTTOM OF THE BUNDLES AT THE SLING POSITIONS TO PROTECT THE EDGES OF THE UPPER AND LOWER PANELS.
- PLACE FOAM BLOCKS ON THE SIDES OF BUNDLES AT ALL SLING LOCATIONS.
- WHEN BUNDLES ARE LONGER THAN 15'-0" IT IS SUGGESTED THAT A PROPERLY DESIGNED AND FABRICATED LIFTING BEAM IS USED.

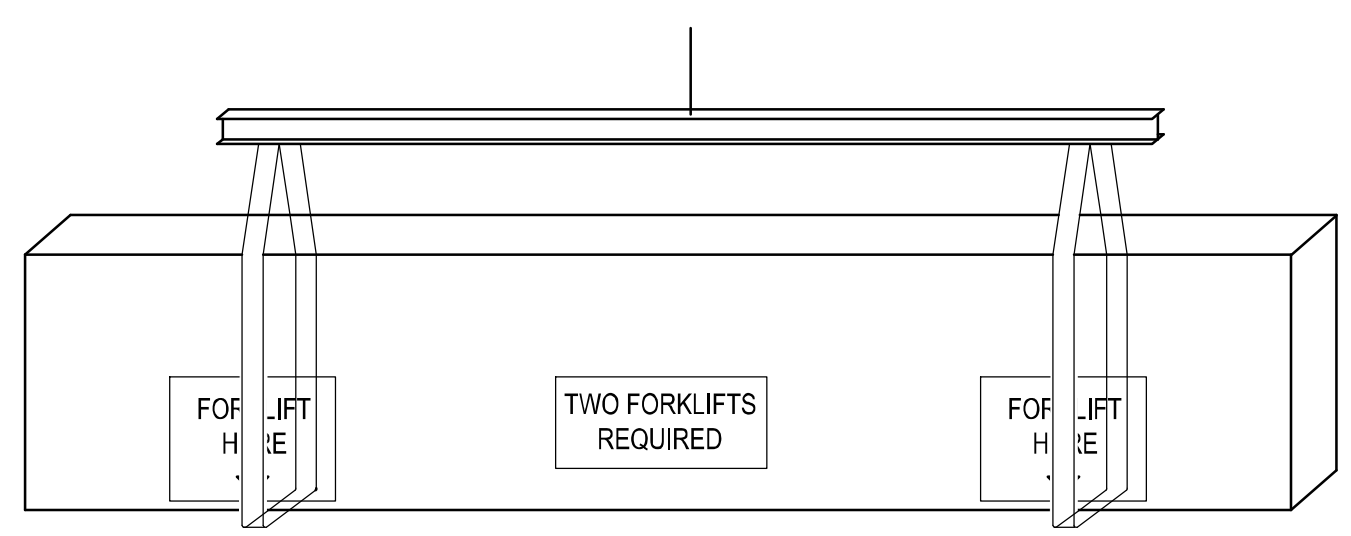

FIGURE 3
BUNDLES UNDER 4,000 LBS AND LESS THAN 44'-0"

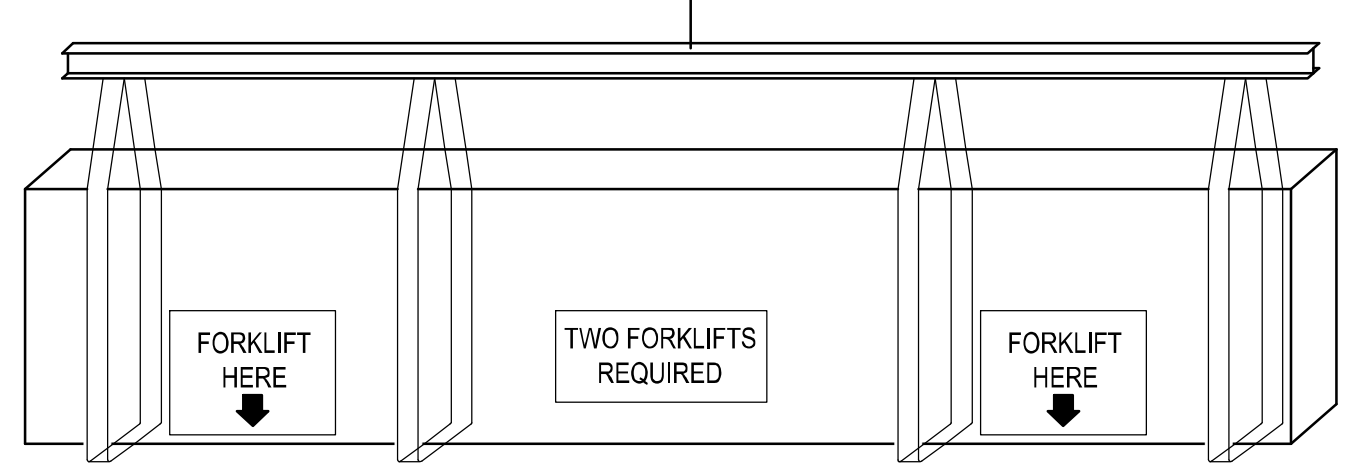

FIGURE 4
BUNDLES OVER 4,000 LBS AND LESS THAN 44'-0"

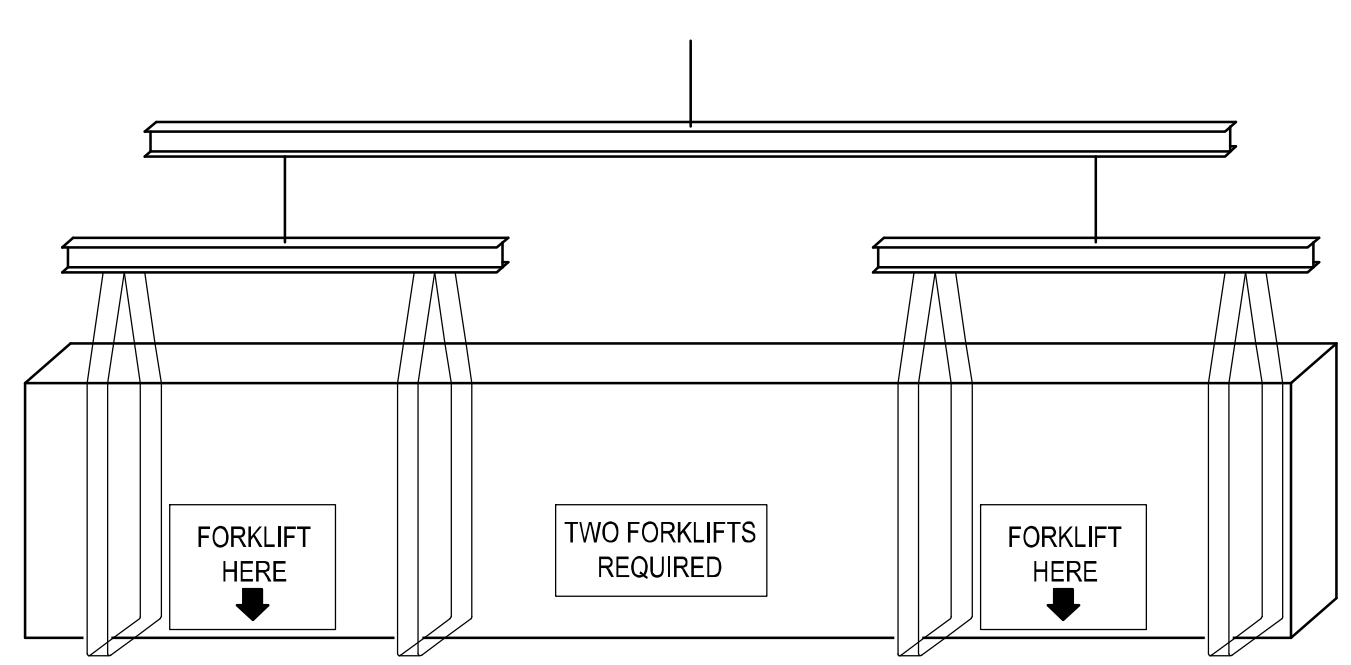

FIGURE 4
BUNDLES OVER 4,000 LBS AND MORE THAN 44'-0"

MANUALLY UNLOADING:

- ON SMALL PROJECTS UNLOADING OF THE PANELS MAY BE CARRIED OUT BY HAND.
  NOTE: SPECIAL CARE SHOULD BE TAKEN WHEN HANDLING. ALWAYS LIFT THE PANELS WHEN REMOVING FROM A BUNDLE, NEVER DRAG THEM.
- WARNING: TO PREVENT JOINT DAMAGE, NEVER LIFT THE PANEL FROM THE FLAT POSITION WITH THE HOOK OF THE VERTICAL SEAM. LIFT FROM THE BOTTOM SKIN.
- IT IS IMPORTANT THAT WHENEVER A PANEL IS HANDLED, PICKED-UP, MOVED OR CARRIED IT SHOULD BE TURNED ON EDGE FIRST. DO NOT CARRY PANEL WHILE FLAT.
- IMPORTANT NOTE: ALL PERSONNEL DOING THESE PROCEDURES MUST WEAR AT ALL TIMES THE PROPER CLOTHING, PROTECTIVE EYE WEAR AND GLOVES.

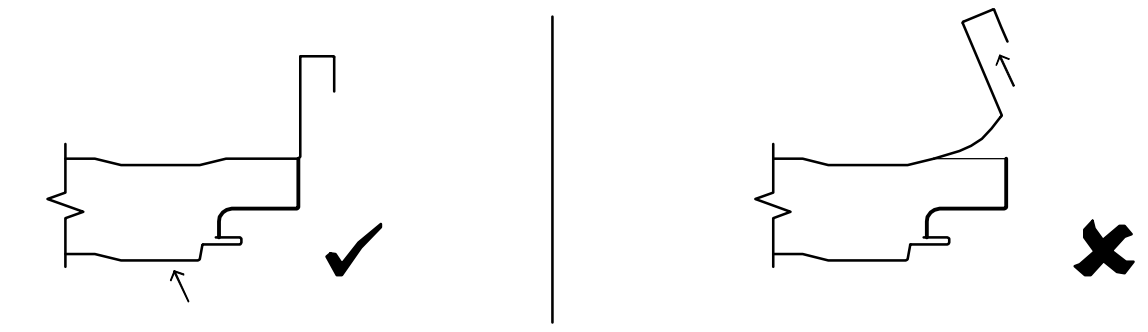

THE METAL BUILDING/PANEL SUPPLIER DOES NOT TAKE ANY RESPONSIBILITY FOR DAMAGE CAUSED FROM MISHANDLING OF PANELS. DAMAGED PANELS SHALL BE REPLACED OR CORRECTED TO APPROVAL OF THE ARCHITECT AND ANY COST INCURRED SHALL BE BORNE BY THE PARTIES RESPONSIBLE FOR THE DAMAGE.

JOBSITE STORAGE:

UPON ACCEPTANCE OF THE SHIPMENT, THE CUSTOMER IS RESPONSIBLE FOR PROPER HANDLING, STORAGE, AND SECURITY OF THE RECEIVED MATERIALS. THE MANUFACTURER IS NOT RESPONSIBLE FOR DAMAGE OR LOSS OF MATERIALS AT THE JOB SITE.

PANELS NOT REQUIRED FOR IMMEDIATE USE SHOULD BE:
- CAREFULLY UNLOAD AND PLACE DIRECTLY IN A PROTECTED STORAGE AREA ON A FIRM, LEVEL SURFACE CLEAR OF DEBRIS, PREFERABLY UNDER WATER PROOF COVER AND SLIT PLASTIC WRAP AT BASE TO ALLOW AIR FLOW, FOR NO LONGER THAN 30 DAYS.
- CUT / SLIT THE BOTTOM OF THE PLASTIC WRAP IN 1'-0" INCREMENTS AT 5'-0" O.C. ALONG THE LENGTH OF THE BUNDLES. A CONTINUOUS CUT / SLIT SHOULD BE MADE ALONG THE WIDTH OF THE BUNDLE.
- ELEVATE WITH WOOD BLOCKING, TO ALLOW AIR CIRCULATION UNDER THE BUNDLE, ON A FIRM, LEVEL SURFACE CLEAR OF DEBRIS, STANDING WATER, DIRECT SUN, AND DRIFTING SNOW.
- SEPARATE FLAT-LAID BUNDLES WITH THE STYRENE DUNNAGE PROVIDED WITH THE SHIPMENT.
- BUNDLES CAN BE STACKED, NO MORE THAN (2) BUNDLES HIGH.
- SLOPE AT A MINIMUM OF **1:12** FOR DRAINAGE OF MOISTURE FROM PANELS.
- INSPECTED DAILY FOR MOISTURE, INSURE NO SAGS ARE PRESENT. TRAPPED MOISTURE CAN DAMAGE THE PANEL FINISH AND VOID APPLICABLE FINISH WARRANTIES. IF PANEL BUNDLES CONTAIN MOISTURE OR SAGS, THE PANEL BUNDLE SHOULD BE DRIED AND RESTACKED. USE CARE IN RESTACKING TO AVOID DAMAGE TO PANELS.

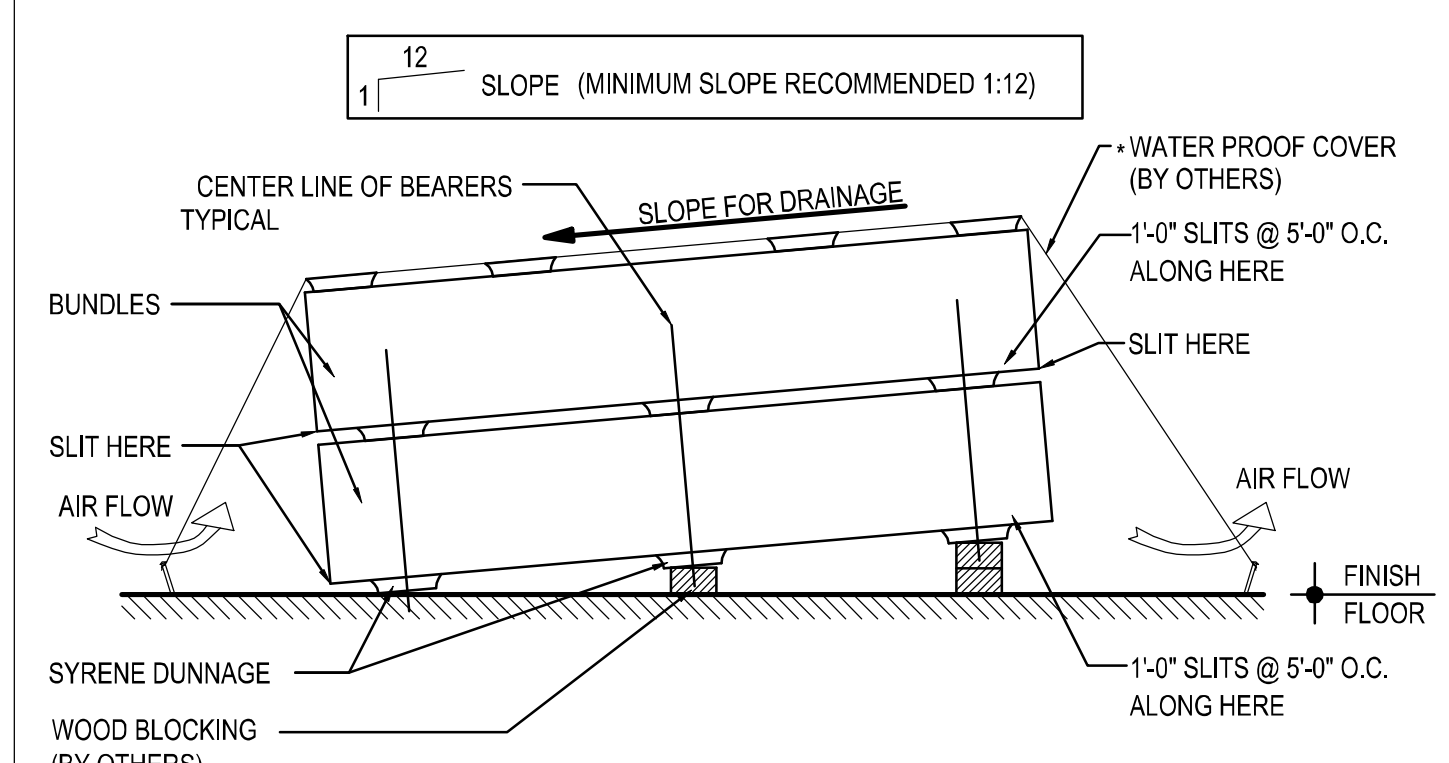

PANELS FOR IMMEDIATE USE:
IF THE PANELS ARE TO BE USED IMMEDIATELY, THE BUNDLES SHOULD BE PLACED AT PRE-PLANNED STRATEGIC LOCATIONS AROUND THE PERIMETER OF THE BUILDING, AS CLOSE AS POSSIBLE TO THE PLANNED WORK AREAS, TO AVOID UNDUE SITE MANEUVERING.

WHEN MOVING PANEL BUNDLES, EXTREME CAUTION SHOULD BE TAKEN TO PREVENT DAMAGE TO THE PANEL SURFACES AND EDGES.

WHEN HANDLING PANELS INDIVIDUALLY, THEY SHOULD BE CARRIED IN A VERTICAL, NOT FLAT POSITION. NEVER DRAG PANELS WHEN REMOVING THEM FROM BUNDLES.

(SEE "HANDLING PANELS AND COMPONENTS)

INSTALLATION TOOLS:

"READ BEFORE YOU START"

- SLIDING PANELS TOGETHER WILL SCUFF, DISCOLOR OR DAMAGE THE FINISH.
- IT IS IMPORTANT TO NOTE THAT, DUE TO THE HIDDEN FASTENER SIDE LAP CONNECTIONS OF THESE PANELS, EXTRA CARE SHOULD BE TAKEN WHEN HANDLING THESE COMPONENTS.
- THE FOLLOWING IS A LIST OF COMMON TOOL REQUIREMENTS. REFER TO "FIELD CUTTING" FOR PANEL CUTTING GUIDELINES.
- WEARING CLEAN GLOVES, HANDLING THE PANELS BY EDGES AND TAKING A LITTLE EXTRA CARE WILL PAY OFF BY PRODUCING A GOOD CLEAN FINISHED ROOF.

COMMON TOOL REQUIREMENTS:

CIRCULAR SAW	POWER DRILL	CARPENTER'S SQUARE
RIVET GUN	LEVEL	CHALK LINE
TAPE MEASURE	CAULK GUN	SCREW GUN
POWER SHEARS	HAMMER DRILL	POWER NIBBLER

CAUTION: ANY METAL FILINGS OR BURRS SHOULD BE CLEANED OFF THE FACE OF THE PANELS AS SOON AS POSSIBLE TO PREVENT RUST FROM FORMING ON THE PAINT. (SEE "CLEANING PROCEDURES")

ALIGNMENT & SHIMMING
PRIOR TO INSTALLATION, ROOF SECONDARY MEMBERS SHOULD BE CHECKED FOR OVERALL DIMENSIONS AND EVENNESS OF PLANE. THE ROOF SECONDARY MEMBERS SHOULD ALSO BE CHECKED TO VERIFY THE ROOF SYSTEM CAN BE INSTALLED WITHOUT INTERFERENCE. PRIOR TO INSTALLATION OF INSULATED PANEL, INSPECT ROOF FOR COMPONENT ALIGNMENT AND PLANE FLATNESS.

MISALIGNED SECONDARY STEEL MAY REQUIRE THE ERECTOR TO SHIM THE INSULATED ROOF PANELS AT SOME LOCATIONS. SHIMS AND LABOR FOR INSTALLING SHIMS ARE BY OTHERS.

FASTENERS:

INSULATED PANEL FASTENERS VARY BASED ON LOCATION AND PANEL THICKNESS. THE FASTENERS LISTED BELOW ARE TYPICAL FASTENERS. ADDITIONAL FASTENERS, WHEN REQUIRED BY DESIGN, WILL BE INDICATED ELSE WHERE ON THE ERECTION DRAWING SET.

43L — SELF-DRILLING SCREW 1/4-14 x 1 1/4" TYPE 2

H1030 — SELF-DRILLING SCREW 1/4-14 x 1 1/4" TCP 3 W/ WASHER

H1050 — SELF-DRILLING SCREW 1/4-14 x 7/8" TCP 1 W/ WASHER

H1100 — 1/8" STAINLESS STEEL BLIND POP RIVET GRIP RANGE: 1/8" - 3/16"

17 — SELF-DRILLING SCREW 12-14 x 1" TCP 3 W/ WASHER

4 — SELF-DRILLING SCREW 1/4-14 x 7/8" TCP 1 W/ WASHER

14 — 1/8" STAINLESS STEEL BLIND POP RIVET GRIP RANGE: 1/8" - 3/16"

H1220 — SELF-DRILLING SCREW 12-14 x 1" TCP 3 SQUARE / PHILLIPS PANCAKE HEAD

2605ANC — LOCK RIVET, 9/32 BT DOME HEAD W/ WASHER

14A — 1/8" STAINLESS STEEL BLIND POP RIVET GRIP RANGE: 5/16" - 3/8"

16__PNC / 17__PNC
#14 X _ SDHH (SELF DRILLING HEX HEAD)

STRUCTURAL FASTENING AT PANEL HIDDEN JOINT

PANEL THICK.	HIDDEN FASTENER	(TEK 3) MARK#:	(TEK 5) MARK #:
2"	1/4 - 14 X 2 SDHH W/O WASHER	1616PNC	N/A
2 1/2" & 3"	1/4 - 14 X 3 SDHH W/O WASHER	1624PNC	1724PNC
4"	1/4 - 14 X 4 SDHH W/O WASHER	1632PNC	1732PNC

14__PNC
#14 X _ SDPH SELF DRILLING PANCAKE HEAD

STRUCTURAL FASTENER AT PANEL FACE

PANEL THICK.	THROUGH FASTENER	(TEK 3) MARK#:
2"	#14 X 3 SDPH	1424PNC
2 1/2" & 3"	#14 X 4 SDPH	1432PNC
4"	#14 X 5 SDPH	1440PNC

11__P999
#14 X _ SDHH (SELF DRILLING HEX HEAD)

STRUCTURAL FASTENING FOR THROUGH CONDITIONS

PANEL THICK.	THROUGH FASTENER	(TEK 3) MARK#:
2"	1/4 - 14 X 4 SDHH W/ WASHER	1132P999
2 1/2" & 3"	1/4 - 14 X 5 SDHH W/ WASHER	1140P999
4"	1/4 - 14 X 6 SDHH W/ WASHER	1148P999
5"	1/4 - 14 X 7 SDHH W/ WASHER	1156P999
6"	1/4 - 14 X 8 SDHH W/ WASHER	1164P999

41__GNC
METL-SPAN ROOF PANEL CLIP

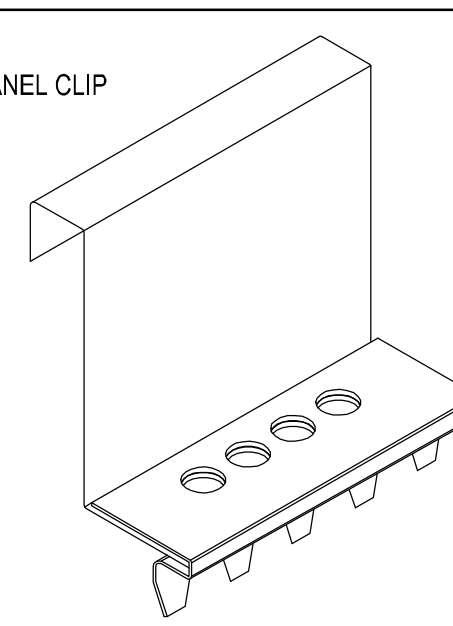

METL-SPAN ROOF PANEL CLIPS

PANEL THICK.	METL-SPAN ROOF PANEL CLIP MK# 41__GNC
2"	4102GNC
2 1/2"	4125GNC
3"	4103GNC
4"	4104GNC
5"	4105GNC
6"	4106GNC

NOTES: THE USE OF A CENTER PUNCH TO SLIGHTLY DIMPLE THE PANEL FACE PRIOR TO INSTALLING THROUGH FASTENERS IS RECOMMENDED TO PREVENT "WALKING" OF THE FASTENERS. EXCESSIVE DAMAGE TO THE PANEL FINISH CAUSED DURING INSTALLATION MAY VOID THE PANEL FINISH WARRANTY.

PROJECT PREPERATION NOTES

INSULATED ROOF PANELS
INITIAL GUIDLINES, UNLOADING, HANDLING PANELS & COMPONENTS, JOBSITE STORAGE, & REQ'D TOOLING FOR INSTALLATION

TRIM_1

ISSUE	DWN	CHK	ENG	PE	DATE
CONST. AB PLAN	NBS	EOP	CBM		7/24/2023
BUILDING DEPARTMENT REVIEW	MBS	DAN	CBM		7/31/2023

NUCOR BUILDING SYSTEMS
305 INDUSTRIAL PARKWAY, WATERLOO, IN 46793
PHONE: (260) 837-7891 FAX: (260) 837-7384
PO BOX 1006, 200 WHETSTONE RD, SWANSEA, SC 29160
PHONE: (803) 568-2100 FAX: (803) 568-2121
600 APACHE TRAIL, TERRELL, TX 75160
PHONE: (972) 524-5407 FAX: (972) 524-5417
1050 WATERY LANE, BRIGHAM CITY, UT 84302
PHONE: (435) 919-3100 FAX: (435) 919-3101

PROJECT NAME
WENDOVER FS #13 REPLACEMENT
WENDOVER, NV

CUSTOMER NAME
MICHAEL CLAY CORP
WINNEMUCCA, NV

JOB NUMBER
U23G0555A

SHEET TITLE

PROFESSIONAL ENGINEER - STATE OF NEVADA
RUSSELL R. SKEEM
07/31/2023
Exp. Jun 30, 2024
CIVIL/STRUCTURAL
No. 016713

This seal pertains only to the materials designed and supplied by Nucor Building Systems, a division of Nucor Corporation. The drawings and the metal buildings which they represent are the product of Nucor Building Systems. The register professional engineer whose seal appears on these drawings is employed by Nucor Buildings Systems and does not serve as or represent the project engineer of record and shall not be construed as such.

SHEET
D5 of 20

PANEL JOINT SEQUENCE

1. SET PANEL IN PLACE
2. INSTALL PANEL CLIP ON TOP OF 6" OF 1/2" TAPE MASTIC MK. H3010
3. SECURE TO PURLINS W/ ROOF CLIP FASTENERS MK. 1616PNC

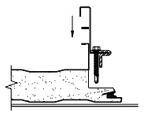

4. HAND "CRIMP" THE STANDING RIB / CLIP ASSEMBLY AT EACH CLIP LOCATION
5. INSTALL CONTINUOUS TAPE MASTIC MK. H3010 ON TOP OF MALE STANDING SEAM

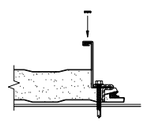

6. TILT NEXT PANEL TO BE INSTALLED AT 45 DEGREE ANGLE, ROTATE INTO POSITION

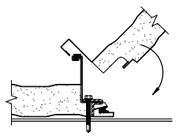

7. USE CLAMPS TO ENSURE PROPER PANEL ENGAGEMENT
8. HAND CRIMP AT RIDGE, ENDLAP AND EAVES
9. INSTALL RIDGE, RAKE AND EAVE COMPONENTS, THEN MECHANICALLY SEAM ROOF

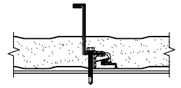

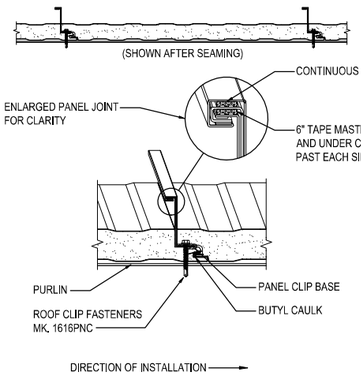

FINISHED PANEL JOINT

PANEL JOINT
INSULATED METAL PANEL ROOF INSTALLATION SEQUENCE

TRIM_2

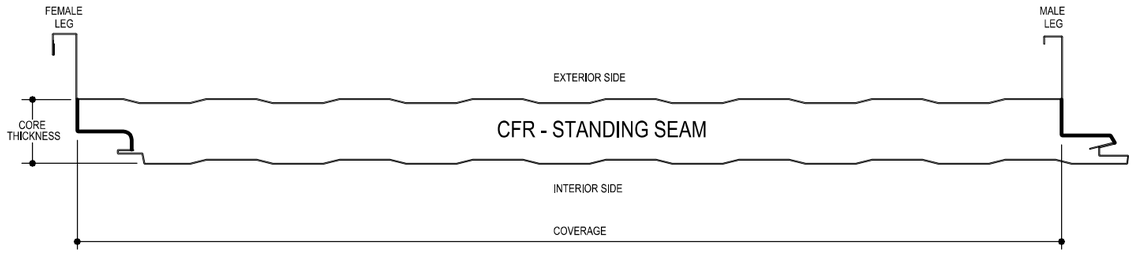

PANEL TYPE	CFR - STANDING SEAM
CORE MATERIAL	POLYURETHANE
CORE THICKNESS	4"
COVERAGE	42"

	EXTERIOR FACE	INTERIOR FACE
GAUGE	24	26
MATERIAL	G-90 GALV. or AZ50 STEEL	G-90 GALV. or AZ50 STEEL
FINISH	PVDF	POLYESTER
COLOR	TERRA COTTA	IGLOO WHITE
PATTERN	EMBOSSED	DEEP EMBOSSED

TRIM_3

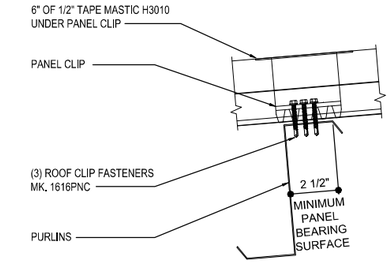

CLIP FASTENER QUANTITY
INSULATED METAL PANEL ROOF CLIP ATTACHMENT

TRIM_4

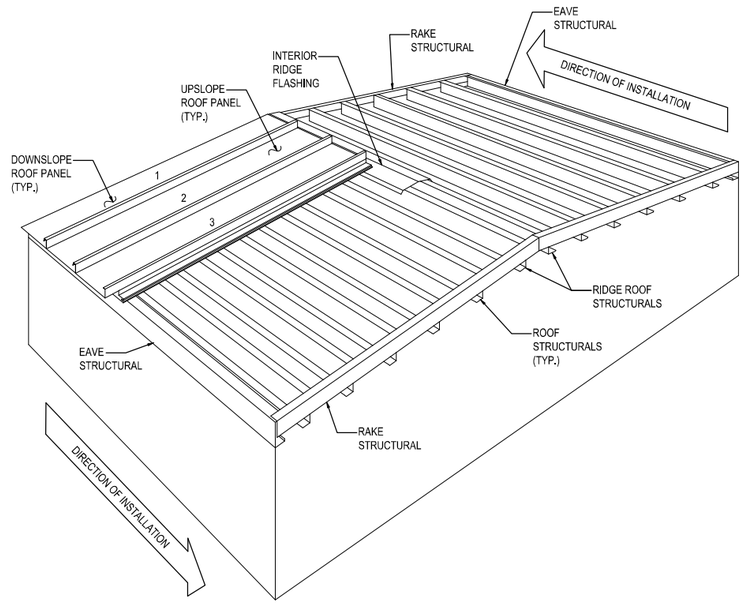

ROOF PANEL LAYOUT
ROOF PANEL LAYOUT WITH NO ENDLAP

TRIM_5

ISSUE	DWN	CHK	ENG	PE	DATE
CONST. AB PLAN	NBS	EOP	CBM		7/24/2023
BUILDING DEPARTMENT REVIEW	WBS	DAN	CBM		7/31/2023

NUCOR BUILDING SYSTEMS
300 INDUSTRIAL PARKWAY, WATERLOO, IN 46793
PHONE: (260) 837-7891 FAX: (260) 837-7384
PO BOX 1006, 200 WHETSTONE RD, SWANSEA, SC 29160
PHONE: (803) 568-2100 FAX: (803) 568-2121
600 APACHE TRAIL, TERRELL, TX 75160
PHONE: (972) 524-4700 FAX: (972) 524-4717
1050 WATER LANE, BRIGHAM CITY, UT 84302
PHONE: (435) 919-3100 FAX: (435) 919-3101

PROJECT NAME: WENDOVER FS #13 REPLACEMENT
WENDOVER, NV

CUSTOMER NAME: MICHAEL CLAY CORP
WINNEMUCCA, NV

JOB NUMBER: U23G0555A

SHEET TITLE

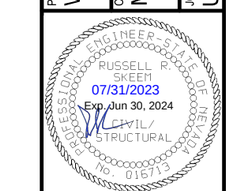

This set of plans and/or specifications is the property of Nucor Building Systems, a division of Nucor Corporation. The drawings and the information shown thereon are not to be used in any manner by any person or entity that is not the owner of the building for which they were prepared by Nucor Building Systems, unless such use is authorized by Nucor Building Systems and does not serve as a substitute for any permit or approval of record and shall not be construed as such.

SHEET

D6 of 20

GUTTER LAP & END CAP

APPLY BEAD OF POLYURETHANE CAULK 1" FROM END OF TRIM AND LAP SECTIONS 2" AND FASTEN AS SHOWN. TO TERMINATE THE GUTTER APPLY POLYURETHANE CAULK TO THREE SIDES OF END CAP AND TOP RETURN AREA AS SHOWN AND INSERT INTO THE GUTTER LEAVING 1/2" EXPOSED. ATTACH WITH RIVETS SAME AS END LAP.

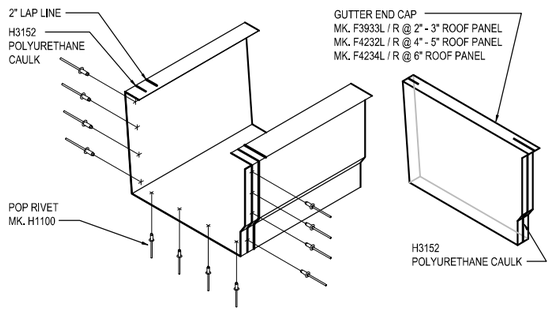

ERECTOR NOTE:
PART MARKS MAY CONTAIN A "- NUMBER" INDICATING ROOF SLOPE

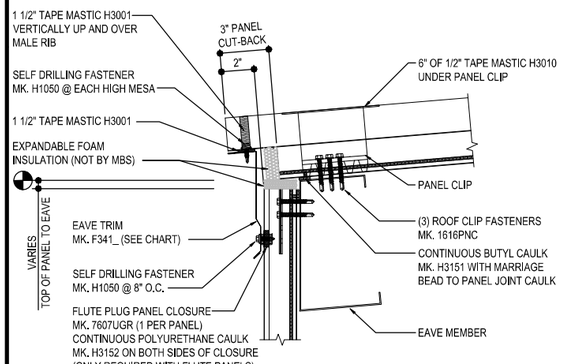

ROOF PANEL THICKNESS	EAVE TRIM
2" / 2.5" / 3"	F3415
4" / 5"	F3416
6"	F3417

EAVE GUTTER DETAIL

INSULATED METAL PANEL ROOF WITH GUTTER

TRIM_6

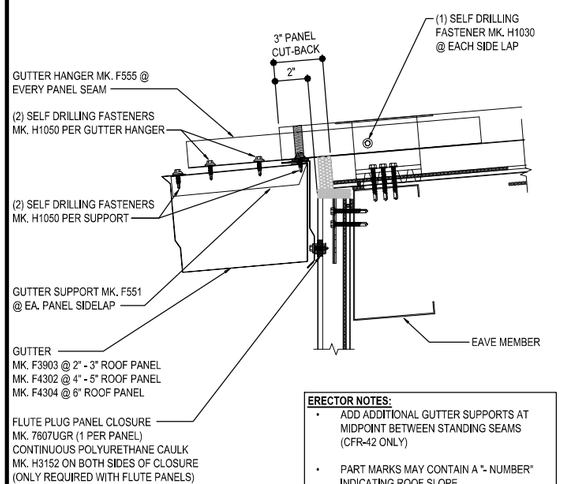

ERECTOR NOTES:
- ADD ADDITIONAL GUTTER SUPPORTS AT MIDPOINT BETWEEN STANDING SEAMS (CFR-42 ONLY)
- PART MARKS MAY CONTAIN A "- NUMBER" INDICATING ROOF SLOPE

STEP 1

PREPARATION FOR RAKE TRIM INSTALLATION AT BUILDING WITH GUTTER

RAKE CLOSURE ATTACHMENT WITH GUTTER
ATTACH RAKE TRIM CLOSURE **F3444** AT A HIGH RIB OR LOW RIB FOR PROPER SEAL. EXTEND RAKE CLOSURE DOWNSLOPE FOR ATTACHMENT TO GUTTER.

WHEN BEGINNING GUTTER AND EAVE TRIM INSTALL LOCATE CORRECT POSITION OF **F341_** TRIM AND CLAMP / HOLD IN PLACE AND FASTEN TO WALL PANEL WITH FASTENER **MK. H1050.** DO NOT FASTEN TO ROOF PANEL AT THIS TIME.

FIELD COPE EAVE TRIM
EAVE TRIM **MK. F341_** HELD LEVEL TO FACE OF PANEL AND EXTENDED OUT PAST CORNER AND FIELD COPED AROUND CORNER ALLOWING FASTENING WITH **POP RIVETS MK. (H1100)** FIELD WORK REQURED FOR WEATHER TIGHTNESS.

GUTTER INSTALLATION WITH GUTTER CAP AND RAKE TRIM

MARK LOCATION OF RAKE CLOSURE **(F3444)** ON GUTTER FOR PLACEMENT OF GUTTER END CAP. THE GUTTER WILL EXTEND OUT TO BE FLUSH WITH WALL PANEL.

APPLY BEAD OF POLYURETHANE CAULK **(H3152)** TO THE GUTTER END CAP AND INSERT INTO THE END OF THE GUTTER. ENSURE THE GUTTER CAP IS IN-LINE WITH YOUR MARK FOR THE **F3444** RAKE CLOSURE AND FASTEN AS SHOWN.

FASTEN GUTTER ONTO LOW EAVE BY FOLLOW FASTENER QUANTITY AND LOCATION PER EAVE GUTTER DETAIL.

ERECTOR NOTE:
PART MARKS MAY CONTAIN A "- NUMBER" INDICATING ROOF SLOPE

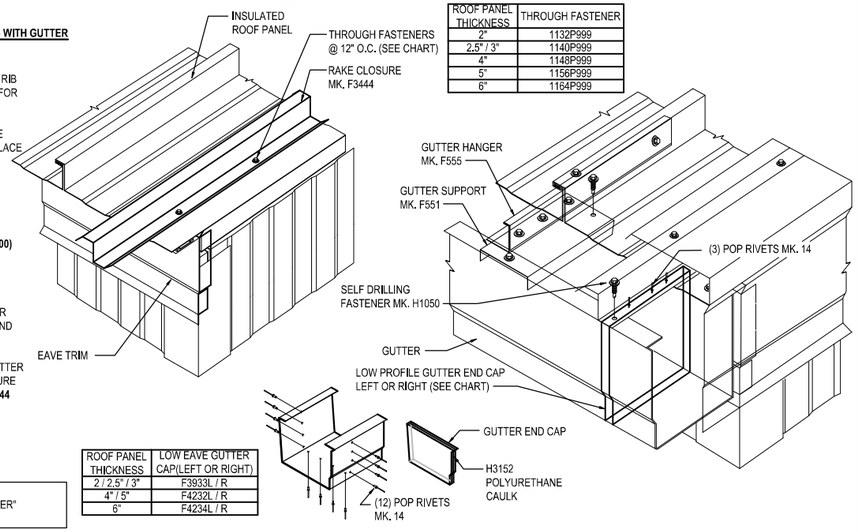

ROOF PANEL THICKNESS	THROUGH FASTENER
2"	1132P999
2.5" / 3"	1140P999
4"	1148P999
5"	1156P999
6"	1164P999

ROOF PANEL THICKNESS	LOW EAVE GUTTER CAP(LEFT OR RIGHT)
2 / 2.5" / 3"	F3933L / R
4" / 5"	F4232L / R
6"	F4234L / R

STEP 2

GUTTER CORNER CAP AND RAKE TRIM INSTALLATION

FASTEN THE RAKE TRIM TO THE ROOF PANEL AS INDICATED IN THE RAKE TRIM DETAIL.

FASTEN THE RAKE TRIM TO THE LOW EAVE CORNER ASSEMBLY USING POP RIVETS **MK. H1100** AS SHOWN.

COPE THE BOTTOM VERTICAL LEG OF THE RAKE TRIM FLUSH WITH THE OUTSIDE EDGE OF THE WALL CORNER TRIM.

ALWAYS START THE RAKE TRIM INSTALLATION AT THE LOW EAVE WORKING TOWARD THE HIGH EAVE OR RIDGE.

WALL PANEL THICKNESS	ROOF PANEL THICKNESS	RAKE TRIM
2" / 2.5" / 3"	2" / 2.5" / 3"	F3430
2" / 2.5" / 3"	4" / 5"	F3431
2" / 2.5" / 3"	6"	F3432
4"	2" / 2.5" / 3"	F3433
4"	4" / 5"	F3434
4"	6"	F3435

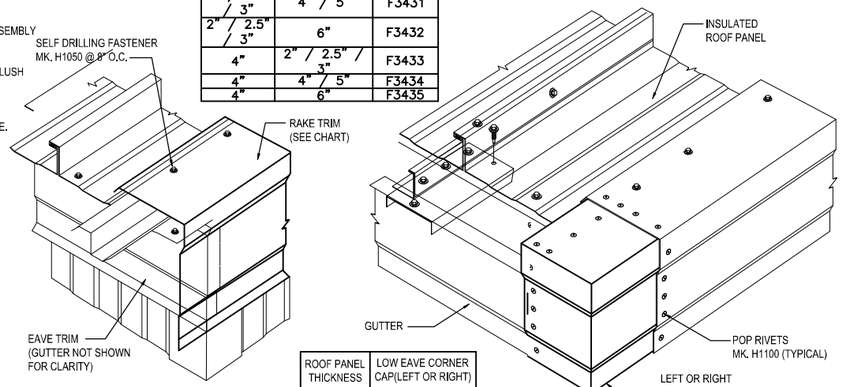

ROOF PANEL THICKNESS	LOW EAVE CORNER CAP(LEFT OR RIGHT)
2 / 2.5" / 3"	F5204L / R
4" / 5"	F5205L / R
6"	F5203L / R

SCULPTURED RAKE TO GUTTER

TRIM_7

RAKE LAP & FLASHING BACKER

SLIDE FIELD CUT SECTION FLASHING ENDLAP BACKER ONTO THE LOWER TRIM PIECE. PLACE TAPE MASTIC NEXT TO HEM OF THE BACKER (NOT ON TOP OF HEM). APPLY CONTINUOUS BEAD OF CAULK 1" FROM END OF TRIM DOWN PROFILE OF TRIM. FASTEN LAP WITH STITCH FASTENERS AND POP RIVETS AS SHOWN.

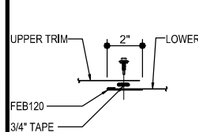

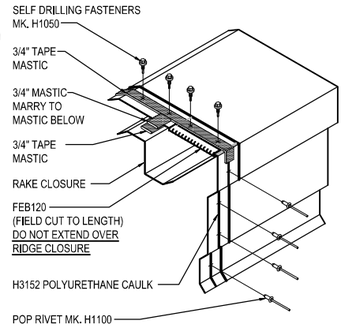

ROOF PANEL THICKNESS	THROUGH FASTENER
2"	1132P999
2.5" / 3"	1140P999
4"	1148P999
5"	1156P999
6"	1164P999

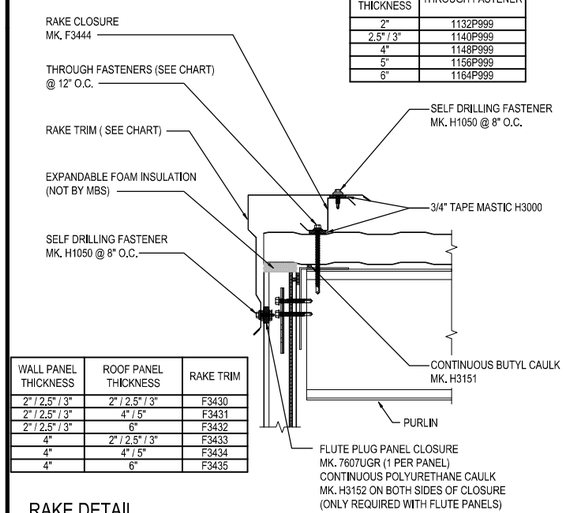

WALL PANEL THICKNESS	ROOF PANEL THICKNESS	RAKE TRIM
2" / 2.5" / 3"	2" / 2.5" / 3"	F3430
2" / 2.5" / 3"	4" / 5"	F3431
2" / 2.5" / 3"	6"	F3432
4"	2" / 2.5" / 3"	F3433
4"	4" / 5"	F3434
4"	6"	F3435

RAKE DETAIL

INSULATED METAL PANEL ROOF AT RAKE

TRIM_8

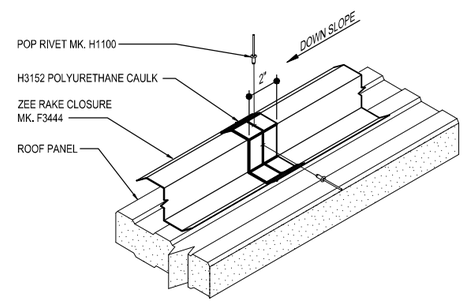

ZEE RAKE CLOSURE LAP DETAIL

TRIM_9

ISSUE	DWN	CHK	ENG	PE	DATE
CONST. AB PLAN	NBS	EOP	CBM		7/24/2023
BUILDING DEPARTMENT REVIEW	MBS	DAN	CBM		7/31/2023

NUCOR BUILDING SYSTEMS
300 INDUSTRIAL PARKWAY, WATERLOO, IN 46793
PHONE: (260) 837-7891 FAX: (260) 837-7384
PO BOX 1006, 200 WHETSTONE RD, SWANSEA, SC 29160
PHONE: (803) 568-2100 FAX: (803) 568-2121
600 APACHE TRAIL, TERRELL, TX 75160
PHONE: (972) 524-4500 FAX: (972) 524-4517
1050 WATER LANE, BRIGHAM CITY, UT 84302
PHONE: (435) 919-3100 FAX: (435) 919-3101

PROJECT NAME: WENDOVER FS #13 REPLACEMENT
WENDOVER, NV
CUSTOMER NAME: MICHAEL CLAY CORP
WINNEMUCCA, NV
JOB NUMBER: U23G0555A
SHEET TITLE

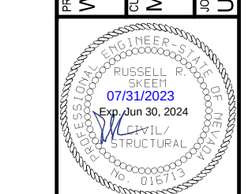

This set of plans and/or specifications is the property of Nucor Building Systems, a division of Nucor Corporation. The drawings and the information shown on the drawings are the property of Nucor Building Systems. The register professional engineer who has placed his seal on these drawings is employed by Nucor Buildings Systems and does not serve as an employee of those to whom the record and shall not be construed as such.

SHEET: D7 of 20

PRIOR TO INSTALLING THE INTERIOR RIDGE TRIM,
APPLY 3/8" BEAD OF BUTYL CAULK MK. H3151 ONTO RAKE ROOF ANGLE MK. MAR01

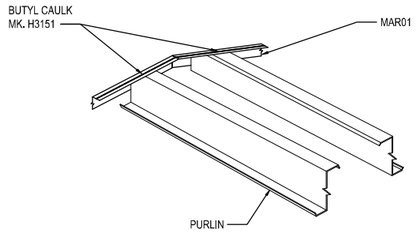

APPLY 3/8" CONTINUOUS BEAD OF BUTYL CAULK ALONG THE LENGTH OF THE INTERIOR RIDGE TRIM. MARRY TO THE BUTYL ALONG THE RAKE.

INSTALL INTERIOR RIDGE TRIM WITH POP RIVETS MK. 14 AS NEEDED INTO SECONDARY MEMBERS.

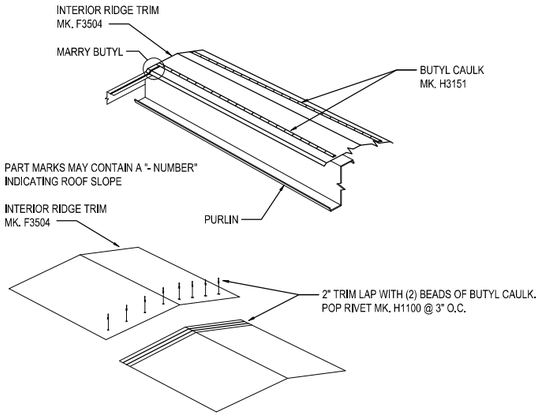

ONCE PANELS ARE INSTALLED, CRIMP PANEL SEAMS TO PREP FOR MASTIC AND RIDGE CLOSURE INSTALLATION.

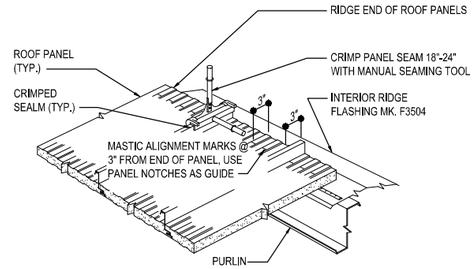

INSTALL MASTICS
ENSURE 1 1/2" MASTIC H3001 ENCOMPASSES THE ENTIRE PROFILE OF EACH VERTICAL RIB

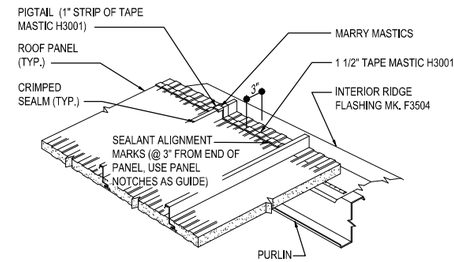

RIDGE CLOSURE INSTALLATION

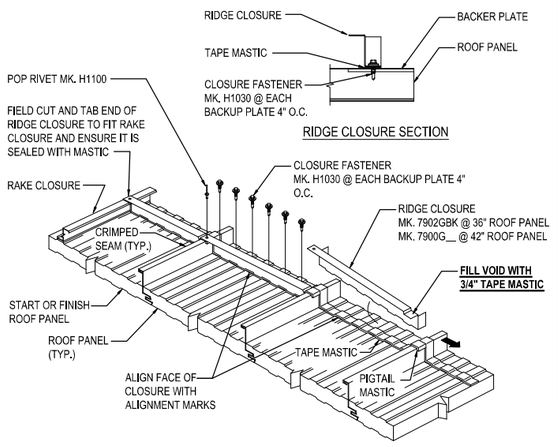

EXTERIOR RIDGE FLASHING INSTALLATION
INSTALL 3/4" TAPE MASTIC H3000 ON TOP LEG OF CLOSURE PRIOR TO EXTERIOR RIDGE FLASHING BEING INSTALLED

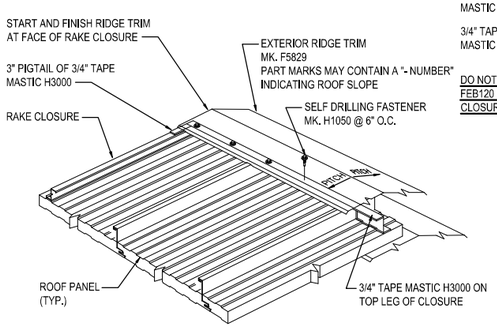

RIDGE CAP LAP & FLASHING BACKER

SLIDE FIELD CUT SECTION FLASHING ENDLAP BACKER ONTO THE LOWER TRIM PIECE. PLACE TAPE MASTIC NEXT TO HEM OF THE BACKER (NOT ON TOP OF HEM). MARRY LAP MASTIC WITH MASTIC BETWEEN RIDGE CAP AND PANEL CLOSURE.

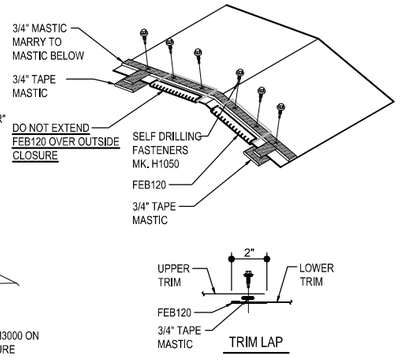

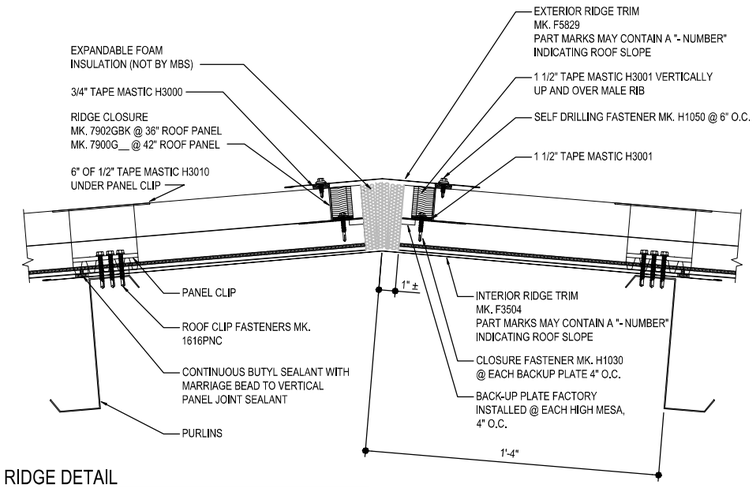

RIDGE DETAIL
INSULATED METAL PANEL ROOF AT RIDGE

TRIM_10

ISSUE	DWN	CHK	ENG	PE	DATE
CONST. AB PLAN	NBS	EOP	CBM		7/24/2023
BUILDING DEPARTMENT REVIEW	MBS	DAN	CBM		7/31/2023

NUCOR BUILDING SYSTEMS
300 INDUSTRIAL PARKWAY, WATERLOO, IN 46793
PHONE: (260) 837-7891 FAX: (260) 837-7384
PO BOX 1006, 200 WHETSTONE RD, SWANSEA, SC 29160
PHONE: (803) 568-2100 FAX: (803) 568-2121
600 APACHE TRAIL, TERRELL, TX 75160
PHONE: (972) 524-4417 FAX: (972) 524-4447
1050 WATER LANE, BRIGHAM CITY, UT 84302
PHONE: (435) 919-3100 FAX: (435) 919-3101

PROJECT NAME
WENDOVER FS #13 REPLACEMENT
WENDOVER, NV

CUSTOMER NAME
MICHAEL CLAY CORP
WINNEMUCCA, NV

JOB NUMBER
U23G0555A

SHEET TITLE

RUSSELL R. SKEEN
07/31/2023
Exp. Jun 30, 2024
CIVIL/STRUCTURAL

This set contains only to the materials designed by Nucor Building Systems, a division of Nucor Corporation. The drawings and the information shown thereon are the property of Nucor Building Systems and are not to be used in any form on any other project without the written authorization of Nucor Building Systems. Any use of these drawings is employed by Nucor Buildings Systems and does not serve as a certification unless signed and stamped as such.

SHEET

D8 of 20

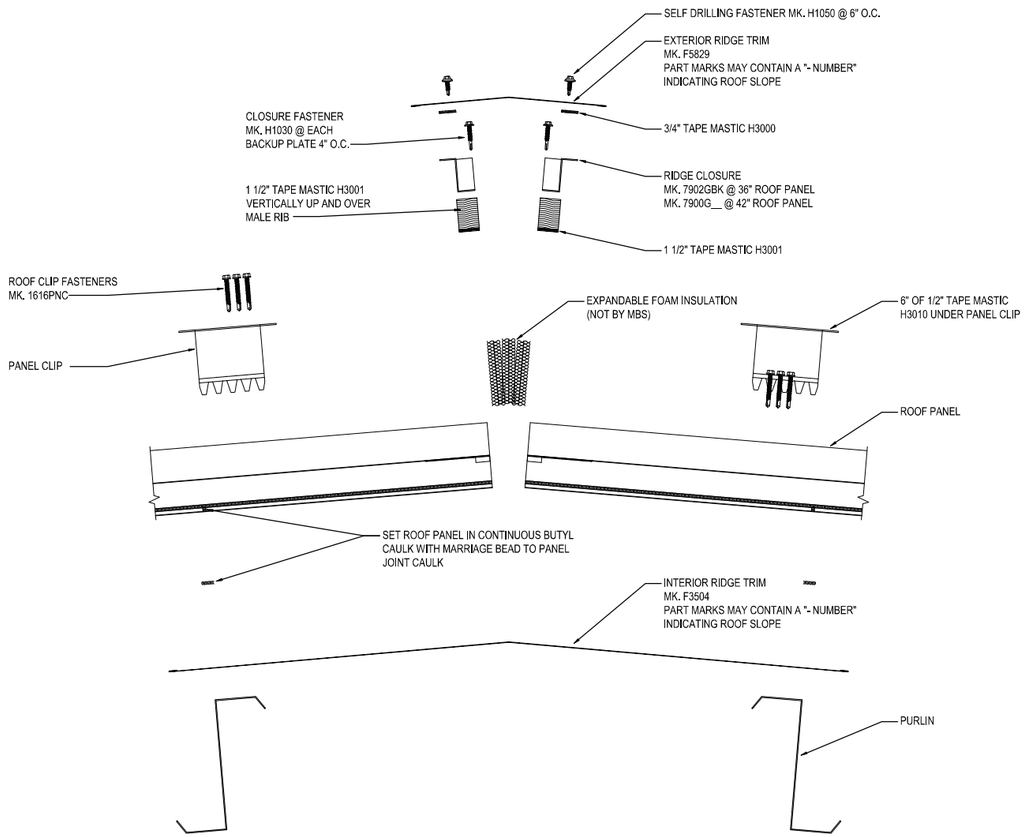

RIDGE DETAIL

EXPLODED INSULATED METAL PANEL ROOF AT RIDGE

TRIM_11

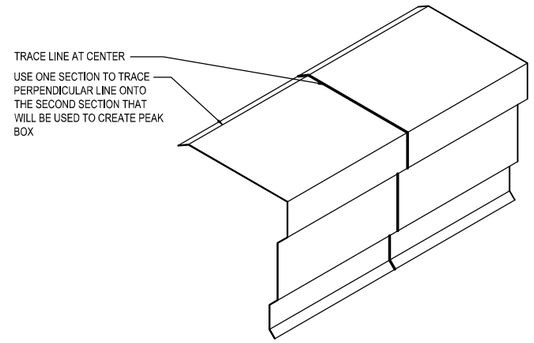

ROOF SLOPE	LAYOUT DIMENSION (INCHES			
	A	B	C	D
0.25:12	1/8"	1/4"	3/8"	11 7/8"
0.50:12	1/4"	1/2"	3/4"	11 5/8"
1:12	3/8"	1"	1 1/2"	11 3/8"
2:12	3/4"	2 1/8"	2 7/8"	10 5/8"
3:12	1 1/8"	3 1/8"	4 1/4"	9 7/8"
4:12	1 1/2"	4 1/8"	5 3/4"	9 1/4"
5:12	1 3/4"	5 1/8"	7 1/8"	8 1/2"
6:12	2 1/8"	6 1/8"	8 1/2"	7 3/4"

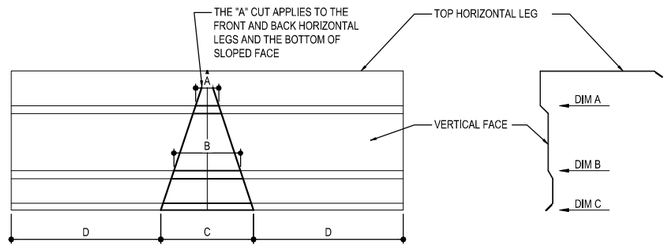

STEP BY STEP INSTRUCTIONS

1. CUT THE TRIM INTO (2) 2'-0" ± LENGTHS
2. LAYOUT THE WORK LINES AS SHOWN
3. OFFSET ONE OF THE WORK LINES FOR TABS LAYOUT
4. MAKE CUTS AS SHOWN
5. BEND AT THE TOP HORIZONTAL LEG OF THE TRIM
6. POP RIVET THE TWO SIDES TOGETHER WITH **MK. H1100**
7. CAULK ANY GAPS AS REQUIRED ON INSIDE WITH **H3152 POLYURETHANE TUBE CAULK**

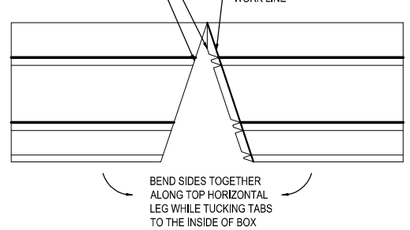

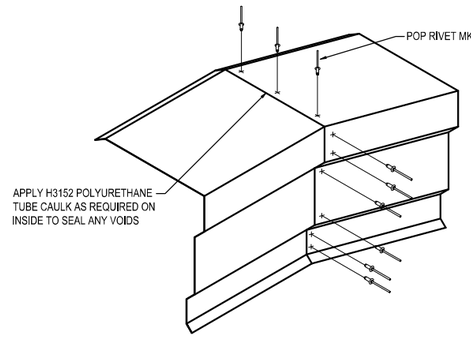

FIELD FABRICATED PEAK BOX INSTRUCTIONS

REFERENCE PEAK BOX DETAIL FOR INSTALLATION

TRIM_12

ISSUE	DWN	CHK	ENG	PE	DATE
CONST. AB PLAN	NBS	EOP	CBM		7/24/2023
BUILDING DEPARTMENT REVIEW	MBS	DAN	CBM		7/31/2023

NUCOR BUILDING SYSTEMS
300 INDUSTRIAL PARKWAY, WATERLOO, IN 46793
PHONE: (260) 837-7891 FAX: (260) 837-7384
PO BOX 1006, 200 WHETSTONE RD, SWANSEA, SC 29160
PHONE: (803) 568-2100 FAX: (803) 568-2121
600 APACHE TRAIL, TERRELL, TX 75160
PHONE: (972) 524-2000 FAX: (972) 524-2417
1050 WATERY LANE, BRIGHAM CITY, UT 84302
PHONE: (435) 919-3100 FAX: (435) 919-3101

PROJECT NAME
WENDOVER FS #13 REPLACEMENT
WENDOVER, NV

CUSTOMER NAME
MICHAEL CLAY CORP
WINNEMUCCA, NV

JOB NUMBER
U23G0555A

SHEET TITLE

RUSSELL R. SKEEN
07/31/2023
Exp. Jun 30, 2024
CIVIL/STRUCTURAL

This sealed plans only to the materials described herein as furnished by Nucor Building Systems, a division of Nucor Corporation. The drawings and the information shown thereon represent are the product of Nucor Building Systems's registered professional engineer and should not be used on those drawings is employed by Nucor Buildings Systems and does not serve as a record and shall not be construed as such.

SHEET

D9 of 20

DESIGN AND PERFORMANCE CRITERIA

ROOF SYSTEM
THE ROOF SYSTEM CONSISTS OF 24 GAUGE PANELS WITH A NOMINAL COVERAGE OF 1'-4" AND A PANEL SEAM THAT IS 2 1/2" OR 3 1/2" HIGH DEPENDING ON CLIP TYPE USED. REFER TO THE DETAILS AND SECTIONS FOR SPECIFIC PANEL CLIP TYPE.

PANEL CLIP SPACING
THE ROOF SYSTEM USES A CLIP TO ATTACH THE PANELS TO THE ROOF SECONDARY MEMBERS. PANEL CLIP SPACING REQUIREMENTS AS A STANDARD ARE REQUIRED AT EVERY PURLIN AND/OR ROOF JOIST.

PANEL CLIP FASTENING REQUIREMENTS
STANDARD CLIP FASTENERS ARE DESIGNED TO FASTEN TO A STEEL STRUCTURAL MEMBER OF .060" MINIMUM THICKNESS (16 GA.). A MINIMUM OF TWO FASTENERS ARE REQUIRED TO ENGAGE THE STRUCTURAL MEMBER AT EVERY PANEL CLIP LOCATION. IN CERTAIN INSTANCES, THREE FASTENERS MAY BE REQUIRED PER CLIP REQUIRED. LOOK ON CHART AT RIGHT AND IN THE ERECTION DRAWINGS FOR YOUR SPECIFIC FASTENER REQUIREMENTS. FASTENER PULLOUT VALUES ARE DEPENDENT UPON PROJECT LOCATION, SIZE, BUILDING CODE AND LOADING.

ROOF TOP UNITS AND CURB SUPPORTS
THE ROOF SYSTEM IS ELEVATED ABOVE THE TOP OF THE ROOF SECONDARY STRUCTURAL MEMBERS. THE ROOF CURB SUB-FRAMING IS LEVEL WITH THE SECONDARY STRUCTURAL MEMBERS. REFER TO THE DETAILS FOR PROPER JAMB LOCATIONS AND DIMENSIONS.

THE ROOF SYSTEM IS DESIGNED AS A FLOATING SYSTEM. CURB FRAMING AND FLASHING MUST BE DESIGNED ACCORDINGLY TO ALLOW THE CURB SYSTEM TO FLOAT WITH THE ROOF DURING THERMAL EXPANSION AND CONTRACTION. ROOF CURBS SHALL NOT SPAN THE RIDGE OF A BUILDING.

INSULATION REQUIREMENTS
INSULATION IS RECOMMENDED TO BE USED IN ALL ROOF APPLICATIONS TO AVOID PROBLEMS WITH CONDENSATION FORMING ON THE UNDERSIDE OF THE SHEETING. THIS ALSO PROVIDES A BUFFER BETWEEN THE PURLINS AND THE ROOF TO ELIMINATE NOISE AND POSSIBLE DAMAGE DUE TO METAL-TO-METAL CONTACT. NOISE REDUCING FOAM TAPE CAN BE SUPPLIED FOR USE IN LIMITED APPLICATIONS (CANOPIES, ETC.) WHEN INCLUDED AS PART OF THE ROOF ORDER. REFER TO THE DETAILS FOR FOAM TAPE REQUIREMENTS.

PAINTED ROOF
PAINTED Loc Seam ROOF PANELS ARE OFTEN PROVIDED BY MBS. IN THIS CASE, GUTTER BRACKETS AND OUTSIDE CLOSURES WILL BE PAINTED TO MATCH THE ROOF COLOR AS A STANDARD.

MASTIC APPLICATION

TEMPERATURE EXTREMES
TEMPERATURE EXTREMES MUST BE CONSIDERED DURING INSTALLATION OF THE ROOF DUE TO THE SENSITIVITY OF MASTICS. THE RECOMMENDED INSTALLATION TEMPERATURE RANGE IS 20-120 DEGREES FAHRENHEIT. AT COLDER TEMPERATURES, THE MASTIC STIFFENS RESULTING IN LOSS OF ADHESION AND COMPRESSIBILITY. AT HOTTER TEMPERATURES, THE MASTIC BECOMES TOO SOFT FOR PRACTICAL HANDLING. ON COLD BUT SUNNY DAYS, THE PANEL SURFACE MAY BECOME WARM ENOUGH TO ACCEPT THE APPLICATION OF HEATED MASTIC EVEN THOUGH THE AIR TEMPERATURE IS BELOW 20 DEGREES FAHRENHEIT.

WHEN OVERNIGHT TEMPERATURES FALL BELOW FREEZING, THE MASTIC SHOULD BE STORED IN A HEATED ROOM SO IT WILL BE WARM ENOUGH TO USE THE FOLLOWING DAY. ON HOT DAYS, THE MASTIC CARTONS SHOULD BE STORED OFF THE ROOF IN A COOL AND SHADED AREA. WHILE ON THE ROOF, MASTIC ROLLS SHOULD BE KEPT SHADED UNTIL ACTUAL USE.

IN VERY COLD WEATHER, IT IS RECOMMENDED THAT THE FASTENERS BE TIGHTENED SLOWLY AND ONLY TIGHT ENOUGH THAT THE MASTIC IS IN FULL CONTACT WITH THE PANEL OR FLASHING. THEN ON THE NEXT SUNNY DAY, COMPLETE THE TIGHTENING PROCESS AFTER THE SUN WARMS THE PANEL AND FLASHING SURFACES.

CONTAMINATION
TO ASSURE PROPER ADHESION AND SEALING, THE MASTIC MUST HAVE COMPLETE CONTACT WITH ADJOINING SURFACES. CONTAMINANTS SUCH AS WATER OIL, DIRT AND DUST PREVENT SUCH CONTACT. THE PANEL AND FLASHING SURFACES MUST BE DRY AND THOROUGHLY CLEANED OF ALL CONTAMINANTS. BEFORE APPLYING TAPE MASTIC, THE MASTIC SHOULD BE CHECKED FOR CONTAMINANTS. IF THE MASTIC SURFACES ARE CONTAMINATED, IT MUST NOT BE USED.

DURING COOL WEATHER, CONDENSATION OR LIGHT MIST CAN ACCUMULATE ON THE PANEL AND FLASHING SURFACE AND NOT BE EASILY NOTICED. IT IS RECOMMENDED THAT THE MASTICS ALWAYS BE KEPT UNDER PROTECTIVE COVER AND THAT THE PANEL AND FLASHING SURFACES BE WIPED DRY IMMEDIATELY BEFORE INSTALLATION.

TAPE MASTIC IS PROVIDED WITH A PROTECTIVE PAPER TO REDUCE CONTAMINATION. INCOMPLETE REMOVAL OF THE PROTECTIVE PAPER WILL PREVENT THE MASTIC ADHESION TO THE PANEL OR FLASHING SURFACES. ALWAYS CHECK THAT THE PROTECTIVE PAPER IS COMPLETELY REMOVED. DO NOT REMOVE THE PROTECTIVE PAPER UNTIL IMMEDIATELY BEFORE THE PANEL OR FLASHING IS INSTALLED OVER THE MASTIC.

COMPRESSION
TO ASSURE PROPER COMPRESSION AND SEAL, THE TAPE MASTIC MUST BE COMPRESSED BETWEEN THE PANEL AND FLASHING SURFACES WITH FIRM AND UNIFORM PRESSURE. IN MOST CASES, THE REQUIRED PRESSURE IS APPLIED BY THE CLAMPING ACTION OF SCREWS PULLING THE ADJOINING SURFACES TOGETHER. HOWEVER, THE TAPE SEALANT'S RESISTANCE TO PRESSURE BECOMES GREATER IN COLD WEATHER.

DURING COLD WEATHER, THE FASTENERS MUST BE TIGHTENED SLOWLY TO ALLOW THE MASTIC TIME TO COMPRESS. IF THE FASTENERS ARE TIGHTENED TOO FAST, THE FASTENERS MAY STRIP OUT BEFORE THE MASTIC COMPRESSES ADEQUATELY, OR THE PANEL OR FLASHING MAY DEFORM IN THE IMMEDIATE AREA OF THE FASTENER, LEAVING THE REST OF THE MASTIC INSUFFICIENTLY COMPRESSED.

INSIDE CORNERS
AN INSIDE RADIUS, SUCH AS WHERE THE PANEL FLAT MEETS A RIB, IS USUALLY THE MOST CRITICAL AREA TO SEAL. A COMMON MISTAKE FOR THE INSTALLER IS TO BRIDGE THE MASTIC ACROSS THE INSIDE RADIUS.

WHEN THE LAPPING PANEL OR FLASHING IS PUSHED INTO PLACE, THE BRIDGED MASTIC IS STRETCHED AND THINNED. THE MASTIC MAY THEN BE TOO THIN TO ADEQUATELY SEAL THIS CRITICAL AREA. WHEN TAPE MASTIC IS APPLIED AT AN INSIDE RADIUS, IT IS RECOMMENDED THAT THE MASTIC BE FOLDED BACK, THEN PUSH THE MASTIC FOLD INTO THE RADIUS.

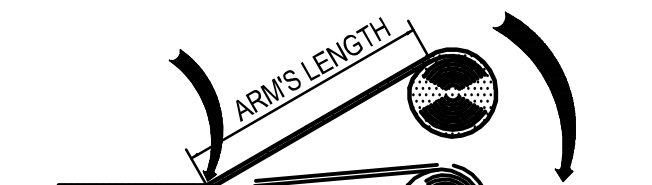

REMOVE PAPER BACKING ONLY AS WORK PROGRESSES

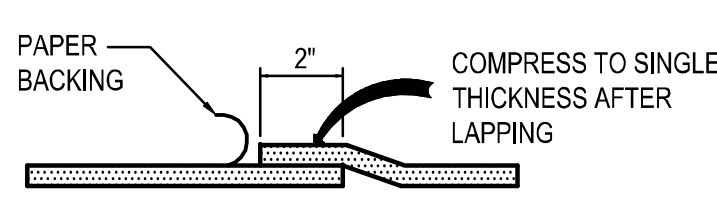

MASTIC LAP

ERECTORS RESPONSIBILITY

REGULATIONS
REGULATIONS SET FORTH BY THE OCCUPATIONAL SAFETY AND HEALTH ACT, LOCAL, STATE, AND/OR FEDERAL AGENCIES SHOULD BE ADHERED TO AT ALL TIMES. MBS IS NOT RESPONSIBLE FOR INJURY, DAMAGE, OR FAILURE, WHICH MAY BE THE RESULT FROM FAILING TO MEET ANY OF THESE REGULATIONS.

IN COMPLIANCE WITH THE HAZARD COMMUNICATION RULE 1910:1200, MATERIAL SAFETY DATA SHEETS (MSDS) HAVE BEEN PROVIDED FOR YOUR USE AND SAFETY. THESE DATA SHEETS SHOULD BE MADE AVAILABLE TO ALL PERSONNEL THAT COME IN CONTACT WITH THESE PRODUCTS. THESE DATA SHEETS WILL GIVE YOU THE NECESSARY INFORMATION TO PROPERLY HANDLE SUCH MATERIALS AND WHAT TO DO IN CASE OF AN EMERGENCY. (THE MSDS SHEETS ARE LOCATED ONLINE AND ARE AVAILABLE UPON REQUEST).

THE ERECTOR OF THE ROOF SYSTEM IS RESPONSIBLE FOR THE SAFE EXECUTION OF THIS DETAIL. THESE INSTRUCTIONS ARE INTENDED TO DESCRIBE THE SEQUENCE AND PROPER PLACEMENT OF PARTS. THEY ARE NOT INTENDED TO PRESCRIBE COMPREHENSIVE SAFETY PROCEDURES. THE PROCEDURES IN THIS DETAIL ARE BELIEVED TO BE RELIABLE. HOWEVER, MBS SHALL NOT BE RESPONSIBLE FOR INJURY, DAMAGE, OR FAILURE DUE TO THE MISAPPLICATION OF THESE PROCEDURES, IMPROPER ERECTION TECHNIQUES, OR NEGLIGENCE

WALKING AND WORKING ON ROOF PANELS
DO NOT PLACE BUNDLES OF PANELS ON THE ROOF STRUCTURE WITHOUT FIRST VERIFYING THE STRUCTURE WILL SAFELY SUPPORT THE CONCENTRATED WEIGHT OF THE PANELS AND THE WEIGHT OF THE INSTALLATION CREW. SOME ROOF STRUCTURES MAY NOT BE DESIGNED TO SUPPORT THE WEIGHT OF A FULL PANEL BUNDLE WITHOUT ADDITIONAL STRUCTURE SUPPORT.

DO NOT USE A ROOF PANEL AS A WORKING PLATFORM. AN UNSECURED PANEL COULD COLLAPSE UNDER THE WEIGHT OF A PERSON STANDING BETWEEN PURLINS OR AT THE PANEL END.

DO NOT WALK ON THE LAST INSTALLED PANEL RUN, AS THE UNSECURED EDGE COULD COLLAPSE UNDER A PERSON'S WEIGHT. WHEN INSTALLING CLIPS OR MAKING END LAP CONNECTIONS, ETC., STAND WHERE THE ROOF STRUCTURAL WILL SUPPORT YOUR WEIGHT.

AN APPROVED AND SAFE WALKING PLATFORM SHOULD BE USED IN HIGH TRAFFIC AREAS TO PREVENT THE ROOF PANEL FROM BEING DEFORMED, SCRATCHED, OR SCUFFED.

SAFETY EQUIPMENT
THE USE OF SAFETY EQUIPMENT FOR THE ROOF PANEL INSTALLATION IS RECOMMENDED AT ALL TIMES DURING THE INSTALLATION PROCESS. HOWEVER, WHEN USING LANYARDS, ENSURE THAT THE CLASP, BELT HOOKS AND WIRE CABLES ARE COVERED IN SUCH A MANNER THAT THEY WILL NOT SCRATCH THE PANEL SURFACE IF ACCIDENTALLY DRAGGED ALONG THE PANEL.

CREW SIZE
THE LENGTH OF THE INDIVIDUAL ROOF PANELS SHOULD BE CONSIDERED WHEN DETERMINING CREW SIZE. IT IS RECOMMENDED THAT UNDER NORMAL CONDITIONS, THERE BE ONE PERSON FOR EVERY TEN FEET OF PANEL LENGTH, PLUS ONE.

PANEL OVERHANG
DO NOT STAND ON THE END OF UNSUPPORTED (CANTILEVERED) PANELS AT THE EAVE OR RIDGE. STANDING ON THE CANTILEVER PORTION MAY RESULT IN PANEL COLLAPSE.

POINT LOADS
WHEN PROPERLY SUPPORTED BY THE STRUCTURAL STEEL, PANELS ARE DESIGNED TO SUPPORT UNIFORM LOADS, WHICH ARE EVENLY DISTRIBUTED OVER THE PANEL SURFACES. POINT LOADS THAT OCCUR IN SMALL OR CONCENTRATED AREAS, SUCH AS HEAVY EQUIPMENT, LADDER, OR PLATFORM FEET, ETC., MAY CAUSE PANEL DEFORMATION OR EVEN PANEL COLLAPSE.

SLICK SURFACES
PANEL SURFACES AND STRUCTURAL STEEL SURFACES ARE HARD, SMOOTH, AND NONABSORBENT, WHICH CAUSES THESE SURFACES TO BE VERY SLICK WHEN WET OR COVERED WITH SNOW OR ICE. EVEN BLOWING SAND OR HEAVY DUST CAN MAKE THESE SURFACES DIFFICULT TO WALK ON WITHOUT SLIPPING.

UNPAINTED PANEL SURFACES ARE OFTEN COATED WITH OIL TO ACCOMMODATE THE PANEL-FABRICATION PROCESS. ALTHOUGH DESIGNED TO WASH AWAY OR EVAPORATE DURING NORMAL WEATHER, THE OIL ON NEW PANELS CAN BE EXTREMELY SLICK, ESPECIALLY DURING PERIODS OF LIGHT RAIN AND DEW.
CAUTION MUST BE EXERCISED TO PREVENT SLIPPING AND FALLING ONTO THE ROOF SURFACE OR EVEN SLIDING OFF THE ROOF. NON-SLIP FOOTWEAR IS A NECESSITY AND NON-SLIP WORKING PLATFORMS ARE RECOMMENDED.

ELECTRICAL CONDUCTANCE
METAL PANELS ARE EXCELLENT ELECTRICAL CONDUCTORS. A COMMON CAUSE OF INJURY IS THE CONTACT OF METAL PANELS WITH POWER LINES DURING HANDLING AND INSTALLATION. THE LOCATION OF ALL POWER LINES MUST BE NOTED AND, IF POSSIBLE, FLAGGED. THE INSTALLATION PROCESS MUST BE ROUTED TO AVOID ACCIDENTAL CONTACT WITH ALL POWER LINES AND HIGH VOLTAGE SERVICES AND EQUIPMENT. ALL TOOLS AND POWER CORDS MUST BE PROPERLY INSULATED AND GROUNDED AND THE USE OF APPROVED GROUND FAULT CIRCUIT BREAKERS IS RECOMMENDED.

FALSE SECURITY OF INSULATION
BLANKET AND RIGID BOARD INSULATION BLOCK THE INSTALLER'S VIEW OF THE GROUND BELOW THE ROOF. SERIOUS INJURY CAN OCCUR WHEN THE INSTALLER GETS A FALSE SENSE OF SECURITY BECAUSE HE CANNOT SEE THE GROUND AND STEPS THROUGH THE INSULATION.

SHARP EDGES
SOME EDGES OR PANELS AND FLASHING ARE RAZOR SHARP AND CAN CAUSE SEVERE CUTS IF PROPER PROTECTIVE HAND GEAR IS NOT WORN. BE CAREFUL NOT TO INJURE OTHERS WHILE MOVING PANELS AND FLASHING.

COORDINATION WITH OTHER TRADES
SUPPORTS FOR THE ROOF SYSTEM SHALL BE PROVIDED AND ARE REQUIRED AS SHOWN IN THE SECTIONS AND AS NOTED IN THESE SPECIFICATIONS. ALL NECESSARY CLEARANCE DIMENSIONS FOR PROPER ELEVATIONS RELATIVE TO THE ROOF PANELS HAVE BEEN SHOWN. THE ERECTOR SHALL BE RESPONSIBLE FOR COORDINATING THESE DIMENSIONAL REQUIREMENTS WITH OTHER TRADES ASSOCIATED WITH THE BUILDING ROOF SYSTEM.

ERECTION CARE
THE ERECTOR MUST BE SKILLED IN THE ERECTION OF METAL BUILDING SYSTEMS AND IS RESPONSIBLE FOR COMPLYING WITH ALL APPLICABLE LOCAL, FEDERAL AND STATE CONSTRUCTION AND SAFETY REGULATIONS INCLUDING OSHA REGULATIONS AS WELL AS ANY APPLICABLE REQUIREMENTS OF LOCAL, NATIONAL OR INTERNATIONAL UNION RULES OR PRACTICES. THE ERECTOR REMAINS SOLELY RESPONSIBLE FOR THE SAFETY AND APPROPRIATENESS OF ALL TECHNIQUES AND METHODS UTILIZED BY ITS CREWS IN THE ERECTION OF THE METAL BUILDING SYSTEM AND/OR THE ROOF SYSTEM. THE ERECTOR IS ALSO RESPONSIBLE FOR SUPPLYING ANY SAFETY DEVICES SUCH AS SCAFFOLDS, RUNWAYS, NETS, ETC. WHICH MAY BE REQUIRED TO SAFELY ERECT THE METAL BUILDING SYSTEM AND/OR ROOF SYSTEM.

THE ERECTOR OF THE ROOF SYSTEM SHALL EXERCISE GREAT CARE AND ATTENTION TO THE DETAILS AS SHOWN ON THESE DRAWINGS TO INSURE A SECURE AND PROPER FIT OF ALL COMPONENTS. MBS SHALL NOT BE RESPONSIBLE FOR SUPERVISING AND/OR COORDINATING THE ERECTION OF THE ROOF SYSTEM WITH OTHER TRADES.

DUE CONSIDERATION MUST BE GIVEN BY THE ERECTOR TO THE EFFECTS OF THERMAL EXPANSION AND CONTRACTION WHEN ERECTING A ROOF TIE-IN TO AN EXISTING STRUCTURE TO INSURE A SAFE, SECURE, WEATHER TIGHT CONDITION. FLASHING FOR TIE-INS TO EXISTING BUILDINGS IS TYPICALLY NOT INCLUDED AS PART OF THE MATERIAL PROVIDED BY MBS. REFER TO THE SECTIONS/DETAILS FOR SPECIFIC MATERIALS PROVIDED BY MBS.

THERMAL BLOCKS

PURPOSE
THERMAL BLOCKS ARE USED IN BOTH INSULATED AND UN-INSULATED CONDITIONS. THEY PROVIDE IMPROVED THERMAL PERFORMANCE WERE INSULATION HAS BEEN COMPRESSED AT THE SECONDARY MEMBERS UNDER THE PANEL. THEY ALSO PROVIDE SUPPORT TO THE PANEL AND REDUCE PANEL FLUTTERING AND RUMBLE IN UN-INSULATED CONDITIONS. UN-INSULATED CONDITIONS UTILIZE THERMAL BLOCKS OR FOAM SPACERS THAT HAVE ADHESIVE TO ADHERE TO THE SECONDARY MEMBER TO PREVENT THEM FROM FALLING OUT OF PLACE.

LOCATIONS
THERMAL BLOCKS OR FOAM SPACERS ARE TO BE USED OVER ANY SECONDARY MEMBER WITH THE EXCEPTION OF THE EAVE MEMBER WHERE THE EAVE PLATE IS LOCATED.

INSULATED ROOF

INSULATION		BLOCK		
R_	THICK	MK #	THICK	CLIP
R7	2"	N/A	N/A	SHORT
R10	3 3/8"	N/A	N/A	SHORT
R11	3 3/4"	N/A	N/A	SHORT
R13	4 3/8"	N/A	N/A	SHORT
R13	4 3/8"	H4400	13/16"	TALL
R16	5 1/4"	H4400	13/16"	TALL
R19	6 3/8"	H4400	13/16"	TALL
R25	8"	H4400	13/16"	TALL

UN-INSULATED ROOF

BLOCK		
MK #	THICK	CLIP
H3310	1/2"	SHORT
H3305	1 1/2"	TALL
FIELD CUT H3305 TO LENGTH FOR PROPER FITTING BETWEEN PANEL CLIPS		

NOTE:
PANEL CLIPS NOT SHOWN FOR CLARITY

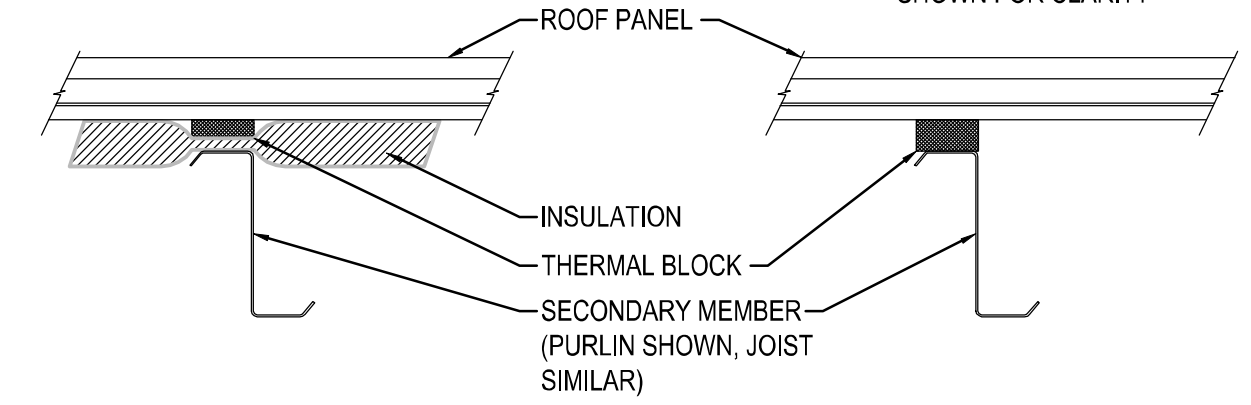

ROOF SYSTEM COMPONENT WITH DETAILING

DEFINITION
COMPONENTS WITH DETAILING DEFINITION IS A CASE WHERE MBS IS PROVIDING THE ROOF SYSTEM TO BE USED IN CONJUNCTION WITH ANOTHER STRUCTURE. MBS REFERS TO THAT AS A "COMPONENTS WITH DETAILING." THIS SIMPLY MEANS THAT MBS SHALL CALCULATE THE QUANTITIES AND LENGTHS FOR THE MATERIAL REQUIRED. MBS IS PERFORMING NO ENGINEERING STUDY OF THE EXISTING STRUCTURE. THE ENGINEER OF RECORD ON THE PROJECT SHALL BE RESPONSIBLE FOR COORDINATING THE ROOF SYSTEM WITH THE OTHER TRADES OF THE PROJECT TO INSURE A SAFE, QUALITY AND PROPER APPLICATION OF THE ROOF SYSTEM.

DIAPHRAGM
THE ROOF IS DESIGNED TO ACCOMMODATE THERMAL EXPANSION AND CONTRACTION AND WILL NOT ACT AS A DIAPHRAGM FOR RESISTING LATERAL LOAD FORCES OR PROVIDING LATERAL STABILITY TO THE ROOF STRUCTURAL MEMBERS. DUE CONSIDERATION FOR THIS MUST BE ADDRESSED BY THE PROJECT ENGINEER OF RECORD. IN ADDITION, THE ROOF SYSTEM, BECAUSE IT IS DESIGNED TO FLOAT, WILL NOT SUPPORT STRUCTURAL MEMBERS LATERALLY. WHEN REPLACING AN EXISTING SCREW DOWN ROOF, ADDITIONAL BRACING MAY BE REQUIRED TO LATERALLY SUPPORT THE MEMBERS. ENGINEERING AND MATERIAL FOR THESE USES SHALL NOT BE PROVIDED BY MBS.

BUILDING & PANEL PREPARATION

STEP 1: PLUMB AND SQUARE
THE FIRST STEP IN THE SUCCESSFUL INSTALLATION OF WALL PANELS IS TO HAVE THE PRIMARY FRAMING PLUMB AND SQUARE. FOR BEST RESULTS, IT IS RECOMMENDED THAT A TRANSIT BE USED WHEN ERECTING THE STRUCTURAL STEEL. MAKE SURE THAT THE FOUNDATION AND BUILDING STRUCTURE IS SQUARE, LEVEL, AND CORRECT TO THE OUT-TO-OUT STEEL LINE DIMENSIONS.
SEE FIGURE "A"

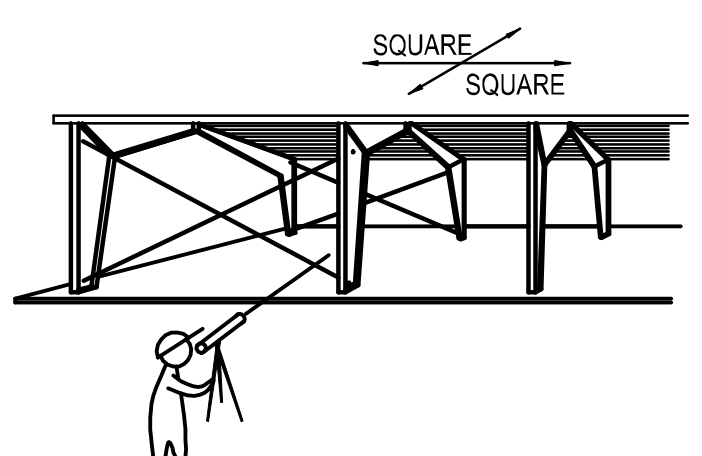

FIGURE "A"

FIELD CUTTING PANELS

WHEN FIELD CUTTING OR MITERING WALL PANELS, NON-ABRASIVE CUTTING TOOLS SUCH AS NIBBLERS OR TIN-SNIPS SHALL BE USED. ABRASIVE CUTTING TOOLS SUCH AS MECHANICAL GRINDERS OR POWER SAWS CAN DAMAGE THE MATERIAL FINISH AND CREATE EXCESS METAL SHAVINGS THAT CAN CORRODE THE PANELS. THE USE OF NON-APPROVED CUTTING DEVICES MAY VOID THE FACTORY WARRANTY.

ANY METAL SHAVINGS THAT ARE CREATED NEED TO BE CLEANED FROM THE PANEL TO PREVENT SCRATCHING AND/OR CORROSION. THE MANUFACTURER WILL NOT ACCEPT CLAIMS FOR DAMAGE/DETERIORATION DUE TO USE OF UNAPPROVED TOOLS.

SPECIAL CONDITION AT A STRONG-BACK EAVE BEAM

IF THIS PROJECT HAS AN EAVE BEAM WITH (2) PURLINS, AS SHOWN, DO NOT ATTACH ROOF CLIPS TO THE "SECOND" PURLIN.

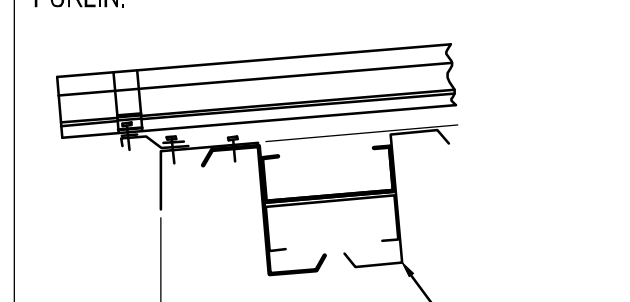

EAVE BEAM AT LOW EAVE

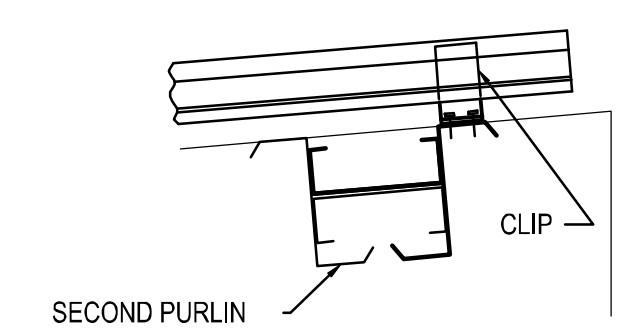

EAVE BEAM AT HIGH EAVE

FASTENER INSTALLATION

RECOMMENDED TOOL TYPES: SEE ALSO FASTENER SCHEDULE
4 AMP OR HIGHER RATED TOOLS (DO NOT USE IMPACTING TOOLS)
2000 - 2500 RPM SCREW GUN WITH TORQUE ADJUSTABLE CLUTCH
MANUAL OR ELECTRIC RIVET TOOL

DO NOT USE IMPACTING TOOLS
TO ASSURE PROPER VOLTAGE TO THE TOOL, EXTENSION CORDS SHOULD BE CHECKED FOR PROPER WIRE SIZE/CHORD LENGTH.
16 GAGE WIRE, MAXIMUM CHORD LENGTH = 100'
14 GAGE WIRE, MAXIMUM CHORD LENGTH = 200'
12 GAGE WIRE, MAXIMUM CHORD LENGTH = 300'

DRIVING TIPS:
SET THE NUT DRIVER AS DESCRIBED BELOW PRIOR TO INSTALLING FASTENERS TO PREVENT FASTENER WOBBLE...

SOCKET EXTENSIONS (4" OR 6") ARE RECOMMENDED TO BE USED FOR INSTALLING PANEL CLIP FASTENERS TO MAINTAIN VERTICAL FASTENER INSTALLATION.

EXCESSIVE PRESSURE CAN CAUSE DRILL POINT FAILURE. LET THE FASTENER DO THE WORK.

DO NOT OVER TIGHTEN FASTENERS AS THIS WILL LEAD TO PANEL DIMPLING AND DISTORTION.

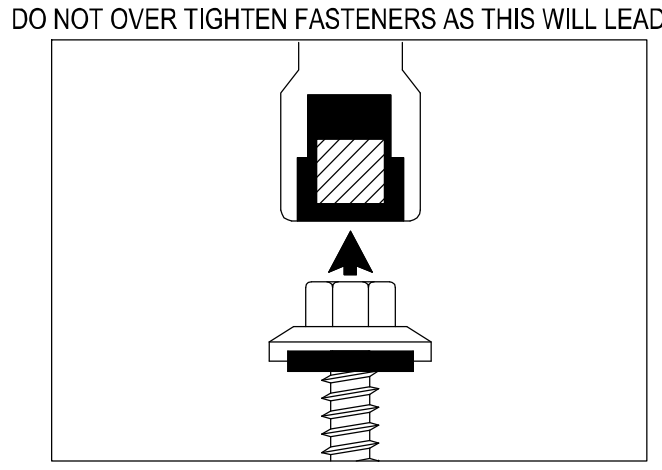

1. PUT THE TOP OF THE FASTENER INTO THE NUT DRIVER. NOTE: FOR PAINTED FASTENERS, PLACE A SINGLE OR DOUBLED LAYER OF PLASTIC BETWEEN THE FASTENER HEAD AND THE NUT DRIVER.

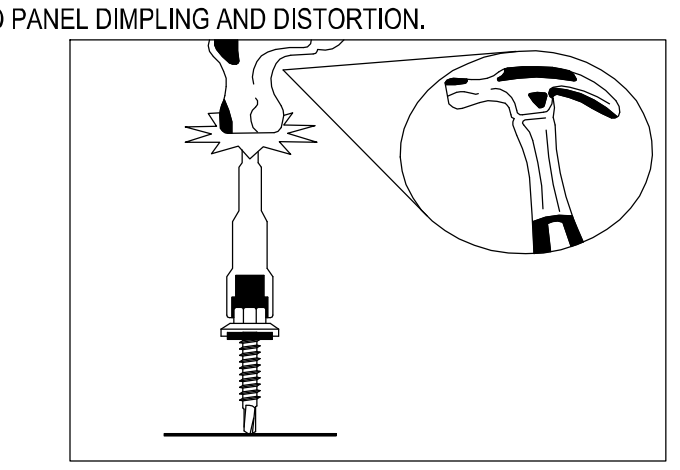

2. PLACE THE POINT OF THE FASTENER ONTO A HARD SURFACE AND FIRMLY HIT THE TOP OF THE NUT DRIVER 2-3 TIMES.

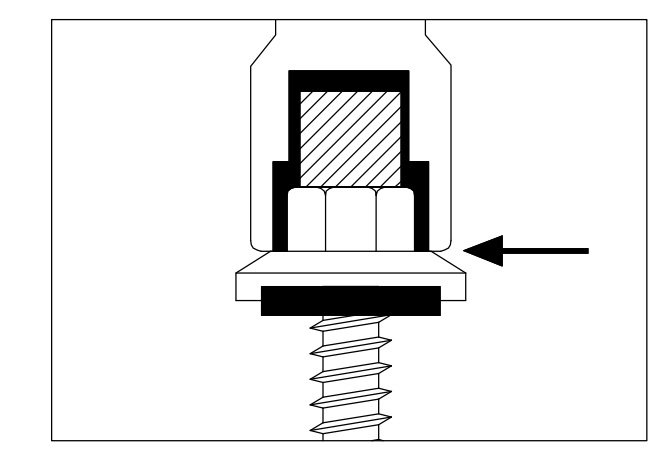

3. THE BASE OF THE NUT DRIVER SHOULD NOW BE CONTACTING THE TOP OF THE HEAD OF THE FASTENER WITH NO GAPS.

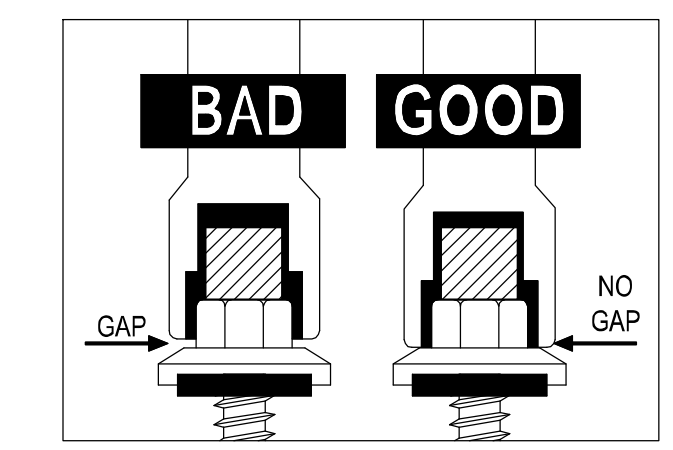

4. BAD SET VS. GOOD SET.

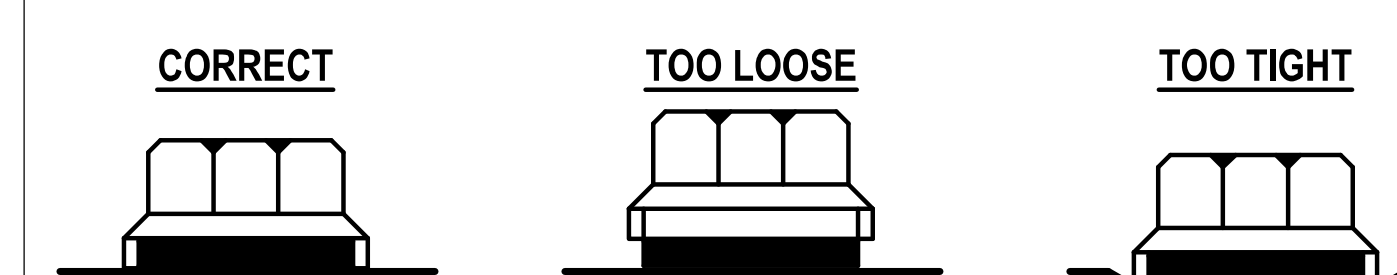

SEALING MATERIAL COMPRESSED UNDER CAP OF FASTENER. | SEALING MATERIAL VISIBLE UNDER CAP OF FASTENER. | SEALING MATERIAL COMPRESSED BUT DIMPLED THE PANEL / TRIM.

STRIP A FASTENER?

IF YOU STRIP H1030 OR H1050 REPLACE IT WITH H1000

IF YOU STRIP H1000 IN ENDLAP YOU MUST REBUILD THE ENDLAP

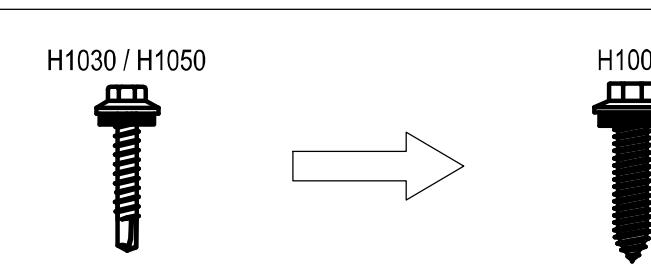

ROOF SHEETING DIRECTION

1.) THE ROOF SHEETING PLAN IS SHOWN WITH THE ROOF PANELS BEING ERECTED FROM "LEFT-TO-RIGHT". IF THE DESIRE IS TO ERECT THE ROOF PANELS FROM "LEFT-TO-RIGHT", FOLLOW THE ROOF SHEETING PLAN AS SHOWN. IF THE DESIRE IS TO ERECT THE ROOF PANELS FROM "RIGHT-TO-LEFT", FOLLOW THE INSTRUCTIONS SHOWN BELOW.

2.) WHEN SETTING BUNDLES OF PANELS ON THE ROOF, THE "MALE RIB" MUST ALWAYS BE AWAY FROM THE END OF THE BUILDING WHERE THE SHEETING WILL BEGIN.



MALE RIB

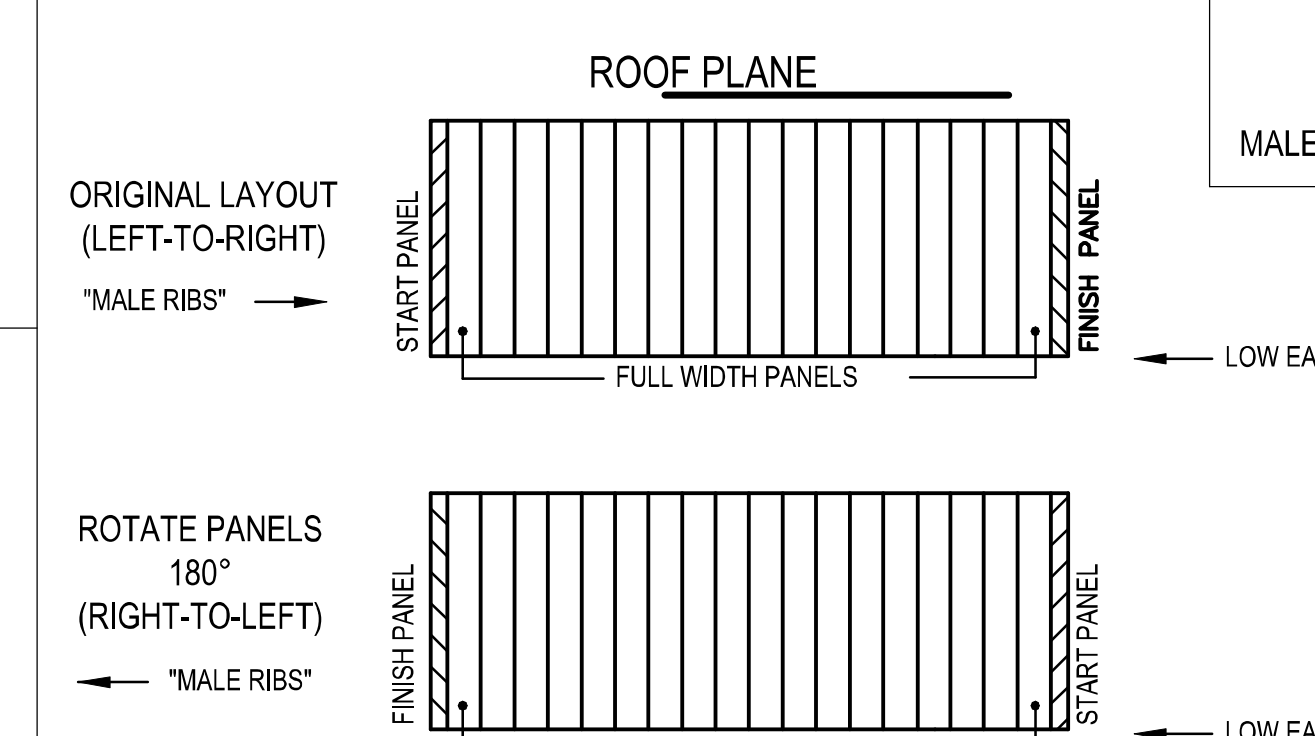

Loc Seam NOTES

EAVE GUTTER DETAIL w/ WALL PANELS
SEE WALL SHEETING ERECTION NOTES FOR WALL PANEL FASTENER LOCATIONS

TRIM_13

ISSUE	DWN	CHK	ENG	PE	DATE
CONST. AB PLAN	NBS	EOP	CBM		7/24/2023
BUILDING DEPARTMENT REVIEW	MBS	DAN	CBM		7/31/2023

NUCOR BUILDING SYSTEMS
305 INDUSTRIAL PARKWAY, WATERLOO, IN 46793
PHONE: (260) 837-7891 FAX: (260) 837-7384
PO BOX 1006, 200 WHETSTONE RD, SWANSEA, SC 29160
PHONE: (803) 568-2100 FAX: (803) 568-2121
600 APACHE TRAIL, TERRELL, TX 75160
PHONE: (972) 524-5407 FAX: (972) 524-5417
1050 WATERY LANE, BRIGHAM CITY, UT 84302
PHONE: (435) 919-3100 FAX: (435) 919-3101

PROJECT NAME
WENDOVER FS #13 REPLACEMENT
WENDOVER, NV

CUSTOMER NAME
MICHAEL CLAY CORP
WINNEMUCCA, NV

JOB NUMBER
U23G0555A

SHEET TITLE

PROFESSIONAL ENGINEER - STATE OF NEVADA
RUSSELL R. SKEEM
07/31/2023
Exp. Jun 30, 2024
CIVIL/STRUCTURAL
No. 016713

This seal pertains only to the materials designed and supplied by Nucor Building Systems, a division of Nucor Corporation. The drawings and the metal buildings which they represent are the product of Nucor Building Systems. The register professional engineer whose seal appears on these drawings is employed by Nucor Buildings Systems and does not serve as or represent the project engineer of record and shall not be construed as such.

SHEET
D10 of 20

BASIC INSTALLATION SEQUENCE

THE FOLLOWING STEPS OUTLINE THE BASIC INSTALLATION OF THE ROOF SYSTEM. REFERENCE THE SPECIFIC DETAILS WITHIN THIS ERECTION DRAWING SET FOR CONDITIONS SPECIFIC TO THIS PROJECT.

START PANEL PREPARATION
THE ROOF SYSTEM IS DESIGNED TO BE ELEVATED AND FLOAT ABOVE THE ROOF SUPPORT MEMBERS. BEGIN AT THE LOWER RAKE CORNER BY INSTALLING THE EAVE PLATE. (REFERENCE EAVE PLATE INSTALLATION BELOW)

AFTER EAVE PLATE HAS BEEN INSTALLED, STITCH THE FIRST ROLL OF ROOF INSULATION FROM RIDGE / HIGH EAVE TO LOW EAVE.

INSTALL THE RAKE CLIPS AND RAKE ANGLE TO SUPPORT / SECURE THE START PANEL. (REFERENCE RAKE ANGLE / RAKE CLIP PREPARATION TO THE RIGHT)

FIELD CUT AND INSTALL START PANEL
THE START PANEL IS SUPPLIED AS A FULL SHEET AND WILL NEED TO BE CUT. REFER TO THE ROOF SHEETING PLAN FOR START / FINISH DIMENSIONS AND RAKE DETAILS TO DETERMINE PROPER PANEL CUT. INSTALL THE START PANEL (LOW EAVE PANEL FIRST IF PANEL RUN IS LONG ENOUGH TO REQUIRE ENDLAPS) BY SECURING THE PANEL TO THE EAVE PLATE AND RAKE ANGLE. (REFERENCE LOW EAVE AND RAKE DETAILS). INSTALL PANEL CLIPS ON LEADING EDGE OF PANEL AS SHOWN IN THE PANEL CLIP DETAIL. CONTINUE TO INSTALL UPSLOPE START PANEL IF ENDLAPS ARE REQUIRED. REFERENCE THE BACKUP PLATE DETAIL AND ENDLAP DETAIL FOR ATTACHMENT OF START PANEL(S) AT RAKE ANGLE.

INTERMEDIATE PANEL & MODULARITY
THE INTERMEDIATE PANELS (FULL PANELS) SHOULD BE INSTALLED BY ROLLING THE PANEL INTO PLACE ENSURING THE SEAM IS FULLY ENGAGED. SECURE THE PANELS WITH PANEL CLIPS AND THE LOW EAVE ACROSS THE ROOF. IT IS RECOMMENDED TO INSTALL THE OUTSIDE CLOSURE AT THE HIGH EAVE / RIDGE AS THE ROOF PROGRESSES. THIS WILL HELP MAINTAIN MODULARITY. (REFERENCE HIGH EAVE / RIDGE DETAILS)

FINISH PANEL
THE FINISH PANEL IS SIMILAR TO THE START PANEL INSTALLATION. THE RAKE ANGLE CLIPS AND RAKE ANGLE NEEDS TO BE INSTALLED ON TOP OF THE INSULATION PRIOR TO INSTALLING THE FINISH PANEL. THE FINISH PANEL SHOULD BE FIELD CUT AND ROLLED INTO PLACE AND SECURED TO THE RAKE ANGLE SIMILAR TO THE START PANEL.

TRIM INSTALLATION
TRIM INSTALLATION CAN BE DONE AFTER THE ROOF PANELS ALL HAVE BEEN INSTALLED OR CAN BE INSTALLED AS ENOUGH PANELS HAVE BEEN INSTALLED FOR ATTACHMENT OF TRIMS. (REFERENCE TRIM DETAILS)

EAVE PLATE INSTALLATION

PLACE TAPE MASTIC ON TOP OF EAVE MEMBER PRIOR TO INSTALLING EAVE PLATE. INSTALL EAVE PLATE BY FASTENING EVERY HOLE TO EAVE MEMBER (6" O.C.) PRIOR TO INSULATION BEING INSTALLED. SECURE INSULATION WITH FASTENER & INSULATION RETAINER WASHER. NOTE: IF NO ROOF INSULATION IS USED SECURE EAVE PLATE IN EVERY HOLE (6" O.C.)

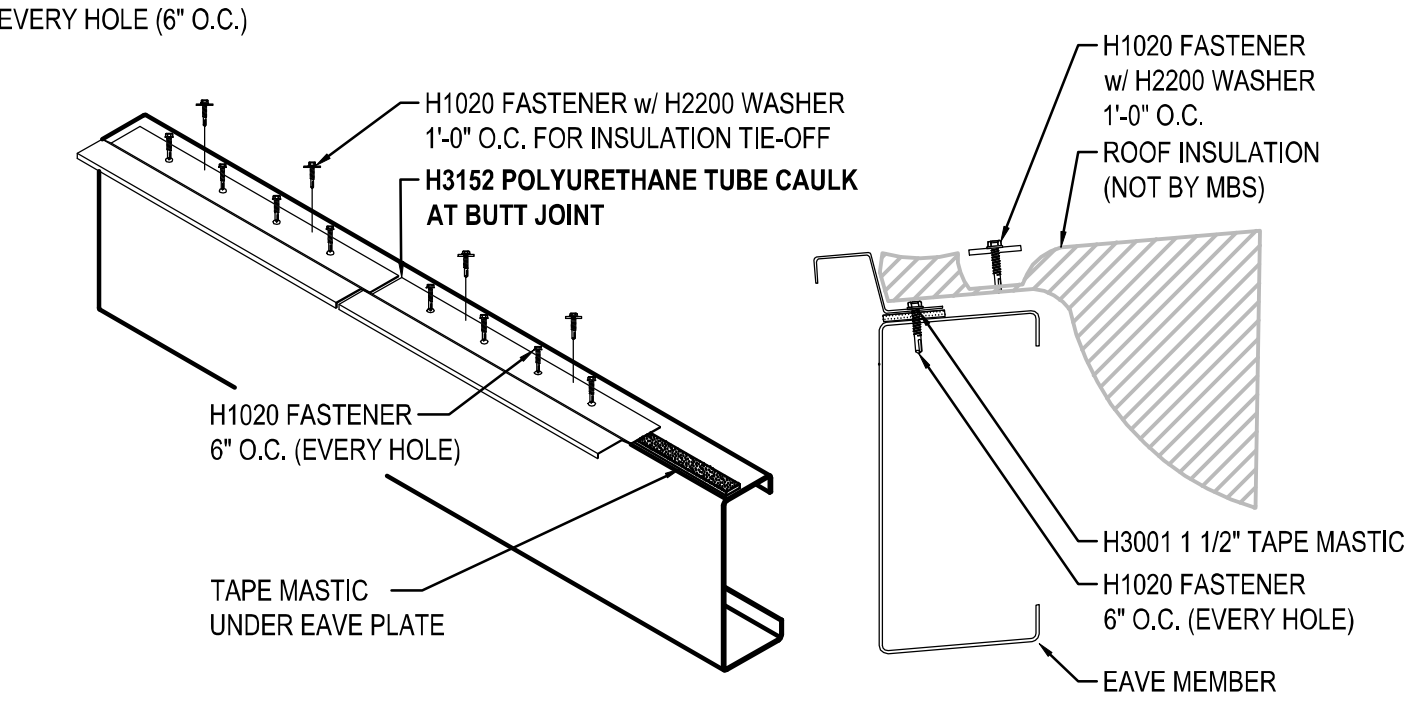

NOTE: H1020/H1070 (PURLIN/JOIST) FASTENER w/ H2200 WASHER
1'-0" O.C. FOR INSULATION TIE-OFF PROVIDED AT HIGH SIDE / RIDGE

SHORT EAVE PLATE		TALL EAVE PLATE	
EPS108	BASIC EAVE / GUTTER	EPT108	BASIC EAVE / GUTTER

PANEL CLIP INSTALLATION

BEFORE INSTALLING THE PANEL CLIP, FEEL FOR THE SUPPORT MEMBER BELOW THE INSULATION. ALIGN CLIP CENTERED OVER THE SUPPORT MEMBER AND ROLL CLIP OVER THE MALE HOOK OF THE PANEL. FASTEN CLIP WITH FASTENERS AS SPECIFIED IN THE DETAILS BASED ON THE SUPPORT MEMBER AND INSULATION UTILIZED FOR THE ROOF SYSTEM.

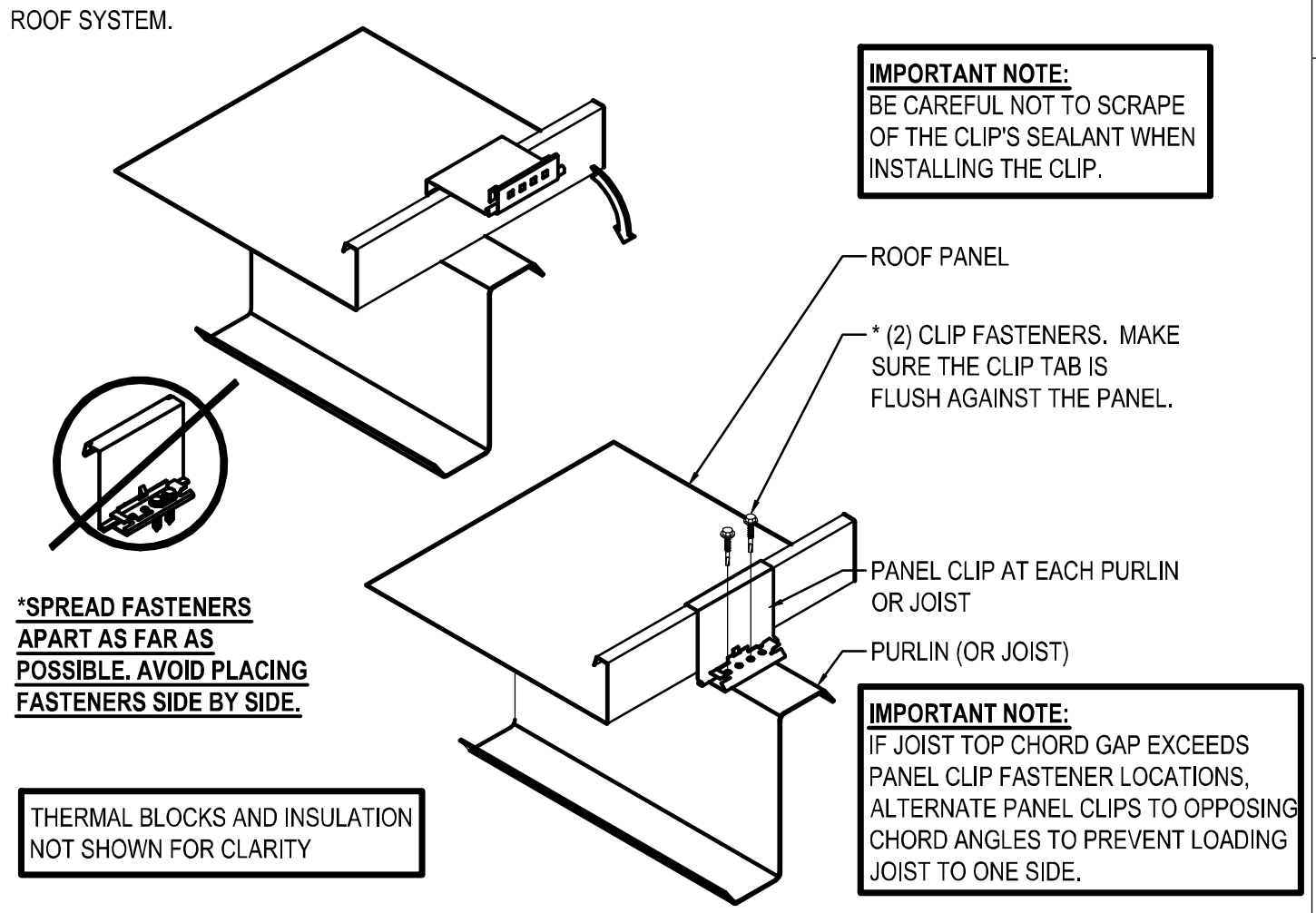

IMPORTANT NOTE:
BE CAREFUL NOT TO SCRAPE OF THE CLIP'S SEALANT WHEN INSTALLING THE CLIP.

***SPREAD FASTENERS APART AS FAR AS POSSIBLE. AVOID PLACING FASTENERS SIDE BY SIDE.**

IMPORTANT NOTE:
IF JOIST TOP CHORD GAP EXCEEDS PANEL CLIP FASTENER LOCATIONS, ALTERNATE PANEL CLIPS TO OPPOSING CHORD ANGLES TO PREVENT LOADING JOIST TO ONE SIDE.

THERMAL BLOCKS AND INSULATION NOT SHOWN FOR CLARITY

STANDARD CLIPS	
PART #	PART DESCRIPTION
H4550	UTILITY FIXED CLIP
LSBC-1	SHORT BEARING CLIP (USED WITH RIGID BOARD)
LSEC-1	SHORT SLIDING CLIP
LSEC-2T	TALL SLIDING CLIP

CLIP FASTENER SELECTION

PURLIN APPLICATION
H1020 FOR INSULATION ≤ R-19 (6 3/8")
H1025 FOR INSULATION = R-25 (8")
H1220 FOR UTILITY CLIP

JOIST APPLICATION
H1070 FOR INSULATION ≤ R-19 (6 3/8")
H1075 FOR INSULATION = R-25 (8")

RAKE ANGLE / RAKE CLIP PREPARATION

PRIOR TO INSTALLING THE ROOF INSULATION THE SECONDARY MEMBER WILL NEED TO BE PRE-DRILLED FOR THE RAKE CLIPS. PRE-DRILLING WILL MAKE INSTALLATION OF THE RAKE AND CLIPS MUCH EASIER AFTER INSULATION IS IN PLACE. DO NOT INSTALL RAKE CLIPS UNTIL INSULATION (IF REQUIRED) IS INSTALLED. **RAKE CLIP IS INSTALLED ON TOP OF THE INSULATION.**

SNAP A CHALK LINE AS SHOWN BELOW FROM HIGH EAVE / RIDGE TO LOW EAVE. DRILL 3/16" Ø HOLE CENTERED ON SECONDARY MEMBER. THIS IS HELPS TO ALIGN THE START PANEL.

NOTE: IMP WALL PANEL >4" THICK REQUIRE ANGLES ON TOP OF SECONDARY MEMBER EXTENDED BEYOND STEEL LINE TO ALLOW FOR RAKE CLIP ATTACHMENT. ATTACH WITH (1) H1020 / H1070 TO PURLIN / JOIST PRIOR TO RAKE CLIP INSTALLATION.

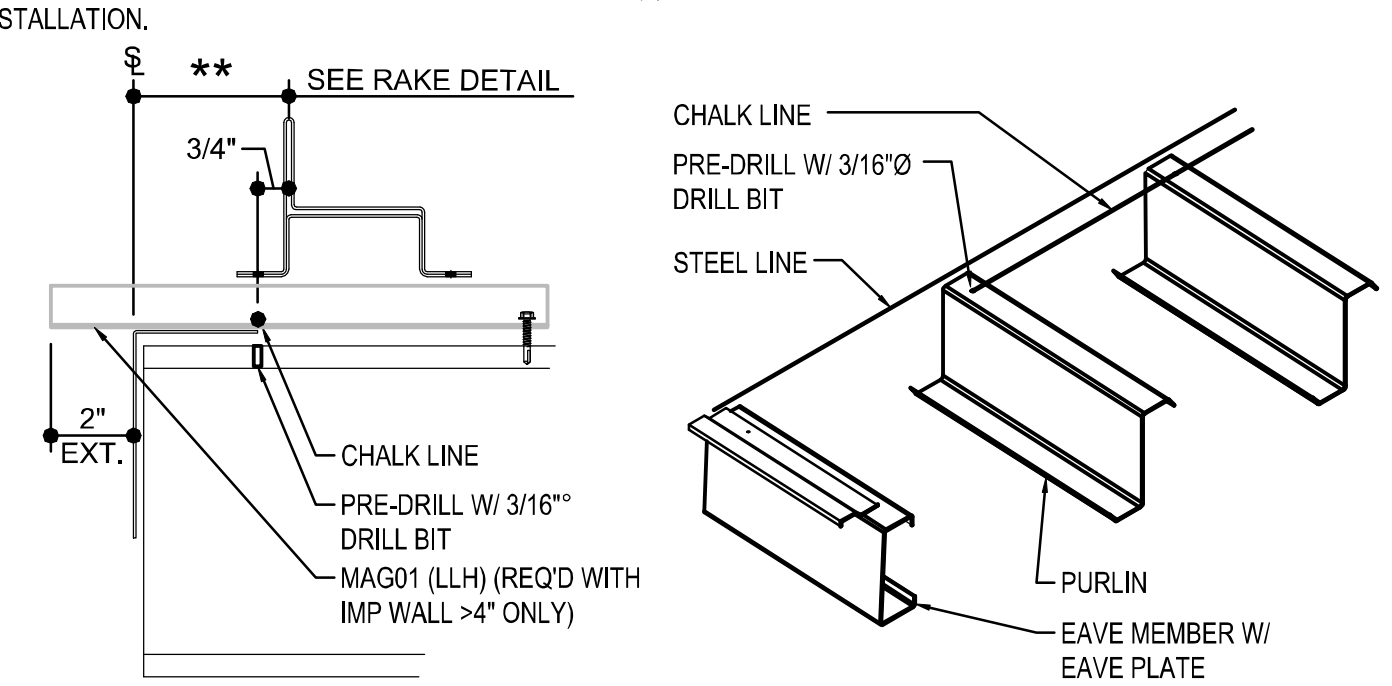

RAKE ANGLE / RAKE CLIP INSTALLATION

AFTER INSULATION IS IN PLACE AND PRIOR TO INSTALLING THE RAKE CLIPS AND RAKE ANGLE APPLY 1 1/2" TAPE MASTIC ON TOP OF THE EAVE PLATE BUT ONLY REMOVE PAPER BACKING WHERE THE RAKE ANGLE WILL REST. THIS WILL SEAL BETWEEN THE EAVE PLATE AND THE RAKE ANGLE.

SLIDE RAKE CLIPS ONTO RAKE ANGLE PRIOR TO SECURING THE RAKE CLIPS TO THE SECONDARY MEMBERS. PLACE THE RAKE CLIPS AND ANGLE OVER THE INSULATION USING A SMALL DRIFT PIN TO LOCATE THE PRE-DRILLED HOLE. INSTALL FASTENER THROUGH OPPOSITE CLIP HOLE INTO SECONDARY MEMBER. REMOVE DRIFT PIN AND INSTALL SECOND FASTENER TO SECURE CLIP. NOTE: (2) SCREWS ARE REQUIRED IN EVERY CLIP. DO NOT CUT INSULATION OUT FROM AROUND THE CLIP.

PLACE ADDITIONAL PIECE OF 1 1/2" TAPE MASTIC ON TOP OF RAKE ANGLE AND MARRY INTO EAVE PLATE MASTIC. NEXT RUN 3/4" TAPE MASTIC ALONG BEND OF RAKE ANGLE.

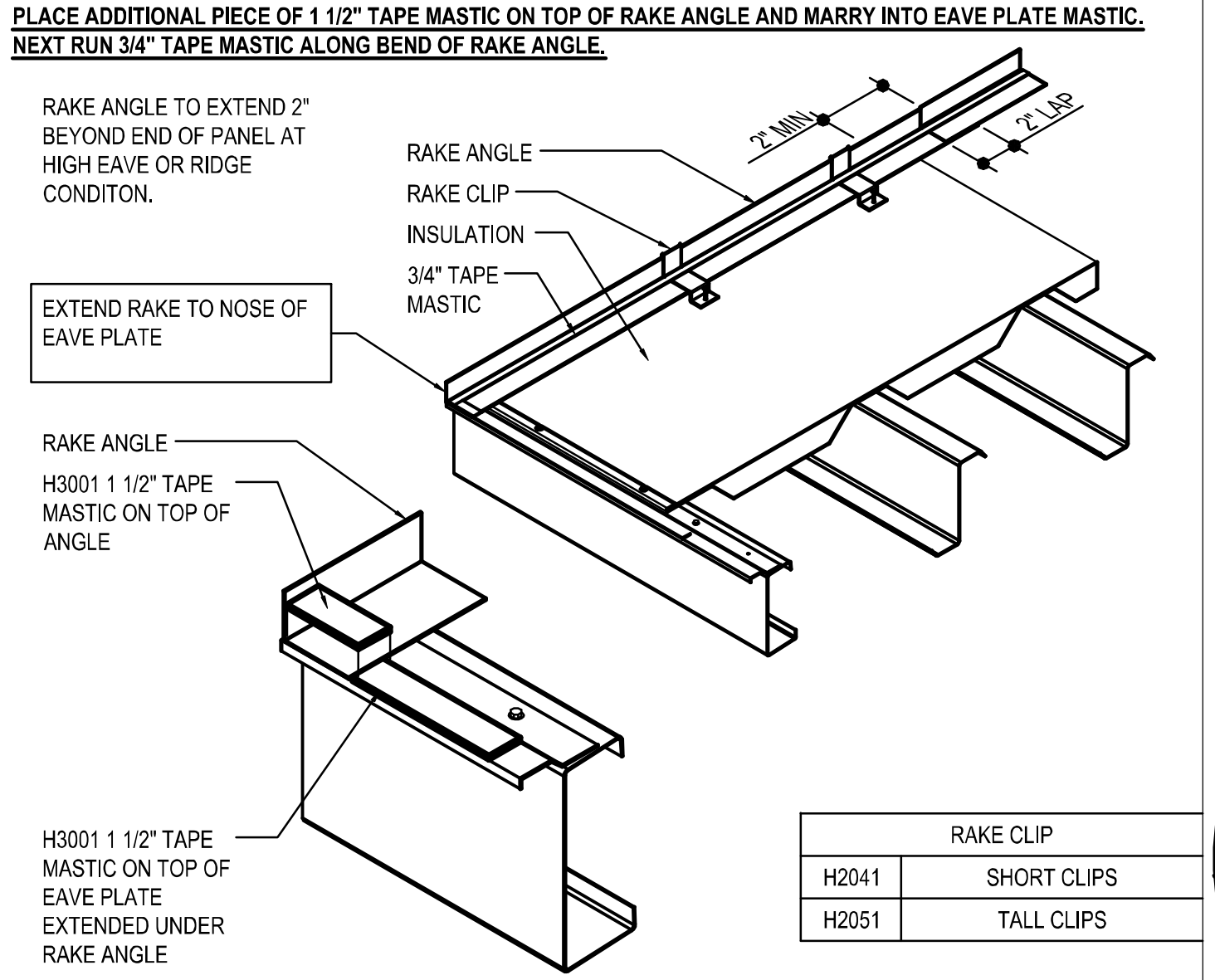

RAKE CLIP	
H2041	SHORT CLIPS
H2051	TALL CLIPS

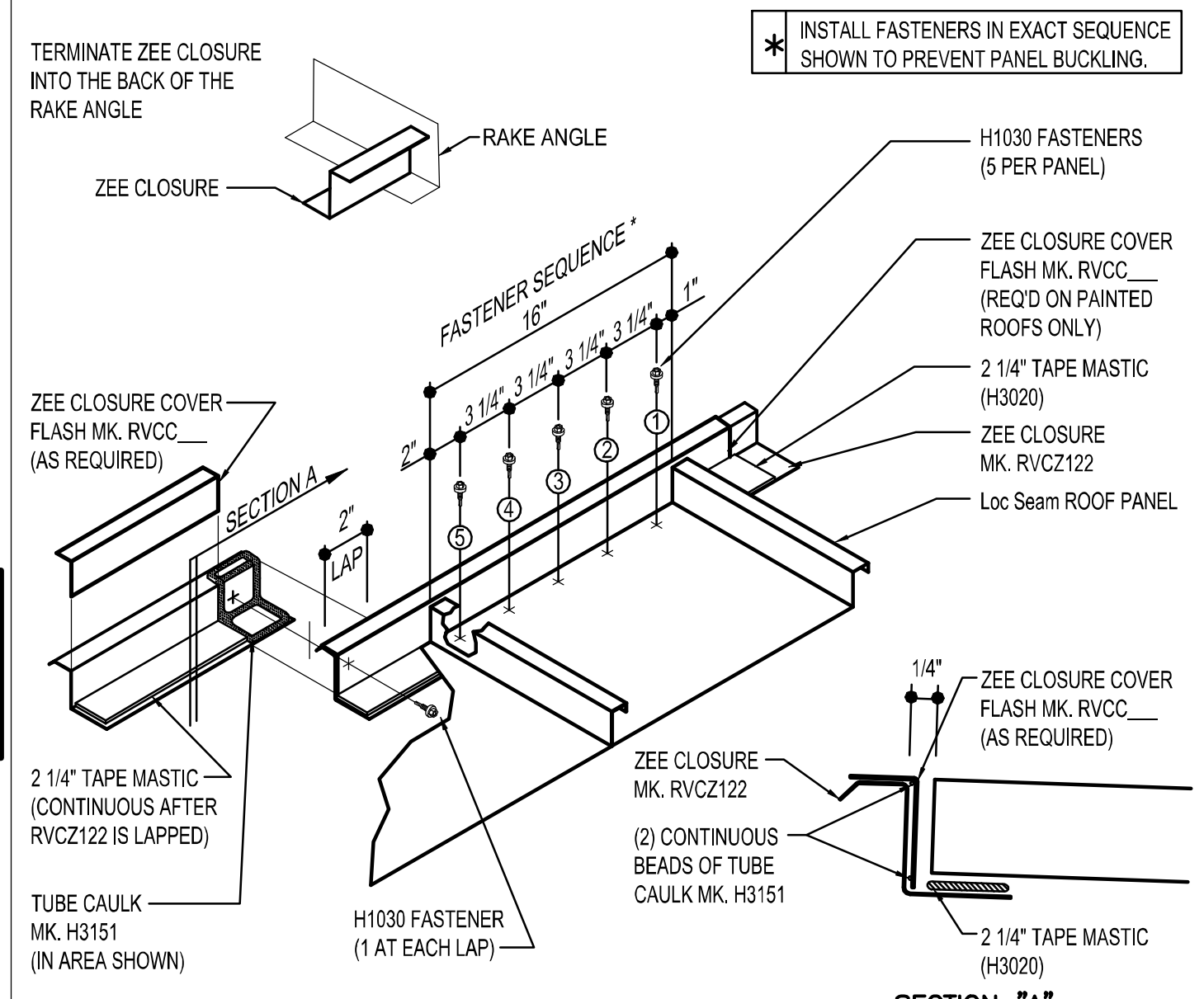

* INSTALL FASTENERS IN EXACT SEQUENCE SHOWN TO PREVENT PANEL BUCKLING.

RIDGE/HIGHSIDE ZEE CLOSURE DETAIL

BACKUP PLATE INSTALLATION

THE BACKUP PLATE PROVIDES SUPPORT AT THE ENDLAP OF THE PANEL TO ALLOW FOR COMPRESSION OF SEALANTS. THE BACK UP PLATE HAS NOTCHES THAT SLIDE ONTO THE PANEL TO LOCATE AND HOLD THE BACKUP PLATE IN PLACE. AT THE RAKE CONDITION, THE BACKUP PLATE IS TO BE FIELD CUT FLUSH WITH THE HORIZONTAL LEG OF THE RAKE ANGLE. DO NOT EXTEND BACKUP PLATE ON TOP OF RAKE ANGLE.

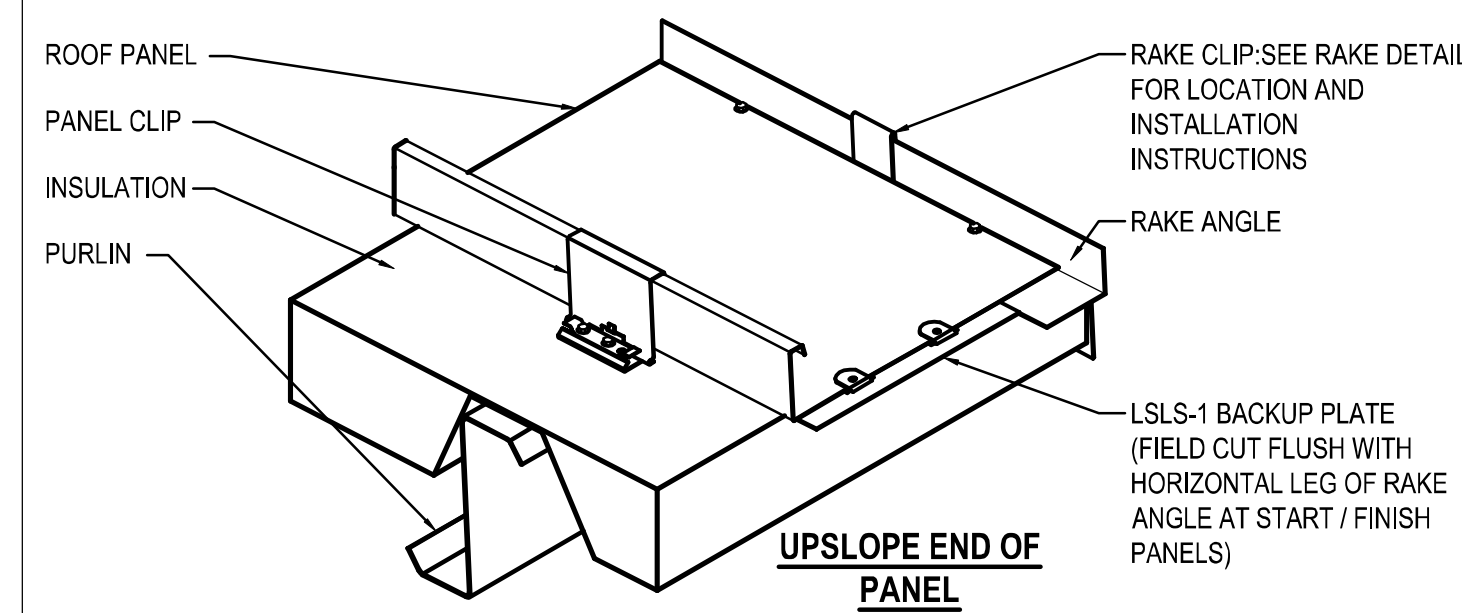

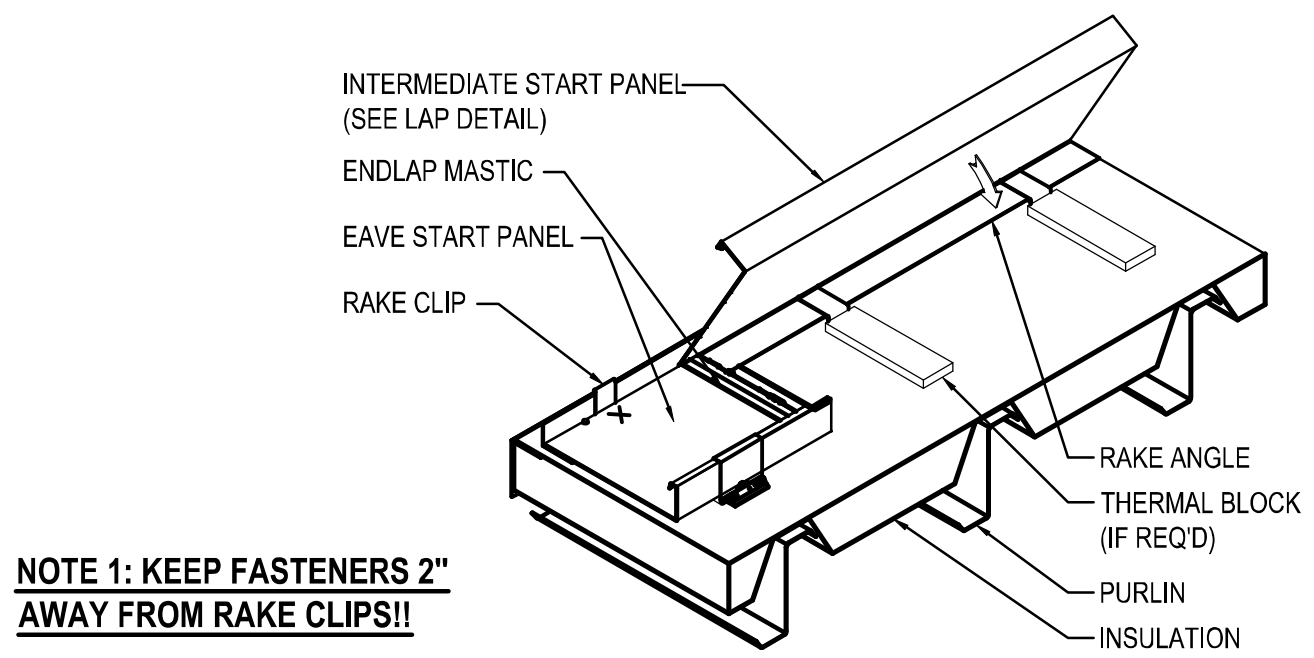

NOTE 1: KEEP FASTENERS 2" AWAY FROM RAKE CLIPS!!

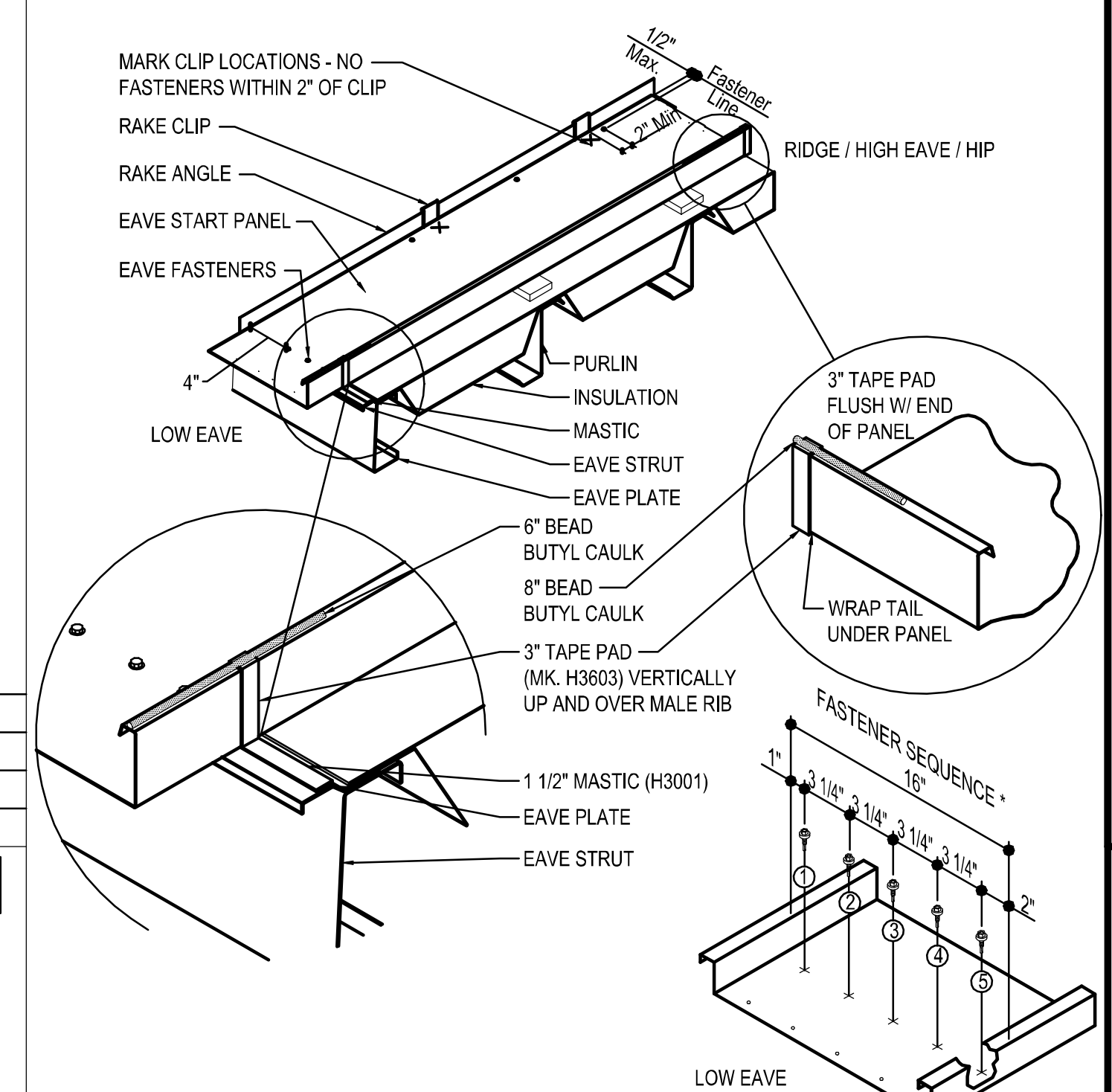

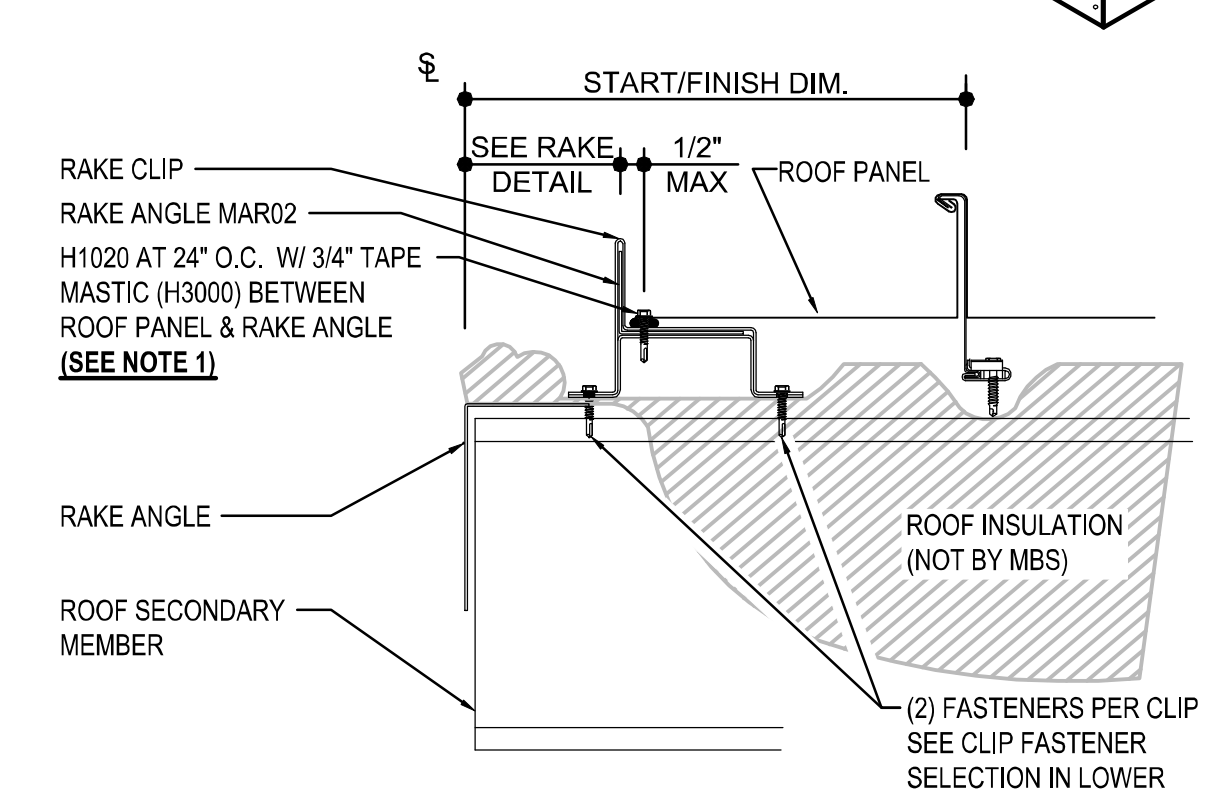

LOC SEAM BASIC INSTALLATION DETAIL

BASIC PANEL INSTALLATION INSTRUCTIONS
SEE ROOFLINE TRIM DETAILS FOR FURTHER INFORMATION

TRIM_14

ISSUE	DWN	CHK	ENG	PE	DATE
CONST. AB PLAN	NBS	EOP	CBM		7/24/2023
BUILDING DEPARTMENT REVIEW	MBS	DAN	CBM		7/31/2023

NUCOR BUILDING SYSTEMS
305 INDUSTRIAL PARKWAY, WATERLOO, IN 46793
PHONE: (260) 837-7891 FAX: (260) 837-7384
PO BOX 1006, 200 WHETSTONE RD, SWANSEA, SC 29160
PHONE: (803) 568-2100 FAX: (803) 568-2121
600 APACHE TRAIL, TERRELL, TX 75160
PHONE: (972) 524-5407 FAX: (972) 524-5417
1050 WATERY LANE, BRIGHAM CITY, UT 84302
PHONE: (435) 919-3100 FAX: (435) 919-3101

PROJECT NAME
WENDOVER FS #13 REPLACEMENT
WENDOVER, NV

CUSTOMER NAME
MICHAEL CLAY CORP
WINNEMUCCA, NV

SHEET TITLE

JOB NUMBER
U23G0555A

PROFESSIONAL ENGINEER - STATE OF NEVADA
RUSSELL R. SKEEM
07/31/2023
Exp. Jun 30, 2024
CIVIL/ STRUCTURAL
No. 016713

This seal pertains only to the materials designed and supplied by Nucor Building Systems, a division of Nucor Corporation. The drawings and the metal buildings which they represent are the product of Nucor Building Systems. The register professional engineer whose seal appears on these drawings is employed by Nucor Buildings Systems and does not serve as or represent the project engineer of record and shall not be construed as such.

SHEET
D11 of 20

PANEL MODULARITY SEQUENCE

THE PROCEDURES AND SEQUENCE SHOWN ARE RECOMMENDED TO AID IN MAINTAINING PANEL MODULARITY.
THE TOOLS SHOWN ARE NOT REQUIRED BUT RECOMMENDED TO AID INSTALLATION.

SPECIAL ATTENTION MUST BE GIVEN TO INSULATION SAG AND RECOMMEND PRE-DRILLING TO LOCATE CLIPS. MODULARITY TOOLS ARE AVAILABLE TO AID IN MODULARITY.

ENSURE THE INSULATION IS PERMITTED TO SAG AT MID-SPAN BETWEEN ROOF SECONDARY MEMBERS AND EXPANDED TO THE FULL THICKNESS WHILE STILL KEEPING CONTACT WITH BOTTOM OF PANEL.

DO NOT PULL THE INSULATION TAUT AS THIS WILL SIGNIFICANTLY REDUCE THE THERMAL PERFORMANCE OF THE ROOF SYSTEM AND COULD CAUSE ROOF PANEL MODULARITY ISSUES.

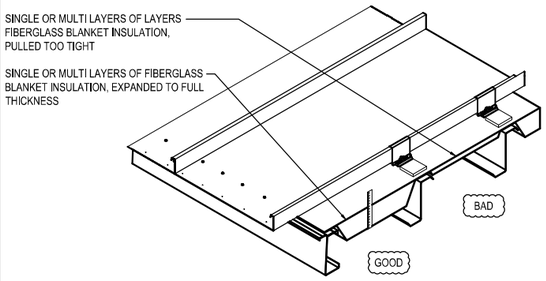

PRE-DRILL ONE PILOT HOLE FOR ROOF PANEL CLIPS AT MID-SPANS, HIGH SIDE OR RIDGE AND PANEL END LAPS, IF ANY.

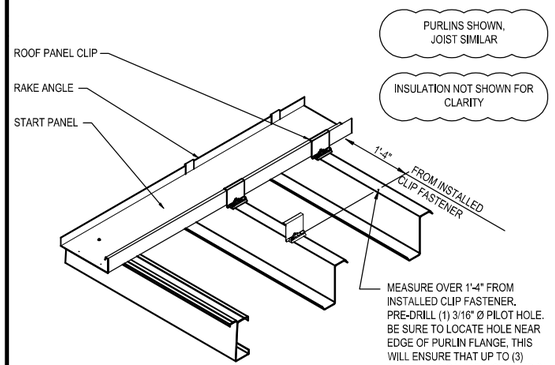

MEASURE OVER 1'-4" FROM INSTALLED CLIP FASTENER. PRE-DRILL (1) 3/16" Ø PILOT HOLE. BE SURE TO LOCATE HOLE NEAR EDGE OF PURLIN FLANGE, THIS WILL ENSURE THAT UP TO (3) FASTENERS CAN BE INSTALLED IN CLIP BASE (IF REQ'D BY DESIGN. REF. ERECTION DRAWINGS FOR FASTENER REQUIREMENTS).

USE RIB CLAMPS TO HOLD PANEL CLIPS IN PLACE, PRIOR TO FASTENING, TO MAINTAIN A CONSTANT 16" WIDE PANEL COVERAGE.

DO NOT ADJUST THE PANEL WIDTH BY MORE THAN ± 1/8" ON ANY PANEL.

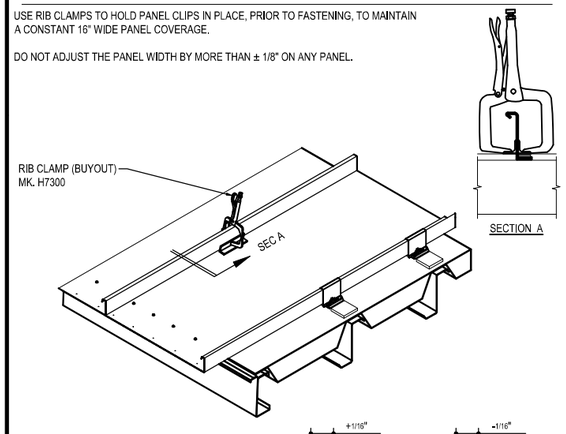

CORRECT PANEL MODULARITY

ADJUSTING PANEL MODULARITY

STAGE #1

1. ROLL FIRST FULL PANEL IN PLACE AND ALIGN CENTER OF PANEL FLAT TO SQUARE AS SHOWN BELOW.
2. APPLY THE LOW EAVE CLAMP AS SHOWN TO DRAW PANEL TIGHT TO CLOSURE.
3. INSTALL THE EAVE FASTENERS STARTING AT LEADING RIB.
4. AS PANEL INSTALLATION PROGRESSES, INSTALL MORE CLAMPS UPSLOPE AS SHOWN.
5. ADD, ADJUST OR LEAVE CLAMPS OFF TO MAINTAIN PANEL MODULARITY AS NECESSARY.
6. LEAVE CLAMPS ON FIRST FULL SEAM.

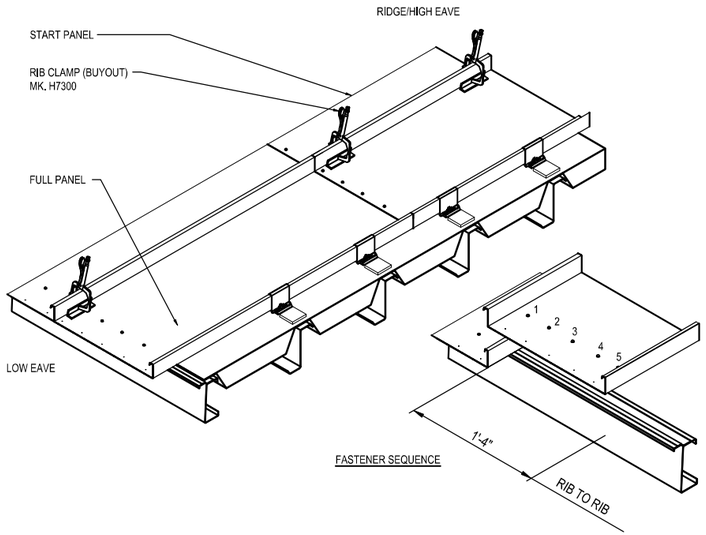

STAGE #2

1. INSTALL THE NEXT LOW EAVE PANEL AND ADD CLAMP.
2. REPEAT STEPS 2 THROUGH 6 FROM STAGE #1 NOTES.
3. LEAVE CLAMPS ON FIRST AND SECOND FULL SEAM.
4. INSTALL THE OUTSIDE CLOSURE IN THE FIRST FULL PANEL.

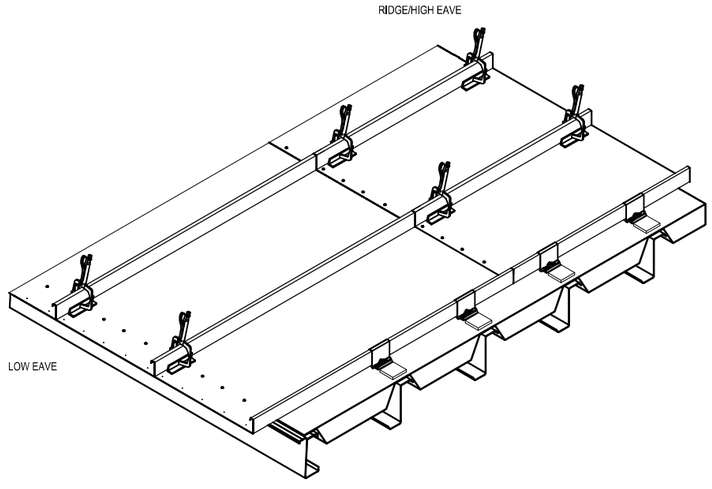

STAGE #3

1. KEEP CLAMPS IN PLACE ON THE FIRST TWO SEAMS WITH THE EXCEPTION OF THE LOW EAVE CLAMP.
2. INSTALL THE NEXT LOW EAVE PANEL AND LEAP FROG CLAMP AS SHOWN.
3. REPEAT STEPS 2 THROUGH 5 FROM STAGE #1 NOTES.

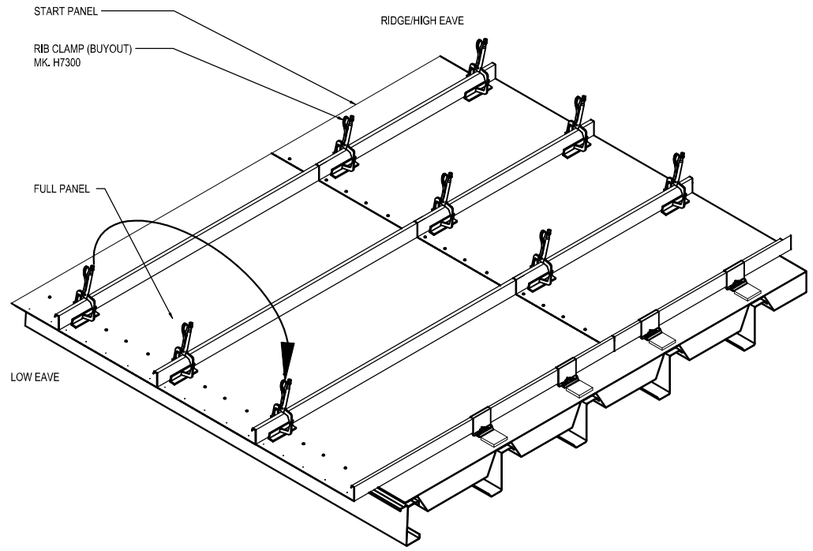

STAGE #4

1. KEEP CLAMPS IN PLACE ON THE FIRST TWO SEAMS WITH THE EXCEPTION OF THE LOW EAVE CLAMP.
2. INSTALL THE NEXT LOW EAVE PANEL AND LEAP FROG THE CLAMP AS SHOWN.
3. INSTALL EAVE PLATE FASTENERS.
4. AS PANEL INSTALLATION PROGRESSES, LEAP FROG CLAMPS FROM THREE SEAMS BACK ONTO PANEL SEAM AS SHOWN.
5. MAINTAIN TWO RUNS OF CLAMPS ON PREVIOUS SEAMS AS PANEL INSTALLATION CONTINUES.
6. REPEAT ALL STEPS / STAGES OF THIS METHOD THROUGHOUT THE ROOF PANEL ERECTION.

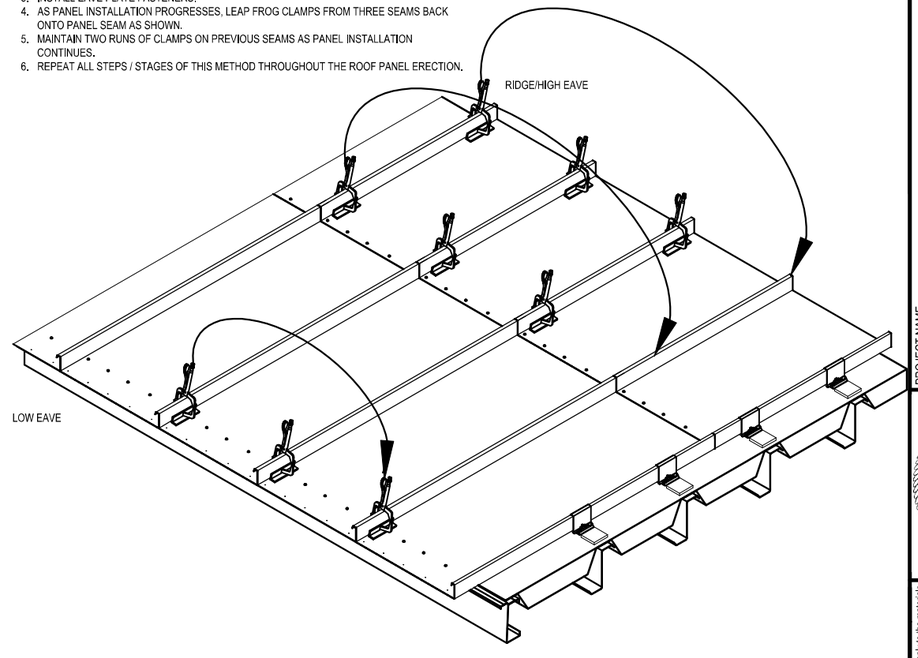

MODULARITY GUIDANCE

SPECIAL ATTENTION TO ABOVE STEPS TO MAINTAIN PROPER PANEL MODULARITY AND THERMAL PERFORMANCE IS CRITICAL. FAILURE TO DO SO WILL RESULT IN UNSIGHTLY PANEL APPEARANCE.

TRIM_15

ISSUE	DWN	CHK	ENG	PE	DATE
CONST. AB PLAN	NBS	EOP	CBM		7/24/2023
BUILDING DEPARTMENT REVIEW	WBS	DAN	CBM		7/31/2023

NUCOR BUILDING SYSTEMS
300 INDUSTRIAL PARKWAY, WATERLOO, IN 46793
PHONE: (260) 837-7891 FAX: (260) 837-7384
PO BOX 1006, 200 WHETSTONE RD, SWANSEA, SC 29160
PHONE: (803) 568-2100 FAX: (803) 568-2121
600 APACHE TRAIL, TERRELL, TX 75160
PHONE: (972) 524-4500 FAX: (972) 524-4417
1050 WATER LANE, BRIGHAM CITY, UT 84302
PHONE: (435) 919-3100 FAX: (435) 919-3101

PROJECT NAME: WENDOVER FS #13 REPLACEMENT
WENDOVER, NV

CUSTOMER NAME: MICHAEL CLAY CORP
WINNEMUCCA, NV

JOB NUMBER: U23G0555A

SHEET TITLE

PROFESSIONAL ENGINEER - STATE OF NEVADA
RUSSELL R. SKEEM
07/31/2023
Exp. Jun 30, 2024
CIVIL/STRUCTURAL
No. 016713

This set of documents and/or the materials described herein, is created by Nucor Building Systems, a division of Nucor Corporation. The drawings and the information they contain are the property of Nucor Building Systems and are not to be used on any other project. Only those drawings which are employed by Nucor Buildings Systems and does not serve as shop drawings and bearing the seal of record and shall not be construed as such.

SHEET
D12 of 20

IMPORTANT NOTE:

THE INSTRUCTIONS ON THIS PAGE ONLY ADDRESS THE USE OF THE HAND CRIMPING TOOLS. INSTRUCTIONS FOR MECHANICAL SEAMING, IF REQUIRED, ARE OUTLINED IN THE SEAMING MANUAL, WHICH IS INCLUDED WITH THE MECHANICAL SEAMER KIT PROVIDED BY THE SEAMER RENTAL COMPANY.

SPECIALIZED SEAMING AND HAND CRIMPING TOOLS
THE FINISHED SEAM OF THE ROOF PANELS REQUIRES SPECIAL SEAMING TOOLS THAT ARE AVAILABLE ONLY THROUGH THE MBS. CAUTION: THE USE OF OTHER SEAMING / CRIMPING EQUIPMENT WILL RESULT IN FAULTY AND / OR DAMAGED SEAMS AND SHALL INVALIDATE ANY OF THE ROOF SYSTEM'S MATERIAL AND WEATHER TIGHTNESS WARRANTIES.

SEAMING TOOL SOURCE
THE SEAMING TOOLS ARE PROVIDED BY MBS IN ACCORDANCE WITH THE TERMS AND CONDITIONS OF THE ORDER DOCUMENTS. CONTACT YOUR SERVICE REPRESENTATIVE TO PURCHASE NECESSARY CRIMPING TOOLS. CONTACT THE SEAMER RENTAL COMPANY FOR RENTAL INFORMATION OF THE MECHANICAL SEAMER IF REQUIRED.

CRIMPING & SEAMING REQUIREMENTS

THE DESIGN OF THIS STRUCTURE REQUIRES SEAMING TO MEET DESIGN AND CODE REQUIREMENTS. SEE THE SEAMING PLAN FOR ROOF PLANE SPECIFIC SEAMING REQUIREMENTS.
THERE ARE THE TWO SEAM TYPES POSSIBLE WITH THE NBG Loc Seam AS NOTED BELOW. ALL OF THESE SEAM TYPES CAN BE ACHIEVED WITH THE AVAILABLE CRIMPERS. IT IS RECOMMENDED TO RENT A MECHANICAL SEAMER TO AID IN THE SEAMING PROCESS.

1. **NBG Loc Seam 90**
   THE Loc Seam 90 SEAM REQUIRES HAND CRIMPING THE ROOF PANEL WITH THE MANUAL SEAMING TOOL AT THE STARTING EAVE OR RIDGE END OF THE PANELS, AND AT THE END LAPS. ONCE THE HAND CRIMPING HAS BEEN COMPLETED, THEN SEAM THE FULL LENGTH OF THE ROOF PANELS WITH THE MOTORIZED SEAMING MACHINE.
2. **NBG Loc Seam 360**
   THE Loc Seam 360 SEAM IS ACHIEVED BY RUNNING THE SINGLE DIRECTIONAL SEAMER OVER THE ENTIRE ROOF. THE ERECTOR MUST FIRST HAND CRIMP ENTIRE ROOF PANEL IN THE Loc Seam 90 SEAM WITH THE MANUAL SEAMING TOOL. BEFORE THE SEAMER IS LOCKED ON, THE LOW END OF THE PANEL MUST BE HAND CRIMPED INTO A NBG Loc Seam 360 SEAM, UTILIZING THE HAND CRIMPER THAT IS SUPPLIED IN THE SEAMER KIT. THIS WILL ENABLE YOU TO LOCK THE SEAMER ONTO THE PANEL SEAM. THEN SEAM THE FULL LENGTH OF THE ROOF PANEL.

NBG Loc Seam 90 SEAM

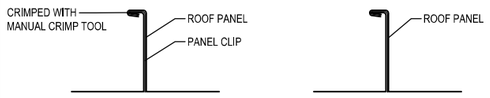

AT PANEL CLIPS — BETWEEN CLIPS

NBG Loc Seam 360 SEAM

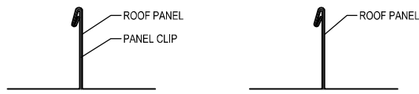

AT PANEL CLIPS — BETWEEN CLIPS

CHECK PANEL ASSEMBLY

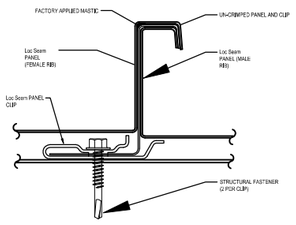

SIDE LAP FIT-UP
BEFORE SEAMING, INSPECT THE FULL LENGTH OF EACH ROOF PANEL SIDE LAP. CHECK THAT THE TWO PANELS ARE PROPERLY HAND CRIMPED AT ALL CLIP LOCATIONS, LOW EAVE, HIGH EAVE AND END LAPS. ANY CONDITIONS WHERE THE PANEL **IS NOT** CRIMPED PROPERLY **MUST** BE CORRECTED BEFORE ATTEMPTING TO SEAM THE ROOF PANELS. **UN-SEAMED ROOF PANELS CANNOT PROVIDE THEIR DESIGNED WIND LOAD AND WEATHER RESISTANCE.**

CLIP ALIGNMENT
BEFORE CRIMPING AND / OR SEAMING, INSPECT THAT EACH ROOF PANEL CLIP IS PROPERLY ENGAGED IN THE SIDE LAP ASSEMBLY. ANY DISPLACED CLIPS MUST BE CORRECTED BEFORE ATTEMPTING TO CRIMP / SEAM THE ROOF PANELS. PANEL CLIPS THAT ARE NOT PROPERLY ENGAGED AND ALIGNED CAN CAUSE FAULTY CRIMP / SEAM AND OBJECTIONABLE SEAM APPEARANCE. **THE MBS NOR THE SEAMER RENTAL COMPANY CAN BE HELD RESPONSIBLE FOR ANY CONCERNS RELATED TO IMPROPERLY ALIGNED CLIPS.**

SEAM DAMAGE
BEFORE CRIMPING AND / OR SEAMING, INSPECT THAT EACH ROOF PANEL MALE AND FEMALE ARE FREE FROM DISTORTION AND KINKS WHICH CAN LEAD TO DIFFICULTY AND / OR DAMAGE TO THE PANEL WHILE ATTEMPTING TO CRIMP / SEAM THE PANEL. ANY DISTORTIONS / KINKS MUST BE CORRECTED BEFORE ATTEMPTING TO CRIMP / SEAM THE PANELS. **THE MBS NOR THE SEAMER RENTAL COMPANY CAN BE HELD RESPONSIBLE FOR ANY CONCERNS RELATED TO DAMAGE CAUSED IN THE FIELD.**

MANUAL CRIMPING TOOL OPERATION FOR Loc Seam 90 SEAM

ASSEMBLE THE SEAMING TOOL
WHEN RECEIVED, THE MANUAL CRIMPING TOOL MAY BE DISASSEMBLED. ASSEMBLE THE HANDLE TO THE TOOL BODY WITH THE PROVIDED BOLTS.

TOOL ORIENTATION TO SEAM
ORIENT THE TOOL TO FIT CORRECTLY ON THE ROOF PANEL SEAM (SEE SECTION A BELOW). THE STATIONARY HANDLE MUST BE IN THE HORIZONTAL POSITION AND THE OPERATING HANDLE MUST BE ROTATED UP TO THE OPEN OR VERTICAL POSITION

FORMING THE SEAM
WHEN THE TOOL IS CORRECTLY POSITIONED ON THE PANEL, PUSH THE STATIONARY BLADE SOLIDLY AGAINST THE TOP OF THE SEAM. WHILE HOLDING THE STATIONARY HANDLE IN THE HORIZONTAL POSITION, ROTATE THE OPERATING HANDLE DOWN TO THE HORIZONTAL POSITION. THIS WILL FORM THE SEAM (SEE SECTION B BELOW).

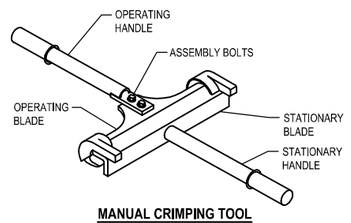

MANUAL CRIMPING TOOL

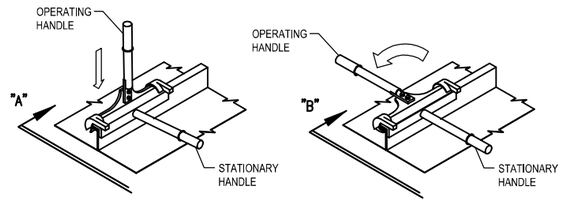

STEP 1 — STEP 2

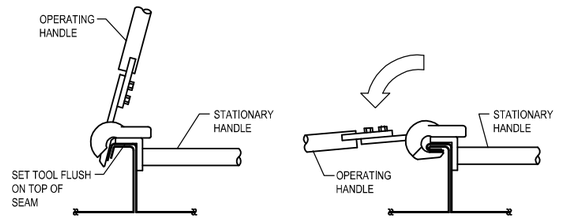

SECTION "A" — SECTION "B"

MANUAL CRIMPING TOOL OPERATION FOR Loc Seam 90 SEAM CONT.

TOOL POSITION ON THE ROOF
WHEN HAND SEAMING AT THE LOW EAVE, RIDGE END, END LAP AND **ALL** ROOF CLIP LOCATIONS. THE SEAMING MUST BE DONE IN TWO STEPS.
STEP 1: POSITION THE CRIMPING TOOL AS SHOWN BELOW IN THE VARIOUS AREAS OF THE ROOF. ROTATE THE MOVEABLE HANDLE DOWN TO FORM A Loc Seam 90 SEAM. RELEASE HANDLE.

STEP 2: RE-POSITION THE CRIMPING TOOL AS SHOWN BELOW AND REPEAT STEP 1.

CHECKING THE FINISHED SEAM
ROTATE THE OPERATING HANDLE TO THE OPEN POSITION, REMOVE THE TOOL AND CHECK THAT THE SEAM IS CORRECTLY FORMED, AS SHOWN BELOW.

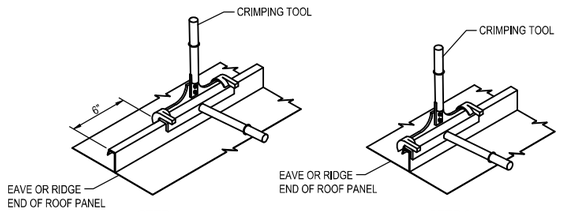

STEP 1 — STEP 2

MANUAL CRIMPING AT THE EAVE

ERECTOR NOTES:
THE ROOF SEAM PROFILE IS COMPLETE ONLY AFTER THE ENTIRE ROOF HAS BEEN MECHANICALLY SEAMED. IF BUILDING HAS LOC SEAM 360 SEAM, DO NOT SEAM / CRIMP THE PANEL INTO A LOC SEAM 360 SEAM 16" UP FROM THE LOW EAVE, OTHERWISE THE GUTTER BRACKET WILL NOT FIT UP PROPERLY.

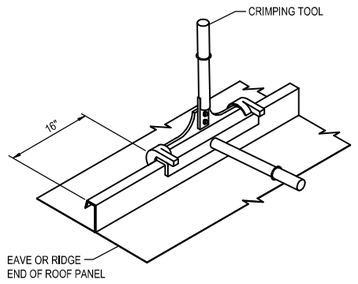

MANUAL CRIMPING AT THE EAVE

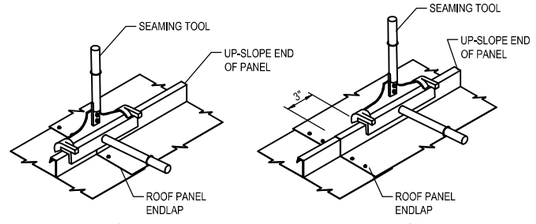

STEP 1 — STEP 2

MANUAL CRIMPING AT THE ENDLAP

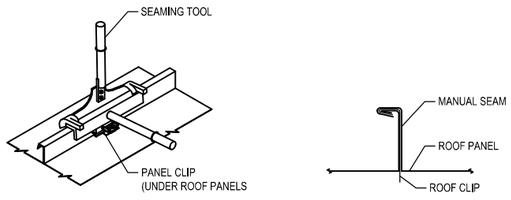

MANUAL CRIMPING AT ALL CLIPS — **FINISHED MANUAL HAND CRIMP**

LOC SEAM HAND CRIMPING NOTES
HAND CRIMING TOOLS AND PROCEDURES

TRIM_16

GUTTER LAP & END CAP

APPLY BEAD OF POLYURETHANE CAULK 1" FROM END OF TRIM AND LAP SECTIONS 2" AND FASTEN AS SHOWN. TO TERMINATE THE GUTTER APPLY POLYURETHANE CAULK TO THREE SIDES OF END CAP AND TOP RETURN AREA AS SHOWN AND INSERT INTO THE GUTTER LEAVING 1/2" EXPOSED. ATTACH WITH RIVETS SAME AS END LAP.

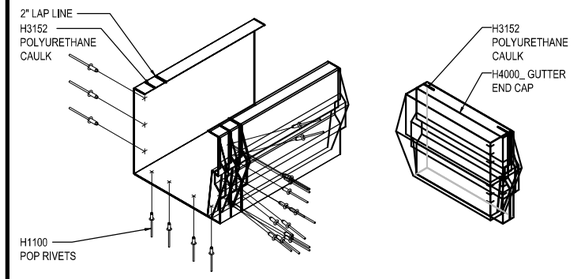

NOTE 1: PANEL RIB MUST BE HAND CRIMPED 90° (NOT 360°) PRIOR TO INSTALLING GUTTER BRACKET!

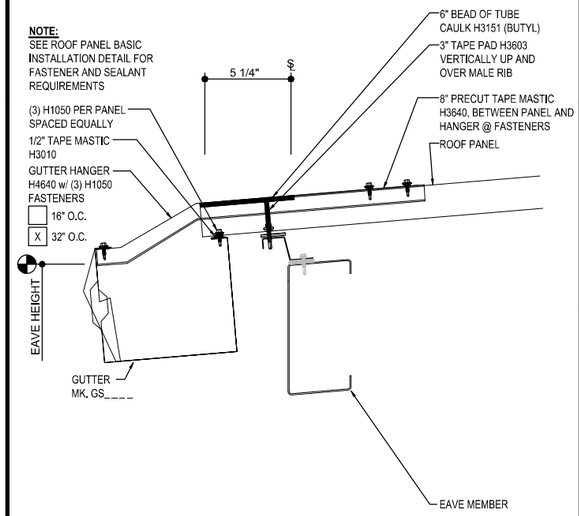

ON-SLOPE GUTTER DETAIL
EAVE GUTTER DETAIL w/ NO WALL PANEL

TRIM_17

ISSUE	DWN	CHK	ENG	PE	DATE
CONST. AB PLAN	NBS	EOP	CBM		7/24/2023
BUILDING DEPARTMENT REVIEW	WBS	DAN	CBM		7/31/2023

NUCOR BUILDING SYSTEMS
300 INDUSTRIAL PARKWAY, WATERLOO, IN 46793
PHONE: (260) 837-7891 FAX: (260) 837-7384
PO BOX 1006, 200 WHETSTONE RD, SWANSEA, SC 29160
PHONE: (803) 568-2100 FAX: (803) 568-2121
600 APACHE TRAIL, TERRELL, TX 75160
PHONE: (972) 551-6200 FAX: (972) 551-6417
1000 WATERY LANE, BRIGHAM CITY, UT 84302
PHONE: (435) 919-3100 FAX: (435) 919-3101

PROJECT NAME: WENDOVER FS #13 REPLACEMENT
WENDOVER, NV
CUSTOMER NAME: MICHAEL CLAY CORP
WINNEMUCCA, NV
JOB NUMBER: U23G0555A
SHEET TITLE



This set of plans and/or specifications is the materials designed and created by Nucor Building Systems, a division of Nucor Corporation. The drawings and the notes thereon, shown and specified, are the property of Nucor Building Systems and are to be used only with respect to the project for which they are prepared. Nucor Building Systems expressly reserves its common law copyright and other property rights in these plans. These drawings is employed by Nucor Building Systems and does not serve as a construction document unless signed and sealed and shall not be construed as such.

SHEET: D13 of 20

RAKE LAP & FLASHING BACKER

SLIDE FIELD CUT SECTION OF FLASHING ENDLAP BACKER ONTO THE LOWER TRIM PIECE AS SHOWN BELOW. PLACE TAPE MASTIC NEXT TO HEM OF THE BACKER (NOT ON TOP OF HEM). APPLY CONTINUOUS BEAD OF CAULK 1" FROM END OF TRIM DOWN PROFILE OF TRIM. FASTEN LAP WITH STITCH FASTENERS AND POP RIVETS AS SHOWN. ROOF STRUCTURAL FASTENERS SHOULD BE USED TO FASTEN THROUGH PANEL FLAT INTO RAKE ANGLE.

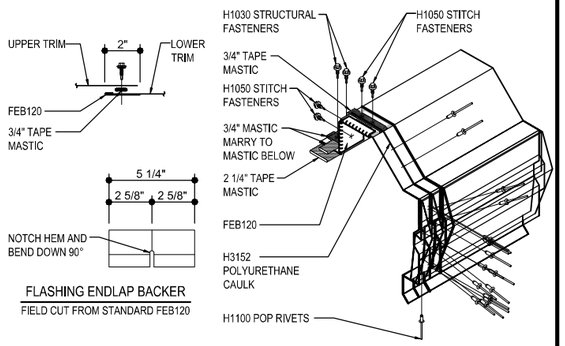

FLASHING ENDLAP BACKER

FIELD CUT FROM STANDARD FEB120

NOTE 1: KEEP FASTENERS 2" AWAY FROM RAKE CLIPS!!

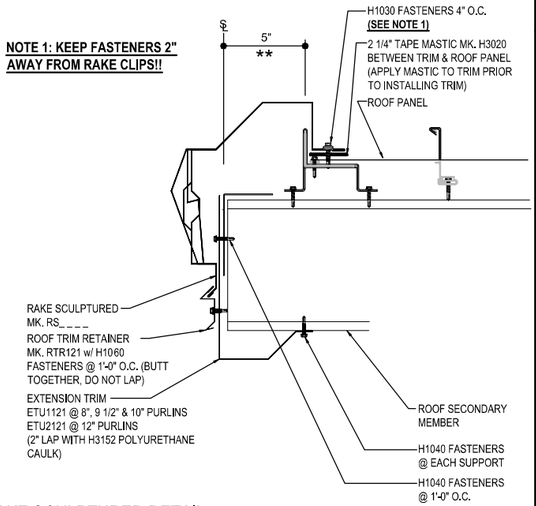

RAKE SCULPTURED DETAIL

RAKE SCULPTURED DETAIL w/ NO WALL PANEL

TRIM_18

PARAPET LAP & FLASHING BACKER

SLIDE FIELD CUT SECTION OF FLASHING ENDLAP BACKER ONTO THE LOWER TRIM PIECE AS SHOWN BELOW. PLACE TAPE MASTIC NEXT TO HEM OF THE BACKER (NOT ON TOP OF HEM). FASTEN LAP WITH STITCH FASTENERS. ROOF STRUCTURAL FASTENERS SHOULD BE USED TO FASTEN THROUGH PANEL FLAT INTO RAKE ANGLE.

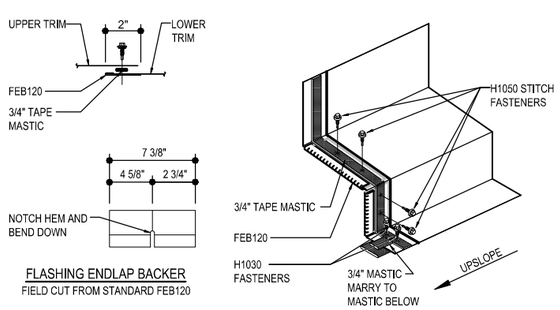

FLASHING ENDLAP BACKER

FIELD CUT FROM STANDARD FEB120

NOTE 1: KEEP FASTENERS 2" AWAY FROM RAKE CLIPS!!

NOTE 2: AS A STANDARD, PANELS WILL BE STEPPED IF ROOF SLOPE IS < 1/2:12
FIELD MITERING WILL BE REQUIRED IF ROOF SLOPE IS > 1/2:12

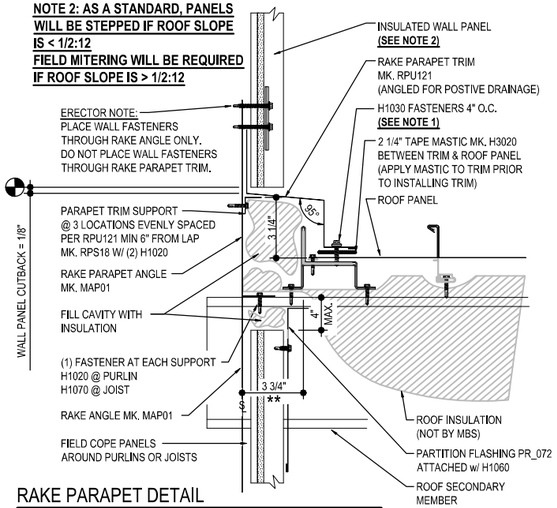

RAKE PARAPET DETAIL

RAKE PARAPET DETAIL w/ INSULATED WALL PANELS
SEE INSULATED WALL SHEETING ERECTION DETAILS FOR INSTALLATION INSTRUCTIONS.

TRIM_19

RIDGE CAP LAP & FLASHING BACKER

SLIDE FIELD CUT SECTION FLASHING ENDLAP BACKER ONTO THE LOWER TRIM PIECE. PLACE TAPE MASTIC NEXT TO HEM OF THE BACKER (NOT ON TOP OF HEM). MARRY LAP MASTIC WITH MASTIC BETWEEN RIDGE CAP AND RIDGE CLOSURE ZEE.

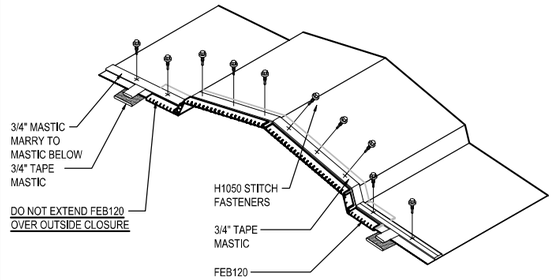

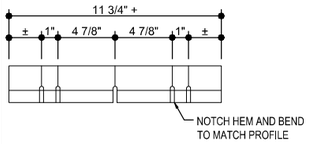

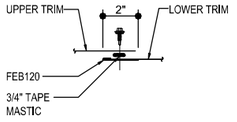

FLASHING ENDLAP BACKER

FIELD CUT FROM STANDARD FEB120

FILL RIDGE CAP WITH INSULATION TO PREVENT CONDENSATION

RIDGE CAP OPTIONS	
ROOF SLOPE	MARK NUMBER
> 1/4:12 & < 4:12	RVL3121
> 4:12 & < 6:12	RVL6121

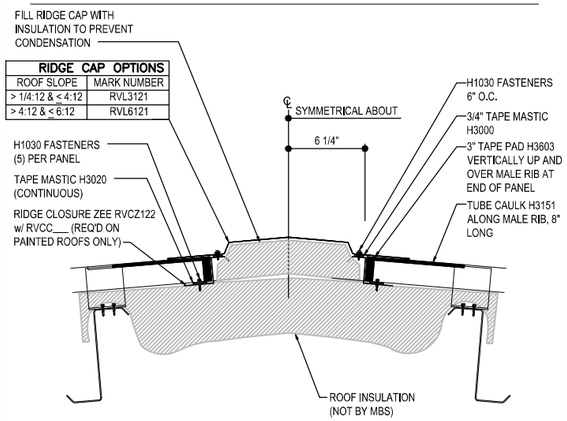

RIDGE TRIM DETAIL

RIDGE TRIM DETAIL

TRIM_20

ISSUE	DWN	CHK	ENG	PE	DATE
CONST. AB PLAN	NBS	EOP	CBM		7/24/2023
BUILDING DEPARTMENT REVIEW	WBS	DAN	CBM		7/31/2023

NUCOR BUILDING SYSTEMS
300 INDUSTRIAL PARKWAY, WATERLOO, IN 46793
PHONE: (260) 837-7891 FAX: (260) 837-7384
PO BOX 1006, 200 WHETSTONE RD, SWANSEA, SC 29160
PHONE: (803) 568-2100 FAX: (803) 568-2121
600 APACHE TRAIL, TERRELL, TX 75160
PHONE: (972) 524-4500 FAX: (972) 524-4417
1050 WATER LANE, BRIGHAM CITY, UT 84302
PHONE: (435) 919-3100 FAX: (435) 919-3101

PROJECT NAME: WENDOVER FS #13 REPLACEMENT
WENDOVER, NV

CUSTOMER NAME: MICHAEL CLAY CORP
WINNEMUCCA, NV

JOB NUMBER: U23G0555A

SHEET TITLE

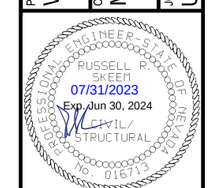

This set of plans and/or specifications is the property of Nucor Building Systems, a division of Nucor Corporation. The drawings and the information shown thereon are the property of Nucor Building Systems and are not to be reproduced, published or used in any way without the permission of Nucor Building Systems. The architect/engineer employed by Nucor Buildings Systems and does not serve as an architect/engineer of record and shall not be construed as such.

SHEET: D14 of 20

SUGGESTED INITIAL PROCEDURES FOR INSTALLER:

1) CHECK ALL APPLICABLE FEDERAL, STATE AND LOCAL CODES TO VERIFY COMPLIANCE WITH THE CODE.

2) BE CERTAIN THAT SITE CONDITIONS ARE SUCH THAT SAFE WORKING PRACTICES ARE STRICTLY OBSERVED.

3) REVIEW ALL INSTALLATION DRAWINGS AND ASSOCIATED PROJECT DOCUMENTS.

4) CONSULT WITH THE GENERAL CONTRACTOR, DESIGN ENGINEER, ARCHITECT AND/OR OWNER TO CONFIRM THOSE RECOMMENDED.

5) COMPLY WITH ALL SAFETY REGULATIONS.

IT IS THE RESPONSIBILITY OF THE DESIGNER / CONTRACTOR / INSTALLER TO ENSURE THAT THE DETAILS AND INSTALLATION PROCEDURES ARE ADAPTED TO MEET PARTICULAR BUILDING REQUIREMENTS.
THE METAL BUILDING / PANEL SUPPLIER SHALL NOT BE HELD LIABLE FOR ANY AND ALL CLAIMS ARISING FROM LACK OF PROPER INSTALLATION. THE DESIGNER / INSTALLER MUST BE AWARE OF AND ALLOW FOR EXPANSION AND CONTRACTION OF WALL PANELS WHEN DESIGNING AND/OR INSTALLING WALL PANELS.

SOME FIELD CUTTING IS PART OF NORMAL ERECTION WORK. WORKMANSHIP SHALL CONFORM TO THE HIGHEST INDUSTRY STANDARDS. A CERTAIN AMOUNT OF WAVINESS CALLED "OIL CANNING" MAY EXIST IN THE PANEL. MINOR WAVINESS IS NOT SUFFICIENT CAUSE FOR REJECTION AND DOES NOT AFFECT THE STRUCTURAL INTEGRITY OF THE PANEL. MINIMIZING OR ELIMINATION THIS EFFECT CAN BE ACCOMPLISHED BY USING SIMPLE INDUSTRY STANDARD PROCEDURES DURING SURFACE PREPARATION.

NOTES FOR HANDLING PANELS AND COMPONENTS:

INSULATED PANELS ARE CAREFULLY INSPECTED AND BUNDLED PRIOR TO LOADING FOR SHIPMENT. IT IS THE RESPONSIBILITY OF THE TRANSPORTATION COMPANY TO DELIVER THESE COMPONENTS UNDAMAGED. IT IS THE CONSIGNEE'S RESPONSIBILITY TO INSPECT THE SHIPMENT FOR DAMAGE AND SHORTAGES WHEN IT IS RECEIVED.

WHEN A SHIPMENT IS RECEIVED, CHECK EACH ITEM AGAINST THE BILL OF LADING FOR QUANTITY, LENGTH, DAMAGE, ETC. IF A SHORTAGE OR DAMAGE IS FOUND, MAKE SURE A NOTATION OF IT IS MADE ON THE BILL OF LADING AND SIGNED BY THE DRIVER. THE MANUFACTURE CANNOT BE RESPONSIBLE FOR SHORTAGES OR DAMAGED MATERIALS UNLESS THEY ARE NOTED ON THE BILL OF LADING.

IN THE CASE OF PACKAGED COMPONENTS (SUCH AS CLIPS, FASTENERS, AND SEALANTS, ECT.), THE QUANTITIES ARE MARKED ON THEIR CONTAINER AND SHOULD BE CHECKED AGAINST THE BILL OF MATERIALS.

IT IS THE CUSTOMER'S RESPONSIBILITY TO MAKE ANY DAMAGE CLAIM. IMMEDIATELY NOTIFY THE DESIGNATED CUSTOMER SERVICE COORDINATOR OF ANY SHORTAGES OR DAMAGED MATERIALS. THIS WILL HELP TO MINIMIZE ANY ERECTION DELAYS THAT MAY RESULT FROM THE SHORTAGE OR DAMAGED MATERIALS.

UPON ARRIVAL OF PANELS, FORKLIFTS OR HOISTING EQUIPMENT WILL BE REQUIRED TO UNLOAD AND POSITION THE PANEL BUNDLES AND ACCESSORY CRATES FOR JOBSITE STORAGE AND INSTALLATION.

EXTREME CARE SHOULD BE TAKEN TO AVOID BUMPING THE PANELS WHILE LIFTING AND MANEUVERING. IN ALL CASES PANELS SHOULD NOT DEFLECT SIGNIFICANTLY IN THE LIFTING PROCESS.

IN HANDLING PANELS INDIVIDUALLY, ALL PERSONNEL MUST WEAR THE PROPER CLOTHING, PROTECTIVE EYE WEAR, AND GLOVES.

TO HELP PREVENT DAMAGES TO THE SURFACES AND EDGES:
- ALWAYS LIFT THE PANELS WHEN REMOVING THEM FROM BUNDLES, NEVER DRAG THEM.
- NEVER LIFT THE PANEL FROM THE FLAT POSITION BY THE OVERLAPPING RIB.
- DO NOT CARRY PANELS IN THE FLAT POSITION.

UNLOADING:

PANELS ARE SPIRAL WRAPPED WITH STRETCH-FILM AND SHIPPED FLAT. PANEL BUNDLES ARE REINFORCED AT SPECIFIED LIFTING POINTS TO PREVENT DAMAGE WHEN LIFTING. SEE FIGURE'S 1 AND 2 IN THIS SECTION TO DETERMINE WHERE THE LIFTING POINTS ARE FOR THE PANEL BUNDLES.

UNLOADERS MUST TAKE CARE THAT FORKLIFT FORKS ARE LOCATED AT THE PARTICLE BOARD ON THE PANEL BUNDLES BEFORE LIFTING.

EXTREME CARE SHOULD BE TAKEN TO AVOID BUMPING OR DROPPING THE PANELS WHEN LIFTING AND MANEUVERING.

WHEN UNLOADING BUNDLES OF 36'-0" OR LONGER IN LENGTH, TWO OR MORE LIFTING POINTS MAY BE REQUIRED. OVER ENGAGEMENT OF FORKS WILL CAUSE DAMAGE TO THE MATERIALS LOCATED ON THE OPPOSITE SIDE OF THE BUNDLE BEING LIFTED.

WHEN AN OVERHEAD CRANE IS USED, REINFORCED NYLON SLINGS OR STRAPS SHOULD BE USED (NO CHAINS OR CABLES SHOULD COME IN CONTACT WITH THE PANELS), ALONG WITH SUITABLE STIFF INSERTS LOCATED AT TOP AND BOTTOM OF THE BUNDLES AT THE SLING POSITIONS TO PROTECT THE PANELS FROM DAMAGE. ALSO, PLACE FOAM BLOCKS ON THE SIDES OF BUNDLES AT ALL SLING LOCATIONS.

NOTES:

REINFORCED LIFTING POINTS ARE CLEARLY MARKED ON THE PANEL BUNDLE (SEE FIGURES 1 & 2)

LONG LENGTH PANELS HAVE TWO OR MORE LIFTING POINTS (SEE FIGURE 2).

USE EXTREME CARE TO AVOID BUMPING OR DROPPING THE PANELS WHILE LIFTING AND MANEUVERING.

HOIST THE PANELS TO THE ROOF WITH THE AID OF NYLON SLINGS AND A SPREADER BAR TO PREVENT ANY CHANCE OF BENDING OR BUCKLING THE PANELS.

UNLOADING WITH A FORKLIFT:

- OVER ENGAGEMENT OF FORKS WILL CAUSE DAMAGE TO THE MATERIALS LOCATED ON THE OPPOSITE SIDE OF THE BUNDLE BEING LIFTED
- PANELS SHOULD NOT DEFLECT SIGNIFICANTLY IN THE LIFTING PROCESS.
- ENSURE THE FORKS STRADDLE THE DESIGNATED LIFT POINT.
- LIFT BUNDLES ONE AT A TIME WITH THE FORKLIFT

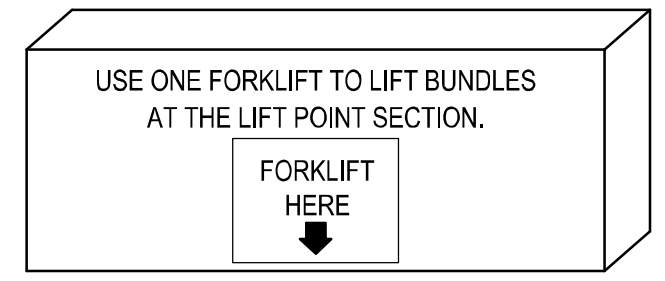

FIGURE 1
STANDARD LENGTH BUNDLES

- BE CAREFUL WHEN UNLOADING OR MOVING LONG LENGTH BUNDLES
- DO NOT POSITION YOUR LIFT AT THE CENTER OF THE BUNDLE, THIS MAY CAUSE PANEL DAMAGE.
- EACH FORKLIFT SHOULD STRADDLE ONE LIFT POINT.

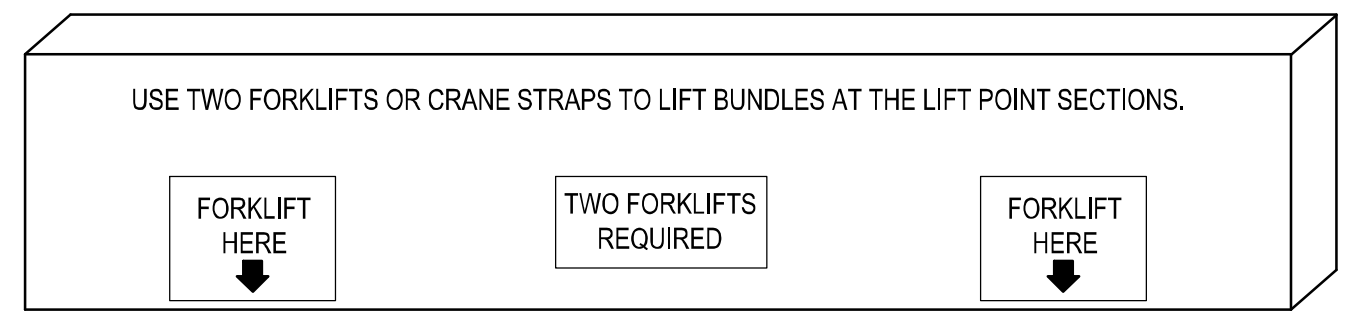

FIGURE 2
LONG LENGTH BUNDLES

UNLOADING WITH AN OVERHEAD CRANE:

- USE NYLON REINFORCED SLINGS OR STRAPS LOCATED AT A MINIMUM OF TWO POINTS ALONG THE LENGTH OF THE BUNDLE FOR CRANE LIFTING OF THE INDIVIDUAL BUNDLES.
- CHAINS OR CABLES SHOULD NOT COME IN CONTACT WITH THE PANELS.
- SUITABLY STIFF INSERTS SHOULD BE LOCATED AT TOP AND BOTTOM OF THE BUNDLES AT THE SLING POSITIONS TO PROTECT THE EDGES OF THE UPPER AND LOWER PANELS.
- PLACE FOAM BLOCKS ON THE SIDES OF BUNDLES AT ALL SLING LOCATIONS.
- WHEN BUNDLES ARE LONGER THAN 15'-0" IT IS SUGGESTED THAT A PROPERLY DESIGNED AND FABRICATED LIFTING BEAM IS USED.

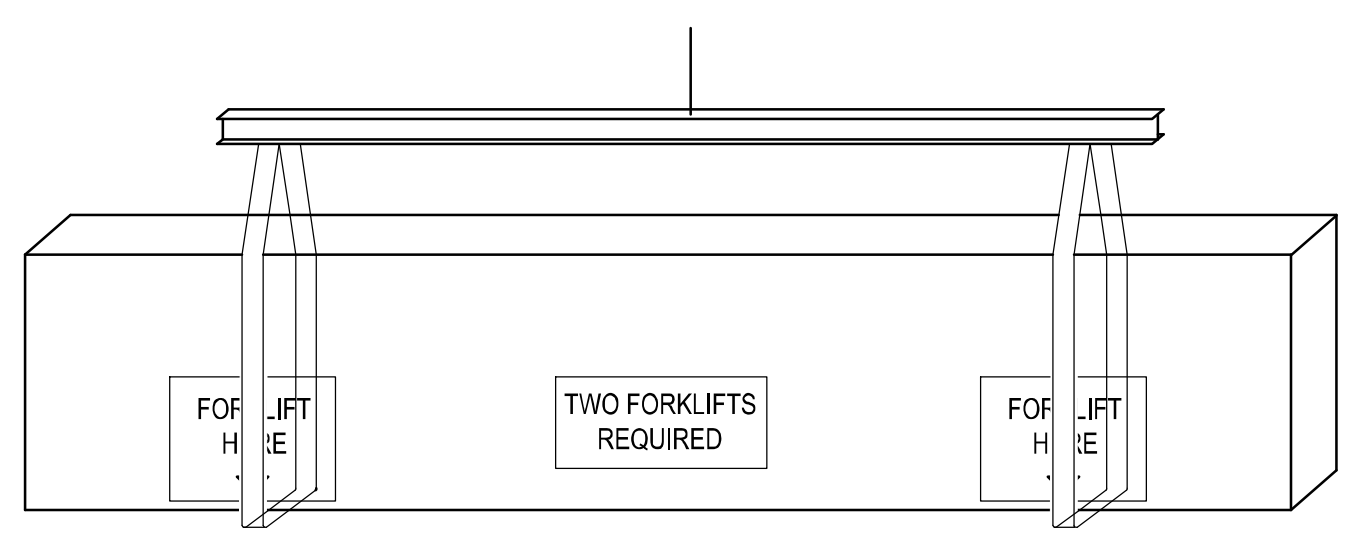

FIGURE 3
BUNDLES UNDER 4,000 LBS AND LESS THAN 44'-0"

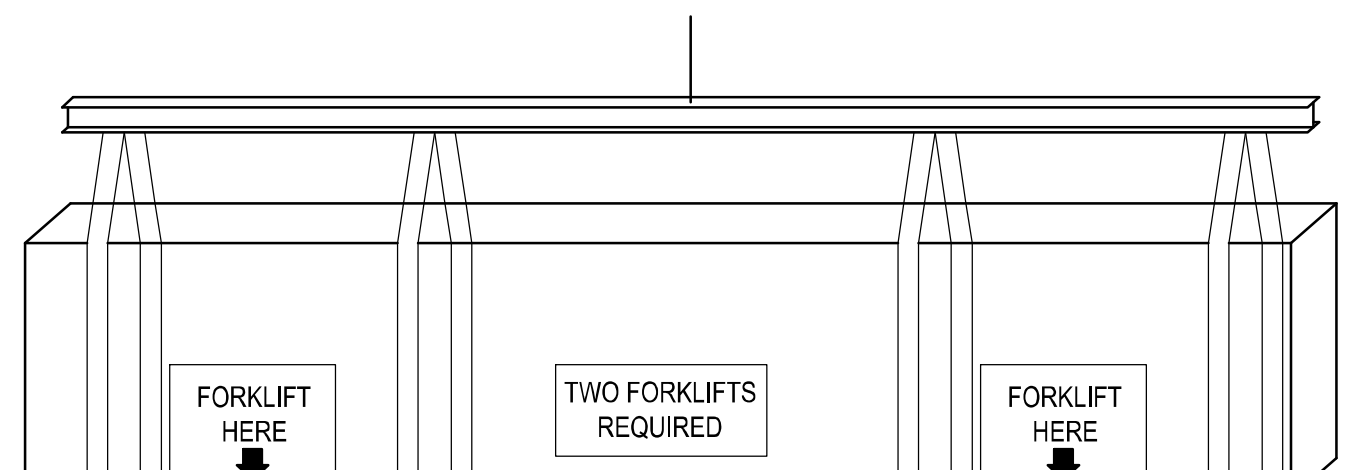

FIGURE 4
BUNDLES OVER 4,000 LBS AND LESS THAN 44'-0"

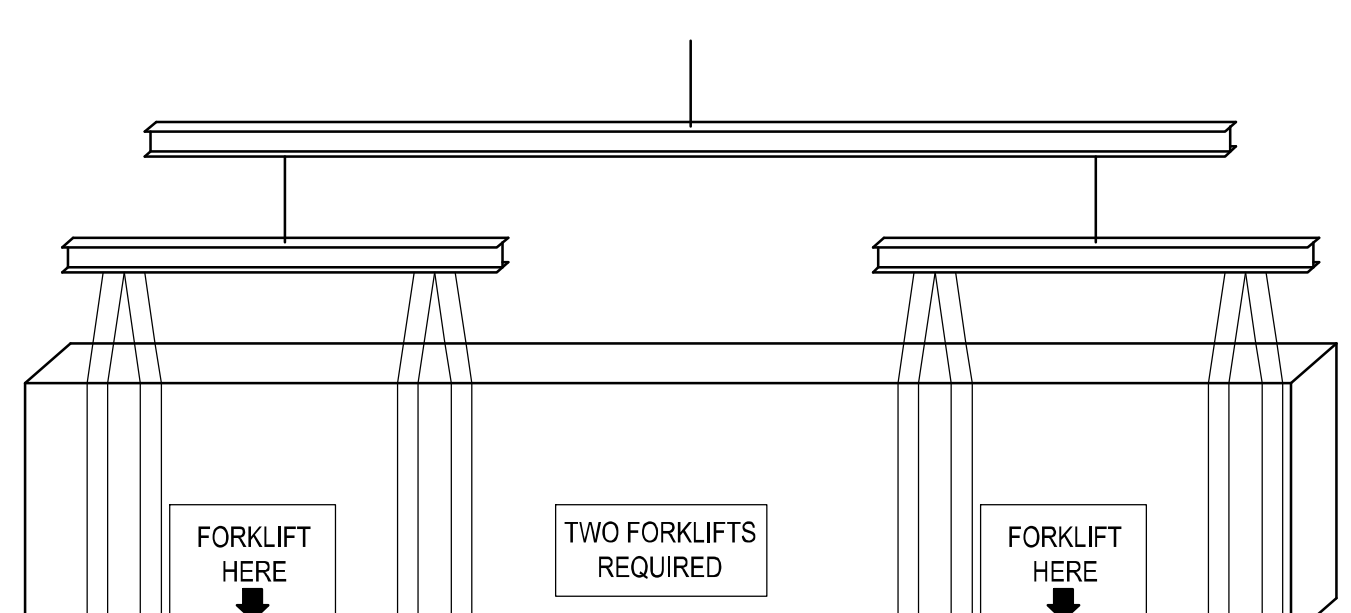

FIGURE 4
BUNDLES OVER 4,000 LBS AND MORE THAN 44'-0"

MANUALLY UNLOADING:

- ON SMALL PROJECTS UNLOADING OF THE PANELS MAY BE CARRIED OUT BY HAND.
  NOTE: SPECIAL CARE SHOULD BE TAKEN WHEN HANDLING. ALWAYS LIFT THE PANELS WHEN REMOVING FROM A BUNDLE, NEVER DRAG THEM.
- WARNING: TO PREVENT JOINT DAMAGE, NEVER LIFT THE PANEL FROM THE FLAT POSITION FROM THE OVERLAPPING RIB. LIFT PANELS FROM THE BOTTOM SKIN.
- IT IS IMPORTANT THAT WHENEVER A PANEL IS HANDLED, PICKED-UP, MOVED OR CARRIED IT SHOULD BE TURNED ON EDGE FIRST. DO NOT CARRY PANEL WHILE FLAT.
- IMPORTANT NOTE: ALL PERSONNEL DOING THESE PROCEDURES MUST WEAR AT ALL TIMES THE PROPER CLOTHING, PROTECTIVE EYE WEAR AND GLOVES.

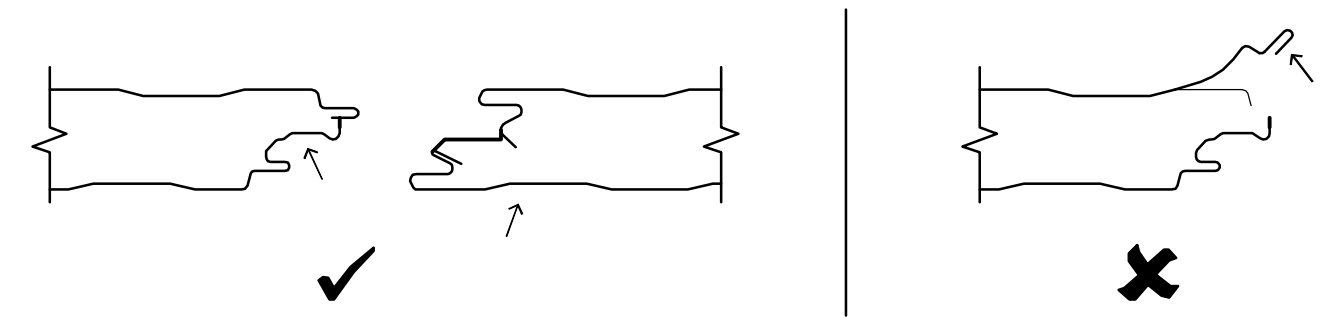

THE METAL BUILDING/PANEL SUPPLIER DOES NOT TAKE ANY RESPONSIBILITY FOR DAMAGE CAUSED FROM MISHANDLING OF PANELS. DAMAGED PANELS SHALL BE REPLACED OR CORRECTED TO APPROVAL OF THE ARCHITECT AND ANY COST INCURRED SHALL BE BORNE BY THE PARTIES RESPONSIBLE FOR THE DAMAGE.

JOBSITE STORAGE:

UPON ACCEPTANCE OF THE SHIPMENT, THE CUSTOMER IS RESPONSIBLE FOR PROPER HANDLING, STORAGE, AND SECURITY OF THE RECEIVED MATERIALS. THE MANUFACTURER IS NOT RESPONSIBLE FOR DAMAGE OR LOSS OF MATERIALS AT THE JOB SITE.

PANELS NOT REQUIRED FOR IMMEDIATE USE SHOULD BE:
- CAREFULLY UNLOAD AND PLACE DIRECTLY IN A PROTECTED STORAGE AREA ON A FIRM, LEVEL SURFACE CLEAR OF DEBRIS, PREFERABLY UNDER WATER PROOF COVER AND SLIT PLASTIC WRAP AT BASE TO ALLOW AIR FLOW, FOR NO LONGER THAN 30 DAYS.
- CUT / SLIT THE BOTTOM OF THE PLASTIC WRAP IN 1'-0" INCREMENTS AT 5'-0" O.C. ALONG THE LENGTH OF THE BUNDLES. A CONTINUOUS CUT / SLIT SHOULD BE MADE ALONG THE WIDTH OF THE BUNDLE.
- ELEVATE WITH WOOD BLOCKING, TO ALLOW AIR CIRCULATION UNDER THE BUNDLE, ON A FIRM, LEVEL SURFACE CLEAR OF DEBRIS, STANDING WATER, DIRECT SUN, AND DRIFTING SNOW.
- SEPARATE FLAT-LAID BUNDLES WITH THE STYRENE DUNNAGE PROVIDED WITH THE SHIPMENT.
- BUNDLES CAN BE STACKED, NO MORE THAN (2) BUNDLES HIGH.
- SLOPE AT A MINIMUM OF **1:12** FOR DRAINAGE OF MOISTURE FROM PANELS.
- INSPECTED DAILY FOR MOISTURE, INSURE NO SAGS ARE PRESENT. TRAPPED MOISTURE CAN DAMAGE THE PANEL FINISH AND VOID APPLICABLE FINISH WARRANTIES. IF PANEL BUNDLES CONTAIN MOISTURE OR SAGS, THE PANEL BUNDLE SHOULD BE DRIED AND RESTACKED. USE CARE IN RESTACKING TO AVOID DAMAGE TO PANELS.

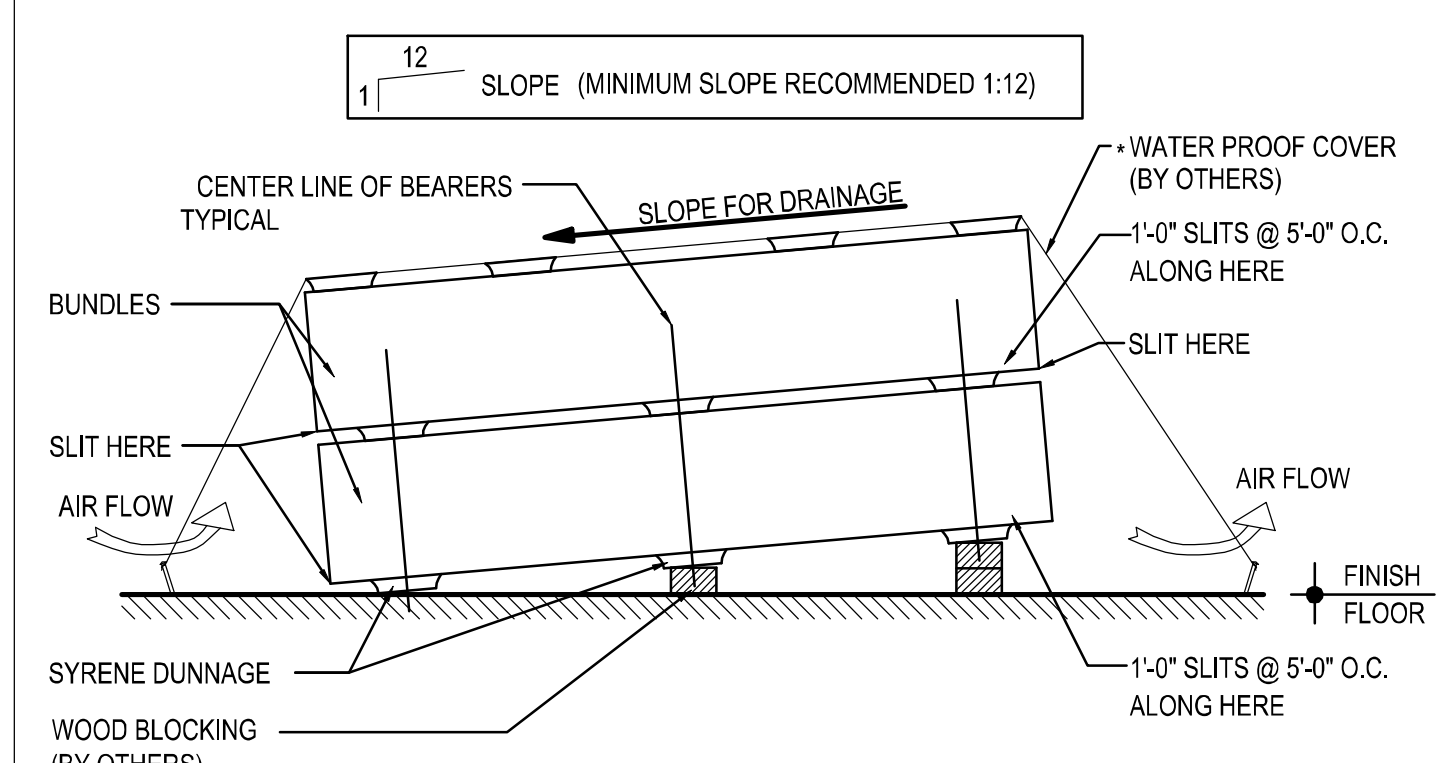

PANELS FOR IMMEDIATE USE:
IF THE PANELS ARE TO BE USED IMMEDIATELY, THE BUNDLES SHOULD BE PLACED AT PRE-PLANNED STRATEGIC LOCATIONS AROUND THE PERIMETER OF THE BUILDING, AS CLOSE AS POSSIBLE TO THE PLANNED WORK AREAS, TO AVOID UNDUE SITE MANEUVERING.

WHEN MOVING PANEL BUNDLES, EXTREME CAUTION SHOULD BE TAKEN TO PREVENT DAMAGE TO THE PANEL SURFACES AND EDGES.

WHEN HANDLING PANELS INDIVIDUALLY, THEY SHOULD BE CARRIED IN A VERTICAL, NOT FLAT POSITION. NEVER DRAG PANELS WHEN REMOVING THEM FROM BUNDLES.

(SEE "HANDLING PANELS AND COMPONENTS)

INSTALLATION TOOLS:

"READ BEFORE YOU START"

- SLIDING PANELS TOGETHER WILL SCUFF, DISCOLOR OR DAMAGE THE FINISH.
- IT IS IMPORTANT TO NOTE THAT, DUE TO THE HIDDEN FASTENER SIDE LAP CONNECTIONS OF THESE PANELS, EXTRA CARE SHOULD BE TAKEN WHEN HANDLING THESE COMPONENTS.
- THE FOLLOWING IS A LIST OF COMMON TOOL REQUIREMENTS. REFER TO "FIELD CUTTING" FOR PANEL CUTTING GUIDELINES.
- WEARING CLEAN GLOVES, HANDLING THE PANELS BY EDGES AND TAKING A LITTLE EXTRA CARE WILL PAY OFF BY PRODUCING A GOOD CLEAN FINISHED WALL.

COMMON TOOL REQUIREMENTS:

CIRCULAR SAW	POWER DRILL	CARPENTER'S SQUARE
RIVET GUN	LEVEL	CHALK LINE
TAPE MEASURE	CAULK GUN	SCREW GUN
POWER SHEARS	HAMMER DRILL	POWER NIBBLER

CAUTION: ANY METAL FILINGS OR BURRS SHOULD BE CLEANED OFF THE FACE OF THE PANELS AS SOON AS POSSIBLE TO PREVENT RUST FROM FORMING ON THE PAINT. (SEE "CLEANING PROCEDURES")

ALIGNMENT & SHIMMING
PRIOR TO INSTALLATION, WALL SECONDARY MEMBERS SHOULD BE CHECKED FOR OVERALL DIMENSIONS AND EVENNESS OF PLANE. THE WALL SECONDARY MEMBERS SHOULD ALSO BE CHECKED TO VERIFY THE WALL SYSTEM CAN BE INSTALLED WITHOUT INTERFERENCE. PRIOR TO INSTALLATION OF INSULATED PANEL, INSPECT EACH WALL FOR COMPONENT ALIGNMENT AND PLANE FLATNESS.

CHECK SUPPORT ALIGNMENT AGAINST THESE TOLERANCES:
< 8'-0" SPACING: +1/8", -0"
≥ 8'-0" SP[ACING: +1/4", -0"

(ARCHITECTURAL FLAT PANELS) < 4'-0" SPACING: +1/16", -0"

MISALIGNED SECONDARY STEEL MAY REQUIRE THE ERECTOR TO SHIM THE INSULATED WALL PANELS AT SOME LOCATIONS. SHIMS AND LABOR FOR INSTALLING SHIMS ARE BY OTHERS.

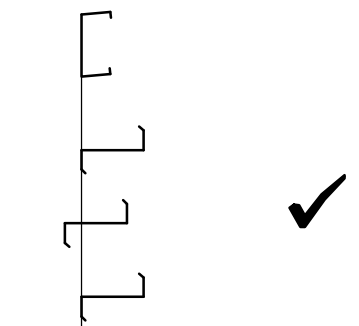

OUTWARD ALIGNMENT WITHIN TOLERANCE = ACCEPTABLE

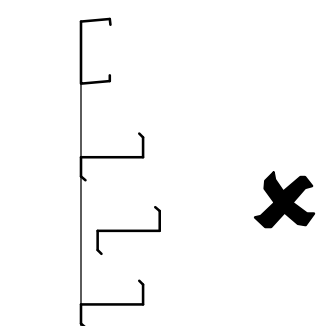

INWARD ALIGNMENT = NOT ACCEPTABLE

FASTENERS:

INSULATED WALL PANEL FASTENERS VARY BASED ON LOCATION AND PANEL THICKNESS. THE FASTENERS LISTED BELOW ARE TYPICAL FASTENERS. ADDITIONAL FASTENERS, WHEN REQUIRED BY DESIGN, WILL BE INDICATED ELSE WHERE ON THE ERECTION DRAWING SET.

43L — SELF-DRILLING SCREW 1/4-14 x 1 1/4" TYPE 2

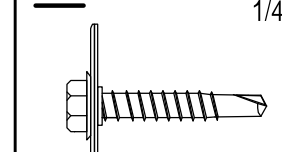

H1030 — SELF-DRILLING SCREW 1/4-14 x 1 1/4" TCP 3 W/ WASHER

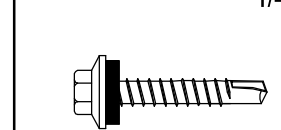

H1050 — SELF-DRILLING SCREW 1/4-14 x 7/8" TCP 1 W/ WASHER

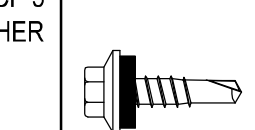

H1100 — 1/8" STAINLESS STEEL BLIND POP RIVET GRIP RANGE: 1/8" - 3/16"

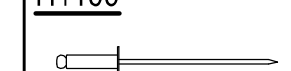

17 — SELF-DRILLING SCREW 12-14 x 1" TCP 3 W/ WASHER

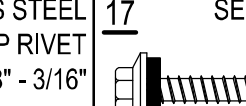

4 — SELF-DRILLING SCREW 1/4-14 x 7/8" TCP 1 W/ WASHER

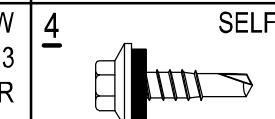

14 — 1/8" STAINLESS STEEL BLIND POP RIVET GRIP RANGE: 1/8" - 3/16"

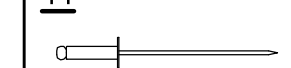

H1220 — SELF-DRILLING SCREW 12-14 x 1" TCP 3 SQUARE / PHILLIPS PANCAKE HEAD

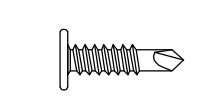

2605ANC — LOCK RIVET, 9/32 BT DOME HEAD W/ WASHER

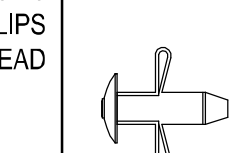

14A — 1/8" STAINLESS STEEL BLIND POP RIVET GRIP RANGE: 5/16" - 3/8"

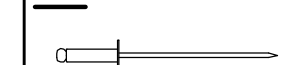

16__PNC / 17__PNC
#14 X _ SDHH (SELF DRILLING HEX HEAD)



STRUCTURAL FASTENING AT PANEL HIDDEN JOINT

PANEL THICK.	HIDDEN FASTENER	(TEK 3) MARK#:	(TEK 5) MARK #:
2"	1/4 - 14 X 2 SDHH W/O WASHER	1616PNC	N/A
2 1/2" & 3"	1/4 - 14 X 3 SDHH W/O WASHER	1624PNC	1724PNC
4"	1/4 - 14 X 4 SDHH W/O WASHER	1632PNC	1732PNC

14__PNC
#14 X _ SDPH SELF DRILLING PANCAKE HEAD



STRUCTURAL FASTENER AT PANEL FACE

PANEL THICK.	THROUGH FASTENER	(TEK 3) MARK#:
2"	#14 X 3 SDPH	1424PNC
2 1/2" & 3"	#14 X 4 SDPH	1432PNC
4"	#14 X 5 SDPH	1440PNC

11__P999
#14 X _ SDHH (SELF DRILLING HEX HEAD)



STRUCTURAL FASTENING FOR THROUGH CONDITIONS

PANEL THICK.	THROUGH FASTENER	(TEK 3) MARK#:
2"	1/4 - 14 X 4 SDHH W/ WASHER	1132P999
2 1/2" & 3"	1/4 - 14 X 5 SDHH W/ WASHER	1140P999
4"	1/4 - 14 X 6 SDHH W/ WASHER	1148P999
5"	1/4 - 14 X 7 SDHH W/ WASHER	1156P999
6"	1/4 - 14 X 8 SDHH W/ WASHER	1164P999

4633GNC
4 HOLE PANEL JOINT WASHER

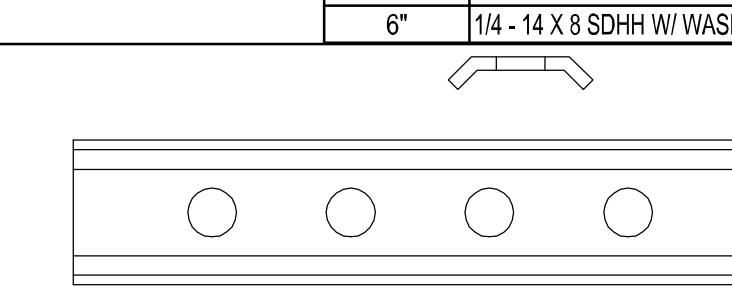

NOTES: THE USE OF A CENTER PUNCH TO SLIGHTLY DIMPLE THE PANEL FACE PRIOR TO INSTALLING THROUGH FASTENERS IS RECOMMENDED TO PREVENT "WALKING" OF THE FASTENERS. EXCESSIVE DAMAGE TO THE PANEL FINISH CAUSED DURING INSTALLATION MAY VOID THE PANEL FINISH WARRANTY.

PROJECT PREPERATION NOTES

INSULATED WALL PANELS
INITIAL GUIDELINES, UNLOADING, HANDLING PANELS & COMPONENTS, JOBSITE STORAGE, & REQ'D TOOLING FOR INSTALLATION

TRIM_21

ISSUE	DWN	CHK	ENG	PE	DATE
CONST. AB PLAN	NBS	EOP	CBM		7/24/2023
BUILDING DEPARTMENT REVIEW	MBS	DAN	CBM		7/31/2023

NUCOR BUILDING SYSTEMS
305 INDUSTRIAL PARKWAY, WATERLOO, IN 46793
PHONE: (260) 837-7891 FAX: (260) 837-7384
PO BOX 1006, 200 WHETSTONE RD, SWANSEA, SC 29160
PHONE: (803) 568-2100 FAX: (803) 568-2121
600 APACHE TRAIL, TERRELL, TX 75160
PHONE: (972) 524-5407 FAX: (972) 524-5417
1050 WATERY LANE, BRIGHAM CITY, UT 84302
PHONE: (435) 919-3100 FAX: (435) 919-3101

PROJECT NAME
WENDOVER FS #13 REPLACEMENT
WENDOVER, NV

CUSTOMER NAME
MICHAEL CLAY CORP
WINNEMUCCA, NV

JOB NUMBER
U23G0555A

SHEET TITLE

PROFESSIONAL ENGINEER - STATE OF NEVADA
RUSSELL R. SKEEM
07/31/2023
Exp. Jun 30, 2024
CIVIL/STRUCTURAL
No. 016713

This seal pertains only to the materials designed and supplied by Nucor Building Systems, a division of Nucor Corporation. The drawings and the metal buildings which they represent are the product of Nucor Building Systems. The register professional engineer whose seal appears on these drawings is employed by Nucor Buildings Systems and does not serve as or represent the project engineer of record and shall not be construed as such.

SHEET
D15 of 20

INSTALLATION PROCEDURES:

NOTE: INSULATED PANELS, DUE TO THEIR JOINERY, DO NOT PROVIDE DIAPHRAGM STIFFNESS FOR THE BUILDING WALL TO RESIST LATERAL FORCES INCLUDING WIND. LATERAL BRACING IS TO BE PROVIDED BY CROSS BRACING SYSTEMS CONNECTED TO THE PRIMARY BUILDING FRAMING.

PRIOR TO PANEL INSTALLATION VERIFY:

BUILDING WALLS ARE PLUMB: INSURE BUILDING WALLS TO BE SHEETED ARE PLUMB AND THAT ANY CROSS-BRACING REQUIRED IS IN PLACE AND SNUG TO PREVENT WALL MOVEMENT DURING PANEL INSTALLATION. ALL SECONDARY MEMBERS ARE IN PLACE AND PLUMB.

SAG BRACING: IF SAG BRACING IS REQUIRED FOR YOUR JOB, THEN IT NEEDS TO BE INSTALLED PRIOR TO PANEL INSTALLATION. INSULATED PANELS ARE NOT DESIGNED TO CARRY THOSE LOADS.

WALL PLANE IS FREE OF OBSTRUCTIONS - SEE "INSTALLATION GUIDELINES"

PANEL LAYOUT - REVIEW CUT DIMENSIONS FOR INSULATED PANELS AT ERECTION DRAWING PANEL LAYOUTS AND BECOME FAMILIAR WITH STARTING AND ENDING PANEL REQUIREMENTS.

WALL OPENING LOCATIONS - LOCATIONS OF OPENINGS MAY NEED TO BE ADJUSTED SLIGHTLY (INCHES) DUE TO PANEL JOINERY. TYPICALLY, PANELS ABOVE AND BELOW OPENINGS ARE TO BE INSTALLED AS WORK PROGRESSES. IF POSSIBLE, KEEP SIDE PANEL JOINTS 6" AWAY FROM FRAMED OPENINGS AS A MINIMUM.

PERSONNEL WALK DOORS – INSTALL PRIOR TO PANEL INSTALLATION. NOTIFY YOUR CUSTOMER SERVICE COORDINATOR IF YOU FIND A POTENTIAL ERECTION PROBLEM.

ONCE ALL OF THE ABOVE ITEMS HAVE BEEN VERIFIED, BEGIN INSTALLATION PROCESS:

1. TO ENSURE A PROPER VAPOR BARRIER AND WATER TIGHTNESS, APPLY A 3\8" BEAD OF BUTYL TUBE CAULK (MK. H3151 TYP.) AT MALE EDGE OF THE PANEL IF CAULK IS NOT PRESENT. ALSO, APPLY A CONTINUOUS 3/8" BEAD OF BUTYL TUBE CAULK RUN AT ALL PERIMETER SUPPORT MEMBERS; BASE, EAVE, HEADER, SILL, AND HORIZONTAL TRANSITIONS. NOTE: THIS CAULK IS NOT REQUIRED AT MID-SPAN (INTERMEDIATE) MEMBERS.
2. OBTAIN FIRST PANEL, STARTING PANEL CUT DIMENSION WILL BE SUPPLIED ON ERECTION DRAWINGS. REFER TO "FIELD CUTTING".
3. PLACE THE FIRST PANEL IN THE LOCATION AS DETAILED ON THE SHEETING DRAWINGS WITH THE BASE OF THE FIRST PANEL IN THE PROPER POSITION, PLUMB THE PANEL AND SECURE IN PLACE.
4. PREPARE ADJACENT PANEL EDGE (VERIFY/ADD BUTYL CAULK, ETC.) PLACE INTO POSITION.
5. MAINTAIN AN EVEN AND UNIFORM GAP AT THE PANEL SIDE JOINT (0.125" MAX), THEN FASTEN PANEL INTO POSITION USING ALL REQUIRED SIDE JOINT FASTENERS. REFER TO "WALL OPENINGS" FOR SPECIFIC INFORMATION AT OPENINGS.
6. REPEAT THE INSTALLATION PROCESS OCCASIONALLY CHECKING FOR PLUMB. IF ANY MINOR 'OUT-OF-PLUMB' IS DETECTED, TAKE CORRECTIVE ACTION IN MINOR STEPS WITH SUBSEQUENT PANELS TO BRING THE SHEETING PROCESS BACK TO PLUMB.

INSTALLATION GUIDELINES:

INSULATED PANELS PROVIDE INSULATION PERFORMANCE SUPERIOR TO CONVENTIONAL METAL WALL PANELS WITH FIELD ASSEMBLED INSULATION SYSTEMS. THE FULL ENERGY SAVINGS POTENTIAL CAN ONLY BE REALIZED WHEN THE INSULATED PANELS ARE INSTALLED WITH CAREFUL ATTENTION TO THE DETAILS AFFECTING THE QUALITY OF AIR AND MOISTURE SEAL.

TO ENSURE A PROPER VAPOR BARRIER AND WATER TIGHTNESS 3/8" BEAD OF BUTYL CAULK IS REQUIRED AT LOCATIONS INDICATED ON THE ERECTION DRAWINGS. SIDELAP CAULK MAY BE FACTORY OR FIELD APPLIED. IT IS HOWEVER, THE INSTALLERS RESPONSIBILITY TO FIELD APPLY CONTINUOUS BUTYL CAULK AT AREAS WITH VOIDS OR MISSING CAULK. CONTINUITY, SIZE AND PROPER BEAD PLACEMENT ARE CRITICAL IN OBTAINING A SATISFACTORY SEAL AT EACH PANEL EDGE. DETAILS FOR PLACEMENT OF CAULK AT PANEL EDGES SHOULD BE REVIEWED IN ADVANCE. APPLICATION OF CAULK SHOULD BE CONTINUOUS.

SPECIAL CARE IN HANDLING IS REQUIRED TO PREVENT DAMAGE OR CONTAMINATION BY FIELD DEBRIS WITHIN THE PANEL SIDE JOINT. ALL SECONDARY SUPPORT STEEL SHOULD BE IN PLACE FOR CONTINUOUS ATTACHMENT OF PANELS ACROSS THE SURFACE OF PRIMARY FRAMING MEMBERS, INCLUDING OUTER EXTREMES OF CORNERS, OPENINGS, GABLES, ETC.

PANEL ENGAGEMENT AT SIDE JOINTS SHOULD BE AS INDICATED ON DETAILS.

PRIOR TO INSTALLATION OF INSULATED PANEL, INSPECT EACH WALL FOR COMPONENT ALIGNMENT AND PLANE FLATNESS. WALL COMPONENTS SHOULD NOT VARY MORE THAT 1/8" OVER THE ENTIRE WALL SURFACE, INCLUDING FASTENER HEADS AND OTHER OBSTRUCTIONS THAT WOULD INTERFERE WITH CONTINUOUS BEARING OF THE INSULATED PANEL LINER FACE.

ALIGNMENT AT TRANSITION AREAS, SUCH AS CORNERS AND EAVE, SHALL BE WITHIN 1/8" OF THE THEORETICAL PLANE TO ACCOMMODATE CORNER PANELS AND FORMED FLASHING.

MISALIGNED SECONDARY STEEL MAY REQUIRE THE ERECTOR TO SHIM THE INSULATED WALL PANELS AT SOME LOCATIONS. SHIMS AND LABOR FOR INSTALLING SHIMS ARE NOT BY NBG.

DO NOT OVERDRIVE FASTENERS: OVERDRIVING FASTENERS CAN CAUSE DAMAGE AND DISTORTION OF THE PANEL FACE.

DO NOT SKIP ATTACHMENTS AT SECONDARY SUPPORT MEMBERS: PANELS MUST BE ATTACHED AT EACH GIRT LINE IN PROGRESSION. SECURING PANELS AT TOP AND BOTTOM ONLY CAN CAUSE PANELS TO BOW AND IT MIGHT BE IMPOSSIBLE FOR THEM TO RETURN TO THEIR NORMAL POSITION.

WEATHER TIGHTNESS REQUIREMENTS

TO PREVENT CONDENSATION ISSUES CARE MUST BE TAKEN BY THE INSULATED PANEL INSTALLER TO ENSURE PROPER SEALING OF THE BUILDING.

NOTE THE FOLLOWING:

- ALL MATERIALS MUST BE INSTALLED AS SHOWN ON THE PROVIDED ERECTION DETAILS.
- ALL PERIMETER CAULKING AND BUTYL SEALANT APPLICATIONS MUST BE INSTALLED AS AS SHOWN ON THE ERECTION DETAILS.
- CONTINUOUS CAULK AND TAPE MASTIC APPLICATIONS (FACTORY OR FIELD) MUST BE CAREFULLY INSPECTED AND ANY VOIDS FOUND MUST BE FIELD APPLIED.
- GAPS, VOIDS OR AIR SPACE CREATED AT PANEL TO PANEL TRANSITIONS; AS AT RAKE, LOW EAVE, RIDGE, HIGH SIDE EAVE, ROOF TO WALL OR CORNERS MUST BE FIELD FILLED WITH FOAM SPRAY IN PLACE INSULATION (BY OTHERS).

NBG WILL NOT BE RESPONSIBLE FOR ANY CONDENSATION ISSUES THAT MAY OCCUR DUE TO IMPROPER INSTALLATION.

IF THE ERECTOR IS NOT EXPERIENCED WITH THE INSULATED PANELS SUPPLIED BY NBG, IT IS STRONGLY RECOMMENDED THAT A FIELD TECHNICIAN BE ON SITE BEFORE BEGINNING PANEL INSTALLATION. PANEL INSTALLATION. CONTACT YOUR PROJECT COORDINATOR TO REQUEST AND SCHEDULE A FIELD TECHNICIAN.

FIELD CUTTING:

SOME FIELD CUTTING OF PANELS AND FLASHING WILL BE REQUIRED. IT IS THE WORKERS RESPONSIBILITY TO MAKE SURE ALL SAFETY PRECAUTIONS ARE FOLLOWED. SOME SAFETY PRECAUTIONS INCLUDE, BUT ARE NOT LIMITED TO; EYE PROTECTION, ADEQUATE VENTILATION, NO SMOKING AND AVOID EXPOSING PANELS TO HIGH HEAT.

PANELS ARE TO BE CUT ONE METAL SIDE AT A TIME AND THE INSULATION CAN BE REMOVED WITH A SERRATED KNIFE. A CIRCULAR SAW WITH AN APPROPRIATE BLADE SET TO CUT THROUGH THE METAL SKIN ONLY CAN BE USED. CIRCULAR SAWS WITH ABRASIVE BLADES ARE NOT ACCEPTABLE. BE SURE TO CUT COMPLETELY THROUGH THE METAL SKIN AT THE PANEL SIDE JOINTS. A CIRCULAR SAW WITH A **PROPER CARBIDE BLADE** MAY BE USED. **CHECK THE SAW BLADE MANUFACTUER'S SPECIFICATIONS FOR PROPER APPLICATION.**

RECOMMENDED CUTTING TOOLS INCLUDE:

(1) CIRCULAR SAW
(2) PANEL NIBBLER
(3) PANEL SAW
(4) SERRATED KNIFE
(5) BLADE OF A CARPENTER'S HAND SAW

IMP CUTTING PROCEDURES:

- MEASURE THE AREA TO CUT & MARK A LINE ON PANEL SURFACE (DO NOT USE GRAPHITE TO MARK PANEL).
- USE ADHESIVE TAPE ON BOTH SIDES OF THE CUTTING LINE TO PROTECT PANEL SURFACE.
- CONFIRM MEASUREMENT, AND PROCEED WITH CUTTING OPERATION.
- ALWAYS PROMPTLY CLEAN PANEL SURFACES TO REMOVE ANY METAL DUST OR FILINGS FROM CUTTING OPERATIONS.
- IF NECESSARY TURN PANEL OVER AND REPEAT STEPS ABOVE ON OPPOSITE SIDE.
- FILE OR SAND OFF ANY BURRS ON THE CUT EDGE OF THE PANEL. THE PANEL WILL THEN BE READY FOR INSTALLMENT. THE INSTALLER MUST CONSIDER THE APPLICATION OF THE CONTINUOUS BEAD OF SEALANT, & IF NECESSARY, THE CUTTING OF THERMAL BREAKS PRIOR TO INSTALLATION; SUCH TASKS SHALL BE DONE ON THE GROUND.
- FIELD-CUT EDGES SHOULD ALWAYS BE COVERED WITH TRIMS.

THE PANEL/BLDG MANUFACTURER **WILL NOT** BE RESPONSIBLE FOR DAMAGE TO PANELS CAUSED BY IMPROPER CUTTING METHODS.

- **NEVER** USE A RECIPROCATING SAW TO CUT INSULATED PANELS. RECIPROCATING SAWS CAN CAUSE STRUCTURAL DAMAGE TO THE INSULATED PANELS BY DELAMINATING THE PANEL FACE METAL FROM THE FOAM CORE MATERIAL.
- **NEVER** USE ANY TYPE OF TORCH TO CUT INSULATED PANEL.
- **NEVER** SUBJECT AN INSULATED PANEL TO THE HEAT OF A TORCH EVEN WHEN CUTTING NEARBY STEEL. HIGH HEAT WILL DAMAGE THE PANEL FINISH AND CAN CAUSE THE FOAM CORE TO PRODUCE FUMES WHICH MAY BE IRRITATING TO SOME INDIVIDUALS.
- **NEVER** BURN REMNANTS, DISPOSE OF INSULATED PANEL REMNANTS BY DEPOSITING IN PROPER GARBAGE FACILITIES.

ACCESSORIES:

- TRIMS LENGTHS SUPPLIED WILL VARY AND MAY REQUIRE SOME FIELD CUTTING.
- TRIM COLOR AVAILABILITY MATCHES PANEL COLOR AVAILABILITY.

TRIM ATTACHMENT:

TRIMS ARE FASTENED WITH BLIND RIVETS OR STITCH SCREWS, PAINTED TO MATCH TRIM COLOR. REFER TO THE ERECTION DETAILS AND THE ERECTION DRAWINGS FOR LOCATIONS AND FASTENING SPACING.

THERMAL WINDOW:

DUE TO THE ISOLATIVE PROPERTIES AND CONNECTION REQUIREMENTS OF THE WALL SYSTEM, THERMAL BREAK WINDOWS ARE RECOMMENDED FOR USE WITH INSULATED WALL PANELS.

SURFACE CLEANING PROCEDURES:

GENERAL:

DIRT, OIL, GREASE, FINGERPRINTS OR ANY OTHER TYPE ON CONTAMINATE MUST BE COMPLETELY REMOVED WHEN INSTALLATION IS COMPLETE IN ORDER TO MAXIMIZE COATING PERFORMANCE.

STEEL FILINGS FROM ADJACENT WORK MAY BECOME EMBEDDED IN THE PAINT SURFACE. THESE FILINGS WILL RUST AND FORM UNSIGHTLY RED SPOTS ON THE PAINTED SURFACE THAT CAN BECOME LARGER THAN THE ORIGINAL FILING. WHEN USING SAWS, DRILLS OR CUTTING DISCS, PROTECT THE PAINTED SURFACED WITH A NON-FLAMMABLE COVER AND REMOVE OR COVER ADJACENT OR NEARBY PANELS IF POSSIBLE.

BRUSH ANY FILINGS OF STEEL OFF THE PAINTED SURFACE. EMBEDDED FILINGS SHOULD BE REMOVED MECHANICALLY. CARE SHOULD BE TAKEN BY WORKMEN TO AVOID STEPPING ON OR EXERTING PRESSURE AGAINST ANY STEEL FILINGS WHICH MAY BECOME EMBEDDED IN THE PAINTED SURFACE.

THINGS TO REMEMBER WHEN CLEANING:

USE ONLY MILD DETERGENTS	(NO LEMON, ALCOHOL OR AMMONIA INGREDIENTS)
USE ONLY SOFT BRISTLE BRUSHES	(NO SCRUB TYPE OR WIRE BRISTLES)
USE ONLY LUKEWARM WATER	(NO HOT WATER)

LIGHT OR PERIODIC CLEANING MAY BE ACCOMPLISHED ON A REGULAR BASIS BY WASHING WITH PLAIN WATER USING A STANDARD GARDEN HOSE OR LOW PRESSURE SPRAYER IS USUALLY SUFFICIENT TO REMOVE MOST CONTAMINATION.

CAULKING COMPOUNDS, OIL, GREASE, TARS, WAX AND SIMILAR SUBSTANCES CAN BE REMOVED BY WIPING WITH A CLOTH SOAKED IN MINERAL SPIRITS. WIPE ONLY CONTAMINATED AREAS AND FOLLOW WITH DETERGENT AND THOROUGHLY CLEAN WITH WATER.

SURFACE REPAIR PROCEDURES:

IF "TOUCH UP" PAINT IS REQUIRED CONTACT YOUR PROJECTS CUSTOMER SERVICE COORDINATOR.

PRECAUTIONS:

PROTECT EYES, FACE, AND HANDS FROM DIRECT CONTACT WITH TOUCH-UP PAINT AND/OR SOLVENTS. PROVIDE GOOD VENTILATION IN WORK AREA. ENFORCE NO SMOKING. REMOVE ALL SOURCES OF IGNITION. THESE COATINGS AND SOLVENTS ARE FLAMMABLE.

1. LIGHTLY SAND OR FEATHER EDGES OF DEEP SCRATCHES USING #400 GRIT SAND PAPER
2. WIPE SCRATCHES AND ADJACENT AREAS USING A LINT FREE CLOTH DAMPENED IN MINERAL SPIRITS.
3. ALLOW AREA TO DRY THOROUGHLY BEFORE APPLYING TOUCH-UP PAINT.
4. SHAKE / STIR PAINT TO MIX THOROUGHLY BEFORE APPLYING.
5. CHECK TOUCH-UP PAINT FOR CORRECT MATCH BEFORE APPLYING.
6. APPLY THIN LAYER OF TOUCH-UP PAINT TO DAMAGED AREA. REPEAT LAYERS AS REQUIRED.

PERIMETER CAULKING:

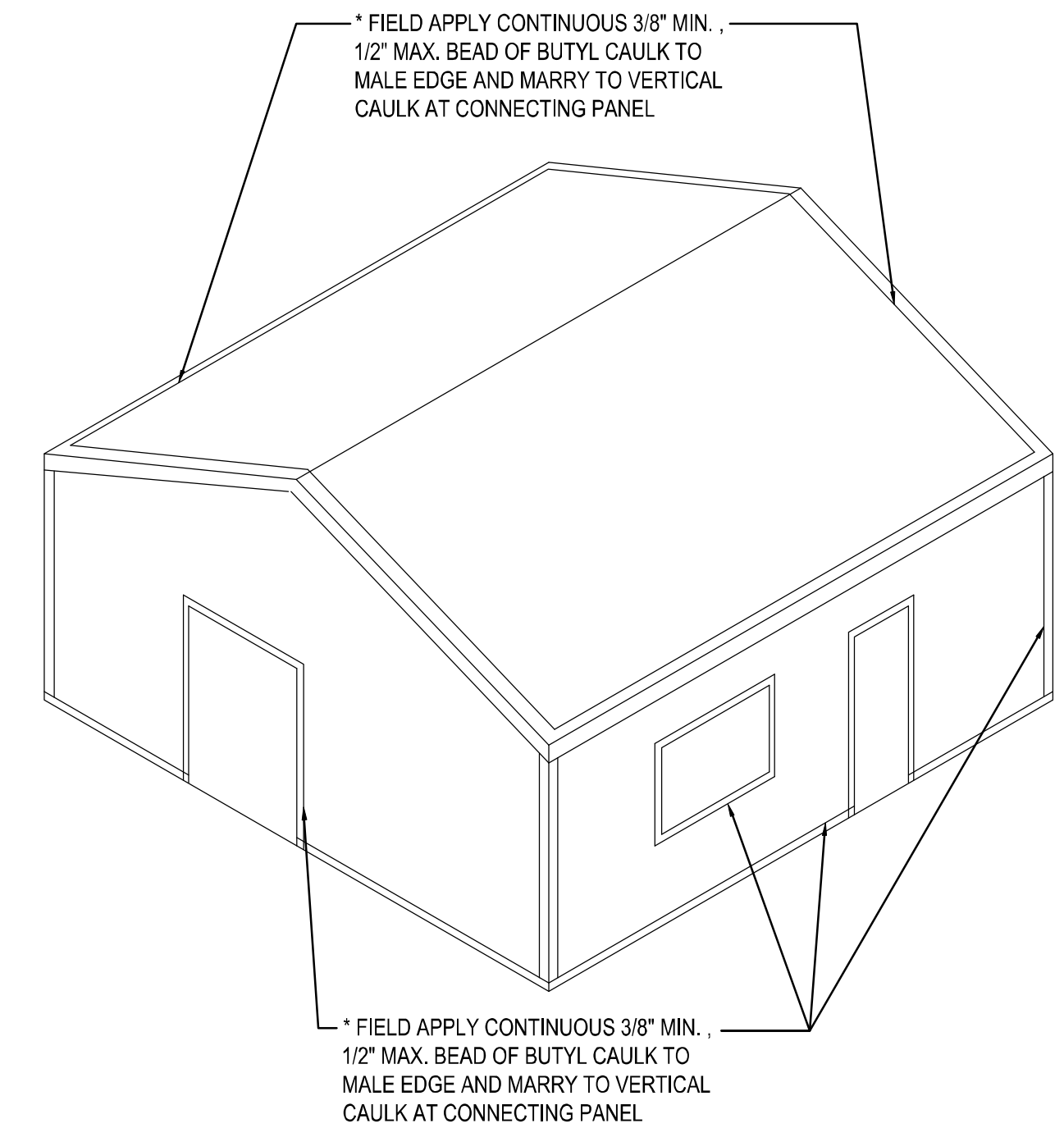

PERIMETER CAULKING IS A CRITICAL PART OF THE PANEL INSTALLATION. NOT INSTALLING THE PERIMETER CAULKING WILL LEAD TO AIR LEAKS, WHICH WILL LEAD TO CONDENSATION AND / OR FROST. REFERENCE THE DETAILS AND THE ERECTION MANUAL FOR PROPER CAULKING PLACEMENT.

FIELD INSTALLED INSULATION NOTE

IT IS THE RESPONSIBILITY OF THE ERECTOR TO FIELD FILL ALL AIR VOIDS WITH INSULATION. UNINSULATED AREAS WILL CAUSE HOT AND COLD SPOTS THAT CAN CAUSE CONDENSATION AND/OR FROST. THESE VOIDS COMMONLY HAPPEN AROUND THE PERIMETER OF THE BUILDING. FAILURE TO DO SO WILL CAUSE FUTURE PROBLEMS.

PROJECT INSTALLATION NOTES AND GUIDELINES

INSULATED WALL PANEL
INSTALLATION PROCEDURES & GUIDELINES,WEATHER TIGHTNESS REQUIREMENTS, FIELD CUTTING & ACCESSORY INFO,& SURFACE, CLEANING/REPAIR INFORMATION.

TRIM_22

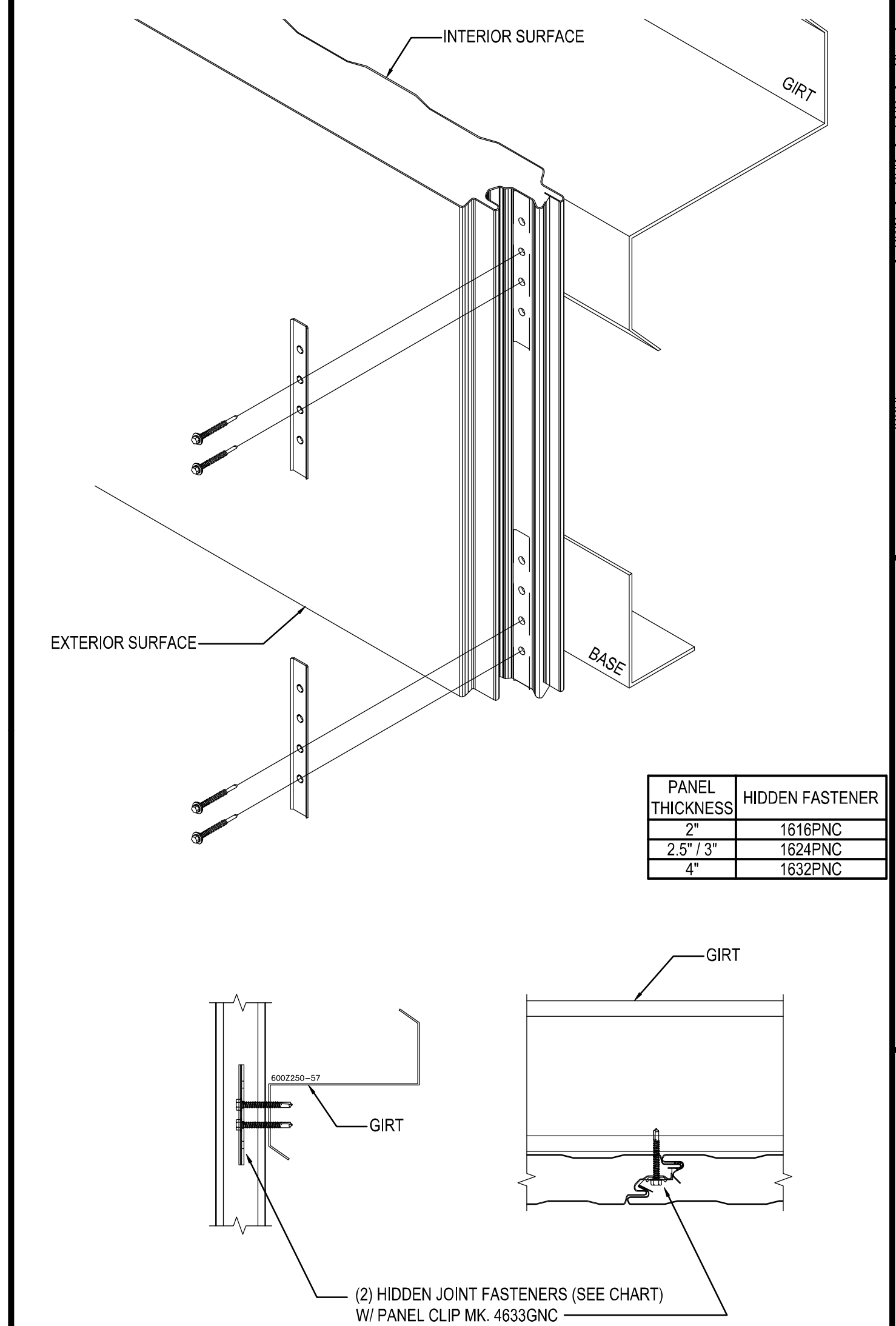

PANEL THICKNESS	HIDDEN FASTENER
2"	1616PNC
2.5" / 3"	1624PNC
4"	1632PNC

PANEL ATTACHMENT DETAIL

WALL PANEL ATTACHMENT AT COLD FORM SECONDARY

TRIM_23

ISSUE	DWN	CHK	ENG	PE	DATE
CONST. AB PLAN	NBS	EOP	CBM		7/24/2023
BUILDING DEPARTMENT REVIEW	MBS	DAN	CBM		7/31/2023

NUCOR BUILDING SYSTEMS
305 INDUSTRIAL PARKWAY, WATERLOO, IN 46793
PHONE: (260) 837-7891 FAX: (260) 837-7384
PO BOX 1006, 200 WHETSTONE RD, SWANSEA, SC 29160
PHONE: (803) 568-2100 FAX: (803) 568-2121
600 APACHE TRAIL, TERRELL, TX 75160
PHONE: (972) 524-5407 FAX: (972) 524-5417
1050 WATERY LANE, BRIGHAM CITY, UT 84302
PHONE: (435) 919-3100 FAX: (435) 919-3101

PROJECT NAME
WENDOVER FS #13 REPLACEMENT
WENDOVER, NV

CUSTOMER NAME
MICHAEL CLAY CORP
WINNEMUCCA, NV

JOB NUMBER
U23G0555A

SHEET TITLE

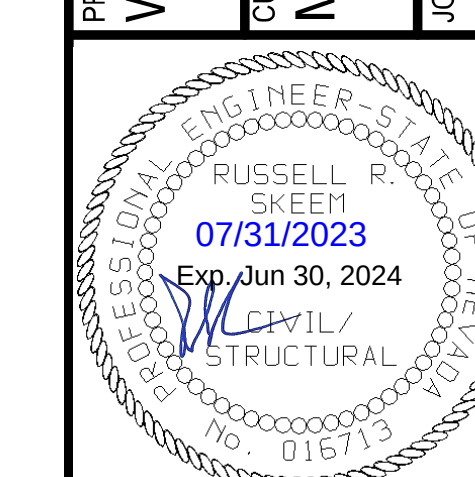

This seal pertains only to the materials designed and supplied by Nucor Building Systems, a division of Nucor Corporation. The drawings and the metal buildings which they represent are the product of Nucor Building Systems. The register professional engineer whose seal appears on these drawings is employed by Nucor Buildings Systems and does not serve as or represent the project engineer of record and shall not be construed as such.

SHEET
D16 of 20

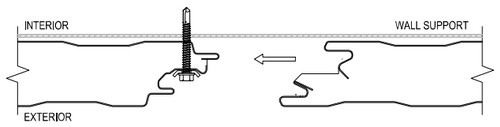

CLIP AND FASTENER ASSEMBLY

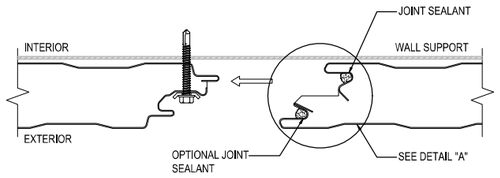

JOINT SEALANT APPLICATION

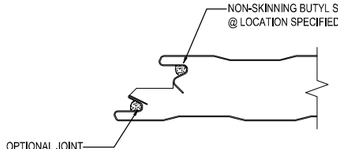

DETAIL A

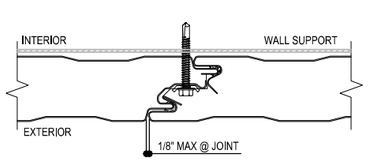

PANEL JOINT DETAIL

WALL PANEL JOINT

TRIM_24

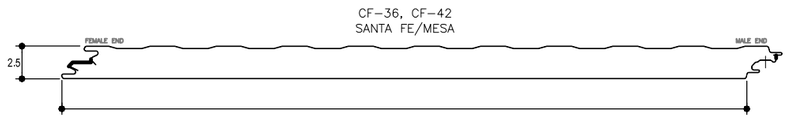

PANEL TYPE	SANTA FE	
CORE MATERIAL	POLYURETHANE	
CORE THICKNESS	2.5"	
	EXTERIOR FACE	INTERIOR FACE
GAUGE	24	26
MATERIAL	G-90 GALV. STEEL	G-90 GALV. STEEL
FINISH	PVDF	POLYESTER
COLOR	DESERT SAND/SURREY BEIGE	IGLOO WHITE
PATTERN	EMBOSSED	EMBOSSED

TRIM_25

PANEL THICKNESS	HIDDEN FASTENER
2"	1616PNC
2.5" / 3"	1624PNC
4"	1632PNC

ERECTOR NOTE:
SEE CORRESPONDING ROOF SHEETING DETAIL FOR ROOF PANEL & TRIM INFORMATION.

FIELD CUT WALL PANELS ALONG ROOF LINE AS REQUIRED

APPLY A CONTINUOUS BEAD OF BUTYL CAULK MK. H3151 AROUND THE PERIMETER SUPPORT MEMBERS AND THEN MARRY HORIZONTAL CAULK TO PANEL CAULK

ROOF ANGLE MAR01 W/ (1) PANCAKE FASTENER MK. 12A AT EACH SUPPORT

(2) HIDDEN JOINT FASTENERS (SEE CHART) W/ PANEL CLIP MK. 4633GNC

IELD OR FACTORY APPLIED BUTYL CAULK
T VERTICAL JOINT (CONTINUOUS 3/8" BEAD)

PURLIN

INSULATED WALL PANEL AT RAKE

INSULATED WALL PANELS

TRIM_27

NOTE: UNLESS BUILDING PANEL LAYOUT PROHIBITS, THE ENDWALL PANELS WILL EXTEND PAST THE CORNER STEEL / GIRT LINE BY THE THICKNESS OF THE SIDEWALL PANELS.THIS IS TO ALLOW FOR A FULLY CLOSED CORNER.

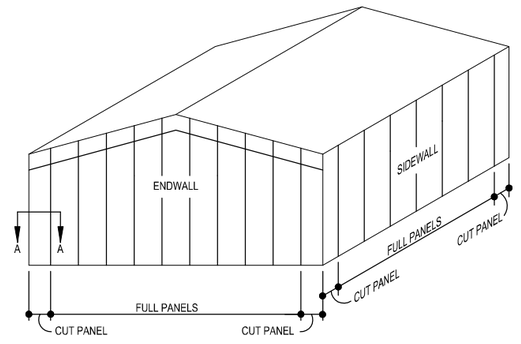

OTHER THREE CORNERS ARE SIMILAR

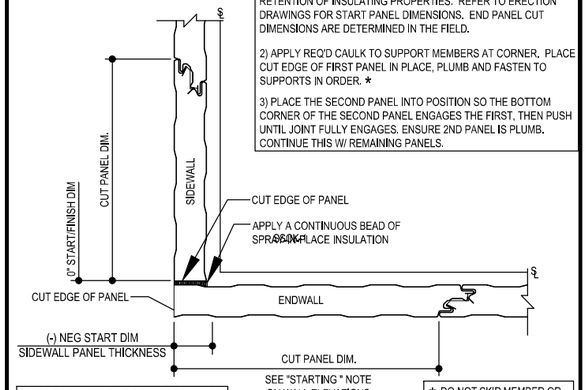

PANEL INSTALLATION GUIDELINE STEPS:

1) FIELD CUT CORNER PANELS TO CREATE A CLOSED CORNER FOR RETENTION OF INSULATING PROPERTIES. REFER TO ERECTION DRAWINGS FOR START PANEL DIMENSIONS. END PANEL CUT DIMENSIONS ARE DETERMINED IN THE FIELD.

2) APPLY REQ'D CAULK TO SUPPORT MEMBERS AT CORNER. PLACE CUT EDGE OF FIRST PANEL IN PLACE, PLUMB AND FASTEN TO SUPPORTS IN ORDER. *

3) PLACE THE SECOND PANEL INTO POSITION SO THE BOTTOM CORNER OF THE SECOND PANEL ENGAGES THE FIRST, THEN PUSH UNTIL JOINT FULLY ENGAGES. ENSURE 2ND PANEL IS PLUMB. CONTINUE THIS W/ REMAINING PANELS.

REFER TO PANEL JOINT CONNECTION AND CORNER CONNECTION DETAILS FOR PANEL ATTACHMENT INFORMATION

SECTION AA

* DO NOT SKIP MEMBER OR ATTACH PANEL AT TOP THEN BOTTOM. BOWING OF PANELS MAY OCCUR IF THIS IS DONE.

WALL CORNER LAYOUT

TRIM_28

PANEL THICKNESS	HIDDEN FASTENER
2"	1616PNC
2.5" / 3"	1624PNC
4"	1632PNC

ERECTOR NOTE:
SEE CORRESPONDING ROOF SHEETING DETAIL FOR ROOF PANEL & TRIM INFORMATION.
SEE ALSO FOR TOP OF PANEL PLACEMENT

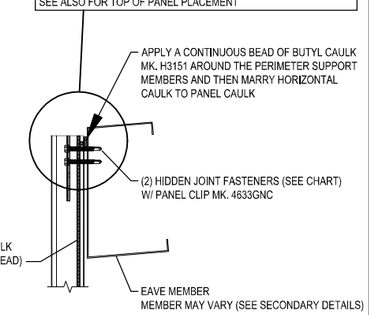

INSULATED WALL PANEL AT LOW EAVE

INSULATED WALL PANELS

TRIM_26

PANEL THICKNESS	HIDDEN FASTENER
2"	1616PNC
2.5" / 3"	1624PNC
4"	1632PNC

OVERALL "GAP" BETWEEN PANELS
2" / 2.5" WALL PANELS = 7/16"
3" WALL PANELS = 1/2"
4" WALL PANELS = 5/8"

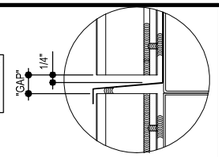

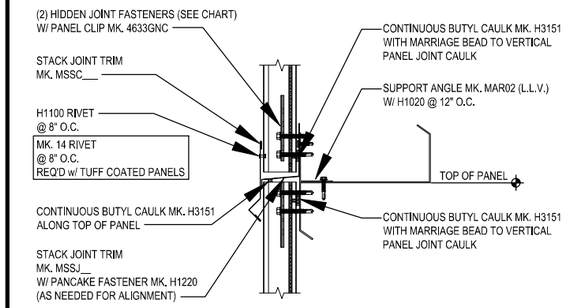

STACKED JOINT

INSULATED WALL PANEL STACK JOINT TRIM

TRIM_29

ISSUE	DWN	CHK	LEAD ENG	PE	DATE
CONST. AB PLAN	NBS	EOP	CBM		7/24/2023
BUILDING DEPARTMENT REVIEW	WBS	DAN	CBM		7/31/2023

NUCOR BUILDING SYSTEMS
300 INDUSTRIAL PARKWAY, WATERLOO, IN 46793
PHONE: (260) 837-7891 FAX: (260) 837-7384
PO BOX 1006, 200 WHETSTONE RD, SWANSEA, SC 29160
PHONE: (803) 568-2100 FAX: (803) 568-2121
600 APACHE TRAIL, TERRELL, TX 75160
PHONE: (972) 524-9411 FAX: (972) 524-9417
1050 WATERY LANE, BRIGHAM CITY, UT 84302
PHONE: (435) 919-3100 FAX: (435) 919-3101

PROJECT NAME: WENDOVER FS #13 REPLACEMENT
WENDOVER, NV

CUSTOMER NAME: MICHAEL CLAY CORP
WINNEMUCCA, NV

JOB NUMBER: U23G0555A

SHEET TITLE

RUSSELL R. SKEEM
PROFESSIONAL ENGINEER - STATE OF UTAH
07/31/2023
Exp. Jun 30, 2024
CIVIL/STRUCTURAL
NO. 015713

This set of plans and/or specifications is the property of Nucor Building Systems, a division of Nucor Corporation. The drawings and the information shown thereon are the result of Nucor Building Systems' engineering efforts. Any use of these drawings is employed by Nucor Buildings Systems and does not serve as a representation of any kind on record and shall not be construed as such.

SHEET
D17 of 20

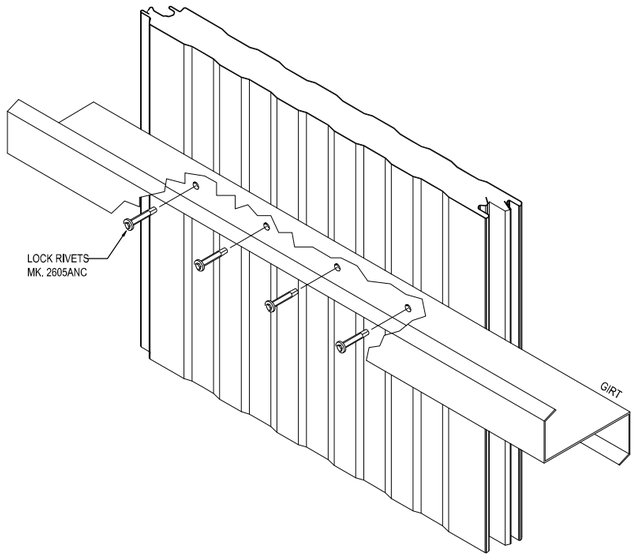

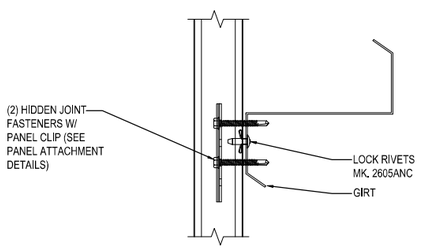

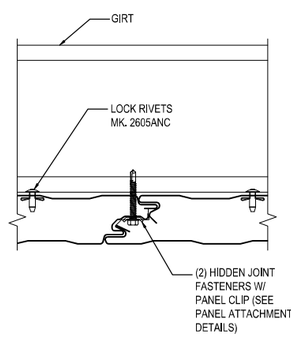

BACK FASTENING DETAILS

WALL PANEL BACK FASTENING AT COLD FORM SECONDARY

TRIM_30

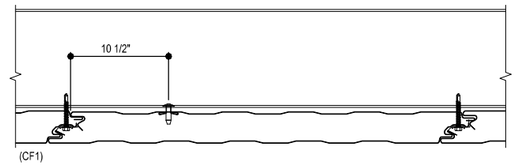

COLD FORM FASTENING PATTERN 1
SIDE JOINT FASTENING AND (1) LOCK RIVET MK. 2605ANC

INSTALL LOCK RIVETS THROUGH GIRT
FLANGE INTO MESA WHERE THE SKIN
MAKES CONTACT WITH THE STEEL

CF1

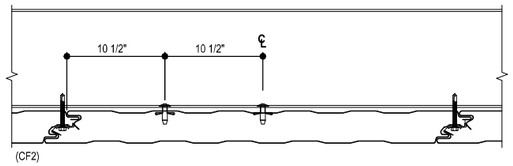

COLD FORM FASTENING PATTERN 2
SIDE JOINT FASTENING AND (2) LOCK RIVETS MK. 2605ANC

INSTALL LOCK RIVETS THROUGH GIRT
FLANGE INTO MESA WHERE THE SKIN
MAKES CONTACT WITH THE STEEL

CF2

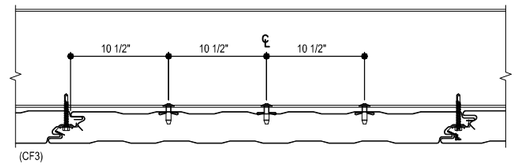

COLD FORM FASTENING PATTERN 3
SIDE JOINT FASTENING WITH (3) LOCK RIVETS MK. 2605ANC

INSTALL LOCK RIVETS THROUGH GIRT
FLANGE INTO MESA WHERE THE SKIN
MAKES CONTACT WITH THE STEEL

CF3

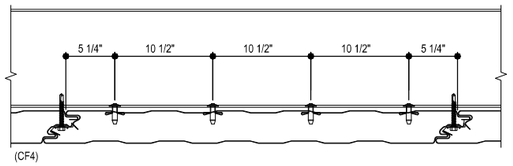

COLD FORM FASTENING PATTERN 4
SIDE JOINT FASTENING AND BACK FASTENING WITH (4) LOCK RIVETS MK. 2605ANC

INSTALL LOCK RIVETS THROUGH GIRT
FLANGE INTO MESA WHERE THE SKIN
MAKES CONTACT WITH THE STEEL

CF4

COLD FORM BACK FASTENING PATTERNS

INSULATED METAL PANEL BACK FASTENING PATTERNS

TRIM_31

ISSUE	DWN	CHK	ENG	PE	DATE
CONST. AB PLAN	NBS	EOP	CBM		7/24/2023
BUILDING DEPARTMENT REVIEW	WBS	DAN	CBM		7/31/2023

NUCOR BUILDING SYSTEMS
300 INDUSTRIAL PARKWAY, WATERLOO, IN 46793
PHONE: (260) 837-7891 FAX: (260) 837-7384
PO BOX 1006, 200 WHETSTONE RD, SWANSEA, SC 29160
PHONE: (803) 568-2100 FAX: (803) 568-2121
600 APACHE TRAIL, TERRELL, TX 75160
PHONE: (972) 551-4400 FAX: (972) 551-4417
1050 WATERY LANE, BRIGHAM CITY, UT 84302
PHONE: (435) 919-3100 FAX: (435) 919-3101

PROJECT NAME
WENDOVER FS #13 REPLACEMENT
WENDOVER, NV

CUSTOMER NAME
MICHAEL CLAY CORP
WINNEMUCCA, NV

JOB NUMBER
U23G0555A

SHEET TITLE



This seal pertains only to the materials
prepared by Nucor Corporation, Nucor
Building Systems, a division of Nucor
Corporation. The drawings and the
design shown thereon and contained
are the product of Nucor Building
Systems' engineering staff. Nucor Building
Systems is a registered professional
engineering firm. Any reuse of these
drawings is employed by Nucor
Buildings Systems and does not serve
as a representation by the preparer of
record and shall not be construed
as such.

SHEET
D18 of 20

PANEL THICKNESS	HIDDEN FASTENER
2"	1616PNC
2.5" / 3"	1624PNC
4"	1632PNC

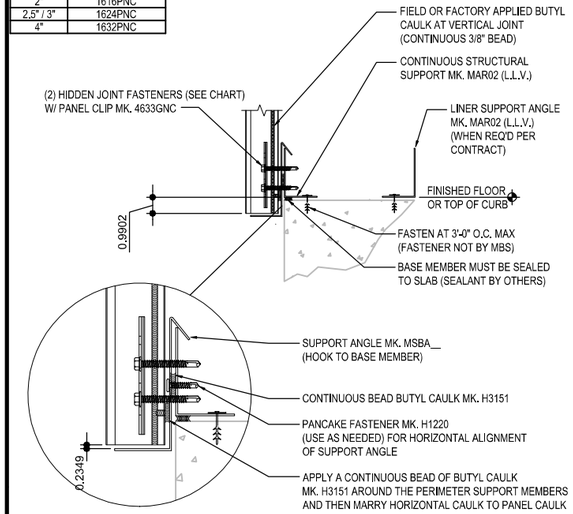

PANEL THICKNESS	BASE TRIM
2"	F5076
2.5"	F5077
3"	F5079
4"	F5080

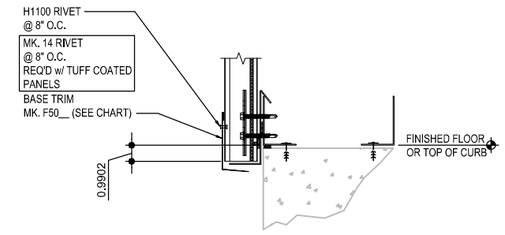

BASE TRIM DETAIL

BASE TRIM WITH BASE ANGLE

TRIM_32

PRIOR TO PANEL ATTACHMENT, COMBINE SUPPORT ANGLE AND INSIDE CORNER TRIM.

THEN ATTACH THE COMBINED PARTS TO THE SECONDARY MEMBERS AT STEEL LINE

PANEL THICKNESS	OUTSIDE TRIM
2"	F5102
2.5"	F5103
3"	F5104
4"	F5101

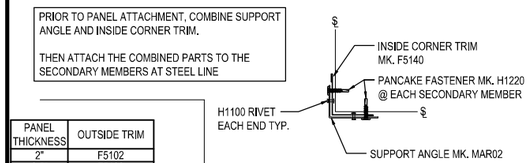

PANEL THICKNESS	THROUGH FASTENER
2"	1424PNC
2.5" / 3"	1432PNC
4"	1440PNC
PRE-DRILL REQUIRED AT HOT-ROLLED SECONDARY	

OUTSIDE CORNER

INSULATED METAL PANEL OUTSIDE CORNER

TRIM_33

ERECTOR NOTE:
4" (MINIMUM) DISTANCE FROM EDGE OF FIELD-CUT PANEL TO JAMB.

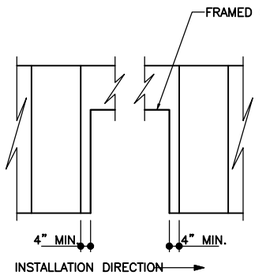

MINIMUM PANEL WIDTH AT F.O. JAMB

(ELEVATION VIEW)

TRIM_34

PANEL THICKNESS	THROUGH FASTENER
2"	1424PNC
2.5" / 3"	1432PNC
4"	1440PNC

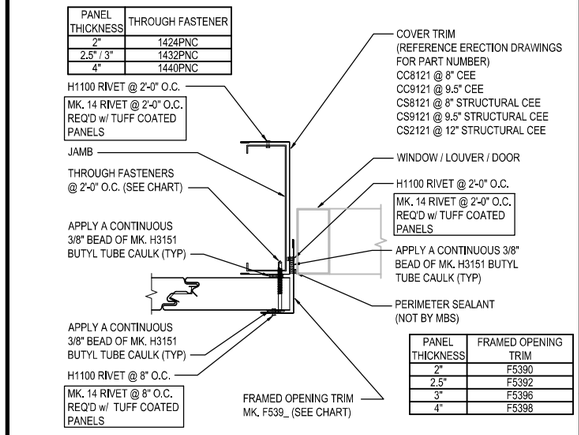

PANEL THICKNESS	FRAMED OPENING TRIM
2"	F5390
2.5"	F5392
3"	F5396
4"	F5398

JAMB TRIM

INSULATED METAL PANEL JAMB TRIM AT COLD FORMED FRAMED OPENING

TRIM_35

PRIOR TO PANEL ATTACHMENT, INSTALL COVER TRIM AND FRAMED OPENING TRIM

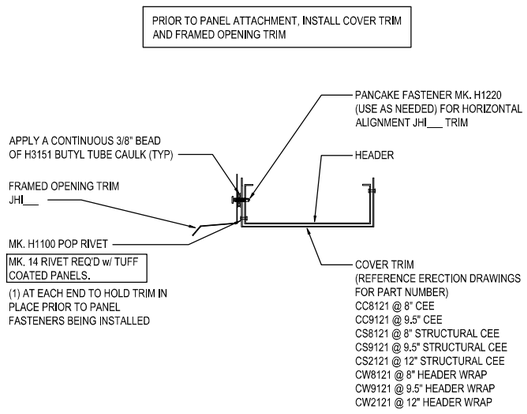

SIDE JOINT OF PANEL

PANEL THICKNESS	HIDDEN FASTENER
2"	1616PNC
2.5" / 3"	1624PNC
4"	1632PNC

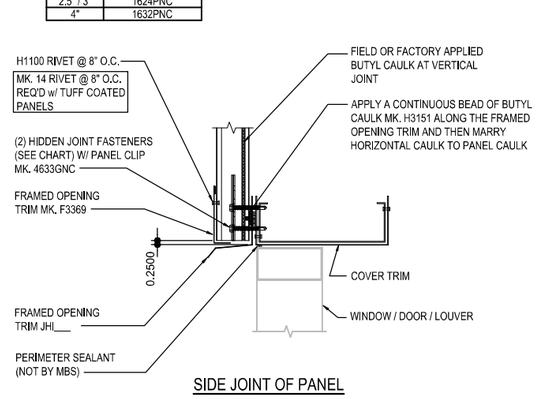

SIDE JOINT OF PANEL

PANEL THICKNESS	THROUGH FASTENER
2"	1424PNC
2.5" / 3"	1432PNC
4"	1440PNC

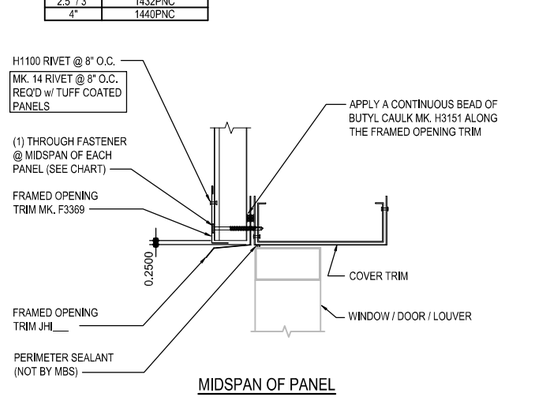

MIDSPAN OF PANEL

HEAD TRIM WITH COLD FORM HEADER

INSULATED WALL PANEL FRAMED OPENING HEADER TRIM

TRIM_36

PRIOR TO PANEL ATTACHMENT, INSTALL COVER TRIM

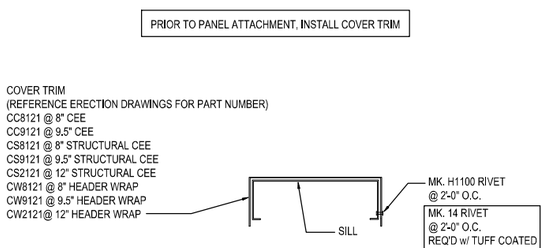

PANEL THICKNESS	HIDDEN FASTENER
2"	1616PNC
2.5" / 3"	1624PNC
4"	1632PNC

PANEL THICKNESS	THROUGH FASTENER
2"	1424PNC
2.5" / 3"	1432PNC
4"	1440PNC

PANEL THICKNESS	SILL TRIM
2"	F5501
2.5"	F5503
3"	F5507
4"	F5509

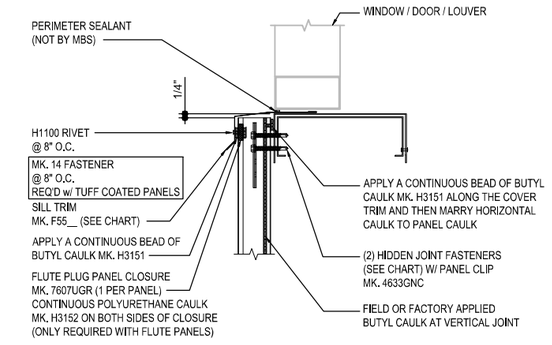

SIDE JOINT OF PANEL

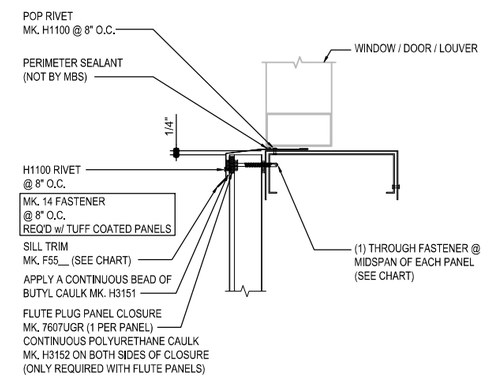

MIDSPAN OF PANEL

SILL TRIM

INSULATED WALL PANEL FRAMED OPENING SILL TRIM

TRIM_37

ISSUE	DWN	CHK	ENG	PE	DATE
CONST. AB PLAN	NBS	EOP	CBM		7/24/2023
BUILDING DEPARTMENT REVIEW	MBS	DAN	CBM		7/31/2023

NUCOR BUILDING SYSTEMS
300 INDUSTRIAL PARKWAY, WATERLOO, IN 46793
PHONE: (260) 837-7891 FAX: (260) 837-7384
PO BOX 1006, 200 WHETSTONE RD, SWANSEA, SC 29160
PHONE: (803) 568-2100 FAX: (803) 568-2121
600 APACHE TRAIL, TERRELL, TX 75160
PHONE: (972) 524-4100 FAX: (972) 524-4147
1050 WATERY LANE, BRIGHAM CITY, UT 84302
PHONE: (435) 919-3100 FAX: (435) 919-3101

PROJECT NAME: WENDOVER FS #13 REPLACEMENT
WENDOVER, NV

CUSTOMER NAME: MICHAEL CLAY CORP
WINNEMUCCA, NV

JOB NUMBER: U23G0555A

SHEET TITLE

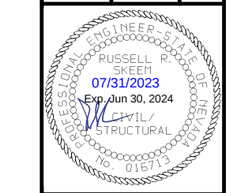

This seal pertains only to the materials and engineering furnished by Nucor Building Systems, a division of Nucor Corporation. The drawings and the engineering contained therein are the product of Nucor Building Systems and the engineer whose seal appears hereon. Nucor Building Systems is not responsible for alterations made to these drawings is employed by Nucor Building Systems and does not serve as a record document unless signed as a record and shall not be construed as such.

SHEET: D19 of 20

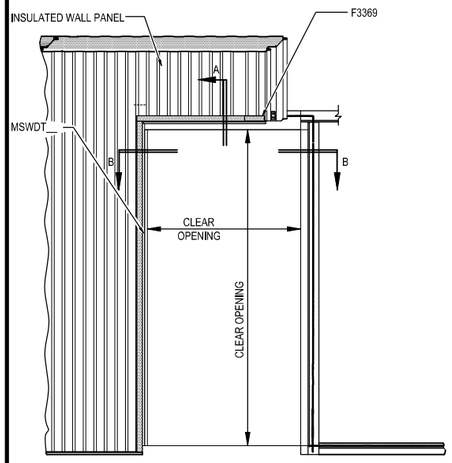

DOOR TRIM ELEVATION

ERECTOR NOTES:
1. THE USE OF A CENTER PUNCH TO SLIGHTLY DIMPLE THE PANEL FACE PRIOR TO INSTALLING THE THROUGH FASTENERS IS RECOMMENDED TO PREVENT "WALKING" OF THE FASTENERS. EXCESIVE DAMAGE OF THE PANEL FINISH CAUSED DURING INSTALLATION MAY VOID THE PANEL FINISH WARRANTY.
2. • ENSURE CAULK IS CONTINUOUS, IF NO CAULK IS PRESENT OR IF CAULK IS NOT CONTINUOUS. FIELD APPLY CONTINUOUS CAULK MK# H3151.
3. FIELD MITERING OF FRAMED OPENING TRIM(S) WILL BE REQUIRED BY THE ERECTOR. FIELD CAULK TRIMS TO ENSURE WEATHER TIGHTNESS AS REQUIRED.

FASTENER CHART

PANEL THICKNESS	THROUGH FASTENER	HIDDEN FASTENER
2"	1424PNC	1616PNC
2 1/2" / 3"	1432PNC	1624PNC
4"	1440PNC	1632PNC

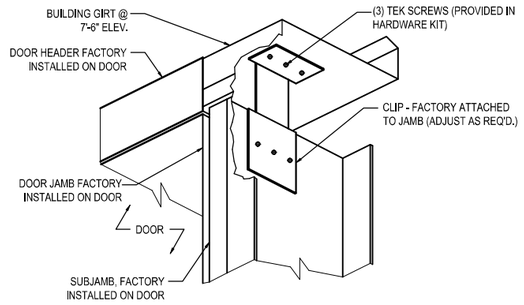

DOOR FRAME INSTALLATION AT TOP

STAND FRAME & ADJUST CLIP AT JAMB AS REQUIRED

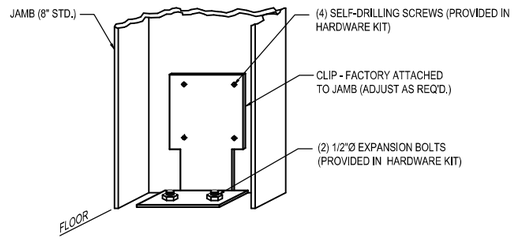

DOOR FRAME INSTALLATION AT BASE

STAND FRAME & ADJUST CLIP AT JAMB AS REQ'D. ATTACH CLIP TO GIRT W/ (3) SELF-DRILLING SCREWS

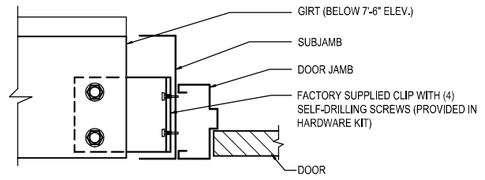

GIRT TO SUBJAMB DETAIL

USE (2) 1/2" X 1 1/4" A307 BOLTS H0500/NUTS H0400
FIELD CUT GIRT TO LENGTH AS REQUIRED
FIELD WORK HOLES IN GIRT TO ACCEPT CLIP AS REQUIRED
REFERENCE STANDARD WASHER DETAIL FOR TYPICAL WASHER REQUIREMENTS

HEAD TRIM @ MID-POINT OF PANEL
SECTION - A

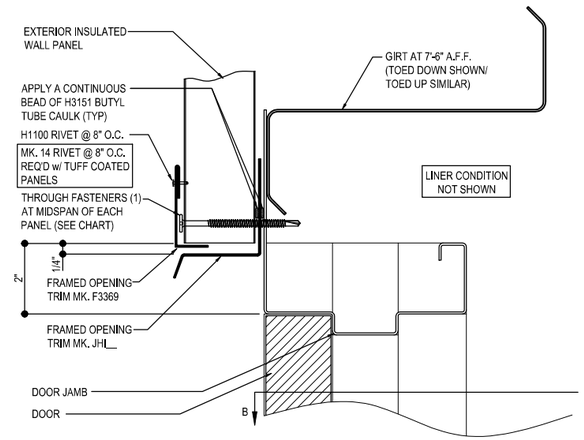

HEAD TRIM @ SIDE JOINT OF PANEL
SECTION - A

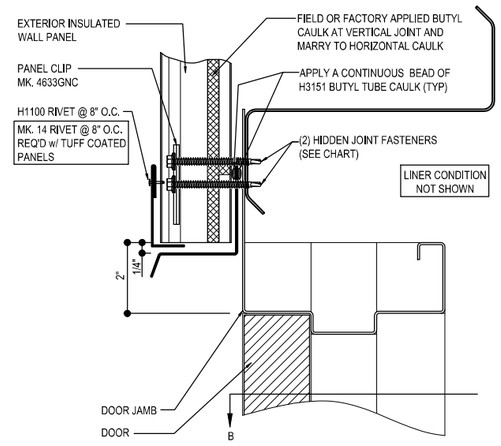

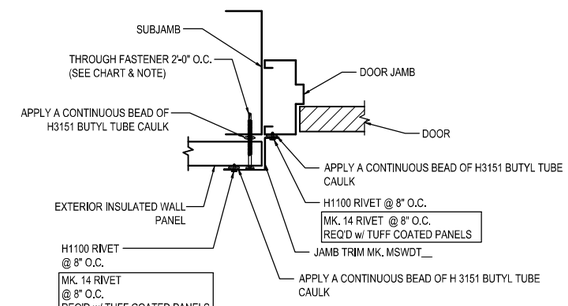

JAMB TRIM DETAIL
SECTION - B

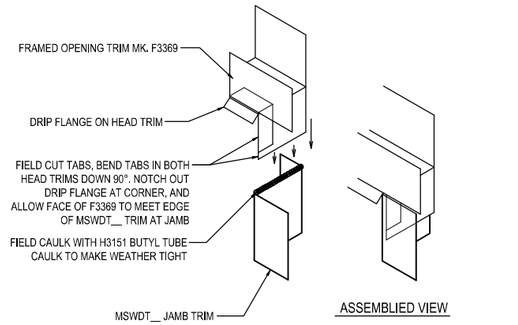

TRIM CORNER DETAIL
TOP RIGHT CORNER SHOWN

WALKDOOR ERECTION DETAILS

USE ONLY WHERE STANDARD NBG DOORS ARE REQUIRED.
SEE BUILDING INFO COVERSHEET FOR STANDARD DOOR REQUIREMENTS.

TRIM_38

ISSUE	DWN	CHK	ENG	PE	DATE
CONST. AB PLAN	NBS	EOP	CBM		7/24/2023
BUILDING DEPARTMENT REVIEW	WBS	DAN	CBM		7/31/2023

NUCOR BUILDING SYSTEMS
300 INDUSTRIAL PARKWAY, WATERLOO, IN 46793
PHONE: (260) 837-7891 FAX: (260) 837-7384
PO BOX 1006, 200 WHETSTONE RD, SWANSEA, SC 29160
PHONE: (803) 568-2100 FAX: (803) 568-2121
600 APACHE TRAIL, TERRELL, TX 75160
PHONE: (972) 524-4000 FAX: (972) 524-4417
1050 WATER LANE, BRIGHAM CITY, UT 84302
PHONE: (435) 919-3100 FAX: (435) 919-3101

PROJECT NAME: WENDOVER FS #13 REPLACEMENT
WENDOVER, NV

CUSTOMER NAME: MICHAEL CLAY CORP
WINNEMUCCA, NV

JOB NUMBER: U23G0555A

SHEET TITLE

RUSSELL SKEEN
07/31/2023
Exp Jun 30, 2024
CIVIL/STRUCTURAL

This seal pertains only to the materials designed and provided by Nucor Building Systems, a division of Nucor Corporation. The drawings and the calculations to which this statement is affixed are the product of Nucor Building Systems and were prepared by a registered professional employed by Nucor Building Systems. Nucor Building Systems does not serve as a "registered design professional" of record and shall not be construed as such.

SHEET
D20 of 20



CORE

5330 Reno Corporate Drive
Reno, NV 89511

January 10, 2023

West Wendover Fire Station No. 13

PHASE 1B SERVICES REPORT

TABLE OF CONTENTS

1.0 Project Overview

2.0 Concept program

3.0 Concept Design Renderings

4.0 Concept Design Analysis

5.0 Sustainability Objective Checklist

6.0 Target Budget Estimate

7.0 Site Logistics Plan

8.0 Preliminary Schedule

CORE

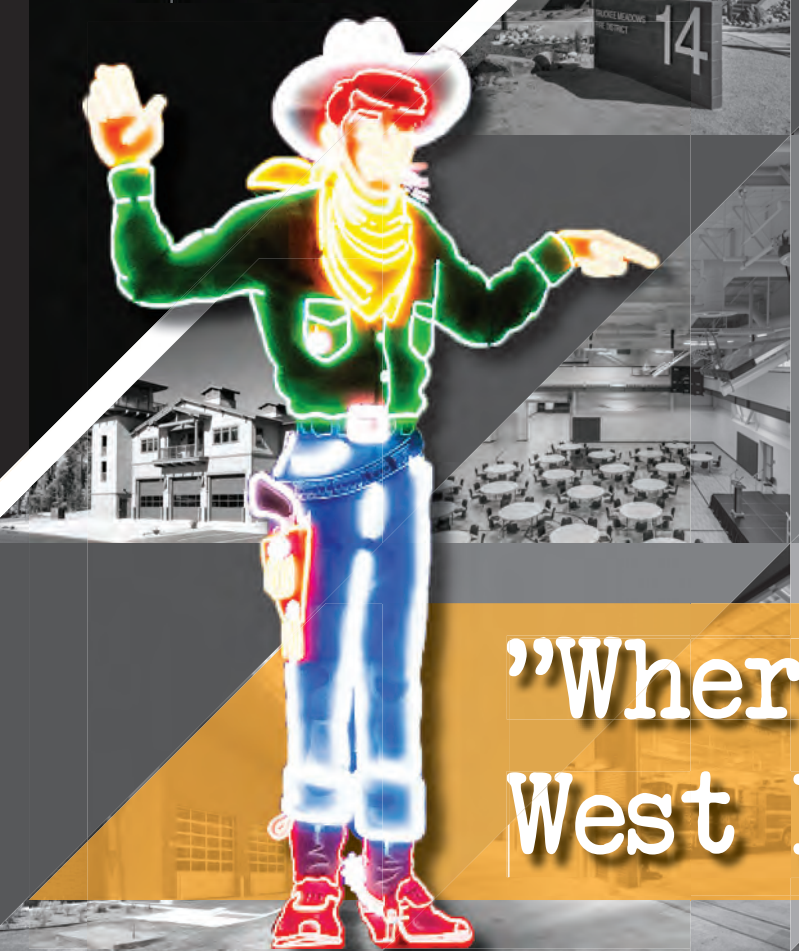

"Where the West Begins"!

1.0
Project Overview

WEST WENDOVER FIRE STATION #13 REPLACEMENT

PHASE 1A PRE-DESIGN + PROGRAM VALIDATION REPORT

EXECUTIVE SUMMARY

This Phase 1A package provides The City of West Wendover Community Development and Fire Department with a resulting analysis from a variety of program considerations to establish a baseline understanding of the unique needs of the Fire Station #13 replacement facility.

The Design|Build collaboration between CORE Construction | TSK Architects and supporting engineering teams has developed the following project concept for program verification and cost analyis (cost analysis in separate document).

Following a series of stakeholder meetings throughout 2022, a reduced scope was agreed upon in consideration of current cost escalation. This scope no-longer includes the residential component of the Initial Basis of Design; however, the full scope for the apparatus bays and support offices were maintained.

The resulting programmatic adjacencies informed the concept floor and site plans as exhibited in the “Concept Design” portion of this package.

The project team appreciates the continued support and input of both City of West Wendover teams as we continue with this process.



PARTICIPANTS

City of West Wendover

Chris J. Melville; City Manager
Raul Naranjo; Public Works Director
Darin Hawkes, City Engineer

West Wendover Fire Department

Jeff Knudtson; Fire Chief

TSK Architects

Chris Lujan
Bruce Preston

CORE Construction

Jeff Jerome
Avery Hacker
Paul Salisbury

PROGRAM APPROVAL SIGNATURE SHEET

Signature Sheet Instructions:

1. This sheet provides space so that all reviewers may include any comments pertaining to the Program Submittal.
2. On the following pages, each reviewer should include their Name and Department followed by their review comments.
3. Steering Committee Members should also include their signatures in the “Committee Approval” section below.
4. Any reviewer may comment.
5. All comments are welcome.

Committee Approvals :

Chris J. Melville: _____
City of West Wendover, City Manager

Raul Naranjo: _____
City of West Wendover, Public Works Director

Darin Hawkes: _____
City of West Wendover, City Engineer

Jeff Knudtson: _____
West Wendover Fire Department, Fire Chief

Reviewer Name: _____ **Reviewer Department:** _____

Comments: _____

Reviewer Name: _____ **Reviewer Department:** _____

Comments: _____

Reviewer Name: _____ **Reviewer Department:** _____

Comments: _____

Reviewer Name: _____ **Reviewer Department:** _____

Comments: _____

Reviewer Name: _____ **Reviewer Department:** _____

Comments: _____

Reviewer Name: _____ Reviewer Department: _____

Comments: _____

_____

_____

Reviewer Name: _____ Reviewer Department: _____

Comments: _____

_____

_____

Reviewer Name: _____ Reviewer Department: _____

Comments: _____

_____

_____

Reviewer Name: _____ Reviewer Department: _____

Comments: _____

_____

_____

Reviewer Name: _____ Reviewer Department: _____

Comments: _____

_____

_____

Reviewer Name: _____ Reviewer Department: _____

Comments: _____

_____

_____

Reviewer Name: _____ Reviewer Department: _____

Comments: _____

_____

_____

Reviewer Name: _____ Reviewer Department: _____

Comments: _____

_____

_____

ITEMS TO BE SOLVED IN DESIGN DEVELOPMENT PHASE (1B)

Site

- Confirm final location & access for new roadway to business district
- Verify fire station operational circulation based on updated apparatus
- Developed enhanced landscape design
- Determine scope for additional parking

Building

- Establish building envelope details
- Develop refined Building Code Analysis
- Establish framework for specifications for major building systems including building envelope, Structural, Mechanical/Plumbing, Electrical/Low Voltage, and Fire Protection

Conceptual Design Phase Goals

- Verify GMP against previous scope and budget
- Present findings and recommendations to city leadership & USDA
- Revise document/graphics based on Leadership feedback prior to Construction Documents (Phase 2)

2.0
Concept program

PROGRAM SUMMARY

Overview

The following programmatic findings establish the basis of design for the concept presented within this document. The determniation of these spatial allocations were confirmed throughout the program validation process and confirmed following regular OAC meetings. This concept provides a station with 5 double-deep apparatus bays and an office component with staff amenities. Detailed tabluations are outlined in the subsequent pages.

Fire Station #13 PROGRAM SUMMARY	
1.1 | Offices & General	643
1.2 | Activity Center	822
1.3 | Dormitory Rooms	-
1.4 | Dormitory Restrooms	-
1.5 | Building Support	15
2.1 | Fire Apparatus Support	9,361
Net Subtotal	10,841
Grossing Factor (5%)	542
BUILDING GROSS AREA TOTAL	11,383

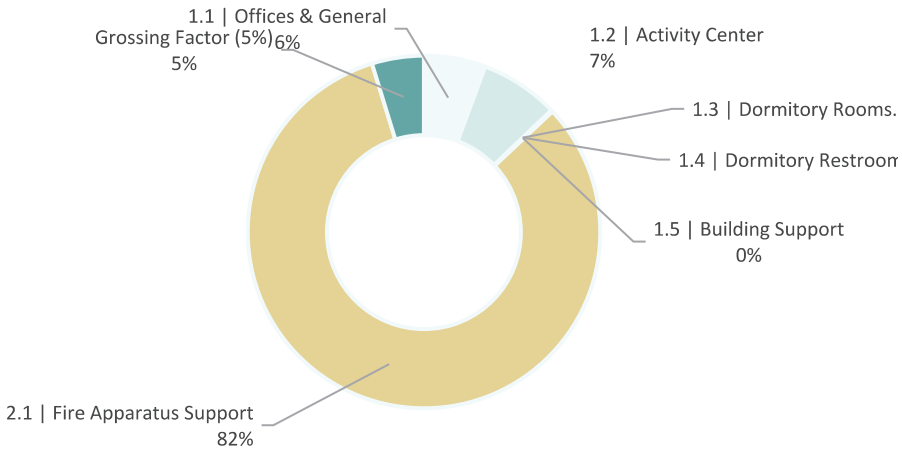

PROGRAM DETAILS - OFFICE SPACES

WEST WENDOVER FINAL SPACE PROGRAM BASED ON BUDGET 10/21/2022

ROOM #	ROOM NAME	QUANTITY	SIZE (SF)	BASELINE PROGRAMMED AREA (SF)	PHASE-1 DESIGNED AREA (SF)	COMMENTS
1	**Staff Spaces**					
1.1	**Offices & General**			**1115**	**643**	
1.11	Public Reception Area	1	110	110	104	
1.12	Public Unisex Restroom	1	80	80	62	
1.12.1	Custodial	1	50	50	0	TO BE IN SUBSEQUENT PHASE
1.13	I.T. Room	1	120	120	97	
1.14	Alarm Station	1	175	175	0	SPACE NOT REQUIRED WITH CURRENT OPERATIONS, RADIO & CHARGING TABLE LOCATED IN APPARATUS BAY
1.15	Captain's Office	2	115	230	234	
1.16	Chief's Office	1	150	150	146	
1.17	Firefighter & EMS Staff Office	1	200	200	0	SPACE NOT REQUIRED WITH CURRENT OPERATIONS
1.21	Staff Unisex Restroom	0	80	0	0	USE PUBLIC RESTROOM
1.2	**Activity Center**			**2260**	**822**	
1.21	Physical Training Room	1	650	650	0	SPACE NOT REQUIRED WITH CURRENT OPERATIONS, TO BE IN SUBSEQUENT PHASE
1.22	Dayroom	1	600	600	387	
1.23	Fire Fighter Kitchen & Dining Area	1	650	650	333	
1.24	Kitchen for Day Staff	1	200	200	0	SPACE NOT REQUIRED WITH CURRENT OPERATIONS
1.25	Ice Macine	1	60	60	0	MACHINE LOCATED IN APPARATUS BAY FOR EMERGENCY RESPONSE SUPPORT
1.26	Equipment Storage	1	100	100	102	
1.3	**Dormitory Rooms**			**1200**	**0**	
1.31	Captain's Dorm	1	120	120	0	TO BE IN SUBSEQUENT PHASE
1.32	Chief's Dorm	1	120	120	0	TO BE IN SUBSEQUENT PHASE
1.33	Staff Dorm	8	120	960	0	TO BE IN SUBSEQUENT PHASE
1.4	**Dormitory Restrooms**			**1120**	**0**	
1.41	Staff Toilet	5	80	400	0	TO BE IN SUBSEQUENT PHASE
1.41.1	Custodial Storage/Laundry	1	120	120	0	TO BE IN SUBSEQUENT PHASE
1.42	Staff Shower	5	80	400	0	TO BE IN SUBSEQUENT PHASE
1.43	Staff Unisex Toilet / Shower	1	100	100	0	TO BE IN SUBSEQUENT PHASE
1.44	Captain's Toilet / Shower	0	100	0	0	TO BE IN SUBSEQUENT PHASE
1.45	Chief's Unisex Toilet / Shower	1	100	100	0	TO BE IN SUBSEQUENT PHASE
1.5	**Building Support**			**330**	**15**	
1.51	Fire Riser	1	60	60	15	
1.52	Electrical Room	1	120	120	0	**TO BE CONFIRMED DURING DESIGN**
1.53	Mechanical Room	1	150	150	0	**TO BE CONFIRMED DURING DESIGN**
1.54	Equipment & Supplies Storage (w/ basement)	1	400	400	0	TO BE LOCATED IN 5TH BAY, TO BE RELOCATED IN SUBSEQUENT PHASE
			Subtotal SF	**6025**	**1480**	

PROGRAM DETAILS - APPARATUS BAY + EXTERIOR

ROOM #	ROOM NAME	QUANTITY	SIZE (SF)	PROGRAMMED AREA (SF)		COMMENTS
2 | Equipment Spaces						
2.1	**Fire Apparatus Support**			**9415**	**9361**	
2.11	Apparatus Bays	1	7000	7000	8537	Request 5 bays at 70 deep x 20' wide +/- 7,500 s.f. (1400 min. s.f. each) | 85'-0" (D) x 18'-0" (W) TO MEET REQ'S.
2.11.1	Unisex Restroom	1	80	80	90	Includes Shower & Linen
2.11.1.1	Custodial	1	100	100	0	Within Decon. Room
2.12	Redzone Gear Cleaning Vestibule	1	200	200	83	Gross Decon. Area, incl boot wash station (~15sf) (NOT AN EXTERIOR FUNCTION)
2.12.1	Decontamination Area	1	100	100	76	Includes Hand Sink, Eyewash Station, Mop Sink
2.12.2	Laundry & Cleaning Room	1	175	175	61	
2.12.3	Turnout Gear Storage	1	860	860	314	(32) lockers at 24" wide x 18" deep, center-island configuration (~9'-6" x 16'-0", ea.)
2.13	SCBA Storage	1	400	400	0	
2.14	Tool Shop	1	200	200	0	4ft. Buffer along south wall
2.15	Equipment Room	1	150	150	200	Storage between Bay-1 & Bay-2
2.16	Medical Gear Storage Room	1	150	150	0	
			Subtotal SF	**9415**	**9361**	
			Total SF	**15440**	**10841**	
			Grossing Factor (20%)	3088	542	** 5% used for Phase-1 Design
			OVERALL SF	**18528**	**11383**	
3	**FS Exterior Spaces**					
3.01	Public Visitor Parking (5+2 ADA)	8			7	Expanded parking at City Hall entry (Alternate Option)
3.02	Employee Parking (6+1 ADA+4 TEMP.)	26			11	Provided at Phase-1
	Total Parking Spaces	**34**			**18**	
3.03	Exterior monument sign/address		20	sf	20	
3.04	Trash Enclosure		200	sf	200	TBD
3.05	Exterior Entry Patio		200	sf	0	TO BE IN SUBSEQUENT PHASE
3.06	Exterior Storage Building (or Covered Storage)		800	sf	0	Not in programm but recommended by AE Team.
3.07	Exterior Secure Staff Patio		400	sf	570	
3.08	Exterior Emergency Generator		400	sf	400	TBD
	Subtotal Exterior Spaces for FS		**2020**	sf	**1190**	

3.0
Concept Design Renderings

CONCEPT DESIGN

ARCHITECTURAL DRAWINGS

CONCEPT SITE PLAN

NOTE: Refer to digital attachments for full-size drawings

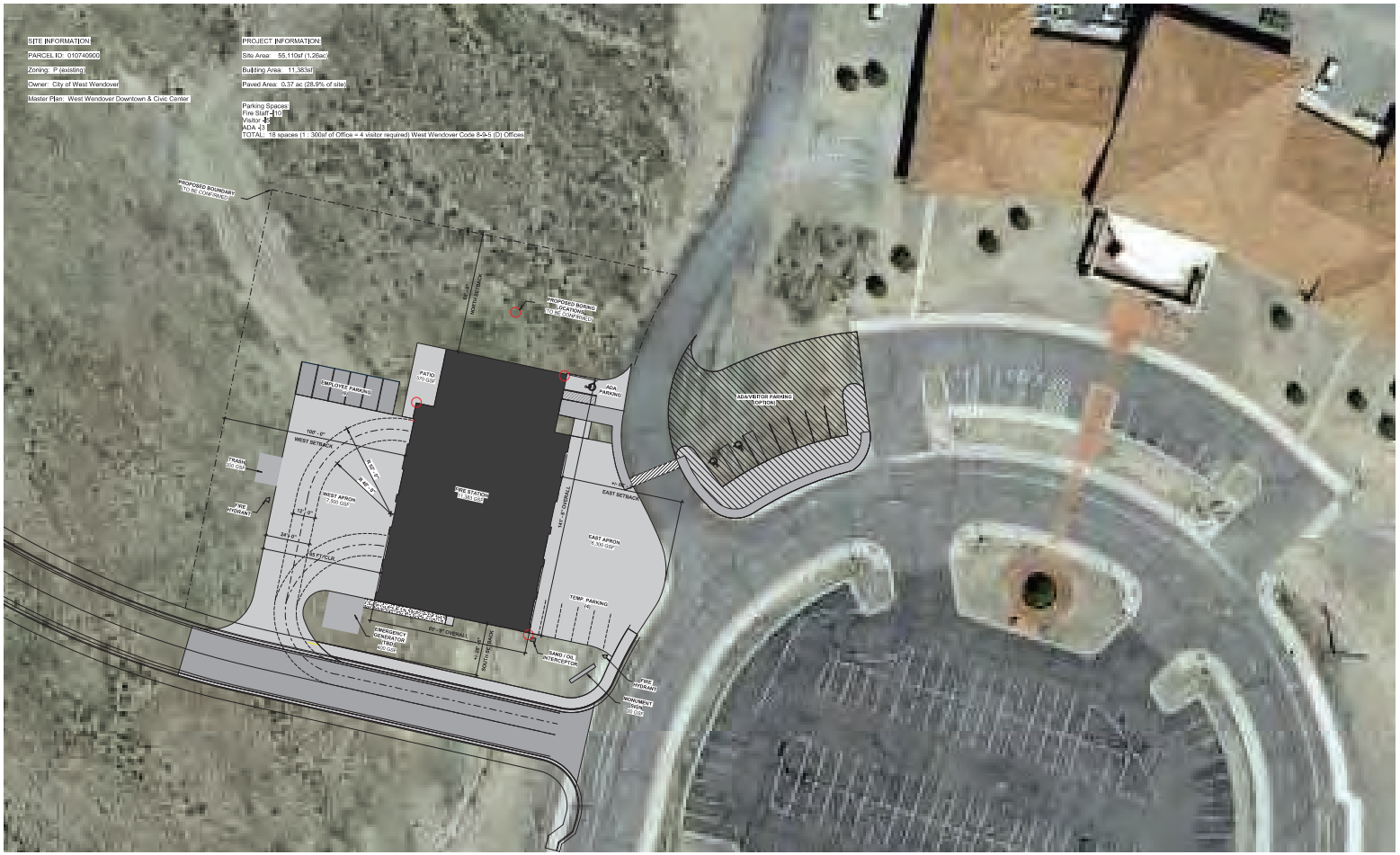

CONCEPT FLOOR PLAN

NOTE: Refer to digital attachments for full-size drawings

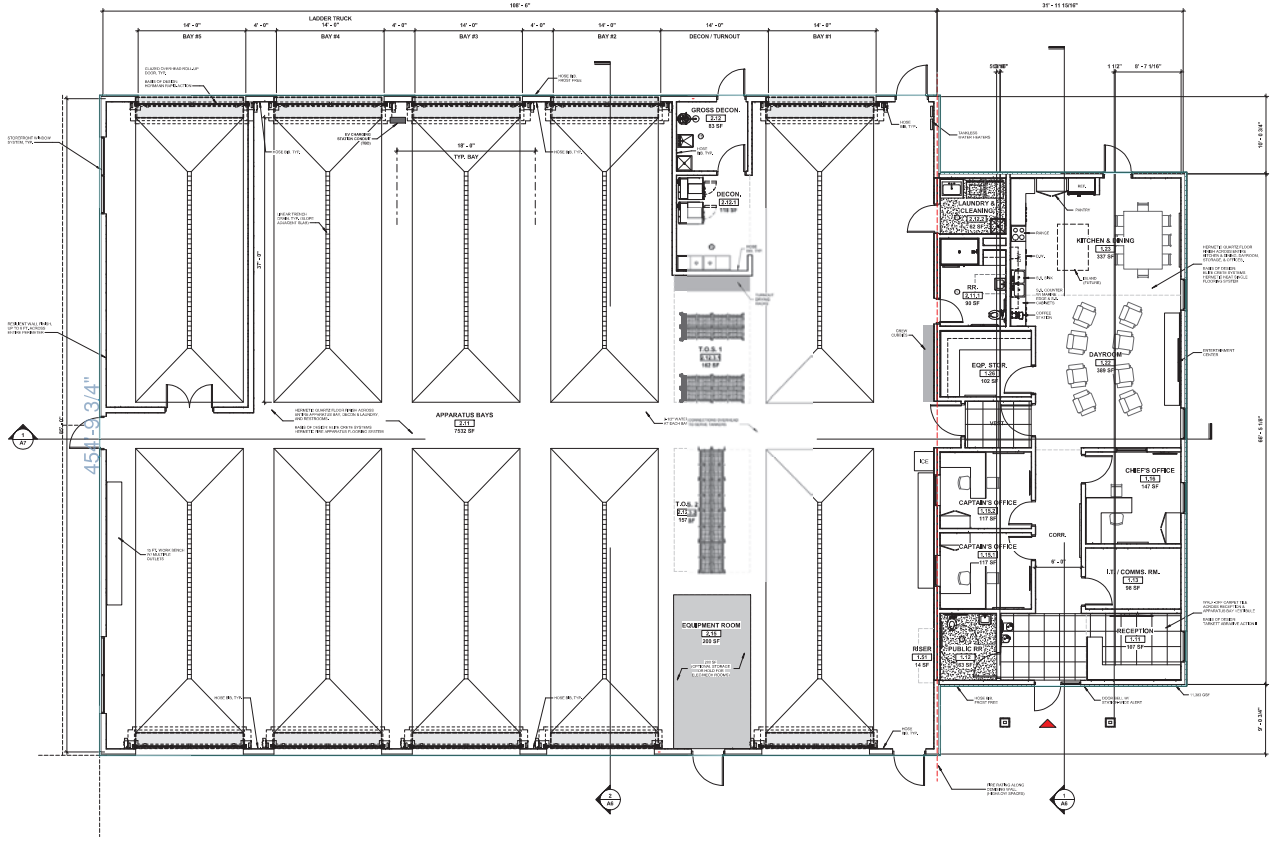

1 CONCEPT FLOOR PLAN - 5-BAY CONFIGURATION
SCALE: 3/16" = 1'-0"
11,383 SF

NORTH

CONCEPT CEILING PLAN

NOTE: Refer to digital attachments for full-size drawings

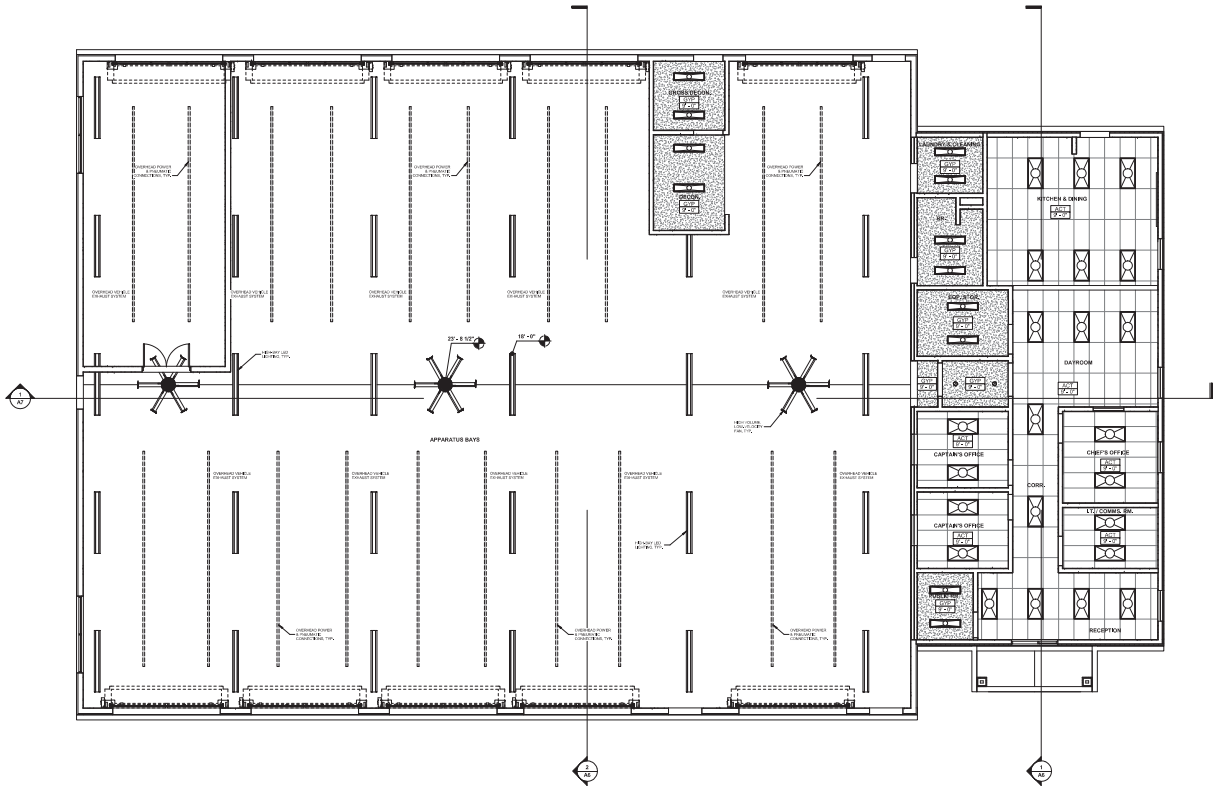

1 CONCEPT CEILING PLAN - 5-BAY CONFIGURATION

CONCEPT ROOF PLAN

NOTE: Refer to digital attachments for full-size drawings

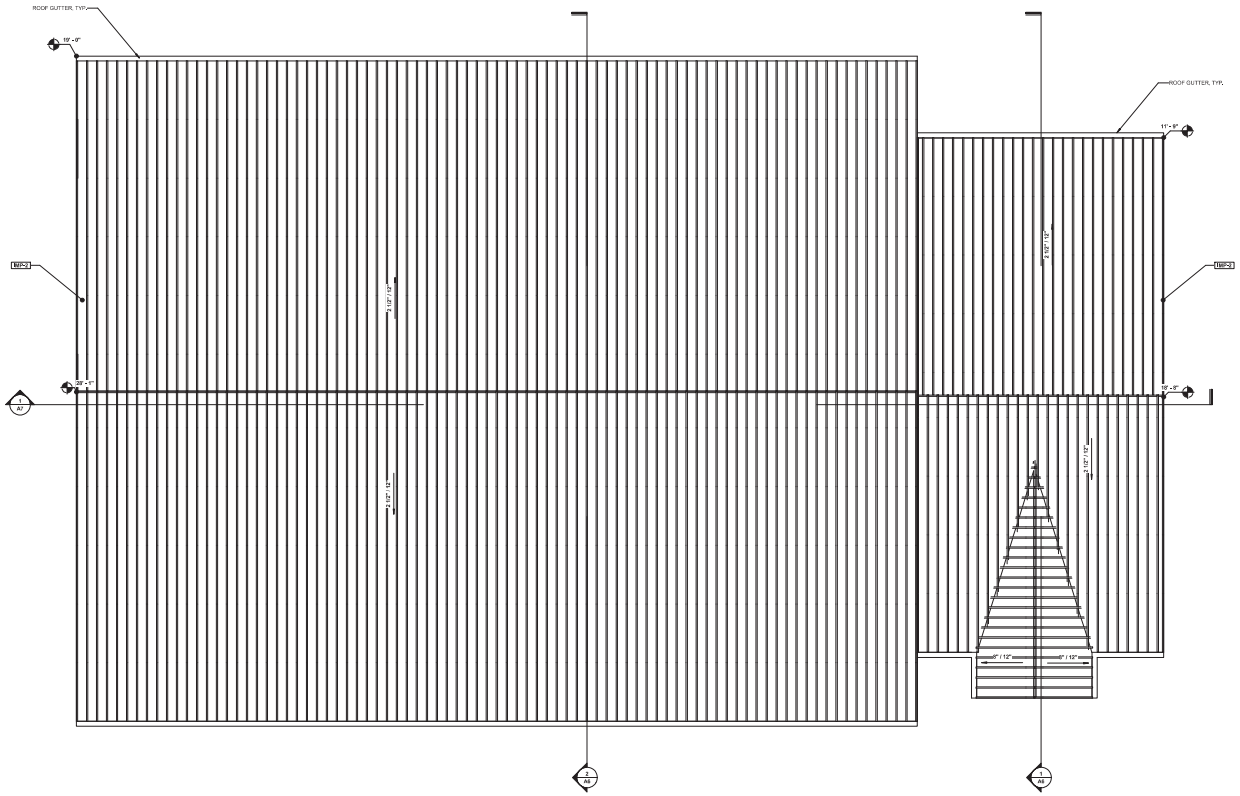

1 CONCEPT ROOF PLAN - 5-BAY CONFIGURATION
SCALE: 3/16" = 1'-0"

NORTH

CONCEPT BUILDING SECTIONS

NOTE: Refer to digital attachments for full-size drawings

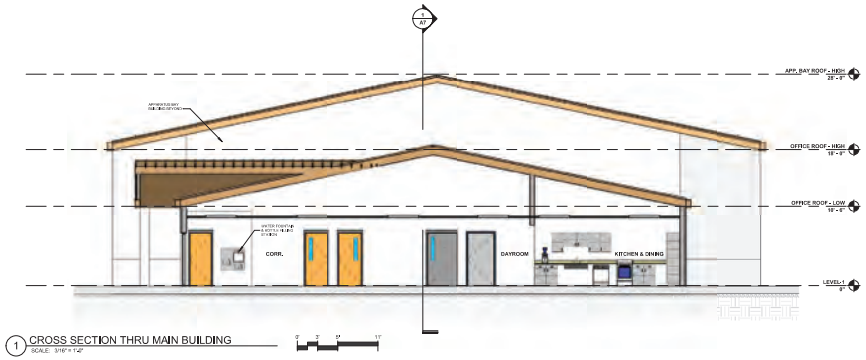

1 CROSS SECTION THRU MAIN BUILDING
SCALE: 3/16" = 1'-0"

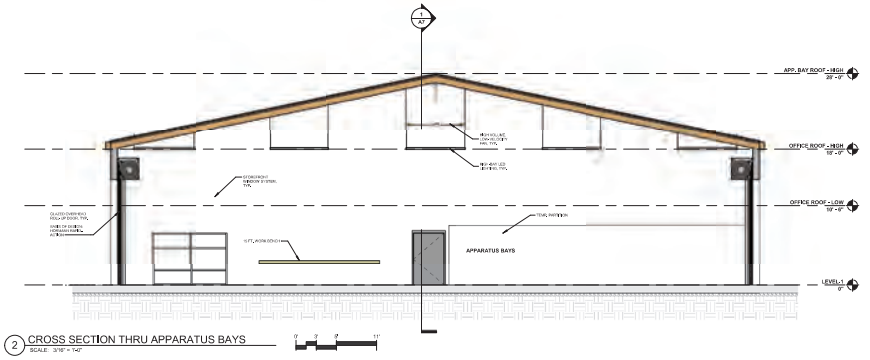

2 CROSS SECTION THRU APPARATUS BAYS
SCALE: 3/16" = 1'-0"

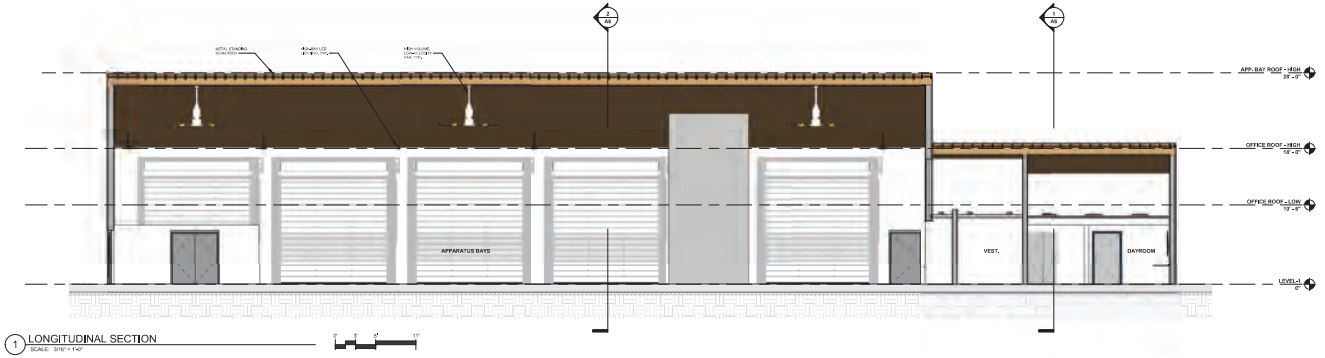

1 LONGITUDINAL SECTION
SCALE: 3/16" = 1'-0"

CONCEPT BUILDING ELEVATIONS

NOTE: Refer to digital attachments for full-size drawings

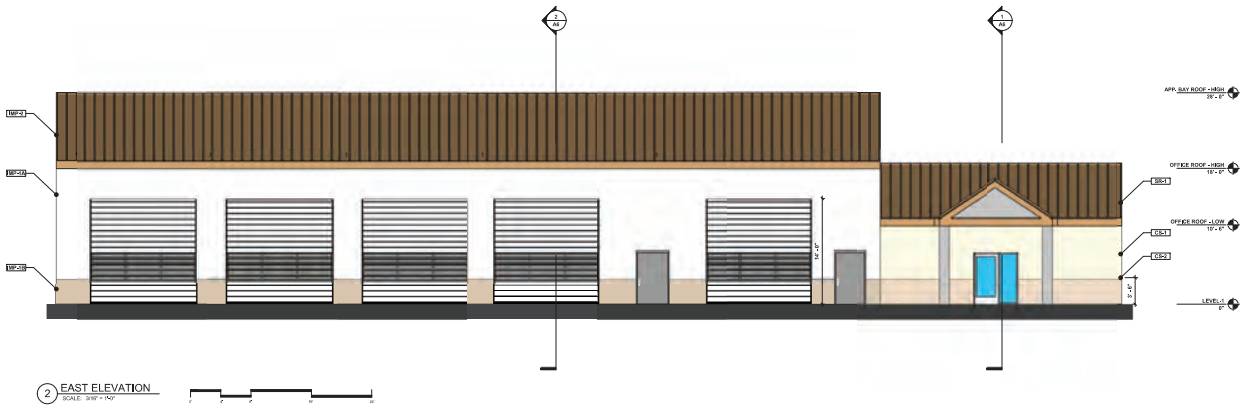



CONCEPT BUILDING ELEVATIONS

NOTE: Refer to digital attachments for full-size drawings

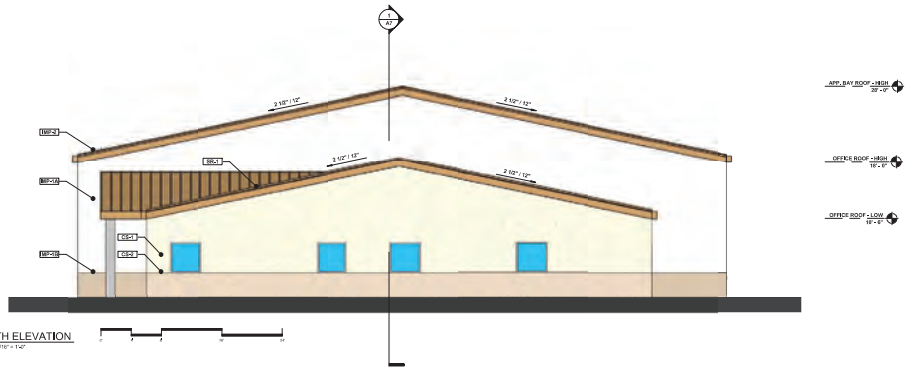

1 NORTH ELEVATION

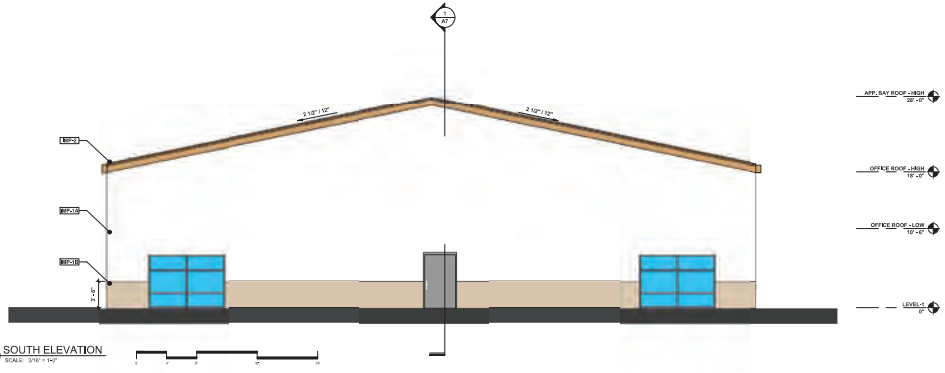

2 SOUTH ELEVATION

CONCEPT BUILDING MATERIAL SCHEDULES

BUILDING MATERIAL SCHEDULE - EXTERIOR

KEY	DESCRIPTION	MANUFACTURER (BASIS OF DESIGN)	MODEL NUMBER	COLOR	REMARKS
CLAY BRICK					
CB-1	STRUCTURAL CLAY BRICK	INTERSTATE BRICK	ATLAS | 8" x 2-1/4" x 16" CENTER SCORED	TERRA COTTA - MATTE	EXTERIOR MONUMENT SIGN W/ CONCRETE CAP
EIFS					
CS-1	EXTERIOR INSULATION FINISH SYSTEM	DRYVIT	SANDBLAST	COLOR TO MATCH PG4	SEE EXTERIOR ELEVATIONS
CS-2	EXTERIOR INSULATION FINISH SYSTEM	DRYVIT	SANDBLAST	COLOR TO MATCH PG4	SEE EXTERIOR ELEVATIONS
INSULATED METAL PANEL					
IMP-1A	INSULATED METAL PANEL	NUCOR	WEST | 2.5" R25 WALL (HEAVY EMBOSSED) - SANTA FE STYLE	DESERT SAND	FLAT PANEL W/ TEXTURE | DOWNSPOUTS TO MATCH
IMP-1B	INSULATED METAL PANEL	NUCOR	WEST | 2.5" R25 WAINSCOT (HEAVY EMBOSSED) - SANTA FE STYLE	SURREY BEIGE	FLAT PANEL W/ TEXTURE | DOWNSPOUTS TO MATCH
IMP-2	INSULATED METAL PANEL	NUCOR	SPEC | 4" R22 STANDING SEAM ROOF	TERRA COTTA	HIDDEN FASTENER TRIM & GUTTERS TO MATCH
STANDING SEAM ROOF					
SR-1	STANDING SEAM ROOF	NUCOR	CRT STANDING SEAM ROOF SYSTEM	TERRA COTTA	HIDDEN FASTENER TRIM & GUTTERS TO MATCH

BUILDING MATERIAL SCHEDULE - INTERIOR

KEY	DESCRIPTION	MANUFACTURER (BASIS OF DESIGN)	MODEL NUMBER	COLOR	REMARKS
BASE					
B-1	RUBBER WALL BASE	TARKETT	BASEWORKS - TYPE TS 4"	60 BURNT UMBER	CONFIRM EXISTING CITY HALL MATERIAL
B-2	RESINOUS EPOXY COVE BASE	ELITE CRETE SYSTEMS	HERMETIC FIRE APPARATUS FLOORING SYSTEM	DARK GRAY	@ APPARATUS BAYS
B-3	RESINOUS EPOXY COVE BASE	ELITE CRETE SYSTEMS	HERMETIC NEAT SINGLE FLOORING SYSTEM	LIGHT GRAY	
CEILING					
C-1	ACOUSTICAL CEILING TILE	USG	24" x 48" x 1" MACLYON #96241 LAY-IN SQUARE EDGE	WHITE PANEL / WHITE GRID	15/16" DONN DX GRID, SQ. EDGE
C-2	ACOUSTICAL CEILING TILE	USG	24" x 48" x 5/8" CLEAN ROOM PANEL #96581 NONFIBER, LAY-IN	WHITE PANEL / WHITE GRID	15/16" DONN DX GRID, SQ. EDGE (IN KITCHEN)
C-3	PAINTED GYPSUM BOARD			PT-2, LRV2 - SEE RCP	
CORNER GUARDS					
CG-1	CORNER GUARD	CS GROUP - ACROVYN	COVE 4FT.	STAINLESS STEEL	@ ALL OUTSIDE CORNERS, SURFACE MOUNT
COUNTERTOP					
SS-1	SOLID SURFACE	CORIAN	3/4" QUARTZ	SPARKLING GRANITA	@ RECEPTION COUNTER, RR SINKS & COUNTERS
SS-2	STAINLESS STEEL	TBD	TBD	STAINLESS STEEL	@ KITCHEN & WORK BENCH COUNTERS (MARINE EDGE)
FLOORING					
F-1	WALK-OFF CARPET	TARKETT	ABRASIVE ACTION II 02515	WINTER GRAY 52103	@ ENTRY & VESTIBULE
F-2	RESINOUS EPOXY FLOORING	ELITE CRETE SYSTEMS	HERMETIC FIRE APPARATUS FLOORING SYSTEM	DARK GRAY FIELD W/ SAFETY YELLOW AISLES & STRIPING	@ APPARATUS BAYS
F-3	RESINOUS EPOXY FLOORING	ELITE CRETE SYSTEMS	HERMETIC NEAT SINGLE FLOORING SYSTEM	LIGHT GRAY	
F-4	STATIC DISSIPATIVE VCT	TARKETT	PRIMO SD - STATIC CONTROL	DARK COOL GREY 0583	@ LT. / COMMS. ROOM
WALLS					
W-1	PAINTED GYPSUM BOARD				SEE PAINT COLOR SCHEDULE, FINISH PLANS, AND INTERIOR ELEVATIONS. ABUSE RESISTANT UP TO 8FT, A.F.F., IN CORRIDORS.
W-2	STOREFRONT			ANODIZED ALUMINUM	W ALUMINUM STRW
W-3	TACKABLE WALL SURFACE	KOROBEAL	WALLTALKERS TAC-WALL	03 - ONYX 48"	W ALUMINUM STRW
W-4	FIBER REINFORCED PANEL (FRP)	PANOLAM	PERMITE (5'-0" x 10'-0")	WHITE	@ DECON, & LAUNDRY AREAS
W-5	FIBER REINFORCED LAMINATE (TRL)	PANOLAM		AGITO - DAYDREAMING (SO)	@ VESTIBULE, RESTROOMS & KITCHEN
W-6	LEVEL-5 FINISH GYPSUM BOARD WALL		VINYL GRAPHIC LOCATION (TBD)	SEE VINYL GRAPHIC SCHEDULE & DIGITAL GRAPHICS SPECIFICATION	
W-7	PLYWOOD BACKBOARD				@ LT. / COMMS. ROOM
WINDOW COVERINGS					
WC-1	ROLLSHADE	MECHOSHADE SYSTEM (MANUAL)	SOHO 1600	LIGHT GRAY - 1603 (3% OPEN)	@ OFFICE, DAYROOM, & KITCHEN WINDOWS (DARK GRAY TRIM)

PAINT COLOR SCHEDULE

KEY	DESCRIPTION	COLOR	LOCATION	SHEEN
PG-1	WHITE	SW 7757 HIGHLY REFLECTIVE WHITE	INTERIOR GYP. BOARD WALLS (FIELD), OUTLETS & FACEPLATES TO MATCH	EGGSHELL
PG-2	WHITE	SW 7007 CEILING BRIGHT WHITE	INTERIOR GYP. BOARD CEILINGS, EXPOSED STRUCTURE, EXPOSED DUCTWORK & HVAC GRILLES, LOUV., EXTERIOR SOFFITS	SEMI-GLOSS
PG-3	DARK GRAY	SW 7674 PEPPERCORN	INTERIOR METAL DOORS & METAL DOOR FRAMES	GLOSS
PG-4	DARK BROWN	SW 6180 BEST BRONZE	EXTERIOR METAL DOORS & METAL DOOR FRAMES	GLOSS
PG-5	LIGHT BROWN	SW 9109 NATURAL LINEN	EXTERIOR EIFS FIELD COLOR	MATTE
PG-6	DARK BROWN	SW 9099 STRAPPY	EXTERIOR EIFS FIELD COLOR	MATTE

VINYL GRAPHIC SCHEDULE

KEY	STYLE	LOCATION	NOTES
W-6A	STYLE 1	RECEPTION ENTRY	
W-6B	STYLE 2	DAYROOM	
W-6C	STYLE 3	APPARATUS BAY	

ROOM FINISH SCHEDULE

ROOM NO	ROOM NAME	FLOORING MATERIAL	FLOORING BASE	CEILING MATERIAL	WALLS (ORIENTATION IS BASED ON PROJECT NORTH) NORTH MATERIAL	WEST MATERIAL	SOUTH MATERIAL	EAST MATERIAL	COMMENTS
LEVEL-1									
1.11	RECEPTION	F-1	B-1	C-1	W-6	W-1 | W-5	W-1 | W-2	W-1	
1.12	PUBLIC WC	F-3	B-3	C-2	W-1 | W-5	W-1 | W-5	W-1 | W-5	W-1 | W-5	
1.13	LT. / COMMS. RM.	F-4	B-1	C-1	W-1 | W-7	W-1 | W-7	W-1 | W-7	W-1 | W-7	
1.15.1	CAPTAIN'S OFFICE	F-3	B-1	C-1	W-1	W-1	W-1	W-1	
1.15.2	CAPTAIN'S OFFICE	F-3	B-1	C-1	W-1	W-1	W-1	W-1	
1.16	CHIEF'S OFFICE	F-3	B-1	C-1	W-1	W-1	W-6	W-1	
1.22	DAYROOM	F-3	B-1	C-1	-	W-1	W-6	W-1	
1.23	KITCHEN & DINING	F-3	B-1	C-2	W-1	W-1 | W-5	-	W-1	
1.26	EQP. STOR.	F-1	B-1	C-2	W-1	W-1	W-1	W-1	
1.21	TIDES	F-2	B-2	-	-	-	-	-	
2.11	APPARATUS BAYS	F-2	B-2	INFO-2	INFO-1A | (HPA-19)	INFO-1A | (HPA-19)	INFO-1A | (HPA-19)	INFO-1A | (HPA-19)	
2.11.1	RAL	F-2	B-2	C-2	W-1 | W-5	W-1 | W-5	W-1 | W-5	W-1 | W-5	
2.12	GROSS DECON.	F-2	B-2	C-3	W-1 | W-4	W-1 | W-4	W-1 | W-4	W-1 | W-4	
2.12.1	DECON.	F-2	B-2	C-3	W-1 | W-4	W-1 | W-4	W-1 | W-4	W-1 | W-4	
2.12.2	LAUNDRY & CLEANING	F-2	B-2	C-3	W-1 | W-4	W-1 | W-4	W-1 | W-4	W-1 | W-4	
2.12.2.1	T.O.S. 1	F-2	-	INFO-2	-	-	-	-	
2.12.3.2	T.O.S. 2	F-2	-	INFO-2	-	-	-	-	
2.13	EQUIPMENT ROOM	F-2	B-1	INFO-2	-	-	-	-	

CONCEPT DESIGN

ARCHITECTURAL RENDERINGS

SE AERIAL VIEW



NE EYE-LEVEL VIEW



SE EYE-LEVEL VIEW



SW EYE-LEVEL VIEW



4.0
Concept Design Analysis

BUILDING CODE ANALYSIS

APN: 010-740-900
ZONING: (P) Public

Applicable Codes:
IBC - 2018
IRC - 2018
IEBC - 2018
IECC – 2018
IFGC – 2018
UMC – 2018
IPMC – 2018
ISPSC – 2018
ICC/ANSI A117.1 – 2009
IFC – 2018
IWUIC – 2018
NORTHERN NEVADA AMENDMENTS 2018
NEC – 2017
IMC – 2018
UPC – 2018

Occupancy Classifications:
B Occupancy (Section 304.1)
Staff Office Spaces, Support Spaces

S-2 Occupancy (Section 311.2)
Apparatus Bay, Support Spaces

Fire Sprinklers Provided:
Yes - installed in accordance with Section 903.3.1.1

Construction Type: Type II-B + V-B
Actual Height: 1 Story / 28'-0"
Actual Area: 11,383 sf

Allowable Height: 4 Story (Table 504.4) [B , S-2]
75' (Table 504.3) [B, S]

Allowable Area: 92,000 (B) (Table 506.2)
104,000 (S-2) (Table 506.2)

Allowable Building Area: (Section 508.4.2)
B 2,145 sf / 11,383 sf = 0.188 $\leq$ 1 --> OK
S-2 9,238 sf / 11,383 sf = 0.811 $\leq$ 1 --> OK

Frontage increase (If): Not Required (Section 506)

Required separation of occupancies:
1 hr (Occupancy separations between B and S-2)
(Table 508.4)

Fire Resistance Rating Requirements: (Table 601)

Structural Frame:	0-hr
Bearing Exterior Walls:	0-hr
Bearing Interior Walls:	0-hr
Non--Bearing Exterior Walls:	(Table 602)
Non-Bearing Interior Walls:	0-hr
Floor:	0-hr
Roof:	0-hr

Exterior Wall Fire Resistance Rating: (Table 602)
B, S-2: 5' $\leq$ X < 10' = 1 hr | 10' $\leq$ X < 30' = 0

Maximum area of exterior wall openings: (Table 705.8)
15' $\leq$ X < 20' = 75% | 20' $\leq$ X < 25' = No Limit

Chapter 420 Applicable Sections:
420.2 Separation Walls
420.4 Automatic Sprinkler System
420.5 Fire Alarm System and Smoke Alarms

Means of Egress
Spaces with One Exit: (Table 1006.2.1)
B Occ, travel Distance 75 ft (Max Occ 49)
S Occ, travel distance 100 ft (Max Occ 29)

Exit access travel distance: (Table 1017.2)
B: 300 ft.
S-2: 250 ft.

Corridor fire-resistance rating (Table 1020.1)
B: 0-hr
S: 0-hr

Seismic Design Category: D

Ground Snow Load: 30 psf

Flat Roof Snow Load: 22.68 psf

Wind Speed: Exposure C – Risk Category IV = 115mph

Building Risk Category (per IBC table 1604.5): IV

BUILDING CODE ANALYSIS - CONTINUED

TOTAL OCCUPANT LOAD: (Table 1004.5)

B Occupancy:		
Reception (B)	107 sf / 150 occ	1 occ
I.T. / Comms. Rm. (B*)	98 sf / 300 occ	1 occ
Captain's Office (B)	117 sf / 150 occ	1 occ
Captain's Office (B)	117 sf / 150 occ	1 occ
Chief's Office (B)	147 sf / 150 occ	1 occ
Dayroom (B)	389 sf / 15 occ	25 occ
Kitchen & Dining (B)	337 sf / 200 occ	2 occ
Equipment Storage (B*)	102 sf / 300 occ	1 occ
TOTAL B OCCUPANTS:		33 occupants

S-2 Occupancy:		
Turnout Gear Storage	319 sf / 300 occ	2 occ
Gross Decon.	83 sf / 300 occ	1 occ
Decon.	118 sf / 300 occ	1 occ
Laundy & Cleaning	62 sf / 300 occ	1 occ
Equipment Room	200 sf / 300 occ	1 occ
Apparatus Bay	7532 sf / 300 occ	26 occ
TOTAL S-2 OCCUPANTS:		32 occupants

Total occupant load: 65
B: 33 occupants
S: 32 occupants

Plumbing Fixtures Count (Table 2902.1)

	B (33 occ.)	*S* (32 occ.)	TOTAL (REQ.)	TOTAL (INCL.)
WATERCLOSET:	1	1	2	2
LAVATORY:	1	1	2	2
BATH:	-	-	0	1
DRINKING FOUNTAIN:	1	1	2	2
SERVICE SINK:	1	1	2	4

CIVIL DESIGN - SITE PLAN

NOTE: Refer to digital attachments for full-size drawings

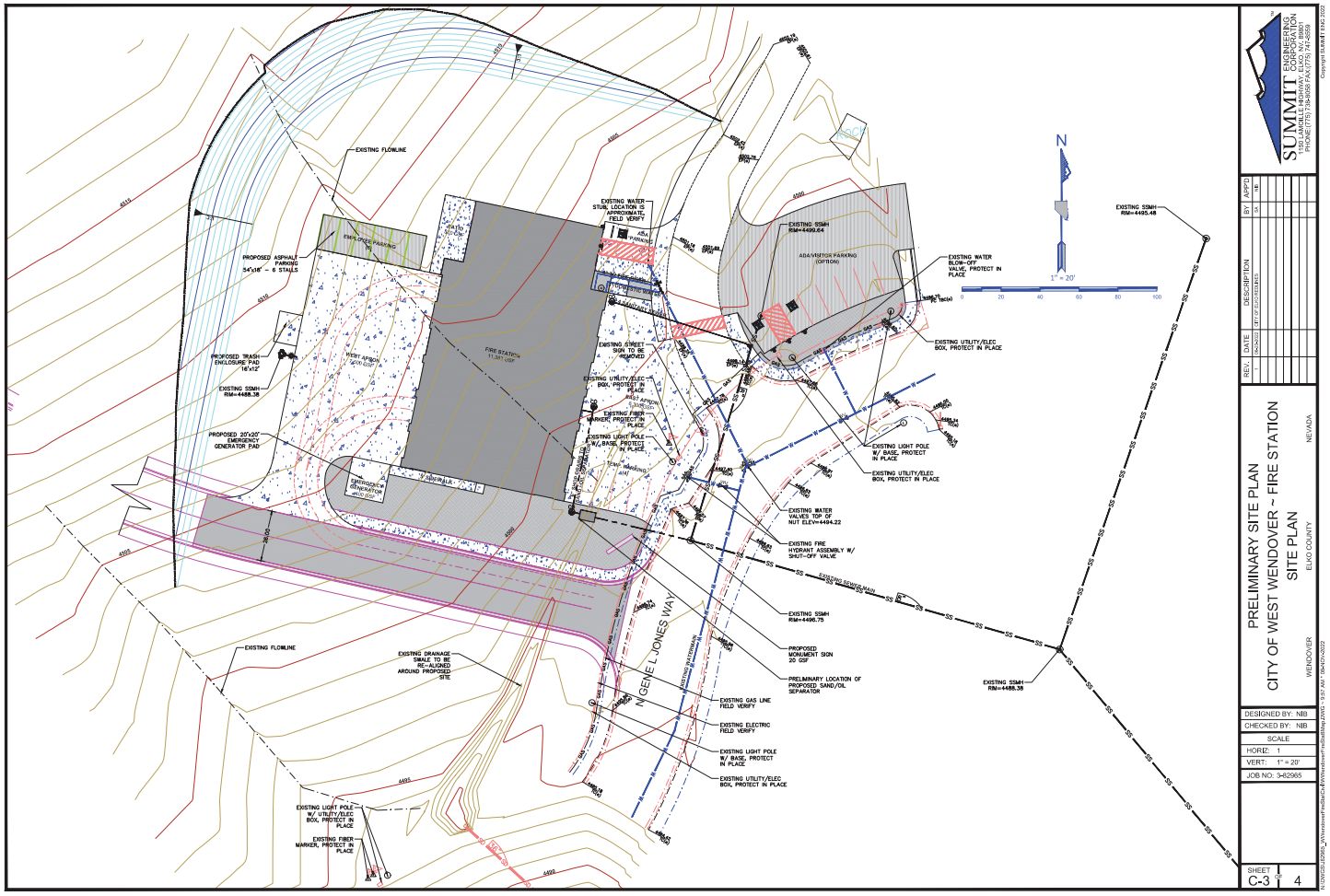

CIVIL DESIGN NARRATIVE

SUMMIT ENGINEERING CORPORATION™

WEST WENDOVER FIRE STATION #13
Narrative (Civil Engineering)

The proposed fire station, when fully graded out will sit on a site slightly greater than 1 acre. The new building will be located next to the existing City Hall building with access off the looped road N. Gene L Jones Way. The Civil Engineering design will be based in accordance with the "Standard Specification for Public Works Construction" Latest Edition.

SITE GRADING

- The proposed site for the building currently slopes from northwest to southeast with a moderate slope between 5%~6% grade. There is an existing drainage swale that crosses the site form a culvert that drains under Interstate 80 (I-80). This drainage swale will need to be re-aligned around the site to drain to the existing 36" culvert that crosses N. Gene L Jones Way, ref site plan.

- A new access road approx 250' long 26' pavement width with curb, gutter and sidewalk will need to be designed and constructed towards the west off of N. Gene L. Jones Way for Fire Apparatus to maneuver through the site and building bays.

- Both concrete driveway aprons on the west and east sides of the building are tentatively planned to be concrete with rebar reinforcement on Structural type 2 base compacted, with all employee and visitor parking to be asphalt on structural type 2 base compacted.

- Existing curb, gutter & sidewalk will need to be removed for construction of access aprons to building driveway bays.

- Based on the flood insurance rate map for the city of West Wendover, 32007C6402E, dated September 4. 2013, a portion of the site along the existing drainage swale does lie within the 100 year flood plain. As described on the FIRM Map (0.2% Annual Chance Flood Hazard, Areas of 1% annual chance flood with average depth less than one foot or with drainage areas of less than one square mile, Zone X)

- Site ADA parking will be required and needs to be van accessible

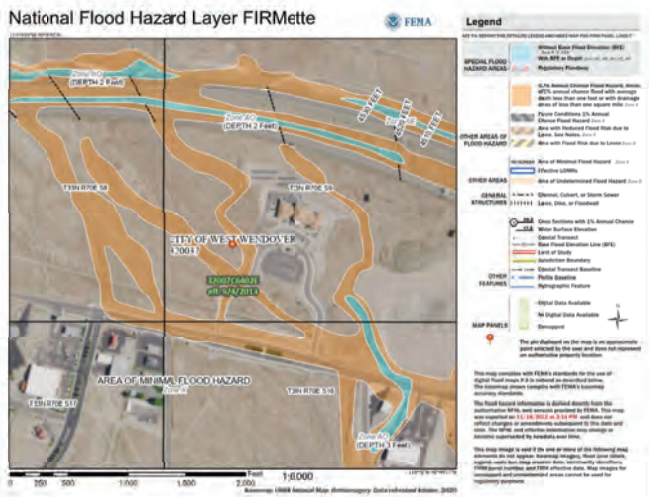

UTILITY

- Currently, the site does have existing sewer and water service to the site, please reference site plan for approximate location of existing water and sewer utilities. Above ground visible utilities were shot by survey crew and are shown on the plans, some utility locations were provided by City of West Wendover Public Works and Community Development departments.

- With the proposed building layout and concrete apron locations, there are a few existing utilities (Fire Hydrants, Light poles, utility boxes) that will have to be removed and relocated to provide access for fire apparatus vehicles.

- All apparatus bays drains will flow into a sand oil separator and then be tied into the existing sanitary sewer system.

Sincerely,

SUMMIT ENGINEERING CORPORATION

Nitin I. Bhakta, PE
VP of Engineering / Elko Area Manager

1150 Lamoille Highway • Elko, Nevada 89801 • (775) 738-8058 FAX (775) 738-8267
5405 Mae Anne Avenue • Reno, Nevada 89523 • (775) 747-8550 FAX (775) 747-8559

STRUCTURAL DESIGN NARRATIVE

Kimley»Horn

West Wendover Fire Station #13

Narrative (Structural)

Overview

The intent of this narrative is to summarize the basis of design of the structural system of the fire station and office. The design criteria and structural systems selection will be discussed.

The fire station will have a five-bay apparatus area and an office area. The structure footprint for the apparatus bay is approximately 108 feet long by 85 feet wide, and the office area is approximately 66 feet long by 32 feet wide. The office area will be structurally isolated from the apparatus bay. The apparatus bay will be a pre-engineered metal building (PEMB), engineered by the supplier. It is anticipated that the lateral load resisting system for the apparatus bay will utilize an intermediate moment frame. The lateral load resisting system for the office area will utilize wood shear walls. The structure is designed in accordance with the 2018 Nevada Building Code (2018 IBC) with 2018 West Wendover Amendments.

Design Criteria

- Design Code: 2018 Nevada Building Code (2018 IBC) with 2018 West Wendover Amendments.
- Risk Category IV
- Design Floor Live Loads (live load will be reduced when allowed by code based on tributary area)
    a. Assembly Areas: 100 psf (unreducible)
    b. Offices: 50 psf, 2000 lb point load
    c. Storage Rooms, Heavy: 250 psf (unreducible)
    d. Apparatus Bays: 14 kip concentrated point load (unreducible)
    e. Mechanical and Electrical Equipment:
        i. Actual equipment weight, refer to MEP
- Design Roof Live Loads:
    a. Apparatus Bay and Office Area Roof live loads: 20 psf (live load will be reduced when allowed by code based on tributary area)
- Snow Loads:
    a. Ground Snow Load, P_g: 30 psf
    b. Flat Roof Snow Load, P_f: 22.68 psf
- Wind Loads:
    b. Wind Speed: 115 mph
    c. Exposure Category: C
- Seismic Loads (to be confirmed by Geotechnical Engineer):
    a. Site Class: D, Default
    b. Importance Factor: 1.50
    c. S_S: 0.327
    d. S_1: 0.114
    e. S_{DS}: 0.336

    f. S_{D1}: 0.178
    g. Seismic Design Category: D

	Apparatus Bay (To be confirmed by supplier)	Office
Lateral Force Resisting System:	Steel Intermediate Moment Frames	Light-frame (wood) Walls Sheathed w/ Wood Structural Panels
R	4.5	6 ½
Ω_0	3	3
C_D	4	4
C_s	0.115	0.079

- Serviceability Criteria:
    a. Live Load (LL) and Total Load (TL)
    b. Deflection: Roof Spans:
        i. Apparatus Bays: L/180 LL, L/120 TL
        ii. Office Area: L/360 LL, L/240 TL

Structural Framing Systems – Apparatus Bay

Steel Moment Frame

- Proprietary PEMB system.

Lateral Systems:

- The lateral force resisting system will consist of steel intermediate moment frames comprised of built-up plate girder beams and columns. Final configurations to be coordinated with the architect. Anticipated column locations are schematically shown on the plans.

Structural Framing Systems – Office Area

Light-Frame Wood Framing

Walls:

- The typical wood shear wall will be structural sheathing rated for shear resistance.
- Typical wood framing is anticipated to be Douglas Fir-Larch sawn lumber 2x6 stud and 4x6 posts. All wood framing shall have a moisture content not more than 19% at time of fabrication and will be Grade No. 1. Structural sheathing shall be 15/32" APA Rated, Structural I.

Roof Framing:

- Prefabricated roof truss, engineered by others.
- Roof trusses will exceed 60'-0" spans, and therefore will require temporary installation restraint/bracing during construction installation, to be provided by Contractor.

kimley-horn.com | 7900 Rancharrah Pkwy Suite 100, Reno, NV 89511 | 775 787 7552

STRUCTURAL DESIGN NARRATIVE - CONTINUED

Lateral Systems:

- The lateral force resisting system will consist of light-frame wood shear walls at locations that match the configuration shown on the plans. Final configurations to be coordinated with the architect.

Foundation and Slab-on-Grade System

- A geotechnical report was not available at the time of this Submittal. Foundation design is based on preliminary information provided by the Geotechnical Engineer via over-the-phone communication.
- The foundation system is anticipated to be isolated spread footings for the Apparatus Bay and continuous strip footings for the Office.
  - Apparatus Bay: Pedestals are anticipated to be 24" x 24" square supported on 5'-0" x 5'-0" x 18" isolated footings. 10" foundation walls supported on 3'-0" wide x 18" thick continuous strip footings will be located on the perimeter of the building. Foundations have been sized based on gravity loading only and will need to be confirmed with the PEMB supplier.
  - Office: 10" foundation walls supported on 3'-0" wide x 18" thick continuous strip footings will be located on the perimeter of the building.
  - Bottom of footing is -36" below finished grade. Refer to schematic plan layout. Note that all foundations have been sized for gravity loads only.
- Both the Apparatus Bay and the Office will have a slab-on-grade. It is anticipated that the slab-on-grade will be isolated from structure. Slab-on-grade thickness will be:
  - Apparatus Bay: 8 inches thick placed on a vapor barrier.
  - Office: 4 inches thick placed on a vapor barrier.
- Over-excavation and re-compaction are unknown at the time of submittal.
- Ground water elevation below grade is unknown at the time of submittal.
- Foundation concrete: 4500 psi @ 28 days.
- Cost Estimating Guidance:
  - Spread Footings: 125 lb/cy (black reinforcement).
  - Pedestals: 120 lb/cy (black reinforcement).
  - Foundation walls: 120 lb/cy (epoxy coated reinforcement).
  - Foundation wall strip footings: 75 lb/cy (black reinforcement).
  - SOG:
    - Apparatus Bay: #4 bar at 18" OC EW, located 2" from the top of the slab. Radiant heating conduits will be embedded in SOG, refer to MEP.
    - Office Bay: 6x6-W2.1xW2.1 WWF, located 2" from the top of the slab.

Expansion Joints

- Seismic separation joints will be required between the Apparatus Bay and the Office. Joints will be approximately 5" thick and will be located between the walls and roof framing.

Deferred Submittal Items

- The following items will be designed and provided by the contractor:
  - Pre-Engineered Metal Building
  - Wood Roof Truss
  - Architectural/metal cladding panel and attachment
  - Bay doors and attachment
  - Temporary earth retention systems and underpinning
  - Temporary shoring and reshoring systems

Miscellaneous Structural Systems:

- Architectural finish will be supported on bearing wood stud walls.
- Two covered entries are anticipated at the office space. Two 3'x3'x12" foundations will be provided per post at each entry (for a total of 4 additional foundations).

End of Structural Basis of Design Narrative

STRUCTURAL DESIGN - FOUNDATION + SLAB-ON-GRADE DIAGRAM

NOTE: Refer to digital attachments for full-size drawings

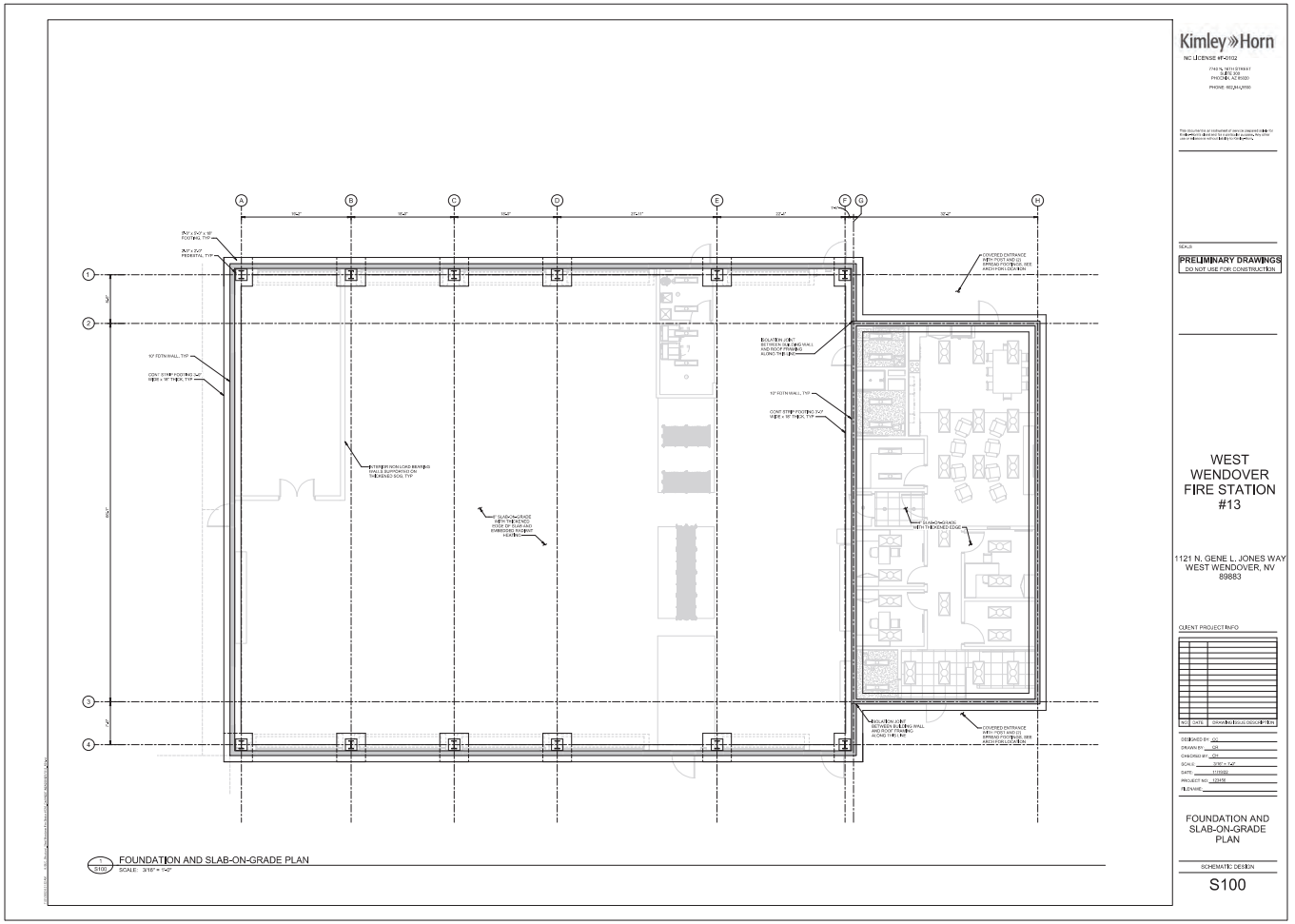

MECHANICAL + PLUMBING DESIGN NARRATIVE

Mechanical Narrative

To: West Wendover Fire Station #13

From: Matt Myres, PE

Kimley-Horn and Associates, Inc.

Date: 11/21/22

Subject: West Wendover Fire Station #13 Mechanical and Plumbing Schematic Design Narrative

Mechanical and Plumbing Overview

Kimley-Horn has outlined the expected mechanical, and plumbing systems that should be considered for the planning purposes of this project. Please note, the system listed in this narrative are a general guideline as to the equipment / systems that are anticipated on this project. This does not identify all design aspects of the of the system that will be required, and all pricing evaluations must account for all systems being installed in accordance with code requirements.

Design Codes

- 2018 Uniform Plumbing Code
- 2018 Uniform Mechanical Code
- 2018 International Energy Conservation Code
- 2019 NFPA 13

Mechanical Basis of Design

Per the West Wendover Resolution 2020-17 the preliminary HVAC loads for the proposed building were calculated using the following criteria:

Frost Depth: 24 inches
Winter Design Temperature: 10 degrees F
Air Freezing Index: 594
Mean Annual Temperature: 49.4 degrees F

The HVAC heating and cooling equipment system will consist of three temperature control zones for the facility. Two of the zones will serve the indoor office space. The zones office areas will be maintained at 72°F for cooling and 68°F for heating.

The Apparatus Bay will not have a cooling system but will have HVLS fans installed throughout the bays. The heating system shall be designed to maintained 60°F-65°F (adjustable) during winter design temperatures.

Below is a brief description of the mechanical HVAC systems expected for the West Wendover FS #13.

1. Office Space:
   a. Heating / Cooling: The office and breakroom spaces will have two zones each with a gas furnace and matching cooling coil horizontally mounted in the ceiling space. These indoor units will be connected to two 3-ton outdoor condensing units located on the north side of the building.
   b. All mechanical equipment, ducting, return grilles and supply diffusers mounted throughout the office space will be mounted in the ceiling space above the occupied offices. The outside air duct connection will come from a roof hood inlet down to each unit. Frames on diffusers and grilles will match the reflected ceiling plan proposed by the architectural drawings
   c. Exhaust fans: There will be general exhaust fans provided in the restrooms and the decontamination rooms. Each exhaust fans will be no more than ½ hp and will be ceiling mounted.
2. Apparatus Bay:
   a. The apparatus bays will be heated by ten individual gas fired infrared tube heaters located to the side of each fire truck in the bays. The current layout does not include a cooling system for the apparatus bay. The combustion air will be required for the heater will come from the bay itself and will not required an outside air intake. The flues for each tube heater will penetrate the roof and will be terminated with a weathertight roof cap.
   b. The apparatus bay will contain a source capture vehicle exhaust system serving each truck in the bay. Each bay will be fitted with an individual Nederman Magna Rail Track exhaust system at each truck to remove the exhaust from the trucks as they are started and drive out of the bays. Each rail will have a dedicated high pressure exhaust fan blower that will have a termination up through the roof. Each exhaust fans will have approximately a 3 hp fan mounted from the structure in the bay.
   c. Each bay will include high volume low speed (HVLS) fans per the architectural layout.

Alternative Options to the proposed HVAC systems that could be considered include the following:

1. Use of a radiant floor heating system in the the bays could be an alternative option for heating. The heating system would need to include a space for the mechanical heating equipment, boilers, pumps, manifold headers, zone valves, expansion tank, air separator and the basic boiler system components would need to be included in the design. In addition to the required equipment, all floors would need to have oxygen barrier PEX piping install in the bay slab floors. The design would likely include ¾" PEX piping laid out at 9 inches on center circuits.
2. Cooling alternatives for the bay could include evaporative cooling units that could be mounted on the south wall of the bays and ducted the length of the bay with supply diffusers mounted in the ducts. These units would need to be sized to accommodate an air change of the space in 3 minutes, or 20 air changes per hour. Air relief hoods would need to be added for the evaporative cooling option.
3. Regardless of any alternative options presented for the Apparatus Bay, the vehicle exhaust system would not change in design criteria.

Plumbing Basis of Design

The plumbing design will consist of both the water and sanitary waste systems within the machine room and restrooms with one water spigot located outside. The water heaters will be electric point of use tankless type provided beneath each fixture requiring hot water. Each water heater will be selected to serve the specific plumbing fixture type and commercial grade.

Below is a brief description of each plumbing system expected for the West Wendover FS #13.

- Domestic Water: The building will be served with a tankless instantaneous water heater for the lavatories and the break area sink, as well as the gear turnout and decontamination rooms in the apparatus bay.
- Assume meters with reporting capabilities for the water piping serving the building. Water will be brought to the building from the water main to ¾" piping to the water closets, lavatories and sinks, water fountains, and the washing machines.
- Waste piping system: Waste from the bathrooms, sinks, and washing machines will be a 4in pipe connected to the sewage line.
- Gas Piping System: 2-inch gas piping will be routed from the gas meter at the north side of the building to each indoor furnace serving the office space and to each infrared tube heater located in the bays as shown on the plans.
- Drain system for the Apparatus Bays: Each bay will have trench drains with piping connect and routes to a sand oil interceptor.
- Storm Drain System: The storm drainage from the roof will be handled via rain gutters with downspouts that will drain on grade and sheet flow to the storm drain inlets on site.

Automatic Fire Sprinkler Basis of Design

The fire sprinkler system requirements for the building design will be provide as a performance specification and will be required to be installed in accordance with the currently adopted NFPA 13 code. The system will require the backflow provisions on the system along with a fire riser and all required tamper proof and reporting provisions per the code and Authority Having Jurisdiction.

Sincerely,

KIMLEY-HORN AND ASSOCIATES, INC.

By: Matt Myres, P.E.
Project Manager

MECHANICAL DESIGN - FLOOR PLAN DIAGRAM

NOTE: Refer to digital attachments for full-size drawings

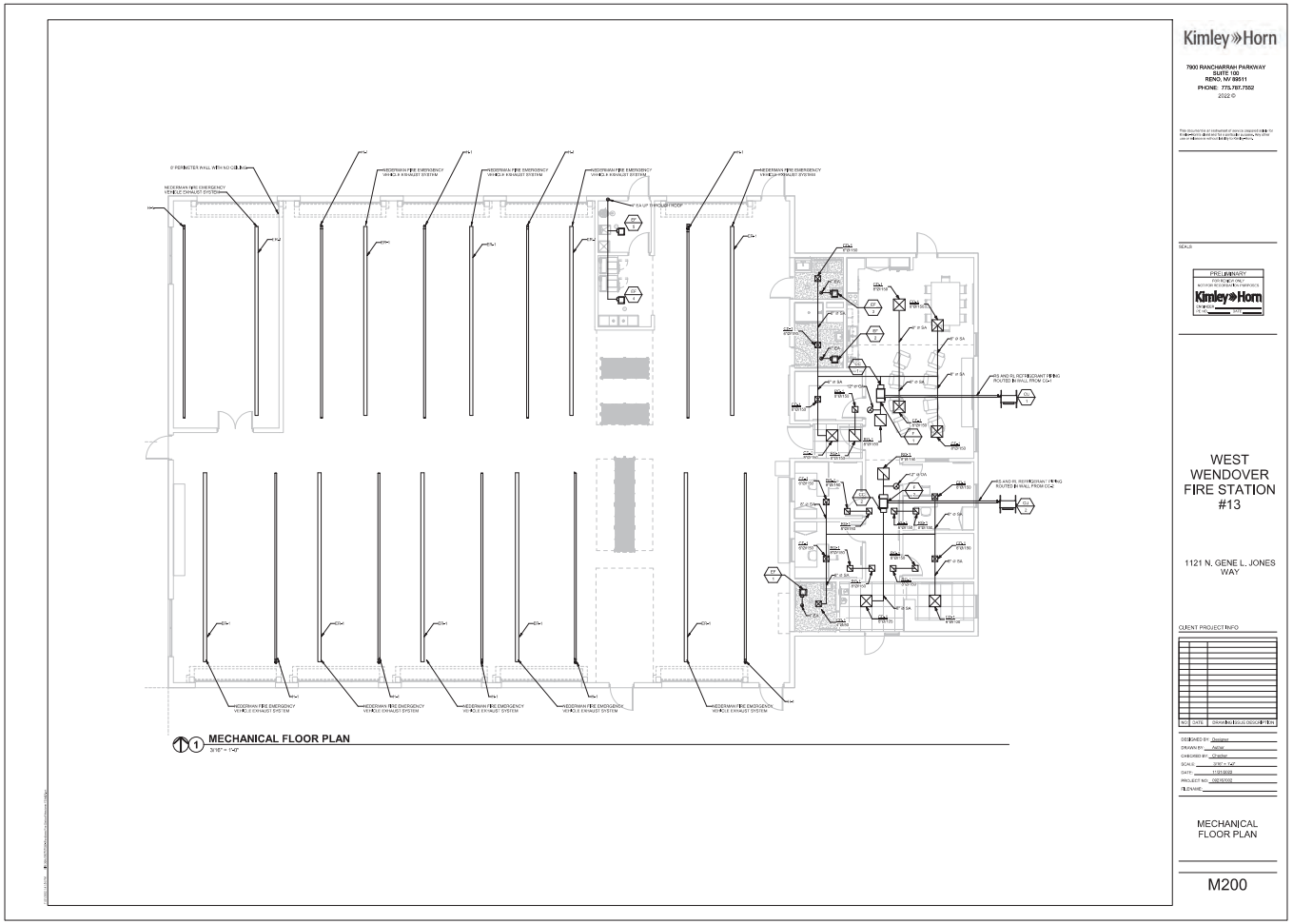

PLUMBING DESIGN - FLOOR PLAN DIAGRAM

NOTE: Refer to digital attachments for full-size drawings

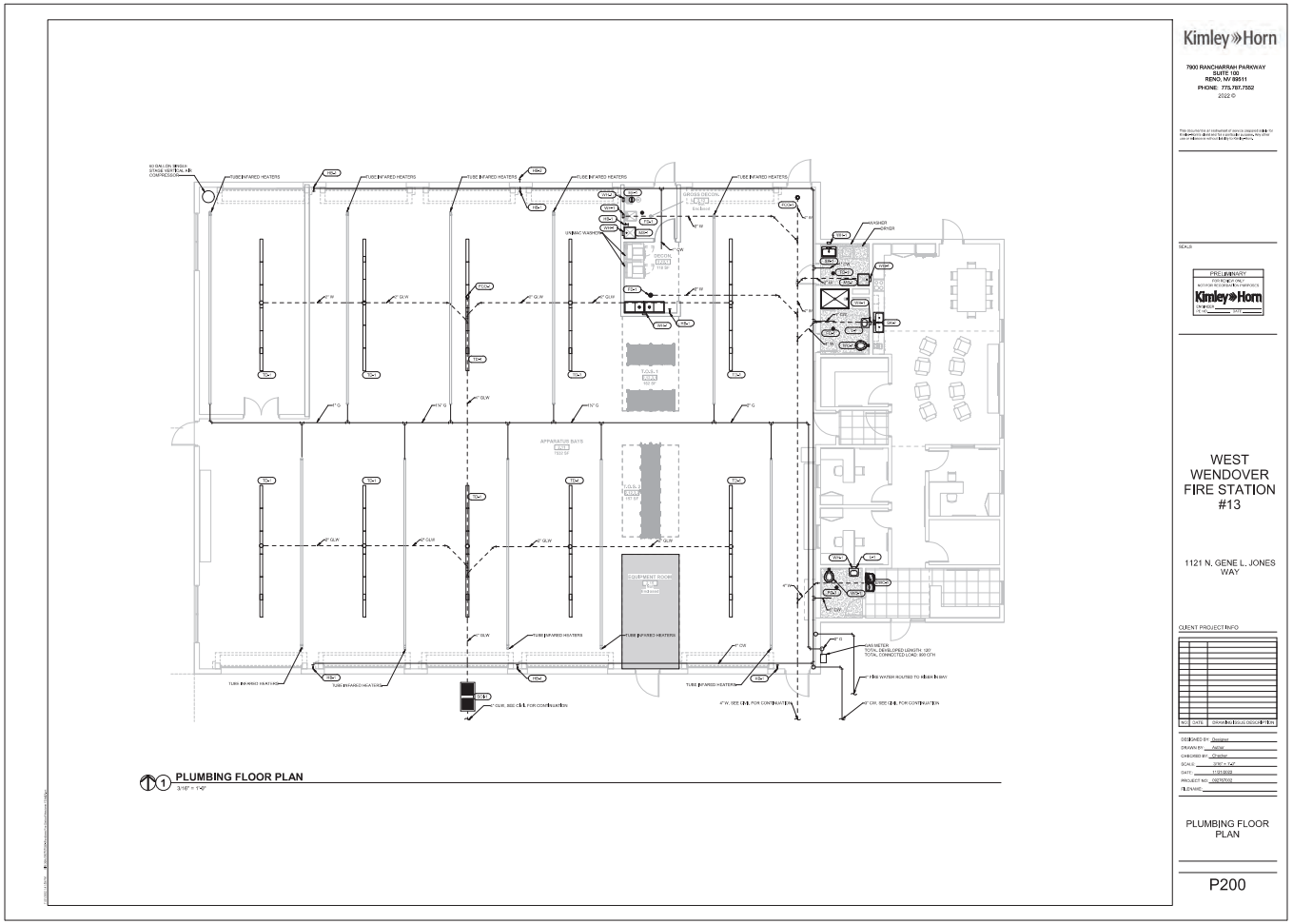

ELECTRICAL DESIGN NARRATIVE

Kimley»Horn

West Wendover Fire Station

Narrative (Electrical)

Overview

The intent of this narrative is to summarize the basis of design of the electrical systems of the fire station and office. The design criteria and electrical systems selection will be discussed.

Design Criteria

- 2018 Nevada Building Code (IBC) with 2018 West Wendover Amendments
- 2018 International Energy Conservation Code (IECC)
- 2018 International Fire Code (IFC)
- 2017 National Electrical Code (NEC)
- 2019 NFPA 72 National Fire Alarm Code

Electrical Distribution

The fire station will have a 600A, 120/208V, 3-phase service. It is anticipated that the local electric utility, Wells Rural Electric Co. (WRE) will provide a 112.5-kVA transformer and that the conduit infrastructure and pad for the transformer are to be provided by the contractor. The electrical system architecture features a main disconnect with meter CTs, a 600A automatic transfer switch (ATS) ahead of the distribution panelboard 'MDP', and a 150-kW emergency generator backing up all building loads. The system includes three (3) branch panelboards, one each for general loads, mechanical and apparatus bay loads, and IT and telecommunications loads featuring an isolated ground.

Further research and utility coordination are required to identify the exact location for the utility interconnection. Additionally, voltage drop and fault current calculations are to be completed at a later stage of design. The current assumptions are that the main switch will require a withstand rating of 42k AIC and the remaining equipment will require 22k AIC ratings.

The apparatus bay will feature electric vehicle service equipment (EVSE). The basis of design for this system is the ChargePoint CPE250. This equipment provides charging capacity of up to 66.5 kW. Further coordination with the end user and what their specific needs may be required to confirm that this is sufficient for their anticipated future need. Please note that this equipment requires a 75-kVA step-up transformer to provide the necessary 480V, 3-phase power at the EVSE inputs. At 120/208V, 3-phase, this is approximately 200A worth of load.

Lighting and Lighting Controls Systems

The lighting systems in the facility will feature the following: industrial high bay fixtures in the apparatus bay; lay-in troffers, surface mounted strip lighting fixtures, and recessed downlights in the office area; wall packs and recessed downlights mounted on the building exterior; and site area pole mounted fixtures on the

exterior. All exterior fixtures shall be full cut off and dark sky compliant. The pole mounted fixtures shall have a maximum mounting height of 20 feet and shall be mounted on a 3-foot pier.

The lighting controls system shall comply with the requirements of the 2018 International Energy Conservation Code (IECC) and will feature an astronomical time clock, occupancy sensors, and photocell control inputs. The lighting in some areas of the building, including the apparatus bay, meet the criteria for exceptions in the code as an emergency operations area. Where feasibility, the lighting controls devices shall be incorporated into the wall-mounted switches. Lighting controls shall include additional interior photocell control input devices to allow for daylight harvesting. Daylighting harvesting zones have been indicated on the schematic lighting plans for reference.

Telecommunications Systems

The fire station features an IT/Communications room which will be equipped with ½" thick plywood to serve as the telecommunications termination board.

This space will house three four-post racks, one of which will house a rack mounted UPS with external maintenance bypass. The sufficiency of the rack space is yet to be determined pending coordination with the end user.

Further research and utility coordination are required to identify the exact location for the utility interconnection and establish the telecommunications demarcation.

Telecommunications devices are shown in the schematic design plans, including wall-mounted data ports and ceiling-mounted wireless access points.

Fire Alarm Systems

The fire station will be equipped with a fire alarm system. It is anticipated that the building will feature a fire sprinkler system and will therefore not require smoke detectors throughout. The office area will be equipped with ceiling mounted notification strobes and horn strobes, as well as a smoke detector mounted above the fire alarm control panel, located in the IT/Communications room. The remote annunciator unit will be mounted near the public entrance to the office space. The egress exit doors in the office and apparatus bay will be equipped with pull stations. The apparatus bay will feature wall-mounted horn strobes, except for the decontamination rooms, which will have ceiling-mounted strobes. The fire riser will require flow and tamper switches.

It is anticipated that the fire alarm system will require two (2) dedicated POTS lines or two (2) cellular modules or some combination of the two for dial-out.

End of Fire Station Electrical Basis of Design Narrative

ELECTRICAL DESIGN - SITE PLAN DIAGRAM

NOTE: Refer to digital attachments for full-size drawings

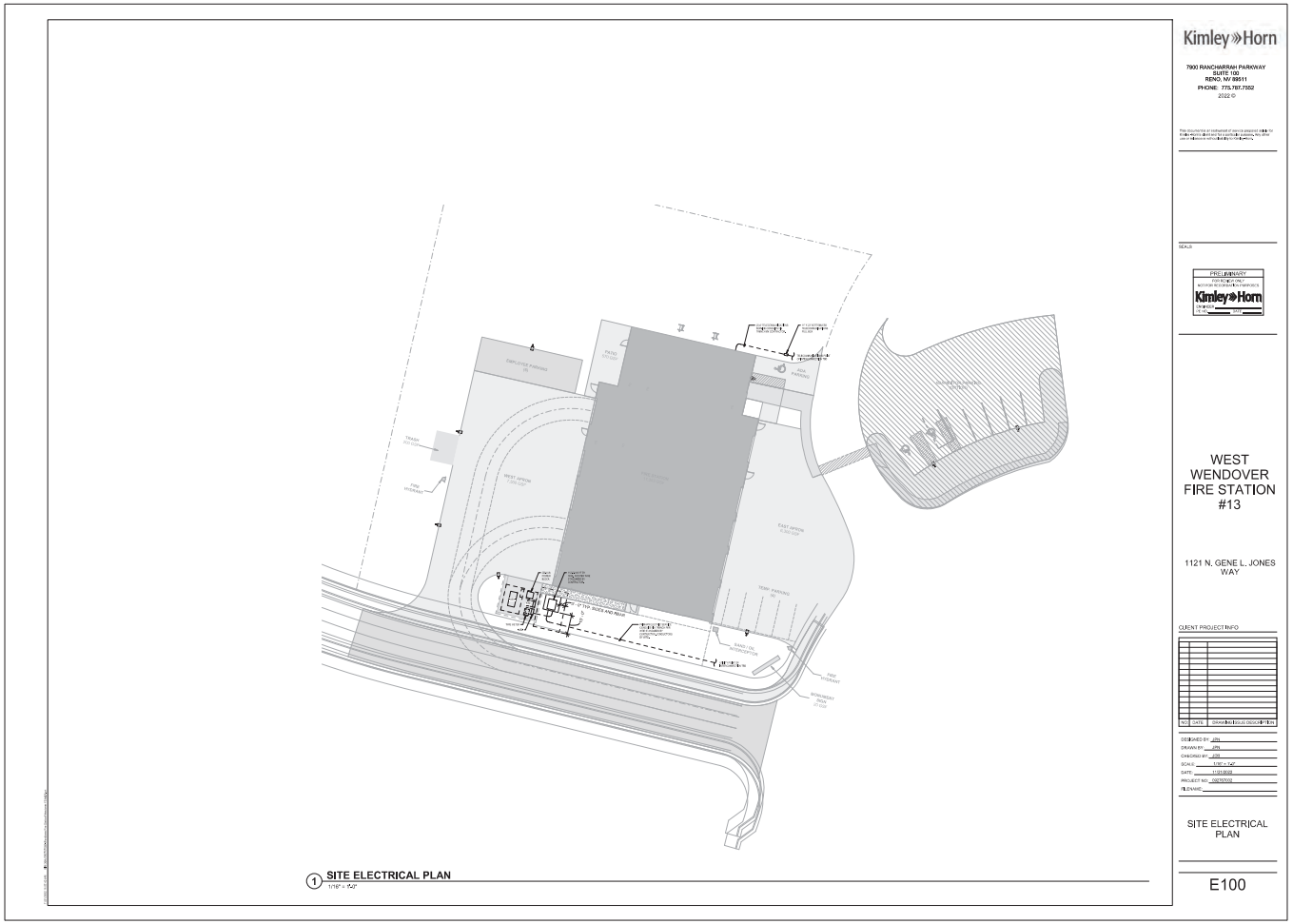

ELECTRICAL DESIGN - POWER PLAN DIAGRAM

NOTE: Refer to digital attachments for full-size drawings

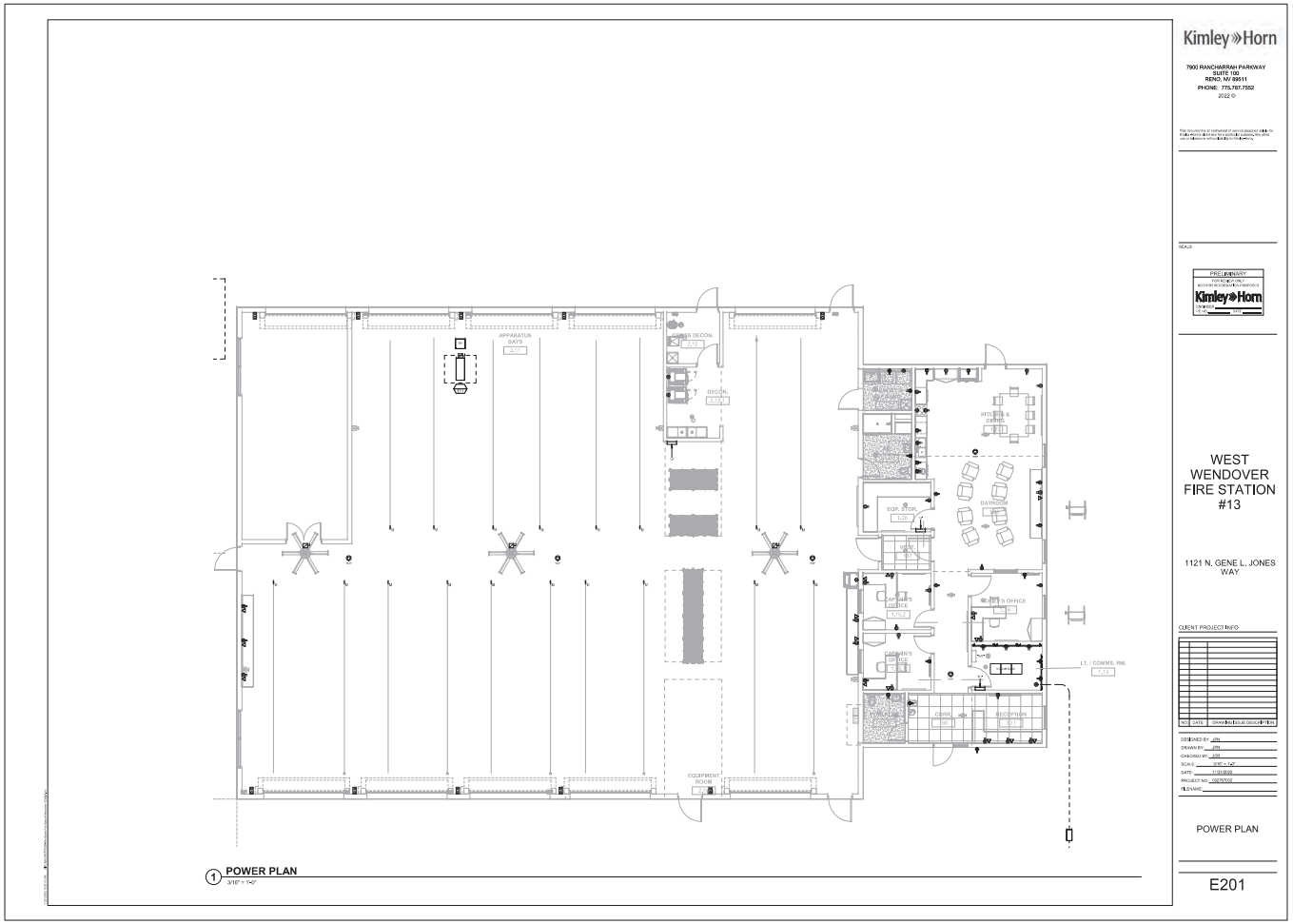

ELECTRICAL DESIGN - LIGHTING PLAN DIAGRAM

NOTE: Refer to digital attachments for full-size drawings

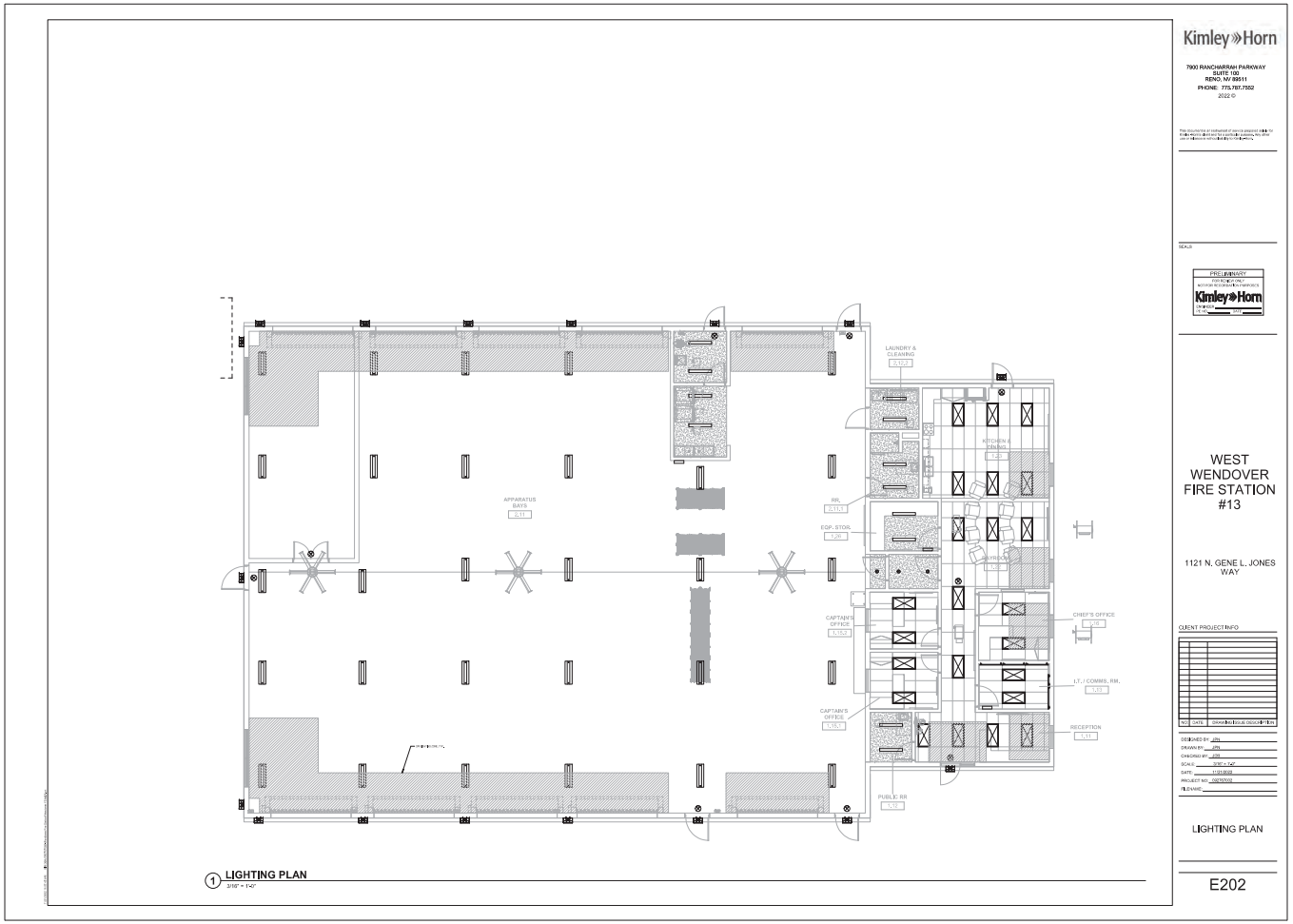

ELECTRICAL DESIGN - FIRE ALARM PLAN DIAGRAM

NOTE: Refer to digital attachments for full-size drawings

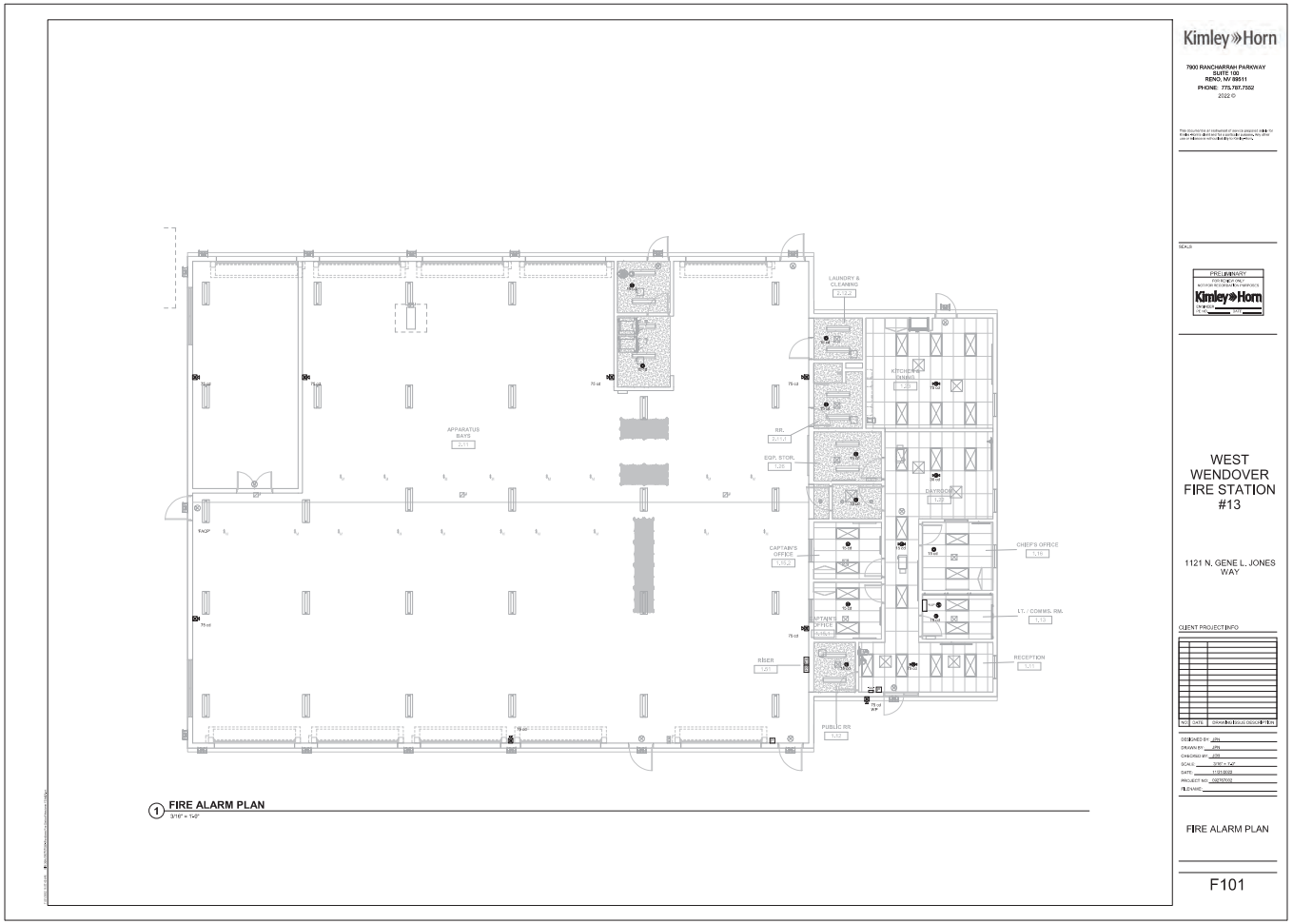

5.0
Sustainability Objective Checklist

LEED v4.1 BD+C
Project Checklist

Project Name: West Wendover FS #13
Date: 21-Nov-22

Y	?	N			
1			Credit	Integrative Process	1

2	6	24	**Location and Transportation**		16
0	0	16	Credit	LEED for Neighborhood Development Location	16
0	0	1	Credit	Sensitive Land Protection	1
0	0	2	Credit	High Priority Site and Equitable Development	2
0	2	3	Credit	Surrounding Density and Diverse Uses	5
1	2	2	Credit	Access to Quality Transit	5
1	0	0	Credit	Bicycle Facilities	1
0	1	0	Credit	Reduced Parking Footprint	1
0	1	0	Credit	Electric Vehicles	1

5	5	0	**Sustainable Sites**		10
Y			Prereq	Construction Activity Pollution Prevention	Required
1	0	0	Credit	Site Assessment	1
2	0	0	Credit	Protect or Restore Habitat	2
0	1	0	Credit	Open Space	1
0	3	0	Credit	Rainwater Management	3
1	1	0	Credit	Heat Island Reduction	2
1	0	0	Credit	Light Pollution Reduction	1

4	5	2	**Water Efficiency**		11
Y			Prereq	Outdoor Water Use Reduction	Required
Y			Prereq	Indoor Water Use Reduction	Required
Y			Prereq	Building-Level Water Metering	Required
1	1	0	Credit	Outdoor Water Use Reduction	2
2	4	0	Credit	Indoor Water Use Reduction	6
0	0	2	Credit	Optimize Process Water Use	2
1	0	0	Credit	Water Metering	1

4	26	3	**Energy and Atmosphere**		33
Y			Prereq	Fundamental Commissioning and Verification	Required
Y			Prereq	Minimum Energy Performance	Required
Y			Prereq	Building-Level Energy Metering	Required
Y			Prereq	Fundamental Refrigerant Management	Required
0	6	0	Credit	Enhanced Commissioning	6
4	14	0	Credit	Optimize Energy Performance	18
0	1	0	Credit	Advanced Energy Metering	1
0	0	2	Credit	Grid Harmonization	2
0	5	0	Credit	Renewable Energy	5
0	0	1	Credit	Enhanced Refrigerant Management	1

2	4	7	**Materials and Resources**		13
Y			Prereq	Storage and Collection of Recyclables	Required
0	0	5	Credit	Building Life-Cycle Impact Reduction	5
0	2	0	Credit	Environmental Product Declarations	2
0	0	2	Credit	Sourcing of Raw Materials	2
1	1	0	Credit	Material Ingredients	2
1	1	0	Credit	Construction and Demolition Waste Management	2

8	8	0	**Indoor Environmental Quality**		16
Y			Prereq	Minimum Indoor Air Quality Performance	Required
Y			Prereq	Environmental Tobacco Smoke Control	Required
1	1	0	Credit	Enhanced Indoor Air Quality Strategies	2
2	1	0	Credit	Low-Emitting Materials	3
1	0	0	Credit	Construction Indoor Air Quality Management Plan	1
1	1	0	Credit	Indoor Air Quality Assessment	2
1	0	0	Credit	Thermal Comfort	1
1	1	0	Credit	Interior Lighting	2
1	2	0	Credit	Daylight	3
0	1	0	Credit	Quality Views	1
0	1	0	Credit	Acoustic Performance	1

2	4	0	**Innovation**		6
1	4	0	Credit	Innovation	5
1	0	0	Credit	LEED Accredited Professional	1

1	3	0	**Regional Priority**		4
1	0	0	Credit	Regional Priority: Specific Credit	1
0	1	0	Credit	Regional Priority: Specific Credit	1
0	1	0	Credit	Regional Priority: Specific Credit	1
0	1	0	Credit	Regional Priority: Specific Credit	1

29	61	36	**TOTALS**	Possible Points:	110

ed: 40 to 49 points, **Silver:** 50 to 59 points, **Gold:** 60 to 79 points, **Platinum:** 80

6.0
Target Budget

West Wendover Fire Station 13

Conceptual Programming Estimate

Prepared on: *10-Jan-23*

#	Description		Base Price	ALTERNATES (NOT INCLUDED IN ALT #1 Cross Street Visitor Parking	ALT #2 Access Road Expansion
	GENERAL		**$403,624**	**$83**	**$71**
GEN1	General Requirements	CORE	**$134,583**	$0	$0
GEN2	Scaffolding & Equipment	CORE	**$133,474**	$83	$71
GEN3	Waste Management & Cleaning Requirements	CORE	**$135,567**	$0	$0
	DEMOLITION / OFF-SITE INFRASTRUCTURE		**$33,750**	**$0**	**$0**
5	Major Off-Site Improvements	CORE	**$33,750**	$0	$0
	SITE WORK (ROUGH)		**$1,012,873**	**$74,481**	**$72,370**
7	Horizontal Survey & Staking	CORE	**$12,730**	$1,229	$1,053
8	Earthwork	CORE	**$554,853**	$56,080	$69,351
9	Utilities	CORE	**$336,640**	$11,340	$0
11	Dust Control	CORE	**$90,155**	$4,172	$486
12	Storm Water Management	CORE	**$18,494**	$1,661	$1,480
	SITE WORK (FINISH)		**$549,460**	**$201,158**	**$174,312**
14	Asphalt Paving	CORE	**$25,507**	$168,683	$118,776
15	Site Signage, Striping, & Parking Accessories	CORE	**$3,887**	$2,263	$887
16	Landscaping & Irrigation	CORE	**$60,252**	$18,027	$0
18	Flag Pole	CORE	**$7,500**	$0	$0
23	Fencing & Gates	CORE	**$23,130**	$0	$0
24	Site Concrete	CORE	**$374,492**	$12,185	$54,650
25	Site Masonry	CORE	**$37,744**	$0	$0
	STRUCTURE		**$1,138,500**	**$0**	**$0**
28	Structure Allowance	CORE	**$1,138,500**	$0	$0
	ENCLOSURE		**$864,356**	**$131**	**$345**
38	Moisture Protection	CORE	**$47,224**	$0	$0
40	Caulking & Sealants	CORE	**$18,083**	$131	$345
44	Thermal Insulation	CORE	**$36,400**	$0	$0
48	Exterior Finish Allowance	CORE	**$145,600**	$0	$0
52	Exterior Aluminum, Glass, & Glazing	CORE	**$27,500**	$0	$0
53	Skylights	CORE	**$39,250**	$0	$0
54	Special Doors	CORE	**$550,300**	$0	$0
	INTERIOR FINISHES		**$721,240**	**$0**	**$0**
55	Temporary Requirements for Phasing / Quality Control	CORE	**$19,924**	$0	$0
56	Doors & Casework Allowance	CORE	**$227,700**	$0	$0
60	Framing, Drywall, & Paint Allowance	CORE	**$261,855**	$0	$0
62	Ceiling Finish Allowance	CORE	**$40,986**	$0	$0
65	Flooring Finish Allowance	CORE	**$170,775**	$0	$0
	SPECIALTIES		**$61,479**	**$0**	**$0**
74	Building Specialties Allowance	CORE	**$61,479**	$0	$0
	EQUIPMENT		**$438,436**	**$0**	**$0**
86	Residential Equipment & Appliances	CORE	**$70,132**	$0	$0
89	Fire Station Equipment	CORE	**$368,305**	$0	$0
	MEP SYSTEMS		**$2,224,767**	**$5,351**	**$0**
97	Fire Suppression System	CORE	**$62,618**	$0	$0
98	Plumbing Systems	CORE	**$464,729**	$0	$0
100	HVAC Systems	CORE	**$691,960**	$0	$0
102	Test & Balance	CORE	**$13,662**	$0	$0
103	Electrical Systems	CORE	**$824,152**	$5,351	$0
104	Temporary Power & Lighting	CORE	**$17,647**	$0	$0
108	Emergency & Pedestrian Crossing Signal	CORE	**$150,000**	$0	$0
	UNIQUE FEATURES OF WORK		**$0**	**$0**	**$0**
	Subtotal		**$7,448,486**	**$281,204**	**$247,098**

	CONTINGENCIES & ALLOWANCES	BASED ON	SUB TOTAL		
15.0%	Design & Estimating Contingency	$7,448,486	$1,117,273	$42,181	$37,065
12.0%	Market & Escalation Contingency	$8,565,759	$1,027,892	$33,744	$29,652
2.5%	Contractor Construction Contingency	$9,593,651	$239,842	$7,030	$6,177
0.0%	Owner Contingency	$11,776,699	$0	$0	$0
	Subtotal		**$9,833,493**	**$364,159**	**$319,992**

RATE	GENERAL CONDITIONS	BASED ON	SUB TOTAL
LS	General Conditions	12 Months	$1,052,619
LS	Warranty	*$9,833,493*	$44,251
	Subtotal		**$10,930,363**

RATE	INSURANCE, BONDS, AND BUILDERS RISK	BASED ON	SUB TOTAL
1.00%	General Liability	$11,776,699	$117,767
1.38%	Subcontractor Default Insurance	$9,833,493	$135,703
0.67%	Payment and Performance Bond	$11,776,699	$78,904
LS	Builders Risk Insurance		$6,831
	Subtotal		**$11,269,568**	**$417,341**	**$366,723**

RATE	CONTRACTOR'S FEE	BASED ON	SUB TOTAL	SUB TOTAL	SUB TOTAL
4.50%	Construction Manager At Risk Fee	$11,269,568	$507,131	**$18,780**	**$16,503**
	Subtotal		**$11,776,699**	**$436,121**	**$383,226**
		Current Working Estimate		**ALT #1 Cross Street Visitor**	**ALT #2 Access Road Expansion**
	Estimate Total	**$11,776,699**		**$436,121**	**$383,226**

	Soft Cost (Not Included)	Based On	Total Value
8.0%	A/E Design & Preconstruction Fees	$9,833,493	$786,679
	Survey, Geotech, Enviro, Etc.	1 LS	$30,000
2.0%	Permits and Fees	$11,776,699	$235,534
	FF&E Allowance (Other than Fire Station Equipment)	1 LS	$100,000
2.5%	Owner Contingency	$11,776,699	$294,417

7.0
Site Logistics Plan

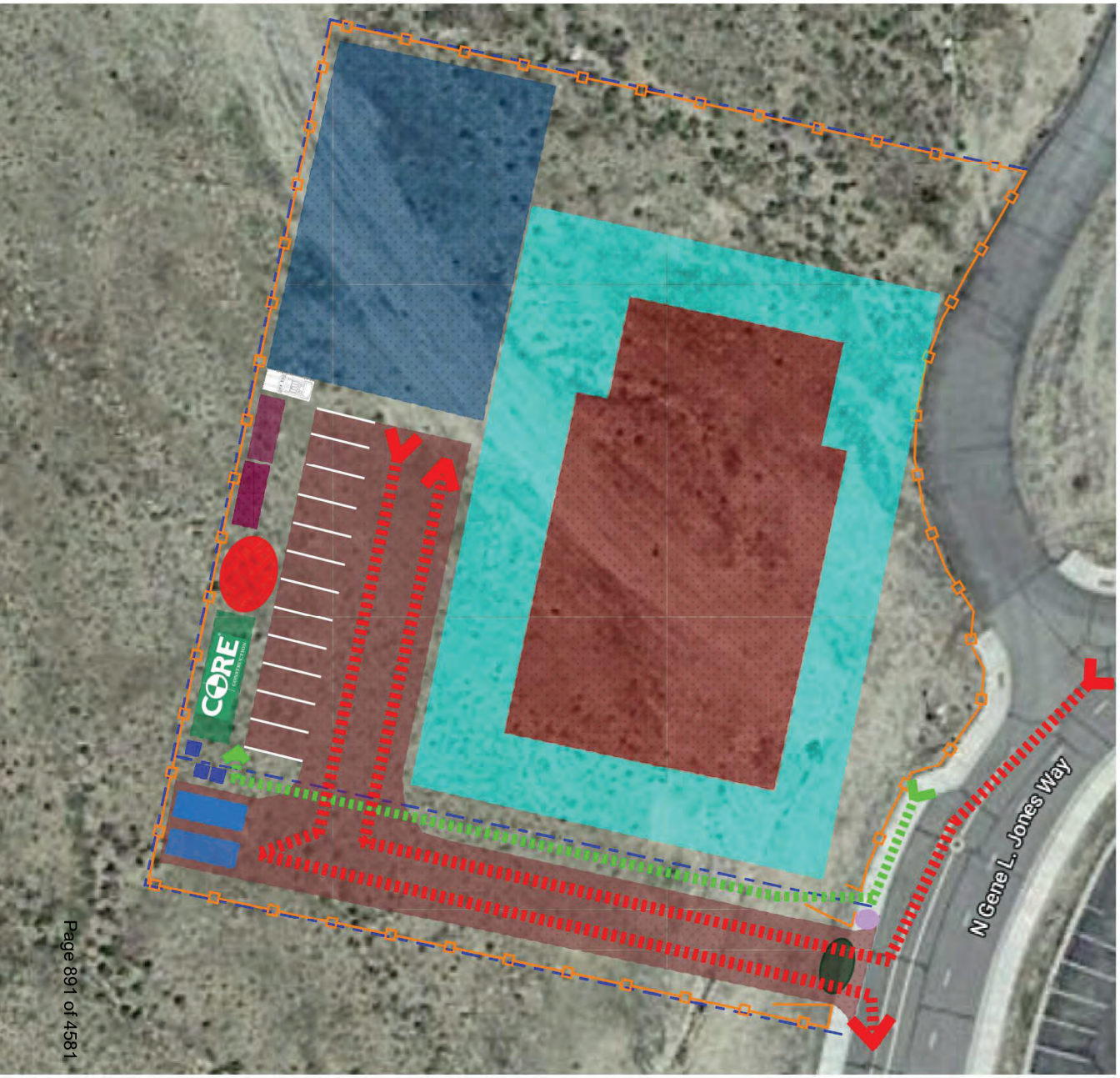

Const. Fence

Vehicular Gate

Sub Pedestrian Access

Sub Pedestrian Route

Construction Access

Laydown / Const Staging

Waste Sorting Dumpster

Construction Trailer

Construction Toilets

Trackout Pad/Access

Material Storage

Emergency Evac/Staging

Heavy Equip Storage

Conex Storage

Station Footprint

CONSTRUCTION LOGISTICS PLAN

8.0
Preliminary Schedule

WEST WENDOVER FIRE STATION - Full Schedule

ID	Task Name	Duration	Start	Finish
1	**WEST WENDOVER FIRE STATION**	**799 days**	**Wed 10/20/21**	**Tue 12/10/24**
2	**Preconstruction Phase**	**479 days**	**Wed 10/20/21**	**Wed 9/6/23**
3	**Project Award**	**141 days**	**Wed 10/20/21**	**Tue 5/10/22**
4	City Council Approval / Notice of Award	10 days	Wed 10/20/21	Tue 11/2/21
5	Reciept of Executed Contract	130 days	Wed 11/3/21	Mon 5/9/22
6	Reciept of Notice to Proceed	1 day	Tue 5/10/22	Tue 5/10/22
11	**Programming Phase**	**83 days**	**Wed 5/25/22**	**Wed 9/21/22**
12	OAC Mtg - Kick Off	1 day	Wed 5/25/22	Wed 5/25/22
13	Programming Questionaire	6 days	Tue 5/31/22	Tue 6/7/22
14	OAC Mtg - Programming Questionaire Review	1 day	Wed 6/8/22	Wed 6/8/22
15	Programming /Adjacency Diagram Develop.	53 days	Thu 6/9/22	Tue 8/23/22
16	OAC Mtg - Programming/Adj Diagram Present	1 day	Wed 8/24/22	Wed 8/24/22
17	CWW Adjacency Diagram Rvw/Comment	19 days	Thu 8/25/22	Wed 9/21/22
18	*OAC Mtg - CWW Comment Review/Approvals*	*0 days*	*Wed 9/21/22*	*Wed 9/21/22*
19	**Schematic Design Phase (Phase 1A)**	**54 days**	**Thu 9/22/22**	**Thu 12/8/22**
20	SD Development/Incorp Rvw Comments	10 days	Thu 9/22/22	Wed 10/5/22
21	OAC Mtg - Schematic Design Status Review	1 day	Thu 10/6/22	Thu 10/6/22
22	Schematic Design Development	10 days	Fri 10/7/22	Thu 10/20/22
23	OAC Mtg - Schematic Design Status Review	1 day	Fri 10/21/22	Fri 10/21/22
24	Schematic Design Development	5 days	Mon 10/24/22	Fri 10/28/22
25	Submit SD Progress Set to CORE for Pricing	1 day	Mon 10/31/22	Mon 10/31/22
26	Schematic Design Development Continued	5 days	Mon 10/31/22	Fri 11/4/22
29	CORE Prelim SD Pricing w/Trade Partners	15 days	Tue 11/1/22	Mon 11/21/22
27	OAC Mtg - Schematic Design Status	1 day	Mon 11/7/22	Mon 11/7/22
28	Schematic Design Development	10 days	Tue 11/8/22	Mon 11/21/22
30	OAC Mtg - SD Estimate Presentation	1 day	Tue 11/22/22	Tue 11/22/22
31	CWW - SD Submittal Review	10 days	Wed 11/23/22	Thu 12/8/22
32	USDA - SD Submittal Review	10 days	Wed 11/23/22	Thu 12/8/22
33	*OAC Mtg - CWW/USDA SD Approval*	*0 days*	*Thu 12/8/22*	*Thu 12/8/22*
34	**Design Development Phase (Phase 1B)**	**94 days**	**Thu 12/8/22**	**Wed 4/19/23**

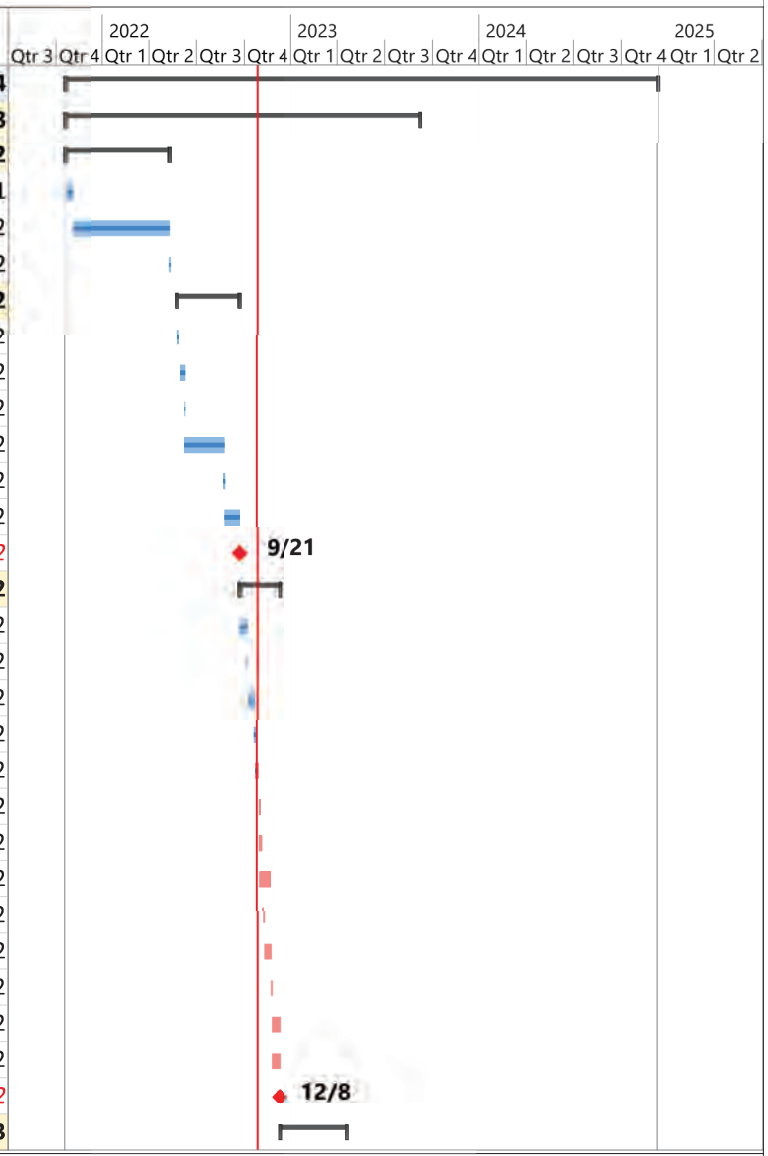

Task Summary Deadline Progress
Milestone Project Summary Critical

WEST WENDOVER FIRE STATION - Full Schedule

ID	Task Name	Duration	Start	Finish
35	*Receive NTP for Phase 1B Services*	*0 days*	*Thu 12/8/22*	*Thu 12/8/22*
37	*OAC Mtg - Phase 1B Kick Off Mtg*	*0 days*	*Thu 12/8/22*	*Thu 12/8/22*
36	Prepare/Receive Ph 1B Contract Amendment	8 days	Fri 12/9/22	Tue 12/20/22
38	Design Development	20 days	Fri 12/9/22	Thu 1/5/23
39	OAC Mtg - Design Development Review	1 day	Fri 1/6/23	Fri 1/6/23
40	Design Development Cont.	15 days	Mon 1/9/23	Fri 1/27/23
41	OAC Mtg - Design Development Presentation	1 day	Mon 1/30/23	Mon 1/30/23
42	CWW Design Development Review	5 days	Tue 1/31/23	Mon 2/6/23
43	OAC Mtg - City Comment Review	1 day	Tue 2/7/23	Tue 2/7/23
44	Design Development Adjustments	5 days	Wed 2/8/23	Tue 2/14/23
45	GMP Bidding, Review, and Proposal Submittal	35 days	Wed 2/15/23	Tue 4/4/23
46	OAC Mtg DD Estimate Submittal	1 day	Wed 4/5/23	Wed 4/5/23
47	CWW Phase 1B Submittal Review	10 days	Thu 4/6/23	Wed 4/19/23
48	USDA Phase 1B Submittal Review	10 days	Thu 4/6/23	Wed 4/19/23
49	*OAC Mtg - CWW/USDA Phase 1B Approval*	*0 days*	*Wed 4/19/23*	*Wed 4/19/23*
50	**Construction Document Phase (Phase 2 Final Con Docs & Const)**	**65 days**	**Wed 4/19/23**	**Fri 7/21/23**
51	*Receive NTP for Phase 2 Services*	*0 days*	*Wed 4/19/23*	*Wed 4/19/23*
52	Prep/Receive Ph2 Contract Amendment	27 days	Thu 4/20/23	Fri 5/26/23
53	OAC Mtg Phase 2 Kick-Off	1 day	Thu 4/20/23	Thu 4/20/23
54	Const Doc Development	15 days	Fri 4/21/23	Thu 5/11/23
55	OAC Mtg - Con Doc Status Review	1 day	Tue 5/30/23	Tue 5/30/23
56	Const Doc Development	15 days	Wed 5/31/23	Tue 6/20/23
57	OAC Mtg CD Package Presentation	1 day	Wed 6/21/23	Wed 6/21/23
58	CWW CD Review	10 days	Thu 6/22/23	Thu 7/6/23
59	OAC CWW CD Package Comment Review	1 day	Fri 7/7/23	Fri 7/7/23
60	Const Doc Adjustments	4 days	Mon 7/10/23	Thu 7/13/23

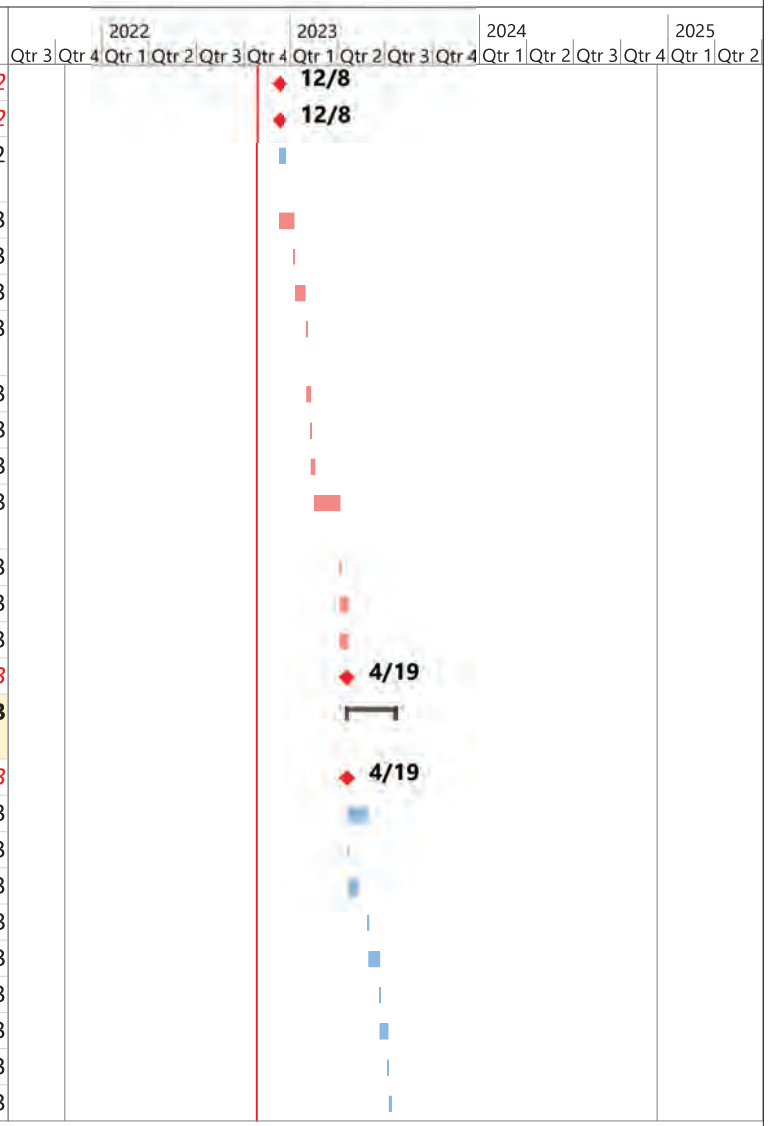

Task Summary Deadline Progress

Milestone Project Summary Critical

WEST WENDOVER FIRE STATION - Full Schedule

ID	Task Name	Duration	Start	Finish
61	OAC Mtg - CD Pkg Presentation	1 day	Fri 7/14/23	Fri 7/14/23
62	CWW Review of CD Pkg	5 days	Mon 7/17/23	Fri 7/21/23
63	USDA Review of CD Package	5 days	Mon 7/17/23	Fri 7/21/23
64	*CWW USDA Construction Doc Approval*	*0 days*	*Fri 7/21/23*	*Fri 7/21/23*
65	**Plan Check Review Process**	**37 days**	**Mon 7/17/23**	**Wed 9/6/23**
66	Plan Check Review Submittal	1 day	Mon 7/17/23	Mon 7/17/23
67	Building Department Plan Check Review	15 days	Tue 7/18/23	Mon 8/7/23
68	Fire Marshall Review Process	15 days	Tue 7/18/23	Mon 8/7/23
69	Receive Building Department Review Comments	1 day	Tue 8/8/23	Tue 8/8/23
70	Receive Fire Marshall Review Comments	1 day	Tue 8/8/23	Tue 8/8/23
71	Address Plan Check Review Comments	10 days	Wed 8/9/23	Tue 8/22/23
72	Address Fire Marshall Review Comments	10 days	Wed 8/9/23	Tue 8/22/23
73	Review Comment Revision Approvals	10 days	Wed 8/23/23	Wed 9/6/23
74	*Plan Check Review Approval*	*0 days*	*Wed 9/6/23*	*Wed 9/6/23*
75	**Construction Phase**	**417 days**	**Wed 4/19/23**	**Tue 12/10/24**
76	**Administrative**	**107 days**	**Wed 4/19/23**	**Wed 9/20/23**
77	*Receive Admin NTP to Procure Materials*	*0 days*	*Wed 4/19/23*	*Wed 4/19/23*
80	Execute Subcontracts	5 days	Thu 4/20/23	Wed 4/26/23
78	*Receive Construction NTP*	*0 days*	*Wed 9/6/23*	*Wed 9/6/23*
79	Mobilize	10 days	Thu 9/7/23	Wed 9/20/23
81	**Procurement**	**323 days**	**Mon 4/24/23**	**Tue 7/30/24**
82	**Procure Submittals**	**53 days**	**Mon 4/24/23**	**Fri 7/7/23**
105	**Procure Deferred Submittals**	**40 days**	**Thu 4/27/23**	**Thu 6/22/23**
109	**Submittal Review**	**58 days**	**Mon 5/1/23**	**Fri 7/21/23**
135	**Procure Materials**	**308 days**	**Mon 5/15/23**	**Tue 7/30/24**
131	**Review Deferred Submittals**	**15 days**	**Fri 6/23/23**	**Fri 7/14/23**
158	**Off-Site Construction**	**36 days**	**Thu 9/21/23**	**Thu 11/9/23**
164	**Rough Site Construction**	**93 days**	**Thu 9/21/23**	**Fri 2/2/24**
178	**Building Construction**	**277 days**	**Tue 10/10/23**	**Fri 11/8/24**

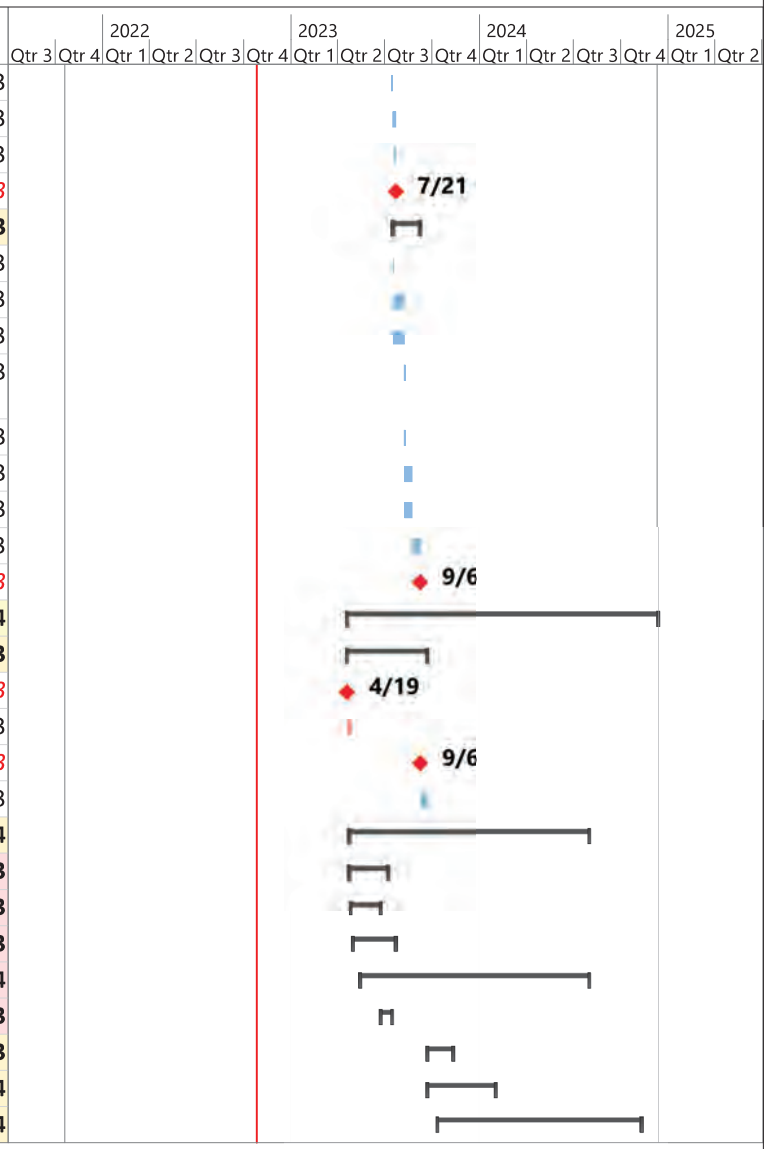

Task Summary Deadline Progress
Milestone Project Summary Critical

WEST WENDOVER FIRE STATION - Full Schedule

ID	Task Name	Duration	Start	Finish
179	**Structure**	**111 days**	**Tue 10/10/23**	**Mon 3/18/24**
194	**Enclosure**	**40 days**	**Tue 3/19/24**	**Mon 5/13/24**
204	**Interior**	**166 days**	**Tue 3/19/24**	**Fri 11/8/24**
205	MEP Overhead Rough	10 days	Tue 3/19/24	Mon 4/1/24
206	Framing	5 days	Tue 4/2/24	Mon 4/8/24
207	MEP Rough In Walls	10 days	Tue 4/9/24	Mon 4/22/24
208	Insulation	5 days	Tue 4/23/24	Mon 4/29/24
209	Drywall	5 days	Tue 4/30/24	Mon 5/6/24
210	Tape & Texture	10 days	Tue 5/7/24	Mon 5/20/24
211	Paint	5 days	Tue 5/21/24	Tue 5/28/24
212	Polish Concrete	10 days	Wed 5/29/24	Tue 6/11/24
213	Tiling	5 days	Wed 6/5/24	Tue 6/11/24
214	Ceiling Grid	5 days	Wed 6/12/24	Tue 6/18/24
215	Casework	10 days	Wed 6/19/24	Tue 7/2/24
216	MEP Trim	10 days	Wed 7/3/24	Wed 7/17/24
217	Specialties, Accessories, & Equipment	5 days	Thu 7/18/24	Wed 7/24/24
218	Flooring	10 days	Thu 10/3/24	Wed 10/16/24
219	Doors & Hardware	5 days	Thu 10/17/24	Wed 10/23/24
220	Construction Clean	5 days	Thu 10/24/24	Wed 10/30/24
221	Pre-Punch	5 days	Thu 10/31/24	Wed 11/6/24
222	Final Clean	5 days	Thu 10/31/24	Wed 11/6/24
223	Create Punch List	2 days	Thu 11/7/24	Fri 11/8/24
224	**Building Systems**	**154 days**	**Tue 4/2/24**	**Wed 11/6/24**
225	Set Mechanical Equipment	5 days	Tue 4/2/24	Mon 4/8/24
230	Install Generator	10 days	Tue 6/18/24	Mon 7/1/24
226	Set Electrical Equipment	5 days	Wed 7/31/24	Tue 8/6/24
227	Electric Single Line	10 days	Wed 8/7/24	Tue 8/20/24
228	*Meter Tag Inspection*	*0 days*	*Tue 8/20/24*	*Tue 8/20/24*
229	Utility Company Energize Building	30 days	Wed 8/21/24	Wed 10/2/24
231	*Permanent Power Complete*	*0 days*	*Wed 10/2/24*	*Wed 10/2/24*

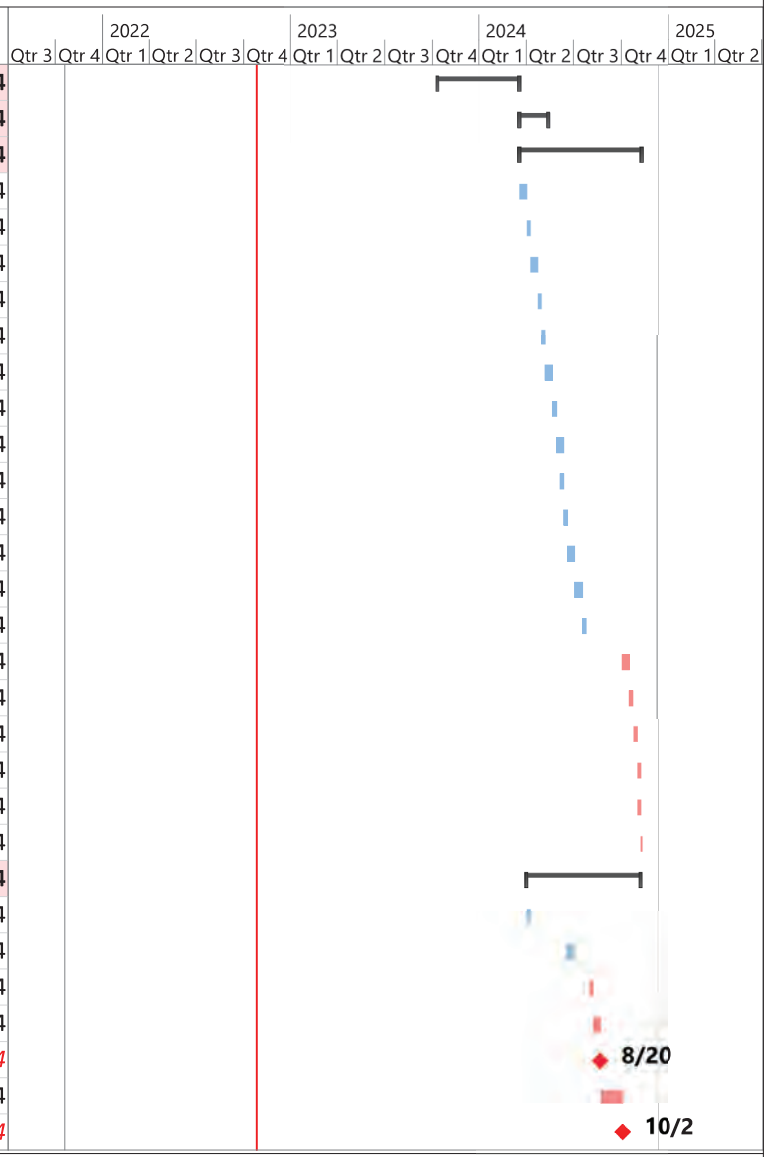

Task Summary Deadline Progress

Milestone Project Summary Critical

WEST WENDOVER FIRE STATION - Full Schedule

ID	Task Name	Duration	Start	Finish
232	HVAC Start Up	10 days	Thu 10/3/24	Wed 10/16/24
233	Test and Balance	10 days	Thu 10/24/24	Wed 11/6/24
234	**Finish Site Construction**	**60 days**	**Tue 5/14/24**	**Wed 8/7/24**
246	*Substantial Completion*	*0 days*	*Fri 11/8/24*	*Fri 11/8/24*
247	Complete Punch List	10 days	Mon 11/11/24	Mon 11/25/24
248	Contractual Close Out	20 days	Mon 11/11/24	Tue 12/10/24
249	*Final Completion*	*0 days*	*Tue 12/10/24*	*Tue 12/10/24*

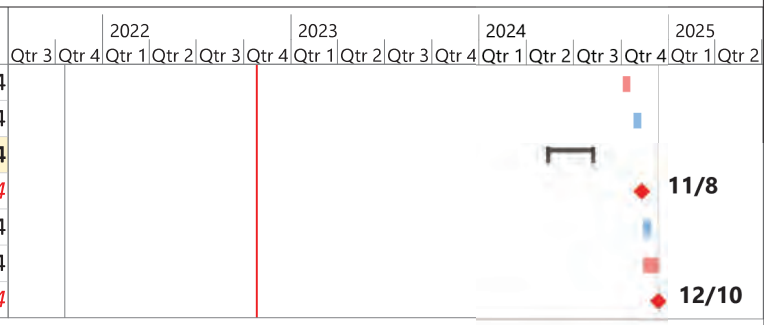

Task Summary Deadline Progress
Milestone Project Summary Critical



CORE

5330 Reno Corporate Drive
Reno, NV 89511

PRELIMINARY ARCHITECTURAL FEASIBILITY REPORT CITY OF WEST WENDOVER

FIRE STATION



JULY 2018

AQUA ENGINEERING

TABLE OF CONTENTS

SECTION A - INTRODUCTION AND NEED FOR THE FACILITY 1
1.1. Introduction 1
1.2. Need for Facility 1

SECTION B - EXISTING FACILITIES 2
2.1. Existing Facilities 2

SECTION C – PROPOSED FACILITY 3
3.1. Proposed Facility 3

SECTION D – BUILDING SITES 8
4.1. Amount of Land Required 8
4.2. Location - Alternate Locations 8
4.3. Site Plan 8
4.4. Site Suitability 8

SECTION E – COST ESTIMATE 9
5.1. Development and Construction 9
5.2. Land and Rights 10
5.3. Legal 10
5.4. Architect Fees 10
5.5. Interest 10
5.6. Equipment 10
5.7. Contingencies 10
5.8. Refinancing 10
5.9. Other 11

SECTION F – ANNUAL OPERATING BUDGET 12
6.1. Income 12
6.2. Operation and Maintenance Costs 12

SECTION G – MAPS, DRAWINGS, SKETCHES, AND PHOTOGRAPHS 13
7.1. Maps 13
7.2. Drawings and Sketches 13
7.3. Photographs 13

SECTION H – CONSTRUCTION PROBLEMS 16
8.1. Issues That May Affect Project Costs 16

SECTION I – CONCLUSIONS AND RECOMENDATIONS 17
9.1. Alternatives 17
9.2. Preferred Alternative 17
9.3. Recommendation 17

APPENDICES

REFERENCES……APPENDIX A
FINANCIAL ANALYSIS, CITY OF WEST FIRE STATION/ LAND PURCHASE PROJECT……APPENDIX B
MAPS……APPENDIX C

TABLES

Table 1: Fire Station Development and Construction Cost Estimate 9

FIGURES

Figure 1: Project Location Map 4
Figure 2: Site Plan 5
Figure 3: Photo Looking West from Existing City Hall Complex at Proposed Site 13
Figure 4: Photo Looking Northwest from Existing City Hall Complex North Parking Area at Proposed Site 14
Figure 5: Photo Looking North from Gene L Jones Way at Proposed Site 14
Figure 6: Photo Looking East at Proposed Site 15
Figure 7: Photo Looking Southeast Towards Gene L Jones Way at Proposed Site 15

SECTION A - INTRODUCTION AND NEED FOR THE FACILITY

1.1. Introduction

The West Wendover Fire Station was constructed in the 1980's by Elko County when the community was a "Township" under the general jurisdiction of Elko County with a community population of approximately 1,500. In 1991, the City of West Wendover became incorporated and inherited the County's facilities. The City proceeded to grow in population surpassing 5,000 people with the fire station no longer able to meet the space and operational requirements and provide efficient and effective local government operations.

The City of West Wendover – Fire Station (Proposed Facility) is being funded through the United States Department of Agriculture – Rural Development – Community Facilities Direct Loan and Grant Program (USDA). The following preliminary architectural feasibility report (PAR or Report) has been completed per the guidance given in RD Instruction 1942-A provided by USDA.

1.2. Need for Facility

The new West Wendover Fire Station is an important long-term public safety facility for the City of West Wendover. Originally planned in 2007 to be part of the construction of the City Hall Government Complex, due to cost, the Fire Station portion of the project was delayed. The Fire Station was included in the City Hall Government Complex PAR referenced in Appendix A. Now more than a decade later, it is time to complete the construction of the new Fire Station. The need for an adequate sized facility is to provide:

- Suitable number of bays with vehicle and equipment storage and to maintain the West Wendover Fire Department fire apparatuses;
- suitable storage of hand equipment and supplies;
- adequately sized training room(s) for conducting initial and reoccurring training of fire fighter personnel;
- office space for the Department which is currently lacking; and
- capability to house 24-hour personnel with sleeping quarters, kitchen, and related accommodations.

SECTION B - EXISTING FACILITIES

2.1. Existing Facilities

Currently the West Wendover Fire Department is housed in a 4,400 square foot leased facility on approximately 1 acre of property at 975 Wendover Boulevard on the east side of the community. Due to the lack of indoor storage the Fire Department stores it's HazMat response and Mobile Command unit along with additional equipment items outdoors which shorten the life span of the equipment.

Though the 3 short-bay facility was adequate for the needs of the fire service in the early 1980's under Elko County when it was constructed, today the facility is too small, outdated and as noted, the City leases the property/facility from a private holding which limits the options for the City in the long-term.

SECTION C – PROPOSED FACILITY

3.1. Proposed Facility

3.1.1. Description

The proposed facility will be located immediately adjacent and west of the existing West Wendover City Hall as was the original plan in 2007. Refer to Figure 1, Project Location Map, Figure 2, Site Plan, for a visual depiction of the facility. The facility would be connected via a covered walkway. The Fire Station would contain the following:

- Five standard length truck bays with lengths of 70 feet;
- proper safety equipment associated with fire apparatus bays;
- training room(s);
- offices;
- equipment and supplies storage;
- housing quarters;
- associated utilities; and
- paved access (ingress/egress).

3.1.2. Service Area

The service area for the Fire Station facility will include the City of West Wendover proper (approximately 7 square miles). Additionally under Mutual Aid Agreements, the West Wendover Fire Department responds to needs of eastern Elko County, Nevada and western Utah which includes: City of Wendover, Utah; Wendover Airport; and western Tooele County.

3.1.3. Projected Growth and Economy

Though the population for the West Wendover area has remained generally stable over the last two decades with limited growth, it is expected with new commercial and industrial investment which began in 2016 that the City will experience an annual growth rate of 2 to 3% over the next decade.

West Wendover's economy is based on tourism/gaming and mining business activities. In this regard, taxes and charges for services have been increasing over the last several years and with new commercial developments complete over the past year which added

SECTION 7

SECTION 8

SECTION 9

SECTION 10

SECTION 15

SECTION 16

SECTION 17

SECTION 18

PROJECT LOCATION

CITY BOUNDARY

I-80 West Bound

I-80 East Bound

Wendover Boulevard

Exit 405

North Gate Jones Way

Pueblo

Wells Avenue

Florence Way

Railroad

Airport Way

Scable Road

450 South

Aria Blvd

Wendover Blvd

Camper Dr

Taxiway

Runway 16-34

Runway 3-21

PCL1

PCL2

PCL3

LEGEND

- RESIDENTIAL DISTRICTS
- LOCAL COMMERCIAL DISTRICT
- TOURISM & ENTERTAINMENT DISTRICT
- COMMERCIAL / INDUSTRIAL DISTRICTS

NOTE: ALL SECTIONS ARE LOCATED IN TOWNSHIP 33 NORTH, RANGE 70 EAST, MOUNT DIABLO BASE AND MERIDIAN.

City of West Wendover
Current Population 4,685
Wendover Area Population
Approximately 6,000

MAGNETIC

0 750 1500 2250
Scale in Feet

DRAWING IS TO SCALE IF BAR MEASURES:
1" = FULL SCALE
1/2" = HALF SCALE

NO.	DATE	DESIGN	DRAWN	CHECKED
ORIGINAL				
A	7/14/18	SGS	SGS	SGS

REVISIONS

CITY OF WEST WENDOVER

FIRE STATION

PROJECT LOCATION MAP

AQUA ENGINEERING
533 W. 2600 S, SUITE 275, BOUNTIFUL, UT 84010
PHONE (801) 299-1327 FAX (801) 299-0155

FIGURE: 1

KRB 07/16/2018 W:\Wendover\Special Projects\Fire Station 2018\Drawings\CITY WIDE MAP.dwg

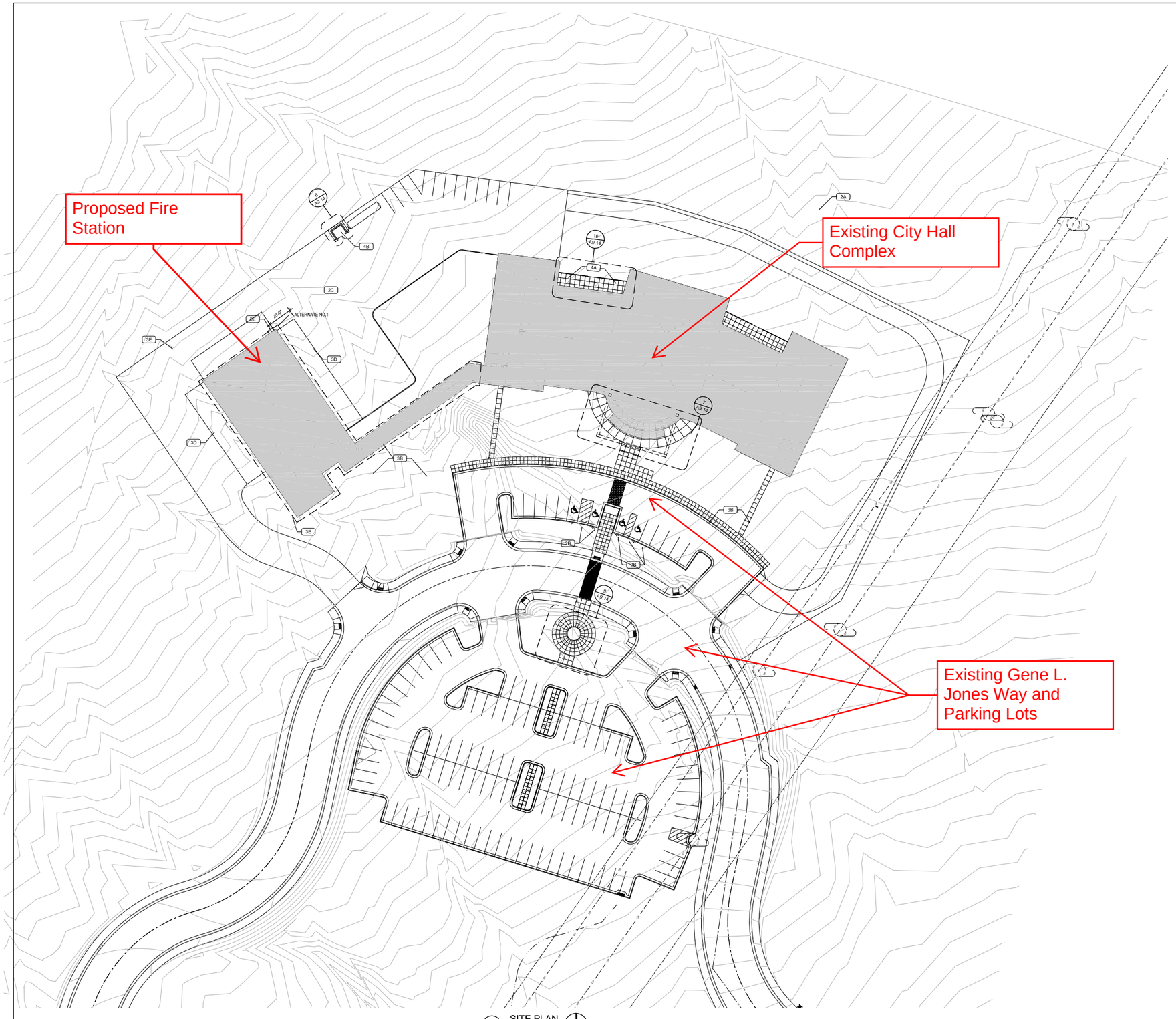

1 SITE PLAN
SCALE: 1" = 30'
NORTH

KEYED NOTES

DIVISION 2 - SITEWORK
- 2A GRAVELLED ROAD
- 2B H.C. PARKING SIGN - SEE DETAIL
- 2C ASPHALT PAVING

DIVISION 3 - CONCRETE
- 3H CONC. SIDEWALK
- 3D CONC. APRON
- 3E CONC. STOOP

DIVISION 4 - MASONRY
- 4A SCREEN WALL - SEE DETAIL
- 4B DUMPSTER ENCLOSURE

REVISIONS

VCBO ARCHITECTURE
524 SOUTH 600 EAST
SALT LAKE CITY, UTAH 84102
Phone: (801) 575-5800
Fax: (801) 531-9850
WWW: www.vcbo.com

WEST WENDOVER
West Wendover

VALENTINER CRANE architects

date: 08-20-07
drawn: chkd:
project: 05720
title: ARCHITECTURAL SITE PLAN

A0.1

Figure 2 Page 5

over 40,000 square feet of commercial retail space along with additional developments forthcoming, the anticipation and forecast is for positive revenue growth in the coming years.

This past year with the legalization of marijuana in Nevada and with the legalization of the related businesses activities within the City's jurisdiction, the related marijuana retail sales and cultivation/production facilities which are currently now underway with land purchases and plan approvals, will have a significant positive impact on revenue in the coming year. This is due to the associated local excise taxes (3%) and annual licensing fees attributed to these specific businesses.

The City is also expecting growth in the residential housing market in the near term as a new contractor and developer (Silver Zone Construction and Bomarc Ventures LLC) has acquired housing lots which were part of previously uncompleted housing subdivisions and additionally they have acquired at least 10 acres of undeveloped residentially zoned property near the Toana Vista Golf Course to undertake multiple housing projects.

Tying the residential developments with the recent completion of the new commercial retail square footage and with the positive economic impact of the Newmont Long Canyon gold mine which completed its first full year of operation in December of 2017; this has all had a very positive impact on the local economy. Now, with the Long Canyon mine proceeding with their Phase 2 expansion, the mine life for this particular mine will likely extend 40 plus years into the future if not longer. When you add Long Canyon's development with other existing local mining facilities (Graymont Pilot Peak Lime Plant and Intrepid Potash) this certainly cements mining as a long-term economic component alongside the tourism/gaming industry as our economy expands.

3.1.4. Similar Facilities In And Services In The Area

There are currently no similar type facilities in the service area for the City except for the existing fire station.

3.1.5. Community Support

There is community support for completing the West Wendover Fire Station Project. The project has been part of the City's annual Capital Improvement Plan since 2007 and was recently included in the City CIP and Debt Management Plan adopted in 2017.

3.1.6. Regulatory Agency Approval

Regulatory agency approval of the project consists of City approval and USDA-RD approval with regard to the funding program. The project will be constructed on land leased under a Recreation and Public Purposes Lease (R&PP) form the Bureau of Land Management (BLM).

3.1.7. City Staff

The City of West Wendover is a full-service City with approximately 70 employees. The management of the City is through a professional staff including City Manager and various Department Heads including in this instance (Fire Department) the Fire Chief. The City has a long and productive history with projects related to funding through USDA. In relation to this specific project, the City intends to pursue a Design Build or Construction Management (CMc) type arrangement.

SECTION D – BUILDING SITES

4.1. Amount of Land Required

The proposed facility is located on a 20-acre site that also includes the City administrative offices, courts and police station. The proposed facility occupies 1.5 acres of the site.

4.2. Location - Alternate Locations

The City reviewed numerous alternate locations for the fire station. The first location reviewed was the existing fire station location. As mentioned in Section 2.1, the existing facility is located on a private property that the City leases. This limits the expansion or construction of a new fire station.

The City also looked at constructing the fire station at the old Public Works building site located just west of the intersection of Mesa Street and Alpine Street on the south side of town. This site increased response time to the City commercial areas.

Ultimately, the optimal location was next to the City Hall Government Complex as it was adjacent to both commercial and residential areas with the capability to service the City via two major arterial streets, Wendover Boulevard and Pueblo Boulevard.

4.3. Site Plan

Figure 2 displays the current site plan for the proposed project. Any modifications will be incorporated and updated, as appropriate, into the final design by the architect.

4.4. Site Suitability

This particular location of the proposed facility is an element of the Downtown Commercial Core. This core is an area that is separated from the hospitality and entertainment districts in the community. Residents utilize this core area to purchase groceries, hardware, fuel and other daily living necessities. The core is located along Pueblo Boulevard provides direct access to 2/3's of the community's residential districts. The proposed facility will provide the serve the core along Pueblo and Wendover Boulevard. The site is also well suited for the proposed project as it will be adjacent to the rest of the City Hall Governmental Complex. Refer to Figure 2 for a conceptual site plan.

SECTION E – COST ESTIMATE

5.1. Development and Construction

The fire station development and construction cost estimate for the project is shown in Table 1.

Table 1: Fire Station Development and Construction Cost Estimate

Improvement	Estimation Basis	Quantity	Unit	Unit Price	Unit Totals	Total
Fire Station	Existing (SF) 3500	11000	SF	$ 441.36		$ 4,855,000.00
Garage (5 Bays) on Main Floor	Garage (Municipal)	3650	SF	$ 500.00	$ 1,825,000.00	
Living Space/Offices on Main Floor	Fire Station	2600	SF	$ 600.00	$ 1,560,000.00	
Living Space/Offices on 2nd Floor	Fire Station	1100	SF	$ 600.00	$ 660,000.00	
Basement	Storage (Unfinished)	2600	SF	$ 250.00	$ 650,000.00	
Enclosed Walkway	Connection to City Offices & Police	800	SF	$ 200.00	$ 160,000.00	
Site Work						$ 1,170,000.00
Earthwork	Common Excavation	22000	CY	$ 25.00	$ 550,000.00	
Drainage	Run-on and Run-off Management	1	LS	$ 150,000.00	$ 150,000.00	
Potable Water and Fire Suppression	8" PVC + Ancillary Lines & Equipment	500	LF	$ 100.00	$ 50,000.00	
Sanitary Sewer Lateral	6" PVC	200	LF	$ 50.00	$ 10,000.00	
Asphalt Paving (4" ACP on 12" UTB)	Parking & Access Road Surfacing	8000	SF	$ 20.00	$ 160,000.00	
Site Electrical and Lighting	Primary and Secondary	1	LS	$ 150,000.00	$ 150,000.00	
Landscaping	Trees, Grass, & Irrigation	1	LS	$ 100,000.00	$ 100,000.00	

Architectural and Engineering Design	$	421,750.00
Contingency	$	485,000.00
PROJECT TOTAL	**$**	**6,931,750.00**

5.2. Land and Rights

The City Hall Complex and the proposed Fire Station are located on land owned by BLM through a R&PP Lease. Under the R&PP Lease, the City has lease rights to the property for the public purposes proposed and will in the future be able to acquire the property under a patent from BLM. The lease amounts for properties under this program are minimal. This lease includes approximately 125 acres.

5.3. Legal

It is not anticipated that there will be any legal fees. However, if legal fees are incurred, except for those incurred with regards to bonding/ financial requirements, they will be provided by the City of West Wendover for as in-kind contributions.

5.4. Architect Fees

Proposed project costs as shown in Table 3, $421,750.00 is the estimate for architectural/engineering fees. This fee includes the direct architect fee as well as any engineering fees associated with the requirements of the architect in completing their design and management of the project.

5.5. Interest

Anticipated yearly interest payments are shown on page 3 of the Financial Analysis, City of West Wendover, Fire Station/Land Purchase Project included in Appendix B.

5.6. Equipment

The cost estimate reflects the equipment directly associated with the facility built in addition to that equipment required for the construction of the facility.

5.7. Contingencies

The City incorporated an eight percent contingency amount in the estimate (Table 1).

5.8. Refinancing

The City will take out the construction loan issued through a separate financial institution suitable to the parties involved for the proposed project. There would be no refinancing only long-term financing provided by USDA-RD.

5.9. Other

None

SECTION F – ANNUAL OPERATING BUDGET

6.1. Income

Not Applicable

6.2. Operation and Maintenance Costs

Operation and maintenance Costs are shown on page 1 of the Financial Analysis, City of West Wendover, Fire Station/Land Purchase Project included in Appendix B.

SECTION G – MAPS, DRAWINGS, SKETCHES, AND PHOTOGRAPHS

7.1. Maps

Appendix C contains the following maps:

- Project Location on Topographic Map
- Map of City Identifying Population, Residential Areas and Commercial Areas with relationship to the Proposed Facility, APX C-1
- Property Line Survey
    - Note: Fire Station is located on Parcel B.

7.2. Drawings and Sketches

The following drawings have been included in this report:

- Figure 1, City of West Wendover Fire Station Project Location Map
- Figure 2, City of West Wendover Fire Station Site Plan

7.3. Photographs

The following are photographs of the proposed fire station site:

Figure 3: Photo Looking West from Existing City Hall Complex at Proposed Site



Figure 4: Photo Looking Northwest from Existing City Hall Complex North Parking Area at Proposed Site



Figure 5: Photo Looking North from Gene L Jones Way at Proposed Site



Figure 6: Photo Looking East at Proposed Site



Figure 7: Photo Looking Southeast Towards Gene L Jones Way at Proposed Site



SECTION H – CONSTRUCTION PROBLEMS

8.1. Issues That May Affect Project Costs

The City Hall Complex Project addressed most of the existing underground utilities that are located adjacent to the site and in some cases provided the conduits or stubs necessary to tie into for the proposed facility. With construction of the City Hall Complex and surrounding improvements, the geotechnical characteristics of the site are understood. This knowledge has been utilized in estimating the costs for the proposed facility.

One item that could affect construction costs that was encountered during construction of the City Hall Complex Project is rock. This was factored into the earthwork costs. However, if a significant amount is encountered then it would affect the construction costs.

The construction market pricing is currently volatile and labor is tight. With market volatility there is no way of knowing what will occur prior to the bidding of the project. The imposing of tariffs on some imported construction materials costs have increased significantly. Tariffs or threats of tariffs are causing suppliers to increase their bids in anticipation of material cost increases. This also causes suppliers to not guarantee bids beyond 45 to 60 days which limits contractors who bid on projects. Recent projects have seen cost increases of anywhere from 25% to 50%. These cost increases are larger than a typical construction contingency. If the project comes in over budget during the bidding process the City would need to cut site improvement items such as landscaping, irrigation, etc. and build these site improvements at a later date. This would not be desirable but might be required to keep contingency numbers at a reasonable level.

To summarize, material and labor costs with the volatile market are construction costs that could increase with the volatile market. A balance is recommended between pairing down non-essential improvements and a reasonable contingency if project costs are significantly higher than anticipated.

SECTION I – CONCLUSIONS AND RECOMENDATIONS

9.1. Alternatives

9.1.1. No Action Alternative

The No Action Alternative consists of not constructing a new fire station. The City would continue to operate out of the existing fire station build in the 1980's for a population of 1,500. The No Action Alternative is not considered feasible as the existing fire station does not meet the demands of the City's current population.

9.1.2. Alternative 1 – Fire Station Adjacent to City Hall Complex

Alternative 1 consists of constructing the fire station adjacent to the City Hall Complex. As mentioned previously, there are existing utilities adjacent to the site and the proposed facility is suitable for the land. The City also has an R&PP Lease with BLM so property acquisition is not required.

9.1.3. Alternative 2 – Fire Station at Old Public Works Site

The City reviewed the construction of the Fire Station at the old Public Works site (Alternative 2). However, this location west of the intersection of Alpine Street and Mesa Street increased response times for the City's commercial areas along Pueblo Boulevard and Wendover Boulevard. Thus, this site was deemed unsuitable.

9.2. Preferred Alternative

The preferred alternative is Alternative 1. The City requires a fire station that will meet the City's current and future needs. The proposed facility location is also located centrally to the City's residential and commercial areas with access via Pueblo and Wendover Boulevard. With proximity to other City facilities locating the fire station next to the City Hall Complex is the preferred alternative.

9.3. Recommendation

The Fire Station Project is the final step to finish the City Hall Complex and bring the City's Fire Department into the twenty first century. The improvements have been planned for and even anticipated with the construction City Hall Complex by providing utility and conduit stubs.

This Preliminary Architectural Feasibility Report shows that the project has been planned for and carefully thought out over a long period of time ensuring that it is necessary, the site is suitable,

and the design fits the need. The City has the resources to repay the bonds and maintain the improvements for years to come and the project will benefit the community.

Due to the volatility driven by Federal actions and public discussion of tariffs on imported materials such as aluminum, steel, and other materials and the tight labor market, the City recognizes that construction costs will fluctuate. A contingency has been provided with the option to reduce non-essential items out of the project if bids exceed the budgeted amount.

Environmental considerations may be found under separate cover in a document titled City Hall Government Complex Environmental Review. Refer to Appendix A for the reference. The City has taken consideration potential environmental impacts for each phase of development from the inception of the City Center Master Plan. As construction on the Proposed Facility progresses any archeological or cultural artifacts that surface will be addressed per the requirements of NRS 383.121.

In closing, with proximity to other City facilities and commercial and residential areas it is recommended that the Fire Station be constructed adjacent to the City Hall Complex.

APPENDIX A

REFERENCES

REFERENCES

1. West Wendover City Hall Government Complex Preliminary Architectural Feasibility Report. City of West Wendover and AQUA Engineering, 2006.
2. Financial Analysis, City of Wendover Fire Station/ Land Purchase Project. City of West Wendover, July 2018.
3. West Wendover City Hall Government Complex Environmental Report. VCBO, 2006.

APPENDIX B

FINANCIAL ANALYSIS, CITY OF WEST FIRE STATION/ LAND PURCHASE PROJECT

FINANCIAL ANALYSIS
CITY OF WEST WENDOVER
FIRE STATION/LAND PURCHASE PROJECT

ADDENDUM TO USDA FEASIBILTIY REPORT

City of West Wendover													
Revenues and Expenditures													
Combined General Fund and Capital Projects Fund													
			Fiscal Year										
		17-18	18-19	19-20	20-21	21-22	22-23	23-24	24-25	25-26	26-27	27-28	28-29
Revenue													
Property Taxes		1,472,600	1,515,800	1,620,800	1,683,600	1,748,000	1,794,100	1,841,500	1,890,100	1,940,000	1,991,200	2,043,800	2,097,800
Licenses and Permits		1,012,700	1,024,400	1,165,100	1,307,900	1,327,900	1,348,200	1,368,800	1,389,700	1,411,000	1,432,600	1,454,500	1,476,800
Intergovernmental Revenue		3,798,200	3,971,100	4,180,400	4,274,000	4,394,400	4,492,000	4,576,400	4,662,400	4,750,100	4,839,400	4,930,400	5,023,100
Charges for Services		44,100	48,900	49,400	49,900	50,400	50,900	51,400	51,900	52,400	52,900	53,400	53,900
Fines and Forfeitures		85,600	88,000	88,900	89,800	90,700	91,600	92,500	93,400	94,300	95,200	96,200	97,200
Sale of Fixed Assets		233,615	718,740	-	248,292	-	-	-	-	-	-	-	-
Grant Proceeds		-	-	-	-	-	-	-	-	-	-	-	-
Other Revenue		187,200	262,002	227,002	207,400	182,400	182,400	182,400	182,400	182,400	182,400	182,400	182,400
Total Revenue		6,834,015	7,628,942	7,331,602	7,860,892	7,793,800	7,959,200	8,113,000	8,269,900	8,430,200	8,593,700	8,760,700	8,931,200
General Government													
Salaries Wages & Benefits		743,000	607,900	620,100	632,500	638,800	645,200	658,100	664,700	671,300	684,700	691,500	698,400
Other Expenditures		480,100	385,500	389,400	393,300	397,200	401,200	405,200	409,300	413,400	417,500	421,700	425,900
Municipal Court													
Salaries Wages & Benefits		302,900	325,400	331,900	338,500	341,900	345,300	352,200	355,700	359,300	366,500	370,200	373,900
Other Expenditures		51,100	54,700	55,200	55,800	56,400	57,000	57,600	58,200	58,800	59,400	60,000	60,600
Election Expense		-	1,400	-	1,400	-	1,400	-	1,400	-	1,400	-	1,400
Wendover Police													
Salaries Wages & Benefits		1,780,100	2,014,300	2,054,600	2,095,700	2,116,700	2,137,900	2,180,700	2,202,500	2,224,500	2,269,000	2,291,700	2,314,600
Other Expenditures		334,000	342,800	346,200	349,700	353,200	356,700	360,300	363,900	367,500	371,200	374,900	378,600
Fire Department													
Salaries Wages & Benefits		668,500	685,300	699,000	713,000	720,100	727,300	741,800	749,200	756,700	771,800	779,500	787,300
Other Expenditures		96,300	96,300	97,300	98,300	99,300	100,300	101,300	102,300	103,300	104,300	105,300	106,400
Dispatch Center													
Salaries Wages & Benefits		453,300	478,100	487,700	497,500	502,500	507,500	517,700	522,900	528,100	538,700	544,100	549,500
Other Expenditures		57,700	59,700	60,300	60,900	61,500	62,100	62,700	63,300	63,900	64,500	65,100	65,800
Paved Streets													
Salaries Wages & Benefits		59,700	95,600	97,500	99,500	100,500	101,500	103,500	104,500	105,500	107,600	108,700	109,800
Other Expenditures		146,400	140,100	141,500	142,900	144,300	145,700	147,200	148,700	150,200	151,700	153,200	154,700
Public Works													
Salaries Wages & Benefits		320,800	344,000	350,900	357,900	361,500	365,100	372,400	376,100	379,900	387,500	391,400	395,300
Other Expenditures		30,900	30,300	30,600	30,900	31,200	31,500	31,800	32,100	32,400	32,700	33,000	33,300
Community Development													
Salaries Wages & Benefits		186,700	220,500	224,900	229,400	231,700	234,000	238,700	241,100	243,500	248,400	250,900	253,400
Other Expenditures		143,200	153,200	154,700	156,200	157,800	159,400	161,000	162,600	164,200	165,800	167,500	169,200
Public Health													
Other Expenditures		7,500	22,400	15,400	15,600	15,800	16,000	16,200	16,400	16,600	16,800	17,000	17,200
Animal Control													
Salaries Wages & Benefits		93,000	94,200	96,100	98,000	99,000	100,000	102,000	103,000	104,000	106,100	107,200	108,300
Other Expenditures		26,000	23,700	23,900	24,100	24,300	24,500	24,700	24,900	25,100	25,400	25,700	26,000

City of West Wendover													
Revenues and Expenditures													
Combined General Fund and Capital Projects Fund													
			Fiscal Year										
Community Support													
Other Expenditures		12,800	30,000	13,000	31,000	13,500	32,000	14,000	33,000	14,500	34,000	15,000	35,000
Library													
Other Expenditures		17,600	17,600	17,800	18,000	18,200	18,400	18,600	18,800	19,000	19,200	19,400	19,600
Operating Transfers Out		122,000	130,000	131,300	132,600	133,900	135,200	136,600	138,000	139,400	140,800	142,200	143,600
Total Expenditures		6,133,600	6,353,000	6,439,300	6,572,700	6,619,300	6,705,200	6,804,300	6,892,600	6,941,100	7,085,000	7,135,200	7,227,800
Revenues Net of Expenditures		700,415	1,275,942	892,302	1,288,192	1,174,500	1,254,000	1,308,700	1,377,300	1,489,100	1,508,700	1,625,500	1,703,400
Current Debt Service													
Principle													
PD Vehicles		110,074	50,000	52,000	53,000	54,000	55,000	55,000	55,000	55,000	55,000	55,000	55,000
Government Complex		258,000	270,000	-	-	-	-	-	-	-	-	-	-
City Hall Complex		121,964	127,408	133,096	139,037	145,243	151,726	158,499	165,574	172,965	180,686	188,752	197,177
Florence Way		161,000	167,000	173,000	180,000	187,000	195,000	199,000	206,000	213,000	-	-	-
Total Principle		651,038	614,408	358,096	372,037	386,243	401,726	412,499	426,574	440,965	235,686	243,752	252,177
Interest													
PD Vehicles		9,164	5,401	4,249	3,062	1,853	622	5,000	5,000	5,000	5,000	5,000	5,000
Government Complex		23,549	12,042	-	-	-	-	-	-	-	-	-	-
City Hall Complex		191,536	186,092	180,404	174,463	168,257	161,774	155,001	147,926	140,535	132,814	124,748	116,323
Florence Way		36,171	32,465	28,623	24,634	20,487	16,170	11,718	7,142	2,407	-	-	-
Total Interest		260,420	236,000	213,276	202,159	190,597	178,566	171,719	160,068	147,942	137,814	129,748	121,323
Total Current Debt Service		911,458	850,408	571,372	574,196	576,840	580,292	584,218	586,642	588,907	373,500	373,500	373,500
Summary:													
Revenue		6,834,015	7,628,942	7,331,602	7,860,892	7,793,800	7,959,200	8,113,000	8,269,900	8,430,200	8,593,700	8,760,700	8,931,200
Salaries and Wages		4,608,000	4,865,300	4,962,700	5,062,000	5,112,700	5,163,800	5,267,100	5,319,700	5,372,800	5,480,300	5,535,200	5,590,500
Other Expenditures		1,525,600	1,487,700	1,476,600	1,510,700	1,506,600	1,541,400	1,537,200	1,572,900	1,568,300	1,604,700	1,600,000	1,637,300
Rev Net of Expenditures		700,415	1,275,942	892,302	1,288,192	1,174,500	1,254,000	1,308,700	1,377,300	1,489,100	1,508,700	1,625,500	1,703,400
Debt Service		911,458	850,408	571,372	574,196	576,840	580,292	584,218	586,642	588,907	373,500	373,500	373,500
Net after Debt Service		(211,043)	425,534	320,930	713,996	597,660	673,708	724,482	790,658	900,193	1,135,200	1,252,000	1,329,900

City of West Wendover														
Revenues and Expenditures														
Combined General Fund and Capital Projects Fund														
			Fiscal Year											
Proposed Debt Service:														
Fire Station Facility and Land														
Principal						135,909	139,477	143,138	146,895	150,751	154,708	158,770	162,937	167,214
Interest						227,896	224,328	220,667	216,910	213,054	209,097	205,035	200,868	196,591
Total		-	-	-	363,805	363,805	363,805	363,805	363,805	363,805	363,805	363,805	363,805	363,805
Downtown Development														
Principal				42,220	43,329	44,466	45,633	46,831	48,060	49,322	50,617	51,945	53,309	
Interest				62,344	61,235	60,098	58,931	57,733	56,504	55,242	53,947	52,619	51,255	
Total		-	-	104,564	104,564	104,564	104,564	104,564	104,564	104,564	104,564	104,564	104,564	
Total Proposed Debt Service:		-	-	104,564	468,369	468,369	468,369	468,369	468,369	468,369	468,369	468,369	468,369	
Net after Proposed Debt Service		(211,043)	425,534	216,366	245,627	129,291	205,339	256,113	322,289	431,824	666,831	783,631	861,531	
Long Term Debt:														
Current														
PD Vehicles		264,000	214,000	162,000	109,000	55,000	55,000	55,000	55,000	55,000	55,000	55,000	55,000	
Government Complex		270,000	-	-	-	-	-	-	-	-	-	-	-	
City Hall Complex		4,311,457	4,184,049	4,050,953	3,911,916	3,766,673	3,614,947	3,456,447	3,290,873	3,117,908	2,937,221	2,748,470	2,551,293	
Florence Way		1,520,000	1,353,000	1,180,000	1,000,000	813,000	618,000	419,000	213,000	-				
Total Current		6,365,457	5,751,049	5,392,953	5,020,916	4,634,673	4,287,947	3,930,447	3,558,873	3,172,908	2,992,221	2,803,470	2,606,293	
Proposed														
Fire Station				8,681,750	8,545,841	8,406,364	8,263,226	8,116,331	7,965,580	7,810,872	7,652,102	7,489,165	7,321,951	
Downtown			2,375,000	2,332,780	2,289,451	2,244,985	2,199,352	2,152,521	2,104,461	2,055,139	2,004,522	1,952,577	1,899,268	
Total Proposed		-	2,375,000	11,014,530	10,835,292	10,651,349	10,462,578	10,268,852	10,070,041	9,866,011	9,656,624	9,441,742	9,221,219	
Total Long Term Debt		6,365,457	8,126,049	16,407,483	15,856,208	15,286,022	14,750,525	14,199,299	13,628,914	13,038,919	12,648,845	12,245,212	11,827,512	

City of West Wendover
Statement / Forecast of Cash Flows
Combined General Fund and Capital Projects Fund

	Estimated 6/30/18	Budgeted 6/30/19	Forecast >> 6/30/20	6/30/21	6/30/22	6/30/23
Cash Flows From Operating Activities						
Cash received from property taxes	1,472,600	1,515,800	1,620,800	1,683,600	1,748,000	1,794,100
Cash received from licenses	1,007,500	1,024,400	1,165,100	1,307,900	1,327,900	1,348,200
Cash received from intergovernmental revenue	3,798,200	3,971,100	4,180,400	4,274,000	4,394,400	4,492,000
Cash received from charges for services	44,100	48,900	49,400	49,900	50,400	50,900
Cash received from fines and forfeitures	85,600	88,000	88,900	89,800	90,700	91,600
Cash paid to suppliers	(1,403,600)	(1,357,700)	(1,345,300)	(1,378,100)	(1,372,700)	(1,406,200)
Cash paid to employees	(4,608,000)	(4,865,300)	(4,962,700)	(5,062,000)	(5,112,700)	(5,163,800)
Transfers to Specialty Funds	(122,000)	(130,000)	(131,300)	(132,600)	(133,900)	(135,200)
Net cash flows from operating activities	$ 274,400	$ 295,200	$ 665,300	$ 832,500	$ 992,100	$ 1,071,600
Cash Flows From Noncapital Financing Activities						
Impact fees, building permits	5,200	60,000	25,000	25,000		
Cash received from miscellaneous sources	181,600	197,502	197,002	177,400	177,400	177,400
Net cash flows from noncapital financing activities	$ 186,800	$ 257,502	$ 222,002	$ 202,400	$ 177,400	$ 177,400
Cash Flow From Capital and Related Financing Activities						
Sale of property, plant, equipment	233,615	718,740	-	248,292	-	-
Grant revenue	-	525,000	-	-	-	-
Proceeds from long term debt	-	2,375,000	8,681,750			
Principle paid on capital debt	(651,038)	(614,408)	(400,316)	(551,275)	(570,186)	(590,497)
Interest paid on capital debt	(260,420)	(236,000)	(275,620)	(491,290)	(475,023)	(458,164)
Acquisition and construction of capital assets	-	(2,900,000)	(8,681,750)			
Net cash flows from capital and related financing activities	$ (677,843)	$ (131,668)	$ (675,936)	$ (794,273)	$ (1,045,209)	$ (1,048,661)
Cash Flows From Investing Activities						
Interest income	$ 5,600	$ 4,500	$ 5,000	$ 5,000	$ 5,000	$ 5,000
Net change in cash and cash equivalents	$ (211,043)	$ 425,534	$ 216,366	$ 245,627	$ 129,291	$ 205,339
Cash and investments, including restricted, beginning of year	$ 666,577	$ 455,534	$ 881,068	$ 1,097,434	$ 1,343,061	$ 1,472,352
Cash and Cash Equivalents, Including Restricted, End of Year	$ 455,534	$ 881,068	$ 1,097,434	$ 1,343,061	$ 1,472,352	$ 1,677,691

City of West Wendover
Balance Sheet
Combined General Fund and Capital Projects Fund

ASSETS	6/30/18	6/30/19	6/30/20	6/30/21	6/30/22	6/30/23
CURRENT ASSETS						
Cash on hand in Banks	455,534	881,068	1,097,434	1,343,061	1,472,352	1,677,691
Accounts receivable	630,000	780,000	675,000	750,000	700,000	700,000
Inventories	26,600	25,000	25,000	25,000	25,000	25,000
Prepayments	87,200	75,000	75,000	80,000	80,000	85,000
Total Current Assets	$ 1,199,334	$ 1,761,068	$ 1,872,434	$ 2,198,061	$ 2,277,352	$ 2,487,691
FIXED ASSETS						
Land	1,723,317	1,237,742	1,956,482	3,458,190	3,458,190	3,458,190
Buildings	10,237,658	10,237,658	10,237,658	17,169,408	17,169,408	17,169,408
Improvements other than buildings	9,420,044	9,420,044	12,320,044	12,320,044	12,320,044	12,320,044
Furniture and equipment/Vehicles	3,249,696	3,249,696	3,249,696	3,249,696	3,249,696	3,249,696
Work in progress	-	2,900,000	8,681,750			
Less: Accumulated depreciation	(7,583,082)	(8,375,502)	(9,396,392)	(10,417,282)	(11,438,172)	(12,459,062)
Net Total Fixed Assets	$ 17,047,633	$ 18,669,638	$ 27,049,238	$ 25,780,056	$ 24,759,166	$ 23,738,276
Total Assets	$ 18,246,967	$ 20,430,706	$ 28,921,672	$ 27,978,117	$ 27,036,518	$ 26,225,967
LIABILITIES AND EQUITIES						
CURRENT LIABILITIES						
Accounts payable	163,300	75,000	100,000	110,000	115,000	120,000
Current portion of Bonds payable	614,408	400,316	551,275	570,186	590,497	606,225
Current portion of Capital lease	-	-	-	-	-	60,000
Accrued liabilities	102,300	110,000	115,000	120,000	125,000	130,000
Interfund balances	-	-	-			
Deferred revenue	60,000	60,000	60,000	60,000	60,000	60,000
Total Current Liabilities	$ 940,008	$ 645,316	$ 826,275	$ 860,186	$ 890,497	$ 976,225
LONG-TERM LIABILITIES						
Note/Bonds payable	5,751,049	7,725,733	15,856,208	15,286,022	14,750,525	14,199,299
Capital lease payable	-	-	-	-	-	300,000
Total Long-Term Liabilities	$ 5,751,049	$ 7,725,733	$ 15,856,208	$ 15,286,022	$ 14,750,525	$ 14,499,299
Total Liabilities	$ 6,691,057	$ 8,371,049	$ 16,682,483	$ 16,146,208	$ 15,641,022	$ 15,475,524
EQUITY						
Fund Balances	1,000,535	1,642,869	1,724,235	2,034,862	2,104,153	2,304,492
Investment in capital assets	10,682,176	10,543,589	10,641,755	9,923,848	9,418,144	8,572,752
Total Equity	$ 11,682,711	$ 12,186,458	$ 12,365,990	$ 11,958,710	$ 11,522,297	$ 10,877,244
Total Liabilities and Equity	$ 18,373,768	$ 20,557,507	$ 29,048,473	$ 28,104,918	$ 27,163,319	$ 26,352,768

APPENDIX C

MAPS

FIRE STATION
40° 44' 33.44"N 114° 04' 24.07"W

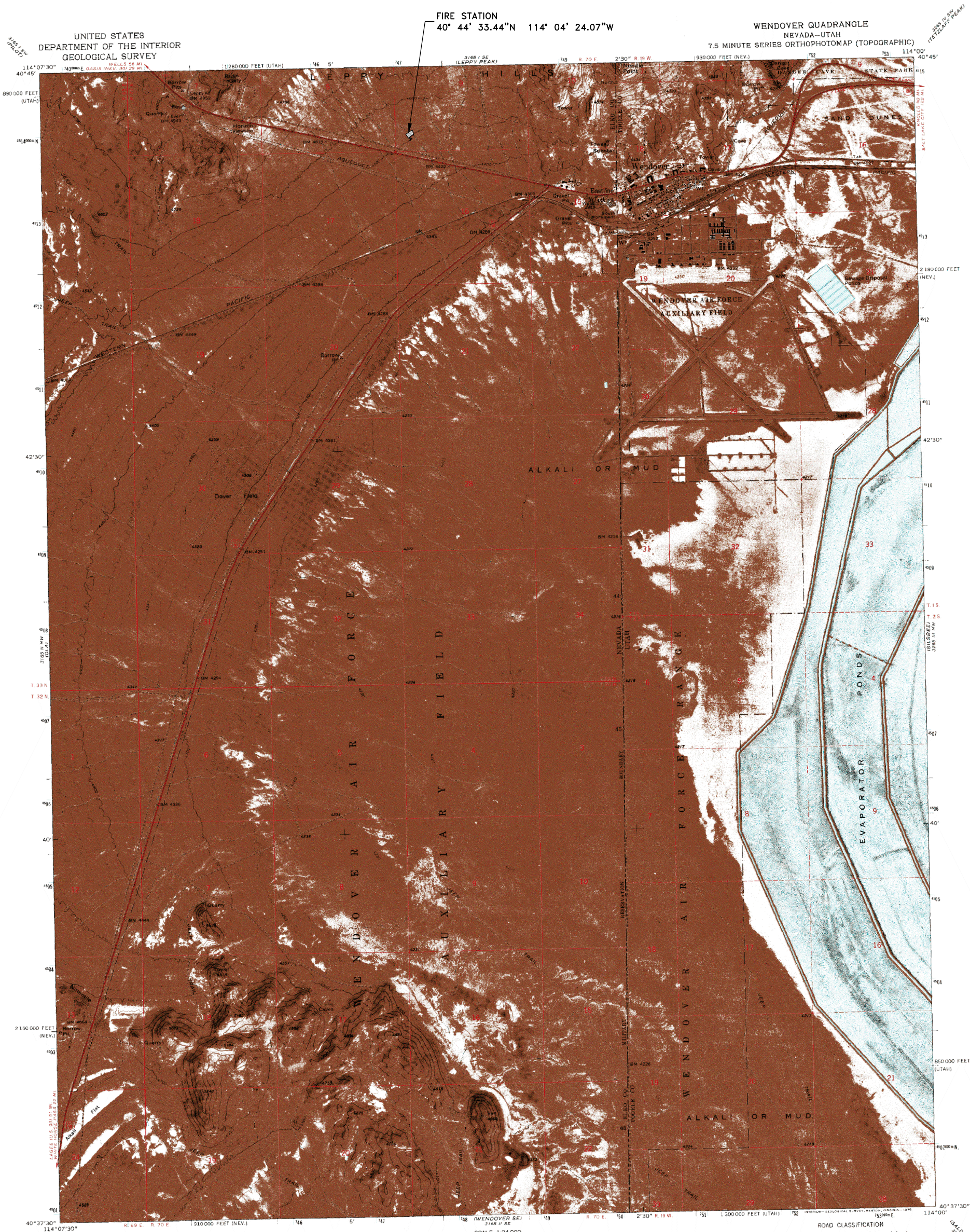

SECTION 7

SECTION 8

SECTION 9

SECTION 10

SECTION 15

SECTION 16

SECTION 17

SECTION 18

PROJECT LOCATION

CITY BOUNDARY

I-80 West Bound

I-80 East Bound

Wendover Boulevard

Exit 402

North Gate Jones Way

Pueblo

Wells Avenue

Florence Way

Railroad

Airport Way

Scable Road

Aria Blvd

Wendover Blvd

450 South

PCL1

PCL2

LEGEND

- RESIDENTIAL DISTRICTS
- LOCAL COMMERCIAL DISTRICT
- TOURISM & ENTERTAINMENT DISTRICT
- COMMERCIAL / INDUSTRIAL DISTRICTS

NOTE: ALL SECTIONS ARE LOCATED IN TOWNSHIP 33 NORTH, RANGE 70 EAST, MOUNT DIABLO BASE AND MERIDIAN.

City of West Wendover
Current Population 4,685
Wendover Area Population
Approximately 6,000

MAGNETIC

0 750 1500 2250
Scale in Feet

DRAWING IS TO SCALE IF BAR MEASURES:
1" = FULL SCALE
1/2" = HALF SCALE

ORIGINAL			
NO.	DATE	DESIGN	DRAWN	CHECKED
A	7/14/18	SGS	SGS	SGS

REVISIONS

CITY OF WEST WENDOVER

FIRE STATION

PROJECT LOCATION MAP

AQUA ENGINEERING
533 W. 2600 S, SUITE 275, BOUNTIFUL, UT 84010
PHONE (801) 299-1327 FAX (801) 299-0155

FIGURE:
APX C-1

KRB 07/16/2018 W:\Wendover\Special Projects\Fire Station 2018\Drawings\CITY WIDE MAP.dwg

United States Department of the Interior

BUREAU OF LAND MANAGEMENT
Arizona State Office
One North Central Avenue, Suite 800
Phoenix, Arizona 85004-4427
www.blm.gov/az/

TAKE PRIDE IN AMERICA

June 23, 2008

In Reply Refer To:
2912 (AZ-910)

Mr. Chris Melville
City of West Wendover
801 Alpine Street,
P.O. Box 2825
West Wendover, Nevada 89883

Dear Mr. Melville:

The purpose of this letter is to provide confirmation that Mr. Joe Freeland was officially detailed into the Elko Field Office Manager position beginning on or about February 5, 2007 and extending through March 13, 2007. As such, Mr. Freeland had full delegated authority to act as the Field Manager during my absence. This included the review, approval and signing of all official government documents.

When Mr. Freeland signed the Recreation and Public Purpose Lease Rental Request and the Lease for the City of West Wendover on February 22, 2007, he had full authority to do so.

Please contact me if you have any further need for assistance. My phone number is 602-417-9500.

Sincerely,

Helen M. Hankins
Associate State Director

United States Department of the Interior

BUREAU OF LAND MANAGEMENT
Elko Field Office
3900 East Idaho Street
Elko, Nevada 89801-4611
http://www.nv.blm.gov

In Reply Refer To:

N-79079
2912
(NV-013)

2/20/07

~~Certified Mail No. 7002 0860 0004 9774 9582~~ Hand Delivered 2/22/07
Return Receipt Requested

S. Donde 2/22/07

Chris Melville City of West Wendover 801 Alpine St. PO Box 2825 West Wendover, NV 89883	:	Recreation and Public Purpose Lease

LEASE WITH OPTION TO PURCHASE OFFERED
LEASE RENTAL REQUESTED

The application submitted by the City of West Wendover requested that the following described land be classified for sale or lease pursuant to the Recreation and Public Purposes Act:

Mount Diablo Meridian

T. 33 N., R. 70 E.,
Sec. 8, Lots 8 and 10, a portion of S1/2;
Sec.9, SW1/4SW1/4; a portion of N1/2SE1/4SW1/4;
Sec.16, NW1/4NW1/4

Containing approximately 124.67 acres, as shown on the map in Exhibit B of the lease.

The land has been classified. A five (5) year lease with an option to purchase is offered. The purchase option may be exercised at any time during the term of the lease when development of the land is in substantial compliance with the plan of development filed with this office on This lease may be renewed. A request for renewal should be filed at least 90 days prior to the expiration of the lease.

Under the Recreation and Public Purposes Act, governmental entities may lease lands under

special pricing for lands which will be government controlled, used for government purposes and serve the general public. The lease cost under this special pricing is $2.00 per acre, which is $249.34 per year, or a total of $1246.70 for the 5 year term of the lease.

If you concur, the enclosed lease forms are to be signed by an authorized City official and returned to this office, along with the rental amount of $1246.70 within 60 days from the receipt of this notice. A copy of the executed lease will be returned to you.

If you do not concur, please submit your comments or objections within the 60 days specified above.

If you have any questions, please contact Cathie Jensen at (775) 753-0230.

Joe Freeland

for Helen Hankins
Field Manager

Enclosure:
Lease Forms

CJENSEN:2/15/2007:WWENDOVERLSEOFFERN79079

ORIGINAL.

Form 2912-1
(April 1992)

UNITED STATES
DEPARTMENT OF THE INTERIOR
BUREAU OF LAND MANAGEMENT

Serial Number

N-79079-01

RECREATION OR PUBLIC PURPOSES LEASE

Act of June 14, 1926, as amended (43 U.S.C. 869 et. seq.)

This lease entered into on this **22nd** day of **February**, 2007, by the United States of America, the lessor, through the authorized officer of the Bureau of Land Management, and the

City of West Wendover
801 Alpine Street
PO Box 2825
West Wendover, NV 89883

, hereinafter called the lessee, pursuant and subject to the terms and provisions of the Recreation and Public Purposes Act and to all reasonable regulations of the Secretary of the Interior now or hereafter in force when not inconsistent with any express and specific provisions herein, which are made a part hereof,

WITNESSETH:

Sec. 1. The lessor, in consideration of the rents to be paid and the conditions to be observed as hereinafter set forth, does hereby grant and lease to the lessee the right and privilege of using for the purposes hereinafter set forth in the following-described lands:

Mount Diablo Meridian, Nevada

T.33 N., R. 70 E.,
Sec. 8, Lots 8 and 10, within S1/2;
Sec. 9, SW1/4SW1/4; within N1/2SE1/4SW1/4;
Sec. 16, NW1/4NW1/4,

Containing approximately 124.67 acres.

Containing **124.67 acres**, together with the right to construct and maintain thereon all buildings or other improvements necessary for such use for a period of **five years**, the rental to be **$249.34 per annum.** If, at the expiration date of the lease the authorized officer shall determine that the lease may be renewed, the lessee herein will be accorded the privilege of renewal upon such terms as may be fixed by the lessor. The lessee may use the premises for **a city center monument, city hall, civic plaza, hospital, library, amphitheater, city park, convention center, museum and performing arts center.**

Sec. 2. There are reserved to the United States all mineral deposits in said lands, together with the right to mine and remove the same under applicable laws and regulations to be established by the Secretary of the Interior.

Sec. 3. The lessor reserves the right of entry, or use, by

(a) any authorized person, upon the leased area and into the buildings constructed thereon for the purpose of inspection;

(b) Federal agents and game wardens upon the leased area on official business;

(c) the United States, its permittees and licensees, to mine and remove the mineral deposits referred to in Sec. 2, above.

Sec. 4. In consideration of the foregoing, the lessee hereby agrees:

(a) To improve and manage the leased area in accordance with the plan of development and management designated as **the West Wendover City Center** and approved by an authorized officer on **February 22**, 2007 or any modification thereof hereinafter approved by an authorized officer, and to maintain all improvements, during the term of this lease, in a reasonably good state of repair.

(b) To pay the lessor the annual rental above set forth in advance during the continuance of this lease.

(c) Not to allow the use of the lands for unlawful purposes or for any purpose not specified in this lease unless consented to under its terms; not to prohibit or restrict, directly or indirectly, or permit its agents, employees, contractors (including, without limitation,

(d) Not to assign this lease or to change the use of the land, without first receiving the consent of the authorized officer of the Bureau of Land Management.

(e) That this lease may be terminated after due notice to the lessee upon a finding by the authorized officer that the lessee had failed to comply with the terms of the lease; or has failed to use the leased lands for the purposes specified in this lease for a period of five consecutive years; or that all or part of the lands is being devoted to some other use not consented to by the authorized officer; or that the lessee has not complied with his development and management plans referred to in subsection 4(a).

(f) That upon the termination of this lease by expiration, surrender, or cancellation thereof, the lessee, shall surrender possession of the premises to the United States in good condition and shall comply with such provisions and conditions respecting the removal of the improvements of and equipment on the property as may be made by an authorized officer.

(g) To take such reasonable steps as may be needed to protect the surface of the leased area and the natural resources and improvements thereon.

(h) Not to cut timber on the leased area without prior permission of, or in violation of the provisions and conditions made by an authorized officer.

(i) That nothing contained in this lease shall restrict the acquisition, granting, or use of permits or rights-of-way under existing laws by an authorized Federal officer.

lessees, sublessees, and permittees), to prohibit or restrict the use of any part of the leased premises or any of the facilities thereon by any person because of such person's race, creed, color, sex, or national origin.

Sec. 5. *Equal Opportunity Clause*. Lessee will comply with all provisions of Executive Order No. 11246 of September 24, 1965, as amended, and the rules, regulations, and relevant orders of the Secretary of Labor. Neither lessee nor lessee's subcontractors shall maintain segregated facilities.

Sec. 6. *Equal Access Clause*. Lessee shall comply with all provisions of the American Disabilities Act of July 26, 1990, the Architectural Barriers Act of 1968, and Section 504 of the Rehabilitation Act of 1973, as amended. These Acts require that programs and public facilities constructed or renovated be accessible to and usable by persons with disabilities.

Sec. 7. The lessee may surrender this lease or any part thereof by filing a written relinquishment in the appropriate BLM office. The relinquishment shall be subject to the payment of all accrued rentals and to the continued obligation of the lessee to place the lands in condition for relinquishment in accordance with the applicable lease terms in subsections 4(f) and 4(g) and the appropriate regulations.

Sec. 8. The lessee further agrees to comply with and be bound by those additional terms and conditions identified as Appendices A and B and Addendum which are attached hereto and which are made a part hereof.

Sec. 9. No Member of, or Delegate to, the Congress, or Resident Commissioner, after his election or appointment, and either before or after he has qualified, and during his continuance in office, and no officer, agent, or employee of the Department of the Interior, except as otherwise provided in 43 CFR, Part 7, shall be admitted to any share or part of this lease, or derive any benefit that may arise therefrom, and the provisions of Title 18 U.S.C. Sections 431-433, relating to contracts, enter into and form a part of this lease, so far as the same may be applicable.

FOR EXECUTION BY LESSEE

IN WITNESS WHEREOF:

Josephine E. Faust

(Signature of Lessee's Authorized Officer)

Leon H. Flinders

(Signature of Witness)

February 22, 2007

(Date)

THE UNITED STATES OF AMERICA

By _____

(Authorized Officer)

Field Manager

(Title)

February 22, 2007

(Date)

This form does not constitute an information collection as defined by 44 U.S.C. 3502 and therefore does not require OMB approval.

U.S. Government Printing Office: 1992-673-017/47061

Appendix A

The lease of the herein described land is also subject to the following conditions and limitations:

(a) The lessee or its successor in interest shall comply with and shall not violate any of the terms or provisions of Title VI of the Civil Rights Act of 1964 (78 Stat. 241) and requirements of the regulations, as modified or amended, of the Secretary of the Interior issued pursuant thereto (43 CFR 17) for the period that the land leased herein is used for the purpose for which the lease was issued pursuant to the act cited or for another purpose involving the provision of similar services or benefits;

(b) If the lessee or its successor in interest does not comply with the terms or provisions of Title VI of the Civil Rights Act of 1964 and the requirements imposed by the Secretary of the Interior issued pursuant to that title during the period which the land described herein is used for the purpose involving the provision of similar services or benefits, said Secretary or his delegate may declare the terms of this lease terminated in whole or in part;

(c) The lessee, by acceptance of this lease, agrees for itself and its successors in interest that a declaration of termination in whole or in part of this lease shall, at the option of the Secretary of the Interior or his delegate, operate to revest in the United States full title to the land involved in the declaration;

(c) The United State shall have the right to seek judicial enforcement of the requirements of Title VI of the Civil Rights Act of 1964, and the terms and conditions of the regulations, as modified or amended, of the Secretary of the Interior issued pursuant to said Title VI, in the event of their violation by the lessee or its successor in interest;

(e) The lessee or its successor in interest will, upon request of the Secretary of the Interior or his delegate, post and maintain on the property conveyed by this document signs or posters bearing a legend concerning the applicability of Title VI of the Civil Rights Act of 1964 to the property conveyed:

(f) The conditions and limitations contained in paragraphs (a) through (e) shall constitute a covenant running with the land, binding on the lessee and its successors in interest for the period for which the land leased herein is used for the purpose for which this lease was issued or for another purpose involving the provision of similar services or benefits.

Addendum to Recreation and Public Purpose Lease

1. If antiquities including, but not limited to, archaeological items, paleontological objects or other objects of historic or scientific interest are discovered on the leased area, the lessee shall leave the items or conditions intact and inform the Field Office Manager.

2. The holder agrees to be responsible for the release or threatened release of any hazardous substance or hazardous waste as defined by the Comprehensive Environmental Response, Compensation, and Liability Act (CERCLA) of 1980 or the Resource Conservation and Recovery Act (RCRA) of 1976 respectively, within the boundaries of the right-of-way. This agreement applies without regard to whether the release or threatened release is caused by the holder, its agent, or unrelated third parties.

3. The holder shall protect all survey monuments found within the right-of-way. survey monuments include, but are not limited to, General Land Office and BLM Cadastral Survey Corners, reference corners, witness points, U.S. Coastal and Geodetic benchmarks and triangulation stations, military control monuments, and recognizable civil (both public and private) survey monuments. In the event of obliteration or disturbance of any of the above, the holder shall immediately report the incident, in writing, to the authorized officer and the respective installing authority if known. Where General Land Office or BLM right-of-way monuments or references are obliterated during operations, the holder shall secure the services of a registered land surveyor or a Bureau cadastral surveyor to restore the disturbed monuments and references using surveying procedures found in the *Manual of Surveying Instructions for the Survey of the Public Lands in the United States*, latest edition. The holder shall record such survey in the appropriate county and send a copy to the authorized officer. If the Bureau cadastral surveyors or other Federal surveyors are used to restore the disturbed survey monument, the holder shall be responsible for the survey cost.

4. The historic Victory Highway/U.S. 40 roadway within the lease parcel shall be preserved in place except at locations where the roadbed must be cut to allow street access to the city complex. The existing asphalt shall be preserved to the extent possible. In locations where the asphalt has deteriorated or been removed such as at the western end of the lease parcel and the culvert removal locations, the roadbed shall be maintained as a hard packed gravel surface.

5. Utilities shall be located within road crossing corridors, or bored under the highway so as not to disturb thee pavement more than necessary.

6. At street crossings the Victory Highway shall be saw cut and removed only for the width of the road and sidewalk, plus at most a 10 foot transition on the outside of the sidewalk.

7. The historic roadbed will require some repair prior to incorporating it into a walking/biking trail and continued maintenance to control vegetation. Repair and maintenance activities shall be conducted in a manner that preserves the integrity of the historic property. Drainages will be assessed to determine the necessity of installing culverts. If culverts are needed they will be designed to be unobtrusive and not distract from the historic nature of the highway. Discarded facing stones from previously removed culverts can be used with any new culverts. Compacted fill is to be used to bring previous culvert locations up to grade or to plug holes in the asphalt as outlined on pages 34-35 of cultural resources inventory report BLM1-2516.

8. West Wendover shall install interpretive signs along or near the historic property. As proposed by the City, they will work with the BLM to develop a plan for preservation and phased interpretation of the highway and the features along it. The extant culverts, billboard remains and the nearby transcontinental telephone line will be among the interpreted features. Discarded culvert facing stones may be used for construction of some of the monuments.

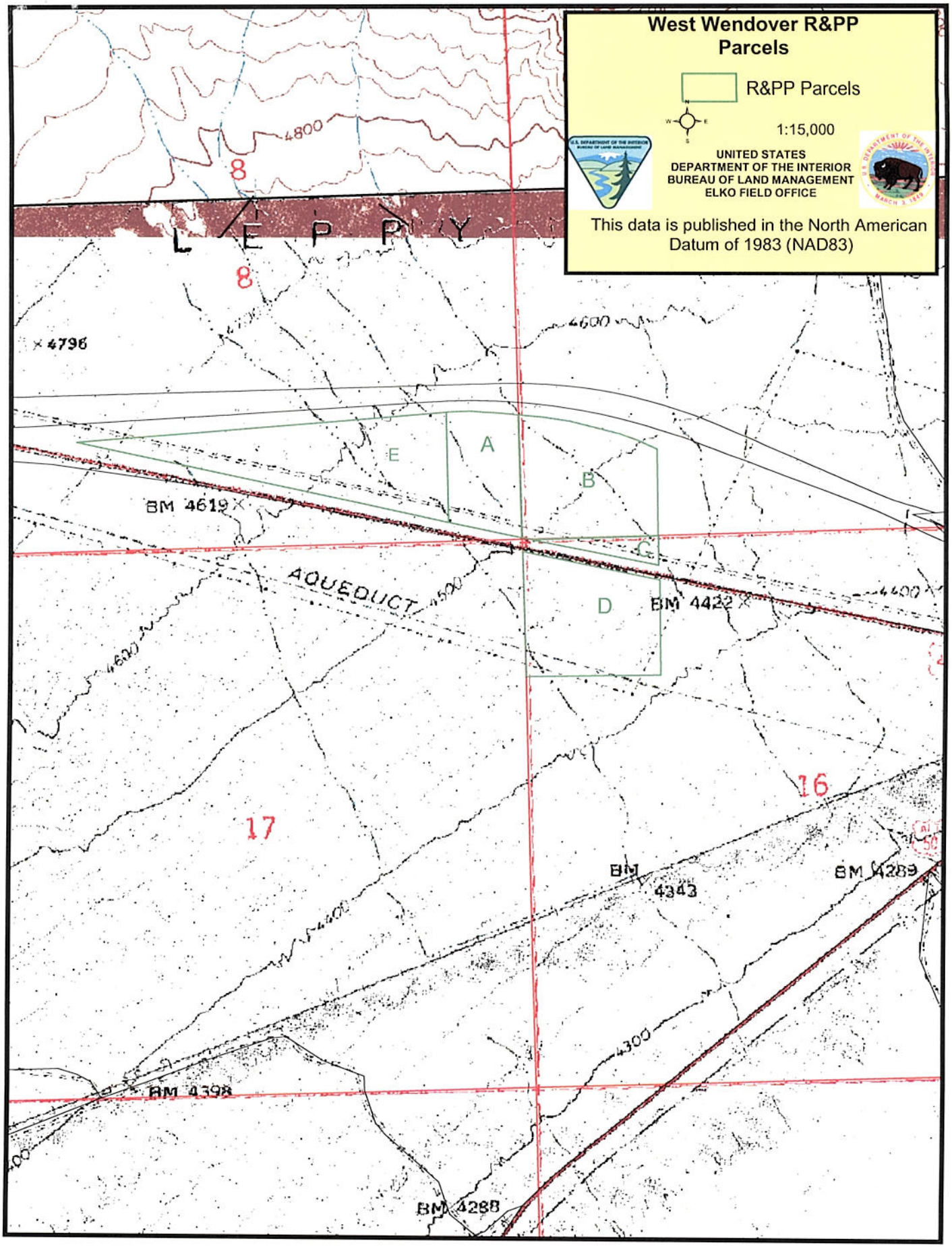

"NO WARRANTY IS MADE BY THE BUREAU OF LAND MANAGEMENT AS TO THE ACCURACY, RELIABILITY, OR COMPLETENESS OF THESE DATA FOR INDIVIDUAL USE OR AGGREGATE USE WITH OTHER DATA."

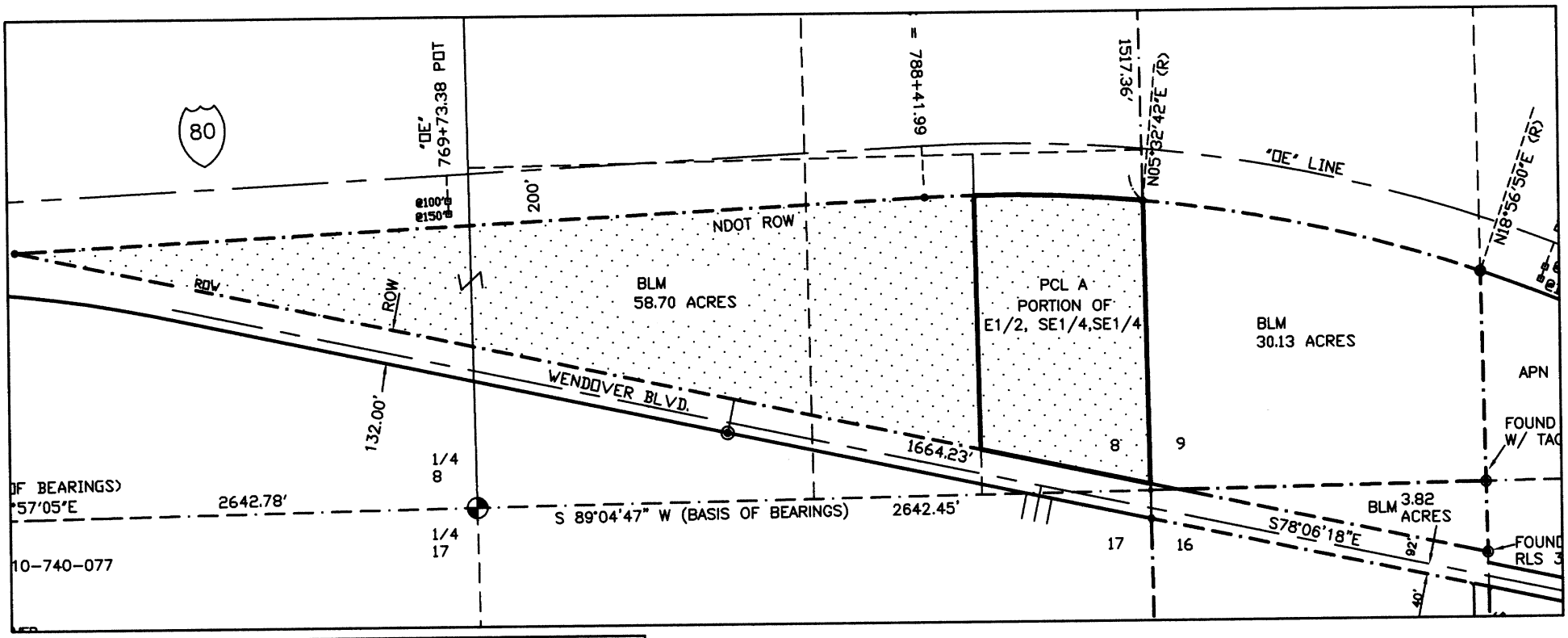

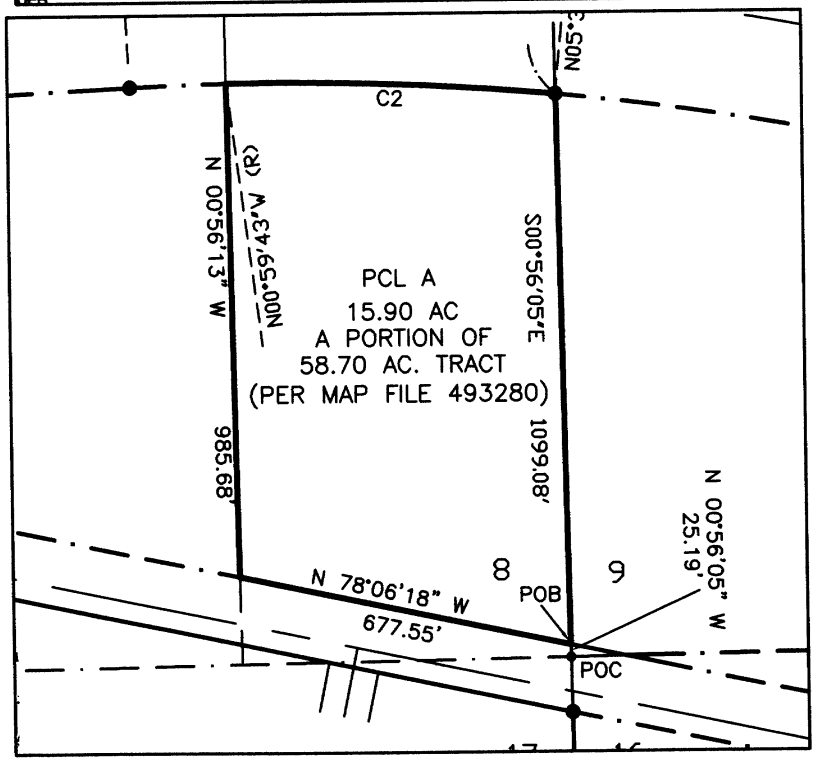



NOT TO SCALE

NOTE: THIS EXHIBIT MAP REFERENCES LEASE PARCELS AND IS NOT INTENDED TO SUBDIVIDE EXISTING PARCELS

CURVE TABLE			
CURVE	LENGTH	RADIUS	DELTA
C2	662.06	5800.00	6°32'25"

LEGEND
POB POINT OF BEGINNING
POC POINT OF COMMENCEMENT

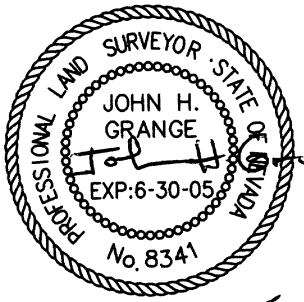

5-9-2005

EXHIBIT MAP – 15.90 ACRE PARCEL

A PORTION OF THE E1/2,SE1/4,SE1/4
SECTION 8, T33N, R70E, MDB&M

GRANGE SURVEYING, Inc.

218 Holyoke Drive
Spring Creek, Nevada 89815

Phone 775-753-3610
Fax 775-753-7078

Legal Description
A Portion of the S1/2 of Section 8, T. 33 N. R. 70 E., M.D.B.&M.

Basis of Bearings:
S 89°04'47" W, being the south line of the southeast quarter (SE¼) of Section 8, Township 33 North, Range 70 East, M.D..B. & M., Elko County, Nevada, as shown by Record of Survey file No. 467200 of the Elko County, Nevada Records.

This legal describes a 42.794 tract of land, being a portion of the south half (S1/2) of Section 8, T. 33 N. R. 70 E., M.D.B.&M., said 42.794 acre tract of land is a portion of a 58.70 acre tract as shown by Record of Survey file No. 493280 of the Elko County, Nevada Records and is more particularly described by metes and bounds as follows:

Commencing at the southeast corner of Section 8, T. 33 N. R. 70 E., M.D.B.&M.; thence N 00°56'05" W, 25.19 feet to a point on the northeasterly right of way line of Wendover Boulevard (132.00 foot wide R.O.W.), thence N 78°06'18" W, along said Wendover Boulevard right of way, 677.55 feet to a point on the west line of the east half (E1/2) of the southeast quarter (SE1/4) of the southeast quarter (SE1/4) of said Section 8, said point being the Point of Beginning; thence continuing along the northeasterly right of way line of said Wendover Boulevard, N 78°06'18" W, a distance of 3867.03 feet to a point on the southerly right of way line of IH 80, said point being 200.00 feet south of and perpendicular to N.D.O.T. baseline station "OE" 752+62.06; thence along said southerly right of way line of IH 80, said right of way line being parallel and 200.00 feet south of said baseline "OE", the following two (2) courses and distances: 1.) N 87°05'13" E, a distance of 3579.37 feet to a point of curvature for a non-tangent curve to the right, having a radius of 5800.00 feet, a radial line to said point bears N 02°54'15" W; 2.) thence easterly, along said curve, through a central angle of 01°54'32", an arc distance of 193.25 feet to a point of non-tangency, a radial line to said point bears N 00°59'43" W, said point also being on the east half (E1/2) of the southeast quarter (SE1/4) of the southeast quarter (SE1/4) of said Section 8; thence departing said southerly right of way line of IH 80, S 00°56'13" E along the west line of the east half (E1/2) of the southeast quarter (SE1/4) of the southeast quarter (SE1/4) of said Section 8, a distance of 985.68 feet to the Point of Beginning.

Containing 42.794 acres of land, more or less.



3-5-2006

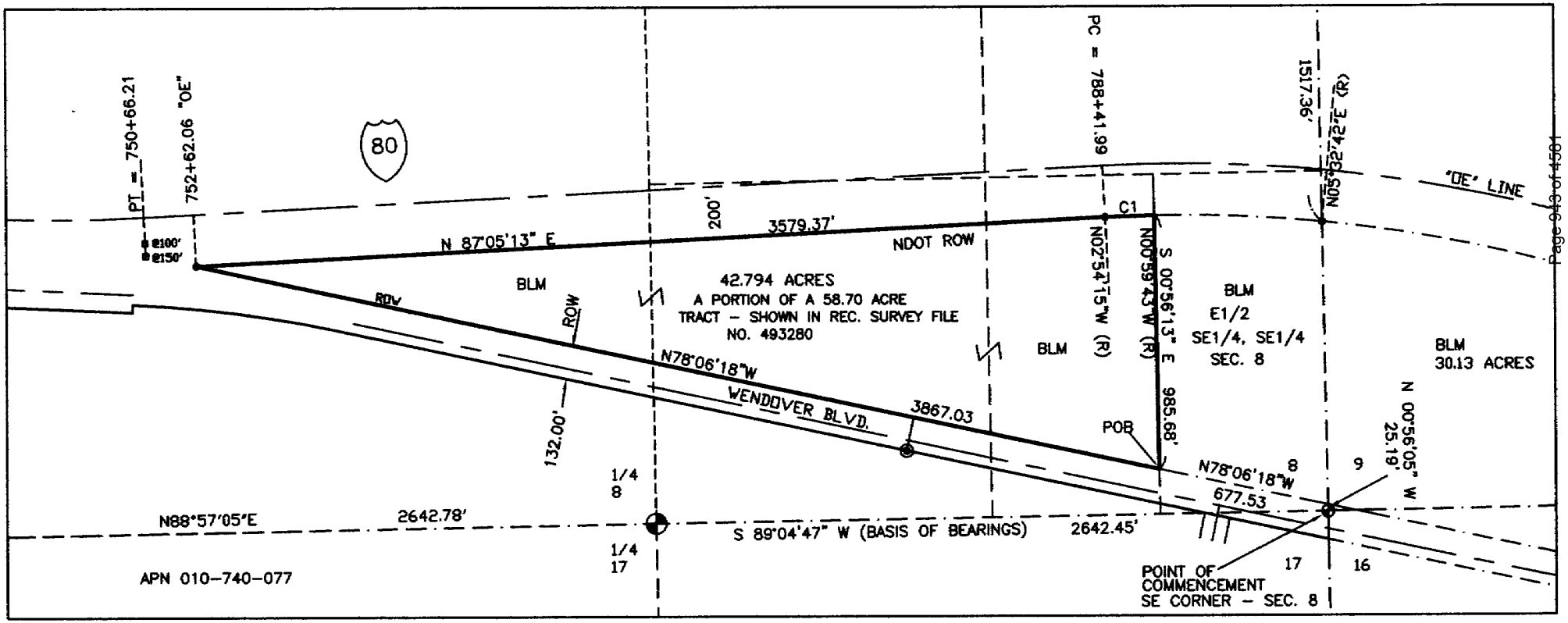

NOTE: THIS EXHIBIT MAP REFERENCES LEASE PARCELS AND IS NOT INTENDED TO SUBDIVIDE EXISTING PARCELS

NOT TO SCALE

PROFESSIONAL LAND SURVEYOR STATE OF NEVADA
JOHN H. GRANGE
EXP:6-30-07
No. 8341
3-5-2006

CURVE TABLE			
CURVE	LENGTH	RADIUS	DELTA
C1	193.25	5800.00	01°54'32"

LEGEND
POB POINT OF BEGINNING
POC POINT OF COMMENCEMENT

EXHIBIT MAP - 42.794 ACRE PARCEL

A PORTION OF A 58.70 AC. PARCEL AS SHOWN ON RECORD OF SURVEY MAP FILE NO. 493280.

SECTION 8, T33N, R70E, MDB&M

GRANGE SURVEYING, Inc.

218 Holyoke Drive
Spring Creek, Nevada 89815

Phone 775-753-3610
Fax 775-753-7078

Legal Description - Parcel B
A Portion of the SW14 of the SW¼ of Section 9, T. 33 N. R. 70 E., M.D.B.&M.

Basis of Bearings: S 89°02'50" W, being the south line of the southwest quarter (SW¼) of Section 9, Township 33 North, Range 70 East, M.D..B. & M., Elko County, Nevada, as shown by Record of Survey file No. 467200 of the Elko County, Nevada Records.

This legal describes a 30.13 acre tract of land, being a portion of the southwest quarter (SW¼) of the southwest quarter (SW¼) of Section 9, T. 33 N. R. 70 E., M.D.B.&M., said 30.13 acre tract of land is shown by Record of Survey file No. 493280 of the Elko County, Nevada Records and is more particularly described by metes and bounds as follows:

Commencing at the southwest corner of Section 9, T. 33 N., R. 70 E., M.D.B.& M.; thence N 00°56'05" W, along the west line of said Section 9, 25.19 feet to a point on the northeasterly right of way line of Wendover Boulevard (132.00 foot wide R.O.W.), said point being the Point of Beginning; thence N 00°56'05" W, along the west line of said Section 9, 1099.08 feet to a point on a curve of the southerly right of way line of Interstate Highway 80 (I.H. 80), said curve having a radius of 5800.00, a radial line to said point bears N 05°32'42" E; thence southeasterly along said curve, through a central angle of 13°24'08, an arc distance of 1356.70 feet to a point on the east line of the southwest quarter (SW¼) of the southwest quarter (SW¼) of said Section 9, a radial line to said point bears N 18°56'50" E; thence S 00°56'01" E, along the east line of the southwest quarter (SW¼) of the southwest quarter (SW¼) of said Section 9, 815.21 feet to the southeast corner of the southwest quarter (SW¼) of the southwest quarter (SW¼) said Section 9; thence S 89°02'50" W, along the south line of the southwest quarter (SW¼) of the southwest quarter (SW¼) of said Section 9, 1207.47 feet to a point on the northeasterly right of way line of said Wendover Boulevard; thence N 78°06'18" W, along said right of way line, 113.29 feet to the Point of Beginning.

Containing 30.13 acres of land, more or less.

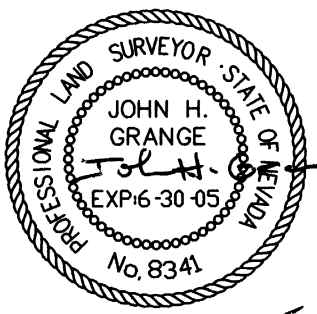

5-9-2005

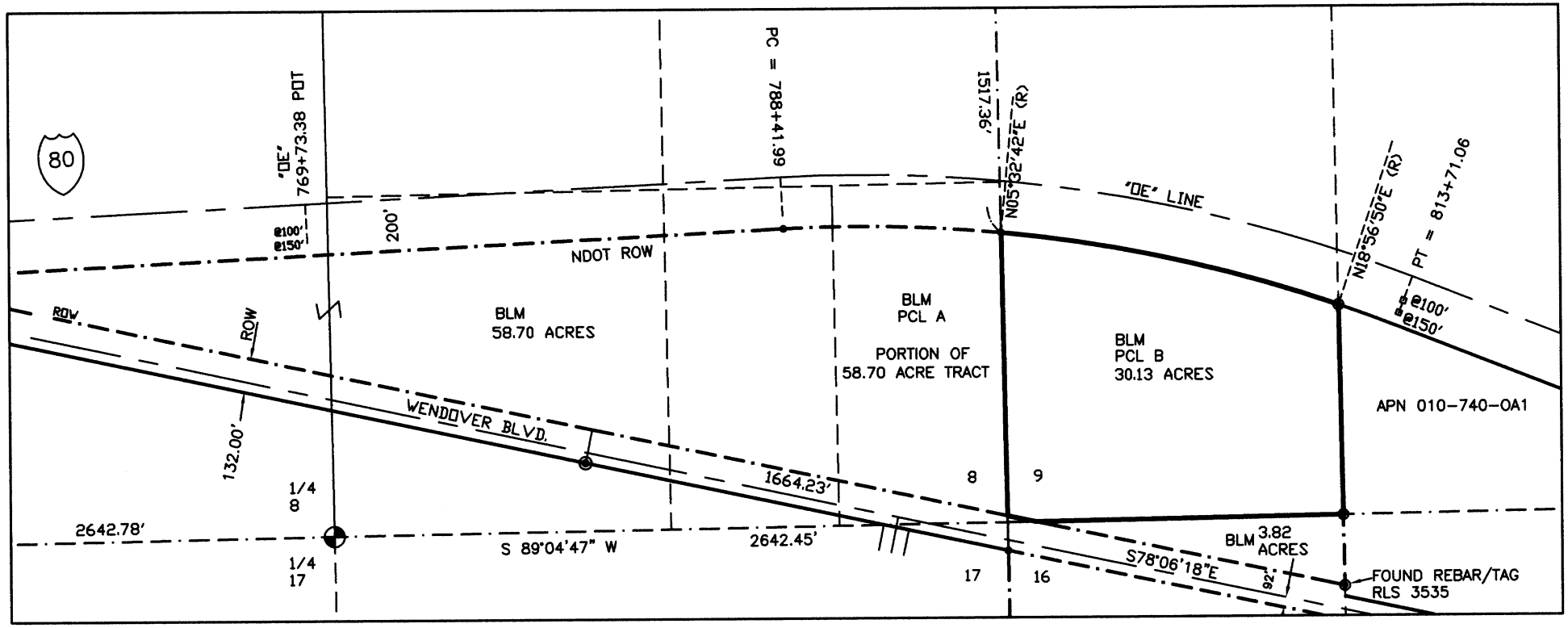

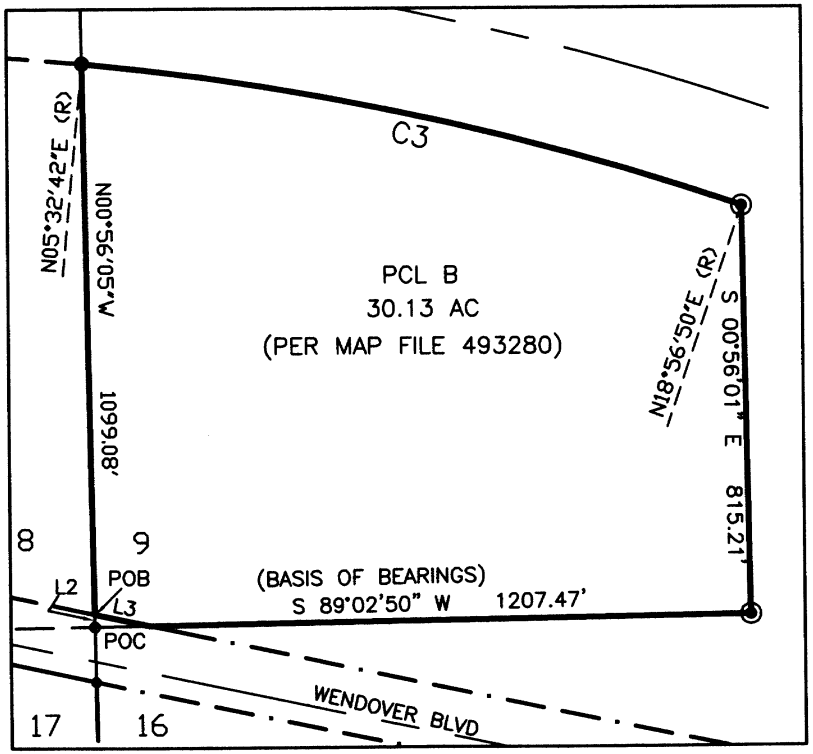

NOT TO SCALE

NOTE: THIS EXHIBIT MAP REFERENCES LEASE PARCELS AND IS NOT INTENDED TO SUBDIVIDE EXISTING PARCELS

CURVE TABLE			
CURVE	LENGTH	RADIUS	DELTA
C3	1356.70	5800.00	13°24'08"

LINE TABLE		
LINE	LENGTH	BEARING
L2	25.19	N00°56'05"W
L3	113.29	N78°06'18"W

LEGEND
POB POINT OF BEGINNING
POC POINT OF COMMENCEMENT

EXHIBIT MAP – 30.13 ACRE PARCEL

A PORTION OF THE SW1/4,SW1/4,
SECTION 9, T33N, R70E, MDB&M

PROFESSIONAL LAND SURVEYOR STATE OF NEVADA
JOHN H. GRANGE
EXP:6-30-05
No. 8341

5-9-2005

GRANGE SURVEYING, Inc.

218 Holyoke Drive
Spring Creek, Nevada 89815

Phone 775-753-3610
Fax 775-753-7078

Legal Description - Parcel C
A Portion of the NW¼ of the NW1/4 of Section 16, T. 33 N. R. 70 E., M.D.B.&M.

Basis of Bearings: S 89°02'50" W, being the south line of the southwest quarter (SW¼) of Section 9, Township 33 North, Range 70 East, M.D..B. & M., Elko County, Nevada, as shown by Record of Survey file No. 467200 of the Elko County, Nevada Records.

This legal describes a 3.82 acre tract of land, being a portion of the northwest quarter (NW¼) of the northwest quarter (NW¼) of Section 16, T. 33 N. R. 70 E., M.D.B.&M., said 3.82 acre tract of land is shown by Record of Survey file No. 493280 of the Elko County, Nevada Records and is more particularly described by metes and bounds as follows:

Commencing at the northwest corner of Section 16, T. 33 N., R. 70 E., M.D.B.& M.; thence N 89°02'50" E, along the north line of said Section 16, 110.46 feet to a point on the northeasterly right of way line of Wendover Boulevard (132.00 foot wide R.O.W.), said point being the Point of Beginning; thence continuing N 89°02'50" E, along the north line of said Section 16, 1207.47 feet to the northeast corner of the northwest quarter (NW¼) of the northwest quarter (NW¼) of said Section 16; thence S 00°56'45" E, along the east line of the northwest quarter (NW¼) of the northwest quarter (NW¼) of said Section 16, 275.37 feet to a point on the northeasterly right of way line of said Wendover Boulevard; thence N 78°06'18" W, along said right of way line, 1238.44 feet to the Point of Beginning.

Containing 3.82 acres of land, more or less.

PROFESSIONAL LAND SURVEYOR · STATE OF NEVADA
JOHN H. GRANGE
EXP: 6-30-05
No. 8341

5-9-2005

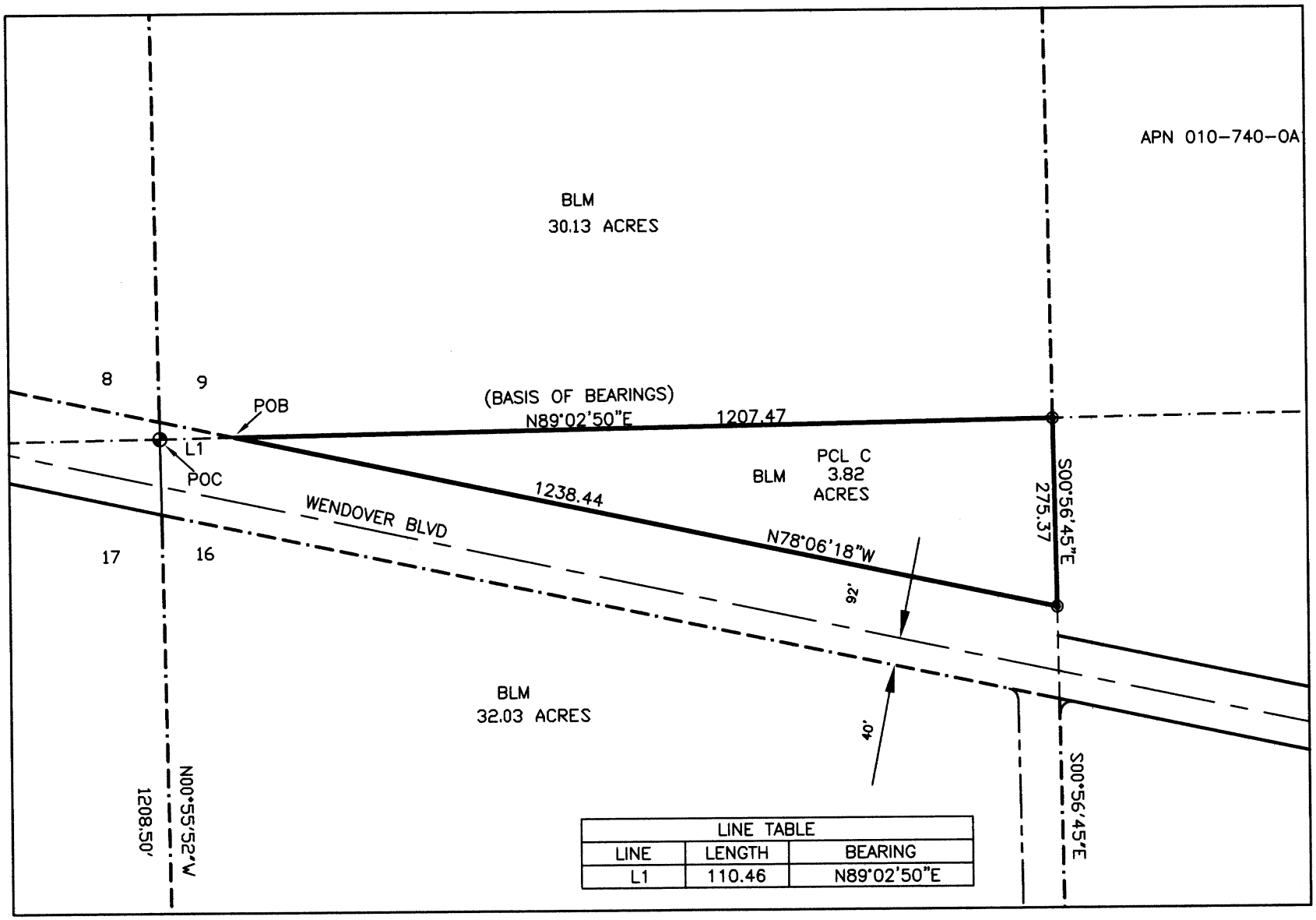

LINE TABLE		
LINE	LENGTH	BEARING
L1	110.46	N89°02'50"E

NOTE: THIS EXHIBIT MAP REFERENCES LEASE PARCELS
AND IS NOT INTENDED TO SUBDIVIDE EXISTING PARCELS

NOT TO SCALE

LEGEND
POB POINT OF BEGINNING
POC POINT OF COMMENCEMENT

EXHIBIT MAP – 3.82 ACRE PARCEL

A PORTION OF THE NW1/4,NW1/4
SECTION 16, T33N, R70E, MDB&M

PROFESSIONAL LAND SURVEYOR · STATE OF NEVADA
JOHN H. GRANGE
EXP:6-30-05
No. 8341

5-9-2005

GRANGE SURVEYING, Inc.

218 Holyoke Drive
Spring Creek, Nevada 89815

Phone 775-753-3610
Fax 775-753-7078

Legal Description - Parcel D
A Portion of the NW¼ of the NW1/4 of Section 16, T. 33 N. R. 70 E., M.D.B.&M.

Basis of Bearings: S 89°02'50" W, being the south line of the southwest quarter (SW¼) of Section 9, Township 33 North, Range 70 East, M.D..B. & M., Elko County, Nevada, as shown by Record of Survey file No. 467200 of the Elko County, Nevada Records.

This legal describes a 32.03 acre tract of land, being a portion of the northwest quarter (NW¼) of the northwest quarter (NW¼) of Section 16, T. 33 N. R. 70 E., M.D.B.&M., said 32.03 acre tract of land is shown by Record of Survey file No. 493280 of the Elko County, Nevada Records and is more particularly described by metes and bounds as follows:

Commencing at the northwest corner of Section 16, T. 33 N., R. 70 E., M.D.B.& M.; thence S 00°55'52" E, along the west line of said Section 16, 110.19 feet to a point on the southwesterly right of way line of Wendover Boulevard (132.00 foot wide R.O.W.), said point being the Point of Beginning; thence S 78°06'18" E, along the southwesterly right of way line of said Wendover Boulevard, 1351.76 feet to a point on the east line of the northwest quarter (NW¼) of the northwest quarter (NW¼) of said Section 16; thence S 00°56'45" E, 908.45 to the southeast corner of the northwest quarter (NW¼) of the northwest quarter (NW¼) of said Section 16; thence S 89°04'13" W, along the south line of the northwest quarter (NW¼) of the northwest quarter (NW¼) of said Section 16, 1318.27 feet to a point on the west line of said Section 16; thence N 00°55'52" W, along the west line of said Section 16, 1208.50 feet to the Point of Beginning.

Containing 32.03 acres of land, more or less.

PROFESSIONAL LAND SURVEYOR · STATE OF NEVADA
JOHN H. GRANGE
EXP:6-30-05
No. 8341

5-9-2005

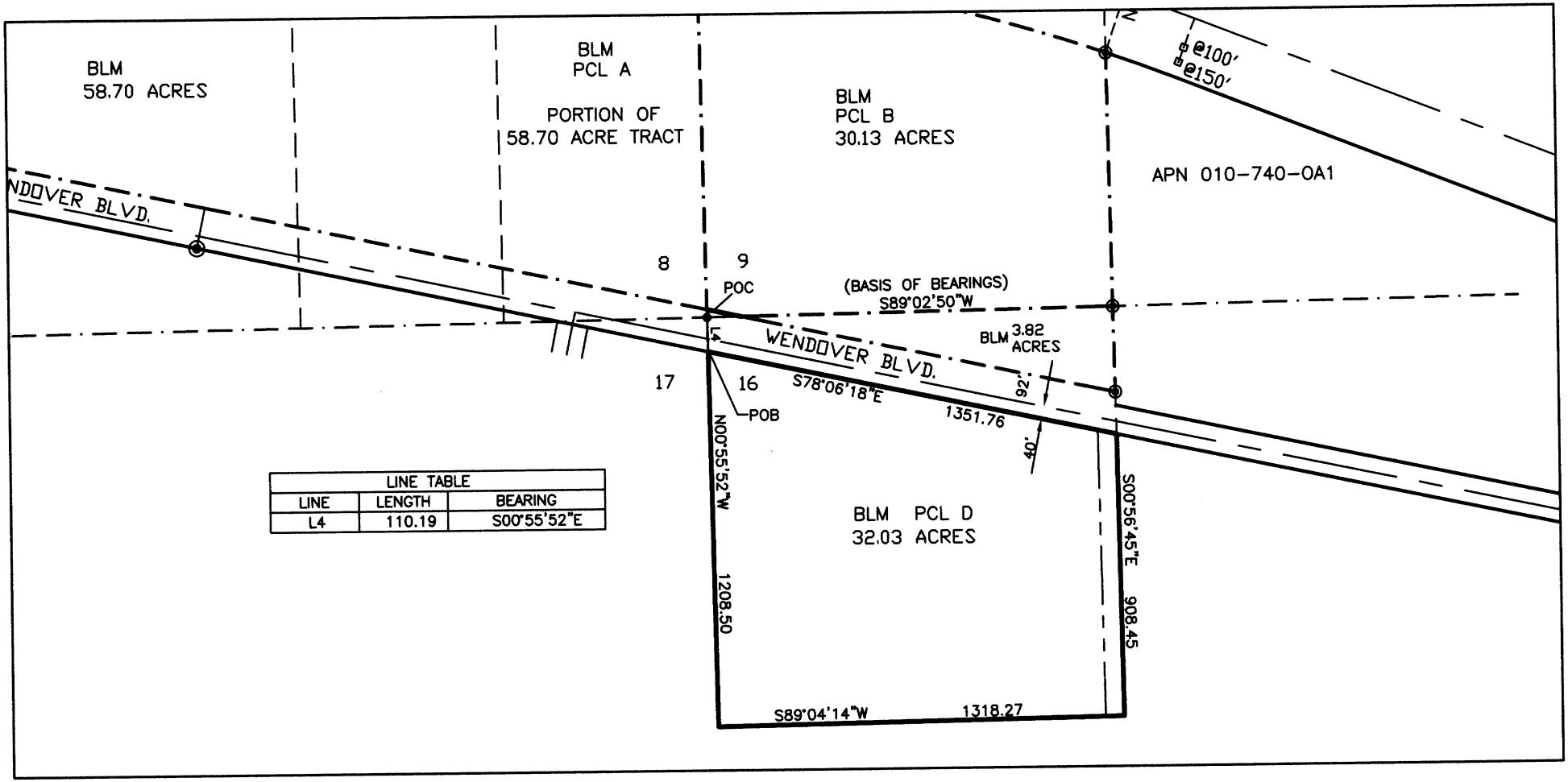

LINE TABLE		
LINE	LENGTH	BEARING
L4	110.19	S00°55'52"E

NOTE: THIS EXHIBIT MAP REFERENCES LEASE PARCELS AND IS NOT INTENDED TO SUBDIVIDE EXISTING PARCELS

NOT TO SCALE

LEGEND
POB POINT OF BEGINNING
POC POINT OF COMMENCEMENT

EXHIBIT MAP – 32.03 ACRE PARCEL

A PORTION OF THE NW1/4,NW1/4,
SECTION 16, T33N, R70E, MDB&M

PROFESSIONAL LAND SURVEYOR STATE OF NEVADA
JOHN H. GRANGE
EXP:6-30-05
No. 8341

5-9-2005

CITY OF WEST WENDOVER
P.O. Box 2825 • 1111 N. Gene L. Jones Way • West Wendover, NV 89883
Office (775) 664-3081 Fax (775) 664-3720

PUBLIC NOTICE PUBLIC NOTICE PUBLIC NOTICE

WEST WENDOVER CITY COUNCIL, REGULAR MEETING

DATE: April 04, 2023
TIME: 7:00 PM

LOCATION:Council Chambers #137, West Wendover City Hall

(THE MAYOR OR MAYOR PRO-TEM RESERVES THE RIGHT TO CHANGE THE ORDER OF THE AGENDA AND IF THE AGENDA IS NOT COMPLETE, TO RECESS THE MEETING AND CONTINUE ON ANOTHER SPECIFIED DATE AND TIME)

(IN THE EVENT THAT PUBLIC COMMENT IS ALLOWED DURING ANY AGENDA ITEM, THE MAYOR OR MAYOR PRO-TEM RESERVES THE RIGHT TO LIMIT SUCH COMMENT AND TERMINATE ANY FURTHER COMMENT)

(EACH SPEAKER, AFTER BEING ACKNOWLEDGED BY THE CHAIR, SHALL COME TO THE PODIUM AND IF REQUIRED FILL OUT A REQUEST TO SPEAK FORM, THEN WILL SPEAK DIRECTLY INTO THE MICROPHONE, AND STATE THEIR NAME, RESIDENCY AND ANY ORGANIZATION THEY ARE REPRESENTING FOR THE RECORD.)

(THESE PROCEEDINGS ARE BEING VIDEO RECORDED. THE COUNCIL MEETINGS CAN BE VIEWED ON THE INTERNET AT www.westwendovercity.com WITHIN 24 HOURS OF THE END OF THE MEETING.)

AGENDA

1. **CALL TO ORDER AND ROLL CALL**
   - a. **Roll Call**
2. **PLEDGE OF ALLEGIANCE**
3. **COMMENTS FROM THE GENERAL PUBLIC**

   Requires a sign in sheet and request of the Council to speak, limitation of three minutes.
4. **APPROVAL OF THE MINUTES (For Possible Action)**
   - a. **City Council - Regular Meeting - Mar 21, 2023 7:00 PM**
   - b. **City Council - Special Meeting - Mar 28, 2023 6:00 PM**
5. **CONSENT CALENDAR**
   - a. **Discussion and Decision to Adopt Resolution #2023-04; A Resolution Repealing Resolution #2005-01 Regarding Wendover Will Landmark Fund and Other Matters Appropriately Related Thereto (For Possible Action)**

Report By Chief Financial Officer

Review/Comment/Action: City Council

b. **Discussion and Decision to Adopt Resolution #2023-05; A Resolution Repealing Resolution #2022-02 and Establishing New Water and Sewer Service Charges, Fees and Deposits (For Possible Action)**

Report By Chief Financial Officer

Review/Comment/Action: City Council

c. **Discussion and Decision to Adopt Resolution #2023-06; A Resolution Repealing Resolution #2021-14 and Establishing a New Right-of-Way Toll Amount to be Paid to the City of West Wendover by the West Wendover Municipal Sewer Utility (For Possible Action)**

Report By Chief Financial Officer

Review/Comment/Action: City Council

6. NEW BUSINESS

a. **Discussion and Decision to Authorize the City Manager to Prepare and Submit a Gap Financing Application with the Nevada State Infrastructure Bank for Possible Financial Assistance for the Completion of the West Wendover Fire Station Emergency Operations Center and Other Matters Appropriately Related Thereto (For Possible Action)**

Report By City Manager

Review/Comment/Action: City Council

7. DEPARTMENT REPORTS

1. **Police Chief**
2. **Fire Chief**
3. **City Clerk/Records Officer**
4. **Chief Financial Officer**
5. **Public Works Director**
6. **City Manager**

8. COMMUNICATIONS

Reports by Elected Officials

9. APPROVAL OF THE CLAIMS

a. **Claims for April 4, 2023 (For Possible Action)**

10. COMMENTS FROM THE GENERAL PUBLIC

Requires a sign in sheet and request of the Council to speak, limitation of three minutes.

11. NEXT MEETING DATE AND ADJOURNMENT

a. **Adjournment (For Possible Action)**

<u>This notice is posted at the following locations</u>:
West Wendover City Hall, West Wendover Library,
Smith's Food & Drug, Nevada Post Office

Members of the public who are disabled and require special accommodations or assistance at the meeting are requested to notify the City Clerk in writing at the City of West Wendover, 1111 N. Gene L. Jones Way, P.O. Box 2825, West Wendover, Nevada, or by calling (775) 664-3081.

CITY OF WEST WENDOVER
P.O. Box 2825 • 1111 N. Gene L. Jones Way • West Wendover, NV 89883
Office (775) 664-3081 Fax (775) 664-3720

PUBLIC MEETING NOTICE

The West Wendover City Council will meet in a regular session on April 4, 2023, at the West Wendover City Hall, Council Chambers Room #137 at 7:00 p.m. Attached with this notice is the agenda for said meeting of the Council. This notice is posted pursuant to N.R.S. 241 020 as amended by the 1997 Legislature. This notice is posted at the following places no later than March 30, 2023.

WEST WENDOVER CITY HALL
WEST WENDOVER BRANCH LIBRARY
SMITH'S FOOD & DRUG STORE
WEST WENDOVER POST OFFICE

NOTICE TO PERSONS WITH DISABILITIES

Members of the public who are disabled and require special accommodations or assistance at the meeting are requested to notify the City Clerk in writing at the City of West Wendover, 1111 N. Gene L. Jones Way, P.O. Box 2825, West Wendover, Nevada, or by calling (775) 664-3081.

CITY OF WEST WENDOVER
P.O. Box 2825 • 1111 N. Gene L. Jones Way • West Wendover, NV 89883
Office (775) 664-3081 Fax (775) 664-3720

WEST WENDOVER CITY COUNCIL, MINUTES OF THE REGULAR MEETING OF APRIL 04, 2023

1. CALL TO ORDER AND ROLL CALL

Attendee Name	Title	Status	Arrived
Nick Flores	Councilman	Absent	
Johnny Gorum	Councilman	Present	
John B. Hanson	Councilman	Present	
Gabi Soriano	Councilwoman	Present	
Robert Trujillo	Councilman	Present	
Jasie Holm	Mayor	Present	
Chris Melville	City Manager	Present	
Cal Kunz	Chief of Police	Present	
Alina Ceballos	Chief Financial Officer	Present	
Jeff Knudtson	Fire Chief	Present	
Raul Naranjo	Public Works Director	Present	
Anna Bartlome	City Clerk/Records Officer	Present	

Others Present: Paige Ward, Maisie Ward, Brooke Ward and Dennis Draves

Mayor Holm called the meeting to order at 7:00 p.m. in the West Wendover City Hall, Council Chambers #137. All those present and excused are noted above.

2. PLEDGE OF ALLEGIANCE

Mayor Holm led those present in the Pledge of Allegiance.

3. COMMENTS FROM THE GENERAL PUBLIC

Paige Ward thanked the Council for voting against Planned Parenthood.

4. APPROVAL OF THE MINUTES (For Possible Action)

a. City Council - Regular Meeting - Mar 21, 2023 7:00 PM

RESULT:	**ACCEPTED [UNANIMOUS]**
MOVER:	Robert Trujillo, Councilman
SECONDER:	John B. Hanson, Councilman
AYES:	Johnny Gorum, John B. Hanson, Gabi Soriano, Robert Trujillo
ABSENT:	Nick Flores

b. City Council - Special Meeting - Mar 28, 2023 6:00 PM

Council Member Trujillo made a motion to approve the minutes of the regular meeting of March 21, 2023 and the minutes of the special meeting of March 28, 2023. The motion was seconded by Council Member Hanson and passed unanimously.

RESULT:	**ACCEPTED [UNANIMOUS]**
MOVER:	Robert Trujillo, Councilman
SECONDER:	John B. Hanson, Councilman
AYES:	Johnny Gorum, John B. Hanson, Gabi Soriano, Robert Trujillo
ABSENT:	Nick Flores

5. CONSENT CALENDAR

a. Discussion and Decision to Adopt Resolution #2023-04; A Resolution Repealing Resolution #2005-01 Regarding Wendover Will Landmark Fund and Other Matters Appropriately Related Thereto (For Possible Action)

Report By Chief Financial Officer

Review/Comment/Action: City Council

Alina Ceballos explained that the Wendover Will Fund was established with the intent of being self-sustaining. Donations and special revenue sources have not been consistent or reliable and every year a transfer from the General Fund has been necessary to cover expenses. Alina further stated that the auditors (HintonBurdick) has recommended the fund be repealed and created as a department in the General Fund.

Council Member Trujillo made a motion to adopt Resolution #2023-04; a resolution repealing Resolution #2005-01 regarding Wendover Will Landmark Fund. The motion was seconded by Council Member Gorum and passed unanimously.

RESULT:	**ADOPTED [UNANIMOUS]**
MOVER:	Robert Trujillo, Councilman
SECONDER:	Johnny Gorum, Councilman
AYES:	Johnny Gorum, John B. Hanson, Gabi Soriano, Robert Trujillo
ABSENT:	Nick Flores

b. Discussion and Decision to Adopt Resolution #2023-05; A Resolution Repealing Resolution #2022-02 and Establishing New Water and Sewer Service Charges, Fees and Deposits (For Possible Action)

Report By Chief Financial Officer

Review/Comment/Action: City Council

Alina Ceballos explained that the resolution is for water and sewer rates but the change will only be for the sewer rates as the water rate will keep its current increase. The Sewer Fund has two outstanding bonds requiring compliance issues. To meet those compliance issues, to help keep up with inflation, and to keep the sewer fund healthy we are proposing an additional 1% increase over the scheduled 3% increase in sewer rates over the next three years. The base rate is already scheduled to increase 3% on July 1, 2023, from $33.86 to $34.88. That is a $1.02 increase. An additional 1% will increase that by $0.34 cents for a total $1.36 increase. Residents will see the monthly rate increase from $33.86 to $35.22 for fiscal year 2024. The rate will increase 5% in fiscal year 2025 and 6% in fiscal year 2026. Residents will see the monthly rate increase from $35.22 to $36.99 for fiscal year 2025 and from $36.99 to $39.21 for fiscal year 2026. After fiscal year 2026 rate increases will resort back to 3% per year. The

excess usage rate will also increase 4% in fiscal year 2024 from $5.01 to $5.21 and increase 5%, from $5.21 to $5.47 in fiscal year 2025 and 6%, from $5.47 to $5.80 in fiscal year 2026. The rates will be effective beginning July 1, 2023.

Council Member Trujillo made a motion to adopt Resolution #2023-05; a resolution repealing Resolution #2022-02 and establishing new water and sewer service charges, fees and deposits. The motion was seconded by Council Member Hanson and passed unanimously.

RESULT:	**ADOPTED [UNANIMOUS]**
MOVER:	Robert Trujillo, Councilman
SECONDER:	John B. Hanson, Councilman
AYES:	Johnny Gorum, John B. Hanson, Gabi Soriano, Robert Trujillo
ABSENT:	Nick Flores

c. Discussion and Decision to Adopt Resolution #2023-06; A Resolution Repealing Resolution #2021-14 and Establishing a New Right-of-Way Toll Amount to be Paid to the City of West Wendover by the West Wendover Municipal Sewer Utility (For Possible Action)

Report By Chief Financial Officer

Review/Comment/Action: City Council

Alina Ceballos explained that the sewer right-of-way toll was initially set at 12.5% in January 2015 and was reduced in fiscal year 2021 to 8.327%. Alina stated that we are asking to reduce the sewer right-of-way toll to 4% effective July 1, 2023.

Council Member Hanson made a motion to adopt Resolution #2023-06; a resolution repealing Resolution #2021-14 and establishing a new right-of-way toll amount to be paid to the City of West Wendover by the West Wendover Municipal Sewer Utility. The motion was seconded by Council Member Trujillo and passed unanimously.

RESULT:	**ADOPTED [UNANIMOUS]**
MOVER:	John B. Hanson, Councilman
SECONDER:	Robert Trujillo, Councilman
AYES:	Johnny Gorum, John B. Hanson, Gabi Soriano, Robert Trujillo
ABSENT:	Nick Flores

6. NEW BUSINESS

a. Discussion and Decision to Authorize the City Manager to Prepare and Submit a Gap Financing Application with the Nevada State Infrastructure Bank for Possible Financial Assistance for the Completion of the West Wendover Fire Station Emergency Operations Center and Other Matters Appropriately Related Thereto (For Possible Action)

Report By City Manager

Review/Comment/Action: City Council

Chris Melville explained that he is asking for authorization to file the grant application with the Nevada Infrastructure Bank for possible gap financing on the West Wendover Fire Station Emergency Operations Center. Chris stated that the financing would be for the contingencies for this project which should narrow down greatly as the project continues to move forward.

Council Member Trujillo made a motion to authorize the City Manager to prepare and submit a Gap Financing Application with the Nevada State Infrastructure Bank for possible financial assistance for the completion of the West Wendover Fire Station Emergency Operations Center. The motion was seconded by Council Member Soriano and passed unanimously.

RESULT:	**APPROVED [UNANIMOUS]**
MOVER:	Robert Trujillo, Councilman
SECONDER:	Gabi Soriano, Councilwoman
AYES:	Johnny Gorum, John B. Hanson, Gabi Soriano, Robert Trujillo
ABSENT:	Nick Flores

7. DEPARTMENT REPORTS

1. Police Chief

Cal Kunz had nothing to add to his report.

Council Member Soriano asked if the police have more stickers in stock. Cal stated that yes, they have received the stickers.

2. Fire Chief

Jeff Knudtson had nothing to add to his report.

Council Member Gorum asked about the last permit issued for Santiago was on the building permit list but he figured out it was for a new trailer in that mobile home park.

3. City Clerk/Records Officer

Anna Bartlome had nothing to add to her report.

4. Chief Financial Officer

Alina Ceballos had nothing to add to her report.

5. Public Works Director

Raul Naranjo had nothing to add to his report.

6. City Manager

Chris Melville stated that we are moving forward with new microphones in the council chambers.

8. COMMUNICATIONS

Reports by Elected Officials

Council Member Hanson thanked the City staff for the good job they do in keeping the City nice and working in adverse conditions.

Council Member Trujillo thanked the Department Heads for all they do.

Exhibit 2

SOURCES AND USES OF PROCEEDS TABLE

(NOTE: Please attach as Exhibit 2a, detailed cost estimates, bids, and construction contracts, etc. to support data provided in the table.)

PROJECT USES	*PROJECT FUNDING SOURCES*						
	Estimated Life of the Project	**SIB**	**[Applicant]**	**Other** USDA Loan	**Other** Nevada CDBG Grant	**Other** USDA Grant	**TOTAL**
Land Acquisition	38			$840,000			$840,000
Building Construction/Renovation		$1,642,623	$2,025,335	$7,329,416	$500,000	$200,000	$11,697,374
Construction Contingency			$299,933				$299,933
Machinery/Equipment							
Engineering/Architectural/ Design/Permits/Environmental				$485,117			$485,117
SIB Origination Fee							
Other: Interim Loan Interest Exp				$100,000			$100,000
Other: Cost of Interim & Bond Counsel				$152,267		$200,000	$152,267
TOTAL		$1,642,623	$2,325,268	$8,906,800	$500,000	$200,000	$13,574,691

Please provide the justification in determining the useful life of the Project:

EXHIBIT 2A-01
Funding/Cost
Analysis 8-8-2023

Analysis 8-8-2023
City of West Wendover - Fire Station EOC

Funding Sources	**Sub Items**	**Total**
USDA Rural Development (Loan)		$8,906,800.00
Applicant Cash		$2,325,268.00
Nevada CDBG		$500,000.00
USDA Grant		$200,000.00
Other Contribution/Gap Financing		$1,642,623.00
Total Funding		**$13,574,691.00**

Project Expenses

A/E Design Pre Constr Fees, Phase 1A-1B		$410,117.00
Other Engineering Expenses		$75,000.00
Total Construction Costs		$11,997,307.00
Sub Total Base Construction	*$11,054,268*	
Sub Total Construction Soft Costs	*$943,039*	
Soft Costs		
Phase 2A/E Design and Precon Fees	*$462,765*	
Permits & Fees	*$79,288*	
FF&E Allowance (other than FS Equip)	*$101,053*	
**Construction Contingencies*	*$299,933*	
(Access Road now included)	*$0*	
Land Purchase		$840,000.00
Interim Interest		$100,000.00
Bond Counsel and Related Fees		$75,000.00
Cost for Interim Loan		$77,267.00
Total Costs		**$13,574,691.00**

Funding Over/Short		$0.00

EXHIBIT 2A-02
Design and Construction Cost

West Wendover
Fire Station 13

Guaranteed Maximum Price

Prepared on: 7-Aug-23

#	Description		GMP	BREAKOUTS Included in base Access Road	ALTERNATES NOT included ALT #1 Cross Street Visitor Parking
	GENERAL		**$402,036**	**$0**	**$6,595**
GEN1	General Requirements		**$136,878**	$0	$6,595
GEN2	Scaffolding & Equipment		**$129,454**	$0	$0
GEN3	Waste Management & Cleaning Requirements		**$135,704**	$0	$0
	DEMOLITION / OFF-SITE INFRASTRUCTURE		**$0**	**$0**	**$0**
	SITE WORK (ROUGH)		**$1,218,642**	**$74,497**	**$75,515**
7	Horizontal Survey & Staking		**$19,418**	$0	$3,884
8	Earthwork, Paving, & Utilities		**$1,199,224**	$74,497	$71,631
	SITE WORK (FINISH)		**$672,269**	**$35,605**	**$36,700**
16	Landscaping & Irrigation		**$121,208**	$0	$26,554
18	Flag Pole		**$6,600**	$0	$0
23	Gates		**$12,330**	$0	$0
24	Site Concrete		**$434,311**	$35,605	$10,146
25	Site Masonry		**$97,820**	$0	$0
	STRUCTURE		**$1,598,359**	**$0**	**$0**
27	Structural Layout & Coordination		**$11,538**	$0	$0
30	Structural Concrete		**$685,133**	$0	$0
33	PEMB Structure		**$462,471**	$0	$0
36	Rough Carpentry		**$439,217**	$0	$0
	ENCLOSURE		**$1,687,162**	**$0**	**$0**
38	Moisture Protection		**$161,730**	$0	$0
40	Caulking & Sealants		**$50,258**	$0	$0
44	Thermal Insulation		**$53,432**	$0	$0
46	PEMB Enclosure		**$693,706**	$0	$0
48	Stucco / EIFS		**$195,711**	$0	$0
52	Exterior Aluminum, Glass, & Glazing		**$76,150**	$0	$0
54	Special Doors		**$456,175**	$0	$0
	INTERIOR FINISHES		**$759,215**	**$0**	**$0**
55	Temporary Requirements for Phasing / Quality Control		**$34,614**	$0	$0
56	Doors, Frames, & Hardware		**$119,364**	$0	$0
59	Casework & Finished Carpentry		**$73,723**	$0	$0
60	Drywall		**$291,747**	$0	$0
61	Paint & High-Performance Coatings		**$91,911**	$0	$0
62	Acoustical Ceiling Treament		**$42,183**	$0	$0
65	Carpet & Resilient Flooring		**$15,865**	$0	$0
66	Fluid-Applied Flooring		**$34,950**	$0	$0
67	Concrete Finishing		**$44,358**	$0	$0
70	Progressive & Final Clean Requirements		**$10,500**	$0	$0
	SPECIALTIES		**$94,412**	**$0**	**$0**
72	Building Signage		**$30,800**	$0	$0
74	Building Specialties		**$63,612**	$0	$0
	EQUIPMENT		**$222,366**	**$0**	**$0**
86	Residential Equipment & Appliances		**$67,490**	$0	$0
89	Fire Station Equipment		**$154,876**	$0	$0
	MEP SYSTEMS		**$1,855,142**	**$0**	**$0**
97	Fire Suppression System		**$68,182**	$0	$0
98	Plumbing Systems		**$652,830**	$0	$0
100	HVAC & Controls Systems		**$382,691**	$0	$0
103	Electrical Systems		**$751,440**	$0	$0
	UNIQUE FEATURES OF WORK		**$0**	**$0**	**$0**
	Subtotal		**$8,509,603**	**$110,102**	**$118,810**
	CONTINGENCIES & ALLOWANCES		**SUB TOTAL**		
2.5%	Design-Builder Contingency		$299,933	$2,753	$2,970
LS	Allowance #1: Utility Relocation (Fiber & Gas)		$75,000	$0	$0
	Subtotal		**$8,884,536**	**$112,855**	**$121,780**
RATE	**GENERAL CONDITIONS**		**SUB TOTAL**		
LS	General Conditions		$1,179,480		
LS	Warranty		$41,330		
	Subtotal		**$10,105,346**		
RATE	**INSURANCE, BONDS, AND BUILDERS RISK**		**SUB TOTAL**		
1.00%	General Liability		$119,974		
1.50%	Subcontractor Default Insurance		$137,768		
0.83%	Payment and Performance Bond		$100,165		
LS	Builders Risk Insurance		$74,384		
	Subtotal		**$10,537,637**	**$122,542**	**$132,234**
RATE	**CONTRACTOR'S FEE**		**SUB TOTAL**	**SUB TOTAL**	**SUB TOTAL**
4.50%	Design-Builder Fee		$516,631	**$5,514**	**$5,951**
	Subtotal		**$11,054,268**	**$128,057**	**$138,185**

	Working Project Cost	Access Road	ALT #1 Cross Street Visitor Parking
GMP Without Soft Costs	**$11,054,268**	**$128,057**	**$138,185**

	Project Soft Costs		Total Value
	Phase 2 A/E Design & Preconstruction Fees		$462,765
	Permits and Fees		$79,288
	FF&E Allowance (Other than Fire Station Equipment)		$101,053
2.5%	Owner Contingency		$299,933

	GMP	Access Road	ALT #1 Cross Street Visitor Parking
Guaranteed Maximum Price	**$11,997,307**	**$128,057**	**$138,185**

EXHIBIT 2A-03
CORE Construciton
Design Contract

AIA® Document A141™ – 2014

Standard Form of Agreement Between Owner and Design-Builder

AGREEMENT made as of the 1st day of April in the year 2022
(In words, indicate day, month and year.)

BETWEEN the Owner:
(Name, legal status, address and other information)

City of West Wendover
1111 N. Gene L. Jones Way
West Wendover, NV 89883
Phone: 775- 664-3081

and the Design-Builder:
(Name, legal status, address and other information)

CORE West, Inc. a Nevada corporation
7150 Cascade Valley Court
Las Vegas, NV 89128
Phone:702-794-0550

for the following Project:
(Name, location and detailed description)

West Wendover Fire Station
N. Gene L. Jones Way
West Wendover, NV 89883

The Owner and Design-Builder agree as follows.

ADDITIONS AND DELETIONS:
The author of this document has added information needed for its completion. The author may also have revised the text of the original AIA standard form. An *Additions and Deletions Report* that notes added information as well as revisions to the standard form text is available from the author and should be reviewed. A vertical line in the left margin of this document indicates where the author has added necessary information and where the author has added to or deleted from the original AIA text.

This document has important legal consequences. Consultation with an attorney is encouraged with respect to its completion or modification.

Consultation with an attorney is also encouraged with respect to professional licensing requirements in the jurisdiction where the Project is located.

Init.
/

AIA Document A141™ – 2014. Copyright © 2004 and 2014 by The American Institute of Architects. All rights reserved. The "American Institute of Architects," "AIA," the AIA Logo, and "AIA Contract Documents" are registered trademarks and may not be used without permission. This document was produced by AIA software at 17:24:06 ET on 04/01/2022 under Order No.2114285436 which expires on 02/22/2023, is not for resale, is licensed for one-time use only, and may only be used in accordance with the AIA Contract Documents® Terms of Service. To report copyright violations, e-mail copyright@aia.org.
User Notes: (913200243)

TABLE OF ARTICLES

1 GENERAL PROVISIONS

2 COMPENSATION AND PROGRESS PAYMENTS

3 GENERAL REQUIREMENTS OF THE WORK OF THE DESIGN-BUILD CONTRACT

4 WORK PRIOR TO EXECUTION OF THE DESIGN-BUILD AMENDMENT

5 WORK FOLLOWING EXECUTION OF THE DESIGN-BUILD AMENDMENT

6 CHANGES IN THE WORK

7 OWNER'S RESPONSIBILITIES

8 TIME

9 PAYMENT APPLICATIONS AND PROJECT COMPLETION

10 PROTECTION OF PERSONS AND PROPERTY

11 UNCOVERING AND CORRECTION OF WORK

12 COPYRIGHTS AND LICENSES

13 TERMINATION OR SUSPENSION

14 CLAIMS AND DISPUTE RESOLUTION

15 MISCELLANEOUS PROVISIONS

16 SCOPE OF THE AGREEMENT

TABLE OF EXHIBITS

A.1 PRELIMINARY DESIGN AMENDMENT PHASE 1B

A DESIGN-BUILD AMENDMENT

B INSURANCE AND BONDS

C DESIGN-BUILDER'S KEY TEAM MEMBERS HOURLY RATES

D OWNERS DESIGN REQUIRMENTS

ARTICLE 1 GENERAL PROVISIONS

§ 1.1 Owner's Criteria

This Agreement is based on the Owner's Criteria and is concurred with by the Agency set forth in this Section 1.1.

§ 1.1.1 The Owner's program for the Project:
(Set forth the program in which the program will be developed.)

Design-Build Team will utilize phasing of Preliminary Design to develop design documents and preparing the construction deliverable.

AIA Document A141™ – 2014. Copyright © 2004 and 2014 by The American Institute of Architects. All rights reserved. The "American Institute of Architects," "AIA," the AIA Logo, and "AIA Contract Documents" are registered trademarks and may not be used without permission. This document was produced by AIA software at 17:24:06 ET on 04/01/2022 under Order No.2114285436 which expires on 02/22/2023, is not for resale, is licensed for one-time use only, and may only be used in accordance with the AIA Contract Documents® Terms of Service. To report copyright violations, e-mail copyright@aia.org.
User Notes: (913200243)

§ 1.1.2 The Owner's design requirements for the Project and related documentation:
(Identified below, as an attached Exhibit, the documentation that contains the Owner's design requirements.)

Exhibit D – Owners Design requirements dated March 21st 2022, 05 pages.

§ 1.1.3 The Project's physical characteristics:
(Paragraph deleted)
Fire Station facility will include but not be limited to standard length bays, safety equipment associated with fire apparatus bays, training room(s), offices, storage for equipment and supplies, housing quarters, associated utilities, custodial and uniform/turnout/equipment washing and decontamination areas, paved access and parking, landscaping.

§ 1.1.4 The Owner's anticipated Sustainable Objective for the Project, if any:
(Paragraph deleted)
LEED v4 Silver Equivalent for BD+C: New Construction:

Owner and Design-Builder shall maximize opportunities for integrated, cost-effective adoption of green design and construction strategies, emphasizing, Sustainable Sites, Water Efficiency, Energy and Atmosphere, Materials and Resources, Indoor Environmental Quality as a fundamental evaluative criterion for design, construction, and operational strategies.

(USGBC) US Green Building Council LEED registration and official project certification are not included in the Sustainability Objective of this Agreement as cost saving measures. Design-Builder shall not be held responsible for providing reporting, tracking or management of LEED documentation that would be required for certification.

§ 1.1.5 The Owner's budget for the Work to be provided by the Design-Builder is set forth below:

Six Million Five Hundred Thousand Dollars and No/100's ($6,500,000.00)

(Paragraphs deleted)
§ 1.1.7 The Owner's design and construction milestone dates:

.1 Design phase milestone dates:

Anticipated duration of Phase 1A Services shall be: One Hundred Sixty-Eight (168) Days

.2 Submission of Design-Builder Proposal:

Anticipated duration of Phase 1B Services shall be included in the Article A.2 of the Preliminary Design Amendment

.3 Phased completion dates:

Additional Phased services are not anticipated at this time but may be added by Modification of this Agreement by executed Amendment.

.4 Substantial Completion date:

Anticipated duration of Construction Services shall be included in the Article A.2 of the Design-Build Amendment

If the Work is not substantially complete on or before this date, or within this period of time, or extension thereof granted by the Owner, the Design-Builder shall pay to the Owner liquidated damages in the sum of $500.00 for each calendar day of delay. Any sums that may be due the Owner as liquidated damages may be deducted from any monies due or to become due the Design-Builder under the Contract or may be collected from the Design-Builder's surety.

AIA Document A141™ – 2014. Copyright © 2004 and 2014 by The American Institute of Architects. All rights reserved. The "American Institute of Architects," "AIA," the AIA Logo, and "AIA Contract Documents" are registered trademarks and may not be used without permission. This document was produced by AIA software at 17:24:06 ET on 04/01/2022 under Order No.2114285436 which expires on 02/22/2023, is not for resale, is licensed for one-time use only, and may only be used in accordance with the AIA Contract Documents® Terms of Service. To report copyright violations, e-mail copyright@aia.org.
User Notes: (913200243)

§ 1.1.8 The Owner requires the Design-Builder to retain the following Architect, at the Design-Builder's cost:
(List name, legal status, address and other information.)

.1 Architect

TSK Architects
225 S Arlington Ave., Suite A
Reno, NV 89501
(Paragraphs deleted)
P: 775-857-2949

§ 1.1.9 Additional Owner's Criteria upon which the Agreement is based:

None.

§ 1.1.10 The Design-Builder shall confirm that the information included in the Owner's Criteria complies with applicable laws, statutes, ordinances, codes, rules and regulations, or lawful orders of public authorities.

§ 1.1.10.1 If the Owner's Criteria conflicts with applicable laws, statutes, ordinances, codes, rules and regulations, or lawful orders of public authorities, the Design-Builder shall notify the Owner of the conflict.

§ 1.1.11 If there is a change in the Owner's Criteria, the Owner and the Design-Builder shall execute a Modification in accordance with Article 6.

§ 1.1.12 The Owner and Design-Builder intend to transmit Instruments of Service or any other information or documentation in digital form, they shall endeavor to establish necessary protocols governing such transmissions.

§ 1.2 Project Team

§ 1.2.1 The Owner identifies the following representative in accordance with Section 7.1.1:
(List name, address and other information.)

Chris Melville City Manager
City of West Wendover
1111 N. Gene L. Jones Way
West Wendover, NV 89883
Phone: 775- 664-3081

§ 1.2.2 The persons or entities, in addition to the Owner's representative, who are required to review the Design-Builder's Submittals are as follows:
(List name, address and other information.)

Darin Hawkes, P.E., City Engineer
Aqua Engineering, Inc.
533 W. 2600 S. Suite 275
Bountiful, UT 84010
Phone: 801-299-1327

§ 1.2.3 The Owner will retain the following consultants and separate contractors:

None.

§ 1.2.4 The Design-Builder identifies the following representative in accordance with Section 3.1.2:
(List name, address and other information.)

AIA Document A141™ – 2014. Copyright © 2004 and 2014 by The American Institute of Architects. All rights reserved. The "American Institute of Architects," "AIA," the AIA Logo, and "AIA Contract Documents" are registered trademarks and may not be used without permission. This document was produced by AIA software at 17:24:06 ET on 04/01/2022 under Order No.2114285436 which expires on 02/22/2023, is not for resale, is licensed for one-time use only, and may only be used in accordance with the AIA Contract Documents® Terms of Service. To report copyright violations, e-mail copyright@aia.org.
User Notes: (913200243)

Seth Maurer, President or Delegated Representative
CORE West, Inc.
7150 Cascade Valley Court
Las Vegas, NV 89128
Phone: 702-794-0550
(Paragraph deleted)

§ 1.3 Binding Dispute Resolution

For any Claim subject to, but not resolved by, mediation pursuant to Section 14.3, the method of binding dispute resolution shall be the following:
(Paragraph deleted)

[X] Arbitration pursuant to Section 14.4

(Paragraphs deleted)

§ 1.4 Definitions

§ 1.4.1 Design-Build Documents. The Design-Build Documents consist of this Agreement between Owner and Design-Builder and its attached Exhibits (hereinafter, the "Agreement"); other documents listed in this Agreement; and Modifications issued after execution of this Agreement. A Modification is (1) a written amendment to the Contract signed by both parties, including the Design-Build Amendment, (2) a Change Order, or (3) a Change Directive.

§ 1.4.1.1 Order of Precedence. In case of any inconsistency, conflict, or ambiguity among the Design-Build Documents, the documents shall govern in the following order: (a) Change Orders and written amendments to this Agreement; (b) the Agreement; (c) the drawings, specifications, and addenda issued prior to the execution of this Agreement; (d) information furnished by the Owner pursuant to Article 7 of the Agreement (e) other documents listed in this Agreement. Among all the Design-Build Documents, the term or provision that is most specific or includes the latest date shall control. If any provision of this Agreement conflicts with or is inconsistent with any other provision of other Design-Build Documents, the provision of this Agreement governs, unless the other provision specifically refers to the provision it supersedes and replaces in this Agreement.

§ 1.4.2 The Contract. The Design-Build Documents form the Contract. The Contract represents the entire and integrated agreement between the parties and supersedes prior negotiations, representations or agreements, either written or oral. The Contract may be amended or modified only by a Modification. The Design-Build Documents shall not be construed to create a contractual relationship of any kind between any persons or entities other than the Owner and the Design-Builder.

§ 1.4.3 The Work. The term "Work" means the design, construction and related services required to fulfill the Design-Builder's obligations under the Design-Build Documents, whether completed or partially completed, and includes all labor, materials, equipment and services provided or to be provided by the Design-Builder. The Work may constitute the whole or a part of the Project.

§ 1.4.4 The Project. The Project is the total design and construction of which the Work performed under the Design-Build Documents may be the whole or a part, and may include design and construction by the Owner and by separate contractors.

§ 1.4.5 Instruments of Service. Instruments of Service are representations, in any medium of expression now known or later developed, of the tangible and intangible creative work performed by the Design-Builder, Contractor(s), Architect, and Consultant(s) under their respective agreements. Instruments of Service may include, without limitation, studies, surveys, models, sketches, drawings, specifications, digital models and other similar materials.

§ 1.4.6 Submittal. A Submittal is any submission to the Owner for review and approval demonstrating how the Design-Builder proposes to conform to the Design-Build Documents for those portions of the Work for which the Design-Build Documents require Submittals. Submittals include, but are not limited to, shop drawings, product data, and samples. Submittals are not Design-Build Documents unless incorporated into a Modification.

§ 1.4.7 Owner. The Owner is the person or entity identified as such in the Agreement and is referred to throughout the Design-Build Documents as if singular in number. The term "Owner" means the Owner or the Owner's authorized representative.

AIA Document A141™ – 2014. Copyright © 2004 and 2014 by The American Institute of Architects. All rights reserved. The "American Institute of Architects," "AIA," the AIA Logo, and "AIA Contract Documents" are registered trademarks and may not be used without permission. This document was produced by AIA software at 17:24:06 ET on 04/01/2022 under Order No.2114285436 which expires on 02/22/2023, is not for resale, is licensed for one-time use only, and may only be used in accordance with the AIA Contract Documents® Terms of Service. To report copyright violations, e-mail copyright@aia.org.
User Notes: (913200243)

§ 1.4.8 Design-Builder. The Design-Builder is the person or entity identified as such in the Agreement and is referred to throughout the Design-Build Documents as if singular in number. The term "Design-Builder" means the Design-Builder or the Design-Builder's authorized representative.

§ 1.4.9 Consultant. A Consultant is a person or entity providing professional services for the Design-Builder for all or a portion of the Work, and is referred to throughout the Design-Build Documents as if singular in number. To the extent required by the relevant jurisdiction, the Consultant shall be lawfully licensed to provide the required professional services.

§ 1.4.10 Architect. The Architect is a person or entity providing design services for the Design-Builder for all or a portion of the Work, and is lawfully licensed to practice architecture in the applicable jurisdiction. The Architect is referred to throughout the Design-Build Documents as if singular in number.

§ 1.4.11 Subcontractor. A Subcontractor is a person or entity performing all or a portion of the construction, required in connection with the Work, for the Design-Builder. The Subcontractor shall be lawfully licensed, if required in the jurisdiction where the Project is located. The Subcontractor is referred to throughout the Design-Build Documents as if singular in number and means a Subcontractor or an authorized representative of the Subcontractor.

§ 1.4.12 Confidential Information. Confidential Information is information containing confidential or business proprietary information that is clearly marked as "confidential."

§ 1.4.13 Contract Time. Unless otherwise provided, Contract Time is the period of time, including authorized adjustments, as set forth in the Design-Build Amendment for Substantial Completion of the Work.

§ 1.4.14 Day. The term "day" as used in the Design-Build Documents shall mean calendar day unless otherwise specifically defined.

§ 1.4.15 Contract Sum. The Contract Sum is the amount to be paid to the Design-Builder for performance of the Work after execution of the Design-Build Amendment, as identified in Article A.1 of the Design-Build Amendment.

§ 1.4.16 Agency. The term "Agency", as used in this Attachment, shall mean the United States of America, acting through United States Department of Agriculture.

§ 1.4.17 Independent Inspector. The term "Independent Inspector," as used in this Attachment, shall mean the Inspector independent from the Design-Builder hired by the Owner to represent the Owner's interests. The Agency requires a construction inspector independent of the Design-Builder.

§ 1.4.17.1 The Independent Inspector shall be a representative of and shall advise and consult with the Owner during construction until final payment is due to the Design-Builder, and at the Owner's direction during the period of correction of the Work described in the design/build documents. The Independent Inspector shall furnish consultations necessary to identify construction defects and correct unforeseen conditions encountered during this period. The Independent Inspector shall assist the Owner in performing a review of the Project during the 11th month after the date of Substantial Completion.

§ 1.4.17.2 The Independent Inspector shall conduct an inspection prior to the issuance of the Acknowledgement of Substantial Completion and shall submit a written report to the Owner, Agency and the Design-Builder about Work to be completed prior to final acceptance. Such services shall be coordinated with the Agency. Prior to submitting the final Application for Payment, the Independent Inspector shall conduct an inspection, submit a Statement of Completion, and receive and forward to the Owner, for the Owner's review and records, written warranties and related documents required by the Contract Documents and assembled by the Design-Builder.

§ 1.4.17.3 Visits to the site shall be documented in writing on standard inspection report forms with copies furnished to the Owner, Design-Builder and Agency. Visits to the site shall be in accordance with Agency requirements and procedures.

AIA Document A141™ – 2014. Copyright © 2004 and 2014 by The American Institute of Architects. All rights reserved. The "American Institute of Architects," "AIA," the AIA Logo, and "AIA Contract Documents" are registered trademarks and may not be used without permission. This document was produced by AIA software at 17:24:06 ET on 04/01/2022 under Order No.2114285436 which expires on 02/22/2023, is not for resale, is licensed for one-time use only, and may only be used in accordance with the AIA Contract Documents® Terms of Service. To report copyright violations, e-mail copyright@aia.org.
User Notes: (913200243)

ARTICLE 2 COMPENSATION AND PROGRESS PAYMENTS

§ 2.1 Compensation for Work Performed Prior To Execution of Design-Build Amendment

§ 2.1.1 Unless otherwise agreed, payments for Work performed prior to Execution of the Design-Build Amendment shall be made monthly. For the Design-Builder's performance of Work prior to the execution of the Design-Build Amendment, the Owner shall compensate the Design-Builder as follows:

For completion of the Phase 1A Services to be performed prior to the execution of the Design Build Amendment, Owner shall pay Design-Builder a Stipulated Sum not to exceed Two Hundred Ninety-Two Thousand Five Hundred Dollars ($292,500.00) billed once monthly on the last day of the month, for the percent completed of Phase 1A.

§ 2.1.2 The hourly billing rates for services of the Design-Builder and the Design-Builder's Architect, Consultants, subconsultants , are set forth below.

Exhibit C Hourly Rates for Key Team Members
(Table deleted)

§ 2.1.3 Compensation for Reimbursable Expenses Prior To Execution of Design-Build Amendment

§ 2.1.3.1 Reimbursable Expenses are in addition to compensation set forth in Section 2.1.1 and 2.1.2 and include expenses, directly related to the Project, incurred by the Design-Builder and the Design-Builder's Architect, Consultants, and Subcontractors, as follows:

.1 Transportation and authorized out-of-town travel and subsistence;
.2 Dedicated data and communication services, teleconferences, Project web sites, and extranets;
.3 Fees paid for securing approval of authorities having jurisdiction over the Project;
.4 Printing, reproductions, plots, standard form documents;
.5 Postage, handling and delivery;
.6 Expense of overtime work requiring higher than regular rates, if authorized in advance by the Owner;
.7 Renderings, physical models, mock-ups, professional photography, and presentation materials requested by the Owner;
.8 All taxes levied on professional services and on reimbursable expenses; and
.9 Other Project-related expenditures, if authorized in advance by the Owner.

§ 2.1.3.2 For Reimbursable Expenses, the compensation shall be the expenses the Design-Builder and the Design-Builder's Architect, Consultants and Subcontractors incurred, plus an administrative fee of Four and One Half percent (4.5 %) of the expenses incurred.

§ 2.1.4 Payments to the Design-Builder Prior To Execution of Design-Build Amendment

§ 2.1.4.1 Payments are due and payable upon presentation of the Design-Builder's invoice. Amounts unpaid Sixty (60) days after the invoice date shall bear interest at the rate entered below, or in the absence thereof at the legal rate prevailing from time to time at the principal place of business of the Design-Builder.

One Percent (1%) per month or Twelve Percent (12%) per year

§ 2.1.4.2 Records of Reimbursable Expenses and services performed on the basis of hourly rates shall be available to the Owner at mutually convenient times for a period of two years following execution of the Design-Build Amendment or termination of this Agreement, whichever occurs first.

§ 2.2 Contract Sum and Payment for Work Performed After Execution of Design-Build Amendment

For the Design-Builder's performance of the Work after execution of the Design-Build Amendment, the Owner shall pay to the Design-Builder the Contract Sum in current funds as agreed in the Design-Build Amendment.

ARTICLE 3 GENERAL REQUIREMENTS OF THE WORK OF THE DESIGN-BUILD CONTRACT

§ 3.1 General

§ 3.1.1 The Design-Builder shall comply with any applicable licensing requirements in the jurisdiction where the Project is located.

§ 3.1.2 The Design-Builder shall designate in writing a representative who is authorized to act on the Design-Builder's behalf with respect to the Project.

AIA Document A141™ – 2014. Copyright © 2004 and 2014 by The American Institute of Architects. All rights reserved. The "American Institute of Architects," "AIA," the AIA Logo, and "AIA Contract Documents" are registered trademarks and may not be used without permission. This document was produced by AIA software at 17:24:06 ET on 04/01/2022 under Order No.2114285436 which expires on 02/22/2023, is not for resale, is licensed for one-time use only, and may only be used in accordance with the AIA Contract Documents® Terms of Service. To report copyright violations, e-mail copyright@aia.org.
User Notes: (913200243)

§ 3.1.3 The Design-Builder shall perform the Work in accordance with the Design-Build Documents. The Design-Builder shall not be relieved of the obligation to perform the Work in accordance with the Design-Build Documents by the activities, tests, inspections or approvals of the Owner.

§ 3.1.3.1 The Design-Builder shall perform the Work in compliance with applicable laws, statutes, ordinances, codes, rules and regulations, or lawful orders of public authorities. If the Design-Builder knowingly performs Work contrary to applicable laws, statutes, ordinances, codes, rules and regulations, and lawful orders of public authorities, the Design-Builder shall assume responsibility for such Work and shall bear the costs attributable to correction.

§ 3.1.3.2 Neither the Design-Builder nor any Subcontractor, Consultant, or Architect shall be obligated to perform any act which they believe will violate any applicable laws, statutes, ordinances, codes, rules and regulations, or lawful orders of public authorities. If the Design-Builder determines that implementation of any instruction received from the Owner, including those in the Owner's Criteria, would cause a violation of any applicable laws, statutes, ordinances, codes, rules and regulations, or lawful orders of public authorities, the Design-Builder shall notify the Owner in writing. Upon verification by the Owner that a change to the Owner's Criteria is required to remedy the violation, the Owner and the Design-Builder shall execute a Modification in accordance with Article 6.

§ 3.1.3.3 The Design-Builder shall advise the Owner of required tests, inspections and reports, shall furnish coordination of such tests and inspections, and shall advise the Owner and Agency of the results of same. Copies of test results shall be furnished to the Owner, Owner's Independent Inspector and Agency, as appropriate.

§ 3.1.4 The Design-Builder shall be responsible to the Owner for acts and omissions of the Design-Builder's employees, Architect, Consultants, Subcontractors, and their agents and employees, and other persons or entities performing portions of the Work. Any extra cost that may result from any such acts and omissions will be the responsibility of the Design-Builder.

§ 3.1.5 General Consultation. The Design-Builder shall schedule and conduct periodic meetings with the Owner to review matters such as procedures, progress, coordination, and scheduling of the Work. The Design-Builder shall conduct a Preconstruction Conference prior to the beginning of construction to familiarize all parties involved with the necessary work. This meeting shall be held with the Design-Build representative, Owner, Owner's Independent Inspector, Agency representative(s) and other interested parties as appropriate. The Agency 'Record of Preconstruction Conference' may be used to document the meeting.

§ 3.1.6 When applicable law requires that services be performed by licensed professionals, the Design-Builder shall provide those services through qualified, licensed professionals. The Owner understands and agrees that the services of the Design-Builder's Architect and the Design-Builder's other Consultants are performed in the sole interest of, and for the exclusive benefit of, the Design-Builder.

§ 3.1.7 The Design-Builder, with the assistance of the Owner, shall prepare and file documents required to obtain necessary approvals of governmental authorities having jurisdiction over the Project.

§ 3.1.7.1 The Design-Builder shall consult with the Agency Architect or Engineer about the Agency's requirements and procedures.

§ 3.1.8 Progress Reports

§ 3.1.8.1 The Design-Builder shall keep the Owner informed of the progress and quality of the Work. On a monthly basis, or otherwise as agreed to by the Owner and Design-Builder, the Design-Builder shall submit written progress reports to the Owner, showing estimated percentages of completion and other information identified below:

.1 Work completed for the period;
.2 Project schedule status;
.3 Submittal schedule and status report, including a summary of outstanding Submittals;
.4 Responses to requests for information to be provided by the Owner;
.5 Approved Change Orders and Change Directives;
.6 Pending Change Order and Change Directive status reports;

AIA Document A141™ – 2014. Copyright © 2004 and 2014 by The American Institute of Architects. All rights reserved. The "American Institute of Architects," "AIA," the AIA Logo, and "AIA Contract Documents" are registered trademarks and may not be used without permission. This document was produced by AIA software at 17:24:06 ET on 04/01/2022 under Order No.2114285436 which expires on 02/22/2023, is not for resale, is licensed for one-time use only, and may only be used in accordance with the AIA Contract Documents® Terms of Service. To report copyright violations, e-mail copyright@aia.org.
User Notes: (913200243)

.7 Tests and inspection reports;
.8 Status report of Work rejected by the Owner;
.9 Status of Claims previously submitted in accordance with Article 14;
.10 Cumulative total of the Cost of the Work to date including the Design-Builder's compensation and Reimbursable Expenses, if any;
.11 Current Project cash-flow and forecast reports; and
.12 Additional information as agreed to by the Owner and Design-Builder.
.13 The Design-Builder shall conduct on-site pay/progress meetings no less than once a month during the periods of active construction. These meetings shall be held with the Design-Build representative, Owner, Owner's Independent Inspector, Agency representative(s) and other interested parties as appropriate, to review and discuss the application for payment, work progress schedule, construction problems or disputes and other appropriate matters.

§ 3.1.8.2 In addition, where the Contract Sum is the Cost of the Work with or without a Guaranteed Maximum Price, the Design-Builder shall include the following additional information in its progress reports:

.1 Design-Builder's work force report;
.2 Equipment utilization report; and
.3 Cost summary, comparing actual costs to updated cost estimates.

§ 3.1.9 Design-Builder's Schedules

§ 3.1.9.1 The Design-Builder, promptly after execution of this Agreement, shall prepare and submit for the Owner's information a schedule for the Work. The schedule, including the time required for design and construction, shall not exceed time limits current under the Design-Build Documents, shall be revised at appropriate intervals as required by the conditions of the Work and Project, shall be related to the entire Project to the extent required by the Design-Build Documents, shall provide for expeditious and practicable execution of the Work, and shall include allowances for periods of time required for the Owner's review and for approval of submissions by authorities having jurisdiction over the Project.

§ 3.1.9.2 The Design-Builder shall perform the Work in general accordance with the most recent schedules submitted to the Owner.

§ 3.1.10 Certifications. Upon the Owner's written request, the Design-Builder shall obtain from the Architect, Consultants, and Subcontractors, and furnish to the Owner, certifications with respect to the documents and services provided by the Architect, Consultants, and Subcontractors (a) that, to the best of their knowledge, information and belief, the documents or services to which the certifications relate (i) are consistent with the Design-Build Documents, except to the extent specifically identified in the certificate, and (ii) comply with applicable laws, statutes, ordinances, codes, rules and regulations, or lawful orders of public authorities governing the design of the Project; and (b) that the Owner and its consultants shall be entitled to rely upon the accuracy of the representations and statements contained in the certifications. The Design-Builder's Architect, Consultants, and Subcontractors shall not be required to execute certificates or consents that would require knowledge, services or responsibilities beyond the scope of their services.

§ 3.1.11 Design-Builder's Submittals

§ 3.1.11.1 Prior to submission of any Submittals, the Design-Builder shall prepare a Submittal schedule, and shall submit the schedule for the Owner's approval. The Owner's approval shall not unreasonably be delayed or withheld. The Submittal schedule shall (1) be coordinated with the Design-Builder's schedule provided in Section 3.1.9.1, (2) allow the Owner reasonable time to review Submittals, and (3) be periodically updated to reflect the progress of the Work. If the Design-Builder fails to submit a Submittal schedule, the Design-Builder shall not be entitled to any increase in Contract Sum or extension of Contract Time based on the time required for review of Submittals.

§ 3.1.11.2 By providing Submittals the Design-Builder represents to the Owner that it has (1) reviewed them, (2) determined and verified materials, field measurements and field construction criteria related thereto, or will do so and (3) checked and coordinated the information contained within such Submittals with the requirements of the Work and of the Design-Build Documents.

§ 3.1.11.3 The Design-Builder shall perform no portion of the Work for which the Design-Build Documents require Submittals until the Owner has reviewed the respective Submittal and written concurrence by the Agency has been issued. Two (2) sets of submittals for the Agency are required.

AIA Document A141™ – 2014. Copyright © 2004 and 2014 by The American Institute of Architects. All rights reserved. The "American Institute of Architects," "AIA," the AIA Logo, and "AIA Contract Documents" are registered trademarks and may not be used without permission. This document was produced by AIA software at 17:24:06 ET on 04/01/2022 under Order No.2114285436 which expires on 02/22/2023, is not for resale, is licensed for one-time use only, and may only be used in accordance with the AIA Contract Documents® Terms of Service. To report copyright violations, e-mail copyright@aia.org.
User Notes: (913200243)

§ 3.1.11.4 The Work shall be in accordance with reviewed Submittals except that the Design-Builder shall not be relieved of its responsibility to perform the Work consistent with the requirements of the Design-Build Documents. The Work may deviate from the Design-Build Documents only if the Design-Builder has notified the Owner in writing of a deviation from the Design-Build Documents at the time of the Submittal and a Modification is executed authorizing the identified deviation. The Design-Builder shall not be relieved of responsibility for errors or omissions in Submittals by the Owner's review of the Submittals.

§ 3.1.11.5 All professional design services or certifications to be provided by the Design-Builder, including all drawings, calculations, specifications, certifications, shop drawings and other Submittals, shall contain the signature and seal of the licensed design professional preparing them. Submittals related to the Work designed or certified by the licensed design professionals, if prepared by others, shall bear the licensed design professional's written approval. The Owner and its consultants shall be entitled to rely upon the adequacy, accuracy and completeness of the services, certifications or approvals performed by such design professionals.

§ 3.1.12 Warranty. The Design-Builder warrants to the Owner that materials and equipment furnished under the Contract will be of good quality and new unless the Design-Build Documents require or permit otherwise. The Design-Builder further warrants that the Work will conform to the requirements of the Design-Build Documents and will be free from defects, except for those inherent in the quality of the Work or otherwise expressly permitted by the Design-Build Documents. Work, materials, or equipment not conforming to these requirements may be considered defective. The Design-Builder's warranty excludes remedy for damage or defect caused by abuse, alterations to the Work not executed by the Design-Builder, improper or insufficient maintenance, improper operation, or normal wear and tear and normal usage. If required by the Owner, the Design-Builder shall furnish satisfactory evidence as to the kind and quality of materials and equipment.

§ 3.1.13 Royalties, Patents and Copyrights

§ 3.1.13.1 The Design-Builder shall pay all royalties and license fees.

§ 3.1.13.2 The Design-Builder shall defend suits or claims for infringement of copyrights and patent rights and shall hold the Owner and its separate contractors and consultants harmless from loss on account thereof, but shall not be responsible for such defense or loss when a particular design, process or product of a particular manufacturer or manufacturers is required by the Owner, or where the copyright violations are required in the Owner's Criteria. However, if the Design-Builder has reason to believe that the design, process or product required in the Owner's Criteria is an infringement of a copyright or a patent, the Design-Builder shall be responsible for such loss unless such information is promptly furnished to the Owner. If the Owner receives notice from a patent or copyright owner of an alleged violation of a patent or copyright, attributable to the Design-Builder, the Owner shall give prompt written notice to the Design-Builder.

§ 3.1.14 Indemnification

§ 3.1.14.1 To the fullest extent permitted by law, the Design-Builder shall indemnify and hold harmless the Owner, including the Owner's agents and employees, from and against claims, damages, losses and expenses, including but not limited to attorneys' fees, arising out of or resulting from performance of the Work, but only to the extent caused by the negligent acts or omissions of the Design-Builder, Architect, a Consultant, a Subcontractor, or anyone directly or indirectly employed by them or anyone for whose acts they may be liable. Such obligation shall not be construed to negate, abridge, or reduce other rights or obligations of indemnity that would otherwise exist as to a party or person described in this Section 3.1.14. Notwithstanding anything to the contrary in this Section, Design-Builder's obligations hereunder do not extend to any claims, damages, losses and expenses arising out of or resulting from the negligence of an Indemnitee.

§ 3.1.14.2 The indemnification obligation under this Section 3.1.14 shall not be limited by a limitation on amount or type of damages, compensation, or benefits payable by or for Design-Builder, Architect, a Consultant, a Subcontractor, or anyone directly or indirectly employed by them, under workers' compensation acts, disability benefit acts or other employee benefit acts.

§ 3.1.15 Contingent Assignment of Agreements

§ 3.1.15.1 Each agreement for a portion of the Work is assigned by the Design-Builder to the Owner, provided that

.1 assignment is effective only after termination of the Contract by the Owner for cause, pursuant to Sections 13.1.4 or 13.2.2, and only for those agreements that the Owner accepts by written notification to the Design-Builder and the Architect, Consultants, and Subcontractors whose agreements are accepted for assignment; and

.2 assignment is subject to the prior rights of the surety, if any, obligated under bond relating to the Contract.

AIA Document A141™ – 2014. Copyright © 2004 and 2014 by The American Institute of Architects. All rights reserved. The "American Institute of Architects," "AIA," the AIA Logo, and "AIA Contract Documents" are registered trademarks and may not be used without permission. This document was produced by AIA software at 17:24:06 ET on 04/01/2022 under Order No.2114285436 which expires on 02/22/2023, is not for resale, is licensed for one-time use only, and may only be used in accordance with the AIA Contract Documents® Terms of Service. To report copyright violations, e-mail copyright@aia.org.
User Notes: (913200243)

When the Owner accepts the assignment of an agreement, the Owner assumes the Design-Builder's rights and obligations under the agreement.

§ 3.1.15.2 Upon such assignment, if the Work has been suspended for more than 30 days, the compensation under the assigned agreement shall be equitably adjusted for increases in cost resulting from the suspension.

§ 3.1.15.3 Upon such assignment to the Owner under this Section 3.1.15, the Owner may further assign the agreement to a successor design-builder or other entity. If the Owner assigns the agreement to a successor design-builder or other entity, the Owner shall nevertheless remain legally responsible for all of the successor design-builder's or other entity's obligations under the agreement.

§ 3.1.16 Design-Builder's Insurance and Bonds. The Design-Builder shall purchase and maintain insurance and provide bonds as set forth in Exhibit B.

ARTICLE 4 WORK PRIOR TO EXECUTION OF THE DESIGN-BUILD AMENDMENT PHASE 1

§ 4.1 General

§ 4.1.1 Any information submitted by the Design-Builder, and any interim decisions made by the Owner, shall be for the purpose of facilitating the design process and shall not modify the Owner's Criteria unless the Owner and Design-Builder execute a Modification.

§ 4.1.2 The Design-Builder shall advise the Owner on proposed site use and improvements, selection of materials, and building systems and equipment. The Design-Builder shall also provide the Owner with recommendations, consistent with the Owner's Criteria, on constructability; availability of materials and labor; time requirements for procurement, installation and construction; and factors related to construction cost including, but not limited to, costs of alternative designs or materials, preliminary budgets, life-cycle data, and possible cost reductions.

§ 4.2 Evaluation of the Owner's Criteria

§ 4.2.1 The Design-Builder shall schedule and conduct meetings with the Owner and any other necessary individuals or entities to discuss and review the Owner's Criteria as set forth in Section 1.1.The Design-Builder shall thereafter again meet with the Owner to discuss a preliminary evaluation of the Owner's Criteria. The preliminary evaluation shall address possible alternative approaches to design and construction of the Project and include the Design-Builder's recommendations, if any, with regard to accelerated or fast-track scheduling, procurement, or phased construction. The preliminary evaluation shall consider cost information, constructability, and procurement and construction scheduling issues.

§ 4.2.2 After the Design-Builder meets with the Owner and presents the preliminary evaluation, the Design-Builder shall provide a written report to the Owner, summarizing the Design-Builder's evaluation of the Owner's Criteria. The report shall also include

- **.1** allocations of program functions, detailing each function and their square foot areas;
- **.2** a preliminary estimate of the Cost of the Work, and, if necessary, recommendations to adjust the Owner's Criteria to conform to the Owner's budget;
- **.3** a preliminary schedule, which shall include proposed design milestones; dates for receiving additional information from, or for work to be completed by, the Owner; anticipated date for the Design-Builder's Proposal; and dates of periodic design review sessions with the Owner; and

(Paragraphs deleted)

§ 4.2.3 The Owner shall review the Design-Builder's written report and, if acceptable, provide the Design-Builder with written consent to proceed to the development of the Phase 1A Preliminary Design as described in Section 4.3. The consent to proceed shall not be understood to modify the Owner's Criteria unless the Owner and Design-Builder execute a Modification.

§ 4.2.4 Date of Phase 1A Preliminary Design Commencement. Unless the parties mutually agree otherwise in writing, the Work shall Commence within one (1) business day of Design-Builder's receipt of the later of the following:

- .1 Fully executed Agreement.
- .2 Design-Builder's receipt of Owners notice to Proceed with the work.

AIA Document A141™ – 2014. Copyright © 2004 and 2014 by The American Institute of Architects. All rights reserved. The "American Institute of Architects," "AIA," the AIA Logo, and "AIA Contract Documents" are registered trademarks and may not be used without permission. This document was produced by AIA software at 17:24:06 ET on 04/01/2022 under Order No.2114285436 which expires on 02/22/2023, is not for resale, is licensed for one-time use only, and may only be used in accordance with the AIA Contract Documents® Terms of Service. To report copyright violations, e-mail copyright@aia.org.
User Notes: (913200243)

§ 4.3 Preliminary Design PHASE 1A

§ 4.3.1 Upon the Owner's issuance of a written consent to proceed under Section 4.2.3, the Design-Builder shall prepare and submit a Phase 1A Preliminary Design to the Owner. The Phase 1A Preliminary Design shall include a report identifying any deviations from the Owner's Criteria, and shall include the following:

.1 Confirmation of the allocations of program functions;
.2 Site plan;
.3 Building plans, sections and elevations;
.4 Structural system;
.5 Selections of major building systems, including but not limited to mechanical, electrical and plumbing systems; and
.6 Outline specifications or sufficient drawing notes describing construction materials.
.7 Proposal for Phase 1B services "Proposal"; Final Basis of Design Documents, the Guaranteed Maximum Price, and development of the Project Schedule.

The Phase 1A Preliminary Design may include some combination of physical study models, perspective sketches, or digital modeling.

§ 4.3.2 Upon completion of Phase 1A Owner and Design-Builder shall review the Proposal for Phase 1B Preliminary Design. If Owner has any comments regarding the Proposal, or finds any inconsistencies or inaccuracies in the information presented, it shall promptly give written notice to Design-Builder of such comments or findings. If appropriate, Design-Builder shall, upon receipt of Owner's notice, make appropriate adjustments to the Proposal.

§ 4.3.2.1 If Owner accepts the Proposal, as may be amended by Design-Builder, the Contract Price and its basis shall be set forth in a Modification to this Agreement, when mutually agreed between the parties. Once the parties have agreed upon the Contract Price and Owner has issued a Notice to Proceed with Phase 1B, Design-Builder shall perform the Phase 1B Services, all as further described in the Modification to this Agreement, as it may be revised.

§ 4.3.2.2 If Owner rejects the Proposal or fails to notify Design-Builder in writing on or before the date specified in the Proposal that it accepts the Proposal, the Proposal shall be deemed withdrawn and of no effect. In such event, Owner and Design-Builder shall meet and confer as to how the Project will proceed, with Owner having the following options:

i. Owner may suggest modifications to the Proposal, whereupon, if such modifications are accepted in writing by Design-Builder, the Proposal shall be deemed accepted and the parties shall proceed in accordance with Section 4.3.2.1 above;

ii. Owner may authorize Design-Builder to continue to proceed with the Work on the basis of reimbursement as provided in Section 2.1.2 hereof without a Contract Price, in which case all references in this Agreement to the Contract Price shall not be applicable; or

iii. Owner may terminate this Agreement for convenience in accordance with Article 9 hereof; provided, however, in this event, Design-Builder shall not be entitled to the payment provided for in Section 9.2 hereof.

If Owner fails to exercise any of the above options, Design-Builder shall have the right to (a) continue with the Work as if Owner had elected to proceed in accordance with Item 4.3.2.2 ii. above, and be paid by Owner accordingly, unless and until Owner notifies it in writing to stop the Work, (b) suspend performance of Work in accordance with Section 13.1.2 of this Agreement, or (c) may give written notice to Owner that it considers this Agreement completed. If Owner fails to exercise any of the options under Section 4.3.2.2 within ten (10) days of receipt of Design-Builder's notice, then this Agreement shall be deemed completed. If Owner terminates the relationship with Design-Builder under Section 4.3.2.2(iii), or if this Agreement is deemed completed under this paragraph, then Design-Builder shall have no further liability or obligations to Owner under this Agreement.

AIA Document A141™ – 2014. Copyright © 2004 and 2014 by The American Institute of Architects. All rights reserved. The "American Institute of Architects," "AIA," the AIA Logo, and "AIA Contract Documents" are registered trademarks and may not be used without permission. This document was produced by AIA software at 17:24:06 ET on 04/01/2022 under Order No.2114285436 which expires on 02/22/2023, is not for resale, is licensed for one-time use only, and may only be used in accordance with the AIA Contract Documents® Terms of Service. To report copyright violations, e-mail copyright@aia.org.
User Notes: (913200243)

§ 4.4 Design-Builder's Proposal PHASE 1B

§ 4.4.1 Upon the Owner's issuance of a written consent to proceed under Section 4.3.2.1, the Design-Builder shall prepare and submit the Design-Builder's Proposal to the Owner. The Design-Builder's Proposal shall include the following:

.1 A list of the Preliminary Design documents and other information, including the Design-Builder's clarifications, assumptions and deviations from the Owner's Criteria, upon which the Design-Builder's Proposal is based;

.2 The proposed Contract Sum, including the compensation method.

.3 The proposed duration the Design-Builder shall need achieve anticipated Substantial Completion;

.4 An enumeration of any qualifications and exclusions, if applicable;

.5 A list of the Design-Builder's key personnel, Subcontractors and suppliers; and

.6 The date on which the Design-Builder's Proposal expires.

§ 4.4.2 Submission of the Design-Builder's Proposal shall constitute a representation by the Design-Builder that it has visited the site and become familiar with local conditions under which the Work is to be completed.

§ 4.4.3 If the Owner and Design-Builder agree on a proposal, the Owner and Design-Builder shall execute the Design-Build Amendment setting forth the terms of their agreement.

ARTICLE 5 WORK FOLLOWING EXECUTION OF THE DESIGN-BUILD AMENDMENT PHASE 2

§ 5.1 Construction Documents

§ 5.1.1 Upon the execution of the Design-Build Amendment, the Design-Builder shall prepare Construction Documents. The Construction Documents shall establish the quality levels of materials and systems required. The Construction Documents shall be consistent with the Design-Build Documents.

§ 5.1.2 The Design-Builder shall provide the Construction Documents to the Owner for the Owner's information. If the Owner discovers any deviations between the Construction Documents and the Design-Build Documents, the Owner shall promptly notify the Design-Builder of such deviations in writing. The Construction Documents shall not modify the Design-Build Documents unless the Owner and Design-Builder execute a Modification. The failure of the Owner to discover any such deviations shall not relieve the Design-Builder of the obligation to perform the Work in accordance with the Design-Build Documents.

§ 5.2 Construction

§ 5.2.1 Commencement. Except as permitted in Section 5.2.2, construction shall not commence prior to execution of the Design-Build Amendment.

§ 5.2.2 If the Owner and Design-Builder agree in writing, construction may proceed prior to the execution of the Design-Build Amendment. However, such authorization shall not waive the Owner's right to reject the Design-Builder's Proposal.

§ 5.2.3 The Design-Builder shall supervise and direct the Work, using the Design-Builder's best skill and attention. The Design-Builder shall be solely responsible for, and have control over, construction means, methods, techniques, sequences and procedures, and for coordinating all portions of the Work under the Contract, unless the Design-Build Documents give other specific instructions concerning these matters.

§ 5.2.4 The Design-Builder shall be responsible for inspection of portions of Work already performed to determine that such portions are in proper condition to receive subsequent Work.

§ 5.3 Labor and Materials

§ 5.3.1 Unless otherwise provided in the Design-Build Documents, the Design-Builder shall provide and pay for labor, materials, equipment, tools, construction equipment and machinery, water, heat, utilities, transportation, and other facilities and services, necessary for proper execution and completion of the Work, whether temporary or permanent, and whether or not incorporated or to be incorporated in the Work.

§ 5.3.2 When a material or system is specified in the Design-Build Documents, the Design-Builder may make substitutions only in accordance with Article 6.

AIA Document A141™ – 2014. Copyright © 2004 and 2014 by The American Institute of Architects. All rights reserved. The "American Institute of Architects," "AIA," the AIA Logo, and "AIA Contract Documents" are registered trademarks and may not be used without permission. This document was produced by AIA software at 17:24:06 ET on 04/01/2022 under Order No.2114285436 which expires on 02/22/2023, is not for resale, is licensed for one-time use only, and may only be used in accordance with the AIA Contract Documents® Terms of Service. To report copyright violations, e-mail copyright@aia.org.
User Notes: (913200243)

§ 5.3.3 The Design-Builder shall enforce strict discipline and good order among the Design-Builder's employees and other persons carrying out the Work. The Design-Builder shall not permit employment of unfit persons or persons not properly skilled in tasks assigned to them.

§ 5.3.4 The Design-Builder shall not contract with any person or entity declared ineligible under Federal laws or regulations from participating in federally assisted construction projects for to whom the Owner has made reasonable objection. The Design-Builder shall not be required to contract with anyone to whom the Design-Builder has reasonable objection.

§ 5.4 Taxes

The Design-Builder shall pay sales, consumer, use and similar taxes, for the Work provided by the Design-Builder, that are legally enacted when the Design-Build Amendment is executed, whether or not yet effective or merely scheduled to go into effect.

§ 5.5 Permits, Fees, Notices and Compliance with Laws

§ 5.5.1 Unless otherwise provided in the Design-Build Documents, the Design-Builder shall secure and pay for the building permit as well as any other permits, fees, licenses, and inspections by government agencies, necessary for proper execution of the Work and Substantial Completion of the Project.

§ 5.5.2 The Design-Builder shall comply with and give notices required by applicable laws, statutes, ordinances, codes, rules and regulations, and lawful orders of public authorities, applicable to performance of the Work.

§ 5.5.3 Concealed or Unknown Conditions. If the Design-Builder encounters conditions at the site that are (1) subsurface or otherwise concealed physical conditions that differ materially from those indicated in the Design-Build Documents or (2) unknown physical conditions of an unusual nature that differ materially from those ordinarily found to exist and generally recognized as inherent in construction activities of the character provided for in the Design-Build Documents, the Design-Builder shall promptly provide notice to the Owner before conditions are disturbed and in no event later than 21 days after first observance of the conditions. The Owner shall promptly investigate such conditions and, if the Owner determines that they differ materially and cause an increase or decrease in the Design-Builder's cost of, or time required for, performance of any part of the Work, shall recommend an equitable adjustment in the Contract Sum or Contract Time, or both. If the Owner determines that the conditions at the site are not materially different from those indicated in the Design-Build Documents and that no change in the terms of the Contract is justified, the Owner shall promptly notify the Design-Builder in writing, stating the reasons. If the Design-Builder disputes the Owner's determination or recommendation, the Design-Builder may proceed as provided in Article 14.

§ 5.5.4 If, in the course of the Work, the Design-Builder knowingly encounters human remains, or recognizes the existence of burial markers, archaeological sites, or wetlands, not indicated in the Design-Build Documents, the Design-Builder shall immediately suspend any operations that would affect them and shall notify the Owner. Upon receipt of such notice, the Owner shall promptly take any action necessary to obtain governmental authorization required to resume the operations. The Design-Builder shall continue to suspend such operations until otherwise instructed by the Owner but shall continue with all other operations that do not affect those remains or features. Requests for adjustments in the Contract Sum and Contract Time arising from the existence of such remains or features may be made as provided in Article 14.

§ 5.6 Allowances

§ 5.6.1 The Design-Builder shall include in the Contract Sum all allowances stated in the Design-Build Documents. Items covered by allowances shall be supplied for such amounts, and by such persons or entities as the Owner may direct, but the Design-Builder shall not be required to employ persons or entities to whom the Design-Builder has reasonable objection.

§ 5.6.2 Unless otherwise provided in the Design-Build Documents,

.1 allowances shall cover the cost to the Design-Builder of materials and equipment delivered at the site and all required taxes, less applicable trade discounts;

.2 the Design-Builder's costs for unloading and handling at the site, labor, installation costs, overhead, profit, and other expenses contemplated for stated allowance amounts, shall be included in the Contract Sum but not in the allowances; and

.3 whenever costs are more than or less than allowances, the Contract Sum shall be adjusted accordingly by Change Order. The amount of the Change Order shall reflect (1) the difference between actual costs and the allowances under Section 5.6.2.1 and (2) changes in Design-Builder's costs under Section 5.6.2.2.

AIA Document A141™ – 2014. Copyright © 2004 and 2014 by The American Institute of Architects. All rights reserved. The "American Institute of Architects," "AIA," the AIA Logo, and "AIA Contract Documents" are registered trademarks and may not be used without permission. This document was produced by AIA software at 17:24:06 ET on 04/01/2022 under Order No.2114285436 which expires on 02/22/2023, is not for resale, is licensed for one-time use only, and may only be used in accordance with the AIA Contract Documents® Terms of Service. To report copyright violations, e-mail copyright@aia.org.
User Notes: (913200243)

§ 5.6.3 The Owner shall make selections of materials and equipment with reasonable promptness for allowances requiring Owner selection.

§ 5.6.4 Escalation Allowance for potentially price-impacted material. The parties acknowledge certain markets providing essential materials to the Project are experiencing or are expected to experience significant, industry-wide economic fluctuation during the performance of this Agreement that may impact price increases due to escalation of materials, equipment, or products costs. The Design-Builder shall give the Owner written notice and documentation of the increased costs.

§ 5.7 Key Personnel, Subcontractors and Suppliers

§ 5.7.1 The Design-Builder shall not employ personnel, or contract with Subcontractors or suppliers to whom the Owner has made reasonable and timely objection. The Design-Builder shall not be required to contract with anyone to whom the Design-Builder has made reasonable and timely objection.

§ 5.7.2 If the Design-Builder changes any of the personnel, Subcontractors or suppliers identified in the Design-Build Amendment, the Design-Builder shall notify the Owner and provide the name and qualifications of the new personnel, Subcontractor or supplier. The Owner may reply within 14 days to the Design-Builder in writing, stating (1) whether the Owner has reasonable objection to the proposed personnel, Contractor or supplier or (2) that the Owner requires additional time to review. Failure of the Owner to reply within the 14-day period shall constitute notice of no reasonable objection.

§ 5.7.3 Except for those persons or entities already identified or required in the Design-Build Amendment, the Design-Builder, as soon as practicable after execution of the Design-Build Amendment, shall furnish in writing to the Owner the names of persons or entities (including those who are to furnish materials or equipment fabricated to a special design) proposed for each principal portion of the Work. The Owner may reply within 14 days to the Design-Builder in writing stating (1) whether the Owner has reasonable objection to any such proposed person or entity or (2) that the Owner requires additional time for review. Failure of the Owner to reply within the 14-day period shall constitute notice of no reasonable objection.

§ 5.7.3.1 If the Owner has reasonable objection to a person or entity proposed by the Design-Builder, the Design-Builder shall propose another to whom the Owner has no reasonable objection. If the rejected person or entity was reasonably capable of performing the Work, the Contract Sum and Contract Time shall be increased or decreased by the difference, if any, occasioned by such change, and an appropriate Change Order shall be issued before commencement of the substitute person or entity's Work. However, no increase in the Contract Sum or Contract Time shall be allowed for such change unless the Design-Builder has acted promptly and responsively in submitting names as required.

§ 5.8 Documents and Submittals at the Site

The Design-Builder shall maintain at the site for the Owner one copy of the Design-Build Documents and a current set of the Construction Documents, in good order and marked currently to indicate field changes and selections made during construction, and one copy of reviewed Submittals, these shall be in electronic form or paper copy. The Design-Builder shall deliver these items to the Owner in accordance with Section 9.10.2 as a record of the Work as constructed.

§ 5.9 Use of Site

The Design-Builder shall confine operations at the site to areas permitted by applicable laws, statutes, ordinances, codes, rules and regulations, lawful orders of public authorities, and the Design-Build Documents, and shall not unreasonably encumber the site with materials or equipment.

§ 5.10 Cutting and Patching

The Design-Builder shall not cut, patch or otherwise alter fully or partially completed construction by the Owner or a separate contractor except with written consent of the Owner and of such separate contractor; such consent shall not be unreasonably withheld. The Design-Builder shall not unreasonably withhold from the Owner or a separate contractor the Design-Builder's consent to cutting or otherwise altering the Work.

§ 5.11 Cleaning Up

§ 5.11.1 The Design-Builder shall keep the premises and surrounding area free from accumulation of waste materials or rubbish caused by operations under the Contract. At completion of the Work, the Design-Builder shall remove waste materials, rubbish, the Design-Builder's tools, construction equipment, machinery and surplus materials from and about the Project.

AIA Document A141™ – 2014. Copyright © 2004 and 2014 by The American Institute of Architects. All rights reserved. The "American Institute of Architects," "AIA," the AIA Logo, and "AIA Contract Documents" are registered trademarks and may not be used without permission. This document was produced by AIA software at 17:24:06 ET on 04/01/2022 under Order No.2114285436 which expires on 02/22/2023, is not for resale, is licensed for one-time use only, and may only be used in accordance with the AIA Contract Documents® Terms of Service. To report copyright violations, e-mail copyright@aia.org.
User Notes: (913200243)

§ 5.11.2 If the Design-Builder fails to clean up as provided in the Design-Build Documents, the Owner may do so and Owner shall be entitled to reimbursement from the Design-Builder.

§ 5.12 Access to Work

The Design-Builder shall provide the Owner and its separate contractors and consultants access to the Work in preparation and progress wherever located. The Design-Builder shall notify the Owner regarding Project safety criteria and programs, which the Owner, and its contractors and consultants, shall comply with while at the site. Design-Builder recognizes the importance of performing the Work in a safe manner so as to assist with preventing damage, injury or loss to, all individuals at the Site, whether working or visiting, shall report to the Design-Builder's field office and sign in before entering the Project Site.

§ 5.13 Construction by Owner or by Separate Contractors

§ 5.13.1 Owner's Right to Perform Construction and to Award Separate Contracts

§ 5.13.1.1 The Owner reserves the right to perform construction or operations related to the Project with the Owner's own forces; and to award separate contracts in connection with other portions of the Project, or other construction or operations on the site, under terms and conditions identical or substantially similar to this Contract, including those terms and conditions related to insurance and waiver of subrogation. The Owner shall notify the Design-Builder promptly after execution of any separate contract. If the Design-Builder claims that delay or additional cost is involved because of such action by the Owner, the Design-Builder shall make a Claim as provided in Article 14.

§ 5.13.1.2 When separate contracts are awarded for different portions of the Project or other construction or operations on the site, the term "Design-Builder" in the Design-Build Documents in each case shall mean the individual or entity that executes each separate agreement with the Owner.

§ 5.13.1.3 The Owner shall provide for coordination of the activities of the Owner's own forces, and of each separate contractor, with the Work of the Design-Builder, who shall cooperate with them. The Design-Builder shall participate with other separate contractors and the Owner in reviewing their construction schedules. The Design-Builder shall make any revisions to the construction schedule deemed necessary after a joint review and mutual agreement. The construction schedules shall then constitute the schedules to be used by the Design-Builder, separate contractors and the Owner until subsequently revised.

§ 5.13.1.4 Unless otherwise provided in the Design-Build Documents, when the Owner performs construction or operations related to the Project with the Owner's own forces or separate contractors, the Owner shall be deemed to be subject to the same obligations, and to have the same rights, that apply to the Design-Builder under the Contract.

§ 5.14 Mutual Responsibility

§ 5.14.1 The Design-Builder shall afford the Owner and separate contractors reasonable opportunity for introduction and storage of their materials and equipment and performance of their activities, and shall connect and coordinate the Design-Builder's construction and operations with theirs as required by the Design-Build Documents.

§ 5.14.2 If part of the Design-Builder's Work depends upon construction or operations by the Owner or a separate contractor, the Design-Builder shall, prior to proceeding with that portion of the Work, prepare a written report to the Owner, identifying apparent discrepancies or defects in the construction or operations by the Owner or separate contractor that would render it unsuitable for proper execution and results of the Design-Builder's Work. Failure of the Design-Builder to report shall constitute an acknowledgment that the Owner's or separate contractor's completed or partially completed construction is fit and proper to receive the Design-Builder's Work, except as to defects not then reasonably discoverable.

§ 5.14.3 The Design-Builder shall reimburse the Owner for costs the Owner incurs that are payable to a separate contractor because of the Design-Builder's delays, improperly timed activities or defective construction. The Owner shall be responsible to the Design-Builder for costs the Design-Builder incurs because of a separate contractor's delays, improperly timed activities, damage to the Work or defective construction.

§ 5.14.4 The Design-Builder shall promptly remedy damage the Design-Builder wrongfully causes to completed or partially completed construction or to property of the Owner or separate contractors as provided in Section 10.2.5.

§ 5.14.5 The Owner and each separate contractor shall have the same responsibilities for cutting and patching the Work as the Design-Builder has with respect to the construction of the Owner or separate contractors in Section 5.10.

AIA Document A141™ – 2014. Copyright © 2004 and 2014 by The American Institute of Architects. All rights reserved. The "American Institute of Architects," "AIA," the AIA Logo, and "AIA Contract Documents" are registered trademarks and may not be used without permission. This document was produced by AIA software at 17:24:06 ET on 04/01/2022 under Order No.2114285436 which expires on 02/22/2023, is not for resale, is licensed for one-time use only, and may only be used in accordance with the AIA Contract Documents® Terms of Service. To report copyright violations, e-mail copyright@aia.org.
User Notes: (913200243)

§ 5.15 Owner's Right to Clean Up

If a dispute arises among the Design-Builder, separate contractors and the Owner as to the responsibility under their respective contracts for maintaining the premises and surrounding area free from waste materials and rubbish, the Owner may, after reasonable notice, clean up and will allocate the cost among those responsible.

ARTICLE 6 CHANGES IN THE WORK

§ 6.1 General

§ 6.1.1 Changes in the Work may be accomplished after execution of the Contract, and without invalidating the Contract, by Change Order or Change Directive, subject to the limitations stated in this Article 6 and elsewhere in the Design-Build Documents.

§ 6.1.2 A Change Order shall be based upon agreement between the Owner and Design-Builder. The Owner may issue a Change Directive without agreement by the Design-Builder.

§ 6.1.3 Changes in the Work shall be performed under applicable provisions of the Design-Build Documents, and the Design-Builder shall proceed promptly, unless otherwise provided in the Change Order or Change Directive.

§ 6.2 Change Orders

A

(Paragraphs deleted)

change order is a written order to the Design-Builder utilizing Form RD 1924-7, "Contract Change Order," signed by the Owner, Independent Inspector, Design-Builder, and the Agency representative. It is issued after the execution of the Contract, authorizing a change in the Work or an adjustment in the Contract Sum or the Contract Time. The Contract Sum and the Contract Time may be changed only by Change Order. The Design-Builder's signing of the change order indicates complete agreement therein.

§ 6.3 Change Directives

§ 6.3.1 A Change Directive is a written order signed by the Owner directing a change in the Work prior to agreement on adjustment, if any, in the Contract Sum or, if prior to execution of the Design-Build Amendment, the adjustment in the Design-Builder's compensation, or Contract Time. The Owner may by Change Directive, without invalidating the Contract, order changes in the Work within the general scope of the Contract consisting of additions, deletions or other revisions, the Contract Sum or, if prior to execution of the Design-Build Amendment, the adjustment in the Design-Builder's compensation, and Contract Time being adjusted accordingly. A Construction Change Directive may be used only for a change in response to an emergency, as described in Paragraph 10.4.

§ 6.3.2 A Change Directive shall be used in the absence of total agreement on the terms of a Change Order.

§ 6.3.3

(Paragraphs deleted)

Intentionally Deleted.

§ 6.3.4 If unit prices are stated in the Design-Build Documents or subsequently agreed upon, and if quantities originally contemplated are materially changed in a proposed Change Order or Change Directive so that application of such unit prices to quantities of Work proposed will cause substantial inequity to the Owner or Design-Builder, the applicable unit prices shall be equitably adjusted.

§ 6.3.5 Intentionally Deleted.

§ 6.3.6 A Change Directive signed by the Design-Builder indicates the Design-Builder's agreement therewith, including adjustment in Contract Sum or, if prior to execution of the Design-Build Amendment, the adjustment in the Design-Builder's compensation, and Contract Time or the method for determining them. Such agreement shall be effective immediately and shall be recorded as a Change Order.

§ 6.3.7

(Paragraphs deleted)

Intentionally Deleted.

AIA Document A141™ – 2014. Copyright © 2004 and 2014 by The American Institute of Architects. All rights reserved. The "American Institute of Architects," "AIA," the AIA Logo, and "AIA Contract Documents" are registered trademarks and may not be used without permission. This document was produced by AIA software at 17:24:06 ET on 04/01/2022 under Order No.2114285436 which expires on 02/22/2023, is not for resale, is licensed for one-time use only, and may only be used in accordance with the AIA Contract Documents® Terms of Service. To report copyright violations, e-mail copyright@aia.org.
User Notes: (913200243)

§ 6.3.8 The amount of credit to be allowed by the Design-Builder to the Owner for a deletion or change that results in a net decrease in the Contract Sum or, if prior to execution of the Design-Build Amendment, in the Design-Builder's compensation, shall be actual net cost (excluding Design-Builder's overhead or Fee). When both additions and credits covering related Work or substitutions are involved in a change, the allowance for overhead and profit shall be figured on the basis of net increase, if any, with respect to that change.

§ 6.3.9 Pending final determination of the total cost of a Change Directive to the Owner, the Design-Builder may request payment for Work completed under the Change Directive in Applications for Payment. The Owner will make an interim determination for purposes of certification for payment for those costs deemed to be reasonably justified. The Owner's interim determination of cost shall adjust the Contract Sum or, if prior to execution of the Design-Build Amendment, the Design-Builder's compensation, on the same basis as a Change Order, subject to the right of Design-Builder to disagree and assert a Claim in accordance with Article 14.

§ 6.3.10 When the Owner and Design-Builder agree with a determination concerning the adjustments in the Contract Sum or, if prior to execution of the Design-Build Amendment, the adjustment in the Design-Builder's compensation and Contract Time, or otherwise reach agreement upon the adjustments, such agreement shall be effective immediately and the Owner and Design-Builder shall execute a Change Order. Change Orders may be issued for all or any part of a Change Directive.

ARTICLE 7 OWNER'S RESPONSIBILITIES

§ 7.1 General

§ 7.1.1 The Owner shall designate in writing a representative who shall have express authority to bind the Owner with respect to all Project matters requiring the Owner's approval or authorization. The Owner shall provide the Design-Builder with Agency standard Contract Document Guides.

§ 7.1.2 The Owner shall render decisions in a timely manner and in accordance with the Design-Builder's schedule agreed to by the Owner. The Owner shall furnish to the Design-Builder, within 15 days after receipt of a written request, information necessary and relevant for the Design-Builder to evaluate, give notice of or enforce mechanic's lien rights. Such information shall include a correct statement of the record legal title to the property on which the Project is located, usually referred to as the site, and the Owner's interest therein.

§ 7.2 Information and Services Required of the Owner

§ 7.2.1 The Owner shall furnish information or services required of the Owner by the Design-Build Documents with reasonable promptness.

§ 7.2.2 The Owner shall provide, to the extent under the Owner's control and if not required by the Design-Build Documents to be provided by the Design-Builder, the results and reports of prior tests, inspections or investigations conducted for the Project involving structural or mechanical systems; chemical, air and water pollution; hazardous materials; or environmental and subsurface conditions and information regarding the presence of pollutants at the Project site. Upon receipt of a written request from the Design-Builder, the Owner shall also provide surveys describing physical characteristics, legal limitations and utility locations for the site of the Project, and a legal description of the site under the Owner's control.

§ 7.2.3 The Owner shall promptly obtain easements, zoning variances, and legal authorizations or entitlements regarding site utilization where essential to the execution of the Project.

§ 7.2.4 The Owner shall cooperate with the Design-Builder in securing building and other permits, licenses and inspections.

§ 7.2.5 The services, information, surveys and reports required to be provided by the Owner under this Agreement, shall be furnished at the Owner's expense, and except as otherwise specifically provided in this Agreement or elsewhere in the Design-Build Documents or to the extent the Owner advises the Design-Builder to the contrary in writing, the Design-Builder shall be entitled to rely upon the accuracy and completeness thereof. In no event shall the Design-Builder be relieved of its responsibility to exercise proper precautions relating to the safe performance of the Work.

§ 7.2.6 If the Owner observes or otherwise becomes aware of a fault or defect in the Work or non-conformity with the Design-Build Documents, the Owner shall give prompt written notice thereof to the Design-Builder.

AIA Document A141™ – 2014. Copyright © 2004 and 2014 by The American Institute of Architects. All rights reserved. The "American Institute of Architects," "AIA," the AIA Logo, and "AIA Contract Documents" are registered trademarks and may not be used without permission. This document was produced by AIA software at 17:24:06 ET on 04/01/2022 under Order No.2114285436 which expires on 02/22/2023, is not for resale, is licensed for one-time use only, and may only be used in accordance with the AIA Contract Documents® Terms of Service. To report copyright violations, e-mail copyright@aia.org.
User Notes: (913200243)

§ 7.2.7 Prior to the execution of the Design-Build Amendment, the Design-Builder may request in writing that the Owner provide reasonable evidence that the Owner has made financial arrangements to fulfill the Owner's obligations under the Design-Build Documents and the Design-Builder's Proposal. Thereafter, the Design-Builder may only request such evidence if (1) the Owner fails to make payments to the Design-Builder as the Design-Build Documents require; (2) a change in the Work materially changes the Contract Sum; or (3) the Design-Builder identifies in writing a reasonable concern regarding the Owner's ability to make payment when due. The Owner shall furnish such evidence as a condition precedent to commencement or continuation of the Work or the portion of the Work affected by a material change. After the Owner furnishes the evidence, the Owner shall not materially vary such financial arrangements without prior notice to the Design-Builder.

§ 7.2.8 Except as otherwise provided in the Design-Build Documents or when direct communications have been specially authorized, the Owner shall communicate through the Design-Builder with persons or entities employed or retained by the Design-Builder.

§ 7.2.9 Unless required by the Design-Build Documents to be provided by the Design-Builder, the Owner shall, upon request from the Design-Builder, furnish the services of geotechnical engineers or other consultants for investigation of subsurface, air and water conditions when such services are reasonably necessary to properly carry out the design services furnished by the Design-Builder. In such event, the Design-Builder shall specify the services required. Such services may include, but are not limited to, test borings, test pits, determinations of soil bearing values, percolation tests, evaluations of hazardous materials, ground corrosion and resistivity tests, and necessary operations for anticipating subsoil conditions. The services of geotechnical engineer(s) or other consultants shall include preparation and submission of all appropriate reports and professional recommendations.

§ 7.2.10 The Owner shall purchase and maintain insurance as set forth in Exhibit B.

§ 7.3 Submittals

§ 7.3.1 The Owner shall review and approve or take other appropriate action on Submittals. Review of Submittals is not conducted for the purpose of determining the accuracy and completeness of other details, such as dimensions and quantities; or for substantiating instructions for installation or performance of equipment or systems; or for determining that the Submittals are in conformance with the Design-Build Documents, all of which remain the responsibility of the Design-Builder as required by the Design-Build Documents. The Owner's action will be taken in accordance with the submittal schedule approved by the Owner or, in the absence of an approved submittal schedule, with reasonable promptness while allowing sufficient time in the Owner's judgment to permit adequate review. The Owner's review of Submittals shall not relieve the Design-Builder of the obligations under Sections 3.1.11, 3.1.12, and 5.2.3. The Owner's review shall not constitute approval of safety precautions or, unless otherwise specifically stated by the Owner, of any construction means, methods, techniques, sequences or procedures. The Owner's approval of a specific item shall not indicate approval of an assembly of which the item is a component.

§ 7.3.2 Upon review of the Submittals required by the Design-Build Documents, the Owner shall notify the Design-Builder of any non-conformance with the Design-Build Documents the Owner discovers.

§ 7.4 Visits to the site by the Owner shall not be construed to create an obligation on the part of the Owner to make on-site inspections to check the quality or quantity of the Work. The Owner shall neither have control over or charge of, nor be responsible for, the construction means, methods, techniques, sequences or procedures, or for the safety precautions and programs in connection with the Work, because these are solely the Design-Builder's rights and responsibilities under the Design-Build Documents.

§ 7.5 The Owner shall not be responsible for the Design-Builder's failure to perform the Work in accordance with the requirements of the Design-Build Documents. The Owner shall not have control over or charge of, and will not be responsible for acts or omissions of the Design-Builder, Architect, Consultants, Subcontractors, or their agents or employees, or any other persons or entities performing portions of the Work for the Design-Builder.

§ 7.6 The Owner has the authority to reject Work that does not conform to the Design-Build Documents. The Owner shall have authority to require inspection or testing of the Work in accordance with Section 15.5.2, whether or not such Work is fabricated, installed or completed. However, neither this authority of the Owner nor a decision made in good faith either to exercise or not to exercise such authority shall give rise to a duty or responsibility of the Owner to the Design-Builder, the Architect, Consultants, Subcontractors, material and equipment suppliers, their agents or employees, or other persons or entities performing portions of the Work.

AIA Document A141™ – 2014. Copyright © 2004 and 2014 by The American Institute of Architects. All rights reserved. The "American Institute of Architects," "AIA," the AIA Logo, and "AIA Contract Documents" are registered trademarks and may not be used without permission. This document was produced by AIA software at 17:24:06 ET on 04/01/2022 under Order No.2114285436 which expires on 02/22/2023, is not for resale, is licensed for one-time use only, and may only be used in accordance with the AIA Contract Documents® Terms of Service. To report copyright violations, e-mail copyright@aia.org.
User Notes: (913200243)

§ 7.7 The Owner shall determine the date or dates of Substantial Completion in accordance with Section 9.8 and the date of final completion in accordance with Section 9.10.

§ 7.8 Owner's Right to Stop Work

If the Design-Builder fails to correct Work which is not in accordance with the requirements of the Design-Build Documents as required by Section 11.2 or persistently fails to carry out Work in accordance with the Design-Build Documents, the Owner may issue a written order to the Design-Builder to stop the Work, or any portion thereof, until the cause for such order has been eliminated; however, the right of the Owner to stop the Work shall not give rise to a duty on the part of the Owner to exercise this right for the benefit of the Design-Builder or any other person or entity, except to the extent required by Section 5.13.1.3.

§ 7.9 Owner's Right to Carry Out the Work

If the Design-Builder defaults or neglects to carry out the Work in accordance with the Design-Build Documents and fails within a ten-day period after receipt of written notice from the Owner to commence and continue correction of such default or neglect with diligence and promptness, the Owner may, without prejudice to other remedies the Owner may have, correct such deficiencies. In such case, an appropriate Change Order shall be issued deducting from payments then or thereafter due the Design-Builder the reasonable cost of correcting such deficiencies. If payments then or thereafter due the Design-Builder are not sufficient to cover such amounts, the Design-Builder shall pay the difference to the Owner.

ARTICLE 8 TIME

§ 8.1 Progress and Completion

§ 8.1.1 Time limits stated in the Design-Build Documents are of the essence of the Contract. By executing the Design-Build Amendment the Design-Builder confirms that the Contract Time is a reasonable period for performing the Work.

§ 8.1.2 The Design-Builder shall not, except by agreement of the Owner in writing, commence the Work prior to the effective date of insurance, other than property insurance, required by this Contract. The Contract Time shall not be adjusted as a result of the Design-Builder's failure to obtain insurance required under this Contract.

§ 8.1.3 The Design-Builder shall proceed expeditiously with adequate forces and shall achieve Substantial Completion within the Contract Time.

§ 8.2 Delays and Extensions of Time

§ 8.2.1 The Contract Time shall be extended, and Design-Builder shall be entitled to an increase in the Contract Sum for its additional General Conditions and increased costs of labor and materials that are attributable to one or more of the following Impacts. If the Design-Builder is delayed at any time in the commencement or progress of the Work by an act or neglect of the Owner or of a consultant or separate contractor employed by the Owner; or by changes ordered in the Work by the Owner; or by labor disputes, fire, unusual delay in deliveries, unavoidable casualties or other causes beyond the Design-Builder's control; disruptions in labor or materials resulting from a health crisis regardless of whether epidemic, pandemic or isolated to areas from which such labor and materials are supplied; or by delay authorized by the Owner pending mediation and binding dispute resolution or by other causes that the Owner determines may justify delay, then the Contract Time shall be extended by Change Order for such reasonable time as the Owner may determine. Any time gained by the Design-Builder on the Project Schedule shall not be offset against any delays as described herein.

§ 8.2.2 Claims relating to time shall be made in accordance with applicable provisions of Article 14.

§ 8.2.3 This Section 8.2 does not preclude recovery of damages for delay by either party under other provisions of the Design-Build Documents.

ARTICLE 9 PAYMENT APPLICATIONS AND PROJECT COMPLETION

§ 9.1 Contract Sum

The Contract Sum is stated in the Design-Build Amendment.

§ 9.2 Schedule of Values

Where the Contract Sum is based on a stipulated sum or Guaranteed Maximum Price, the Design-Builder, prior to the first Application for Payment after execution of the Design-Build Amendment shall submit to the Owner a schedule of values allocating the entire Contract Sum to the various portions of the Work and prepared in such form and supported by such data to

AIA Document A141™ – 2014. Copyright © 2004 and 2014 by The American Institute of Architects. All rights reserved. The "American Institute of Architects," "AIA," the AIA Logo, and "AIA Contract Documents" are registered trademarks and may not be used without permission. This document was produced by AIA software at 17:24:06 ET on 04/01/2022 under Order No.2114285436 which expires on 02/22/2023, is not for resale, is licensed for one-time use only, and may only be used in accordance with the AIA Contract Documents® Terms of Service. To report copyright violations, e-mail copyright@aia.org.
User Notes: (913200243)

substantiate its accuracy as the Owner may require. This schedule, unless objected to by the Owner, shall be used as a basis for reviewing the Design-Builder's Applications for Payment.

§ 9.3 Applications for Payment

§ 9.3.1 At least ten days before the date established for each progress payment, the Design-Builder shall submit to the Owner an itemized Application for Payment using AIA Document G-702, 'Application and Certificate for Payment' or Form RD 1924-18, 'Partial Payment Estimate', for completed portions of the Work. The application shall be notarized, if required, and supported by data substantiating the Design-Builder's right to payment as the Owner may require, such as copies of requisitions from the Architect, Consultants, Subcontractors, and material suppliers, and shall reflect retainage if provided for in the Design-Build Documents.

§ 9.3.1.1 As provided in Section 6.3.9, Applications for Payment may include requests for payment on account of changes in the Work that have been properly authorized by Change Directives, or by interim determinations of the Owner, but not yet included in Change Orders.

§ 9.3.1.2 Applications for Payment shall not include requests for payment for portions of the Work for which the Design-Builder does not intend to pay the Architect, Consultant, Contractor, material supplier, or other persons or entities providing services or work for the Design-Builder, unless such Work has been performed by others whom the Design-Builder intends to pay.

§ 9.3.1.2 The Design-Builder shall obtain Agency concurrence on all Applications of Payment before payment is made.

§ 9.3.2 Unless otherwise provided in the Design-Build Documents, payments shall be made for services provided as well as materials and equipment delivered and suitably stored at the site for subsequent incorporation in the Work. If approved in advance by the Owner, payment may similarly be made for materials and equipment suitably stored off the site at a location agreed upon in writing. Payment for materials and equipment stored on or off the site shall be conditioned upon compliance by the Design-Builder with procedures satisfactory to the Owner to establish the Owner's title to such materials and equipment or otherwise protect the Owner's interest, and shall include the costs of applicable insurance, storage and transportation to the site for such materials and equipment stored off the site.

§ 9.3.3 The Design-Builder warrants that title to all Work, other than Instruments of Service, covered by an Application for Payment will pass to the Owner no later than the time of payment. The Design-Builder further warrants that, upon submittal of an Application for Payment, all Work for which Certificates for Payment have been previously issued and payments received from the Owner shall, to the best of the Design-Builder's knowledge, information and belief, be free and clear of liens, claims, security interests or encumbrances in favor of the Design-Builder, Architect, Consultants, Subcontractors, material suppliers, or other persons or entities entitled to make a claim by reason of having provided labor, materials and equipment relating to the Work.

§ 9.4 Certificates for Payment

The Owner shall, within seven days after receipt of the Design-Builder's Application for Payment, issue to the Design-Builder a Certificate for Payment indicating the amount the Owner determines is properly due, and notify the Design-Builder in writing of the Owner's reasons for withholding certification in whole or in part as provided in Section 9.5.1. Agency concurrence is required on all Certificates of Payment before payment is made.

§ 9.5 Decisions to Withhold Certification

§ 9.5.1 The Owner may withhold a Certificate for Payment in whole or in part to the extent reasonably necessary to protect the Owner due to the Owner's determination that the Work has not progressed to the point indicated in the Design-Builder's Application for Payment, or the quality of the Work is not in accordance with the Design-Build Documents. If the Owner is unable to certify payment in the amount of the Application, the Owner will notify the Design-Builder as provided in Section 9.4. If the Design-Builder and Owner cannot agree on a revised amount, the Owner will promptly issue a Certificate for Payment for the amount that the Owner deems to be due and owing. The Owner may also withhold a Certificate for Payment or, because of subsequently discovered evidence, may nullify the whole or a part of a Certificate for Payment previously issued to such extent as may be necessary to protect the Owner from loss for which the Design-Builder is responsible because of

.1 defective Work, including design and construction, not remedied;

.2 third party claims filed or reasonable evidence indicating probable filing of such claims unless security acceptable to the Owner is provided by the Design-Builder or covered by insurance or basis of Change Order;

AIA Document A141™ – 2014. Copyright © 2004 and 2014 by The American Institute of Architects. All rights reserved. The "American Institute of Architects," "AIA," the AIA Logo, and "AIA Contract Documents" are registered trademarks and may not be used without permission. This document was produced by AIA software at 17:24:06 ET on 04/01/2022 under Order No.2114285436 which expires on 02/22/2023, is not for resale, is licensed for one-time use only, and may only be used in accordance with the AIA Contract Documents® Terms of Service. To report copyright violations, e-mail copyright@aia.org.
User Notes: (913200243)

.3 failure of the Design-Builder to make payments properly to the Architect, Consultants, Subcontractors or others, for services, labor, materials or equipment;

.4 reasonable evidence that the Work cannot be completed for the unpaid balance of the Contract Sum;

.5 damage to the Owner or a separate contractor not covered by insurance;

.6 reasonable evidence that the Work will not be completed within the Contract Time, and that the unpaid balance would not be adequate to cover actual or liquidated damages for the anticipated delay; or

.7 repeated failure to carry out the Work in accordance with the Design-Build Documents.

§ 9.5.2 When the above reasons for withholding certification are removed, certification will be made for amounts previously withheld.

§ 9.5.3 If the Owner withholds certification for payment under Section 9.5.1.3, the Owner may, at its sole option, issue joint checks to the Design-Builder and to the Architect or any Consultants, Contractor, material or equipment suppliers, or other persons or entities providing services or work for the Design-Builder to whom the Design-Builder failed to make payment for Work properly performed or material or equipment suitably delivered.

§ 9.6 Progress Payments

§ 9.6.1 After the Owner has issued a Certificate for Payment, the Owner shall make payment in the manner and within the time provided in the Design-Build Documents.

§ 9.6.2 The Design-Builder shall pay each Architect, Consultant, Contractor, and other person or entity providing services or work for the Design-Builder no later than the time period required by applicable law, but in no event more than seven days after receipt of payment from the Owner the amount to which the Architect, Consultant, Contractor, and other person or entity providing services or work for the Design-Builder is entitled, reflecting percentages actually retained from payments to the Design-Builder on account of the portion of the Work performed by the Architect, Consultant, Contractor, or other person or entity. The Design-Builder shall, by appropriate agreement with each Architect, Consultant, Contractor, and other person or entity providing services or work for the Design-Builder, require each Architect, Consultant, Contractor, and other person or entity providing services or work for the Design-Builder to make payments to subconsultants and subcontractors in a similar manner.

§ 9.6.3 The Owner will, on request and if practicable, furnish to the Architect, a Consultant, Contractor, or other person or entity providing services or work for the Design-Builder, information regarding percentages of completion or amounts applied for by the Design-Builder and action taken thereon by the Owner on account of portions of the Work done by such Architect, Consultant, Contractor or other person or entity providing services or work for the Design-Builder.

§ 9.6.4 The Owner has the right to request written evidence from the Design-Builder that the Design-Builder has properly paid the Architect, Consultants, Subcontractors, or other person or entity providing services or work for the Design-Builder, amounts paid by the Owner to the Design-Builder for the Work. If the Design-Builder fails to furnish such evidence within seven days, the Owner shall have the right to contact the Architect, Consultants, and Subcontractors to ascertain whether they have been properly paid. The Owner shall have no obligation to pay or to see to the payment of money to a Consultant or Contractor, except as may otherwise be required by law.

§ 9.6.5 Design-Builder payments to material and equipment suppliers shall be treated in a manner similar to that provided in Sections 9.6.2, 9.6.3 and 9.6.4.

§ 9.6.6 A Certificate for Payment, a progress payment, or partial or entire use or occupancy of the Project by the Owner shall not constitute acceptance of Work not in accordance with the Design-Build Documents.

§ 9.6.7 Unless the Design-Builder provides the Owner with a payment bond in the full penal sum of the Contract Sum, payments received by the Design-Builder for Work properly performed by the Architect, Consultants, Subcontractors and other person or entity providing services or work for the Design-Builder, shall be held by the Design-Builder for the Architect and those Consultants, Subcontractors, or other person or entity providing services or work for the Design-Builder, for which payment was made by the Owner. Nothing contained herein shall require money to be placed in a separate account and not commingled with money of the Design-Builder, shall create any fiduciary liability or tort liability on the part of the Design-Builder for breach of trust or shall entitle any person or entity to an award of punitive damages against the Design-Builder for breach of the requirements of this provision.

AIA Document A141™ – 2014. Copyright © 2004 and 2014 by The American Institute of Architects. All rights reserved. The "American Institute of Architects," "AIA," the AIA Logo, and "AIA Contract Documents" are registered trademarks and may not be used without permission. This document was produced by AIA software at 17:24:06 ET on 04/01/2022 under Order No.2114285436 which expires on 02/22/2023, is not for resale, is licensed for one-time use only, and may only be used in accordance with the AIA Contract Documents® Terms of Service. To report copyright violations, e-mail copyright@aia.org.
User Notes: (913200243)

§ 9.6.8 No progress payments will be made that deplete the retainage, place in escrow any funds that are required for retainage, or invest the retainage for the benefit of the Design-Builder.

§ 9.7 Failure of Payment

If the Owner does not issue a Certificate for Payment, through no fault of the Design-Builder, within the time required by the Design-Build Documents, then the Design-Builder may, upon ten (10) additional days' written notice to the Owner, stop the Work until payment of the amount owing has been received. The Contract Time shall be extended appropriately and the Contract Sum shall be increased by the amount of the Design-Builder's reasonable costs of shut-down, delay and start-up, plus interest as provided for in the Design-Build Documents.

§ 9.8 Substantial Completion

§ 9.8.1 Substantial Completion is the stage in the progress of the Work when the Work or designated portion thereof is sufficiently complete in accordance with the Design-Build Documents so that the Owner can occupy or utilize the Work for its intended use. The date of Substantial Completion is the date certified by the Owner in accordance with this Section 9.8.

§ 9.8.2 When the Design-Builder considers that the Work, or a portion thereof which the Owner agrees to accept separately, is substantially complete, the Design-Builder shall prepare and submit to the Owner a comprehensive list of items to be completed or corrected prior to final payment. Failure to include an item on such list does not alter the responsibility of the Design-Builder to complete all Work in accordance with the Design-Build Documents.

§ 9.8.3 Upon receipt of the Design-Builder's list, the Owner shall make an inspection to determine whether the Work or designated portion thereof is substantially complete. If the Owner's inspection discloses any item, whether or not included on the Design-Builder's list, which is not sufficiently complete in accordance with the Design-Build Documents so that the Owner can occupy or utilize the Work or designated portion thereof for its intended use, the Design-Builder shall, before issuance of the Certificate of Substantial Completion, complete or correct such item upon notification by the Owner. In such case, the Design-Builder shall then submit a request for another inspection by the Owner to determine Substantial Completion.

§ 9.8.4 Prior to issuance of the Certificate of Substantial Completion under Section 9.8.5, the Owner and Design-Builder shall discuss and then determine the parties' obligations to obtain and maintain property insurance following issuance of the Certificate of Substantial Completion.

§ 9.8.5 When the Work or designated portion thereof is substantially complete, the Design-Builder will prepare, in collaboration with the Agency Architect or Engineer, for the Owner's signature a Certificate of Substantial Completion that shall, upon the Owner's signature, establish the date of Substantial Completion; establish responsibilities of the Owner and Design-Builder for security, maintenance, heat, utilities, damage to the Work and insurance; and fix the time within which the Design-Builder shall finish all items on the list accompanying the Certificate. Warranties required by the Design-Build Documents shall commence on the date of Substantial Completion of the Work or designated portion thereof unless otherwise provided in the Certificate of Substantial Completion.

§ 9.8.6 The certificate of substantial completion shall be submitted by the Design-Builder to the Owner and the Agency for written acceptance of responsibilities assigned to it in the certificate. When the Work has been substantially completed, except for the work which cannot be completed because of weather conditions, lack of materials or other reasons, which, in the judgment of the Owner, are valid reasons for non-completion, the Owner may make additional payments, retaining at all times an amount sufficient to cover the estimated cost of the work still to be completed.

§ 9.9 Partial Occupancy or Use

§ 9.9.1 The Design-Builder agrees to the use and occupancy of a portion or unit of the Project before formal acceptance by the Owner under the following conditions:

9.9.1.1 A Certificate of Substantial Completion shall be prepared and executed as provided in subparagraph 9.8.4, except that when, in the opinion of the Inspecting Architect, the Design-Builder is chargeable with unwarranted delay in completing the Work or the Contract requirements, the signature of the Design-Builder will not be required. The Certificate of Substantial Completion shall be accompanied by copies of Design-Builder's insurance policies, written endorsements of the Design-Builder's insurance carrier, and the surety permitting occupancy by the Owner during the remaining period of the

AIA Document A141™ – 2014. Copyright © 2004 and 2014 by The American Institute of Architects. All rights reserved. The "American Institute of Architects," "AIA," the AIA Logo, and "AIA Contract Documents" are registered trademarks and may not be used without permission. This document was produced by AIA software at 17:24:06 ET on 04/01/2022 under Order No.2114285436 which expires on 02/22/2023, is not for resale, is licensed for one-time use only, and may only be used in accordance with the AIA Contract Documents® Terms of Service. To report copyright violations, e-mail copyright@aia.org.
User Notes: (913200243)

Project Work. Occupancy and use by the Owner shall not commence until authorized by public authorities having jurisdiction over the Work.

9.9.1.2 Occupancy by the Owner shall not be construed by the Design-Builder as being an acceptance of that part of the Project to be occupied.

9.9.1.3 The Design-Builder shall not be held responsible for any damage to the occupied part of the Project resulting from the Owner's occupancy.

9.9.1.4 Occupancy by the Owner shall not be deemed to constitute a waiver of existing claims in behalf of the Owner or Design-Builder against each other.

9.9.1.5 If the Project consists of more than one building, and one of the buildings is to be occupied, the Owner, prior to occupancy of that building, shall secure permanent property insurance on the building to be occupied and necessary permits which may be required for use and occupancy.

§ 9.9.2 With the exception of clause 9.9.1.5, use and occupancy by the Owner prior to Project acceptance does not relieve the Design-Builder of the responsibility to maintain all insurance and bonds required of the Design-Builder under the Contract Documents until the Project is completed and accepted by the Owner. Immediately prior to such partial occupancy or use, the Owner and Design-Builder shall jointly inspect the area to be occupied or portion of the Work to be used in order to determine and record the condition of the Work.

§ 9.9.3 Unless otherwise agreed upon, partial occupancy or use of a portion or portions of the Work shall not constitute acceptance of Work not complying with the requirements of the Design-Build Documents.

§ 9.10 Final Completion and Final Payment

§ 9.10.1 Upon receipt of written notice that the Work is ready for final inspection and acceptance and upon receipt of a final Application for Payment, the Owner, Owner's Independent Inspector and Agency representative shall promptly make such inspection and, and when the Owner finds the Work acceptable under the Design-Build documents and fully performed, the Owner with Agency concurrence shall, subject to Section A.9.10.2, promptly make final payment to the Design-Builder.

§ 9.10.2 Neither final payment nor any remaining retained percentage shall become due until the Design-Builder submits to the Owner (1) an affidavit that payrolls, bills for materials and equipment, and other indebtedness connected with the Work, for which the Owner or the Owner's property might be responsible or encumbered, (less amounts withheld by Owner) have been paid or otherwise satisfied, (2) a certificate evidencing that insurance required by the Design-Build Documents to remain in force after final payment is currently in effect, (3) a written statement that the Design-Builder knows of no substantial reason that the insurance will not be renewable to cover the period required by the Design-Build Documents, (4) consent of surety, if any, to final payment, (5) as-constructed record copy of the Construction Documents marked to indicate field changes and selections made during construction, (6) manufacturer's warranties, product data, and maintenance and operations manuals, and (7) if required by the Owner, other data establishing payment or satisfaction of obligations, such as receipts, or releases and waivers of liens, claims, security interests, or encumbrances, arising out of the Contract, to the extent and in such form as may be designated by the Owner.

§ 9.10.3 If, after Substantial Completion of the Work, final completion thereof is materially delayed through no fault of the Design-Builder or by issuance of Change Orders affecting final completion, the Owner shall, upon application by the Design-Builder, and without terminating the Contract, make payment of the balance due for that portion of the Work fully completed and accepted. If the remaining balance for Work not fully completed or corrected is less than retainage stipulated in the Design-Build Documents, and if bonds have been furnished, the written consent of surety to payment of the balance due for that portion of the Work fully completed and accepted shall be submitted by the Design-Builder to the Owner prior to issuance of payment. Such payment shall be made under terms and conditions governing final payment, except that it shall not constitute a waiver of claims.

§ 9.10.4 The making of final payment shall constitute a waiver of Claims by the Owner except those arising from

- .1 liens, Claims, security interests or encumbrances arising out of the Contract and unsettled;
- .2 failure of the Work to comply with the requirements of the Design-Build Documents; or
- .3 terms of special warranties required by the Design-Build Documents.

AIA Document A141™ – 2014. Copyright © 2004 and 2014 by The American Institute of Architects. All rights reserved. The "American Institute of Architects," "AIA," the AIA Logo, and "AIA Contract Documents" are registered trademarks and may not be used without permission. This document was produced by AIA software at 17:24:06 ET on 04/01/2022 under Order No.2114285436 which expires on 02/22/2023, is not for resale, is licensed for one-time use only, and may only be used in accordance with the AIA Contract Documents® Terms of Service. To report copyright violations, e-mail copyright@aia.org.
User Notes: (913200243)

§ 9.10.5 Acceptance of final payment by the Design-Builder shall constitute a waiver of claims by the Design-Builder except those previously made in writing and identified by the Design-Builder as unsettled at the time of final Application for Payment.

ARTICLE 10 PROTECTION OF PERSONS AND PROPERTY

§ 10.1 Safety Precautions and Programs

The Design-Builder shall be responsible for initiating, maintaining and supervising all safety precautions and programs in connection with the performance of the Contract.

§ 10.2 Safety of Persons and Property

§ 10.2.1 The Design-Builder shall be responsible for precautions for the safety of, and reasonable protection to prevent damage, injury or loss to

.1 employees on the Work and other persons who may be affected thereby;

.2 the Work and materials and equipment to be incorporated therein, whether in storage on or off the site, under care, custody or control of the Design-Builder or the Architect, Consultants, or Subcontractors, or other person or entity providing services or work for the Design-Builder; and

.3 other property at the site or adjacent thereto, such as trees, shrubs, lawns, walks, pavements, roadways, or structures and utilities not designated for removal, relocation or replacement in the course of construction.

§ 10.2.2 The Design-Builder shall comply with, and give notices required by, applicable laws, statutes, ordinances, codes, rules and regulations, and lawful orders of public authorities, bearing on safety of persons or property, or their protection from damage, injury or loss.

§ 10.2.3 The Design-Builder shall implement, erect, and maintain, as required by existing conditions and performance of the Contract, reasonable safeguards for safety and protection, including posting danger signs and other warnings against hazards, promulgating safety regulations, and notify owners and users of adjacent sites and utilities of the safeguards and protections.

§ 10.2.4 When use or storage of explosives or other hazardous materials or equipment, or unusual methods, are necessary for execution of the Work, the Design-Builder shall exercise utmost care, and carry on such activities under supervision of properly qualified personnel.

§ 10.2.5 The Design-Builder shall promptly remedy damage and loss (other than damage or loss insured under property insurance required by the Design-Build Documents) to property referred to in Sections 10.2.1.2 and 10.2.1.3, caused in whole or in part by the Design-Builder, the Architect, a Consultant, a Contractor, or anyone directly or indirectly employed by any of them, or by anyone for whose acts they may be liable and for which the Design-Builder is responsible under Sections 10.2.1.2 and 10.2.1.3; except damage or loss attributable to acts or omissions of the Owner, or anyone directly or indirectly employed by the Owner, or by anyone for whose acts the Owner may be liable, and not attributable to the fault or negligence of the Design-Builder. The foregoing obligations of the Design-Builder are in addition to the Design-Builder's obligations under Section 3.1.14.

§ 10.2.6 The Design-Builder shall designate a responsible member of the Design-Builder's organization, at the site, whose duty shall be the prevention of accidents. This person shall be the Design-Builder's superintendent unless otherwise designated by the Design-Builder in writing to the Owner.

§ 10.2.7 The Design-Builder shall not permit any part of the construction or site to be loaded so as to cause damage or create an unsafe condition.

§ 10.2.8 **Injury or Damage to Person or Property.** If the Owner or Design-Builder suffers injury or damage to person or property because of an act or omission of the other, or of others for whose acts such party is legally responsible, written notice of the injury or damage, whether or not insured, shall be given to the other party within a reasonable time not exceeding 21 days after discovery. The notice shall provide sufficient detail to enable the other party to investigate the matter.

§ 10.3 Hazardous Materials

§ 10.3.1 The Design-Builder is responsible for compliance with any requirements included in the Design-Build Documents regarding hazardous materials. If the Design-Builder encounters a hazardous material or substance not addressed in the Design-Build Documents and if reasonable precautions will be inadequate to prevent foreseeable bodily injury or death to

Init. /

AIA Document A141™ – 2014. Copyright © 2004 and 2014 by The American Institute of Architects. All rights reserved. The "American Institute of Architects," "AIA," the AIA Logo, and "AIA Contract Documents" are registered trademarks and may not be used without permission. This document was produced by AIA software at 17:24:06 ET on 04/01/2022 under Order No.2114285436 which expires on 02/22/2023, is not for resale, is licensed for one-time use only, and may only be used in accordance with the AIA Contract Documents® Terms of Service. To report copyright violations, e-mail copyright@aia.org.
User Notes: (913200243)

persons resulting from a material or substance, including but not limited to asbestos or polychlorinated biphenyl (PCB), encountered on the site by the Design-Builder, the Design-Builder shall, upon recognizing the condition, immediately stop Work in the affected area and report the condition to the Owner in writing.

§ 10.3.2 Upon receipt of the Design-Builder's written notice, the Owner shall obtain the services of a licensed laboratory to verify the presence or absence of the material or substance reported by the Design-Builder and, in the event such material or substance is found to be present, to cause it to be rendered harmless. Unless otherwise required by the Design-Build Documents, the Owner shall furnish in writing to the Design-Builder the names and qualifications of persons or entities who are to perform tests verifying the presence or absence of such material or substance or who are to perform the task of removal or safe containment of such material or substance. The Design-Builder will promptly reply to the Owner in writing stating whether or not the Design-Builder has reasonable objection to the persons or entities proposed by the Owner. If the Design-Builder has an objection to a person or entity proposed by the Owner, the Owner shall propose another to whom the Design-Builder has no reasonable objection. When the material or substance has been rendered harmless, Work in the affected area shall resume upon written agreement of the Owner and Design-Builder. By Change Order, the Contract Time shall be extended appropriately and the Contract Sum shall be increased in the amount of the Design-Builder's reasonable additional costs of shut-down, delay and start-up.

§ 10.3.3 To the fullest extent permitted by law, the Owner shall indemnify and hold harmless the Design-Builder, the Architect, Consultants, and Subcontractors, and employees of any of them, from and against claims, damages, losses and expenses, including but not limited to attorneys' fees, arising out of or resulting from performance of the Work in the affected area, if in fact the material or substance presents the risk of bodily injury or death as described in Section 10.3.1 and has not been rendered harmless, provided that such claim, damage, loss or expense is attributable to bodily injury, sickness, disease or death, or to injury to, or destruction of, tangible property (other than the Work itself), except to the extent that such damage, loss or expense is due to the fault or negligence of the party seeking indemnity.

§ 10.3.4 The Owner shall not be responsible under this Section 10.3 for materials or substances the Design-Builder brings to the site unless such materials or substances are required by the Owner's Criteria. The Owner shall be responsible for materials or substances required by the Owner's Criteria, except to the extent of the Design-Builder's fault or negligence in the use and handling of such materials or substances.

§ 10.3.5 The Design-Builder shall indemnify the Owner for the cost and expense the Owner incurs (1) for remediation of a material or substance the Design-Builder brings to the site and negligently handles, or (2) where the Design-Builder fails to perform its obligations under Section 10.3.1, except to the extent that the cost and expense are due to the Owner's fault or negligence.

§ 10.3.6 If, without negligence on the part of the Design-Builder, the Design-Builder is held liable by a government agency for the cost of remediation of a hazardous material or substance solely by reason of performing Work as required by the Design-Build Documents, the Owner shall indemnify the Design-Builder for all cost and expense thereby incurred.

§ 10.4 Emergencies

In an emergency affecting safety of persons or property, the Design-Builder shall act, at the Design-Builder's discretion, to prevent threatened damage, injury or loss.

ARTICLE 11 UNCOVERING AND CORRECTION OF WORK

§ 11.1 Uncovering of Work

The Owner may request to examine a portion of the Work that the Design-Builder has covered to determine if the Work has been performed in accordance with the Design-Build Documents. If such Work is in accordance with the Design-Build Documents, the Owner and Design-Builder shall execute a Change Order to adjust the Contract Time and Contract Sum, as appropriate. If such Work is not in accordance with the Design-Build Documents, the costs of uncovering and correcting the Work shall be at the Design-Builder's expense and the Design-Builder shall not be entitled to a change in the Contract Time unless the condition was caused by the Owner or a separate contractor in which event the Owner shall be responsible for payment of such costs and the Contract Time will be adjusted as appropriate.

§ 11.2 Correction of Work

§ 11.2.1 Before or After Substantial Completion. The Design-Builder shall promptly correct Work rejected by the Owner or failing to conform to the requirements of the Design-Build Documents, whether discovered before or after Substantial

Init.
/
AIA Document A141™ – 2014. Copyright © 2004 and 2014 by The American Institute of Architects. All rights reserved. The "American Institute of Architects," "AIA," the AIA Logo, and "AIA Contract Documents" are registered trademarks and may not be used without permission. This document was produced by AIA software at 17:24:06 ET on 04/01/2022 under Order No.2114285436 which expires on 02/22/2023, is not for resale, is licensed for one-time use only, and may only be used in accordance with the AIA Contract Documents® Terms of Service. To report copyright violations, e-mail copyright@aia.org.
User Notes: (913200243)

Completion and whether or not fabricated, installed or completed. Costs of correcting such rejected Work, including additional testing and inspections, the cost of uncovering and replacement, and compensation for any design consultant employed by the Owner whose expenses and compensation were made necessary thereby, shall be at the Design-Builder's expense.

§ 11.2.2 After Substantial Completion

§ 11.2.2.1 In addition to the Design-Builder's obligations under Section 3.1.12, if, within one year after the date of Substantial Completion of the Work or designated portion thereof or after the date for commencement of warranties established under Section 9.9.1, or by terms of an applicable special warranty required by the Design-Build Documents, any of the Work is found not to be in accordance with the requirements of the Design-Build Documents, the Design-Builder shall correct it promptly after receipt of written notice from the Owner to do so unless the Owner has previously given the Design-Builder a written acceptance of such condition. The Owner shall give such notice promptly after discovery of the condition. During the one-year period for correction of the Work, if the Owner fails to notify the Design-Builder and give the Design-Builder an opportunity to make the correction, the Owner waives the rights to require correction by the Design-Builder and to make a claim for breach of warranty. If the Design-Builder fails to correct nonconforming Work within a reasonable time during that period after receipt of notice from the Owner, the Owner may correct it in accordance with Section 7.9.

§ 11.2.2.2 The one-year period for correction of Work shall be extended with respect to portions of Work first performed after Substantial Completion by the period of time between Substantial Completion and the actual completion of that portion of the Work.

§ 11.2.2.3 The one-year period for correction of Work shall not be extended by corrective Work performed by the Design-Builder pursuant to this Section 11.2.

§ 11.2.3 The Design-Builder shall remove from the site portions of the Work that are not in accordance with the requirements of the Design-Build Documents and are neither corrected by the Design-Builder nor accepted by the Owner.

§ 11.2.4 The Design-Builder shall bear the cost of correcting destroyed or damaged construction of the Owner or separate contractors, whether completed or partially completed, caused by the Design-Builder's correction or removal of Work that is not in accordance with the requirements of the Design-Build Documents.

§ 11.2.5 Nothing contained in this Section 11.2 shall be construed to establish a period of limitation with respect to other obligations the Design-Builder has under the Design-Build Documents. Establishment of the one-year period for correction of Work as described in Section 11.2.2 relates only to the specific obligation of the Design-Builder to correct the Work, and has no relationship to the time within which the obligation to comply with the Design-Build Documents may be sought to be enforced, nor to the time within which proceedings may be commenced to establish the Design-Builder's liability with respect to the Design-Builder's obligations other than specifically to correct the Work.

§ 11.3 Acceptance of Nonconforming Work

If the Owner prefers to accept Work that is not in accordance with the requirements of the Design-Build Documents, the Owner may do so instead of requiring its removal and correction, in which case the Contract Sum will be reduced as appropriate and equitable. Such adjustment shall be effected whether or not final payment has been made.

ARTICLE 12 COPYRIGHTS AND LICENSES

§ 12.1 Drawings, specifications, and other documents furnished by the Design-Builder, including those in electronic form, are Instruments of Service. The Design-Builder, and the Architect, Consultants, Subcontractors, and any other person or entity providing services or work for any of them, shall be deemed the authors and owners of their respective Instruments of Service, including the Drawings and Specifications, and shall retain all common law, statutory and other reserved rights, including copyrights. Submission or distribution of Instruments of Service to meet official regulatory requirements, or for similar purposes in connection with the Project, is not to be construed as publication in derogation of the reserved rights of the Design-Builder and the Architect, Consultants, and Subcontractors, and any other person or entity providing services or work for any of them.

§ 12.2 The Design-Builder and the Owner warrant that in transmitting Instruments of Service, or any other information, the transmitting party is the copyright owner of such information or has permission from the copyright owner to transmit such information for its use on the Project.

Init.
/
AIA Document A141™ – 2014. Copyright © 2004 and 2014 by The American Institute of Architects. All rights reserved. The "American Institute of Architects," "AIA," the AIA Logo, and "AIA Contract Documents" are registered trademarks and may not be used without permission. This document was produced by AIA software at 17:24:06 ET on 04/01/2022 under Order No.2114285436 which expires on 02/22/2023, is not for resale, is licensed for one-time use only, and may only be used in accordance with the AIA Contract Documents® Terms of Service. To report copyright violations, e-mail copyright@aia.org.
User Notes: (913200243)

§ 12.3 Upon execution of the Agreement, the Design-Builder grants to the Owner a limited, irrevocable and non-exclusive license to use the Instruments of Service solely and exclusively for purposes of constructing, using, maintaining, altering and adding to the Project, provided that the Owner substantially performs its obligations, including prompt payment of all sums when due, under the Design-Build Documents. The license granted under this section permits the Owner to authorize its consultants and separate contractors to reproduce applicable portions of the Instruments of Service solely and exclusively for use in performing services or construction for the Project. If the Design-Builder rightfully terminates this Agreement for cause as provided in Section 13.1.4 or 13.2.1 the license granted in this Section 12.3 shall terminate.

§ 12.3.1 The Design-Builder shall obtain non-exclusive licenses from the Architect, Consultants, and Subcontractors, that will allow the Design-Builder to satisfy its obligations to the Owner under this Article 12. The Design-Builder's licenses from the Architect and its Consultants and Subcontractors shall also allow the Owner, in the event this Agreement is terminated for any reason other than the default of the Owner or in the event the Design-Builder's Architect, Consultants, or Subcontractors terminate their agreements with the Design-Builder for cause, to obtain a limited, irrevocable and non-exclusive license solely and exclusively for purposes of constructing, using, maintaining, altering and adding to the Project, provided that the Owner (1) agrees to pay to the Architect, Consultant or Contractor all amounts due, and (2) provide the Architect, Consultant or Contractor with the Owner's written agreement to indemnify and hold harmless the Architect, Consultant or Contractor from all costs and expenses, including the cost of defense, related to claims and causes of action asserted by any third person or entity to the extent such costs and expenses arise from the Owner's alteration or use of the Instruments of Service.

§ 12.3.2 In the event the Owner alters the Instruments of Service without the author's written authorization or uses the Instruments of Service without retaining the authors of the Instruments of Service, the Owner releases the Design-Builder, Architect, Consultants, Subcontractors and any other person or entity providing services or work for any of them, from all claims and causes of action arising from or related to such uses. The Owner, to the extent permitted by law, further agrees to indemnify and hold harmless the Design-Builder, Architect, Consultants, Subcontractors and any other person or entity providing services or work for any of them, from all costs and expenses, including the cost of defense, related to claims and causes of action asserted by any third person or entity to the extent such costs and expenses arise from the Owner's alteration or use of the Instruments of Service under this Section 12.3.2. The terms of this Section 12.3.2 shall not apply if the Owner rightfully terminates this Agreement for cause under Sections 13.1.4 or 13.2.2.

ARTICLE 13 TERMINATION OR SUSPENSION

§ 13.1 Termination or Suspension Prior to Execution of the Design-Build Amendment

§ 13.1.1 If the Owner fails to make payments to the Design-Builder for Work prior to execution of the Design-Build Amendment in accordance with this Agreement, such failure shall be considered substantial nonperformance and cause for termination or, at the Design-Builder's option, cause for suspension of performance of services under this Agreement. If the Design-Builder elects to suspend the Work, the Design-Builder shall give seven days' written notice to the Owner before suspending the Work. In the event of a suspension of the Work, the Design-Builder shall have no liability to the Owner for delay or damage caused by the suspension of the Work. Before resuming the Work, the Design-Builder shall be paid all sums due prior to suspension and any expenses incurred in the interruption and resumption of the Design-Builder's Work. The Design-Builder's compensation for, and time to complete, the remaining Work shall be equitably adjusted.

§ 13.1.2 If the Owner suspends the Project, the Design-Builder shall be compensated for the Work performed prior to notice of such suspension. When the Project is resumed, the Design-Builder shall be compensated for expenses incurred in the interruption and resumption of the Design-Builder's Work. The Design-Builder's compensation for, and time to complete, the remaining Work shall be equitably adjusted.

§ 13.1.3 If the Owner suspends the Project for more than 90 cumulative days for reasons other than the fault of the Design-Builder, the Design-Builder may terminate this Agreement by giving not less than seven days' written notice.

§ 13.1.4 Either party may terminate this Agreement upon not less than seven days' written notice should the other party fail substantially to perform in accordance with the terms of this Agreement through no fault of the party initiating the termination.

§ 13.1.5 The Owner may terminate this Agreement upon not less than seven days' written notice to the Design-Builder for the Owner's convenience and without cause.

AIA Document A141™ – 2014. Copyright © 2004 and 2014 by The American Institute of Architects. All rights reserved. The "American Institute of Architects," "AIA," the AIA Logo, and "AIA Contract Documents" are registered trademarks and may not be used without permission. This document was produced by AIA software at 17:24:06 ET on 04/01/2022 under Order No.2114285436 which expires on 02/22/2023, is not for resale, is licensed for one-time use only, and may only be used in accordance with the AIA Contract Documents® Terms of Service. To report copyright violations, e-mail copyright@aia.org.
User Notes: (913200243)

§ 13.1.6 In the event of termination not the fault of the Design-Builder, the Design-Builder shall be compensated for Work performed prior to termination, together with Reimbursable Expenses then due and any other expenses directly attributable to termination for which the Design-Builder is not otherwise compensated. In no event shall the Design-Builder's compensation under this Section 13.1.6 be greater than the compensation set forth in Section 2.1.

§ 13.2 Termination or Suspension Following Execution of the Design-Build Amendment

§ 13.2.1 Termination by the Design-Builder

§ 13.2.1.1 The Design-Builder may terminate the Contract if the Work is stopped for a period of 30 consecutive days through no act or fault of the Design-Builder, the Architect, a Consultant, or a Contractor, or their agents or employees, or any other persons or entities performing portions of the Work under direct or indirect contract with the Design-Builder, for any of the following reasons:

.1 Issuance of an order of a court or other public authority having jurisdiction that requires all Work to be stopped;

.2 An act of government, such as a declaration of national emergency that requires all Work to be stopped;

.3 Because the Owner has not issued a Certificate for Payment and has not notified the Design-Builder of the reason for withholding certification as provided in Section 9.5.1, or because the Owner has not made payment on a Certificate for Payment within the time stated in the Design-Build Documents; or

.4 The Owner has failed to furnish to the Design-Builder promptly, upon the Design-Builder's request, reasonable evidence as required by Section 7.2.7.

§ 13.2.1.2 The Design-Builder may terminate the Contract if, through no act or fault of the Design-Builder, the Architect, a Consultant, a Contractor, or their agents or employees or any other persons or entities performing portions of the Work under direct or indirect contract with the Design-Builder, repeated suspensions, delays or interruptions of the entire Work by the Owner as described in Section 13.2.3 constitute in the aggregate more than 100 percent of the total number of days scheduled for completion, or 120 days in any 365-day period, whichever is less.

§ 13.2.1.3 If one of the reasons described in Section 13.2.1.1 or 13.2.1.2 exists, the Design-Builder may, upon seven days' written notice to the Owner, terminate the Contract and recover from the Owner payment for Work executed, including reasonable overhead and profit, costs incurred by reason of such termination, and damages.

§ 13.2.1.4 If the Work is stopped for a period of 60 consecutive days through no act or fault of the Design-Builder or any other persons or entities performing portions of the Work under contract with the Design-Builder because the Owner has repeatedly failed to fulfill the Owner's obligations under the Design-Build Documents with respect to matters important to the progress of the Work, the Design-Builder may, upon seven additional days' written notice to the Owner, terminate the Contract and recover from the Owner as provided in Section 13.2.1.3.

§ 13.2.2 Termination by the Owner For Cause

§ 13.2.2.1 The Owner may terminate the Contract if the Design-Builder

.1 fails to submit the Proposal by the date required by this Agreement, or if no date is indicated, within a reasonable time consistent with the date of Substantial Completion;

.2 repeatedly refuses or fails to supply an Architect, or enough properly skilled Consultants, Subcontractors, or workers or proper materials;

.3 fails to make payment to the Architect, Consultants, or Subcontractors for services, materials or labor in accordance with their respective agreements with the Design-Builder;

.4 repeatedly disregards applicable laws, statutes, ordinances, codes, rules and regulations, or lawful orders of a public authority; or

.5 is otherwise guilty of substantial breach of a provision of the Design-Build Documents.

§ 13.2.2.2 When any of the above reasons exist, the Owner may without prejudice to any other rights or remedies of the Owner and after giving the Design-Builder and the Design-Builder's surety, if any, seven days' written notice, terminate employment of the Design-Builder and may, subject to any prior rights of the surety:

.1 Exclude the Design-Builder from the site and take possession of all materials, equipment, tools, and construction equipment and machinery thereon owned by the Design-Builder;

.2 Accept assignment of the Architect, Consultant and Contractor agreements pursuant to Section 3.1.15; and

.3 Finish the Work by whatever reasonable method the Owner may deem expedient. Upon written request of the Design-Builder, the Owner shall furnish to the Design-Builder a detailed accounting of the costs incurred by the Owner in finishing the Work.

AIA Document A141™ – 2014. Copyright © 2004 and 2014 by The American Institute of Architects. All rights reserved. The "American Institute of Architects," "AIA," the AIA Logo, and "AIA Contract Documents" are registered trademarks and may not be used without permission. This document was produced by AIA software at 17:24:06 ET on 04/01/2022 under Order No.2114285436 which expires on 02/22/2023, is not for resale, is licensed for one-time use only, and may only be used in accordance with the AIA Contract Documents® Terms of Service. To report copyright violations, e-mail copyright@aia.org.
User Notes: (913200243)

§ 13.2.2.3 When the Owner terminates the Contract for one of the reasons stated in Section 13.2.2.1, the Design-Builder shall not be entitled to receive further payment until the Work is finished.

§ 13.2.2.4 If the unpaid balance of the Contract Sum exceeds costs of finishing the Work and other damages incurred by the Owner and not expressly waived, such excess shall be paid to the Design-Builder. If such costs and damages exceed the unpaid balance, the Design-Builder shall pay the difference to the Owner. The obligation for such payments shall survive termination of the Contract.

§ 13.2.3 Suspension by the Owner for Convenience

§ 13.2.3.1 The Owner may, without cause, order the Design-Builder in writing to suspend, delay or interrupt the Work in whole or in part for such period of time as the Owner may determine.

§ 13.2.3.2 The Contract Sum and Contract Time shall be adjusted for increases in the cost and time caused by suspension, delay or interruption as described in Section 13.2.3.1. Adjustment of the Contract Sum shall include profit. No adjustment shall be made to the extent

.1 that performance is, was or would have been so suspended, delayed or interrupted by another cause for which the Design-Builder is responsible; or

.2 that an equitable adjustment is made or denied under another provision of the Contract.

§ 13.2.4 Termination by the Owner for Convenience

§ 13.2.4.1 The Owner may, at any time, terminate the Contract for the Owner's convenience and without cause.

§ 13.2.4.2 Upon receipt of written notice from the Owner of such termination for the Owner's convenience, the Design-Builder shall

.1 cease operations as directed by the Owner in the notice;

.2 take actions necessary, or that the Owner may direct, for the protection and preservation of the Work; and,

.3 except for Work directed to be performed prior to the effective date of termination stated in the notice, terminate all existing Project agreements, including agreements with the Architect, Consultants, Subcontractors, and purchase orders, and enter into no further Project agreements and purchase orders.

§ 13.2.4.3 In case of such termination for the Owner's convenience, the Design-Builder shall be entitled to receive payment for Work executed, and costs incurred by reason of such termination, along with reasonable overhead and profit on the Work not executed.

ARTICLE 14 CLAIMS AND DISPUTE RESOLUTION

§ 14.1 Claims

§ 14.1.1 Definition. A Claim is a demand or assertion by one of the parties seeking, as a matter of right, payment of money, or other relief with respect to the terms of the Contract. The term "Claim" also includes other disputes and matters in question between the Owner and Design-Builder arising out of or relating to the Contract. The responsibility to substantiate Claims shall rest with the party making the Claim.

§ 14.1.2 Time Limits on Claims. The Owner and Design-Builder shall commence all claims and causes of action, whether in contract, tort, breach of warranty or otherwise, against the other, arising out of or related to the Contract in accordance with the requirements of the binding dispute resolution method selected in Section 1.3, within the time period specified by applicable law, but in any case not more than 10 years after the date of Substantial Completion of the Work. The Owner and Design-Builder waive all claims and causes of action not commenced in accordance with this Section 14.1.2.

§ 14.1.3 Notice of Claims

§ 14.1.3.1 Prior To Final Payment. Prior to Final Payment, Claims by either the Owner or Design-Builder must be initiated by written notice to the other party within 21 days after occurrence of the event giving rise to such Claim or within 21 days after the claimant first recognizes the condition giving rise to the Claim, whichever is later.

§ 14.1.3.2 Claims Arising After Final Payment. After Final Payment, Claims by either the Owner or Design-Builder that have not otherwise been waived pursuant to Sections 9.10.4 or 9.10.5, must be initiated by prompt written notice to the other party. The

AIA Document A141™ – 2014. Copyright © 2004 and 2014 by The American Institute of Architects. All rights reserved. The "American Institute of Architects," "AIA," the AIA Logo, and "AIA Contract Documents" are registered trademarks and may not be used without permission. This document was produced by AIA software at 17:24:06 ET on 04/01/2022 under Order No.2114285436 which expires on 02/22/2023, is not for resale, is licensed for one-time use only, and may only be used in accordance with the AIA Contract Documents® Terms of Service. To report copyright violations, e-mail copyright@aia.org.
User Notes: (913200243)

notice requirement in Section 14.1.3.1 and the Initial Decision requirement as a condition precedent to mediation in Section 14.2.1 shall not apply.

§ 14.1.4 Continuing Contract Performance. Pending final resolution of a Claim, except as otherwise agreed in writing or as provided in Section 9.7 and Article 13, the Design-Builder shall proceed diligently with performance of the Contract and the Owner shall continue to make payments in accordance with the Design-Build Documents.

§ 14.1.5 Claims for Additional Cost. If the Design-Builder intends to make a Claim for an increase in the Contract Sum, written notice as provided herein shall be given before proceeding to execute the portion of the Work that relates to the Claim. Prior notice is not required for Claims relating to an emergency endangering life or property arising under Section 10.4.

§ 14.1.6 Claims for Additional Time

§ 14.1.6.1 If the Design-Builder intends to make a Claim for an increase in the Contract Time, written notice as provided herein shall be given. The Design-Builder's Claim shall include an estimate of cost and of probable effect of delay on progress of the Work. In the case of a continuing delay, only one Claim is necessary.

§ 14.1.6.2 If adverse weather conditions are the basis for a Claim for additional time, such Claim shall be documented by data substantiating that weather conditions were abnormal for the period of time, could not have been reasonably anticipated, and had an adverse effect on the scheduled construction.

§ 14.1.7 Claims for Consequential Damages

The Design-Builder and Owner waive Claims against each other for consequential damages arising out of or relating to this Contract. This mutual waiver includes

.1 damages incurred by the Owner for rental expenses, for losses of use, income, profit, financing, business and reputation, and for loss of management or employee productivity or of the services of such persons; and

.2 damages incurred by the Design-Builder for principal office expenses including the compensation of personnel stationed there, for losses of financing, business and reputation, and for loss of profit except anticipated profit arising directly from the Work.

This mutual waiver is applicable, without limitation, to all consequential damages due to either party's termination in accordance with Article 13. Nothing contained in this Section 14.1.7 shall be deemed to preclude an award of liquidated damages, when applicable, in accordance with the requirements of the Design-Build Documents.

§ 14.2 Initial Decision

§ 14.2.1 An initial decision shall be required as a condition precedent to mediation of all Claims between the Owner and Design-Builder initiated prior to the date final payment is due, excluding those arising under Sections 10.3 and 10.4 of the Agreement and Sections B.3.2.9 and B.3.2.10 of Exhibit B to this Agreement, unless 30 days have passed after the Claim has been initiated with no decision having been rendered. Unless otherwise mutually agreed in writing, the Owner shall render the initial decision on Claims.

§ 14.2.2 Procedure

§ 14.2.2.1 Claims Initiated by the Owner. If the Owner initiates a Claim, the Design-Builder shall provide a written response to Owner within ten days after receipt of the notice required under Section 14.1.3.1. Thereafter, the Owner shall render an initial decision within ten days of receiving the Design-Builder's response: (1) withdrawing the Claim in whole or in part, (2) approving the Claim in whole or in part, or (3) suggesting a compromise.

§ 14.2.2.2 Claims Initiated by the Design-Builder. If the Design-Builder initiates a Claim, the Owner will take one or more of the following actions within ten days after receipt of the notice required under Section 14.1.3.1: (1) request additional supporting data, (2) render an initial decision rejecting the Claim in whole or in part, (3) render an initial decision approving the Claim, (4) suggest a compromise or (5) indicate that it is unable to render an initial decision because the Owner lacks sufficient information to evaluate the merits of the Claim.

§ 14.2.3 In evaluating Claims, the Owner may, but shall not be obligated to, consult with or seek information from persons with special knowledge or expertise who may assist the Owner in rendering a decision. The retention of such persons shall be at the Owner's expense.

AIA Document A141™ – 2014. Copyright © 2004 and 2014 by The American Institute of Architects. All rights reserved. The "American Institute of Architects," "AIA," the AIA Logo, and "AIA Contract Documents" are registered trademarks and may not be used without permission. This document was produced by AIA software at 17:24:06 ET on 04/01/2022 under Order No.2114285436 which expires on 02/22/2023, is not for resale, is licensed for one-time use only, and may only be used in accordance with the AIA Contract Documents® Terms of Service. To report copyright violations, e-mail copyright@aia.org.
User Notes: (913200243)

§ 14.2.4 If the Owner requests the Design-Builder to provide a response to a Claim or to furnish additional supporting data, the Design-Builder shall respond, within ten days after receipt of such request, and shall either (1) provide a response on the requested supporting data, (2) advise the Owner when the response or supporting data will be furnished or (3) advise the Owner that no supporting data will be furnished. Upon receipt of the response or supporting data, if any, the Owner will either reject or approve the Claim in whole or in part.

§ 14.2.5 The Owner's initial decision shall (1) be in writing; (2) state the reasons therefor; and (3) identify any change in the Contract Sum or Contract Time or both. The initial decision shall be final and binding on the parties but subject to mediation and, if the parties fail to resolve their dispute through mediation, to binding dispute resolution.

§ 14.2.6 Either party may file for mediation of an initial decision at any time, subject to the terms of Section 14.2.6.1.

§ 14.2.6.1 Either party may, within 30 days from the date of an initial decision, demand in writing that the other party file for mediation within 60 days of the initial decision. If such a demand is made and the party receiving the demand fails to file for mediation within the time required, then both parties waive their rights to mediate or pursue binding dispute resolution proceedings with respect to the initial decision.

§ 14.2.7 In the event of a Claim against the Design-Builder, the Owner may, but is not obligated to, notify the surety, if any, of the nature and amount of the Claim. If the Claim relates to a possibility of a Design-Builder's default, the Owner may, but is not obligated to, notify the surety and request the surety's assistance in resolving the controversy.

§ 14.2.8 If a Claim relates to or is the subject of a mechanic's lien, the party asserting such Claim may proceed in accordance with applicable law to comply with the lien notice or filing deadlines.

§ 14.3 Mediation

§ 14.3.1 Claims, disputes, or other matters in controversy arising out of or related to the Contract, except those waived as provided for in Sections 9.10.4, 9.10.5, and 14.1.7, shall be subject to mediation as a condition precedent to binding dispute resolution.

§ 14.3.2 The parties shall endeavor to resolve their Claims by mediation which, unless the parties mutually agree otherwise, shall be administered by the American Arbitration Association in accordance with its Construction Industry Mediation Procedures in effect on the date of the Agreement. A request for mediation shall be made in writing, delivered to the other party to the Contract, and filed with the person or entity administering the mediation. The request may be made concurrently with the filing of binding dispute resolution proceedings but, in such event, mediation shall proceed in advance of binding dispute resolution proceedings, which shall be stayed pending mediation for a period of 60 days from the date of filing, unless stayed for a longer period by agreement of the parties or court order. If an arbitration proceeding is stayed pursuant to this Section 14.3.2, the parties may nonetheless proceed to the selection of the arbitrator(s) and agree upon a schedule for later proceedings.

§ 14.3.3 The parties shall share the mediator's fee and any filing fees equally. The mediation shall be held in the place where the Project is located, unless another location is mutually agreed upon. Agreements reached in mediation shall be enforceable as settlement agreements in any court having jurisdiction.

§ 14.4 Arbitration

§ 14.4.1 If the parties have selected arbitration as the method for binding dispute resolution in Section 1.3, any Claim subject to, but not resolved by, mediation may be subject to arbitration which, unless the parties mutually agree otherwise, shall be administered by the American Arbitration Association in accordance with its Construction Industry Arbitration Rules in effect on the date of the Agreement. A demand for arbitration shall be made in writing, delivered to the other party to the Contract, and filed with the person or entity administering the arbitration. The party filing a notice of demand for arbitration must assert in the demand all Claims then known to that party on which arbitration is permitted to be demanded.

§ 14.4.1.1 The arbitration provisions in this subsection may be initiated by either party to this Contract by filing with the other party a written request for arbitration. The other party may accept or reject the request by filing a written answering statement with the requesting party within fourteen (14) calendar days of the receipt of such request. If the request is accepted the provisions of this section shall apply. If the request is rejected or an answering statement is not filed within the fourteen (14) day period, the provisions in this subsection will not apply.

Init.
/
AIA Document A141™ – 2014. Copyright © 2004 and 2014 by The American Institute of Architects. All rights reserved. The "American Institute of Architects," "AIA," the AIA Logo, and "AIA Contract Documents" are registered trademarks and may not be used without permission. This document was produced by AIA software at 17:24:06 ET on 04/01/2022 under Order No.2114285436 which expires on 02/22/2023, is not for resale, is licensed for one-time use only, and may only be used in accordance with the AIA Contract Documents® Terms of Service. To report copyright violations, e-mail copyright@aia.org.
User Notes:
(913200243)

§ 14.4.1.2 Within fourteen (14) calendar days or any mutually agreeable time period thereafter, each party to this Contract will appoint one arbitrator. Within fourteen (14) calendar days or any mutually agreeable time period thereafter, the two arbitrators will select a third arbitrator. Failure to appoint an arbitrator within the mutually agreeable time periods will terminate further actions under this subsection.

§ 14.4.1.3 The arbitrators will select a hearing location as close to the Owner's locale as possible.

§ 14.4.2 The award rendered by the arbitrator or arbitrators shall be final, and judgment may be entered upon it in accordance with applicable law in any court having jurisdiction.

§ 14.4.3 The foregoing agreement to arbitrate, and other agreements to arbitrate with an additional person or entity duly consented to by parties to the Agreement, shall be specifically enforceable under applicable law in any court having jurisdiction thereof.

§ 14.4.4 Consolidation or Joinder

§ 14.4.4.1 Either party, at its sole discretion, may consolidate an arbitration conducted under this Agreement with any other arbitration to which it is a party provided that (1) the arbitration agreement governing the other arbitration permits consolidation, (2) the arbitrations to be consolidated substantially involve common questions of law or fact, and (3) the arbitrations employ materially similar procedural rules and methods for selecting arbitrator(s).

§ 14.4.4.2 Either party, at its sole discretion, may include by joinder persons or entities substantially involved in a common question of law or fact whose presence is required if complete relief is to be accorded in arbitration, provided that the party sought to be joined consents in writing to such joinder. Consent to arbitration involving an additional person or entity shall not constitute consent to arbitration of any claim, dispute or other matter in question not described in the written consent.

§ 14.4.4.3 The Owner and Design-Builder grant to any person or entity made a party to an arbitration conducted under this Section 14.4, whether by joinder or consolidation, the same rights of joinder and consolidation as the Owner and Design-Builder under this Agreement.

ARTICLE 15 MISCELLANEOUS PROVISIONS

§ 15.1 Governing Law

The Contract shall be governed by the law of the place where the Project is located except that, if the parties have selected arbitration as the method of binding dispute resolution, the Federal Arbitration Act shall govern Section 14.4.

§ 15.2 Successors and Assigns

§ 15.2.1 The Owner and Design-Builder, respectively, bind themselves, their partners, successors, assigns and legal representatives to the covenants, agreements and obligations contained in the Design-Build Documents. Except as provided in Section 15.2.2, neither party to the Contract shall assign the Contract as a whole without written consent of the other. If either party attempts to make such an assignment without such consent, that party shall nevertheless remain legally responsible for all obligations under the Contract. This Agreement will not become effective until concurred with in writing by the Agency. Such concurrence shall be evidenced by the signature of a duly authorized representative of the Agency in the space provided at the end of this attachment to the Agreement. The concurrence so evidenced by the Agency shall in no way commit the Agency to render financial assistance to the Owner and is without liability to the Agency for payment hereunder.

But in the event such financial assistance is provided, the Agency concurrence shall signify the provisions of this Agreement are consistent with the requirements of the Agency.

§ 15.2.2 The Owner may, without consent of the Design-Builder, assign the Contract to a lender providing construction financing for the Project, if the lender assumes the Owner's rights and obligations under the Design-Build Documents. The Design-Builder shall execute all consents reasonably required to facilitate such assignment.

§ 15.2.3 If the Owner requests the Design-Builder, Architect, Consultants, or Subcontractors to execute certificates, other than those required by Section 3.1.10, the Owner shall submit the proposed language of such certificates for review at least 14 days prior to the requested dates of execution. If the Owner requests the Design-Builder, Architect, Consultants, or Subcontractors to execute consents reasonably required to facilitate assignment to a lender, the Design-Builder, Architect, Consultants, or

AIA Document A141™ – 2014. Copyright © 2004 and 2014 by The American Institute of Architects. All rights reserved. The "American Institute of Architects," "AIA," the AIA Logo, and "AIA Contract Documents" are registered trademarks and may not be used without permission. This document was produced by AIA software at 17:24:06 ET on 04/01/2022 under Order No.2114285436 which expires on 02/22/2023, is not for resale, is licensed for one-time use only, and may only be used in accordance with the AIA Contract Documents® Terms of Service. To report copyright violations, e-mail copyright@aia.org.
User Notes: (913200243)

Subcontractors shall execute all such consents that are consistent with this Agreement, provided the proposed consent is submitted to them for review at least 14 days prior to execution. The Design-Builder, Architect, Consultants, and Subcontractors shall not be required to execute certificates or consents that would require knowledge, services or responsibilities beyond the scope of their services.

§ 15.3 Written Notice

Written notice shall be deemed to have been duly served if delivered in person to the individual, to a member of the firm or entity, or to an officer of the corporation for which it was intended; or if delivered at, or sent by registered or certified mail or by courier service providing proof of delivery to, the last business address known to the party giving notice.

§ 15.4 Rights and Remedies

§ 15.4.1 Duties and obligations imposed by the Design-Build Documents, and rights and remedies available thereunder, shall be in addition to and not a limitation of duties, obligations, rights and remedies otherwise imposed or available by law.

§ 15.4.2 No action or failure to act by the Owner or Design-Builder shall constitute a waiver of a right or duty afforded them under the Contract, nor shall such action or failure to act constitute approval of or acquiescence in a breach thereunder, except as may be specifically agreed in writing.

§ 15.5 Tests and Inspections

§ 15.5.1 Tests, inspections and approvals of portions of the Work shall be made as required by the Design-Build Documents and by applicable laws, statutes, ordinances, codes, rules and regulations or lawful orders of public authorities. Unless otherwise provided, the Design-Builder shall make arrangements for such tests, inspections and approvals with an independent testing laboratory or entity acceptable to the Owner, or with the appropriate public authority, and shall bear all related costs of tests, inspections and approvals. The Design-Builder shall give the Owner timely notice of when and where tests and inspections are to be made so that the Owner may be present for such procedures. The Owner shall bear costs of (1) tests, inspections or approvals that do not become requirements until after bids are received or negotiations concluded, and (2) tests, inspections or approvals where building codes or applicable laws or regulations prohibit the Owner from delegating their cost to the Design-Builder.

§ 15.5.2 If the Owner determines that portions of the Work require additional testing, inspection or approval not included under Section 15.5.1, the Owner will instruct the Design-Builder to make arrangements for such additional testing, inspection or approval by an entity acceptable to the Owner, and the Design-Builder shall give timely notice to the Owner of when and where tests and inspections are to be made so that the Owner may be present for such procedures. Such costs, except as provided in Section 15.5.3, shall be at the Owner's expense.

§ 15.5.3 If such procedures for testing, inspection or approval under Sections 15.5.1 and 15.5.2 reveal failure of the portions of the Work to comply with requirements established by the Design-Build Documents, all costs made necessary by such failure shall be at the Design-Builder's expense.

§ 15.5.4 Required certificates of testing, inspection or approval shall, unless otherwise required by the Design-Build Documents, be secured by the Design-Builder and promptly delivered to the Owner.

§ 15.5.5 If the Owner is to observe tests, inspections or approvals required by the Design-Build Documents, the Owner will do so promptly and, where practicable, at the normal place of testing.

§ 15.5.6 Tests or inspections conducted pursuant to the Design-Build Documents shall be made promptly to avoid unreasonable delay in the Work. Wood-frame construction will have microbial growth present as milled wood is a natural, nutrient-rich product and it is not practical to eliminate naturally occurring microbial growth during construction. Contractor shall not be liable for natural microbial growth during the course of construction. If Owner decides to remediate naturally occurring microbial growth, Owner agrees to do so at Owner's own expense and any delay to Contractor as a result of same shall entitle Contractor to additional Contract Time and General Conditions.

§ 15.6 Confidential Information

If the Owner or Design-Builder transmits Confidential Information, the transmission of such Confidential Information constitutes a warranty to the party receiving such Confidential Information that the transmitting party is authorized to transmit

AIA Document A141™ – 2014. Copyright © 2004 and 2014 by The American Institute of Architects. All rights reserved. The "American Institute of Architects," "AIA," the AIA Logo, and "AIA Contract Documents" are registered trademarks and may not be used without permission. This document was produced by AIA software at 17:24:06 ET on 04/01/2022 under Order No.2114285436 which expires on 02/22/2023, is not for resale, is licensed for one-time use only, and may only be used in accordance with the AIA Contract Documents® Terms of Service. To report copyright violations, e-mail copyright@aia.org.
User Notes: (913200243)

the Confidential Information. If a party receives Confidential Information, the receiving party shall keep the Confidential Information strictly confidential and shall not disclose it to any other person or entity except as set forth in Section 15.6.1.

§ 15.6.1 A party receiving Confidential Information may disclose the Confidential Information as required by law or court order, including a subpoena or other form of compulsory legal process issued by a court or governmental entity. A party receiving Confidential Information may also disclose the Confidential Information to its employees, consultants or contractors in order to perform services or work solely and exclusively for the Project, provided those employees, consultants and contractors are subject to the restrictions on the disclosure and use of Confidential Information as set forth in this Contract.

§ 15.7 Capitalization

Terms capitalized in the Contract include those that are (1) specifically defined, (2) the titles of numbered articles or (3) the titles of other documents published by the American Institute of Architects.

§ 15.8 Interpretation

§ 15.8.1 In the interest of brevity the Design-Build Documents frequently omit modifying words such as "all" and "any" and articles such as "the" and "an," but the fact that a modifier or an article is absent from one statement and appears in another is not intended to affect the interpretation of either statement.

§ 15.8.2 Unless otherwise stated in the Design-Build Documents, words which have well-known technical or construction industry meanings are used in the Design-Build Documents in accordance with such recognized meanings.

§ 15.9 EQUAL OPPORTUNITY REQUIREMENTS – Non-discrimination in Employment by Federally Assisted Construction Contractors, by Executive Order 11246.

§ 15.9.1 This section summarized Executive Order 11246, as amended, which prohibits employment discrimination and requires employers holding non-exempt Federal contracts and subcontracts and federally-assisted construction contracts and subcontracts in excess of $10,000 to take affirmative action to ensure equal employment opportunity without regard to race, color, religion, sex, or national origin. The Executive Order requires, as a condition for the approval of any federally assisted construction contract, that the applicant incorporate nondiscrimination and affirmative action clauses into its non-exempt federally assisted construction contracts.

§ 15.9.2 Executive Order 11246, as amended, is administered and enforced by the Office of Federal Contract Compliance Programs (OFCCP), an agency in the U.S. Department of Labor's Employment Standards Administration. OFCCP has issued regulations at 41 CFR chapter 60 implementing the Executive Order. The regulations at 41 CFR part 60-4 establish the procedures which the Agency, as an administering agency, must follow when making grants, contracts, loans, insurance or guarantees involving federally assisted construction which is not exempt from the requirements of Executive Order 11246. The regulations which apply to Federal or federally assisted construction contractors also are published at 41 CFR part 60-4.

§ 15.9.3 OFCCP has established numerical goals for minority and female utilization in construction work. The goals are expressed in percentage terms for the contractor's aggregate workforce in each trade. OFCCP has set goals for minority utilization based on the percentage of minorities in the civilian labor force in the relevant area. There is a single nationwide goal of 6.9 percent for utilization for women. The goals to all construction work in the covered geographic area, whether or not it is federal, federally assisted or non-federal. A notice advises bidders of the applicable goals for the area where the project is to be located.

§ 15.9.4 Application. This section applies to all of a construction contractor's or subcontractor's employees who are engaged in on-site construction including those construction employees who work on a non-Federal or non-Federally assisted construction site.

§ 15.9.4.1 Agency officials will notify the appropriate Regional Director of OFCCP that an Agency financed construction contract has been awarded, and that the equal opportunity clauses are included in the contract documents.

§ 15.7.4.2 The Regional Director, OFCCP-DOL, will enforce the non-discrimination requirements of Executive Order 11246.

AIA Document A141™ – 2014. Copyright © 2004 and 2014 by The American Institute of Architects. All rights reserved. The "American Institute of Architects," "AIA," the AIA Logo, and "AIA Contract Documents" are registered trademarks and may not be used without permission. This document was produced by AIA software at 17:24:06 ET on 04/01/2022 under Order No.2114285436 which expires on 02/22/2023, is not for resale, is licensed for one-time use only, and may only be used in accordance with the AIA Contract Documents® Terms of Service. To report copyright violations, e-mail copyright@aia.org.
User Notes: (913200243)

§ 15.9.4.3 The prospective contractor or subcontractor must comply with the Immigration Reform and Control Act of 1986 by completing and retaining Form I-9, "Employment Eligibility Verification," for employees hired. This form is available from the Immigration and Naturalization Service, and Department of Justice.

§ 15.9.4.4 The prospective contractor or subcontractor must submit Form RD 400-6, "Compliance Statement," to the applicant and an Agency official as part of the bid package, prior to any contract bid negotiations and comply with the Executive Order 11246 as stated in the contract documents.

§ 15.10 STATUTES

§ 15.10.1 The Design-Builder and each subcontractor shall comply with the following statutes (and the regulations issued pursuant thereto, which are incorporated herein by reference):

§ 15.10.2 The Design-Builder agrees to abide by the requirements of 2 CFR part 417 and under Executive Order 12549, which pertains to the debarment or suspension of a person from participating in a Federal program or activity. If the total compensation exceeds $25,000, the Design-Builder shall complete the relevant certification form provided by the Owner.

§ 15.10.3 If applicable, the Design-Builder shall comply with Section 319 of Public Law 101-121, as supplemented by the Department of Agriculture regulations (2 CFR part 418and DR 2400-5). This Law pertains to restrictions on lobbying and applies to the recipients of Contracts and Subcontracts that exceed $100,000 at any tier under a Federal loan that exceeds $150,000 or a Federal grant that exceeds $100,000. If applicable, the Design-Builder must complete a certification form on lobbying activities related to a specific Federal loan or grant that is a funding for this Contract. The certification and disclosure forms shall be provided by the Owner.

§ 15.10.4 Copeland Anti-Kickback Act (18 U.S.C. 874) as supplemented in Department of Labor regulations (29 CFR part 3). This Act provides that each Contractor shall be prohibited from inducing, by any means, any person in connection with the construction to give up any part of the compensation to which the person is otherwise entitled.

§ 15.10.5 Clean Air Act (42 U.S.C. 7414), section 114, and the Water Pollution Control Act (33 U.S.C. 1813), section 308. Under Executive Order 11738 and Environmental Protection Agency (EPA) regulations 40 CFR part 15, all Contracts in excess of $100,000 are required to comply with these Acts. The Acts require the Contractor to:

§ 15.10.5.1 Notify the Owner of the receipt of any communication from EPA indicating that a facility to be utilized in the performance of the Contract is under consideration to be listed on the EPA list of Violating Facilities,

§ 15.10.5.2 Certify that any facility to be utilized in the work by any nonexempt contractor or subcontractor is not listed on the EPA list of Violating Facilities as of the date of the Contract Award.

§ 15.10.5.3 Include or cause to be included the above criteria and requirements of clauses A.13.3.5.1 and A.13.3.5.2 in every nonexempt Subcontract, and that the Contractor will take such actions as the Agency may direct as a means of enforcing such provisions.

§ 15.10.6 The Contractor shall be required to comply with Section 107 of the Contract Work Hours and Safety Standards Act (40 U.S.C. 333) entitle "Safety and Health Regulations for Construction" (29 CFR Part 1926) to the extent that any resulting Contract involves construction.

§ 15.11 ENVIRONMENTAL REQUIREMENTS

§ 15.11.1 Mitigation Measures – The Design-Builder shall comply with applicable mitigation measures established in the environmental assessment for the project. These may be obtained from the Agency representative.

§ 15.11.2 The Design-Builder, when constructing a Project involving trenching, excavating, or other earth moving activity, shall comply with the following environmental constraints:

§ 15.11.2.1 Endangered Species, Historic Preservation, Human Remains and Cultural Items, Hazardous Materials, and Paleontology – Any excavation or other earth moving activity by the Design-Builder that provides evidence of the presence of

AIA Document A141™ – 2014. Copyright © 2004 and 2014 by The American Institute of Architects. All rights reserved. The "American Institute of Architects," "AIA," the AIA Logo, and "AIA Contract Documents" are registered trademarks and may not be used without permission. This document was produced by AIA software at 17:24:06 ET on 04/01/2022 under Order No.2114285436 which expires on 02/22/2023, is not for resale, is licensed for one-time use only, and may only be used in accordance with the AIA Contract Documents® Terms of Service. To report copyright violations, e-mail copyright@aia.org.
User Notes: (913200243)

endangered or threatened species or their critical habitat, uncovers a historical or archaeological artifact, human remains or cultural items, hazardous materials, a fossil or other paleontological materials will require the Design-Builder to:

.1 Temporarily stop work;
.2 Provide immediate notice to the Architect and the Agency, and in the case of potentially hazardous materials, provide immediate notice to local first responders and take such measures as necessary to protect the public and workers;
.3 Take reasonable measures as necessary to protect the discovered materials or protected resource;
.4 Abide by such direction as provided by the Agency, or Agencies responsible for resource protection or hazardous materials management; and
.5 Resume work only upon notice from the Architect and the Agency.

§ 15.12 Compliance with all Federal, State, and local requirements effective on the contract execution date will be the responsibility of the Design-Builder.

15.13 RECORDS

§ 15.13.1 If the Contract is based on a negotiated Bid, the Owner, the United States Department of Agriculture, the Comptroller General of the United States, or any of their duly authorized representatives, shall have access to any books, documents, papers, and records of the Design-Builder which are directly pertinent to a specific Federal loan program for the purpose of making audit, examination, excerpts, and transcriptions. The Design-Builder shall maintain records for at least three years after the Owner makes final payment and all other pending matters are closed.

ARTICLE 16 SCOPE OF THE AGREEMENT

§ 16.1 This Agreement is comprised of the following documents listed below:

.1 AIA Document A141™–2014, Standard Form of Agreement Between Owner and Design-Builder
.2 AIA Document A141™–2014, Exhibit A.1, Preliminary Design Amendment Phase 1B, if executed
.3 AIA Document A141™–2014, Exhibit A, Design-Build Amendment, if executed
.4 AIA Document A141™–2014, Exhibit B, Insurance and Bonds
.5 , or the following:

Exhibit C, Design-Builder's Key Team Members Hourly Rates

.6 Other:

AIA Document A312™ – 2010, Performance Bond
AIA Document A312™ – 2010, Payment Bond
Compliance Statement (Form RD 400-6)
Certification Regarding Debarment, Suspension, Ineligibility and Voluntary Exclusion – Lower Tier Covered Transactions (Form AD 1048)
Disclosure of Lobbying Activities (SF-LLL)
Certification for Contracts, Grants and Loans (RD Instruction 1940-Q, Exhibit A-1)

AIA Document A141™ – 2014. Copyright © 2004 and 2014 by The American Institute of Architects. All rights reserved. The "American Institute of Architects," "AIA," the AIA Logo, and "AIA Contract Documents" are registered trademarks and may not be used without permission. This document was produced by AIA software at 17:24:06 ET on 04/01/2022 under Order No.2114285436 which expires on 02/22/2023, is not for resale, is licensed for one-time use only, and may only be used in accordance with the AIA Contract Documents® Terms of Service. To report copyright violations, e-mail copyright@aia.org.
User Notes: (913200243)

SIGNATURE BLOCK:

This Agreement entered into as of the day and year first written above and is executed in at least three original copies, of which one is to be delivered to the Design-Builder, one to the Owner and one to the Agency. Concurrence in the Contract by the Agency is required before the contract is effective.

OWNER:

ATTEST: _____ BY: _____

Print Name: Anna E. Bartlome Print Name: Daniel Corona

Title: City Clerk/Records Officer Title: Mayor

Date: April 21, 2022 Date: April 21, 2022

DESIGN-BUILDER:

ATTEST: _____ BY: _____

Print Name: Travis Coombs Print Name: Seth Maurer

Title: Vice President Title: President

Date: April 1st 2022 Date: April 1st 2022

Init. /

AIA Document A141™ – 2014. Copyright © 2004 and 2014 by The American Institute of Architects. All rights reserved. The "American Institute of Architects," "AIA," the AIA Logo, and "AIA Contract Documents" are registered trademarks and may not be used without permission. This document was produced by AIA software at 17:24:06 ET on 04/01/2022 under Order No.2114285436 which expires on 02/22/2023, is not for resale, is licensed for one-time use only, and may only be used in accordance with the AIA Contract Documents® Terms of Service. To report copyright violations, e-mail copyright@aia.org.
User Notes: (913200243)

OWNER'S ATTORNEY REVIEW:

I have examined this design/build contract and have received verification that the proper performance and payment bond(s) will be issued and executed thereof, and I am of the opinion that each of the aforesaid agreements are adequate and has been duly executed by the proper parties thereto acting through their duly authorized representatives; that said representatives have full power and authority to execute said agreements on behalf of the respective parties named thereon; and that the foregoing agreements constitute valid and legally binding obligations upon the parties executing the same in accordance with terms, conditions, and provisions thereof.

By: _____

Print Name: Thomas J. Coyle Jr

Date: 4/13/22

AGENCY CONCURRENCE:

Approved as lender or insurer of fund to defray the costs of this contract and without liability for any payments thereunder, the USDA Rural Development hereby concurs in the award of this contract.

By: _____ Title: Supervisory Architect - Western States USDA-Rural Development

Print Name: Norman L. Schoen Date: January 17, 2023

AIA Document A141™ – 2014. Copyright © 2004 and 2014 by The American Institute of Architects. All rights reserved. The "American Institute of Architects," "AIA," the AIA Logo, and "AIA Contract Documents" are registered trademarks and may not be used without permission. This document was produced by AIA software at 17:24:06 ET on 04/01/2022 under Order No.2114285436 which expires on 02/22/2023, is not for resale, is licensed for one-time use only, and may only be used in accordance with the AIA Contract Documents® Terms of Service. To report copyright violations, e-mail copyright@aia.org.
User Notes: (913200243)

DRAFT AIA® Document A141™ – 2014 Exhibit A.1

Preliminary Design Amendment Phase 1B

This Amendment is incorporated into the accompanying AIA Document A141™–2014, Standard Form of Agreement Between Owner and Design-Builder dated the « » day of « » in the year « » (the "Agreement")

for the following PROJECT:
(Name and location or address)

« West Wendover Fire Station »
« N. Gene L. Jones Way
West Wendover, NV 89883 »

THE OWNER:
(Name, legal status and address)

« City of West Wendover »« »
«1111 N. Gene L. Jones Way
West Wendover, NV 89883 »

THE DESIGN-BUILDER:
(Name, legal status and address)

« CORE West, Inc. »« a Nevada corporation »
« 7150 Cascade Valley Court
Las Vegas, NV 89128 »

The Owner and Design-Builder hereby amend the Agreement as follows.

TABLE OF ARTICLES

A.1 CONTRACT SUM

A.2 CONTRACT TIME

A.3 INFORMATION UPON WHICH AMENDMENT IS BASED

EXHIBITS

A PHASE 1B DESIGN-BUILDERS PROPOSAL

ARTICLE A.1 CONTRACT SUM

§ A.1.1 The Owner shall pay the Design-Builder the Contract Sum in current funds for the Design-Builder's performance of the Contract after the execution of this Amendment. The Contract Sum shall be one of the following and shall not include compensation the Owner paid the Design-Builder for Work performed prior to execution of this Amendment:

[«X»] Stipulated Sum, in accordance with Section A.1.2 below

§ A.1.2 Stipulated Sum

§ A.1.2.1 The Stipulated Sum shall be « » ($ « »), subject to authorized adjustments as provided in the Design-Build Documents.

ADDITIONS AND DELETIONS: The author of this document has added information needed for its completion. The author may also have revised the text of the original AIA standard form. An *Additions and Deletions Report* that notes added information as well as revisions to the standard form text is available from the author and should be reviewed.

This document has important legal consequences. Consultation with an attorney is encouraged with respect to its completion or modification.

Consultation with an attorney is also encouraged with respect to professional licensing requirements in the jurisdiction where the Project is located.

ELECTRONIC COPYING of any portion of this AIA® Document to another electronic file is prohibited and constitutes a violation of copyright laws as set forth in the footer of this document.

AIA Document A141™ – 2014 Exhibit A. Copyright © 2004 and 2014 by The American Institute of Architects. All rights reserved. The "American Institute of Architects," "AIA," the AIA Logo, and "AIA Contract Documents" are registered trademarks and may not be used without permission. This draft was produced by AIA software at 14:04:33 ET on 06/25/2021 under Order No.8646071325 which expires on 06/25/2022, is not for resale, is licensed for one-time use only, and may only be used in accordance with the AIA Contract Documents® Terms of Service. To report copyright violations, e-mail copyright@aia.org.
User Notes: (1932224331)

§ A.1.2.2 The Stipulated Sum is based upon the following Preliminary Design Services , which are described in the Design-Build Documents and are hereby accepted by the Owner:

« Continuation of Preliminary Design Services Phase 1B: “ “ »

§ A.1.5 Payments
§ A.1.5.1 Progress Payments
§ A.1.5.1.1 Based upon Applications for Payment submitted to the Owner by the Design-Builder, the Owner shall make progress payments on account of the Contract Sum to the Design-Builder as provided below and elsewhere in the Design-Build Documents.

§ A.1.5.1.2 The period covered by each Application for Payment shall be one calendar month ending on the last day of the month, and as follows:

« For completion of the Phase 1B services to be performed prior to the execution of the Design Build Amendment, and as stipulated in Article 2 of the Agreement. »

ARTICLE A.2 CONTRACT TIME
§ A.2.1 Contract Time, as defined in the Agreement at Section 1.4.13, is the period of time, including authorized adjustments, for Substantial Completion of the Work.

§ A.2.2 The Design-Builder shall be allowed a duration as defined below for Phase 1B services.

«Phase 1B Services shall be completed “…” (##) days after Execution of this Amendment and Notice to Proceed by Owner. »

ARTICLE A.3 INFORMATION UPON WHICH AMENDMENT IS BASED
§ A.3.1 The Contract Sum and Contract Time set forth in this Amendment are based on the following:

«Phase 1B Proposal Attached as Exhibit A to this Amendment. »

This Amendment to the Agreement entered into as of the day and year first written above.

OWNER *(Signature)*	**DESIGN-BUILDER** *(Signature)*
« »« »	« »« »
(Printed name and title)	*(Printed name and title)*

AIA Document A141™ – 2014 Exhibit A. Copyright © 2004 and 2014 by The American Institute of Architects. All rights reserved. The "American Institute of Architects," "AIA," the AIA Logo, and "AIA Contract Documents" are registered trademarks and may not be used without permission. This draft was produced by AIA software at 14:04:33 ET on 06/25/2021 under Order No.8646071325 which expires on 06/25/2022, is not for resale, is licensed for one-time use only, and may only be used in accordance with the AIA Contract Documents® Terms of Service. To report copyright violations, e-mail copyright@aia.org.
User Notes: (1932224331)

DRAFT AIA® Document A141™ – 2014 Exhibit A

Design-Build Amendment

This Amendment is incorporated into the accompanying AIA Document A141™–2014, Standard Form of Agreement Between Owner and Design-Builder dated the « » day of « » in the year « » (the "Agreement")

for the following PROJECT:
(Name and location or address)

«West Wendover Fire Station »
«N. Gene L. Jones Way
West Wendover, NV 89883 »

THE OWNER:
(Name, legal status and address)

«City of West Wendover »« »
«1111 N. Gene L. Jones Way
West Wendover, NV 89883 »

THE DESIGN-BUILDER:
(Name, legal status and address)

«CORE West, Inc.»« a Nevada corporation »
«7150 Cascade Valley Court
Las Vegas, NV 89128 »

The Owner and Design-Builder hereby amend the Agreement as follows.

TABLE OF ARTICLES

A.1 CONTRACT SUM

A.2 CONTRACT TIME

A.3 INFORMATION UPON WHICH AMENDMENT IS BASED

A.4 DESIGN-BUILDER'S PERSONNEL, CONTRACTORS AND SUPPLIERS

A.5 COST OF THE WORK

EXHIBITS

A GUARANTEED MAXIMUM PRICE STATEMENT

B BASIS OF GUARANTEED MAXIMUM PRICE

C ENUMERATION OF DOCUMENTS

D BASELINE PROJECT SCHEDULE

ADDITIONS AND DELETIONS: The author of this document has added information needed for its completion. The author may also have revised the text of the original AIA standard form. An *Additions and Deletions Report* that notes added information as well as revisions to the standard form text is available from the author and should be reviewed.

This document has important legal consequences. Consultation with an attorney is encouraged with respect to its completion or modification.

Consultation with an attorney is also encouraged with respect to professional licensing requirements in the jurisdiction where the Project is located.

ELECTRONIC COPYING of any portion of this AIA® Document to another electronic file is prohibited and constitutes a violation of copyright laws as set forth in the footer of this document.

AIA Document A141™ – 2014 Exhibit A. Copyright © 2004 and 2014 by The American Institute of Architects. All rights reserved. The "American Institute of Architects," "AIA," the AIA Logo, and "AIA Contract Documents" are registered trademarks and may not be used without permission. This draft was produced by AIA software at 14:04:33 ET on 06/25/2021 under Order No.8646071325 which expires on 06/25/2022, is not for resale, is licensed for one-time use only, and may only be used in accordance with the AIA Contract Documents® Terms of Service. To report copyright violations, e-mail copyright@aia.org.
User Notes: (1932224331)

ARTICLE A.1 CONTRACT SUM

§ A.1.1 The Owner shall pay the Design-Builder the Contract Sum in current funds for the Design-Builder's performance of the Contract after the execution of this Amendment. The Contract Sum shall be one of the following and shall not include compensation the Owner paid the Design-Builder for Work performed prior to execution of this Amendment:

(Check the appropriate box.)

[«X »] Cost of the Work plus the Design-Builder's Fee with a Guaranteed Maximum Price, in accordance with Section A.1.4 below

§ A.1.2 Cost of the Work Plus Design-Builder's Fee With a Guaranteed Maximum Price

§ A.1.2.1 The Cost of the Work is as defined in Article A.5, Cost of the Work.

§ A.1.2.2 The Design-Builder's Fee:

(A percentage of the Cost of the Work with provision for determining the Design-Builder's Fee and the method for adjustment to the Fee for changes in the Work.)

«Shall be Four- and One-Half percent (4.5%) of the Cost of the Work, as adjusted in accordance below.

Design-Builder's Fee will be adjusted as follows for any changes in the Work:

For additive Change Orders, including additive Change Orders arising from both additive and deductive items, it is agreed that Design-Builder shall receive a Fee of Four- and One-Half percent (4.5%) of the additional Costs of the Work incurred for that Change Order,

For deductive Change Orders, including deductive Change Orders arising from both additive and deductive items, Design-Builder's Fee shall not be reduced »

§ A.1.2.3 Guaranteed Maximum Price

§ A.1.2.3.1 The sum of the Cost of the Work and the Design-Builder's Fee is guaranteed by the Design-Builder not to exceed « » ($ « »), subject to additions and deductions for changes in the Work as provided in the Design-Build Documents.

(Insert specific provisions if the Design-Builder is to participate in any savings.)

« If the sum of the actual Cost of the Work and Design-Builder's Fee (and, if applicable, any prices established under Section A.1.2.3.4 hereof) is less than the GMP, as such GMP may have been adjusted over the course of the Project, the difference ("Savings") shall be shared as follows:

TBD percent (**TBD**%) to Design-Builder and **TBD** percent (**TBD**%) to Owner.

Savings shall be calculated and paid as part of Final Payment under A.1.3.3 hereof, with the understanding that to the extent Design-Builder incurs costs after Final Completion which would have been payable to Design-Builder as a Cost of the Work, the parties shall recalculate the Savings in light of the costs so incurred, and Design-Builder shall be paid by Owner accordingly. »

§ A.1.2.3.2 Itemized Statement of the Guaranteed Maximum Price

Provided below is an itemized statement of the Guaranteed Maximum Price organized by trade categories, allowances, contingencies, alternates, the Design-Builder's Fee, and other items that comprise the Guaranteed Maximum Price. Notwithstanding itemization, there is one overall Guaranteed Maximum Price and the individual line items are not separate price maximums. The Design-Builder shall be permitted to reallocate the individual line items and to provide an updated Schedule of Values to the Owner that reflects any such reallocation at its sole discretion, provided that it does not exceed the Guaranteed Maximum Price. *(Provide an attachment.)*

«Exhibit A Guaranteed Maximum Price Statement »

AIA Document A141™ – 2014 Exhibit A. Copyright © 2004 and 2014 by The American Institute of Architects. All rights reserved. The "American Institute of Architects," "AIA," the AIA Logo, and "AIA Contract Documents" are registered trademarks and may not be used without permission. This draft was produced by AIA software at 14:04:33 ET on 06/25/2021 under Order No.8646071325 which expires on 06/25/2022, is not for resale, is licensed for one-time use only, and may only be used in accordance with the AIA Contract Documents® Terms of Service. To report copyright violations, e-mail copyright@aia.org.
User Notes: (1932224331)

§ A.1.2.3.3 The Guaranteed Maximum Price is based on the following alternates, if any, which are described in the Design-Build Documents and are hereby accepted by the Owner:

« Exhibit B Basis of Guaranteed Maximum Price »

§ A.1.2.3.4 Unit Prices, if any:
(Identify item, state the unit price, and state any applicable quantity limitations.)

Item	Units and Limitations	Price per Unit ($0.00)
TBD	TBD	TBD

§ A.1.2.3.5 Assumptions, if any, on which the Guaranteed Maximum Price is based:

« Exhibit B Basis of Guaranteed Maximum Price
Exhibit D Baseline Project Schedule »

§ A.1.3 Payments
§ A.1.3.1 Progress Payments
§ A.1.3.1.1 Based upon Applications for Payment submitted to the Owner by the Design-Builder, the Owner shall make progress payments on account of the Contract Sum to the Design-Builder as provided below and elsewhere in the Design-Build Documents.

§ A.1.3.1.2 The period covered by each Application for Payment shall be one calendar month ending on the last day of the month.

«And as Section 2.1.4 of the Agreement. »

§ A.1.3.1.3 Provided that an Application for Payment is received not later than the «last» day of the month, the Owner shall make payment of the certified amount to the Design-Builder not later than the «last» day of the «following » month. If an Application for Payment is received by the Owner after the application date fixed above, payment shall be made by the Owner not later than «Sixty » («60») days after the Owner receives the Application for Payment.
(Federal, state or local laws may require payment within a certain period of time.)

§ A.1.3.1.4 With each Application for Payment where the Contract Sum is based upon the Cost of the Work, or the Cost of the Work with a Guaranteed Maximum Price, the Design-Builder shall submit payrolls, petty cash accounts, receipted invoices or invoices with check vouchers attached, and any other evidence required by the Owner to demonstrate that cash disbursements already made by the Design-Builder on account of the Cost of the Work equal or exceed (1) progress payments already received by the Design-Builder, less (2) that portion of those payments attributable to the Design-Builder's Fee; plus (3) payrolls for the period covered by the present Application for Payment.

§ A.1.3.1.5 With each Application for Payment where the Contract Sum is based upon a Stipulated Sum or Cost of the Work with a Guaranteed Maximum Price, the Design-Builder shall submit the most recent schedule of values in accordance with the Design-Build Documents. The schedule of values shall allocate the entire Contract Sum among the various portions of the Work. Compensation for design services, if any, shall be shown separately. Where the Contract Sum is based on the Cost of the Work with a Guaranteed Maximum Price, the Design-Builder's Fee shall be shown separately. The schedule of values shall be prepared in such form and supported by such data to substantiate its accuracy as the Owner may require. This schedule of values, unless objected to by the Owner, shall be used as a basis for reviewing the Design-Builder's Applications for Payment.

§ A.1.3.1.6 In taking action on the Design-Builder's Applications for Payment, the Owner shall be entitled to rely on the accuracy and completeness of the information furnished by the Design-Builder and shall not be deemed to have made a detailed examination, audit or arithmetic verification of the documentation submitted in accordance with Sections A.1.3.1.4 or A.1.3.1.5, or other supporting data; to have made exhaustive or continuous on-site inspections; or to have made examinations to ascertain how or for what purposes the Design-Builder has used amounts previously paid. Such examinations, audits and verifications, if required by the Owner, will be performed by the Owner's auditors acting in the sole interest of the Owner.

AIA Document A141™ – 2014 Exhibit A. Copyright © 2004 and 2014 by The American Institute of Architects. All rights reserved. The "American Institute of Architects," "AIA," the AIA Logo, and "AIA Contract Documents" are registered trademarks and may not be used without permission. This draft was produced by AIA software at 14:04:33 ET on 06/25/2021 under Order No.8646071325 which expires on 06/25/2022, is not for resale, is licensed for one-time use only, and may only be used in accordance with the AIA Contract Documents© Terms of Service. To report copyright violations, e-mail copyright@aia.org.
User Notes: (1932224331)

§ A.1.3.1.7 Except with the Owner's prior approval, the Design-Builder shall not make advance payments to suppliers for materials or equipment which have not been delivered and stored at the site.

§ A.1.3.2 Progress Payments—Cost of the Work Plus a Fee with a Guaranteed Maximum Price

§ A.1.3.2.1 Applications for Payment where the Contract Sum is based upon the Cost of the Work Plus a Fee with a Guaranteed Maximum Price shall show the percentage of completion of each portion of the Work as of the end of the period covered by the Application for Payment. The percentage of completion shall be the lesser of (1) the percentage of that portion of the Work which has actually been completed; or (2) the percentage obtained by dividing (a) the expense that has actually been incurred by the Design-Builder on account of that portion of the Work for which the Design-Builder has made or intends to make actual payment prior to the next Application for Payment by (b) the share of the Guaranteed Maximum Price allocated to that portion of the Work in the schedule of values.

§ A.1.3.2.2 Subject to other provisions of the Design-Build Documents, the amount of each progress payment shall be computed as follows:

.1 Take that portion of the Guaranteed Maximum Price properly allocable to completed Work as determined by multiplying the percentage of completion of each portion of the Work by the share of the Guaranteed Maximum Price allocated to that portion of the Work in the schedule of values. Pending final determination of cost to the Owner of changes in the Work, amounts not in dispute shall be included as provided in Section 6.3.9 of the Agreement.

.2 Add that portion of the Guaranteed Maximum Price properly allocable to materials and equipment delivered and suitably stored at the site for subsequent incorporation in the Work, or if approved in advance by the Owner, suitably stored off the site at a location agreed upon in writing;

.3 Add the Design-Builder's Fee, less retainage of «Five» percent (« 5 » %). The Design-Builder's Fee shall be computed upon the Cost of the Work at the rate stated in Section A.1.2.2 or, if the Design-Builder's Fee is stated as a fixed sum in that Section, shall be an amount that bears the same ratio to that fixed-sum fee as the Cost of the Work bears to a reasonable estimate of the probable Cost of the Work upon its completion;

.4 Subtract retainage of «Five » percent (« 5 » %) from that portion of the Work that the Design-Builder self-performs;

.5 Subtract the aggregate of previous payments made by the Owner;

.6 Subtract the shortfall, if any, indicated by the Design-Builder in the documentation required by Section A.1.3.1.4 to substantiate prior Applications for Payment, or resulting from errors subsequently discovered by the Owner's auditors in such documentation; and

.7 Subtract amounts, if any, for which the Owner has withheld or nullified a payment as provided in Section 9.5 of the Agreement.

§ A.1.3.2.3 The Owner and Design-Builder shall agree upon (1) a mutually acceptable procedure for review and approval of payments to the Architect, Consultants, and Contractors and (2) the percentage of retainage held on agreements with the Architect, Consultants, and Contractors; and the Design-Builder shall execute agreements in accordance with those terms.

§ A.1.3.3 Final Payment

§ A.1.3.3.1 Final payment, constituting the entire unpaid balance of the Contract Sum, shall be made by the Owner to the Design-Builder not later than 30 days after the Design-Builder has fully performed the Contract and the requirements of Section 9.10 of the Agreement have been satisfied, except for the Design-Builder's responsibility to correct non-conforming Work discovered after final payment or to satisfy other requirements, if any, which extend beyond final payment.

§ A.1.3.3.2 If the Contract Sum is based on the Cost of the Work, the Owner's auditors will review and report in writing on the Design-Builder's final accounting within 30 days after the Design-Builder delivers the final accounting to the Owner. Based upon the Cost of the Work the Owner's auditors report to be substantiated by the Design-Builder's final accounting, and provided the other conditions of Section 9.10 of the Agreement have been met, the Owner will, within seven days after receipt of the written report of the Owner's auditors, either issue a final Certificate for Payment, or notify the Design-Builder in writing of the reasons for withholding a certificate as provided in Section 9.5.1 of the Agreement.

AIA Document A141™ – 2014 Exhibit A. Copyright © 2004 and 2014 by The American Institute of Architects. All rights reserved. The "American Institute of Architects," "AIA," the AIA Logo, and "AIA Contract Documents" are registered trademarks and may not be used without permission. This draft was produced by AIA software at 14:04:33 ET on 06/25/2021 under Order No.8646071325 which expires on 06/25/2022, is not for resale, is licensed for one-time use only, and may only be used in accordance with the AIA Contract Documents® Terms of Service. To report copyright violations, e-mail copyright@aia.org.
User Notes: (1932224331)

ARTICLE A.2 CONTRACT TIME

§ A.2.1 Contract Time, as defined in the Agreement at Section 1.4.13, is the period of time, including authorized adjustments, for Substantial Completion of the Work.

§ A.2.2 The Design-Builder shall achieve Substantial Completion of the Work not later than « » (« ») days from the date of Commencement:
(Insert number of calendar days..)

«The Date of Commencement shall be ten (10) days after Design-Builder's receipt of the latter of the following:
a. Fully executed Design-Build Amendment.
b. Reasonable evidence of funding satisfactory to Design-Builder.
c. Issuance of Site Permit, Building Permit, and any other permits required to commence the Work and maintain unhindered progress.
d. Design-Builder's receipt of Owner's Notice to Proceed with the Construction Phase Services. »

, subject to adjustments of the Contract Time as provided in the Design-Build Documents.

«And as provided in Section 1.1.7.4 of the Agreement. »

ARTICLE A.3 INFORMATION UPON WHICH AMENDMENT IS BASED

§ A.3.1 The Contract Sum and Contract Time set forth in this Amendment are based on the following:

§ A.3.1.1 The Supplementary and other Conditions of the Contract:

Document	Title	Date	Pages

§ A.3.1.2 The Specifications:
(Exhibit attached to this Amendment.)

« Exhibit C Enumeration of Documents »

§ A.3.1.3 The Drawings:
(Exhibit attached to this Amendment.)

« Exhibit C Enumeration of Documents »

§ A.3.1.4 The Sustainability Plan, if any:
(If the Owner identified a Sustainable Objective in the Owner's Criteria, identify the Sustainability Plan. The Sustainability Plan identifies and describes the Sustainable Objective; the targeted Sustainable Measures; implementation strategies selected to achieve the Sustainable Measures; the Owner's and Design-Builder's roles and responsibilities associated with achieving the Sustainable Measures; the specific details about design reviews, testing or metrics to verify achievement of each Sustainable Measure; and the Sustainability Documentation required for the Project.)

« »

§ A.3.1.5 Allowances and Contingencies:
(Identify any agreed upon allowances and contingencies.)

.1 Allowances

« »

.2 Contingencies

AIA Document A141™ – 2014 Exhibit A. Copyright © 2004 and 2014 by The American Institute of Architects. All rights reserved. The "American Institute of Architects," "AIA," the AIA Logo, and "AIA Contract Documents" are registered trademarks and may not be used without permission. This draft was produced by AIA software at 14:04:33 ET on 06/25/2021 under Order No.8646071325 which expires on 06/25/2022, is not for resale, is licensed for one-time use only, and may only be used in accordance with the AIA Contract Documents® Terms of Service. To report copyright violations, e-mail copyright@aia.org.
User Notes: (1932224331)

« »

§ A.3.1.6 Design-Builder's assumptions and clarifications:

«Exhibit B Basis of Guaranteed Maximum Price »

§ A.3.1.7 Deviations from the Owner's Criteria as adjusted by a Modification:

« »

§ A.3.1.8 To the extent the Design-Builder shall be required to submit any additional Submittals to the Owner for review, indicate any such submissions below:

« »

ARTICLE A.4 DESIGN-BUILDER'S PERSONNEL AND CONSULTANT

§ A.4.1 The Design-Builder's key personnel are identified below:
(Identify name, title and contact information.)

.1 Superintendent

« »

.2 Project Manager

« »

§ A.4.2 The Design-Builder shall retain the following Consultants, identified within the Section 1.1.8 of the Agreement.

ARTICLE A.5 COST OF THE WORK

§ A.5.1 Cost To Be Reimbursed as Part of the Contract

§ A.5.1.1 Labor Costs

§ A.5.1.1.1 Wages of construction workers directly employed by the Design-Builder to perform the construction of the Work at the site or, at locations off-site.

§ A.5.1.1.2 Wages or salaries of the Design-Builder's supervisory and administrative personnel when stationed at the site or working off-Site to assist in the production or transportation of material and equipment necessary for the Work.

§ A.5.1.1.3 Wages and salaries of the Design-Builder's supervisory or administrative personnel engaged at factories, workshops or on the road, in expediting the production or transportation of materials or equipment required for the Work, but only for that portion of their time required for the Work.

§ A.5.1.1.4 Costs paid or incurred by the Design-Builder for taxes, insurance, contributions, assessments and benefits required by law or collective bargaining agreements and, for personnel not covered by such agreements, customary benefits such as sick leave, medical and health benefits, holidays, vacations and pensions, provided such costs are based on wages and salaries included in the Cost of the Work under Section A.5.1.1.

§ A.5.1.1.5 Bonuses, profit sharing, incentive compensation and any other discretionary payments paid to anyone hired by the Design-Builder or paid to the Architect or any Consultant, Contractor or supplier, with the Owner's prior approval.

§ A.5.1.2 Contract Costs. Payments made by the Design-Builder to the Architect, Consultants, Subcontractors and suppliers in accordance with the requirements of their subcontracts.

AIA Document A141™ – 2014 Exhibit A. Copyright © 2004 and 2014 by The American Institute of Architects. All rights reserved. The "American Institute of Architects," "AIA," the AIA Logo, and "AIA Contract Documents" are registered trademarks and may not be used without permission. This draft was produced by AIA software at 14:04:33 ET on 06/25/2021 under Order No.8646071325 which expires on 06/25/2022, is not for resale, is licensed for one-time use only, and may only be used in accordance with the AIA Contract Documents® Terms of Service. To report copyright violations, e-mail copyright@aia.org.
User Notes: (1932224331)

§ A.5.1.3 Costs of Materials and Equipment Incorporated in the Completed Construction

§ A.5.1.3.1 Costs, including transportation and storage, of materials and equipment incorporated or to be incorporated in the completed construction.

§ A.5.1.3.2 Costs of materials described in the preceding Section A.5.1.3.1 in excess of those actually installed to allow for reasonable waste and spoilage. Unused excess materials, if any, shall become the Owner's property at the completion of the Work or, at the Owner's option, shall be sold by the Design-Builder. Any amounts realized from such sales shall be credited to the Owner as a deduction from the Cost of the Work.

§ A.5.1.4 Costs of Other Materials and Equipment, Temporary Facilities and Related Items

§ A.5.1.4.1 Costs of transportation, storage, installation, maintenance, dismantling and removal of materials, supplies, temporary facilities, machinery, equipment and hand tools not customarily owned by construction workers that are provided by the Design-Builder at the site and fully consumed in the performance of the Work. Costs of materials, supplies, temporary facilities, machinery, equipment and tools that are not fully consumed shall be based on the cost or value of the item at the time it is first used on the Project site less the value of the item when it is no longer used at the Project site. Costs for items not fully consumed by the Design-Builder shall mean fair market value.

§ A.5.1.4.2 Rental charges for temporary facilities, machinery, equipment and hand tools not customarily owned by construction workers that are provided by the Design-Builder at the site and costs of transportation, installation, minor repairs, dismantling and removal. The total rental cost of any Design-Builder-owned item may not exceed the purchase price of any comparable item. Rates of Design-Builder-owned equipment and quantities of equipment shall be subject to the Owner's prior approval.

§ A.5.1.4.3 Costs of removal of debris from the site of the Work and its proper and legal disposal.

§ A.5.1.4.4 Costs of document reproductions, electronic communications, postage and parcel delivery charges, dedicated data and communications services, teleconferences, Project websites, extranets and reasonable petty cash expenses of the site office.

§ A.5.1.4.5 Costs of materials and equipment suitably stored off the site at a mutually acceptable location, with the Owner's prior approval.

§ A.5.1.5 Miscellaneous Costs

§ A.5.1.5.1 Premiums for that portion of insurance and bonds required by the Design-Build Documents that can be directly attributed to the Contract. With the Owner's prior approval self-insurance for either full or partial amounts of the coverages required by the Design-Build Documents.

§ A.5.1.5.2 Sales, use or similar taxes imposed by a governmental authority that are related to the Work and for which the Design-Builder is liable.

§ A.5.1.5.3 Fees and assessments for the building permit and for other permits, licenses and inspections for which the Design-Builder is required by the Design-Build Documents to pay.

§ A.5.1.5.4 Fees of laboratories for tests required by the Design-Build Documents, except those related to defective or nonconforming Work for which reimbursement is excluded by Section 15.5.3 of the Agreement or by other provisions of the Design-Build Documents, and which do not fall within the scope of Section A.5.1.6.3.

§ A.5.1.5.5 Royalties and license fees paid for the use of a particular design, process or product required by the Design-Build Documents; the cost of defending suits or claims for infringement of patent rights arising from such requirement of the Design-Build Documents; and payments made in accordance with legal judgments against the Design-Builder resulting from such suits or claims and payments of settlements made with the Owner's consent. However, such costs of legal defenses, judgments and settlements shall not be included in the calculation of the Design-Builder's Fee or subject to the Guaranteed Maximum Price. If such royalties, fees and costs are excluded by the second to last sentence of Section 3.1.13.2 of the Agreement or other provisions of the Design-Build Documents, then they shall not be included in the Cost of the Work.

§ A.5.1.5.6 With the Owner's prior approval, costs for electronic equipment and software directly related to the Work.

AIA Document A141™ – 2014 Exhibit A. Copyright © 2004 and 2014 by The American Institute of Architects. All rights reserved. The "American Institute of Architects," "AIA," the AIA Logo, and "AIA Contract Documents" are registered trademarks and may not be used without permission. This draft was produced by AIA software at 14:04:33 ET on 06/25/2021 under Order No.8646071325 which expires on 06/25/2022, is not for resale, is licensed for one-time use only, and may only be used in accordance with the AIA Contract Documents® Terms of Service. To report copyright violations, e-mail copyright@aia.org.
User Notes: (1932224331)

§ A.5.1.5.7 Deposits lost for causes other than the Design-Builder's negligence or failure to fulfill a specific responsibility in the Design-Build Documents.

§ A.5.1.5.8 With the Owner's prior approval, which shall not be unreasonably withheld, legal, mediation and arbitration costs, including attorneys' fees, other than those arising from disputes between the Owner and Design-Builder, reasonably incurred by the Design-Builder after the execution of the Agreement and in the performance of the Work.

§ A.5.1.5.9 With the Owner's prior approval, expenses incurred in accordance with the Design-Builder's standard written personnel policy for relocation, and temporary living allowances of, the Design-Builder's personnel required for the Work.

§ A.5.1.5.10 That portion of the reasonable expenses of the Design-Builder's supervisory or administrative personnel incurred while traveling in discharge of duties connected with the Work.

§ A.5.1.6 Other Costs and Emergencies

§ A.5.1.6.1 Other costs incurred in the performance of the Work if, and to the extent, approved in advance in writing by the Owner.

§ A.5.1.6.2 Costs incurred in taking action to prevent threatened damage, injury or loss in case of an emergency affecting the safety of persons and property.

§ A.5.1.6.3 Costs of repairing or correcting damaged or nonconforming Work executed by the Design-Builder, Contractors or suppliers, provided that such damaged or nonconforming Work was not caused by negligence or failure to fulfill a specific responsibility of the Design-Builder and only to the extent that the cost of repair or correction is not recovered by the Design-Builder from insurance, sureties, Contractors, suppliers, or others.

§ A.5.1.7 Related Party Transactions

§ A.5.1.7.1 For purposes of Section A.5.1.7, the term "related party" shall mean a parent, subsidiary, affiliate or other entity having common ownership or management with the Design-Builder; any entity in which any stockholder in, or management employee of, the Design-Builder owns any interest in excess of ten percent in the aggregate; or any person or entity which has the right to control the business or affairs of the Design-Builder. The term "related party" includes any member of the immediate family of any person identified above.

§ A.5.1.7.2 If any of the costs to be reimbursed arise from a transaction between the Design-Builder and a related party, the Design-Builder shall notify the Owner of the specific nature of the contemplated transaction, including the identity of the related party and the anticipated cost to be incurred, before any such transaction is consummated or cost incurred. If the Owner, after such notification, authorizes the proposed transaction, then the cost incurred shall be included as a cost to be reimbursed, and the Design-Builder shall procure the Work, equipment, goods or service from the related party, as a Contractor, according to the terms of Section A.5.4. If the Owner fails to authorize the transaction, the Design-Builder shall procure the Work, equipment, goods or service from some person or entity other than a related party according to the terms of Section A.5.4.

§ A.5.2 Costs Not to Be Reimbursed as Part of this Contract

The Cost of the Work shall not include the items listed below:

.1 Salaries and other compensation of the Design-Builder's personnel stationed at the Design-Builder's principal office or offices other than the site office, except as specifically provided in Section A.5.1.1;

.2 Expenses of the Design-Builder's principal office and offices other than the site office;

.3 Overhead and general expenses, except as may be expressly included in Section A.5.1;

.4 The Design-Builder's capital expenses, including interest on the Design-Builder's capital employed for the Work;

.5 Except as provided in Section A.5.1.6.3 of this Agreement, costs due to the negligence or failure of the Design-Builder, Contractors and suppliers or anyone directly or indirectly employed by any of them or for whose acts any of them may be liable to fulfill a specific responsibility of the Contract;

.6 Any cost not specifically and expressly described in Section A.5.1; and

AIA Document A141™ – 2014 Exhibit A. Copyright © 2004 and 2014 by The American Institute of Architects. All rights reserved. The "American Institute of Architects," "AIA," the AIA Logo, and "AIA Contract Documents" are registered trademarks and may not be used without permission. This draft was produced by AIA software at 14:04:33 ET on 06/25/2021 under Order No.8646071325 which expires on 06/25/2022, is not for resale, is licensed for one-time use only, and may only be used in accordance with the AIA Contract Documents© Terms of Service. To report copyright violations, e-mail copyright@aia.org.
User Notes: (1932224331)

.7 Costs, other than costs included in Change Orders approved by the Owner, that would cause the Guaranteed Maximum Price to be exceeded.

§ A.5.3 Discounts, Rebates, and Refunds

§ A.5.3.1 Cash discounts obtained on payments made by the Design-Builder shall accrue to the Owner if (1) before making the payment, the Design-Builder included them in an Application for Payment and received payment from the Owner, or (2) the Owner has deposited funds with the Design-Builder with which to make payments; otherwise, cash discounts shall accrue to the Design-Builder. Trade discounts, rebates, refunds and amounts received from sales of surplus materials and equipment shall accrue to the Owner, and the Design-Builder shall make provisions so that they can be obtained.

§ A.5.3.2 Amounts that accrue to the Owner in accordance with Section A.5.3.1 shall be credited to the Owner as a deduction from the Cost of the Work.

§ A.5.4 Other Agreements

§ A.5.4.1 When the Design-Builder has provided a Guaranteed Maximum Price, and a specific bidder (1) is recommended to the Owner by the Design-Builder; (2) is qualified to perform that portion of the Work; and (3) has submitted a bid that conforms to the requirements of the Design-Build Documents without reservations or exceptions, but the Owner requires that another bid be accepted, then the Design-Builder may require that a Change Order be issued to adjust the Guaranteed Maximum Price by the difference between the bid of the person or entity recommended to the Owner by the Design-Builder and the amount of the subcontract or other agreement actually signed with the person or entity designated by the Owner.

§ A.5.4.2 Agreements between the Design-Builder and Contractors shall conform to the applicable payment provisions of the Design-Build Documents, and shall not be awarded on the basis of cost plus a fee without the prior consent of the Owner. If an agreement between the Design Builder and a Contractor is awarded on a cost plus a fee basis, the Design-Builder shall provide in the agreement for the Owner to receive the same audit rights with regard to the Cost of the Work performed by the Contractor as the Owner receives with regard to the Design-Builder in Section A.5.5, below.

§ A.5.4.3 The agreements between the Design-Builder and Architect and other Consultants identified in the Agreement shall be in writing. These agreements shall be promptly provided to the Owner upon the Owner's written request.

§ A.5.5 Accounting Records

The Design-Builder shall keep full and detailed records and accounts related to the cost of the Work and exercise such controls as may be necessary for proper financial management under the Contract and to substantiate all costs incurred. The accounting and control systems shall be satisfactory to the Owner. The Owner and the Owner's auditors shall, during regular business hours and upon reasonable notice, be afforded access to, and shall be permitted to audit and copy, the Design-Builder's records and accounts, including complete documentation supporting accounting entries, books, correspondence, instructions, drawings, receipts, subcontracts, Contractor's proposals, purchase orders, vouchers, memoranda and other data relating to the Contract. The Design-Builder shall preserve these records for a period of three years after final payment, or for such longer period as may be required by law.

§ A.5.6 Relationship of the Parties

The Design-Builder accepts the relationship of trust and confidence established by this Agreement and covenants with the Owner to exercise the Design-Builder's skill and judgment in furthering the interests of the Owner; to furnish efficient construction administration, management services and supervision; to furnish at all times an adequate supply of workers and materials; and to perform the Work in an expeditious and economical manner consistent with the Owner's interests.

AIA Document A141™ – 2014 Exhibit A. Copyright © 2004 and 2014 by The American Institute of Architects. All rights reserved. The "American Institute of Architects," "AIA," the AIA Logo, and "AIA Contract Documents" are registered trademarks and may not be used without permission. This draft was produced by AIA software at 14:04:33 ET on 06/25/2021 under Order No.8646071325 which expires on 06/25/2022, is not for resale, is licensed for one-time use only, and may only be used in accordance with the AIA Contract Documents© Terms of Service. To report copyright violations, e-mail copyright@aia.org.
User Notes: (1932224331)

This Amendment to the Agreement entered into as of the day and year first written above.

OWNER *(Signature)*	**DESIGN-BUILDER** *(Signature)*
« »« »	« »« »
(Printed name and title)	*(Printed name and title)*

DRAFT

AIA Document A141™ – 2014 Exhibit A. Copyright © 2004 and 2014 by The American Institute of Architects. All rights reserved. The "American Institute of Architects," "AIA," the AIA Logo, and "AIA Contract Documents" are registered trademarks and may not be used without permission. This draft was produced by AIA software at 14:04:33 ET on 06/25/2021 under Order No.8646071325 which expires on 06/25/2022, is not for resale, is licensed for one-time use only, and may only be used in accordance with the AIA Contract Documents® Terms of Service. To report copyright violations, e-mail copyright@aia.org.
User Notes: (1932224331)

AIA® Document A141™ – 2014 Exhibit B

Insurance and Bonds

for the following PROJECT:
(Name and location or address)

City of West Wendover – Fire Station
Located immediately adjacent and west of the existing West Wendover City Hall that is located on: Gene L. Jones Way, West Wendover, NV 89883

THE OWNER:
(Name, legal status and address)

City of West Wendover
111 N. Gene L. Jones Way
West Wendover, NV 89883

THE DESIGN-BUILDER:
(Name, legal status and address)

CORE West, Inc. a Nevada corporation
7150 Cacade Valley Court
Las Vegas, NV 89128

THE AGREEMENT
This Insurance Exhibit is part of the accompanying agreement for the Project, between the Owner and the Design-Builder (hereinafter, the Agreement), dated the 1st day of April in the year 2022 .
(In words, indicate day, month and year.)

TABLE OF ARTICLES

B.1 GENERAL

B.2 DESIGN BUILDER'S INSURANCE AND BONDS

B.3 OWNER'S INSURANCE

B.4 SPECIAL TERMS AND CONDITIONS

ARTICLE B.1 GENERAL
The Owner and Design-Builder shall purchase and maintain insurance and provide bonds as set forth in this Exhibit B. Where a provision in this Exhibit conflicts with a provision in the Agreement into which this Exhibit is incorporated, the provision in this Exhibit will prevail.

ARTICLE B.2 DESIGN BUILDER'S INSURANCE AND BONDS
§ B.2.1 The Design-Builder shall purchase and maintain the following types and limits of insurance from a company or companies lawfully authorized to do business in the jurisdiction where the Project is located. The Design-Builder shall maintain the required insurance until the expiration of the period for correction of Work as set forth in Section 11.2.2.1 of the Agreement, unless a different duration is stated below:

ADDITIONS AND DELETIONS:
The author of this document has added information needed for its completion. The author may also have revised the text of the original AIA standard form. An *Additions and Deletions Report* that notes added information as well as revisions to the standard form text is available from the author and should be reviewed. A vertical line in the left margin of this document indicates where the author has added necessary information and where the author has added to or deleted from the original AIA text.

This document has important legal consequences. Consultation with an attorney is encouraged with respect to its completion or modification.

Init.
/

AIA Document A141™ – 2014 Exhibit B. Copyright © 2004 and 2014 by The American Institute of Architects. All rights reserved. The "American Institute of Architects," "AIA," the AIA Logo, and "AIA Contract Documents" are registered trademarks and may not be used without permission. This document was produced by AIA software at 17:14:36 ET on 04/01/2022 under Order No.2114285436 which expires on 02/22/2023, is not for resale, is licensed for one-time use only, and may only be used in accordance with the AIA Contract Documents® Terms of Service. To report copyright violations, e-mail copyright@aia.org.
User Notes: (929915445)

(If the Design-Builder is required to maintain insurance for a duration other than the expiration of the period for correction of Work, state the duration.)

Professional Liability continuous coverage will be maintained for an extended reporting period of at least three (3) years beginning from the time that work under this agreement is complete.

§ B.2.1.1 Commercial General Liability with policy limits of not less than Two Million Dollars ($ 2,000,000.00) for each occurrence and Four Million Dollars ($ 4,000,000.00) in the aggregate providing coverage for claims including

.1 damages because of bodily injury, sickness or disease, including occupational sickness or disease, and death of any person;
.2 personal injury;
.3 damages because of injury to or destruction of tangible property;
.4 bodily injury or property damage arising out of completed operations; and
.5 contractual liability applicable to the Design-Builder's obligations under Section 3.1.14 of the Agreement.
.6 The Owner shall be named as an additional insured on the liability insurance.

§ B.2.1.2 Automobile Liability covering vehicles owned by the Design-Builder and non-owned vehicles used by the Design-Builder with combined single policy limits of not less than Two Million Dollars ($ 2,000,000.00) each accident for bodily injury, death of any person, and property damage arising out of the ownership, maintenance and use of those motor vehicles specified in this Section B.2.1.2, along with any other statutorily required automobile coverage.

§ B.2.1.3 The Design-Builder may achieve the required limits and coverage for Commercial General Liability and Automobile Liability through a combination of primary and excess liability insurance, provided such primary and excess insurance policies result in the same or greater coverage as those required under Sections B.2.1.1 and B.2.1.2.

§ B.2.1.4 Workers' Compensation at statutory limits.

§ B.2.1.5 Employers' Liability with policy limits as provided below:

$1,000,000 Ea. Accident,
$1,000,000 Disease
$1,000,000 Policy limit

§ B.2.1.6 Professional Liability covering negligent acts, errors and omissions in the performance of professional services, with policy limits of not less than Five Million Dollars ($ 5,000,000.00) per claim and Five Million Dollars ($ 5,000,000.00) in the aggregate.

§ B.2.1.7 Pollution Liability covering performance of the Work, with policy limits of not less than Two Million Dollars ($ 2,000,000.00) per claim and Two Million Dollars ($ 2,000,000.00) in the aggregate.

(Paragraph deleted)

§ B.2.1.8 The Design-Builder shall provide written notification to the Owner of the cancellation or expiration of any insurance required by this Article B.2. The Design-Builder shall provide such written notice within five (5) business days of the date the Design-Builder is first aware of the cancellation or expiration, or is first aware that the cancellation or expiration is threatened or otherwise may occur, whichever comes first.

§ B.2.1.9 Additional Insured Obligations. The Owner shall be additional insureds on the Design-Builder's primary and excess insurance policies for Commercial General Liability, Automobile Liability and Pollution Liability. The additional insured coverage shall be primary and non-contributory to any of the Owner's insurance policies. The additional insured coverage shall apply to both ongoing operations and completed operations. The policy limits applicable to the additional insureds shall be the same amount applicable to the named insured or, if the policy provides otherwise, policy limits not less than the amounts required under this Agreement.

§ B.2.1.10 Certificates of Insurance. The Design-Builder shall provide certificates of insurance acceptable to the Owner evidencing compliance with the requirements in this Article B.2: (1) prior to commencement of the Work;

Init.
/

AIA Document A141™ – 2014 Exhibit B. Copyright © 2004 and 2014 by The American Institute of Architects. All rights reserved. The "American Institute of Architects," "AIA," the AIA Logo, and "AIA Contract Documents" are registered trademarks and may not be used without permission. This document was produced by AIA software at 17:14:36 ET on 04/01/2022 under Order No.2114285436 which expires on 02/22/2023, is not for resale, is licensed for one-time use only, and may only be used in accordance with the AIA Contract Documents® Terms of Service. To report copyright violations, e-mail copyright@aia.org.
User Notes: (929915445)

(2) upon renewal or replacement of each required policy of insurance; and (3) upon Owner's written request. An additional certificate evidencing continuation of liability coverage, including coverage for completed operations, shall be submitted with the final Application for Payment as required by Section 9.10.2 of the Agreement and thereafter upon renewal or replacement of such coverage until the expiration of the time required by Section B.2.1. The certificates will show the Owner as additional insureds on the Design-Builder's primary and excess insurance policies for Commercial General Liability, Automobile Liability, and Pollution Liability. Information concerning reduction of coverage on account of revised limits, claims paid under the General Aggregate or both, shall be furnished by the Design-Builder with reasonable promptness.

§ B.2.1.11 The insurance required in subparagraph B.2.1 shall be written for not less than the following limits, or greater if required by law:

.1 Workers' Compensation:

(a)	State:	Statutory
(b)	Applicable Federal (E.g. Longshoremen's)	Statutory
(c)	Employer's Liability	$1,000,000 per Accident $1,000,000 Disease, Policy Limit $1,000,000 Disease, Each Employee

.2 Comprehensive or Commercial General Liability (Including Premises-Operations; Independent Design-Builders' Protective; Products and Completed Operations; Broad Form Property Damage):

(a)	Bodily Injury	$1,000,000 Each Occurrence $2,000,000 Aggregate
(b)	Property Damage	$1,000,000 Each Occurrence $2,000,000 Aggregate
(c)	Products and Completed Operations to be maintained for three (3) years after final payment.	$2,000,000 Aggregate
(d)	Property Damaged Liability Insurance shall provide X, C and U coverage.	
(e)	Broad Form Property Damage Coverage shall include Completed Operations.	

.3 Contractual Liability:

(a)	Bodily Injury	$1,000,000 Each Occurrence $2,000,000 Aggregate
(b)	Property Damage	$1,000,000 Each Occurrence $2,000,000 Aggregate

.4 Personal Injury, with Employment Exclusion deleted:

$2,000,000 Aggregate

.5 Business Auto Liability (including owned, non-owned and hired vehicles):

(a)	Bodily Injury	$1,000,000 Each Person $1,000,000 Each Occurrence
(b)	Property Damage	$1,000,000 Each Occurrence

.6 If the General Liability Coverages are provided by a Commercial Liability policy, the:

(a) General Aggregate shall be not less than $ 4,000,000 and it shall apply, in total, to this Project only.

(b) Fire Damage Limit shall be not less than $ 2,000,000 on any one fire.

(c) Medical Expense Limit shall be not less than $10,000 on any one person.

.7 Umbrella Excess Liability:

$20,000,000 over primary insurance
$0 retention for self-insured hazards each occurrence.

.8 If an exposure exists, Aircraft Liability (owned and non-owned) and Watercraft Liability (owned and non-owned) with limits approved by the Owner shall be provided.

AIA Document A141™ – 2014 Exhibit B. Copyright © 2004 and 2014 by The American Institute of Architects. All rights reserved. The "American Institute of Architects," "AIA," the AIA Logo, and "AIA Contract Documents" are registered trademarks and may not be used without permission. This document was produced by AIA software at 17:14:36 ET on 04/01/2022 under Order No.2114285436 which expires on 02/22/2023, is not for resale, is licensed for one-time use only, and may only be used in accordance with the AIA Contract Documents® Terms of Service. To report copyright violations, e-mail copyright@aia.org.
User Notes: (929915445)

§ B.2.2 Performance Bond and Payment Bond

The Design-Builder shall provide surety bonds as follows:

(Paragraph deleted)

Type	Sum
Within ten (10) days upon the execution of the Design-Build Amendment, the Design-Builder shall provide: AIA Document A312™ – 2010 Payment Bond and Performance Bond	Each in the amount of 100 percent of the contract sum.

§ B.2.2.1 Upon the request of any person or entity appearing to be a potential beneficiary of bonds covering payment of obligations arising under the Agreement, the Design-Builder shall promptly furnish a copy of the bonds or shall permit a copy to be made.

§ B.2.2.2 The Design-Builder shall furnish the Owner Bonds covering faithful performance of the Contract and payment of obligations arising thereunder with such bonds dated on or before the date of this agreement. The surety company executing the Bonds must hold a certificate of authority as an acceptable surety on Federal Bonds as listed in Treasury Circular 570, as amended, and be authorized to transact business in the State where the Project is located. The Bonds (using the latest AIA forms) shall each be equal to the amount of the Contract Sum. The cost of these Bonds shall be included in the Contract Sum.

§ B.2.2.3 The Design-Builder shall require the attorney-in-fact who executes the required Bonds on behalf of the surety to affix thereto a certified and current power of attorney.

§ B.2.2.4 If at any time a surety on any such Bond is declared bankrupt or loses its right to do business in the State in which the Work is to be performed or is removed from the list of surety companies accepted on Federal Bonds, the Design-Builder shall within ten (10) calendar days after notice from the Owner to do so, substitute an acceptable Bond in such form and sum and signed by such other surety or sureties as may be satisfactory to the Owner. The premiums of such Bond shall be paid by the Design-Builder. No further payment shall be deemed due nor shall be made until the new surety or sureties shall have furnished an acceptable Bond to the Owner.

§ B.2.3 Property Insurance

§ B.2.3.1 Unless otherwise provided, at the time of execution of the Design-Build Amendment, the Design-Builder shall purchase and maintain, in a company or companies lawfully authorized to do business in the jurisdiction where the Project is located, property insurance written on a builder's risk "all-risk" or equivalent policy form in the amount of the initial Contract Sum, plus the value of subsequent Modifications and cost of materials supplied or installed by others, comprising the total value for the entire Project at the site on a replacement cost basis without optional deductibles. If any construction that is part of the Work shall commence prior to execution of the Design-Build Amendment, the Design-Builder shall, prior to commencement of construction, purchase and maintain property insurance as described above in an amount sufficient to cover the total value of the Work at the site on a replacement cost basis without optional deductibles. The insurance required under this section shall include interests of the Owner, Design-Builder, Architect, Consultants, Contractors, and Subcontractors in the Project. The property insurance shall be maintained, unless otherwise provided in the Design-Build Documents or otherwise agreed in writing by all persons and entities who are beneficiaries of the insurance, until the Owner has issued a Certificate of Substantial Completion in accordance with Section 9.8 of the Agreement. Upon issuance of a Certificate of Substantial Completion, the Owner shall replace the insurance policy required under this Section B.2.3 with another property insurance policy written for the total value of the Project that shall remain in effect until expiration of the period for correction of the Work set forth in Section 11.2.2 of the Agreement.

§ B.2.3.1.1 The insurance required under Section B.2.3.1 shall include, without limitation, insurance against the perils of fire (with extended coverage) and physical loss or damage including, without duplication of coverage, theft, vandalism, malicious mischief, collapse, earthquake, flood, windstorm, falsework, testing and startup, temporary buildings and debris removal, including demolition occasioned by enforcement of any applicable legal requirements, and shall cover reasonable compensation for the Design-Builder's services and expenses required as a result of such insured loss.

AIA Document A141™ – 2014 Exhibit B. Copyright © 2004 and 2014 by The American Institute of Architects. All rights reserved. The "American Institute of Architects," "AIA," the AIA Logo, and "AIA Contract Documents" are registered trademarks and may not be used without permission. This document was produced by AIA software at 17:14:36 ET on 04/01/2022 under Order No.2114285436 which expires on 02/22/2023, is not for resale, is licensed for one-time use only, and may only be used in accordance with the AIA Contract Documents® Terms of Service. To report copyright violations, e-mail copyright@aia.org.
User Notes: (929915445)

§ B.2.3.1.2 If the insurance required under Section B.2.3.1 requires deductibles, the Owner shall pay costs not covered because of such deductibles.

§ B.2.3.1.3 The insurance required under Section B.2.3.1 shall cover portions of the Work stored off the site, and also portions of the Work in transit.

§ B.2.3.1.4 Partial occupancy or use in accordance with Section 9.9 of the Agreement shall not commence until the insurance company or companies providing the insurance required under Section B.2.3.1 have consented to such partial occupancy or use by endorsement or otherwise. The Owner and the Design-Builder shall take reasonable steps to obtain consent of the insurance company or companies and shall, without mutual written consent, take no action with respect to partial occupancy or use that would cause cancellation, lapse or reduction of insurance.

ARTICLE B.3 OWNER'S INSURANCE

§ B.3.1 Owner's Liability Insurance

The Owner shall be responsible for purchasing and maintaining the Owner's usual liability insurance.

§ B.3.2 Property Insurance

§ B.3.2.1 This Paragraph Intentionally Deleted.

§ B.3.2.1.1 This Paragraph Intentionally Deleted.

§ B.3.2.1.2 This Paragraph Intentionally Deleted.

§ B.3.2.1.3 This Paragraph Intentionally Deleted.

§ B.3.2.1.4 This Paragraph Intentionally Deleted.

§ B.3.2.2 Boiler and Machinery Insurance. This Paragraph Intentionally Deleted.

§ B.3.2.3 This Paragraph Intentionally Deleted.

§ B.3.2.4 Loss of Use Insurance. At the Owner's option, the Owner may purchase and maintain insurance to insure the Owner against loss of use of the Owner's property due to fire or other hazards, however caused.

§ B.3.2.5 This Paragraph Intentionally Deleted.

§ B.3.2.6 Before an exposure to loss may occur, the Owner shall file with the Design-Builder a copy of each policy that includes insurance coverages required by this Section B.3.2. Each policy shall contain all generally applicable conditions, definitions, exclusions and endorsements related to this Project. The Owner shall provide written notification to the Design-Builder of the cancellation or expiration of any insurance required by this Article B.3. The Owner shall provide such written notice within five (5) business days of the date the Owner is first aware of the cancellation or expiration, or is first aware that the cancellation or expiration is threatened or otherwise may occur, whichever comes first.

§ B.3.2.7 Waivers of Subrogation. The Owner and Design-Builder waive all rights against (1) each other and any of their consultants, subconsultants, contractors and subcontractors, agents and employees, each of the other, and (2) any separate contractors described in Section 5.13 of the Agreement, if any, and any of their subcontractors, sub-subcontractors, agents and employees, for damages caused by fire or other causes of loss to the extent covered by property insurance obtained pursuant to Section B.3.2 or other property insurance applicable to the Work and completed construction, except such rights as they have to proceeds of such insurance held by the Owner as fiduciary. The Owner or Design-Builder, as appropriate, shall require of the separate contractors described in Section 5.13 of the Agreement, if any, and the subcontractors, sub-subcontractors, agents and employees of any of them, by appropriate agreements, written where legally required for validity, similar waivers each in favor of the other parties enumerated herein. The policies shall provide such waivers of subrogation by endorsement or otherwise. A waiver of subrogation shall be effective as to a person or entity even though that person or entity would otherwise have a duty of indemnification, contractual or otherwise, did not pay the insurance premium directly or indirectly, and whether or not the person or entity had an insurable interest in the property damaged.

Init.
/
AIA Document A141™ – 2014 Exhibit B. Copyright © 2004 and 2014 by The American Institute of Architects. All rights reserved. The "American Institute of Architects," "AIA," the AIA Logo, and "AIA Contract Documents" are registered trademarks and may not be used without permission. This document was produced by AIA software at 17:14:36 ET on 04/01/2022 under Order No.2114285436 which expires on 02/22/2023, is not for resale, is licensed for one-time use only, and may only be used in accordance with the AIA Contract Documents® Terms of Service. To report copyright violations, e-mail copyright@aia.org.
User Notes: (929915445)

§ B.3.2.8 A loss insured under the Owner's property insurance shall be adjusted by the Owner as fiduciary and made payable to the Owner as fiduciary for the insureds, as their interests may appear, subject to requirements of any applicable mortgagee clause and of Section B.3.2.10. The Design-Builder shall pay the Architect, Consultants and Contractors their just shares of insurance proceeds received by the Design-Builder, and by appropriate agreements, written where legally required for validity, the Design-Builder shall require the Architect, Consultants and Contractors to make payments to their consultants and subcontractors in similar manner.

§ B.3.2.9 If required in writing by a party in interest, the Owner as fiduciary shall, upon occurrence of an insured loss, give bond for proper performance of the Owner's duties. The cost of required bonds shall be charged against proceeds received as fiduciary. The Owner shall deposit in a separate account proceeds so received, which the Owner shall distribute in accordance with such agreement as the parties in interest may reach, or as determined in accordance with the method of binding dispute resolution selected in the Agreement between the Owner and Design-Builder. If after such loss no other special agreement is made and unless the Owner terminates the Contract for convenience, replacement of damaged property shall be performed by the Design-Builder after notification of a Change in the Work in accordance with Article 6 of the Agreement.

§ B.3.2.10 The Owner as fiduciary shall have power to adjust and settle a loss with insurers unless one of the parties in interest shall object in writing within five days after occurrence of a loss to the Owner's exercise of this power. If an objection is made, the dispute shall be resolved in the manner selected by the Owner and Design-Builder as the method of binding dispute resolution in the Agreement. If the Owner and Design-Builder have selected arbitration as the method of binding dispute resolution, the Owner as fiduciary shall make settlement with insurers or, in the case of a dispute over distribution of insurance proceeds, in accordance with the directions of the arbitrators.

ARTICLE B.4 SPECIAL TERMS AND CONDITIONS

Special terms and conditions that modify this Insurance and Bonds Exhibit, if any, are as follows:

None.

Init.
/

AIA Document A141™ – 2014 Exhibit B. Copyright © 2004 and 2014 by The American Institute of Architects. All rights reserved. The "American Institute of Architects," "AIA," the AIA Logo, and "AIA Contract Documents" are registered trademarks and may not be used without permission. This document was produced by AIA software at 17:14:36 ET on 04/01/2022 under Order No.2114285436 which expires on 02/22/2023, is not for resale, is licensed for one-time use only, and may only be used in accordance with the AIA Contract Documents® Terms of Service. To report copyright violations, e-mail copyright@aia.org.
User Notes: (929915445)

CORE CONSTRUCTION

EXHIBIT C
DESIGN-BUILDER'S KEY TEAM MEMBERS HOURLY RATES

The following agreed to hourly rates will be used to determine and define "Actual Costs". The Actual Costs for each of the agreed to rates includes all normal and customary payroll paid by the Contractor plus all fringe benefits, taxes and insurances.

Name / Firm	Position	Preconstruction Hourly Rate	Construction Hourly Rate
CORE West, Inc.			
Travis Coombs	Design-Build Lead	$120/Hr	
Michael Keller	Director of PreCon	$120/Hr	
Brandon Whipple	Project Manager	$115/Hr	
Ronnie Triglia	Superintendent	$115/Hr	
TSK Architects			
Pat Pusich	Design Principal In Charge	$225/Hr	
Kevin Kemner	Design Lead - Community Center	$175/Hr	
Chris Lujan	Design Lead - Fire Station	$175/Hr	
Michael Clay Corp.			
Mike Sheppard	Cost Control/Budgeting Lead	$120/Hr	
Summit Engineering			
Nitin Bhakta	VP of Engineering	$140/Hr	
Thomas Hannum	Geotechnical Engineer	$130/Hr	$100/Hr
Brian Houston	Survey Project Manager	$100/Hr	
Kimley-Horn			
Matt Myres	Mechanical Engineer	$230/Hr	
Juan Fuentes	Structural QA/QC	$230/Hr	
Christine Herrick	Structural Engineer	$188/Hr	
Jensen Engineering			
George Jensen	Electrical Engineer	$175/Hr	

EXHIBIT D OWNERS DESIGN REQUIRMENTS
City of West Wendover Fire Station

PHASE 1A and 1B SCOPE OF WORK

PHASE 1 PROGRAM SCOPE OF SERVICES

1.1 SUMMARY OF WORK

A. This Section sets forth the Scope of Work, the Deliverables, and the execution activities for Phase 1.

1.2 PHASE 1 SCOPE

A. Design Builder shall review, analyze, the Owner Provided Information, the Initial Basis of Design Documents, and the Project Schedule.

B. Design Builder shall conduct such site investigations, environmental assessments, review of regulatory and legal authority and restrictions, and all other actions and review and assess other information as reasonably necessary to verify the Owner Provided Information.

C. Design Builder shall review and analyze the concepts for the Project elements as shown in the Initial Basis of Design Documents. In addition, Design Builder shall work collaboratively with the Owner and the Stakeholders to examine whether new concepts will better maximize the Owner's Project Goals and achieve Design Excellence, and if approved by the Owner, further develop such new concepts and incorporate them into the Project.

D. Design-Builder will study the sustainability objectives as stated in the Initial Basis of Design Documents to advise the Owner on the requirements to achieve USGBC LEED Silver certification.

E. Design Builder shall engage and work collaboratively with the Owner and the Project Stakeholders to obtain input regarding the Project design and functionality, as well as other major Project elements and to develop the Final Basis of Design Documents.

F. Design Builder shall engage and work collaboratively with the Owner and the Project Stakeholders to progress the design to a sufficient state to develop the Final Basis of Design Documents, the Guaranteed Maximum Price, and the Project Schedule.

G. Design Builder shall provide the Deliverables during Phase 1 as set forth in Sections 2.01.A. and B. herein. Deliverables shall be provided in a format acceptable to the Owner. Design Builder must utilize the following programs, as applicable.

H. At the conclusion of Phase 1A the Design-Builder shall provide the deliverables set forth herein, including the Phase 1A Report.

I. At the conclusion of Phase 1B the Design Builder shall prepare a GMP Proposal that includes all Phase 2 Deliverables and is consistent with any modifications and/or clarifications to the Initial Basis of Design Documents.

1.3 PRELIMINARY DESIGN PHASE 1A SCHEMATIC DESIGN: .

A. Design Builder shall perform such assessments, reviews and investigations of the Owner Provided Information, as determined by Design Builder for the Project Requirements. Additional reviews, assessments and investigations of Owner Provided Information shall include, if reasonably necessary, the following:

1. Review of the As-Built drawings and other architectural and engineering drawings, plans and specifications,
2. Constructability, including proposed methods of construction, of the proposed structures in the Initial Basis of Design Documents,
3. Review of the architectural, engineering and other assumptions and calculations in any Owner Provided Information,
4. Review of actual site conditions as set forth below,
5. Review of any surveys,
6. Review and assessment of all applicable legal and regulatory rules and restrictions on the Project, including consultation with permit authorities regarding their requirements.
7. Review of assumptions regarding the establishment of the Commercial Terms, including but not limited to the GMP, the Project Schedule, and the Final Basis of Design Documents.

B. Design Builder shall perform site investigations as necessary for Design Builder of the Owner Provided Information the Commercial Terms and the Owner Project Requirements. Design Builder shall visit the Site and examine thoroughly the nature and extent of the Work, site, locality, actual conditions, as-built conditions, and all local conditions and federal, state, and local laws and regulations that in any manner may affect cost, time, progress, performance or furnishing of the Work or which relate to any aspect of the design and the means, methods, techniques, sequences or procedures of construction to be employed by Design Builder and safety precautions and programs incident thereto. Such additional investigations shall be conducted to sufficiently identify or characterize utility locations, site conditions, contaminated materials, and observable or concealed conditions in the existing facilities, including but not limited to the following:

1. Develop requirements for survey by the Owner and submit them to the Owner at least two (2) weeks prior to the need for the survey results.
2. Undertake surveys, investigations and analysis to provide necessary data and information for project design including sufficient information to evaluate design alternatives.
3. Perform soils sampling, testing, and analysis to provide necessary data and information for Project design and provide a final Geotechnical Report. Test for contamination during this process.
4. Subsurface investigation work, including the disturbance of existing vegetation, cannot proceed until all required permits have been obtained.

C. Design Builder will conduct or obtain and understand all such examinations, investigations, explorations, tests, reports and studies, in addition to or to supplement those referred to above, that pertain to the subsurface conditions, as-built conditions, underground facilities and all other physical conditions at or contiguous to the Site or otherwise that may affect the cost, time, progress, performance or furnishing of Work, as Design Builder considers necessary for the performance or furnishing of Work for the Commercial Terms and in accordance with the Owner Project Requirements as well as other terms and conditions of the Contract Documents; and no additional examinations, investigations, explorations, tests, reports, studies or similar information or data are or will be required from the Owner by Design Builder for such purposes.

D. All reports or analyses generated by Design Builder's testing, inspections, and investigations, including but not limited to geotechnical evaluations and hazardous materials studies, shall be provided to the Owner promptly, within seven (7) business days, after such reports are analyzed and generated

E. Design Builder shall be responsible for ensuring that its design documents and construction work accurately conforms to, and interfaces with, the existing conditions and shall not request a change or claim for unforeseen or concealed conditions except as provided under the provisions of the contract.

F. Phase 1A Report: At the conclusion of Phase 1A, the Design-Builder shall provide a report with the following Deliverables:

1. 30 percent design for Fire Station
    - including but not limited to the following elements:
    - 30 Percent Design Documents for Fire Station
    - 90 Percent Design /Permit Documents for any Temporary Facilities
    - Development Plan for the Basis of Design Documents submitted with the GMP Proposal, which includes the required deliverables for each facility.
    - The Owner and Design-Builder shall work collaboratively to develop the 30 Percent Design Documents shall include the elements set forth below.
2. A Target Budget for the Preliminary Design Phase 1B:

1.4 PHASE 1 B DEVELOPMENT OF FINAL BASIS OF DESIGN DOCUMENTS

A. Design Builder shall manage the design process in a collaborative, efficient, and coordinated manner and conduct design workshops as required by the Contract Documents. The Final Basis of Design Documents will establish the scope of the Work and provide the basis for the GMP. The Final Basis of Design Documents must be consistent with the Initial Basis of Design Documents, unless the Owner has consented to modify its requirements in writing through a Change Order, Field Directive, or other written means allowed by the Contract Documents.

B. Design Builder shall provide for an orderly and timely approval process by the Owner and third parties, document review comments from the Owner and third parties, and take appropriate action.

C. The Owner will review and comment on the Design Materials in a timely fashion. The Design-Builder will allow adequate time for the Owner to review the Design Materials, which shall not be less than 15 business days.

D. Design Builder shall submit a written response to the Owner's design review comments, describing the action taken for each comment. Design Builder shall, in a timely fashion, bring to the attention of the Owner areas where new technologies or Design-Build processes may require modifications to these requirements.

E. By submitting Design Materials, Design Builder represents to the Owner that the Design Materials may be designed and constructed for the then current Commercial Terms and in accordance with the Initial Basis of Design Documents. Notwithstanding the above, Design Builder may propose Designs, Plans or other Submissions that may alter a Commercial Term or the Initial Basis of Design Documents; however, with any such Design Materials, Design Builder must provide notice pursuant to Section 10 of the General Conditions.

1.5 DEVELOPMENT OF Guaranteed Maximum Price (GMP)

A. The forecasting and development of accurate project cost estimates throughout each phase of the Project is vital to the Owner's financial management strategy. The Owner relies on the Design Builder to provide and validate current and detailed cost estimates and forecasts that will be incorporated into the overall cost controls for the Owner.

B. Throughout the Project, Design Builder will update estimates and forecasts and provide data to the Owner to reflect real time information. Design Builder will provide all pricing, estimates and other data used to develop the Commercial Terms on an open and transparent basis. The project controls system used by the Design Builder shall be acceptable to the Owner and will be capable of being broken down and reported in a number of different work breakdown structures, including but not limited to organizing the financial data by cost element codes, subcontracts, vendors, Construction Document packages, etc.

C. The Design Builder will coordinate the development of the GMP with the development of the Final Basis of Design Documents as well as the Project Schedule so that the Owner may obtain an accurate GMP within the Project Budget.

1. Design Builder shall highlight any material differences between the Final Basis of Design Documents as they are being developed and the Initial Basis of Design Documents.

2. In the event that the Owner has any comments relative to the Design Materials or finds any inconsistencies from the Initial Basis of Design Documents or inaccuracies in the Design Materials, it shall give prompt written notice of such comments or findings to Design Builder, who shall make appropriate adjustments to the proposed Final Basis of Design Documents.

3. The parties will work collaboratively to make adjustments in the Design Materials and in the proposed Final Basis of Design Documents to fit within the Owner's Project Goals.

B. Final Basis of Design Documents. The Owner and Design Builder shall work collaboratively to develop the Final Basis of Design Documents provided as part of the GMP Proposal. The Final Basis of Design Documents submitted with the GMP Proposal shall be determined during Phase 1A and shall include at a minimum the following documents and set forth the assumptions and clarifications on which the GMP Proposal and Project Schedule are based.

END OF DOCUMENT

USDA
Form RD 400-6
(Rev.12-09)

Form Approved
OMB No. 0575-0018

COMPLIANCE STATEMENT

This statement relates to a proposed contract with _____

_____,
(Name of borrower or grantee)

who expects to finance the contract with assistance from either the Rural Housing Service (RHS), Rural Business-Cooperative Service (RBS), or the Rural Utilities Service (RUS) or their successor agencies, United States Department of Agriculture (whether by a loan, grant, loan insurance, guarantee, or other form of financial assistance). I am the undersigned bidder or prospective contractor, I represent that:

1. I ☐ have, ☐ have not, participated in a previous contract or subcontract subject to Executive Order 11246 (regarding equal employment opportunity) or a preceding similar Executive Order.

2. If I have participated in such a contract or subcontract, I ☐ have, ☐ have not, filed all compliance reports that have been required to file in connection with the contract or subcontract.

☐ If the proposed contract is for $50,000 or more: or ☐ If the proposed nonconstruction contract is for $50,000 or more and I have 50 or more employees, I also represent that:

3. I ☐ have, ☐ have not previously had contracts subject to the written affirmative action programs requirements of the Secretary of Labor.

4. If I have participated in such a contract or subcontract, ☐ I have, ☐ have not developed and placed on file at each establishment affirmative action programs as required by the rules and regulations of the Secretary of Labor.

I understand that if I have failed to file any compliance reports that have been required of me, I am not eligible and will not be eligible to have my bid considered or to enter into the proposed contract unless and until I make an arrangement regarding such reports that is satisfactory to either the RHS, RBS or RUS, or to the office where the reports are required to be filed.

I also certify that I do not maintain or provide for my employees any segregated facilities at any of my establishments, and that I do not permit my employees to perform their services at any location, under my control, where segregated facilities are maintained. I certify further that I will not maintain or provide for my employees any segregated facilities at any of my establishments, and that I will not permit my employees to perform their services at any location, under my control, where segregated facilities are maintained. I agree that a breach of this certification is a violation of the Equal Opportunity clause in my contract. As used in this certification, the term "segregated facilities" means any waiting rooms, work areas, restrooms and wash rooms, restaurants and other eating areas time clocks, locker rooms and other storage or dressing areas, parking lots, drinking fountains, recreation or entertainment areas, transportation, and housing facilities provided for employees which are segregated by explicit directive or are in fact segregated on the basis of race, creed, color, or national origin, because of habit, local custom, or otherwise. I further agree that (except where I have obtained identical certifications for proposed subcontractors for specific time periods) I will obtain identical certifications from proposed subcontractors prior to the award of subcontracts exceeding $10,000 which are not exempt from the provisions of the Equal Opportunity clause; that I will retain such certifications in my files; and that I will forward the following notice to such proposed subcontractors (except where the proposed subcontractors have submitted identical certifications for specific time periods):

According to the Paperwork Reduction Act of 1995, an agency may not conduct or sponsor, and a person is not required to respond to a collection of information unless it displays the valid OMB control number. The valid OMB control number for this information collection is 0575-0018. The time required to complete this information collection is estimated to average 10 minutes per response, including the time for reviewing instructions, searching existing data sources, gathering and maintaining the data needed, and completing and reviewing the collection of information.

NOTICE TO PROSPECTIVE SUBCONTRACTORS OF REQUIREMENTS FOR CERTIFICATIONS OF NON-SEGREGATED FACILITIES

A certification of Nonsegregated Facilities, as required by the May 9, 1967, order (32F.R. 7439, may 19, 1967) on Elimination of Segregated Facilities, by the Secretary of Labor, must be submitted prior to the award of a subcontract exceeding $ 10,000 which is not exempt from the provisions of the Equal Opportunity clause. The certification may be submitted either for each subcontract or for all subcontracts during a period (i.e., quarterly, semiannually, or annually).

NOTE: The penalty for making false statements in offers is prescribed in 18 U.S.C. 1001.

DATE _____

_____

(Signature of Bidder or Prospective Contractor)

_____

Address (including Zip Code)

This form is available electronically.

OMB Control No. 0505-0027
Expiration Date: 04/30/2022

Certification Regarding Debarment, Suspension, Ineligibility and Voluntary Exclusion Lower Tier Covered Transactions — AD-1048

The following statement is made in accordance with the Privacy Act of 1974 (5 U.S.C. § 552a, as amended). This certification is required by the regulations implementing Executive Order 12549, Debarment and Suspension, and 2 C.F.R. §§ 180.300, 180.335, Participants' responsibilities. The regulations were amended and published on August 31, 2005, in 70 Fed. Reg. 51865-51880. Copies of the regulations may be obtained by contacting the Department of Agriculture agency offering the proposed covered transaction.

According to the Paperwork Reduction Act of 1995 an agency may not conduct or sponsor, and a person is not required to respond to a collection of information unless it displays a valid OMB control number. The valid OMB control number for this information collection is 0505-0027. The time required to complete this information collection is estimated to average 15 minutes per response, including the time for reviewing instructions, searching existing data sources, gathering and maintaining the data needed, and completing and reviewing the collection of information. The provisions of appropriate criminal, civil, fraud, privacy, and other statutes may be applicable to the information provided.

(Read instructions on page two before completing certification.)

A. The prospective lower tier participant certifies, by submission of this proposal, that neither it nor its principals is presently debarred, suspended, proposed for debarment, declared ineligible, or voluntarily excluded from participation in this transaction by any Federal department or agency;

B. Where the prospective lower tier participant is unable to certify to any of the statements in this certification, such prospective participant shall attach an explanation to this proposal.

ORGANIZATION NAME	PR/AWARD NUMBER OR PROJECT NAME

NAME(S) AND TITLE(S) OF AUTHORIZED REPRESENTATIVE(S)	
SIGNATURE(S)	DATE

In accordance with Federal civil rights law and U.S. Department of Agriculture (USDA) civil rights regulations and policies, the USDA, its agencies, offices, and employees, and institutions participating in or administering USDA programs are prohibited from discriminating based on race, color, national origin, religion, sex, gender identity (including gender expression), sexual orientation, disability, age, marital status, family/parental status, income derived from a public assistance program, political beliefs, or reprisal or retaliation for prio civil rights activity, in any program or activity conducted or funded by USDA (not all bases apply to all programs). Remedies and complaint filing deadlines vary by program or incident.

Persons with disabilities who require alternative means of communication for program information (e.g., Braille, large print, audiotape, American Sign Language, etc.) should contact the responsible agency or USDA's TARGET Center at (202) 720-2600 (voice and TTY) or contact USDA through the Federal Relay Service at (800) 877-8339. Additionally, program information may be made available in languages other than English.

To file a program discrimination complaint, complete the USDA Program Discrimination Complaint Form, AD-3027, found online at How to File a Program Discrimination Complaint (https://www.ascr.usda.gov/filing-program-discrimination-complaint-usda-customer) and at any USDA office or write a letter addressed to USDA and provide in the letter all of the information requested in the form. To request a copy of the complaint form, call (866) 632-9992. Submit your completed form or letter to USDA by: (1) mail: U.S. Department of Agriculture, Office of the Assistant Secretary for Civil Rights, 1400 Independence Avenue, SW, Washington, D.C. 20250-9410; (2) fax: (202) 690-7442.

Instructions for Certification

(1) By signing and submitting this form, the prospective lower tier participant is providing the certification set out on page 1 in accordance with these instructions.

(2) The certification in this clause is a material representation of fact upon which reliance was placed when this transaction was entered into. If it is later determined that the prospective lower tier participant knowingly rendered an erroneous certification, in addition to other remedies available to the Federal Government, the department or agency with which this transaction originated may pursue available remedies, including suspension or debarment.

(3) The prospective lower tier participant shall provide immediate written notice to the person(s) to which this proposal is submitted if at any time the prospective lower tier participant learns that its certification was erroneous when submitted or has become erroneous by reason of changed circumstances.

(4) The terms "covered transaction," "debarred," "suspended," "ineligible," "lower tier covered transaction," "participant," "person," "primary covered transaction," "principal," "proposal," and "voluntarily excluded," as used in this clause, have the meanings set out in the Definitions and Coverage sections of the rules implementing Executive Order 12549, at 2 C.F.R. Parts 180 and 417. You may contact the department or agency to which this proposal is being submitted for assistance in obtaining a copy of those regulations.

(5) The prospective lower tier participant agrees by submitting this form that, should the proposed covered transaction be entered into, it shall not knowingly enter into any lower tier covered transaction with a person who is debarred, suspended, declared ineligible, or voluntarily excluded from participation in this covered transaction, unless authorized by the department or agency with which this transaction originated.

(6) The prospective lower tier participant further agrees by submitting this form that it will include this clause titled "Certification Regarding Debarment, Suspension, Ineligibility and Voluntary Exclusion - Lower Tier Covered Transactions," without modification, in all lower tier covered transactions and in all solicitations for lower tier covered transactions.

(7) A participant in a covered transaction may rely upon a certification of a prospective participant in a lower tier covered transaction that is not debarred, suspended, ineligible, or voluntarily excluded from the covered transaction, unless it knows that the certification is erroneous. A participant may decide the method and frequency by which it determines the eligibility of its principals. Each participant may, but is not required to, check the System for Award Management (SAM) database.

(8) Nothing contained in the foregoing shall be construed to require establishment of a system of records to render in good faith the certification required by this clause. The knowledge and information of a participant is not required to exceed that which is normally possessed by a prudent person in the ordinary course of business dealings.

(9) Except for transactions authorized under paragraph (5) of these instructions, if a participant in a covered transaction knowingly enters into a lower tier covered transaction with a person who is suspended, debarred, ineligible, or voluntarily excluded from participation in this transaction, in addition to other remedies available to the Federal Government, the department or agency with which this transaction originated may pursue available remedies, including suspension and/or debarment.

Approved by OMB No. 0348-0046

DISCLOSURE OF LOBBYING ACTIVITIES

Complete this form to disclose lobbying activities pursuant to 31 U.S.C. 1352
(See Reverse for public burden disclosure.)

1. Type of Federal Action:	2. Status of Federal Action:	3. Report Type:
☐ a. contract b. grant c. cooperative agreement d. loan e. loan guarantee f. loan insurance	☐ a. bid/offer/application b. initial award c. post-award	☐ a. initial filing b. material change **For Material Change Only:** year _____ quarter _____ date of last report _____

4. Name and Address of Reporting Entity:	5. If Reporting Entity in No. 4 is a Subawardee, Enter Name and Address of Prime:
☐ Prime ☐ Subawardee Tier _____, *if known:* **Congressional District,** *If known:*	**Congressional District,** *If known:*
6. Federal Department/Agency:	**7. Federal Program Name/Description:** CFDA Number, *if applicable*:
8. Federal Action Number, *If known:*	**9. Award Amount,** *If known:* $
10. a. Name and Address of Lobbying Registrant *(If individual, last name, first name, MI):*	**b. Individuals Performing Services** *(Including address if different from No. 10a)* *(last name, first name, MI):*
11. Information requested through this form is authorized by title 31 U.S.C. section 1352. This disclosure of lobbying activities is a material representation of fact upon which reliance was placed by the tier above when this transaction was made or entered into. This disclosure is required pursuant to 31 U.S.C. 1352. This information will be reported to the Congress semi-annually and will be available for public inspection. Any person who fails to file the required disclosure shall be subject to a civil penalty of not less that $10,000 and not more than $100,000 for each such failure.	Signature: _____ Print Name: _____ Title: _____ Telephone No.: _____ Date: _____

Federal Use Only:

Authorized for Local Reproduction
Standard Form LLL (Rev. 7-97)

INSTRUCTIONS FOR COMPLETION OF SF-LLL, DISCLOSURE OF LOBBYING ACTIVITIES

This disclosure form shall be completed by the reporting entity, whether subawardee or prime Federal recipient, at the initiation or receipt of a covered Federal action, or a material change to a previous filing pursuant to title 31 U.S.C. section 1352. The filing of a form is required for each payment or agreement to make payment to any lobbying entity for influencing or attempting to influence an officer or employee of any agency, a Member of Congress, an officer or employee of Congress, or an employee of a Member of Congress in connection with a covered Federal action. Complete all items that apply for both the initial filing and material change report. Refer to the implementing guidance published by the Office of Management and Budget for additional information.

1. Identify the type of covered Federal action for which lobbying activity is and/or has been secured to influence the outcome of a covered Federal action.

2. Identify the status of the covered Federal action.

3. Identify the appropriate classification of this report. If this a followup report caused by a material change to the information previously reported, enter the year and quarter in which the change occurred, Enter the date of the last previously submitted report by this reporting entity for this covered Federal action.

4. Enter the full name, address, city, State and zip code of the reporting entity. Include Congressional District, if known. Check the appropriate classification of the reporting entity that designates if it is, or expects to be a prime or subaward receipt. Identify the tier of the subawardee, e.g., the first subawardee of the prime is the 1st tier. Subawards include but are not limited to subcontracts, subgrants and contract awards under grants.

5. If the organization filing the report in item 4 checks :Subawardee," then enter the full name, address, city, State and zip code of the prime Federal recipient. Include Congressional District, if known.

6. Enter the name of the Federal agency making the award or loan commitment. Include at least one organizational level below agency name, if known. For example, Department of Transportation, United States Coast Guard.

7. Enter the Federal program name or description for the covered Federal action (Item 1). If known, enter the full Catalog of Federal Domestic Assistance (CFDA) number for grants, cooperative agreements, loans and loan commitments.

8. Enter the most appropriate Federal identifying number available for the Federal action identified in Item 1 (e.g., Request for Proposal (RFP) number; Invitation for bid (IFB) number; grant announcement number; the contract, grant, or loan award number; the application/proposal control number assigned by the Federal agency). Include prefixes, e.g. "RFP-DE-90-001."

9. For a covered Federal action where there has been an award or loan commitment by the Federal agency, enter the Federal amount of the award/loan commitment for the prime entity identified in Item 4 or 5.

10. (a) Enter the full name, address, city, State and zip code of the lobbying registrant under the Lobbying Disclosure Act of 1995 engaged by the reporting entity identified in Item 4 to influence the covered Federal action.

    (b) Enter the full names of the individual(s) performing services, and include full address if different from 10 (a). Enter Last Name, First Name and Middle Initial (MI).

11. Certifying official shall sign and date the form, print his/her name, title and telephone number.

According to the Paperwork Reduction Act, as amended, no persons are required to respond to a collection of information unless it displays a valid OMB Control Number. The valid OMB control number for this information collection is OMB No. 0348-0046. Public reporting burden for this collection of information is estimated to average 10 minutes per response, including time for reviewing instructions, searching existing data sources, gathering and maintaining the data needed, and completing and reviewing the collection of information. Send comments regarding the burden estimate or any other aspect of this collection of information, including suggestions for reducing this burden, to the Office of Management and Budget, Paperwork Reduction Project (0348-0046), Washington, DC 20503.

CERTIFICATION FOR CONTRACTS, GRANTS AND LOANS

The undersigned certifies, to the best of his or her knowledge and belief, that:

1. No Federal appropriated funds have been paid or will be paid, by or on behalf of the undersigned, to any person for influencing or attempting to influence an officer or employee of any agency, a Member of Congress, an officer or employee of Congress, or an employee of a Member of Congress in connection with the awarding of any Federal contract, the making of any Federal grant or Federal loan, and the extension, continuation, renewal, amendment, or modification of any Federal contract, grant or loan.

2. If any funds other than Federal appropriated funds have been paid or will be paid to any person for influencing or attempting to influence an officer or employee of any agency, a Member of Congress, an officer or employee of Congress, or an employee of a Member of Congress in connection with this Federal contract, grant or loan, the undersigned shall complete and submit Standard Form - LLL, "Disclosure of Lobbying Activities," in accordance with its instructions.

3. The undersigned shall require that the language of this certification be included in the award documents for all subawards at all tiers (including contracts, subcontracts, and subgrants under grants and loans) and that all subrecipients shall certify and disclose accordingly.

This certification is a material representation of fact upon which reliance was placed when this transaction was made or entered into. Submission of this certification is a prerequisite for making or entering into this transaction imposed by section 1352, title 31, U.S. Code. Any person who fails to file the required certification shall be subject to a civil penalty of not less than $10,000 and not more than $100,000 for each such failure.

_____ _____

(name) (date)

_____

(title)

oOo

(08-21-91) PN 171

Certification Regarding
Debarment, Suspension, Ineligibility and Voluntary Exclusion
Lower Tier Covered Transactions

This certification is required by the regulations implementing Executive Order 12549, Debarment and Suspension, 13 CFR Part 145. The regulations were published as Part VII of the May 26, 1988 *Federal Register* (pages 19160-19211). Copies of the regulations may be obtained by contacting the person to which this proposal is submitted.

(BEFORE COMPLETING CERTIFICATION, READ INSTRUCTIONS ON REVERSE)

(1) The prospective lower tier participant certifies, by submission of this proposal, that neither it nor its principals are presently debarred, suspended, proposed for disbarment, declared ineligible, or voluntarily excluded from participation in this transaction by any Federal department or agency.

(2) Where the prospective lower tier participant is unable to certify to any of the statements in this certification, such prospective participant shall attach an explanation to this proposal.

Business Name _____

Date _____ By _____
Name and Title of Authorized Representative

_____
Signature of Authorized Representative

INSTRUCTIONS FOR CERTIFICATION

1. By signing and submitting this proposal, the prospective lower tier participant is providing the certification set out below.

2. The certification in this clause is a material representation of fact upon which reliance was placed when this transaction was entered into. If is later determined that the prospective lower tier participant knowingly rendered an erroneous certification, in addition to other remedies available to the Federal Government, the department or agency with which this transaction originated may pursue available remedies, including suspension and/or debarment.

3. The prospective lower tier participant shall provide immediate written notice to the person to which this proposal is submitted if at any time the prospective lower tier participant learns that its certification was erroneous when submitted or has become erroneous by reason of changed circumstances.

4. The terms "covered transaction," "debarred," "suspended," "ineligible," "lower tier covered transaction," "participant," "person," "primary covered transaction," "principal," "proposal," and "voluntarily excluded," as used in this clause, have the meanings set out in the Definitions and Coverage sections of the rules implementing Executive Order 12549. You may contact the person to which this proposal is submitted for assistance in obtaining a copy of those regulations (13CFR Part 145).

5. The prospective lower tier participant agrees by submitting this proposal that, should the proposed covered transaction be entered into, it shall not knowingly enter into any lower tier covered transaction with a person who is debarred, suspended, declared ineligible, or voluntarily excluded from participation in this covered transaction, unless authorized by the department or agency with which this transaction originated.

6. The prospective lower tier participant further agrees by submitting this proposal that it will include the clause titled "Certification Regarding Debarment, Suspension, Ineligibility and Voluntary Exclusion--Lower Tier Covered Transactions," without modification, in all lower tier covered transactions and in all solicitations for lower tier covered transactions.

7. A participant in a covered transaction may rely upon a certification of a prospective participant in a lower tier covered transaction that is not deas it knows that the certification is erroneous. A participant may decide the method and frequency by which it determines the ineligibility of its principals. Each participant may, but is not required to, check the Nonprocurement List.

8. Nothing contained in the foregoing shall be construed to require establishment of a system of records in order to render in good faith the certification required by this clause. The knowledge and information of a participant is not required to exceed that which is normally possessed by a prudent person in the ordinary course of business dealings.

9. Except for transactions authorized under paragraph 5 of these instructions, if a participant in a covered transaction knowingly enters into a lower tier covered transaction with a person who is suspended, debarred, ineligible, or voluntarily excluded from participation in this transaction, in addition to other remedies available to the Federal Government, the department or agency with which this transaction originated may pursue available remedies, including suspension and/or debarment.

Revisions made pursuant to this document have been notated as "USDA" Text will be in this shade of Blue

ATTACHMENT TO AIA DOCUMENT A141-2014, *Standard Form of Agreement Between Owner and Design-Builder*

The provisions of this Attachment shall delete, modify and supplement the provisions contained in the "*Standard Form of Agreement between Owner and Design-Builder*", AIA Document A141 – 2014 Edition. The provisions contained in this Attachment will supercede any conflicting provisions of the AIA Document. **The term "Agency", as used in this Attachment, shall mean the United States of America, acting through the United States Department of Agriculture.**

ARTICLE 1: General Provisions

Modify paragraph 1.1 by inserting the words "and is concurred with by the Agency" after "Owner's Criteria" in the first sentence.

Modify paragraph 1.1.7 by inserting the following sentences in subparagraph 1.1.7.4:

If the Work is not substantially complete on or before this date, or within this period of time, or extension thereof granted by the Owner, the Design-Builder shall pay to the Owner liquidated damages in the sum of $_____ for each calendar day of delay. Any sums that may be due the Owner as liquidated damages may be deducted from any monies due or to become due the Design-Builder under the Contract or may be collected from the Design-Builder's surety.

Modify paragraph 1.1.11 by inserting the words ", the Agency," after "Owner" in the second sentence.

Add the following subparagraphs and clauses to paragraph 1.4:

1.4.16 Agency
The term "Agency", as used in this Attachment, shall mean the United States of America, acting through United States Department of Agriculture.

1.4.17 Independent Inspector
The term "Independent Inspector," as used in this Attachment, shall mean the Inspector independent from the Design-Builder hired by the Owner to represent the Owner's interests. The Agency requires a construction inspector independent of the Design-Builder.

1.4.17.1 The Independent Inspector shall be a representative of and shall advise and consult with the Owner during construction until final payment is due to the Design-Builder, and at the Owner's direction during the period of correction of the Work described in the design/build documents. The Independent Inspector shall furnish consultations necessary to identify

construction defects and correct unforeseen conditions encountered during this period. The Independent Inspector shall assist the Owner in performing a review of the Project during the 11th month after the date of Substantial Completion.

1.4.17.2 The Independent Inspector shall conduct an inspection prior to the issuance of the Acknowledgement of Substantial Completion and shall submit a written report to the Owner, Agency and the Design-Builder about Work to be completed prior to final acceptance. Such services shall be coordinated with the Agency. Prior to submitting the final Application for Payment, the Independent Inspector shall conduct an inspection, submit a Statement of Completion, and receive and forward to the Owner, for the Owner's review and records, written warranties and related documents required by the Contract Documents and assembled by the Design-Builder.

1.4.17.3 Visits to the site shall be documented in writing on standard inspection report forms with copies furnished to the Owner, Design-Builder and Agency. Visits to the site shall be in accordance with Agency requirements and procedures.

ARTICLE 2: Compensation and Progress Payments

Modify subparagraph 2.1.4.1 by inserting the following in the appropriate space:

Interest at 1% per month or 12% per year for pay estimates outstanding for 60 days will be paid to the Design-Builder.

ARTICLE 3: DESIGN/BUILDER

Add the following subparagraph to subparagraph 3.1.3:

3.1.3.3 The Design-Builder shall advise the Owner of required tests, inspections and reports, shall furnish coordination of such tests and inspections, and shall advise the Owner and Agency of the results of same. Copies of test results shall be furnished to the Owner, Owner's Independent Inspector and Agency, as appropriate.

Add the following sentence to subparagraph 3.1.4: "Any extra cost that may result from any such acts and omissions will be the responsibility of the Design-Builder."

Add the following sentence to paragraph 3.1.5: The Design-Builder shall conduct a Preconstruction Conference prior to the beginning of construction to familiarize all parties involved with the necessary work. This meeting shall be held with the Design-Build representative, Owner, Owner's Independent Inspector, Agency representative(s) and other interested parties as appropriate. The Agency 'Record of Preconstruction Conference' may be used to document the meeting.

Add the following subparagraph to subparagraph 3.1.7:

3.1.7.1 The Design-Builder shall consult with the Agency Architect or Engineer about the Agency's requirements and procedures.

Add the following clauses to subparagraph 3.1.8.1:

3.1.8.1.13 The Design-Builder shall conduct on-site pay/progress meetings no less than once a month during the periods of active construction. These meetings shall be held with the Design-Build representative, Owner, Owner's Independent Inspector, Agency representative(s) and other interested parties as appropriate, to review and discuss the application for payment, work progress schedule, construction problems or disputes and other appropriate matters.

In subparagraph 3.1.11.3, add the words "and written concurrence by the Agency has been issued" after "Owner has approved the respective Submittal" and add the following sentence after the first sentence: Two (2) sets of submittals for the Agency are required.

ARTICLE 4: Work Prior to Execution of the Design-Build Amendment

Modify paragraph 4.4.1.2 by deleting "and, if based upon the Cost of the Work plus a fee, a written statement of estimated cost organized by trade categories, allowances, contingencies, Design-Builder's Fee, and other items that comprise the Contract Sum;". Insert a period after method.

ARTICLE 5: Work Following Execution of the Design-Build Amendment

In subparagraph 5.3, add the following subparagraph:

5.3.4 The Design-Builder shall not contract with any person or entity declared ineligible under Federal laws or regulations from participating in federally assisted construction projects for to whom the Owner has made reasonable objection. The Design-Builder shall not be required to contract with anyone to whom the Design-Builder has reasonable objection.

ARTICLE 6: CHANGES IN THE WORK

Insert the word ", Agency" after the word "Owner" in its first occurrence in subparagraph 6.1.2.

Delete subparagraph 6.2 and substitute the following:

6.2 A change order is a written order to the Design-Builder utilizing Form RD 1924-7, "Contract Change Order," signed by the Owner, Independent Inspector, Design-Builder, and the Agency representative. It is issued after the execution of the Contract, authorizing a change in the Work or an adjustment in the Contract Sum or the Contract Time. The Contract Sum and the Contract Time may be changed only by Change Order. The Design-Builder's signing of the change order indicates complete agreement therein.

Add the following sentence to the end of subparagraph 6.3.1: "A Construction Change Directive may be used only for a change in response to an emergency, as described in Paragraph 10.4."

Delete subparagraph 6.3.3.

Delete subparagraph 6.3.5.

Delete subparagraph 6.3.7.

ARTICLE 7: OWNER

Add the following sentence to the end Paragraph 7.1.1:

The Owner shall provide the Design-Builder with Agency standard Contract Document Guides.

ARTICLE 9: PAYMENT APPLICATIONS AND PROJECT COMPLETION

Add the words, "using AIA Document G-702, 'Application and Certificate for Payment' or Form RD 1924-18, 'Partial Payment Estimate'," after "Application for Payment" in the first sentence of subparagraph 9.3.1.

Under subparagraph 9.3.1, add the following subparagraph:

9.3.1.3 The Design-Builder shall obtain Agency concurrence on all Applications of Payment before payment is made.

Add the following sentence to the end of paragraph 9.4: "Agency concurrence is required on all Certificates of Payment before payment is made."

Add the following subparagraph to paragraph 9.6:

9.6.8 No progress payments will be made that deplete the retainage, place in escrow any funds that are required for retainage, or invest the retainage for the benefit of the Design-Builder.

Replace the word "seven" with the word "ten (10)" in the first sentence of subparagraph 9.7.

Add the words ", in collaboration with the Agency Architect or Engineer," after "prepare" in the first sentence of subparagraph 9.8.5.

Delete subparagraph 9.8.6 and substitute the following:

9.8.6 **The certificate of substantial completion shall be submitted by the Design-Builder to the Owner and the Agency for written acceptance of responsibilities assigned to it in the certificate.** When the Work has been substantially completed, except for the work which cannot be completed because of weather conditions, lack of materials or other reasons, which, in the judgment of the Owner, are valid reasons for non-completion, the Owner may make additional payments, retaining at all times an amount sufficient to cover the estimated cost of the work still to be completed.

Delete subparagraph 9.9.1 and substitute the following subparagraphs:

9.9.1 The Design-Builder agrees to the use and occupancy of a portion or unit of the Project before formal acceptance by the Owner under the following conditions:

9.9.1.1 A Certificate of Substantial Completion shall be prepared and executed as provided in subparagraph 9.8.4, except that when, in the opinion of the Inspecting Architect, the Design-Builder is chargeable with unwarranted delay in completing the Work or the Contract requirements, the signature of the Design-Builder will not be required. The Certificate of Substantial Completion shall be accompanied by copies of Design-Builder's insurance policies, written endorsements of the Design-Builder's insurance carrier, and the surety permitting occupancy by the Owner during the remaining period of the Project Work. Occupancy and use by the Owner shall not commence until authorized by public authorities having jurisdiction over the Work.

9.9.1.2 Occupancy by the Owner shall not be construed by the Design-Builder as being an acceptance of that part of the Project to be occupied.

9.9.1.3 The Design-Builder shall not be held responsible for any damage to the occupied part of the Project resulting from the Owner's occupancy.

9.9.1.4 Occupancy by the Owner shall not be deemed to constitute a waiver of existing claims in behalf of the Owner or Design-Builder against each other.

9.9.1.5 If the Project consists of more than one building, and one of the buildings is to be occupied, the Owner, prior to occupancy of that building, shall secure permanent property insurance on the building to be occupied and necessary permits which may be required for use and occupancy.

Add the following subparagraph to the beginning of subparagraph 9.9.2:

With the exception of clause 9.9.1.5, use and occupancy by the Owner prior to Project acceptance does not relieve the Design-

Builder of the responsibility to maintain all insurance and bonds required of the Design-Builder under the Contract Documents until the Project is completed and accepted by the Owner.

Delete subparagraph 9.10.1 and substitute the following:

9.10.1 Upon receipt of written notice that the Work is ready for final inspection and acceptance and upon receipt of a final Application for Payment, the Owner, Owner's Independent Inspector and Agency representative shall promptly make such inspection and, and when the Owner finds the Work acceptable under the Design-Build documents and fully performed, the Owner with Agency concurrence shall, subject to Section A.9.10.2, promptly make final payment to the Design-Builder.

Delete the second and third sentences of subparagraph 9.10.2.

ARTICLE 14: CLAIMS AND DISPUTE RESOLUTION

In subparagraph 14.4.1, delete "shall" and replace with "may" in the first sentence.

Delete subparagraph 14.4.1.1 and substitute the following subparagraphs:

14.4.1.1 The arbitration provisions in this subsection may be initiated by either party to this Contract by filing with the other party a written request for arbitration. The other party may accept or reject the request by filing a written answering statement with the requesting party within fourteen (14) calendar days of the receipt of such request. If the request is accepted the provisions of this section shall apply. If the request is rejected or an answering statement is not filed within the fourteen (14) day period, the provisions in this subsection will not apply.

14.4.1.2 Within fourteen (14) calendar days or any mutually agreeable time period thereafter, each party to this Contract will appoint one arbitrator. Within fourteen (14) calendar days or any mutually agreeable time period thereafter, the two arbitrators will select a third arbitrator. Failure to appoint an arbitrator within the mutually agreeable time periods will terminate further actions under this subsection.

14.4.1.3 The arbitrators will select a hearing location as close to the Owner's locale as possible.

ARTICLE 15: MISCELLANEOUS PROVISIONS

Modify paragraph 15.2.1 by inserting the following at the end:

This Agreement will not become effective until concurred with in writing by the Agency. Such concurrence shall be evidenced by the signature of a duly authorized representative of the Agency in the space provided at the end of this attachment to the Agreement. The concurrence so evidenced by the Agency shall in no way commit the Agency to render financial assistance to the Owner and is without liability to the Agency for payment hereunder.

But in the event such financial assistance is provided, the Agency concurrence shall signify the provisions of this Agreement are consistent with the requirements of the Agency.

Add the following paragraphs 15.9 through 15.13.1 to Article 15.

15.9 EQUAL OPPORTUNITY REQUIREMENTS - Non-discrimination in Employment by Federally Assisted Construction Contractors, by Executive Order 11246.

15.9.1 This section summarized Executive Order 11246, as amended, which prohibits employment discrimination and requires employers holding non-exempt Federal contracts and subcontracts and federally-assisted construction contracts and subcontracts in excess of $10,000 to take affirmative action to ensure equal employment opportunity without regard to race, color, religion, sex, or national origin. The Executive Order requires, as a condition for the approval of any federally assisted construction contract, that the applicant incorporate nondiscrimination and affirmative action clauses into its non-exempt federally assisted construction contracts.

15.9.2 Executive Order 11246, as amended, is administered and enforced by the Office of Federal Contract Compliance Programs (OFCCP), an agency in the U.S. Department of Labor's Employment Standards Administration. OFCCP has issued regulations at 41 CFR chapter 60 implementing the Executive Order. The regulations at 41 CFR part 60-4 establish the procedures which the Agency, as an administering agency, must follow when making grants, contracts, loans, insurance or guarantees involving federally assisted construction which is not exempt from the requirements of Executive Order 11246. The regulations which apply to Federal or federally assisted construction contractors also are published at 41 CFR part 60-4.

15.9.3 OFCCP has established numerical goals for minority and female utilization in construction work. The goals are expressed in percentage terms for the contractor's aggregate workforce in each trade. OFCCP has set goals for minority utilization based on the percentage of minorities in the civilian labor force in the relevant area. There is a single nationwide goal of 6.9 percent for utilization for women. The goals to all construction work in the covered geographic area, whether or not it is federal, federally assisted or non-federal. A notice advises bidders of

the applicable goals for the area where the project is to be located.

15.9.4 Application. This section applies to all of a construction contractor's or subcontractor's employees who are engaged in on-site construction including those construction employees who work on a non-Federal or non-Federally assisted construction site.

15.9.4.1 Agency officials will notify the appropriate Regional Director of OFCCP that an Agency financed construction contract has been awarded, and that the equal opportunity clauses are included in the contract documents.

15.7.4.2 The Regional Director, OFCCP-DOL, will enforce the non-discrimination requirements of Executive Order 11246.

15.9.4.3 The prospective contractor or subcontractor must comply with the Immigration Reform and Control Act of 1986 by completing and retaining Form I-9, "Employment Eligibility Verification," for employees hired. This form is available from the Immigration and Naturalization Service, and Department of Justice.

15.9.4.4 The prospective contractor or subcontractor must submit Form RD 400-6, "Compliance Statement," to the applicant and an Agency official as part of the bid package, prior to any contract bid negotiations and comply with the Executive Order 11246 as stated in the contract documents.

15.10 STATUTES

15.10.1 The Design-Builder and each subcontractor shall comply with the following statutes (and the regulations issued pursuant thereto, which are incorporated herein by reference):

15.10.2 The Design-Builder agrees to abide by the requirements of 2 CFR part 417 and under Executive Order 12549, which pertains to the debarment or suspension of a person from participating in a Federal program or activity. If the total compensation exceeds $25,000, the Design-Builder shall complete the relevant certification form provided by the Owner.

15.10.3 If applicable, the Design-Builder shall comply with Section 319 of Public Law 101-121, as supplemented by the Department of Agriculture regulations (2 CFR part 418and DR 2400-5). This Law pertains to restrictions on lobbying and applies to the recipients of Contracts and Subcontracts that exceed $100,000 at any tier under a Federal loan that exceeds $150,000 or a Federal grant that exceeds $100,000. If applicable, the Design-Builder must complete a certification form on lobbying activities related to a specific Federal loan or grant that is a funding for this Contract. The certification and disclosure forms shall be provided by the Owner.

15.10.4 Copeland Anti-Kickback Act (18 U.S.C. 874) as supplemented in Department of Labor regulations (29 CFR part 3). This Act provides that each Contractor shall be prohibited from inducing, by any means, any person in connection with the construction to give up any part of the compensation to which the person is otherwise entitled.

15.10.5 Clean Air Act (42 U.S.C. 7414), section 114, and the Water Pollution Control Act (33 U.S.C. 1813), section 308. Under Executive Order 11738 and Environmental Protection Agency (EPA) regulations 40 CFR part 15, all Contracts in excess of $100,000 are required to comply with these Acts. The Acts require the Contractor to:

15.10.5.1 Notify the Owner of the receipt of any communication from EPA indicating that a facility to be utilized in the performance of the Contract is under consideration to be listed on the EPA list of Violating Facilities,

15.10.5.2 Certify that any facility to be utilized in the work by any nonexempt contractor or subcontractor is not listed on the EPA list of Violating Facilities as of the date of the Contract Award.

15.10.5.3 Include or cause to be included the above criteria and requirements of clauses A.13.3.5.1 and A.13.3.5.2 in every nonexempt Subcontract, and that the Contractor will take such actions as the Agency may direct as a means of enforcing such provisions.

15.10.6 The Contractor shall be required to comply with Section 107 of the Contract Work Hours and Safety Standards Act (40 U.S.C. 333) entitle "Safety and Health Regulations for Construction" (29 CFR Part 1926) to the extent that any resulting Contract involves construction.

15.11 ENVIRONMENTAL REQUIREMENTS

15.11.1 Mitigation Measures - The Design-Builder shall comply with applicable mitigation measures established in the environmental assessment for the project. These may be obtained from the Agency representative.

15.11.2 The Design-Builder, when constructing a Project involving trenching, excavating, or other earth moving activity, shall comply with the following environmental constraints:

15.11.2.1 Endangered Species, Historic Preservation, Human Remains and Cultural Items, Hazardous Materials, and Paleontology - Any excavation or other earth moving activity by the Design-Builder that provides evidence of the presence of endangered or threatened species or their critical habitat, uncovers a historical or archaeological artifact, human remains or cultural items, hazardous materials, a fossil or other paleontological materials will require the Design-Builder to:

.1 Temporarily stop work;

.2 Provide immediate notice to the Architect and the Agency, and in the case of potentially hazardous materials, provide immediate notice to local first responders and take such measures as necessary to protect the public and workers;

.3 Take reasonable measures as necessary to protect the discovered materials or protected resource;

.4 Abide by such direction as provided by the Agency, or Agencies responsible for resource protection or hazardous materials management; and

.5 Resume work only upon notice from the Architect and the Agency.

15.12 Compliance with all Federal, State, and local requirements effective on the contract execution date will be the responsibility of the Design-Builder.

15.13 RECORDS

15.13.1 If the Contract is based on a negotiated Bid, the Owner, the United States Department of Agriculture, the Comptroller General of the United States, or any of their duly authorized representatives, shall have access to any books, documents, papers, and records of the Design-Builder which are directly pertinent to a specific Federal loan program for the purpose of making audit, examination, excerpts, and transcriptions. The Design-Builder shall maintain records for at least three years after the Owner makes final payment and all other pending matters are closed.

ARTICLE 16: Scope of the Agreement

Modify subparagraph 16.1.6 by inserting the following in the appropriate space:

Payment Bond
Performance Bond
Compliance Statement (Form RD 400-6)
Certification Regarding Debarment, Suspension, Ineligibility and Voluntary Exclusion - Lower Tier Covered Transactions (Form AD 1048)
Disclosure of Lobbying Activities (SF-LLL)
Certification for Contracts, Grants and Loans (RD Instruction 1940-Q, Exhibit A-1)

Exhibit B: INSURANCE AND BONDS

B.2.1 Add subparagraph B.2.1.1.6:

B.2.1.1.6 The Owner shall be named as co-insured on the liability insurance.

Add the following clauses to B.2.1.

B.2.1.11 The insurance required in subparagraph B.2.1 shall be written for not less than the following limits, or greater if required by law:

.1 Workers' Compensation:

(a) State:	Statutory	
(b) Applicable Federal (E.g. Longshoremen's)	Statutory	
(c) Employer's Liability:	$ _____	per Accident
	$ _____	Disease, Policy Limit
	$ _____	Disease, Each Employee

.2 Comprehensive or Commercial General Liability (Including Premises-Operations; Independent Design-Builders' Protective; Products and Completed Operations; Broad Form Property Damage):

(a) Bodily Injury:	$_____	Each Occurrence
	$_____	Aggregate
(b) Property Damage	$_____	Each Occurrence
	$_____	Aggregate

(c) Products and Completed Operations to be maintained for ____ years after final payment:
$_____ Aggregate

(d) Property Damaged Liability Insurance shall provide X, C and U coverage.

(e) Broad Form Property Damage Coverage shall include Completed Operations.

.3 Contractual Liability:

(a) Bodily Injury	$_____	Each Occurrence
	$_____	Aggregate
(b) Property Damage	$_____	Each Occurrence
	$_____	Aggregate

.4 Personal Injury, with Employment Exclusion deleted:
$_____ Aggregate

.5 Business Auto Liability (including owned, non-owned and hired vehicles):

(a) Bodily Injury	$_____	Each Person

$_____ Each Occurrence
(b) Property Damage $_____ Each Occurrence

.6 If the General Liability Coverages are provided by a Commercial Liability policy, the:

(a) General Aggregate shall be not less than $_____ and it shall apply, in total, to this Project only.
(b) Fire Damage Limit shall be not less than $_____ on any one fire.
(c) Medical Expense Limit shall be not less than $_____ on any one person

.7 Umbrella Excess Liability:
$_____ over primary insurance
$_____ retention for self-insured hazards each occurrence.

.8 If an exposure exists, Aircraft Liability (owned and non-owned) and Watercraft Liability (owned and non-owned) with limits approved by the Owner shall be provided.

Add the following subparagraphs to subparagraph B.2.2:

B.2.2.2 The Design-Builder shall furnish the Owner Bonds covering faithful performance of the Contract and payment of obligations arising thereunder with such bonds dated on or before the date of this agreement. The surety company executing the Bonds must hold a certificate of authority as an acceptable surety on Federal Bonds as listed in Treasury Circular 570, as amended, and be authorized to transact business in the State where the Project is located. The Bonds (using the latest AIA forms) shall each be equal to the amount of the Contract Sum. The cost of these Bonds shall be included in the Contract Sum.

B.2.2.3 The Design-Builder shall require the attorney-in-fact who executes the required Bonds on behalf of the surety to affix thereto a certified and current power of attorney.

B.2.2.4 If at any time a surety on any such Bond is declared bankrupt or loses its right to do business in the State in which the Work is to be performed or is removed from the list of surety companies accepted on Federal Bonds, the Design-Builder shall within ten (10) calendar days after notice from the Owner to do so, substitute an acceptable Bond in such form and sum and signed by such other surety or sureties as may be satisfactory to the

Owner. The premiums of such Bond shall be paid by the Design-Builder. No further payment shall be deemed due nor shall be made until the new surety or sureties shall have furnished an acceptable Bond to the Owner.

Delete the last sentence in subparagraph B.3.2.4.

Delete subparagraph B.3.2.5.

SIGNATURE BLOCK:

Delete the signature block on page 34 of this Agreement and substitute the following signature block:

This Agreement is entered into as of the day and year first written above and is executed in at least three original copies, of which one is to be delivered to the Design-Builder, one to the Owner and one to the Agency. Concurrence in the Contract by the Agency is required before the contract is effective.

OWNER:

ATTEST: _____ BY: _____

Print Name: _____ Print Name: _____

Title: _____ Title: _____

Date: _____ Date: _____

DESIGN/BUILDER:

ATTEST: _____ BY: _____

Print Name: _____ Print Name: _____

Title: _____ Title: _____

Date: _____ Date: _____

OWNER'S ATTORNEY REVIEW:

I have examined this design/build contract and have received verification that the proper performance and payment bond(s) will be issued and executed thereof, and I am of the opinion that each of the aforesaid agreements are adequate and has been duly executed by the proper parties thereto acting through their duly authorized representatives; that said representatives have full power and authority to execute said agreements on behalf of the respective parties named thereon; and that the foregoing agreements constitute valid and legally binding obligations upon the parties executing the same in accordance with terms, conditions, and provisions thereof.

By: _____

Print Name: _____

Date: _____

AGENCY CONCURRENCE:
Approved as lender or insurer of fund to defray the costs of this contract and without liability for any payments thereunder, the USDA Rural Development hereby concurs in the award of this contract.

By: _____ Title: _____

Print Name: _____ Date: _____

o0o

EXHIBIT 2B-01
2018 USDA Environmental
Finding of No Significant Impact

August 20, 2018

Ms. Rebecca L. Palmer
State Historic Preservation Officer
Nevada State Historic Preservation Office
901 s. Stewart St., Suite 5004
Carson City, NV 89701-5248

Attention: Jessica Axsom

RE: Finding of No Historic Properties Affected – West Wendover Fire Station Project
West Wendover Nevada

Dear Ms. Palmer:

Under the Community Facility Programs, 7 CFR Part 1942, Subpart A and 7 CFR Part 3570 Subpart A, the Rural Housing Service (RHS) is considering funding the application from the City of West Wendover for the following:

> Construct a New Fire Station on the same area as previously selected for the new City Hall and Justice Center that was previously reviewed and constructed in 2008 and 2009. Originally the fire station was proposed to be part of the City Hall Structure, however due to financial constraints the fire station was eliminated at that time. No other construction has occurred in the surrounding area since the 2006 evaluation and construction of the City Hall. Included in this project is funding for procuring the land next to the proposed fire station.

The project will be located west of the City Hall and within the area reviewed in 2006. (see attached map); the site lies North of the Victory Highway which will not be impacted by this project. Additional details were submitted in the original consultation back in 2006. We have included copies of the original SHPO consultation and response and BLM's MOA for the project. The project met all the requirements included in the BLM MOA which was finalized in 2008. Also copies of the correspondence to the tribes that were consulted for the original project are attached and these same tribes have been re-contacted.

RHS has determined that this project is an undertaking subject to review under section 106 of the National Historic Preservation Act, 54 U.S.C. § et seq., and its implementing regulations, 36 CFR Part 800 (Section 106 review).

Back in 2006 no quad map had been required, as such we have included a quad map with a designated area of potential effect (APE). No other structures are located within the APE. The Victory Highway is within the APE but will not be impacted by this project.

Based on review of the project documentation provided by previous review s in 2006 through 2008 and recent field inspections, RHS has determined that a finding of no historic properties affected is appropriate for this undertaking. This finding will conclude Section 106 review as it agrees with the determinations of previous environmental reviews. Please provide your concurrence or objection, electronically within thirty days of your receipt of this recommended finding. In accordance with 36 CFR § 800.3(c)(4), RUS will proceed to the next step in review if we do not receive a response from you within thirty days.

RHS will include an inadvertent discovery provision, developed in accordance with 36 CFR § 800.13 (b) and (c), as a condition of obligation to address any historic properties which might be inadvertently discovered or affected during project construction.

Should you have any questions, please contact me at (775) 887-1222 ext. 4759 or by e-mail at john.nelson4@nv.usda.gov.

Sincerely,

John Nelson, P.E., P.L.S.
State Environmental Coordinator
USDA Rural Development, Nevada

cc:	Kelsey Owens, USDA RD	via e-mail
	Cheryl Couch, USDA RD	via e-mail
	Maria Murillo, USDA RD	via e-mail
	Chris Melville, West Wendover	via e-mail
	Shay Stark, Aqua Engineering	via e-mail

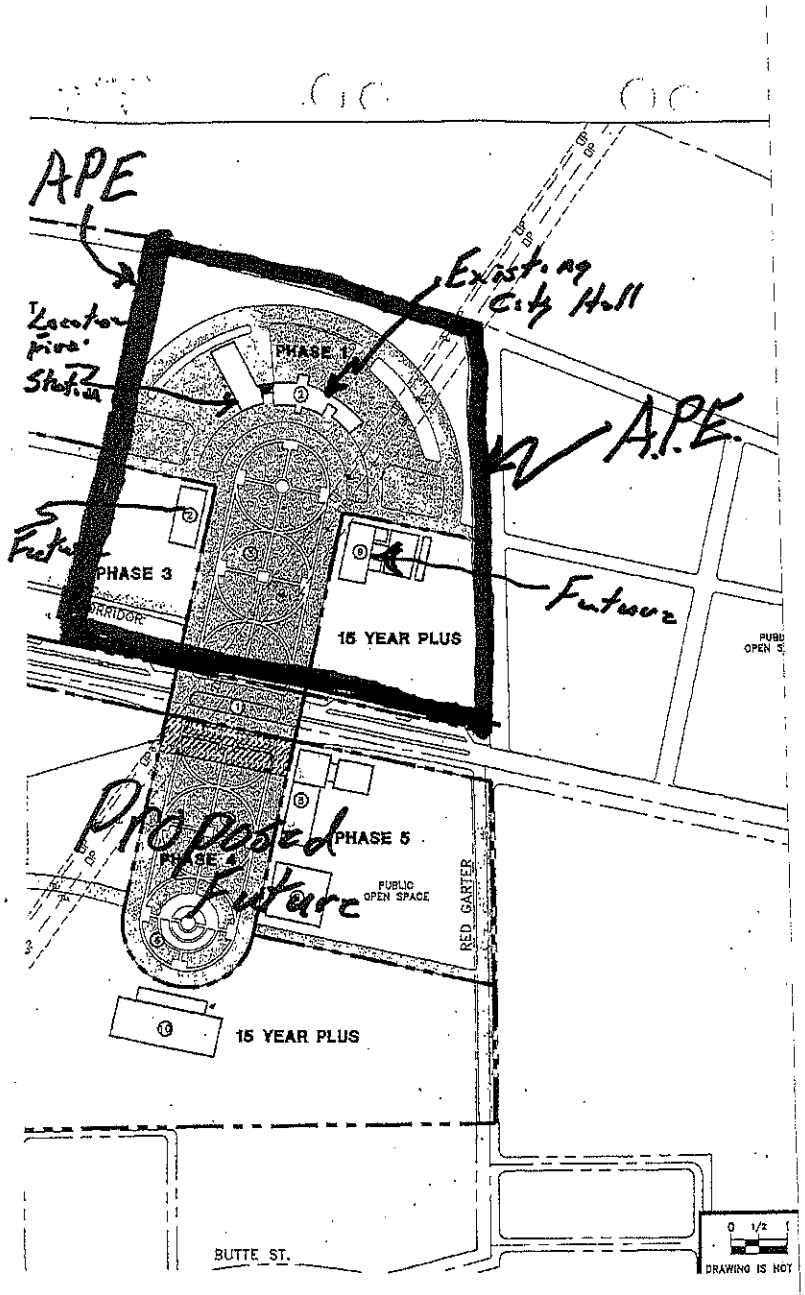
APE
Existing City Hall
A.P.E.
Future
PHASE 1
PHASE 3
15 YEAR PLUS
Proposed
PHASE 5
PHASE 4
Future
PUBLIC OPEN SPACE
RED GARTER
15 YEAR PLUS
BUTTE ST.
DRAWING IS NOT

WENDOVER QUADRANGLE
UTAH-NEVADA
7.5-MINUTE SERIES
USGS
U.S. DEPARTMENT OF THE INTERIOR
U.S. GEOLOGICAL SURVEY
SCALE 1:24 000
WENDOVER, UT-NV
1047

MEMORANDUM OF AGREEMENT
AMONG
THE ELKO FIELD OFFICE OF THE BUREAU OF LAND MANAGEMENT,
THE NEVADA STATE HISTORIC PRESERVATION OFFICER,
AND THE CITY OF WEST WENDOVER, NEVADA,
REGARDING
RESOLUTION OF ADVERSE EFFECTS RESULTING FROM
LEASING OF 124.67 ACRES OF PUBLIC LAND

WHEREAS, the Elko Field Office of the Bureau of Land Management (BLM) pursuant to the Nevada Protocol and in consultation with the Nevada State Historic Preservation Office (NSHPO), has determined that a one mile segment of the Victory Highway/U.S. 40 in T. 33 N., R. 70 E. MDM, within Sections 8, 9 and 16 is eligible for inclusion in the National Register of Historic Places; and

WHEREAS the BLM has determined that leasing the parcel containing this highway segment to the City of West Wendover under the Recreation and Public Purposes Act, and subsequent alteration of the historic property and its setting during construction of the city's administrative center, would result in an adverse effect; and

WHEREAS, BLM has notified the Advisory Council on Historic Preservation (Council) of these adverse effects in accordance with 36 C.F.R. 800.6(a)(1), regulations implementing Section 106 of the National Historic Preservation Act (16 U.S.C.470f); and

WHEREAS, the proponent, West Wendover, Nevada, participated in the consultation and has been invited to concur in this memorandum of agreement, and will pay for and implement mitigation measures for the property as outlined below in this MOA:

NOW, THEREFORE, BLM and the NSHPO enter into this Memorandum of Agreement (MOA) which provides that the undertaking shall be implemented in accordance with the following treatment measures in order to mitigate the effect of the undertaking on this historic property.

I. PURPOSE:

Execution of this MOA by BLM and NSHPO and filing of the MOA with the Council pursuant to 36 C.F.R. 800.6(b)(1)(iv) prior to issuing the lease, and implementation of its terms evidence that BLM has taken into account the effects of this undertaking on historic properties and afforded the Council an opportunity to comment.

II. TREATMENT MEASURES:

The BLM shall ensure implementation of the following measures:

A. BLM will consult with the Pacific Great Basin System Support Office of the National Park Service (NPS) and prepare Draft Historical American Engineering Record (HAER) level documentation, as recommended by NPS for this segment of the Victory Highway/U.S. 40). Draft HAER documentation will be submitted to NPS

within six months following completion of field work to document the one mile segment of the Victory Highway. Final documentation will be submitted within two months after receipt of NPS comments on the draft.

B. Final copies of the photographs will be approved by NPS before the highway is altered. HAER narrative documentation does not need be approved by NPS prior to alteration of the highway, but draft and final copies will be submitted within the time periods specified above at II.A.

C. A copy of the final HAER documentation, as approved by NPS, will be sent to the NSHPO in Carson City, Nevada.

D. The following terms and conditions will be inserted into the R&PP lease agreement and carried through to the deed should the property be patented under this Act.

1. The historic Victory Highway/U.S. 40 roadway within the lease parcel shall be preserved in place except at locations where the roadbed must be cut to allow street access to the city complex. The existing asphalt shall be preserved to the extent possible. In locations where the asphalt has deteriorated or been removed such as at the western end of the lease parcel and the culvert removal locations, the roadbed shall be maintained as a hard packed gravel surface.
2. Utilities shall be located within road crossing corridors, or bored under the highway so as to not disturb the pavement more than necessary.
3. At street crossings the Victory Highway shall be saw cut and removed only for the width of the road and sidewalk, plus at most a 10 foot transition on the outside of the sidewalk.
4. The historic roadbed will require some repair prior to incorporating it into a walking/biking trail and continued maintenance to control vegetation. Repair and maintenance activities shall be conducted in a manner that preserves the integrity of the historic property. Drainages will be assessed to determine the necessity of installing culverts. If culverts are needed they will be designed to be unobtrusive and not distract from the historic nature of the highway. Discarded facing stones from previously removed culverts can be used with any new culverts. Compacted fill is to be used to bring previous culvert locations up to grade or plug holes in the asphalt. Vegetation removal from the paved surface shall be done in a manner that causes least impact to the asphalt as outlined on pages 34-35 of cultural resources inventory report BLM1-2516.
5. West Wendover shall install interpretive signs along or near the historic property. As proposed by the City, they will work with the BLM to develop a plan for preservation and phased interpretation of the highway and the features along it. The extant culverts, billboard remains and the nearby transcontinental telephone line will be among the interpreted features. Discarded culvert facing stones may be used for construction of some of the monuments.

III. Objections:

Should any party to this MOA object at any time to any actions proposed or the manner in which the terms of this MOA are implemented, BLM will consult with the objecting party to

resolve the objection. If BLM determines, within 30 days, that such objection(s) can not be resolved, BLM will:

A. Forward all documentation relevant to the dispute to the Council in accordance with 36 C.F.R. 800.2(b)(2). Upon receipt of adequate documentation, the Council will review and advise BLM on the resolution of the objection within 30 days. Any comment provided by the Council, and all comments from the parties to the MOA will be taken into account by BLM in reaching a final decision regarding the dispute.
B. If the Council does not provide comments regarding the dispute within 30 days after receipt of adequate documentation, BLM may render a decision regarding the dispute. In reaching its decision, BLM will take into account all comments regarding the dispute from the parties to the MOA.
C. BLM's responsibility to carry out all other actions subject to this MOA that are not the subject of the dispute remain unchanged. BLM will notify all parties of its decision in writing before implementing that portion of the undertaking subject to dispute under this stipulation. BLM's decision will be final.

IV. Termination:

If the MOA is not amended following the consultation set out in Stipulation II, it may be terminated by any signatory or invited signatory. Within 30 days following termination, BLM shall notify the signatories if it will initiate consultation to execute a MOA with the signatoried under 36 C.F.R. 800.6(c)(1) or request the comment of the Council under 36 C.F.R. 800.7(1) and proceed accordingly.

Execution of this Memorandum of Agreement and implementation of its terms evidence that the BLM has afforded the Nevada SHPO an opportunity to comment on the West Wendover Recreation and Public Purposes Lease and its effect on historic properties, and that the BLM has taken into account the effects of the undertaking on historic properties.

U.S. DEPARTMENT OF THE INTERIOR, BUREAU OF LAND MANAGEMENT

By: Helen Hankins Date: 8-3-2006

Helen Hankins, Elko Field Office Manager

NEVADA STATE HISTORIC PRESERVATION OFFICE

By: _____ Date: 8-9-06
for Alice M. Baldrica, Deputy SHPO

CONCUR:

By: _____ Date: 08-03-06
City of West Wendover

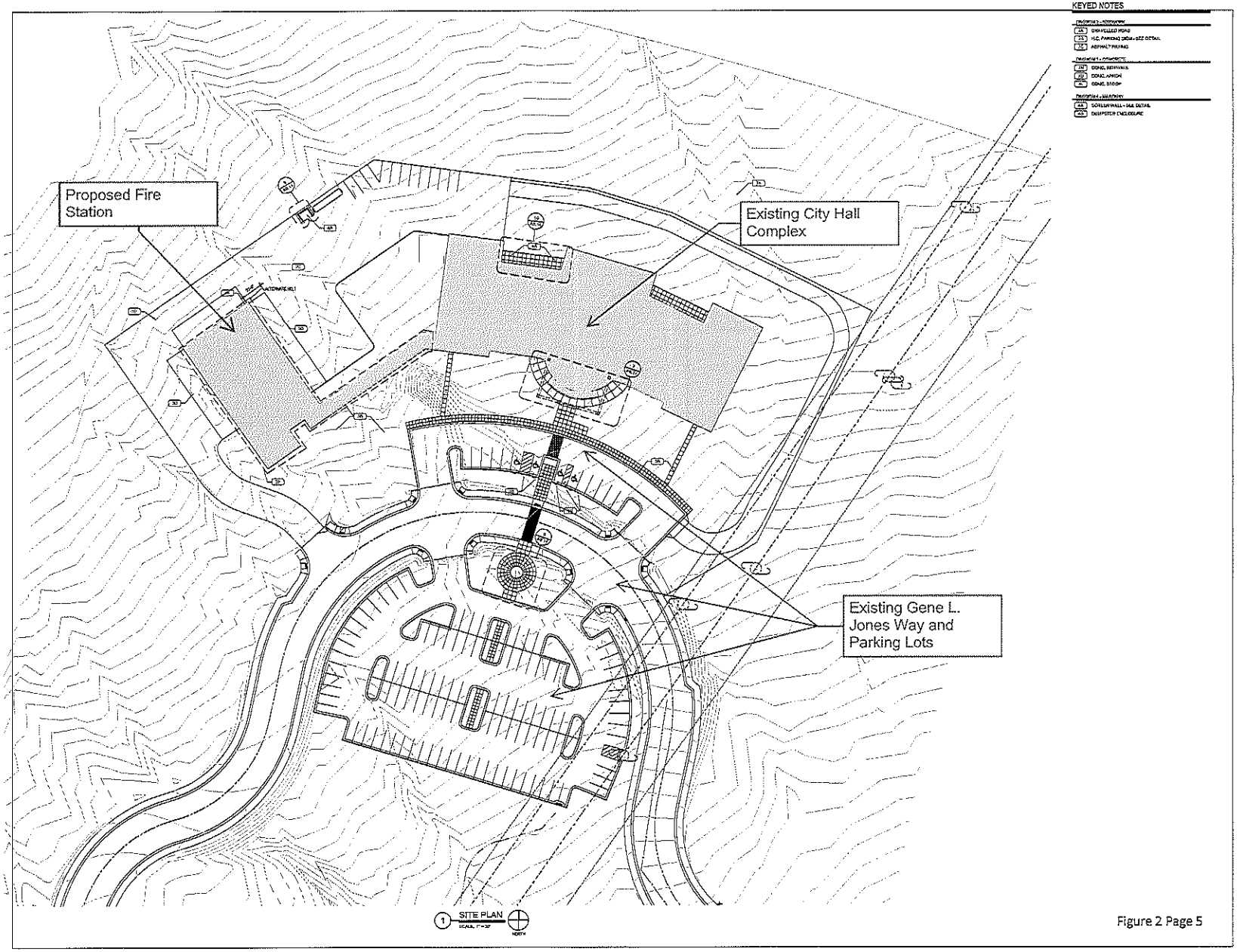

Figure 2 Page 5

STATE OF NEVADA
DEPARTMENT OF CULTURAL AFFAIRS
Nevada State Historic Preservation Office
100 N. Stewart Street
Carson City, Nevada 89701
(775) 684-3448 • Fax (775) 684-3442
www.nvshpo.org

KENNY C. GUINN
Governor

SCOTT K. SISCO
Interim Director

RONALD M. JAMES
State Historic Preservation Officer

September 20, 2006

2006 SEP 22 P 1:51

Herb Shedd
Business and Cooperative Programs Director
USDA Rural Development
1390 South Curry Street
Carson City NV 89703-5146

RE: West Wendover City Hall Funding, Salt Lake Desert, Elko County.

Dear Mr. Shedd:

The Nevada State Historic Preservation Office (SHPO) reviewed the subject undertaking. The area of potential effect for the subject undertaking has been previously inventoried for cultural resources by the Bureau of Land Management as the land proposed for the City Hall is leased from that federal agency. This undertaking identified the following historic property in the larger parcel for lease:

CrNV-01-8957 (segment of the Victory Highway).

The SHPO concurs with the USDA Rural Development's determination that the proposed undertaking will not pose an adverse effect to the above historic property.

If you have any questions concerning this correspondence, please contact me by phone at (775) 684-3443 or by E-mail at rlpalmer@clan.lib.nv.us.

Sincerely,

Rebecca Lynn Palmer
Review and Compliance Officer, Archaeologist

United States Department of Agriculture
Rural Development
Nevada State Office

September 20, 2006

Mr. Ronald James
Nevada Historic Preservation Officer
State Historic Preservation Office
100 N. Stewart St.
Carson City, NV 89701-4285

FILE COPY

Attn: Rebecca L. Palmer

Re: West Wendover City Hall

Dear Ms. Palmer:

Your previous correspondence to our agency concerning the referenced project indicated that we should consult with the Bureau of Land Management for compliance with Section 106 of the National Historic Preservation Act of 1966, as amended. We have reviewed the BLM's consultation with your office and understand that a previous discovered property (a segment of the Victory Highway) has been identified during their consultative process. The funding our agency will provide to the city for the construction of the new city hall will not have an adverse effect on that specific property. Additionally, we will defer to the BLM on their mitigation measures on the historic property.

We would appreciate your comments on what we propose to do and if you have any further questions on our undertaking, please do not hesitate contacting me at 775-887-1222 extension 19.

Sincerely,

Herb Shedd
Business and Cooperative Programs Director

1390 S. Curry Street • Carson City, Nevada 89703-5146
Phone: (775) 887-1222 • Fax: (775) 887-1287 • TDD: (775) 885-0633 • Web: http://www.rurdev.usda.gov/nv

Committed to the future of rural communities.

"USDA is an equal opportunity provider, employer and lender."
To file a complaint of discrimination, write to USDA, Director, Office of Civil Rights, 1400 Independence Avenue, S.W., Washington, D.C. 20250-9410, or call (800) 795-3272 (voice) or (202) 720-6382 (TDD).

United States Department of Agriculture
Rural Development
Nevada State Office

August 10, 2006

Mr. Ronald James
Nevada Historic Preservation Officer
State Historic Preservation Office
100 N. Stewart St.
Carson City, NV 89701-4285

Re: City of West Wendover – Construction of City Administration Building/Complex

Dear Mr. James:

Our Agency is planning to issue a loan to the City of West Wendover, Elko County, Nevada for the construction of a new city administration building. As the Elko Field Office of the Bureau of Land Management has been in consultation with your office regarding this project and USDA Rural Development intends no alterations to the scope of this project, USDA RD is incorporating/adopting the BLM's consultation process for our purposes.

Attached is the proposed Memorandum of Agreement among the Bureau of Land Management, the City of West Wendover and the Nevada SHPO that USDA Rural Development will use to assist in incorporating the treatment/mitigation measures required and agreed upon into our Letter of Conditions. Letter of Conditions contains all the conditions the City must meet or comply with in order to obtain USDA Rural Development funding.

This concludes our agency's consultation with the Nevada State Historic Preservation Office regarding this project. If you have any questions, please contact me at 775-738-8468, ext. 109 or by email at kelli.colyer@nv.usda.gov or contact Cheryl Couch, State Environmental Coordinator at 775-887-1222, ext. 22 or by email at cheryl.couch@nv.usda.gov.

Sincerely,

Kelli Colyer
Area Specialist

Enclosure

1390 S. Curry Street • Carson City, Nevada 89703-5146
Phone: (775) 887-1222 • Fax: (775) 887-1287 • TDD: (775) 885-0633 • Web: http://www.rurdev.usda.gov/nv

Committed to the future of rural communities.

"USDA is an equal opportunity provider, employer and lender."
To file a complaint of discrimination, write to USDA, Director, Office of Civil Rights, 1400 Independence Avenue, S.W., Washington, D.C. 20250-9410, or call (800) 795-3272 (voice) or (202) 720-6382 (TDD).

United States Department of Agriculture
Rural Development
Elko Local Office

August 9, 2006

Cultural Coordinator
TE-Moak Tribe of Western Shoshone
525 Sunset St.
Elko, NV 89801

Re: City of West Wendover, City Hall Government Complex

Dear Cultural Coordinator :

Our Agency is planning to make a loan to the City of West Wendover, Nevada for the construction of a City Hall Government Complex.

Enclosed is a map showing the project site and the area of potential effects (APE) we have established for this undertaking. A representative from our agency has visited the project site, and all information received by our office (and from our inspection of the property) has led to a determination that the project will have a potential adverse effect on the one mile segment of the Victory Highway/U.S 40. A Memorandum of Agreement has been prepared by the Elko Field Office of the Bureau of Land Management, the Nevada State Historic Preservation Officer, and the City of West Wendover, Nevada to address the resolution of adverse effects resulting in the construction of the project. We agree with and plan to adopt the mitigation measures proposed by these agencies.

In initiating review of this undertaking in accordance with Section 106 of the National Historic Preservation Act and its implementing regulations (36 CFR Part 800), we are assessing our need for information regarding historic properties that might be affected by the undertaking. We would appreciate your advice as to what actions we should take to identify cultural and historic properties that would have significance to the TE-Moak Tribe of Western Shoshone.

Our preliminary analyses suggest that we carry out the following identification activities:

1. Consult the National Register of Historic Places.
2. Consult official State site files and databases.

We would appreciate your comments on what we propose to do. If we do not hear from you within 30 days we will assume that you agree that the above activities will constitute

555 W. Silver St, Ste 101 • Elko, Nevada 89801
Phone: (775) 738-8468 • Fax: (775) 738-1429 • TDD: (775) 885-0633 • Web: http://www.rurdev.usda.gov/nv

Committed to the future of rural communities.

"USDA is an equal opportunity provider, employer and lender."
To file a complaint of discrimination write USDA, Director, Office of Civil Rights, Room 326-W, Whitten Building, 14th and Independence Avenue, SW, Washington, DC 20250-9410 or call (202) 720-5964 (voice or TDD).

a reasonable and good faith effort to identify potentially historic properties in the area of potential effect.

Sincerely,

Kelli A. Colyer
Area Specialist

Enclosures

United States Department of Agriculture
Rural Development
Elko Local Office

August 9, 2006

Cultural Coordinator
Goshute Business Council
P.O. Box 6104
Ibapah, UT 94034

Re: City of West Wendover, City Hall Government Complex

Dear Cultural Coordinator:

Our Agency is planning to make a loan to the City of West Wendover, Nevada for the construction of a City Hall Government Complex.

Enclosed is a map showing the project site and the area of potential effects (APE) we have established for this undertaking. A representative from our agency has visited the project site, and all information received by our office (and from our inspection of the property) has led to a determination that the project will have a potential adverse effect on the one mile segment of the Victory Highway/U.S 40. A Memorandum of Agreement has been prepared by the Elko Field Office of the Bureau of Land Management, the Nevada State Historic Preservation Officer, and the City of West Wendover, Nevada to address the resolution of adverse effects resulting in the construction of the project. We agree with and plan to adopt the mitigation measures proposed by these agencies.

In initiating review of this undertaking in accordance with Section 106 of the National Historic Preservation Act and its implementing regulations (36 CFR Part 800), we are assessing our need for information regarding historic properties that might be affected by the undertaking. We would appreciate your advice as to what actions we should take to identify cultural and historic properties that would have significance to the Goshute Business Council.

Our preliminary analyses suggest that we carry out the following identification activities:

1. Consult the National Register of Historic Places.
2. Consult official State site files and databases.

We would appreciate your comments on what we propose to do. If we do not hear from you within 30 days we will assume that you agree that the above activities will constitute

555 W. Silver St, Ste 101 • Elko, Nevada 89801
Phone: (775) 738-8468 • Fax: (775) 738-1429 • TDD: (775) 885-0633 • Web: http://www.rurdev.usda.gov/nv

Committed to the future of rural communities.

"USDA is an equal opportunity provider, employer and lender."
To file a complaint of discrimination write USDA, Director, Office of Civil Rights, Room 326-W, Whitten Building, 14th and Independence Avenue, SW, Washington, DC 20250-9410 or call (202) 720-5964 (voice or TDD).

a reasonable and good faith effort to identify potentially historic properties in the area of potential effect.

Sincerely,

Kelli A. Colyer

Kelli A. Colyer
Area Specialist

Enclosures

United States Department of Agriculture
Rural Development
Elko Local Office

August 9, 2006

Cultural Coordinator
Ely Shoshone Tribe
16 Shoshone Circle
Ely, NV 89301

Re: City of West Wendover, City Hall Government Complex

Dear Cultural Coordinator:

Our Agency is planning to make a loan to the City of West Wendover, Nevada for the construction of a City Hall Government Complex.

Enclosed is a map showing the project site and the area of potential effects (APE) we have established for this undertaking. A representative from our agency has visited the project site, and all information received by our office (and from our inspection of the property) has led to a determination that the project will have a potential adverse effect on the one mile segment of the Victory Highway/U.S 40. A Memorandum of Agreement has been prepared by the Elko Field Office of the Bureau of Land Management, the Nevada State Historic Preservation Officer, and the City of West Wendover, Nevada to address the resolution of adverse effects resulting in the construction of the project. We agree with and plan to adopt the mitigation measures proposed by these agencies.

In initiating review of this undertaking in accordance with Section 106 of the National Historic Preservation Act and its implementing regulations (36 CFR Part 800), we are assessing our need for information regarding historic properties that might be affected by the undertaking. We would appreciate your advice as to what actions we should take to identify cultural and historic properties that would have significance to the Ely Shoshone Tribe.

Our preliminary analyses suggest that we carry out the following identification activities:

1. Consult the National Register of Historic Places.
2. Consult official State site files and databases.

We would appreciate your comments on what we propose to do. If we do not hear from you within 30 days we will assume that you agree that the above activities will constitute

555 W. Silver St, Ste 101 • Elko, Nevada 89801
Phone: (775) 738-8468 • Fax: (775) 738-1429 • TDD: (775) 885-0633 • Web: http://www.rurdev.usda.gov/nv

Committed to the future of rural communities.

"USDA is an equal opportunity provider, employer and lender."
To file a complaint of discrimination write USDA, Director, Office of Civil Rights, Room 326-W, Whitten Building, 14th and Independence Avenue, SW, Washington, DC 20250-9410 or call (202) 720-5964 (voice or TDD).

a reasonable and good faith effort to identify potentially historic properties in the area of potential effect.

Sincerely,

Kelli A. Colyer

Kelli A. Colyer
Area Specialist

Enclosures

United States Department of Agriculture
Rural Development
Elko Local Office

August 9, 2006

Cultural Coordinator
Elko Band TE-Moak Tribe of Western Shoshone
1745 Silver Eagle
Elko, NV 89801-5085

Re: City of West Wendover, City Hall Government Complex

Dear Cultural Coordinator:

Our Agency is planning to make a loan to the City of West Wendover, Nevada for the construction of a City Hall Government Complex.

Enclosed is a map showing the project site and the area of potential effects (APE) we have established for this undertaking. A representative from our agency has visited the project site, and all information received by our office (and from our inspection of the property) has led to a determination that the project will have a potential adverse effect on the one mile segment of the Victory Highway/U.S 40. A Memorandum of Agreement has been prepared by the Elko Field Office of the Bureau of Land Management, the Nevada State Historic Preservation Officer, and the City of West Wendover, Nevada to address the resolution of adverse effects resulting in the construction of the project. We agree with and plan to adopt the mitigation measures proposed by these agencies.

In initiating review of this undertaking in accordance with Section 106 of the National Historic Preservation Act and its implementing regulations (36 CFR Part 800), we are assessing our need for information regarding historic properties that might be affected by the undertaking. We would appreciate your advice as to what actions we should take to identify cultural and historic properties that would have significance to the Elko Band TE-Moak Tribe of Western Shoshone.

Our preliminary analyses suggest that we carry out the following identification activities:

1. Consult the National Register of Historic Places.
2. Consult official State site files and databases.

We would appreciate your comments on what we propose to do. If we do not hear from you within 30 days we will assume that you agree that the above activities will constitute

555 W. Silver St, Ste 101 • Elko, Nevada 89801
Phone: (775) 738-8468 • Fax: (775) 738-1429 • TDD: (775) 885-0633 • Web: http://www.rurdev.usda.gov/nv

Committed to the future of rural communities.

"USDA is an equal opportunity provider, employer and lender."
To file a complaint of discrimination write USDA, Director, Office of Civil Rights, Room 326-W, Whitten Building, 14th and Independence Avenue, SW, Washington, DC 20250-9410 or call (202) 720-5964 (voice or TDD).

a reasonable and good faith effort to identify potentially historic properties in the area of potential effect.

Sincerely,

Kelli A. Colyer
Area Specialist

Enclosures

United States Department of Agriculture
Rural Development
Elko Local Office

August 9, 2006

Cultural Coordinator
Duck Valley Shoshone Paiute Tribes
P.O. Box 219
Owyhee, NV 89832

Re: City of West Wendover, City Hall Government Complex

Dear Cultural Coordinator:

Our Agency is planning to make a loan to the City of West Wendover, Nevada for the construction of a City Hall Government Complex.

Enclosed is a map showing the project site and the area of potential effects (APE) we have established for this undertaking. A representative from our agency has visited the project site, and all information received by our office (and from our inspection of the property) has led to a determination that the project will have a potential adverse effect on the one mile segment of the Victory Highway/U.S 40. A Memorandum of Agreement has been prepared by the Elko Field Office of the Bureau of Land Management, the Nevada State Historic Preservation Officer, and the City of West Wendover, Nevada to address the resolution of adverse effects resulting in the construction of the project. We agree with and plan to adopt the mitigation measures proposed by these agencies.

In initiating review of this undertaking in accordance with Section 106 of the National Historic Preservation Act and its implementing regulations (36 CFR Part 800), we are assessing our need for information regarding historic properties that might be affected by the undertaking. We would appreciate your advice as to what actions we should take to identify cultural and historic properties that would have significance to the Duck Valley Shoshone Paiute Tribes.

Our preliminary analyses suggest that we carry out the following identification activities:

1. Consult the National Register of Historic Places.
2. Consult official State site files and databases.

We would appreciate your comments on what we propose to do. If we do not hear from you within 30 days we will assume that you agree that the above activities will constitute

555 W. Silver St, Ste 101 • Elko, Nevada 89801
Phone: (775) 738-8468 • Fax: (775) 738-1429 • TDD: (775) 885-0633 • Web: http://www.rurdev.usda.gov/nv

Committed to the future of rural communities.

"USDA is an equal opportunity provider, employer and lender."
To file a complaint of discrimination write USDA, Director, Office of Civil Rights, Room 328-W, Whitten Building, 14th and Independence Avenue, SW, Washington, DC 20250-9410 or call (202) 720-5964 (voice or TDD).

a reasonable and good faith effort to identify potentially historic properties in the area of potential effect.

Sincerely,

Kelli A. Colyer
Area Specialist

Enclosures

United States Department of Agriculture
Rural Development
Elko Local Office

August 9, 2006

Cultural Coordinator
Duck Valley Shoshone Paiute Tribes
P.O. Box 219
Owyhee, NV 89832

Re: City of West Wendover, City Hall Government Complex

Dear Cultural Coordinator:

Our Agency is planning to make a loan to the City of West Wendover, Nevada for the construction of a City Hall Government Complex.

Enclosed is a map showing the project site and the area of potential effects (APE) we have established for this undertaking. A representative from our agency has visited the project site, and all information received by our office (and from our inspection of the property) has led to a determination that the project will have a potential adverse effect on the one mile segment of the Victory Highway/U.S 40. A Memorandum of Agreement has been prepared by the Elko Field Office of the Bureau of Land Management, the Nevada State Historic Preservation Officer, and the City of West Wendover, Nevada to address the resolution of adverse effects resulting in the construction of the project. We agree with and plan to adopt the mitigation measures proposed by these agencies.

In initiating review of this undertaking in accordance with Section 106 of the National Historic Preservation Act and its implementing regulations (36 CFR Part 800), we are assessing our need for information regarding historic properties that might be affected by the undertaking. We would appreciate your advice as to what actions we should take to identify cultural and historic properties that would have significance to the Duck Valley Shoshone Paiute Tribes.

Our preliminary analyses suggest that we carry out the following identification activities:

1. Consult the National Register of Historic Places.
2. Consult official State site files and databases.

We would appreciate your comments on what we propose to do. If we do not hear from you within 30 days we will assume that you agree that the above activities will constitute

555 W. Silver St, Ste 101 • Elko, Nevada 89801
Phone: (775) 738-8468 • Fax: (775) 738-1429 • TDD: (775) 885-0633 • Web: http://www.rurdev.usda.gov/nv

Committed to the future of rural communities.

"USDA is an equal opportunity provider, employer and lender."
To file a complaint of discrimination write USDA, Director, Office of Civil Rights, Room 326-W, Whitten Building, 14th and Independence Avenue, SW, Washington, DC 20250-9410 or call (202) 720-5964 (voice or TDD).

a reasonable and good faith effort to identify potentially historic properties in the area of potential effect.

Sincerely,

Kelli A. Colyer
Area Specialist

Enclosures

ATTACHMENT 1
LOCATION MAPS

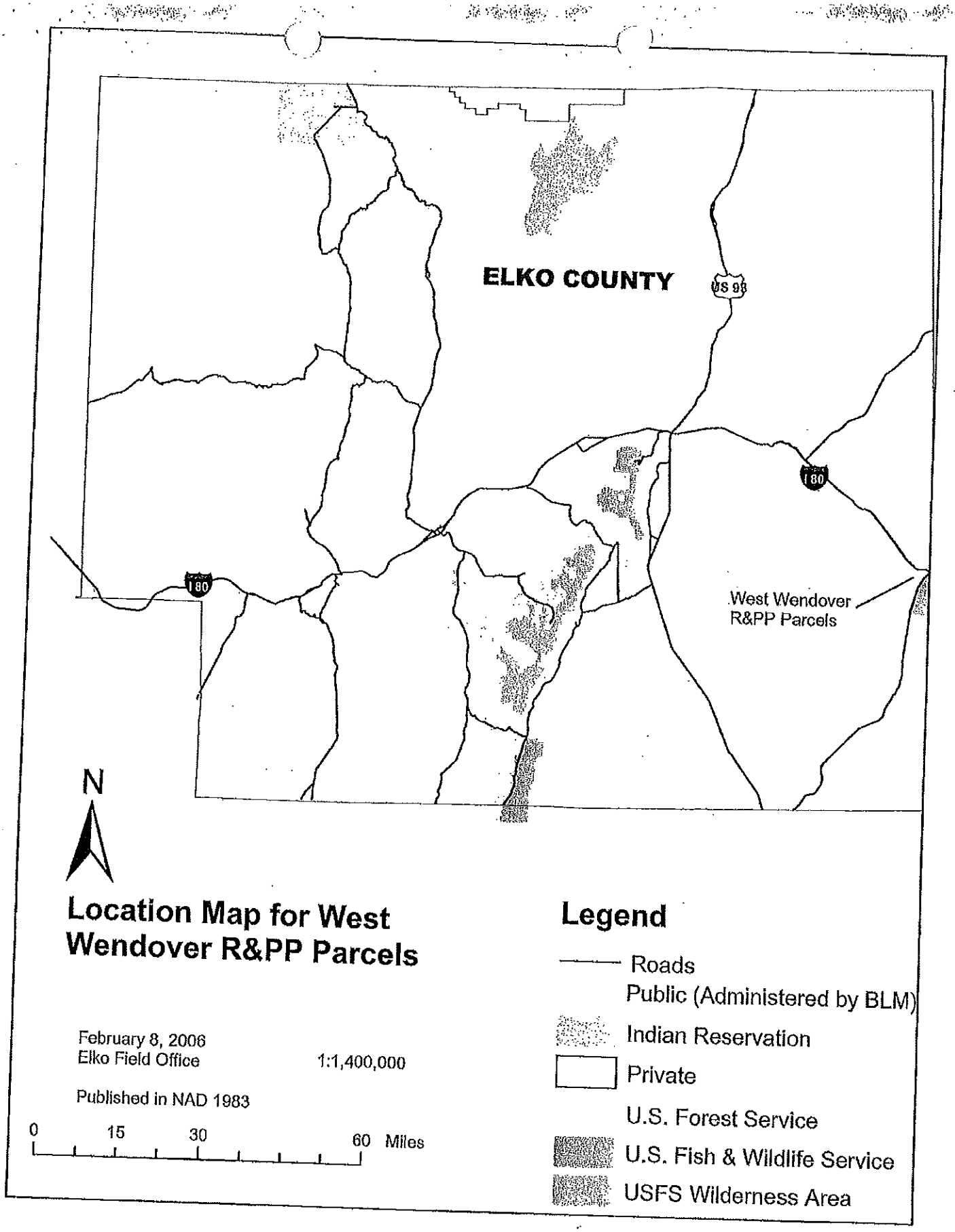

Location Map for West Wendover R&PP Parcels

February 8, 2006
Elko Field Office

1:1,400,000

Published in NAD 1983

0 15 30 60 Miles

Legend

- Roads
- Public (Administered by BLM)
- Indian Reservation
- Private
- U.S. Forest Service
- U.S. Fish & Wildlife Service
- USFS Wilderness Area

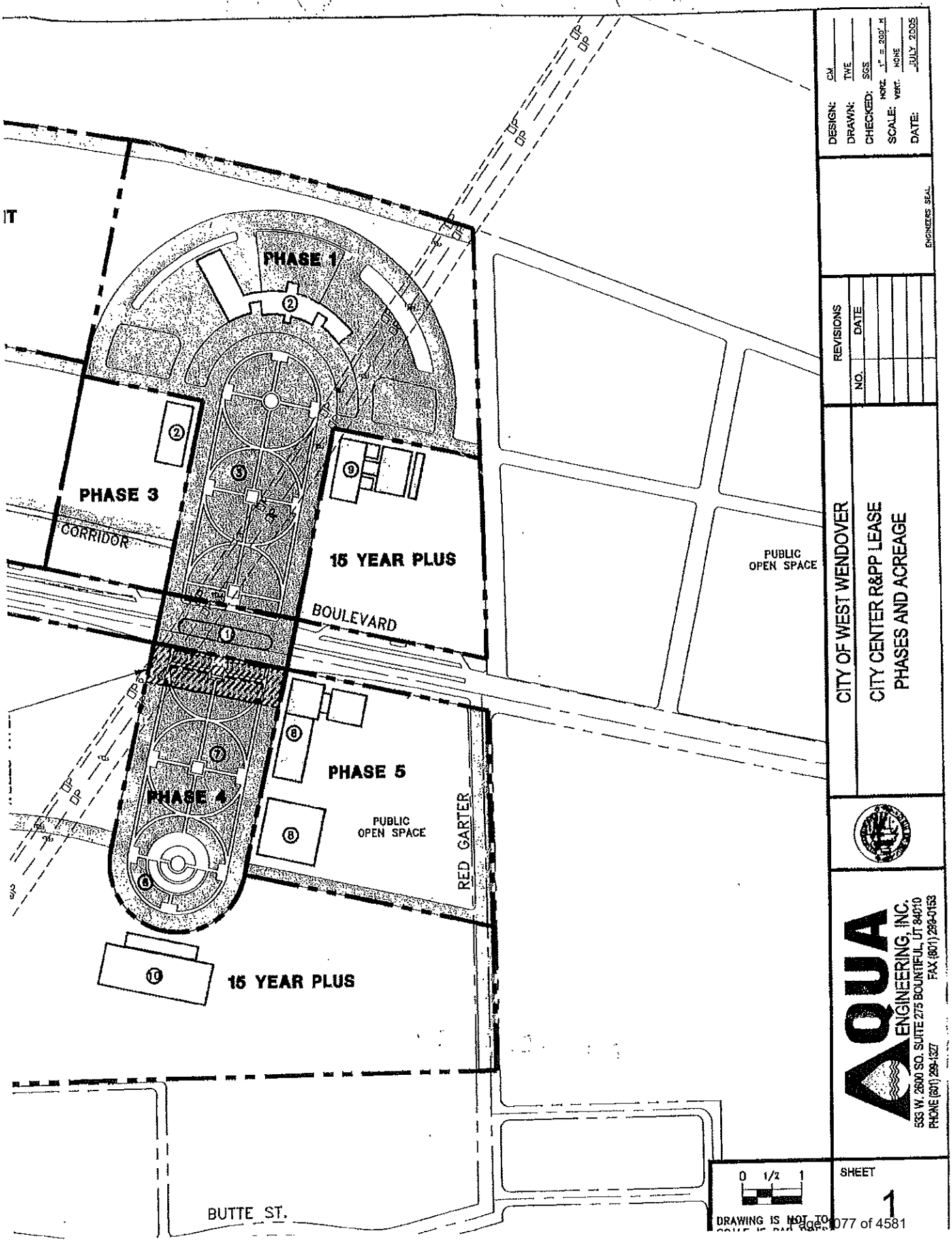
PHASE 1
PHASE 3
CORRIDOR
15 YEAR PLUS
BOULEVARD
PUBLIC OPEN SPACE
PHASE 5
PHASE 4
PUBLIC OPEN SPACE
RED GARTER
15 YEAR PLUS
BUTTE ST.
DESIGN: CM
DRAWN: TWE
CHECKED: SGS
SCALE: HORZ: 1" = 200' ft
VERT: NONE
DATE: JULY 2005
ENGINEERS SEAL
REVISIONS
NO. DATE
CITY OF WEST WENDOVER
CITY CENTER R&PP LEASE
PHASES AND ACREAGE
AQUA ENGINEERING, INC.
533 W. 2600 SO. SUITE 275 BOUNTIFUL, UT 84010
PHONE (801) 299-1327 FAX (801) 298-0153
0 1/2 1
DRAWING IS NOT TO
SHEET
1

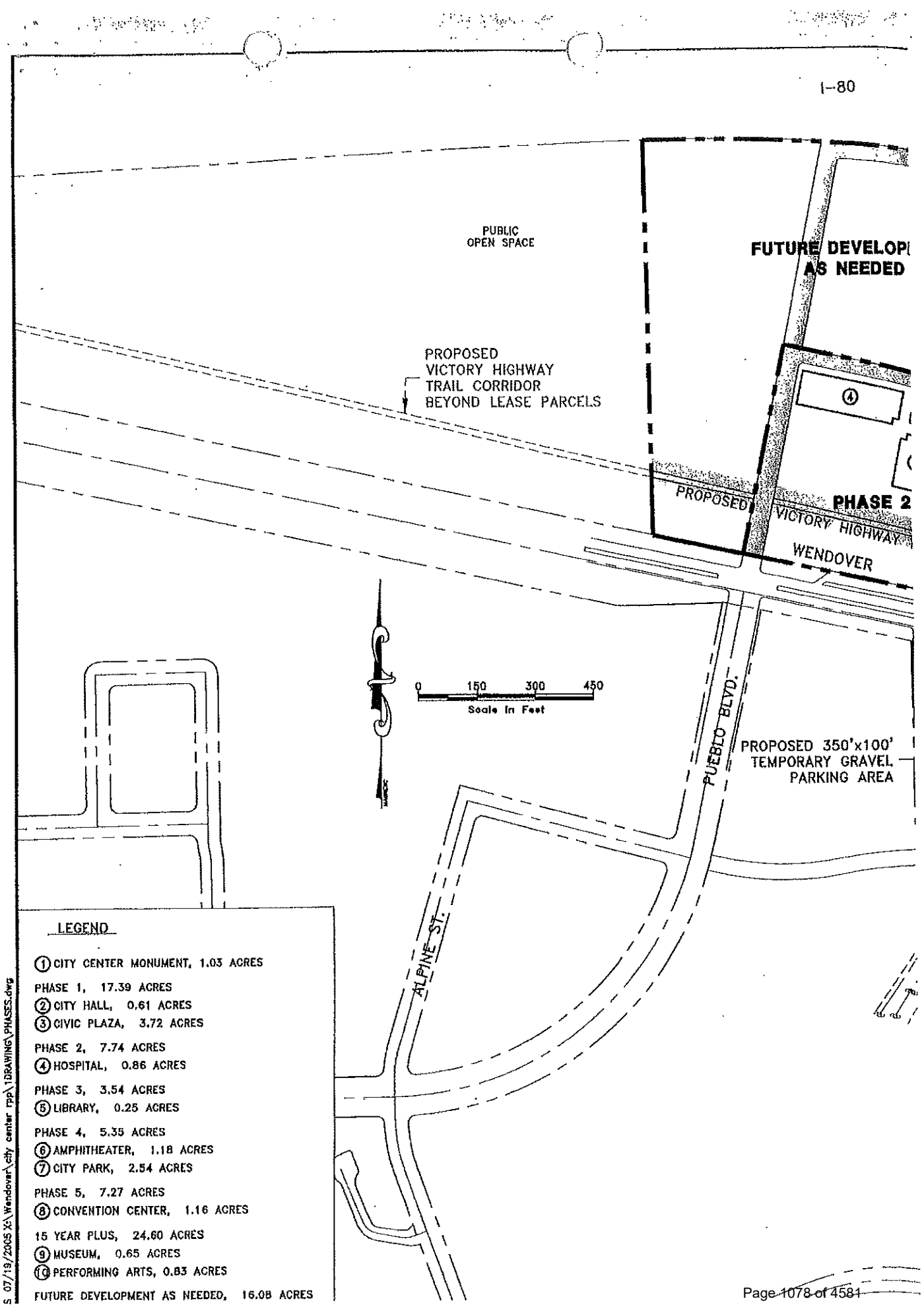
I-80
PUBLIC
OPEN SPACE
FUTURE DEVELOP
AS NEEDED
PROPOSED
VICTORY HIGHWAY
TRAIL CORRIDOR
BEYOND LEASE PARCELS
④
PROPOSED
PHASE 2
VICTORY HIGHWAY
WENDOVER
0 150 300 450
Scale In Feet
PUEBLO BLVD.
PROPOSED 350'x100'
TEMPORARY GRAVEL
PARKING AREA
ALPINE ST.
LEGEND
① CITY CENTER MONUMENT, 1.03 ACRES
PHASE 1, 17.39 ACRES
② CITY HALL, 0.61 ACRES
③ CIVIC PLAZA, 3.72 ACRES
PHASE 2, 7.74 ACRES
④ HOSPITAL, 0.86 ACRES
PHASE 3, 3.54 ACRES
⑤ LIBRARY, 0.25 ACRES
PHASE 4, 5.35 ACRES
⑥ AMPHITHEATER, 1.18 ACRES
⑦ CITY PARK, 2.54 ACRES
PHASE 5, 7.27 ACRES
⑧ CONVENTION CENTER, 1.16 ACRES
15 YEAR PLUS, 24.60 ACRES
⑨ MUSEUM, 0.65 ACRES
⑩ PERFORMING ARTS, 0.83 ACRES
FUTURE DEVELOPMENT AS NEEDED, 16.08 ACRES
S 07/19/2005 X:\Wendover\city center rpp\1DRAWING\PHASES.dwg

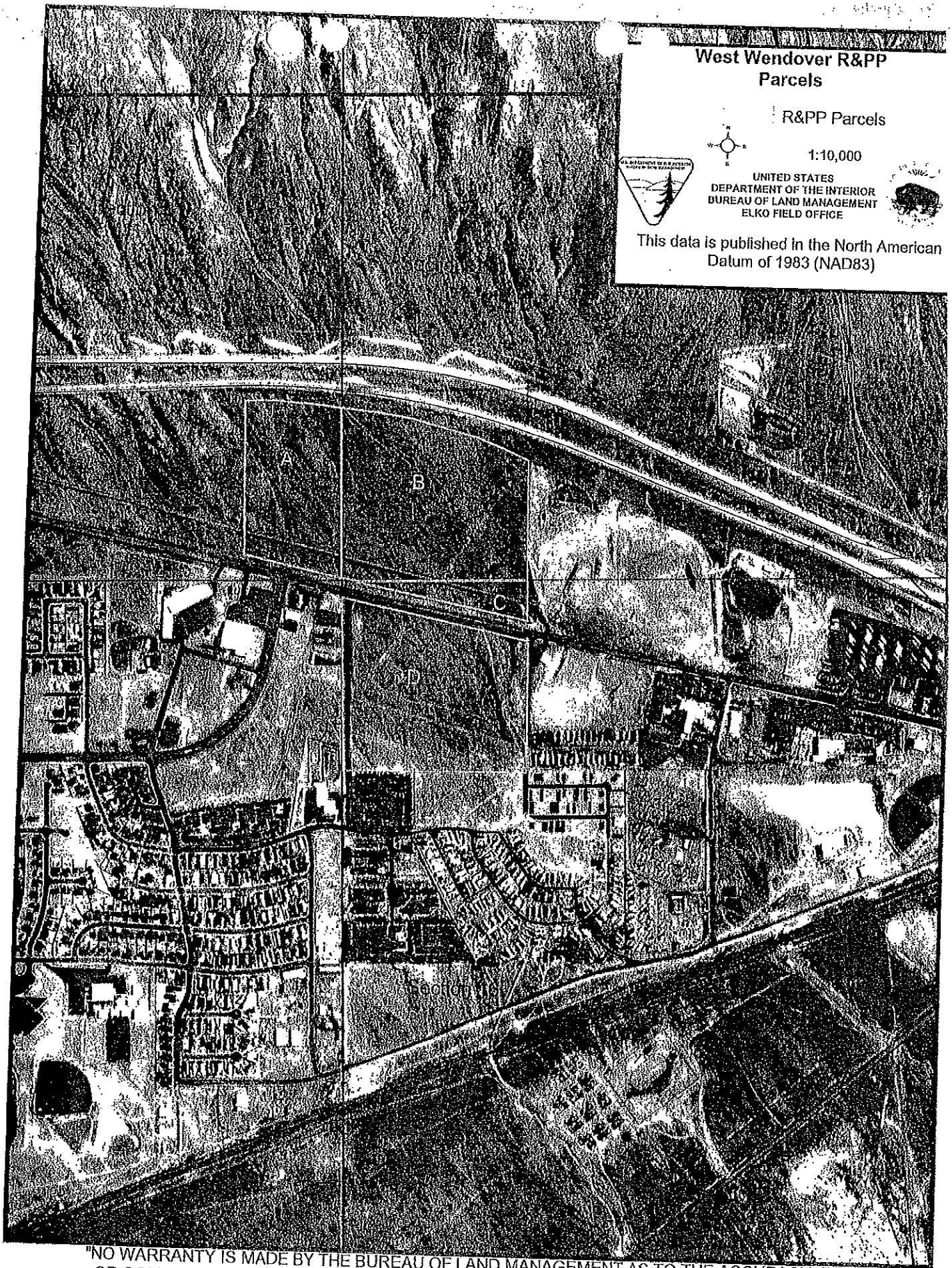

"NO WARRANTY IS MADE BY THE BUREAU OF LAND MANAGEMENT AS TO THE ACCURACY, RELIABILITY, OR COMPLETENESS OF THESE DATA FOR INDIVIDUAL USE OR AGGREGATE USE WITH OTHER DATA "

U.S. Department of Housing and Urban Development
451 Seventh Street, SW
Washington, DC 20410
www.hud.gov

espanol.hud.gov

Environmental Assessment
Determinations and Compliance Findings for HUD-assisted Projects
24 CFR Part 58

(This document is a draft that has not been through final public hearings.)

Project Information

Project Name: City of West Wendover Fire Station #13

Responsible Entity: City of West Wendover

Grant Recipient: City of West Wendover

State/Local Identifier: CDBG # 23-PF-04

Preparer: Shay Stark

Certifying Officer Name and Title: Jasie Holm, Mayor

Grant Recipient (if different than Responsible Entity):

Consultant (if applicable): Shay Stark,
AQUA Engineering
533 West 2600 South Suite 275
Bountiful, Utah 84010
Phone: 801-299-1327 ext. 3731
E-mail: shays@aquaeng.com

Direct Comments to: Chris Melville, City Manager City of West Wendover
P.O. Box 2825
West Wendover, NV 89883
Phone: 775-664-3081
E-mail: cmelville@westwendovercity.com

Project Location: A portion of the W 1/2 of the SW ¼ of the SW/14 of Section 9 T. 33 N. R. 70 E., M.D.B.&M. Please see project location map - Wendover Quadrangle, Wendover Nevada-Utah, 1972 – and Project Location Map Figure G-1 located in Attachment A.

Description of the Proposed Project [24 CFR 50.12 & 58.32; 40 CFR 1508.25]**:**

The proposed action includes construction of a fire station at the existing City Hall Government Complex. The project includes construction of the following improvements:

- Area of Disturbance (Fire station site, utility connections in North Gene L. Jones Way, construction of segment of new public street, relocation of stormwater channel and additional city hall parking.): 3.80 acres.
- Completed Fire Station Site Area: 55,100 square feet or 1.26 acres.
- Building Area: 11,383 square feet.
- Paved Area (fire station site): 0.37 acres or 28.97% of site.
- Building Includes: 5 apparatus bays.
- Building Includes: Offices and activity center including kitchen, dayroom, and equipment storage.
- Approximately 250-foot-long segment of new public street for access to fire station.
- Additional joint use parking at City Hall containing 7 stalls.

Please see Attachment A for drawings describing the proposed action including:

- Drawing Figure 1 City of West Wendover Fire Station #13 Project Location Map
- Project Description
- Concept Design Package (10 Pages) for City of West Wendover Fire Station #13 Project Provided by TSK Architects

Statement of Purpose and Need for the Proposal [40 CFR 1508.9(b)]:

The West Wendover Fire Station was constructed in the 1980's by Elko County when the community was a "Township" under the general jurisdiction of Elko County with a community population of approximately 1,500. In 1991, the City of West Wendover became incorporated and inherited the County's facilities. The city proceeded to grow in population surpassing 5,000 people. The fire station was no longer able to meet the space and operational requirements and provide efficient and effective local government operations.

The current 1980's fire station is a 4,400 square foot leased facility on approximately 1 acre of property at 975 Wendover Boulevard on the east side of the community. Due to the lack of indoor storage the Fire Department stores its HazMat response and Mobile Command unit along with additional equipment items outdoors which shortens the life span of the equipment.

Though the 3 short-bay facility was adequate for the needs of the fire service in the early 1980's under Elko County when it was constructed, today the facility is too small, outdated and as noted, the

City leases the property/facility from a private holding which limits the options for the city in the long-term.

The proposed West Wendover Fire Station is an important long-term public safety facility for the City of West Wendover. Originally planned in 2007 to be part of the construction of the City Hall Government Complex, due to cost, the Fire Station portion of the project was delayed. The proposed site is central to the community and allows the shared use of parking and utilities to minimize the necessary footprint and to provide operational efficiencies. The proposed action will provide a centralized location with a facility that is designed to serve the city well into the future.

Existing Conditions and Trends [24 CFR 58.40(a)]:

The existing Fire Station is currently located closer to the east end of town on Wendover Boulevard. It is on property that is leased form a private entity and is very limited in size and capacity. As the City has grown there has been a need to upgrade all of the original city facilities to retain the capability to provide adequate public services. In 2007 the City relocated the City Hall, Police, Courts and Emergency Dispatch on to a 125 acre parcel through an R&PP Lease with the BLM. This allowed these facilities to be centrally located in the community with access directly off of Wendover Boulevard and sized for necessary future capacity. The fire station was also meant to be part of this project but project costs did not allow for its construction at the time.

The community's growth has been tempered due to very limited land availability. In the past that has been due to the fact that a great deal of the land internally as well as surrounding the community has been under Federal ownership. Over the years both the City and private entities have worked to obtain significant portions of the Federal land inside of the community as well as surrounding the community. Since 2016 several opportunities have taken root and are beginning to come to fruition. The community is growing at a modest rate of 2% to 3%. Barring any national or regional economic upheavals this growth rate is projected to continue for the next decade. New growth has placed additional pressure on the existing fire station and the need to be able to increase capacity is acute. The relocation of the fire station will provide additional land area to construct a facility that is adequate for the current needs as well as future needs. At the proposed site it will be possible to expand the facility in the future as growth requires.

Funding Information

Grant Number	HUD Program	Funding Amount
	States and Small Cities Program	$500,000.00

Estimated Total HUD Funded Amount: $500,000.00

Estimated Total Project Cost (HUD and non-HUD funds) [24 CFR 58.32(d)]**:**

HUD (CDBG) Grant	$500,000.00
UDSA Loan	$8,906,800.00
USDA Grant	$200,000.00
City Cash	$2,325,268.00
Gap Funding	$1,642,623.00
Total	**$13,574,691.00**

Compliance with 24 CFR 50.4, 58.5, and 58.6 Laws and Authorities

Record below the compliance or conformance determinations for each statute, executive order, or regulation. Provide credible, traceable, and supportive source documentation for each authority. Where applicable, complete the necessary reviews or consultations and obtain or note applicable permits of approvals. Clearly note citations, dates/names/titles of contacts, and page references. Attach additional documentation as appropriate.

Compliance Factors: Statutes, Executive Orders, and Regulations listed at 24 CFR §58.5 and §58.6	Are formal compliance steps or mitigation required?	Compliance determinations
STATUTES, EXECUTIVE ORDERS, AND REGULATIONS LISTED AT 24 CFR 50.4 and 58.6		
Airport Hazards 24 CFR Part 51 Subpart D	Yes ☐ No ☒	**Consultant Comments:** Comments by Chris Melville, City Manager, City of West Wendover. "The project is not within an FAA designated civilian airport Runway Clear Zone (RCZ), or within a military Airfield Clear Zone (CZ) or APZ. (This finding is based on information from the airport or military airfield administrator which identifies the boundaries of such zones) Or the project only involves minor rehabilitation." **Preparer Comments:** The Wendover Airport is a civil airfield owned by Tooele County, Utah. It is the nearest airfield to the proposed action. The nearest point on the proposed action to the airport runway is 8,700 feet distance. The

		proposed action is not located in the path of the runway. Attachment A contains a drawing titled Project Location Map Figure 1 that shows the measurement between the airport runway clear zone and the proposed action. **Direct Impacts:** • The construction of the proposed action would not have direct impacts on the Wendover Airport as it is located outside of the Runway Clear Zone. **Indirect Impacts:** • The construction of the proposed action would not have indirect impacts on the Wendover Airport or surrounding zones and easements. **Compliance Steps and Mitigation:** No Formal Compliance Steps or Mitigation Required. **Documentation:** Please see response by Chris Melville, City Manager, City of West Wendover Dated: January 23, 2023 also located in Attachment B
Coastal Barrier Resources Coastal Barrier Resources Act, as amended by the Coastal Barrier Improvement Act of 1990 [16 USC 3501]	Yes ☐ No ☒	**Preparer Comments:** Nevada is not a costal state. **Direct Impacts:** • The construction of the proposed action would not have direct impacts on coastal resources as it is not located in a state including coastline. **Indirect Impacts:** • The construction of the proposed action would not have indirect impacts on coastal resources as it is not located in a state including coastline and the basin in which the proposed action is located is a

		terminal basin draining into the Great Salt Lake. **Compliance Steps and Mitigation:** No Formal Compliance Steps or Mitigation Required. **Documentation:** Please see FEMA Pacific Ocean Coastal Information Dated: June 1, 2018 located in Attachment C. Please not that this document is no longer posted on the FEMA Website.
Flood Insurance Flood Disaster Protection Act of 1973 and National Flood Insurance Reform Act of 1994 [42 USC 4001-4128 and 42 USC 5154a]	Yes ☐ No ☒	**Consultant Comments:** Comments by Chris Melville, City Manager, City of West Wendover. "The Project does not involve property acquisition, management, construction or improvement within a 100 year flood plain (Zones A or V) Identified by FEMA maps." Per the attached FEMA map "0.2% annual chance of flood; areas of 1% annual chance flood with average depths of less than 1 foot or within drainage areas less than 1 square mile. Zone X" **Compliance Steps and Mitigation:** No Formal Compliance Steps or Mitigation Required. **Documentation:** Please see response by Chris Melville, City Manager, City of West Wendover Dated: January 23, 2023 also located in Attachment D
STATUTES, EXECUTIVE ORDERS, AND REGULATIONS LISTED AT 24 CFR 50.4 & 58.5		
Clean Air Clean Air Act, as amended, particularly section 176(c) & (d); 40 CFR Parts 6, 51, 93	Yes ☒ No ☐	**Consultant Comments:** Comments by Andrew Tucker, Supervisor Planning and Data Management, Nevada Division of Environmental Protection. Formal Compliance Steps Required as follows:

		"It is our understanding that this project is to construct a new fire station that will also include shared parking and utilities in West Wendover, Nevada. Pursuant to NAC 445B.22037, if during the course of a project an area in excess of five (5) acres is disturbed, a surface area disturbance permit is required from the Bureau of Air Pollution Control (BAPC)." "Regardless of the size of the disturbed area, fugitive dust emitted from the project must be controlled at all times through the use of best practical methods. These methods can include, but are not limited to, paving, chemical stabilization, watering, phased construction, and revegetation. For assistance with controlling fugitive dust, please contact the BAPC Compliance Supervisor at (775) 687-9349." "The project conforms to the EPA-approved State Implementation Plan (SIP), per contract with the Sate Air Quality Management District or Board. "This project is not expected to disturb an area in excess of five (5) acres, therefore, a surface area disturbance permit is not required." "In the event a surface area disturbance is required, contact the BAPC Supervisor at (775) 687-9349." "In accordance with NAC 445B.22037, fugitive dust must be controlled at all times during the implementation of this project." **Direct Impacts:** • During construction fugitive dust is anticipated to be an issue in areas disturbed by construction activities. The contractor would be required to take preventative measures using standard best management practices such as watering down spoils piles and disturbed ground.

		Indirect Impacts: • During construction the steps taken to mitigate fugitive dust should minimize indirect impacts off site. • Once construction is completed, spoils piles have been removed and disturbed areas have been revegetated it is not anticipated that the proposed action would have any indirect impacts on air quality. **Compliance steps:** This is a standard requirement with all construction. The contractor will be required to utilize best management practices such as watering disturbed areas and piles and covering or enclosing stock piles to control fugitive dust. If it is found that the disturbed area extends beyond five (5) acres BACP will be contacted to acquire the appropriate permitting. If fugitive dust cannot be controlled by standard best management practices BACP will be contacted for consultation. **Mitigation:** If compliance steps are taken there will be no formal mitigation required. **Documentation:** Please see response by Andrew Tucker, Supervisor Planning and Data Management, Nevada Division of Environmental Protection. Dated: June January 23, 2023 located in Attachment E
Coastal Zone Management Coastal Zone Management Act, sections 307(c) & (d)	Yes ☐ No ☒	**Preparer Comments:** Nevada is not a costal state. **Direct Impacts:** • The construction of the proposed action would not have direct impacts on coastal zones as it is not located in a state including coastline.

		Indirect Impacts: • The construction of the proposed action would not have indirect impacts on coastal zones as it is not located in a state including coastline and the basin in which the proposed action is located is a terminal basin draining into the Great Salt Lake. **Compliance Steps and Mitigation:** No Formal Compliance Steps or Mitigation Required. **Documentation:** Please see FEMA Pacific Ocean Coastal Information Dated: June 1, 2018 located in Attachment C
Contamination and Toxic Substances 24 CFR Part 50.3(i) & 58.5(i)(2)	Yes ☐ No ☒	**Consultant Comments:** Comments by Jeff Knudtson, Fire Chief, City of West Wendover "The Project does not involve new development for habitation; Or the project involves new development for habitation but is not located within one mile of an NPL ("Superfund") site, within 2,000 feet of the CERCLIS site, nor is adjacent to any other known or suspected sites contaminated with toxic chemicals or radioactive materials, unless a federal, state or local authoritative source determines it does not pose a health hazard." **Direct Impacts:** • The construction of the proposed action would not have direct impacts on or be directly impacted by contamination and toxic substances as the site "is not located within one mile of an NPL ("Superfund") site, within 2,000 feet of the CERCLIS site, nor is adjacent to any other known or suspected sites contaminated with toxic chemicals or radioactive materials."

		Indirect Impacts: • The construction of the proposed action will not produce contamination or toxic substances that would indirectly impact the surrounding area. **Compliance Steps and Mitigation:** No Formal Compliance Steps or Mitigation Required. **Documentation:** Please see response by Jeff Knudtson, Fire Chief, City of West Wendover Dated: January 23, 2023 located in Attachment F
Endangered Species Endangered Species Act of 1973, particularly section 7; 50 CFR Part 402	Yes ☐ No ☒	**Consultant Comments:** Comments by Eric Miskow, Aquatic Biologist, Data Manager, Nevada Division of Natural Heritage: There are no at-risk taxa recorded within the given area. However, habitat may be available for, the silver-haired bat, *Lasionycteris noctivagans*, a Nevada Bureau of Land Management (BLM) Sensitive Species, and the Great Basin fishhook cactus, *Sclerocactus pubispinus*, a Nevada BLM Sensitive Species as well as a State Protected Cacti under NAC 503. The Nevada Department of Wildlife (NDOW) manages, protects, and restores Nevada's wildlife resources and associated habitat. Please contact Jinna Larkin, NDOW GIS Coordinator (775) 688-1580 to obtain further information regarding wildlife resources within and near your area of interest. Removal or destruction of state protected flora species (NAC 527.010) requires a special permit from Nevada Division of Forestry (NRS 527.270). **Preparer Comments:** As suggested by Mr. Miskow we have contacted Nevada Department of Wildlife requesting additional information. **Consultant Comments:**

		Comments by Jinna Larkin, GIS / Data Coordinator, Nevada Department of Wildlife Big Game – "Occupied pronghorn antelope distribution exists through entire project area and portions of the four-mile buffer area. Occupied bighorn sheep and elk distributions exist outside the project area within portions of the four-mile buffer area." **Preparer Comments:** Pronghorn antelope are seen in the area but generally stay out of town. **Consultant Comments Continued:** Greater Sage Grouse – "Greater sage – grouse habitat in the vicinity of the project area has primarily been classified as Other habitat by the Nevada Sagebrush Ecosystem Program (http;//sagebrusheco.nv.gov). Please refer to the attached maps for details regarding greater sage-grouse habitat relative to the proposed project area." **Preparer Comments:** The maps show the sage-grouse habitat outside of town. **Consultant Comments Continued:** Lahontan Cutthroat Trout – "are known to exist in the vicinity of the project area in the Willow Canyon Bettridge Creek watershed." **Preparer Comments:** The area mentioned is located several miles out of town and does not even connect with the local watershed. **Consultant Comments Continued:** Raptors -"Various species of raptors, which use diverse habitat types, may reside in the vicinity of the project area." "Raptor Species are protected by State and Federal laws." "There are 15 known raptor nest sites within ten miles of the project area." **Preparer Comments:**

		None of the sites on the raptors list are within the section that the project resides. General: If at any time before or during construction any of the endangered, threatened or candidate species are encountered on or near the project site, the City will consult with NDOW to determine what measures may need to be taken to protect the wildlife. **Direct Impacts:** • There are no known endangered species residing on the site of the proposed action and thus the construction and operation of the proposed action is not anticipated to have any direct impacts on endangered species. **Indirect Impacts:** • There are no known endangered species residing adjacent to the site of the proposed action and thus the construction and operation of the proposed action is not anticipated to have any indirect impacts on endangered species. **Compliance Steps and Mitigation:** No Formal Compliance Steps or Mitigation Required. **Documentation:** Please see response by Jinna Larkin, GIS / Data Coordinator, Nevada Department of Wildlife Dated: February 13, 2023 located in Attachment G **Preparer Comments:** Per the request of Jinna Larkin, Caleb McAdoo – Eastern Region Habitat Supervisor was contacted by phone. We were advised to contact his office if we find evidence of any endangered species on site before or during construction.

Explosive and Flammable Hazards 24 CFR Part 51 Subpart C	Yes ☐ No ☒	**Consultant Comments:** Comments by Jeff Knudtson, Fire Chief, City of West Wendover. "The Project is located at an Acceptable Separation Distance (ASD) from any above ground or flammable fuels or chemicals containers according to Siting of HUD-Assisted projects near Hazardous Facilities OR the project will expose neither people nor buildings to such hazards." **Direct Impacts:** • The construction of the proposed action would not have direct impacts on or be directly impacted by explosive and flammable hazards as the site is separated from above ground or flammable fuels or chemical containers. **Indirect Impacts:** • The construction of the proposed action is not anticipated to introduce or produce explosive and flammable hazards that would indirectly impact the surrounding area. **Compliance Steps and Mitigation:** No Formal Compliance Steps or Mitigation Required. **Documentation:** Please see response by Jeff Knudtson, Fire Chief, City of West Wendover Dated: January 23, 2023 located in Attachment H
Farmlands Protection Farmland Protection Policy Act of 1981, particularly sections 1504(b) and 1541; 7 CFR Part 658	Yes ☐ No ☒	**Consultant Comments:** Comments by Chris Melville, City Manager, City of West Wendover. "The project site does not include prime or unique farmland, OR other farmland of statewide or local importance as identified by the U.S. Department of Agriculture, Soil Conservation Service (SCS); OR project site

		includes prime farmland but is located in an area committed to urban uses." **Direct Impacts:** • The construction of the proposed action would not have direct impacts on farmlands as the project site does not include farmland. **Indirect Impacts:** • The construction of the proposed action will not indirectly impact farmland as no farmland is located the surrounding area. **Compliance Steps and Mitigation:** No Formal Compliance Steps or Mitigation Required. **Documentation:** Please see response by Chris Melville, City Manager, City of West Wendover Dated: January 23, 2023 located in Attachment I
Floodplain Management Executive Order 11988, particularly section 2(a); 24 CFR Part 55	Yes ☐ No ☒	**Consultant Comments:** Comments by Chris Melville, City Manager, City of West Wendover. "The Project does not involve property acquisition, management, construction or improvement within a 100 year flood plain (Zones A or V) Identified by FEMA maps." Per the attached FEMA map "0.2% annual chance of flood; areas of 1% annual chance flood with average depths of less than 1 foot or within drainage areas less than 1 square mile. Zone X" **Compliance Steps and Mitigation:** No Formal Compliance Steps or Mitigation Required. **Documentation:** Please see response by Chris Melville, City Manager, City of West Wendover Dated: January 23, 2023 also located in Attachment D

Historic Preservation National Historic Preservation Act of 1966, particularly sections 106 and 110; 36 CFR Part 800	Yes ☒ No ☐	**Preparer Comments:** The proposed action is taking place on a parcel that was previously under an R&PP Lease Agreement between the BLM and the City of West Wendover. The property is now owned by the City of West Wendover. The proposed action is just one of many actions that were covered in the lease agreement for the development of the City Center also called the City Complex in the Memorandum of Agreement. The existing City Hall / Government Complex was constructed under this agreement. **Documentation:** The Environmental Review Completed by BLM, The R&PP Lease Agreement area located in Attachment J. The Memorandum of Agreement between the BLM and Nevada State Office of Historic Preservation, and the 2006 Letter of Concurrence associated with the Memorandum of Agreement are located in Attachment J. **Preparer Comments:** The Nevada State Historic Preservation Office (SHPO) was sent a request for consultation that included a description of the project, the APE, identification of resources, public and tribal outreach and a determination of effect. SHPO has asked for additional information about the project, additional information about cultural resources that may be in the surrounding area, a more in depth discussion of APE attributes, consultation with the NVCRIS to check for potential resources that have been documented with in the APE. **Direct Impacts:** • The construction of the proposed action does not directly impact the Victory Highway or the transcontinental phone line. At the

		closest point, of the Area of Disturbance Boundary to the Victory Highway is 288 feet. **Indirect Impacts:** • The construction of the proposed action does not indirect impact other offsite historic resources. **Compliance Steps and Mitigation:** • The contractor for the project will be educated about the location of cultural resources within the APE and will be directed that they must be protected. • The contractor will be made aware of the potential disturbance boundary that they will be required to stay within to complete the work. • A protocol will be established with the contractor and resident inspector to stop work and notify appropriate people of if any cultural resources are encountered during the work. **Preparer Comments:** The original environmental review by BLM as well as the MOA and supporting documents are included as background information to provide context. **Documentation:** The following documents associated with the Section 106 compliance are located in Attachment J. 2006 Concurrence Letter from Ronald M. James, State Historic Preservation Officer, Dated August 9, 2006 Memorandum of Agreement – Among the Elko Field Office of the Bureau of Land Management and the Nevada State Historic Preservation Officer, and the City of West Wendover, Nevada – Regarding Resolution

		of Adverse Effects From Leasing 124.67 Acres of Public Land, Dated August 3, 2006 The following documents produced by the Bureau of Land Management are located in Attachment J. United States Department of Interior Bureau of Land Management - Phase 1 Environmental Site Assessment – Wendover Recreation & Public Purposes Lease – Elk County, Nevada – T. 33 N., R. 70 E., M.D.B.&M. Portion of: Section 8 E1/2 SE1/4 SE1/4; Portion of: Section 9 SW1/4 SW1/4; Portion of Section 16 NW1/4 NW1/4 - February 2006 Victory Highway (US40) - One-mile segment west of West Wendover and south of Interstate 80 – West Wendover Vicinity – Elko County, Nevada HAER NV-41 – Historic American Engineering Record – Pacific West Regional Office – National Park Service – U.S. Department of the Interior. See HAER (Historic American Engineering Record) http://www.loc.gov/pictures/collection/hh/item/nv0394/. For convenience a copy of the document is also located in Attachment J.
Noise Abatement and Control Noise Control Act of 1972, as amended by the Quiet Communities Act of 1978; 24 CFR Part 51 Subpart B	Yes ☐ No ☒	**Consultant Comments:** Comments by Raul Naranjo, City of West Wendover Public Works Director "The project does not involve development of noise sensitive uses, or the ambient noise level at the project site is 65LDN (or CNEL) or less." **Direct Impacts:** • Additional noise will be created during the construction of the proposed action but not at levels that

		will increase the overall ambient noise level to a dangerous or nuisance level. • Noise levels associated with the use of the constructed facility will be no louder than the noise found along the surrounding streets. **Indirect Impacts:** • Additional noise will be created during the construction of the proposed action, but surrounding areas are sparsely developed, and no residences are located adjacent to the proposed action. • Noise levels associated with the use of the constructed facility will be no different than the ambient noise found along the surrounding streets. **Compliance Steps and Mitigation:** No Formal Compliance Steps or Mitigation Required. **Documentation:** Please see response by Raul Naranjo, City of West Wendover Public Works Director Dated: January 23, 2023 located in Attachment K
Sole Source Aquifers Safe Drinking Water Act of 1974, as amended, particularly section 1424(e); 40 CFR Part 149	Yes ☐ No ☒	**Consultant Comments:** Comments by Brendon Grant, P.E. Engineering Branch Supervisor, Bureau of Safe Drinking Water Nevada Division of Environmental Protection Compliance steps may be required as explained below: "The project is not located within an area designated by EPA as being supported by a sole source aquifer," "The BDSW is unable to determine if a water project was submitted for approval and review prior to construction in 2007. The BDSW requests as-builts of the construction, a network hydraulic analysis that

		demonstrates fire flow and fire demand can be met at the fire hydrant, and a standard detail that shows the installation of a reduced pressure principle assembly on the water service, fire service and irrigation lines." **Preparer Comments:** The project will be designed so that mitigation is not required. **Direct Impacts:** • The proposed action is not located in an area designated as a soul source aquifer but will include connection to existing water facilities. **Indirect Impacts:** • Once the proposed action is constructed additional water will be required to serve the proposed action. The current system has the capacity and the water to safely serve the proposed action. **Compliance steps:** Provide the as-builds for the culinary water line serving the proposed action along with a hydraulic analysis to show that adequate fire flow can be provided to the fire hydrant serving the proposed action as well as a standard detail for a reduced pressure principle assembly on the water service, fire service and irrigation service. **Mitigation:** If compliance steps are taken there will be no formal mitigation required. **Documentation:** Please see response by Brendon Grant, P.E. Engineering Branch Supervisor, Bureau of Safe Drinking Water Nevada Division of Environmental Protection. Dated: March 20, 2023 located in Attachment L.
Wetlands Protection	Yes No	**Consultant Comments:**

Executive Order 11990, particularly sections 2 and 5	☒ ☐	Comments by Zack Carter, Environmental Scientist 3, Department of Conservation and Natural Resources Nevada Division of Environmental Protection "The project does not involve new construction within or adjacent to a wetland. The project does not affect a wetland identified by any pertinent planning document or by field observation. The Delineation of wetlands is based on consultation with U.S. Corps of Engineers, U.S. Fish & Game Service or State Fish and Game." "The proposed construction of the fire station in west Wendover, Nevada will avoid any impacts to wetlands identified in the National Wetlands Inventory. This review is based on a desktop analysis of the proposed project site and does not constitute a formal delineation of aquatic resources at this location. All federal, state and local permit conditions must be followed for construction. Best management practices to prevent erosion and control settlement should be implemented to prevent discharge into all identified drainages or waterbodies." **Direct Impacts:** • The site does not include any wetlands nor do any wetlands reside adjacent to or directly below the location of the proposed action and thus does not directly impact any wetlands. **Indirect Impacts:** • As stormwater that runs through the site or is generated by the site may eventually flow to wetlands erosion and sediment control measures will be required through construction to maintain the quality of stormwater flow and protect drainages from sedimentation due to construction. **Compliance steps:**

		Provide erosion and sediment control. **Mitigation:** If compliance steps are taken there will be no formal mitigation required. **Documentation:** Please see response by Zack Carter, Environmental Scientist 3, Department of Conservation and Natural Resources Nevada Division of Environmental Protection. Dated: February 13, 2023; located in Attachment M.
Wild and Scenic Rivers Wild and Scenic Rivers Act of 1968, particularly section 7(b) and (c)	Yes ☐ No ☒	**Preparer Comments:** Nevada does not have any Wild and Scenic Rivers. **Direct Impacts:** • As Nevada does not have any wild and scenic rivers the proposed action will not directly impact any wild and scenic rivers **Indirect Impacts:** • As Nevada does not have any wild and scenic rivers the proposed action will not indirectly impact any wild and scenic rivers **Compliance Steps and Mitigation:** No Formal Compliance Steps or Mitigation Required. **Documentation:** Please see the Query for Nevada from National Wild and Scenic Rivers Council Website: http://www.rivers.gov/nevada.php The National Wild and Scenic Rivers Council is supported in partnership between the United States Bureau of Land Management, National Park Service, U.S. Fish and Wildlife and U.S. Forest Service. The query is Dated: January 23, 2023 and is located in Attachment N
ENVIRONMENTAL JUSTICE		

Environmental Justice Executive Order 12898	Yes ☐ No ☒	**Consultant Comments:** The proposed action was found to have a positive impact on the following areas of Environmental Justice: Aesthetic Values, Community Cohesion, Community Growth, Local Property Values, Public Facilities, Public Services, Regional Growth, Employment and Labor Force, Business and Industrial Activity, and Disadvantaged Population. The proposed action was found to have a neutral impact on the following areas of Environmental Justice: Noise, Tax Revenues, Displacement of Farms, Manmade Resources, Natural Resources, Air Quality, Water Quality, and Displacement of People. The proposed action was found to have no negative impacts on the 18 areas of Environmental Justice taken into consideration. **Direct Impacts:** • The construction of the proposed action will provide increased employment opportunities to the community both during construction and as a result of the construction as the project will make available adequate public safety services for continued growth and to develop additional businesses in town. • Local business activity will increase. • Tax revenue will increase due to the increased employment and business activity. **Indirect Impacts:** • Residents will benefit as the centrally located fire station will provide the shortest emergency response times to the community. • **Compliance Steps and Mitigation:**

		No Formal Compliance Steps or Mitigation Required. **Documentation:** Please see response by Chris Melville, City Manager, City of West Wendover Dated: January 23, 2023 located in Attachment O

Additional Studies Performed:
United States Department of Interior Bureau of Land Management - Phase 1 Environmental Site Assessment – Wendover Recreation & Public Purposes Lease – Elk County, Nevada – T. 33 N., R. 70 E., M.D.B.&M. Portion of: Section 8 E1/2 SE1/4 SE1/4; Portion of: Section 9 SW1/4 SW1/4; Portion of Section 16 NW1/4 NW1/4 - February 2006

Victory Highway (US40) - One-mile segment west of West Wendover and south of Interstate 80 – West Wendover Vicinity – Elko County, Nevada HAER NV-41 – Historic American Engineering Record – Pacific West Regional Office – National Park Service – U.S. Department of the Interior – December 2006

Both studies are located in Attachment J.

Field Inspection (Date and completed by)**:**

December 12, 2023 by Shay Stark - Photo documentation is found in the consultation request for the Nevada State Historic Preservation Office located in Attachment J.

List of Sources, Agencies and Persons Consulted [40 CFR 1508.9(b)]**:**

Airport Clear Zones and Accident Potential Zones:
Chris Melville, City Manager & Community Development Director, City of West Wendover, P.O. Box 2825, 1111 North Gene L. Jones Way, West Wendover Nevada, 89883. Phone: 775-664-3081 Email: cmelville@westwendovercity.com

Coastal Barrier Resources:
FEMA website:
http://www.fema.gov/pacific -ocean-coastal-information. This link is not currently available and has not been replaced with another usable link.

Flood Insurance:

Chris Melville, Flood Plain Manager, City of West Wendover, P.O. Box 2825, 1111 North Gene L. Jones Way, West Wendover Nevada, 89883. Phone: 775-664-3081 Email: cmelville@westwendovercity.com

Zack Carter, Environmental Scientist 3, Department of Conservation and Natural Resources Nevada Division of Environmental Protection, 901 S. Stewart, St. 4001, Carson City, Nevada 89701-5249, Phone: 775-687-9456 E-mail: zcarter@ndep.nv.gov

Air Quality:
Andrew Tucker, Supervisor Planning and Mobile Sources Branch, Nevada Division of Environmental Protection, 901 South Stewart Street, Suite 4001, Carson City, Nevada 89701. Phone: 775-687-9392 E-mail: sjaunara@ndep.nv.gov.

Coastal Zone Management:
FEMA website:
http://www.fema.gov/pacific -ocean-coastal-information. This link is not currently available and has not been replaced with another usable link.

Toxic/Hazardous/Radioactive Materials, Contamination, Chemicals, or Gasses:
Jeff Knudtson, Fire Chief, City of West Wendover, P.O. Box 2825, 1111 North Gene L. Jones Way, West Wendover Nevada, 89883. Phone: 775-664-2274 E-mail: jknudtson@westwendovercity.com

Endangered Species Act:

Eric Miskow, Biological Data Manager, Nevada Natural Heritage Program, 901 S Stewart St Suite 5004, Carson City, NV 89701, Phone: 775-684-2905 E-mail: emiskow@heritage.nv.gov

Jinna Larkin, GIS/Data Coordinator, Nevada Department of Wildlife, 6980 Sierra Center Parkway, Suite 120, Reno, NV 8951, Phone: (775) 688-1580 E-mail: jhlarkin@ndow.org

Caleb McAdoo, Eastern Region Habitat Supervisor, Nevada Department of Wildlife, Elko Regional Office. 60 Youth Center Road, Elko, NV 89801 Phone: 775-777-2306 E-mail: cmcadoo@ndow.org

Siting of HUD – Assisted Projects near Hazardous Operations:
Jeff Knudtson, Fire Chief, City of West Wendover, P.O. Box 2825, 1111 North Gene L. Jones Way, West Wendover Nevada, 89883. Phone: 775-664-2274 E-mail: jknudtson@westwendovercity.com

Farmland Protection Policy Act:
Chris Melville, City Manager, City of West Wendover, P.O. Box 2825, 1111 North Gene L. Jones Way, West Wendover Nevada, 89883. Phone: 775-664-3081 Email: cmelville@westwendovercity.com

Flood Plain Management:
Chris Melville, Flood Plain Manager, City of West Wendover, P.O. Box 2825, 1111 North Gene L. Jones Way, West Wendover Nevada, 89883. Phone: 775-664-3081 Email: cmelville@westwendovercity.com

Historic Preservation:

Rebecca Palmer, State Historic Preservation Officer, Nevada State Historic Preservation Office, 901 South Stewart Street, Suite 5004. Carson City, Nevada 89701-5248. Phone: 775-684-3443 E-mail: rlpalmer@shpo.nv.gov

Karyn de Dufour Nevada State Historic Preservation Office NVCRIS Manager Department of Conservation and Natural Resources, 901 South Stewart Street, Suite 5004. Carson City, Nevada 89701-5248. Phone: 775-684-3447 E-mail: kdedufor@shpo.nv.gov

Previous recent cultural resources consultation With BLM (While not directly involved with the proposed action these are the staff members at BLM who are familiar with the BLM Environmental Review and the resulting MOA that allowed the construction of the City Hall / Government Complex. They worked through with these documents and with SHPO in 2018 for The City of West Wendover Downtown Development Infrastructure Project which was located on another portion of the affected parcel):

Karen Uhri, Realty Specialist, Bureau of Land Management, Elko District~Wells Field Office, 3900 East Idaho Street, Elko, NV 89801, Phone: 775-753-0378 E-mail: kuhri@blm.gov

Dayna M. Reale, Cultural Resources Specialist, BLM Elko District Wells Field Office, 3900 Idaho St., Elko, NV 89801, Phone: (775) 753-0296 E-mail: dreale@blm.gov

Noise Abatement and Control:
Raul Naranjo, Public Works Director, City of West Wendover, P.O. Box 2825, 1111 North Gene L. Jones Way, West Wendover Nevada, 89883. Phone: 775-664-3363 Email: rnaranjo@westwendovercity.com

Sole Source Aquifers:
Brendon Grant P.E. Engineering Branch Supervisor, Bureau of Safe Drinking Water, Nevada Division of Environmental Protection, 901 S. Stewart Street, Suite 4001, Carson City Nevada 89701. Phone: 775-687-9524 E-mail: bgrant@ndep.nv.gov

Wetlands Protection:
Zack Carter, Environmental Scientist 3, Department of Conservation and Natural Resources Nevada Division of Environmental Protection, 901 S. Stewart, St. 4001, Carson City, Nevada 89701-5249, Phone: 775-687-9456 E-mail: zcarter@ndep.nv.gov

Wild and Scenic Rivers Act: National Wild and Scenic Rivers Council Website http://www.rivers.gov/nevada.php This web site is maintained by: United States Bureau of Land Management, National Park Service, United State Fish and Wildlife Service, and the United States Forest Service.

Environmental Justice:
Chris Melville, City Manager & Community Development Director, City of West Wendover, P.O. Box 2825, 1111 North Gene L. Jones Way, West Wendover Nevada, 89883. Phone: 775-664-3081 Email: cmelville@westwendovercity.com

List of Permits Obtained:

The permits required for the proposed project all require engineered drawings for approval. The Engineered drawings will come once the project is completely funded. The permits that will be required include:

- Approval of the water system improvements by NDEP
- Storm water pollution prevention plan SWPPP
- Building and Construction permitting by the City

Public Outreach [24 CFR 50.23 & 58.43]**:**

Public Hearings were held August 02, 2022, September 06, 2022 and November 01, 2022, to allow the public to provide options for proposed projects and then comment on the proposed projects prior to selection of a project for funding. The notices, agendas, and minutes of each meeting can be found in Attachment Q.

Cumulative Impact Analysis [24 CFR 58.32]**:**

The mitigation for the Victory Highway is an example of aggregation that has occurred of which the proposed action has been apart. The City Center Master Plan was developed in the year 2000. When the BLM made the land available in 2006 the City recognized that the Victory Highway would be impacted by the fulfillment of the City Center Master Plan. Recognizing this the City took this into account and created the interpretative area to mitigate the impact with the first phase of development. The current proposed action is a beneficiary of previous aggregation. As each phase is designed the complete plan is considered and utilities are stubbed out and sized to address the needs of future phases. Because of this the utilities that would serve the proposed action were stubbed out with previous phases. The environmental considerations of the proposed action have taken into account the effects on the Complete City Center Master Plan.

Below is a summary table for the direct and indirect impacts considered with the proposed action. Please see the explanations found in the descriptions of the various factors for details describing the impacts.

Factor	Summary of Direct and Indirect Impacts	Impact
Airport Hazards	Direct Impacts: • No impact. Indirect Impacts: • No impact.	Neutral Neutral
Coastal Barrier Resources	Direct Impacts: • No impact. Indirect Impacts: • No impact.	Neutral Neutral
Flood Insurance	Direct Impacts: • Will not create new onsite flood risks that would affect flood insurance. Indirect Impacts: • Will not create new offsite flood risks that would affect flood insurance.	Neutral Neutral
Clean Air	Direct Impacts: • Construction activity may generate fugitive dust. Indirect Impacts: • Mitigation of fugitive dust should minimize indirect impacts off site. • No impact anticipated from completed action.	Minor Adverse Neutral Neutral
Coastal Zone Management	Direct Impacts: • No impact. Indirect Impacts: • No impact.	Neutral Neutral
Contamination and Toxic Substances	Direct Impacts: • No impact. Indirect Impacts: • No impact.	Neutral Neutral
Endangered Species	Direct Impacts: • No anticipated impact but will address if situation changes.	Neutral

	Indirect Impacts: • No anticipated impact but will address if situation changes.	Neutral
Explosive and Flammable Substances	Direct Impacts: • No impact. Indirect Impacts: • No impact.	Neutral Neutral
Farmlands Protection	Direct Impacts: • No impact. Indirect Impacts: • No impact.	Neutral Neutral
Floodplain Management	Direct Impacts: • Will not create new onsite flood risks. Indirect Impacts: • Will not create new offsite flood risks.	Neutral Neutral
Historic Preservation	Direct Impacts: • The proposed action does not affect the known historic resources. Indirect Impacts: • No offsite impacts.	Neutral Neutral
Noise Abatement and Control	Direct Impacts: • No impact during construction. • No impact with use of facilities. Indirect Impacts: • No impact during construction. • No impact with use of facilities.	Neutral Neutral Neutral Neutral
Sole Source Aquifer	Direct Impacts: • No impact due to no sole source aquifer. Indirect Impacts: • Additional water and capacity will be required to serve the Fire Station but this water and capacity is currently available as it was designed into the City Hall Government Complex in anticipation of this project.	Neutral Neutral

Wetlands Protection	Direct Impacts: • No impact. Indirect Impacts: • Erosion and sediment control measures will be required to minimize possible down gradient impact.	Neutral Neutral
Wild and Scenic Rivers	Direct Impacts: • No impact. Indirect Impacts: • No impact.	Neutral Neutral
Environmental Justice	Direct Impacts: • Provide increased employment opportunities expand opportunities for commercial development. • Local business activity will increase. • Tax revenue will increase. Indirect Impacts: • Development will spur additional commercial growth and activity within the City. • Provide additional employment opportunities and increase the local diversity of goods and services. • Additional tax revenue allows expansion and diversification of public services.	Beneficial Beneficial Beneficial Beneficial Beneficial Beneficial

Alternatives [24 CFR 58.40(e); 40 CFR 1508.9]

In 2001 the City of West Wendover adopted a City Center Master Plan that addresses the parcel upon which the Proposed Facility would be located. It's central location in the community placed it in a position where most residents pass through this area multiple times a day. To the east along Wendover Boulevard lies the hospitality and entertainment district which is essentially the employment and tourism core of the community. To the south beyond Wendover Boulevard lie the residential districts. Along Wendover Boulevard and Pueblo Boulevard lies the core of the commercial shopping district providing the daily necessities for the residents. The City recognized that the location of the proposed action was a central location in the City. Because of this the site was chosen for City Hall Government Complex.

In considering alternatives the fire station could be located on a different parcel if one were available but it would need to be centrally located. The only land that is centrally located along Wendover Boulevard is the City owned property that was initially leased and now has been purchased from BLM. The reason the fire station and other government complex occupants is located back from the boulevard and not directly on it is that a remnant of the historic Victory

Highway is located a couple of hundred feet off the Boulevard and the City desires to protect this cultural resource and utilize the ground around it as a public park and as an outdoor museum. Locating the facilities further back on the property has also had a benefit of requiring intersections for the access to the facility which has limited traffic directly in front of the facilities allowing on the road and up to speed quickly and then utilizing intersections to access Wendover Boulevard, puts the entry onto the Boulevard at an expected location to have traffic entering. This configuration has worked well for the police department which currently occupy the government complex and is anticipated to work well for fire and ambulance services.

Preferred Alternative

The proposed facility at the proposed location is the preferred alternative. Other locations on the City owned parcels are the only options that meet the need for a central location that directly accesses Wendover Boulevard. Constructing the fire station in its original proposed location within the City Hall Government Complex capitalizes on the efficiencies of the site utilizing shared utilities, access, parking, and backup power.

No Action Alternative [24 CFR 58.40(e)]:

The no action alternative is not a feasible alternative at this point nor has it been at any point since the City incorporated. The City's existing fire station is located on leased private property. The property is very small and does not allow for expansion. The City already stores some fire equipment outside because the building is too small to hold all of the necessary equipment. The city has grown out of this facility and needs a new location that is centrally located on Wendover Boulevard and allows for room to expand as growth requires.

Summary of Findings and Conclusions:

The following Compliance Factors require no additional compliance steps or mitigation: Airport Hazards, Coastal Barrier Resources, Flood Insurance, Coastal Zone Management, Contamination and Toxic Substances, Endangered Species, Explosive and Flammable Hazards, Farmland Protection, Floodplain Management, Noise Abatement and Control, Wild and Scenic Rivers, and Environmental Justice.

The following Compliance Factors may require additional compliance steps: Clean Air, Historic Preservation Sole Source Aquifers and Wetlands Protection. The compliance steps have been summarized in the following section titled Mitigation Measures and Conditions.

By taking the actions required with respect to Air Quality, Historic Preservation Sole Source Aquifers, and Wetlands Protection the proposed action any potential adverse impacts can either be avoided or mitigated to a point that it is reasonable to reach a determination of a Finding of No Significant Impact due to the construction and existence of the proposed action.

Mitigation Measures and Conditions [40 CFR 1505.2(c)]

Summarize below all mitigation measures adopted by the Responsible Entity to reduce, avoid, or eliminate adverse environmental impacts and to avoid non-compliance or non-conformance with the above-listed authorities and factors. These measures/conditions must be incorporated into project contracts, development agreements, and other relevant documents. The staff responsible for implementing and monitoring mitigation measures should be clearly identified in the mitigation plan.

Summary Table of Compliance Steps Mitigation Measures

Law, Authority, or Factor	Responsible Party	Compliance Steps & Mitigation Measures
Clean Air	Contractor Contractor	1.Control Fugitive Dust 2.Obtain surface disturbance permit with NDEP BACP if disturbance is greater than 5 acres.
Historic Preservation	City/Contractor City/Contractor City/Contractor	1. The contractor for the project will be educated about the location of cultural resources within the APE and will be directed that they must be protected. 2. The contractor will be made aware of the potential disturbance boundary that they will be required to stay within to complete the work. 3. A protocol will be established with the contractor and resident inspector to stop work and notify appropriate people of if any cultural resources are encountered during the work.
Sole Source Aquifer	Design Engineer	Provide the as-builds for the culinary water line serving the proposed action along with a hydraulic analysis to show that adequate fire flow can be provided to the fire hydrant serving the proposed action as well as a standard detail for a reduced pressure principle assembly on the water service, fire service and irrigation service.
Wetlands Protection	Contractor	Provide Erosion and Sediment Control

Determination:

☒ **Finding of No Significant Impact** [24 CFR 58.40(g)(1); 40 CFR 1508.27]
The project will not result in a significant impact on the quality of the human environment.

☐ **Finding of Significant Impact** [24 CFR 58.40(g)(2); 40 CFR 1508.27]
The project may significantly affect the quality of the human environment.

Preparer Signature:____  _____Date:__08/17/2023_

Name/Title/Organization: Shay Stark, Planner, AQUA Engineering

Certifying Officer Signature: _____Date:_____

Name/Title/Organization: Jasie Holm, Mayor, City of West Wendover

This original, signed document and related supporting material must be retained on file by the Responsible Entity in an Environmental Review Record (ERR) for the activity/project (ref: 24 CFR Part 58.38) and in accordance with recordkeeping requirements for the HUD program(s).

Attachment A

Project Description and Associated Drawings

A 7.5 USGS Quad Map with the project location marked on the map has been provided for clarity.

The Project Description, and Figures 1 and the 10 page Concept Design Package were provided with each solicitation to review the project.

Documents included:

- Project Location Map Wendover – 7.5 minute Quadrangle – Wendover Quadrangle – Wendover Nevada-Utah – 1972.
- Drawing Figure 1 City of West Wendover Fire Station #13 Project Location Map (includes distance to airport runway clear zone).
- Project Description.
- Concept Design Package (10 Pages) for City of West Wendover Fire Station #13 Project Provided by TSK Architects.

Location of Proposed Action
SW1/4, SW1/4, Section 9
T 33 N R 70 E MDB&M

WENDOVER QUADRANGLE,
NEV. - UTAH

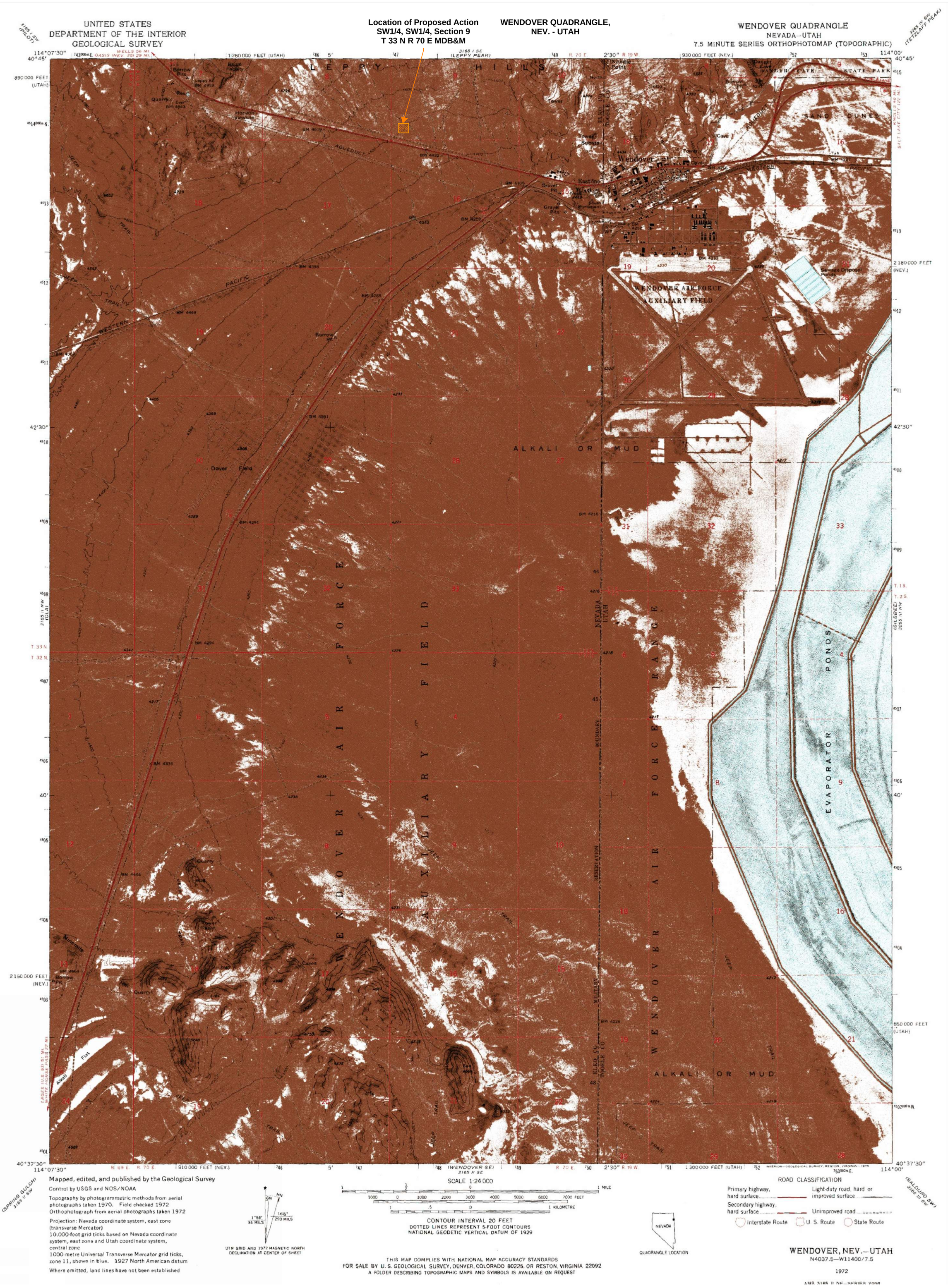

FIGURE G-1

West Wendover Fire Station #13

Project Description

Location: A portion of the W 1/2 of the SW ¼ of the SW/14 of Section 9 T. 33 N. R. 70 E., M.D.B.&M.

Need for Proposed Action:

The West Wendover Fire Station was constructed in the 1980's by Elko County when the community was a "Township" under the general jurisdiction of Elko County with a community population of approximately 1,500. In 1991, the City of West Wendover became incorporated and inherited the County's facilities. The city proceeded to grow in population surpassing 5,000 people. The fire station was no longer able to meet the space and operational requirements and provide efficient and effective local government operations.

The current 1980's fire station is a 4,400 square foot leased facility on approximately 1 acre of property at 975 Wendover Boulevard on the east side of the community. Due to the lack of indoor storage the Fire Department stores its HazMat response and Mobile Command unit along with additional equipment items outdoors which shortens the life span of the equipment.

Though the 3 short-bay facility was adequate for the needs of the fire service in the early 1980's under Elko County when it was constructed, today the facility is too small, outdated and as noted, the City leases the property/facility from a private holding which limits the options for the city in the long-term.

The proposed West Wendover Fire Station is an important long-term public safety facility for the City of West Wendover. Originally planned in 2007 to be part of the construction of the City Hall Government Complex, due to cost, the Fire Station portion of the project was delayed. The proposed site is central to the community and allows the shared use of parking and utilities to minimize the necessary footprint and to provide operational efficiencies. The proposed action will provide a centralized location with a facility that is designed to serve the city well into the future.

Description of Proposed Action:

The proposed action includes construction of a public street with turnaround approximately 780 feet in length to serve a future commercial district. The project includes construction of the following improvements:

- Area of Disturbance (Fire station site, utility connections in North Gene L. Jones Way, construction of segment of new public street, relocation of stormwater channel and additional city hall parking.): 3.80 acres.
- Completed Fire Station Site Area: 55,100 square feet or 1.26 acres.
- Building Area: 11,383 square feet.
- Paved Area (fire station site): 0.37 acres or 28.97% of site.
- Building Includes: 5 apparatus bays.
- Building Includes: Offices and activity center including kitchen, dayroom, and equipment storage.
- Approximately 250-foot-long segment of new public street for access to fire station.
- Additional joint use parking at City Hall containing 7 stalls.
- See attached conceptual drawings for location and proposed layout.

City of West Wendover Fire Station #13 Project Location Map



0 0.13 0.25 0.5 Miles

N

FIGURE 1

CONCEPT DESIGN

ARCHITECTURAL DRAWINGS

CONCEPT SITE PLAN

NOTE: Refer to digital attachments for full-size drawings



1 CONCEPT SITE PLAN REDUCED
SCALE: 1" = 20'-0"

0' 10' 20' 40' 60'

NORTH

CONCEPT FLOOR PLAN

NOTE: Refer to digital attachments for full-size drawings

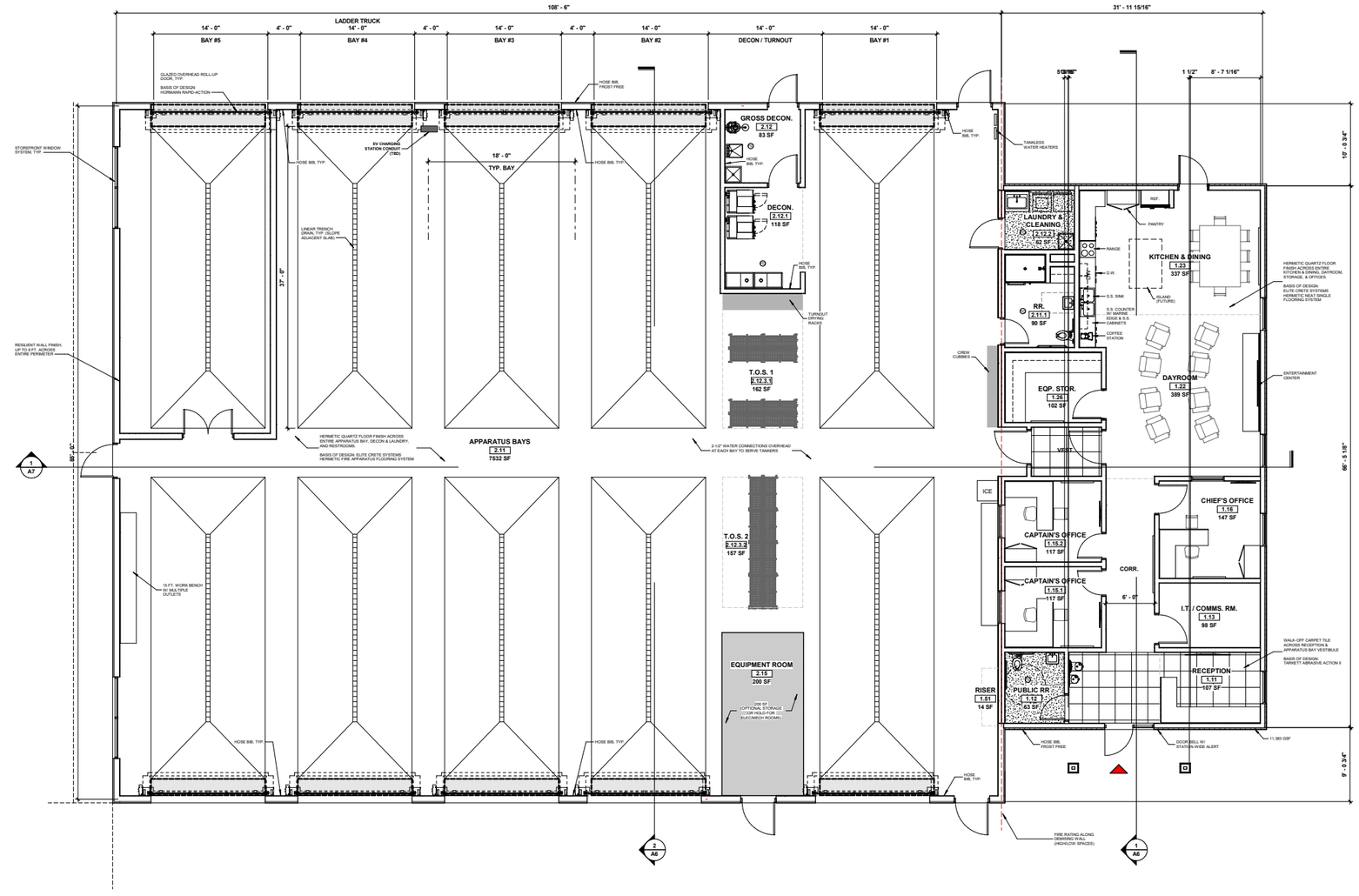

1 CONCEPT FLOOR PLAN - 5-BAY CONFIGURATION
SCALE: 3/16" = 1'-0"

11,383 SF

0' 4' 8' 16' 24'

NORTH

CONCEPT DESIGN

ARCHITECTURAL RENDERINGS

SE AERIAL VIEW



NE EYE-LEVEL VIEW



SE EYE-LEVEL VIEW



SW EYE-LEVEL VIEW



CONCEPT DESIGN

TECHNICAL ANALYSIS

CIVIL DESIGN - SITE PLAN

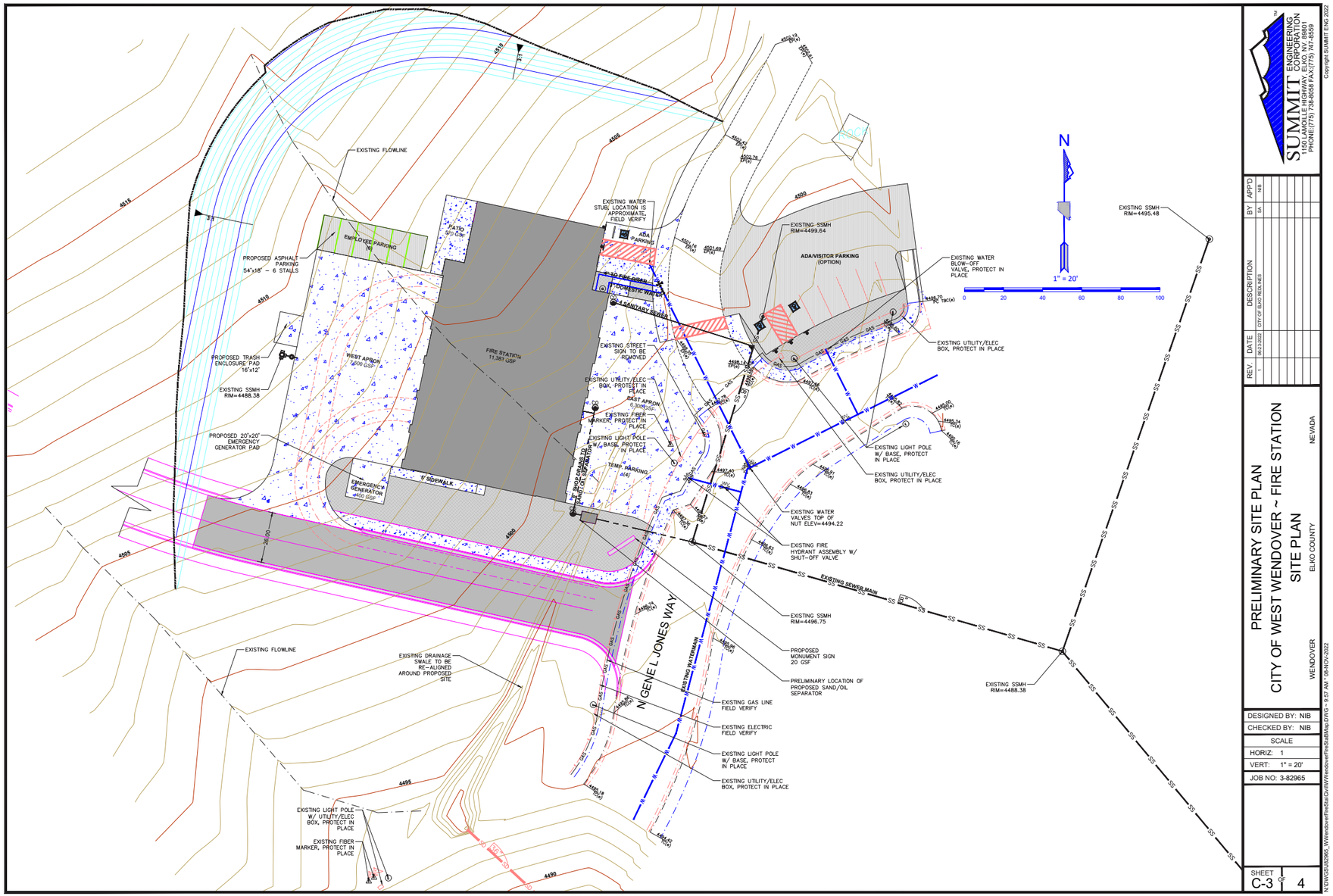

SUMMIT ENGINEERING CORPORATION
1150 LAMOILLE HIGHWAY, ELKO, NV. 89801
PHONE:(775) 738-8055 FAX:(775) 747-8259

Copyright SUMMIT E/N/3 2022

REV.	DATE	DESCRIPTION	BY	APP'D
1	9/23/2022	CITY OF ELKO RED-LINES	MS	MB

PRELIMINARY SITE PLAN
CITY OF WEST WENDOVER ~ FIRE STATION
SITE PLAN
ELKO COUNTY NEVADA
WENDOVER

DESIGNED BY: NIB
CHECKED BY: NIB
SCALE
HORIZ: 1
VERT: 1" = 20'
JOB NO: 3-82965

SHEET C-3 OF 4

N:\DWGS\82965_WWendoverFireStat\Civil\WWendoverFireStatMap.DWG - 9:57 AM - 08-NOV-2022

Attachment B

Airport Clear Zones and Accident Potential Zones

Documents included:

- Solicitation Letter to Chris Melville, City Manager, City of West Wendover; Dated January 19, 2023.
- Signed Response from Chris Melville, City Manager, City of West Wendover; Dated January 23, 2023.

January 19, 2023

Chris Melville
Community Development Director
P.O. Box 2825
West Wendover, Nevada 89883

Attention: Mr. Melville,

Re: Environmental Review – City of West Wendover – Fire Station #13: Airport Clear Zones and Accident Potential Zones

The City of West Wendover is applying for funds through the Nevada Community Development Block Grant Program (CDBG), and the United States Department of Agriculture – Rural Development, to undertake the following project: City of West Wendover – Fire Station #13. Enclosed is a description of the proposed action, project drawings and maps and a form for your review of the project.

Thank you for your assistance on this Environmental Review. Please do not hesitate to contact me if you need any information on the proposed action. My contact information is found at the bottom of the review form. Please feel free to e-mail your response to: shay.stark@aquaeng.com.

Sincerely,

Shay Stark
Project Manager

Enclosures: Project Description
Project Drawings and Maps
Environmental Review Form

ENVIRONMENTAL REVIEW: HUD STANDARDS FOR AIRPORT CLEAR ZONES AND ACCIDENT POTENTIAL ZONES

Grantee: City of West Wendover Project Name: Fire Station #13

Pursuant to Department of Housing and Urban Development requirements for CDBG projects, the grant recipient assumes the responsibility for environmental review, decision making and actions required by local, state and federal environmental laws or authorities. In order to complete the environmental review requirements, we are requesting your review of the project with respect to the threshold for the Airport Clear Zones and Accident Potential Zones. The pertinent HUD standards for these environmental considerations include the following criteria, standards, policies and/or regulations:

1. 24CFR Part 51, Subpart D, Siting of HUD Assisted Projects in Runway Clear Zones at Civil Airports and Clear Zones and Accident Potential Zones at Military Airfields. (49 FR 877, January 6, 1980.)

Please check either line A or B below and add any applicable comments in the space provided. Please feel free to attach any additional comments.

____ A. The project is not within an FAA designated civilian airport Runway Clear Zone (RCZ), or within a military Airfield Clear Zone (CZ) or APZ. (This finding is based on information from the airport or military airfield administrator which identifies the boundaries of such zones) OR the project involves only minor rehabilitation.

____ B. For the sale or purchase of existing property in a RCZ or CZ, notify buyer of this fact and obtain buyer's signature acknowledging receipt of this information. It is HUD policy not to provide any development assistance, subsidy or insurance in RCZs or CZs unless the project will not be frequently used or occupied by people and the airport operator provides written assurances that there are no plans to purchase the project site.

Comments:

_____

Signature/Title Date

Please address reply to:

Shay Stark
AQUA Engineering
533 West 2600 South, Suite 275
Bountiful Utah 84010

Phone: 801-299-1327 ext. 3731
Email: shay.stark@aquaeng.com

ENVIRONMENTAL REVIEW: HUD STANDARDS FOR AIRPORT CLEAR ZONES AND ACCIDENT POTENTIAL ZONES

Grantee: City of West Wendover Project Name: Fire Station #13

Pursuant to Department of Housing and Urban Development requirements for CDBG projects, the grant recipient assumes the responsibility for environmental review, decision making and actions required by local, state and federal environmental laws or authorities. In order to complete the environmental review requirements, we are requesting your review of the project with respect to the threshold for the Airport Clear Zones and Accident Potential Zones. The pertinent HUD standards for these environmental considerations include the following criteria, standards, policies and/or regulations:

1. 24CFR Part 51, Subpart D, Siting of HUD Assisted Projects in Runway Clear Zones at Civil Airports and Clear Zones and Accident Potential Zones at Military Airfields. (49 FR 877, January 6, 1980.)

Please check either line A or B below and add any applicable comments in the space provided. Please feel free to attach any additional comments.

X A. The project is not within an FAA designated civilian airport Runway Clear Zone (RCZ), or within a military Airfield Clear Zone (CZ) or APZ. (This finding is based on information from the airport or military airfield administrator which identifies the boundaries of such zones) OR the project involves only minor rehabilitation.

____ B. For the sale or purchase of existing property in a RCZ or CZ, notify buyer of this fact and obtain buyer's signature acknowledging receipt of this information. It is HUD policy not to provide any development assistance, subsidy or insurance in RCZs or CZs unless the project will not be frequently used or occupied by people and the airport operator provides written assurances that there are no plans to purchase the project site.

Comments:

[redacted], City Manager 1-23-2023

Signature/Title Date

Please address reply to:

Shay Stark
AQUA Engineering
533 West 2600 South, Suite 275
Bountiful Utah 84010

Phone: 801-299-1327 ext. 3731
Email: shay.stark@aquaeng.com

Revised.1/19/2023.ksl

Attachment C

Coastal Barrier Resources / Coastal Zone Management

Documents included:

- FEMA Pacific Ocean Coastal Information printed from https://www.fema.gov/pacific-ocean-coastal-information on June 1, 2018 This link is currently not available.

FEMA (/) Pacific Ocean Coastal Information

Navigation

Search

Languages

This page contains information on the status of flood studies and mapping efforts for the U.S. Pacific Coast and offers educational resources on this topic. This page is intended for community members, stakeholders and officials living near or on the Pacific Coast, as well as mapping professionals.

Protecting Homes (/protecting-homes)

- Coastal Flood Risks (/coastal-flood-risks-achieving-resilience-together)

Great Lakes Coastal Information (/great-lakes-coastal-information)

Gulf of Mexico Coastal Information (/gulf-mexico-coastal-information)

Atlantic Ocean Coastal Information (/protecting-homes/atlantic-ocean-coastal-information)

Rebuilding After a Coastal Storm (/rebuilding-after-coastal-storm)

Resources for Home Builders, Developers, and Construction Professionals (/resources-home-builders-

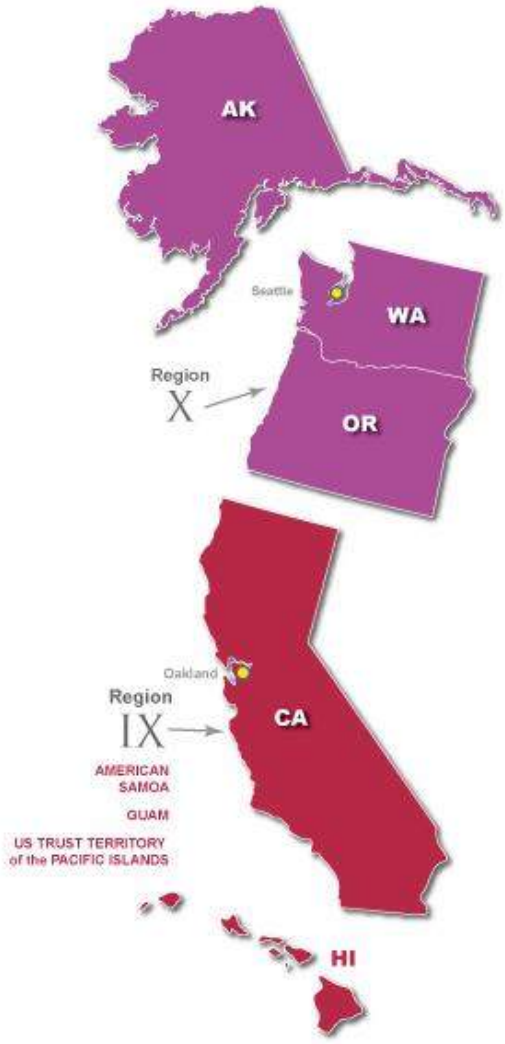

developers-and-construction-professionals)

Programmatic Environmental Impact Statement (/programmatic-environmental-impact-statement)

Public Survey Findings on Flood Risk (/public-survey-findings-flood-risk)

Coastal Resources for Community Officials (/coastal-resources-community-officials)

Coastal Partner Pages (/coastal-partner-pages)

- Coastal Resources for Home Builders, Developers & Construction Professionals (/coastal-resources-home-builders-developers-construction-professionals)

Coastal Resources for Cooperating Technical Partners, Engineers, Surveyors, & Contractors (/coastal-resources-cooperating-technical-partners-engineers-surveyors-contractors)

Pacific Ocean Coastal Information (/pacific-ocean-coastal-information)

Bordering five U.S. States (Alaska, California, Hawaii, Oregon, and Washington), the Pacific coast's tidal shoreline stretches for approximately 40,298 miles (https://shoreline.noaa.gov/_pdf/Coastline_of_the_US_1975.pdf) through various environments. For the past decade, FEMA has been updating Flood Insurance Studies and Flood Insurance Rate Maps (FIRM (/flood-insurance-rate-map-firm)s) (/national-flood-insurance-program-2/flood-insurance-rate-map-firm) for the entire populated coastline of the country to provide improved flood hazard information to coastal communities.

In accordance with FEMA's Guidelines and Standards for Coastal Flood Hazard Analysis and Mapping (/guidelines-and-standards-flood-risk-analysis-and-mapping), FEMA is performing detailed engineering analysis and mapping for coastal communities along the Pacific Ocean coast of the country. See the Coastal Flood Hazard Analysis and Mapping Guidance (/coastal-flood-hazard-analysis-and-mapping) page for information on coastal study guidance resources.

The coastal Risk Mapping, Assessment, and Planning (Risk MAP (/risk-mapping-assessment-and-planning-risk-map)) study aims to foster collaboration between FEMA, other Federal agencies, States, and Tribal and coastal communities while increasing the understanding of local flood hazards, encouraging mitigation efforts, and improving the communities' resilience to flood damage (life, property and business). Many communities along the Pacific seaboard have already received updated flood maps in the form of preliminary or effective FIRMs.

On the pacific coast, two FEMA Regions – Region IX and Region X – manage these projects and work with other Federal agencies, States, and Tribal and local community officials to prepare for, protect against, respond to and mitigate hazards.

Coastal Resources for Real Estate, Insurance & Lending Industry Professionals (/coastal-resources-real-estate-insurance-lending-industry-professionals)

National Oceanic & Atmospheric Administration – Coastal Partner Page (/national-oceanic-atmospheric-administration-coastal-partner-page)

U.S. Army Corps of Engineers - Coastal Partner (/us-army-corps-engineers-coastal-partner)

U.S. Geological Survey – Coastal Partner Page (/us-geological-survey-coastal-partner-page)

Coastal Barrier Resources Act (/us-fish-wildlife-service-coastal-barrier-resources-act-coastal-partner-page)

To obtain information on the status of flood studies in specific pacific coast areas, please visit FEMA's Regional Coastal Analysis and Mapping Pacific coast websites:

- FEMA Region IX Coastal Study (http://www.r9map.org/Pages/CCAMP-Open-Pacific-Coast-Study.aspx) (California, Hawaii)
- FEMA Region X Coastal Study (https://www.starr-team.com/starr/RegionalWorkspaces/RegionX/Pages/default.aspx) (Alaska, Oregon, Washington)

For general information about the FEMA Regional offices responsible for managing the pacific coast flood studies, please visit the following websites:

- FEMA Region IX (/fema-region-ix-arizona-california-hawaii-nevada-pacific-islands) (California, Hawaii)
- FEMA Region X (/region-x-ak-id-or-wa) (Alaska, Oregon, Washington)

Expand All Sections

For More Information

Related Links

Last Updated: 06/01/2018 - 11:08

Share This Page.

liaison-program) Privacy Policy (/privacy-policy) Accessibility (/accessibility) FOIA (/foia) No Fear Act Data (/no-fear-act-data) Office of the Inspector General (https://www.oig.dhs.gov/) Strategic Plan (/strategic-plan) Whitehouse.gov (https://www.whitehouse.gov/) DHS.gov (https://www.dhs.gov/) Ready.gov (https://www.ready.gov/) USA.gov (https://www.usa.gov/) DisasterAssistance.gov (https://www.disasterassistance.gov/)



(https://www.oig.dhs.gov/hotline)

Official website of the Department of Homeland Security

Attachment D

Flood Insurance & Flood Plain Management

Documents included:

- Solicitation Letter to Chris Melville, City Manager, City of West Wendover; Dated January 19, 2023.
- Signed Response from Chris Melville, City Manager, City of West Wendover; Dated January 23, 2023.
- FEMA FIRM Panel 6402E; Dated: September 4, 2013.

January 19, 2023

Chris, Melville
Flood Plain Manager
P.O. Box 2825
West Wendover, Nevada 89883

Transmitted Electronically

Attention: Mr. Melville,

Re: Environmental Review – City of West Wendover – Fire Station #13: Floodplain Management

The City of West Wendover is applying for funds through the Nevada Community Development Block Grant Program (CDBG), and the United States Department of Agriculture – Rural Development, to undertake the following project: City of West Wendover – Fire Station #13. Enclosed is a description of the proposed action, project drawings and maps and a form for your review of the project.

Thank you for your assistance on this Environmental Review. Please do not hesitate to contact me if you need any information on the proposed action. My contact information is found at the bottom of the review form. Please feel free to e-mail your response to: shay.stark@aquaeng.com.

Sincerely,

Shay Stark
Project Manager

Enclosures: Project Description
Project Drawings and Maps
Environmental Review Form

ENVIRONMENTAL REVIEW: FLOODPLAIN MANAGEMENT

Grantee: City of West Wendover Project Name: Fire Station #13

Pursuant to Department of Housing and Urban Development requirements for CDBG projects, the grant recipient assumes the responsibility for environmental review, decision making and actions required by local, state and federal environmental laws or authorities. In order to complete the environmental review requirements, we are requesting your review of the project with respect to the threshold for Floodplain management. The pertinent HUD standards for Floodplain Management include the following criteria, standards, policies and/or regulations:

1. Executive Order 11988, Floodplain Management, May 24, 1977 (42 FR 26951 et seq.); particularly Section 2(a).

Please check the line below which applies and add any applicable comments in the space provided. Please feel free to attach any additional comments.

___ A. The project does not involve property acquisition, management, construction or improvement within a 100 year floodplain (Zones A or V) identified by FEMA maps, or

___ A.1 Does not involve a "critical action" (e.g., a fire station, emergency facility, facility for mobility impaired persons, elderly housing project, etc.) within a 500 year floodplain (Zone B). If these maps have not been published, the same finding is necessary and is to be based on data from the City/County engineer or State/ local Flood Control Agency;

___ B. The environmental threshold for the Floodplain Management Executive Order is exceeded. Grant recipient must initiate and complete the U.S. water Resources Council 8-step Decision making Process for Floodplain Management.

Comments:

Signature, Title Date

Please address reply to:

Shay Stark
AQUA Engineering
533 West 2600 South, Suite 275
Bountiful Utah 84010

Phone: 801-299-1327 ext. 3731
Email: shay.stark@aquaeng.com

ENVIRONMENTAL REVIEW: FLOODPLAIN MANAGEMENT

Grantee: City of West Wendover Project Name: Fire Station #13

Pursuant to Department of Housing and Urban Development requirements for CDBG projects, the grant recipient assumes the responsibility for environmental review, decision making and actions required by local, state and federal environmental laws or authorities. In order to complete the environmental review requirements, we are requesting your review of the project with respect to the threshold for Floodplain management. The pertinent HUD standards for Floodplain Management include the following criteria, standards, policies and/or regulations:

1. Executive Order 11988, Floodplain Management, May 24, 1977 (42 FR 26951 et seq.); particularly Section 2(a).

Please check the line below which applies and add any applicable comments in the space provided. Please feel free to attach any additional comments.

X A. The project does not involve property acquisition, management, construction or improvement within a 100 year floodplain (Zones A or V) identified by FEMA maps, or

___ A.1 Does not involve a "critical action" (e.g., a fire station, emergency facility, facility for mobility impaired persons, elderly housing project, etc.) within a 500 year floodplain (Zone B). If these maps have not been published, the same finding is necessary and is to be based on data from the City/County engineer or State/ local Flood Control Agency;

___ B. The environmental threshold for the Floodplain Management Executive Order is exceeded. Grant recipient must initiate and complete the U.S. water Resources Council 8-step Decision making Process for Floodplain Management.

Comments:

See map attached.

[signature], City Manager
Signature, Title

Date 1-23-2023

Please address reply to:

Shay Stark
AQUA Engineering
533 West 2600 South, Suite 275
Bountiful Utah 84010

Phone: 801-299-1327 ext. 3731
Email: shay.stark@aquaeng.com



PIN

Approximate location based on user input and does not represent an authoritative property location

ELS

Selected FloodMap Boundary

Digital Data Available

No Digital Data Available

Unmapped

NO SCREEN Area of Minimal Flood Hazard Zone X

Effective LOMRs

Area of Undetermined Flood Hazard Zone D

Otherwise Protected Area

EAS Coastal Barrier Resource System Area

SPECIAL FLOOD HAZARD AREAS

Without Base Flood Elevation (BFE) Zone A, V, A99

With BFE or Depth

Regulatory Floodway Zone AE, AO, AH, VE, AR

OTHER AREAS OF FLOOD HAZARD

0.2% Annual Chance Flood Hazard, Areas of 1% annual chance flood with average depth less than one foot or with drainage areas of less than one square mile Zone X

Future Conditions 1% Annual Chance Flood Hazard Zone X

Area with Reduced Flood Risk due to Levee. See Notes. Zone X

Area with Flood Risk due to Levee Zone D

OTHER FEATURES

Cross Sections with 1

Water Surface Elevati

Coastal Transect

Base Flood Elevation

Limit of Study

Jurisdiction Boundary

Coastal Transect Bas

Profile Baseline

Hydrographic Feature

GENERAL STRUCTURES

Channel, Culvert, or S

Levee, Dike, or Flood

Attachment E

Air Quality

Documents included:

- Solicitation Letter to Patricia Bobo, Planning and Modeling Branch, Bureau of Air Quality Planning, Nevada Division of Environmental Protection; Dated: January 19, 2023.
- Signed Response from Andrew Tucker, Supervisor Planning and Data Management Branch, Nevada Division of Environmental Protection; Dated: January 23, 2023.

January 19, 2023

Patricia Bobo, Planning
Planning and Modeling Branch
Bureau of Air Quality Planning
901 S. Stewart St. #4001
Carson City, Nevada 89701-5249

Transmitted Electronically

Attention: Ms. Bobo,

Re: Environmental Review – City of West Wendover – Fire Station #13: Air Quality

The City of West Wendover is applying for funds through the Nevada Community Development Block Grant Program (CDBG), and the United States Department of Agriculture – Rural Development, to undertake the following project: City of West Wendover – Fire Station #13. Enclosed is a description of the proposed action, project drawings and maps and a form for your review of the project.

Thank you for your assistance on this Environmental Review. Please do not hesitate to contact me if you need any information on the proposed action. My contact information is found at the bottom of the review form. Please feel free to e-mail your response to: shay.stark@aquaeng.com.

Sincerely,

Shay Stark
Project Manager

Enclosures: Project Description
Project Drawings and Maps
Environmental Review Form

ENVIRONMENTAL REVIEW: AIR QUALITY ACT

Grantee: City of West Wendover Project Name: Fire Station #13

Pursuant to Department of Housing and Urban Development requirements for CDBG projects, the grant recipient assumes the responsibility for environmental review, decision making and actions required by local, state and federal environmental laws or authorities. In order to complete the environmental review requirements, we are requesting your review of the project with respect to the threshold for Air Quality. The pertinent HUD standards for Air Quality include the following criteria, standards, policies and/or regulations:

1. The Clean Air Act (42 U.S.C. 7401 et seq.) as amended; particularly Section 176 (c) and (d) (42 U.S.C. 7506 (c) and (d)).

Please check either line A or B below and add any applicable comments in the space provided. Please feel free to attach any additional comments.

____ A. The project conforms with the EPA-approved State Implementation Plan (SIP), per contact with the State Air Quality Management District or Board.

____ B. The environmental threshold for Air Quality is exceeded. The project is not in conformance with the Clean Air Act. Negotiate suitable mitigation measures with the Air Quality Management District or Board.

Comments:

_____

Signature/Title Date

Please address reply to:

Shay Stark
AQUA Engineering
533 West 2600 South, Suite 275
Bountiful Utah 84010

Phone: 801-299-1327 ext. 3731
Email: shay.stark@aquaeng.com

NEVADA DIVISION OF
ENVIRONMENTAL
PROTECTION

STATE OF NEVADA
Department of Conservation & Natural Resources
Joe Lombardo, *Governor*
James A. Settelmeyer, *Director*
Greg Lovato, *Administrator*

January 23, 2023

Shay Stark
AQUA Engineering
533 West 2600 South, Suite 275
Bountiful, UT 84010

RE: Environmental Review: Fire Station #13 Project, West Wendover, Nevada

Dear Mr. Stark:

Enclosed you will find the signed environmental review form for the Fire Station #13 Project proposed by the City of West Wendover in Elko County, NV. The Nevada Division of Environmental Protection, Bureau of Air Quality Planning (BAQP) has reviewed this project for conformance with federal air quality standards, and it will conform to Nevada's Applicable State Implementation Plan. Please note the following requirements that must be complied with during the planning and implementation phases of this project:

1. It is our understanding that this project is to construct a new fire station that will also include shared parking and utilities in West Wendover, Nevada. Pursuant to NAC 445B.22037, if during the course of a project an area in excess of five (5) acres is disturbed, a surface area disturbance permit is required from the Bureau of Air Pollution Control (BAPC).

2. Regardless of the size of the disturbed area, fugitive dust emitted from the project must be controlled at all times through the use of best practical methods. These methods can include, but are not limited to, paving, chemical stabilization, watering, phased construction, and revegetation. For assistance with controlling fugitive dust, please contact the BAPC Compliance Supervisor, at (775) 687-9349.

If you have any questions on this review you may call me at (775) 687-9499, or e-mail at atucker@ndep.nv.gov.

Sincerely,

Andrew Tucker, Supervisor
Planning & Data Management Branch

ENVIRONMENTAL REVIEW: AIR QUALITY ACT

Grantee: City of West Wendover Project Name: Fire Station #13 Project

Pursuant to U.S Department of Housing and Urban Development, U.S. Department of Commerce, Economic Development Administration or other federal department or agency requirements, as applicable, the grant recipient assumes the responsibility for environmental review, decision making and actions required by local, state, and federal environmental laws or authorities. In order to complete the environmental review requirements, we are requesting the Nevada Division of Environmental Protection's (NDEP) review of the project with respect to the threshold for Air Quality. The pertinent standards for Air Quality include the following criteria, standards, policies and/or regulations:

1. The Clean Air Act (42 U.S.C. 7401 et seq.) as amended; particularly Section 176 (c) and (d) (42 U.S.C. 7506 (c) and (d)).

Please check either line A or B below and add any applicable comments in the space provided. Please feel free to attach any additional comments.

X A. The project conforms to the EPA-approved State Implementation Plan (SIP), per contract with the State Air Quality Management District or Board.

____ B. The environmental threshold for Air Quality is exceeded. The project is not in conformance with the Clean Air Act. Negotiate suitable mitigation measures with the Air Quality Management District or Board.

NDEP Comments:

This project is not expected to disturb an area in excess of five (5) acres at one time, therefore, a surface area disturbance permit is not required.

In the event a surface area disturbance permit is required, contact a BAPC Supervisor, at (775) 687-9349.

In accordance with NAC 445B.22037, fugitive dust must be controlled at all times during the implementation of this project.

Andrew Zinn / Supervisor — 1/23/2022

Signature/Title — Date

Nevada Division of Environmental Protection

Rev. 1/23

Attachment F

Toxic Chemicals and Radioactive Materials

Documents included:

- Solicitation Letter to Jeff Knudtson, Fire Chief, City of West Wendover; Dated: January 19, 2023.
- Signed Response from Jeff Knudtson, Fire Chief, City of West Wendover; Dated January 20, 2023.

January 19, 2023

Jeff Knudtson
Fire Chief
P.O. Box 2825
West Wendover, Nevada 89883

Transmitted Electronically

Attention: Mr. Knudtson,

Re: Environmental Review – City of West Wendover – Fire Station #13: Toxic Chemicals and Radioactive Materials

The City of West Wendover is applying for funds through the Nevada Community Development Block Grant Program (CDBG), and the United States Department of Agriculture – Rural Development, to undertake the following project: City of West Wendover – Fire Station #13. Enclosed is a description of the proposed action, project drawings and maps and a form for your review of the project.

Thank you for your assistance on this Environmental Review. Please do not hesitate to contact me if you need any information on the proposed action. My contact information is found at the bottom of the review form. Please feel free to e-mail your response to: shay.stark@aquaeng.com.

Sincerely,

Shay Stark
Project Manager

Enclosures: Project Description
Project Drawings and Maps
Environmental Review Form

ENVIRONMENTAL REVIEW: HUD STANDARDS FOR TOXIC CHEMICALS AND RADIOACTIVE MATERIALS

Grantee: City of West Wendover Project Name: Fire Station #13

Pursuant to Department of Housing and Urban Development requirements for CDBG projects, the grant recipient assumes the responsibility for environmental review, decision making and actions required by local, state and federal environmental laws or authorities. In order to complete the environmental review requirements, we are requesting your review of the project with respect to the threshold for Toxic Chemicals and Radioactive Materials. The pertinent HUD standards for these environmental considerations include the following criteria, standards, policies and/or regulations:

1. HUD notice 79-33, September 10, 1979, Policy Guidance to address problems posed by Toxic Chemicals and Radioactive Materials.

Please check either line A or B below and add any applicable comments in the space provided. Please feel free to attach any additional comments.

____ A. The project does not involve new development for habitation; OR the project involves new development for habitation, but is not located within one mile of an NPL ("Superfund") site, within 2,000 feet of a CERCLIS site, nor is adjacent to any other known or suspected sites contaminated with toxic chemicals or radioactive materials, unless a federal, state or local authoritative source determines it does not pose a health hazard.

____ B. The project exceeds the above standards in □A□. Grantees are advised not to use funds for activities supporting new development for habitation when a project site is affected by toxic chemicals or radioactive materials. Documentation includes contact with appropriate federal, state, or local oversight agencies. The grant recipient must establish Acceptable Separation Distance (ASD) or other mitigation measures.

Comments:

_____

Signature/Title Date

Please address reply to:
Shay Stark
AQUA Engineering
533 West 2600 South, Suite 275
Bountiful Utah 84010

Phone: 801-299-1327 ext. 3731
Email: shay.stark@aquaeng.com

AQUA ENGINEERING

January 19, 2023

Jeff Knudtson
Fire Chief
P.O. Box 2825
West Wendover, Nevada 89883

Transmitted Electronically

Attention: Mr. Knudtson,

Re: Environmental Review – City of West Wendover – Fire Station #13: Toxic Chemicals and Radioactive Materials

The City of West Wendover is applying for funds through the Nevada Community Development Block Grant Program (CDBG), and the United States Department of Agriculture – Rural Development, to undertake the following project: City of West Wendover – Fire Station #13. Enclosed is a description of the proposed action, project drawings and maps and a form for your review of the project.

Thank you for your assistance on this Environmental Review. Please do not hesitate to contact me if you need any information on the proposed action. My contact information is found at the bottom of the review form. Please feel free to e-mail your response to: shay.stark@aquaeng.com.

Sincerely,

Shay Stark
Project Manager

Enclosures: Project Description
Project Drawings and Maps
Environmental Review Form

ENVIRONMENTAL REVIEW: HUD STANDARDS FOR TOXIC CHEMICALS AND RADIOACTIVE MATERIALS

Grantee: City of West Wendover Project Name: Fire Station #13

Pursuant to Department of Housing and Urban Development requirements for CDBG projects, the grant recipient assumes the responsibility for environmental review, decision making and actions required by local, state and federal environmental laws or authorities. In order to complete the environmental review requirements, we are requesting your review of the project with respect to the threshold for Toxic Chemicals and Radioactive Materials. The pertinent HUD standards for these environmental considerations include the following criteria, standards, policies and/or regulations:

1. HUD notice 79-33, September 10, 1979, Policy Guidance to address problems posed by Toxic Chemicals and Radioactive Materials.

Please check either line A or B below and add any applicable comments in the space provided. Please feel free to attach any additional comments.

X A. The project does not involve new development for habitation; OR the project involves new development for habitation, but is not located within one mile of an NPL ("Superfund") site, within 2,000 feet of a CERCLIS site, nor is adjacent to any other known or suspected sites contaminated with toxic chemicals or radioactive materials, unless a federal, state or local authoritative source determines it does not pose a health hazard.

___ B. The project exceeds the above standards in □A□. Grantees are advised not to use funds for activities supporting new development for habitation when a project site is affected by toxic chemicals or radioactive materials. Documentation includes contact with appropriate federal, state, or local oversight agencies. The grant recipient must establish Acceptable Separation Distance (ASD) or other mitigation measures.

Comments:

Signature/Title Fire Chief Date 01/20/2023

Please address reply to:
Shay Stark
AQUA Engineering
533 West 2600 South, Suite 275
Bountiful Utah 84010

Phone: 801-299-1327 ext. 3731
Email: shay.stark@aquaeng.com

Attachment G

Endangered Species

Documents included:

- Solicitation Letter to Eric Miskow Biological Data Manager, Nevad Natural Heritage Program: Dated February 8, 2023.
- Signed Response: Solicitation Letter to Eric Miskow Biological Data Manager, Nevad Natural Heritage Program: Dated February 8, 2023.
- Solicitation Letter Jinna Larkin, GIS/Data Coordinator, Nevada Department of Wildlife Dated: February 10, 2023.
- Signed Response; Jinna Larkin, GIS/Data Coordinator, Nevada Department of Wildlife Dated: February 13, 2023.

February 8, 2023

Eric Miskow,
Biological Data Manager
Nevada Natural Heritage Program
901 S Stewart St Suite 5004
Carson City, NV 89701

Transmitted Electronically

Attention: Mr. Miskow,

Re: Environmental Review – City of West Wendover – Fire Station #13: Endangered Species Act

The City of West Wendover is applying for funds through the Nevada Community Development Block Grant Program (CDBG), and the United States Department of Agriculture – Rural Development, to undertake the following project: City of West Wendover – Fire Station #13. Enclosed is a description of the proposed action, project drawings and maps, data request form, shape file of project location, and a form for your review of the project.

Thank you for your assistance on this Environmental Review. Please do not hesitate to contact me if you need any information on the proposed action. My contact information is found at the bottom of the review form. Please feel free to e-mail your response to: shay.stark@aquaeng.com.

Sincerely,

Shay Stark
Project Manager

Enclosures: Project Description
Project Drawings and Maps
Data Request Form
Project Location Shape File
Environmental Review Form

ENVIRONMENTAL REVIEW: ENDANGERED SPECIES ACT

Grantee: City of West Wendover Project Name: Fire Station #13

Pursuant to the U. S. Department of Housing and Urban Development requirements for CDBG projects and in reference to the "interagency consultation" regulations at 50 CFR Part 402 Units of General Local governments (UGLG) are the "responsible entities" when acting in accordance with HUD's regulation (24 CFR 58.5) and statues; which state the responsible entity is the Federal Official making the request for consultation at the project level.

1. The Endangered Species Act of 1973 (16 U.S.C.-1531 et seq.); as amended; particularly Section 7 (16 U.S.C.-1536).

Please check either line A or B below and add any applicable comments in the space provided. Please feel free to attach any additional comments.

____ A. The project will not affect any federally listed or proposed Threatened and Endangered Species (including plants, animals, fish, or invertebrates), nor any designated critical habitat.

____ B. The project exceeds the environmental threshold for Endangered Species. Grant recipient must initiate and complete consultation with the U.S. Fish and Wildlife Service (or other appropriate agencies,) in accordance with procedural regulations contained in 50 CFR Part 402.

Comments:

_____

Signature/Title Date

Please address reply to:

Shay Stark
AQUA Engineering
533 West 2600 South, Suite 275
Bountiful Utah 84010

Phone: 801-299-1327 ext. 3731
Email: shay.stark@aquaeng.com

NEVADA
DIVISION OF
NATURAL HERITAGE

STATE OF NEVADA
Department of Conservation & Natural Resources
Joe Lombardo, *Governor*
James A. Settelmeyer, *Director*
Kristin Szabo, *Administrator*

08 February 2023

Shay Stark
Aqua Engineering
533 West 2600 South, Suite 275
Bountiful, UT 84010

RE: Data request received 07 February 2023

Dear Mr. Stark

We are pleased to provide the information you requested on endangered, threatened, candidate, and/or at-risk plant and animal taxa recorded on or near the City of West Wendover Fire Station # 13 project area in Elko County. We searched our database and maps around the shapefile provided including a two-kilometer radius around:

Township 33N Range 70E Section 09

There are no at-risk taxa recorded within the given area. However, habitat may be available for, the silver-haired bat, *Lasionycteris noctivagans*, a Nevada Bureau of Land Management (BLM) Sensitive Species, and the Great Basin fishhook cactus, *Sclerocactus pubispinus*, a Nevada BLM Sensitive Species as well as a State Protected Cacti under NAC 503. The Nevada Department of Wildlife (NDOW) manages, protects, and restores Nevada's wildlife resources and associated habitat. Please contact Jinna Larkin, NDOW GIS Coordinator (775) 688-1580 to obtain further information regarding wildlife resources within and near your area of interest. Removal or destruction of state protected flora species (NAC 527.010) requires a special permit from Nevada Division of Forestry (NRS 527.270).

Please note that our data are dependent on the research and observations of many individuals and organizations, and in most cases are not the result of comprehensive or site-specific field surveys. Natural Heritage reports should never be regarded as final statements on the taxa or areas being considered, nor should they be substituted for on-site surveys required for environmental assessments.

Thank you for checking with our program. Please contact us for additional information or further assistance.

Sincerely,

Eric S. Miskow
Aquatic Biologist/Data Manager

February 10, 2023

Jinna Larkin,
GIS/Data Coordinator
Nevada Department of Wildlife
6980 Sierra Center Parkway, Suite 120
Reno NV 89511

Transmitted Electronically

Attention: Ms. Larkin,

Re: Environmental Review – City of West Wendover – Fire Station #13: Endangered Species Act

The City of West Wendover is applying for funds through the Nevada Community Development Block Grant Program (CDBG), and the United States Department of Agriculture – Rural Development, to undertake the following project: City of West Wendover – Fire Station #13. Enclosed is a description of the proposed action, project drawings and maps, shape file of project location, data request form, and a form for your review of the project.

Thank you for your assistance on this Environmental Review. Please do not hesitate to contact me if you need any information on the proposed action. My contact information is found at the bottom of the review form. Please feel free to e-mail your response to: shay.stark@aquaeng.com.

Sincerely,

Shay Stark
Project Manager

Enclosures:
- Project Description
- Project Drawings and Maps
- Data Request Form
- Project Location Shape File
- Environmental Review Form

ENVIRONMENTAL REVIEW: ENDANGERED SPECIES ACT

Grantee: City of West Wendover Project Name: Fire Station #13

Pursuant to the U. S. Department of Housing and Urban Development requirements for CDBG projects and in reference to the "interagency consultation" regulations at 50 CFR Part 402 Units of General Local governments (UGLG) are the "responsible entities" when acting in accordance with HUD's regulation (24 CFR 58.5) and statues; which state the responsible entity is the Federal Official making the request for consultation at the project level.

1. The Endangered Species Act of 1973 (16 U.S.C.-1531 et seq.); as amended; particularly Section 7 (16 U.S.C.-1536).

Please check either line A or B below and add any applicable comments in the space provided. Please feel free to attach any additional comments.

____ A. The project will not affect any federally listed or proposed Threatened and Endangered Species (including plants, animals, fish, or invertebrates), nor any designated critical habitat.

____ B. The project exceeds the environmental threshold for Endangered Species. Grant recipient must initiate and complete consultation with the U.S. Fish and Wildlife Service (or other appropriate agencies,) in accordance with procedural regulations contained in 50 CFR Part 402.

Comments:

_____

Signature/Title Date

Please address reply to:

Shay Stark
AQUA Engineering
533 West 2600 South, Suite 275
Bountiful Utah 84010

Phone: 801-299-1327 ext. 3731
Email: shay.stark@aquaeng.com

JOE LOMBARDO
Governor

STATE OF NEVADA
DEPARTMENT OF WILDLIFE
6980 Sierra Center Parkway, Suite 120
Reno, Nevada 89511
Phone (775) 688-1500 • Fax (775) 688-1595

ALAN JENNE
Director
JORDAN GOSHERT
Deputy Director
VACANT
Deputy Director

Shay Stark
Contract City Planner
AQUA Engineering
533 W. 2600 S. STE. 275
Bountiful, Utah 84010

February 13, 2023

Re: WestWendoverFireStation13

Dear Shay Stark:

I am responding to your request for information from the Nevada Department of Wildlife (NDOW) on the known or potential occurrence of wildlife resources in the vicinity of the WestWendoverFireStation13 located in Elko County, Nevada. In order to fulfill your request, a query was performed using the best available data from the NDOW's wildlife occurrences, raptor nest sites and ranges, greater sage-grouse leks and habitat, and big game distributions databases. No warranty is made by the NDOW as to the accuracy, reliability, or completeness of the data for individual use or aggregate use with other data. The absence of data does not imply the absence of species or associated habitat, and additional coordination may be necessary to adequately address species or habitat presence or limits to existing data. These data should be considered **sensitive** and may contain information regarding the location of sensitive wildlife species or resources. All appropriate measures should be taken to ensure that the use of this data is strictly limited to serve the needs of the project described on your GIS Data Request Form. Abuse of this information has the potential to adversely affect the existing ecological status of Nevada's wildlife resources and could be cause for the denial of future data requests.

To adequately provide wildlife resource information in the vicinity of the proposed project the NDOW delineated an area of interest that included a four-mile buffer around the project area provided by you on Friday, February 10, 2023. Wildlife resource data was queried from the NDOW databases based on this area of interest. The results of this analysis are summarized below.

Big Game - Occupied pronghorn antelope distribution exists throughout the entire project area and portions of the four-mile buffer area. Occupied bighorn sheep and elk distributions exist outside of the project area within portions of the four-mile buffer area. No known occupied mule deer distribution exists in the vicinity of the project area. Please refer to the attached maps for details regarding big game distributions relative to the proposed project area.

Greater Sage-Grouse - Greater sage-grouse habitat in the vicinity of the project area has primarily been classified as Other habitat by the Nevada Sagebrush Ecosystem Program (http://sagebrusheco.nv.gov). Please refer to the attached map for details regarding greater sage-grouse habitat relative to the proposed project area. Greater sage-grouse activity in the vicinity of the project area has been documented by two tracking locations generated by at least one radio-marked bird in the vicinity of the project area. There are no known greater sage-grouse lek sites in the vicinity of the project area.

Lahontan Cutthroat Trout - are known to exist in the vicinity of the project area in the Willow Canyon-Bettridge Creek watershed.

Raptors - Various species of raptors, which use diverse habitat types, may reside in the vicinity of the project area. American kestrel, bald eagle, barn owl, burrowing owl, Cooper's hawk, ferruginous hawk, flammulated owl, golden eagle, great horned owl, long-eared owl, merlin, northern goshawk, northern

harrier, northern saw-whet owl, osprey, peregrine falcon, red-tailed hawk, rough-legged hawk, sharp-shinned hawk, short-eared owl, Swainson's hawk, turkey vulture, and western screech owl have distribution ranges that include the project area and four-mile buffer area. Furthermore, prairie falcon and rough-legged hawk have been directly observed in the vicinity of the project area.

Raptor species are protected by State and Federal laws. In addition, bald eagle, burrowing owl, California spotted owl, ferruginous hawk, flammulated owl, golden eagle, northern goshawk, peregrine falcon, prairie falcon, and short-eared owl are NDOW species of special concern and are target species for conservation as outlined by the Nevada Wildlife Action Plan. Per the *Interim Golden Eagle Technical Guidance: Inventory and Monitoring Protocols; and Other Recommendations in Support of Golden Eagle Management and Permit Issuance* (United States Fish and Wildlife Service 2010) we have queried our raptor nest database to include raptor nest sites within ten miles of the proposed project area. There are 15 known or suspected raptor nest sites within ten miles of the project area:

Nest Type	Nest Substrate	Nest Size	Last Visit Date	Last Occupied Species	Last Occupied Date
stick nest			7/1/1979		
stick nest			10/23/1979		
stick nest			10/25/1979		
stick nest			6/10/1992		
stick nest			5/16/2012	red-tailed hawk	5/16/2012
stick nest			5/16/2012		
stick nest			5/16/2012		
stick nest			5/16/2012		
stick nest			5/16/2012		
stick nest			5/16/2012		
stick nest			5/16/2012		
stick nest			5/16/2012		
stick nest			5/16/2012		
stick nest			5/16/2012		
stick nest			5/16/2012		

* Nest Size – If a stick nest, the general size of the nest. For example, ravens and sharp-shinned hawks often build "small" nests, "medium"-sized nests could be larger accipiters or most buteos, "large"-sized nests could be larger buteos (e.g., large ferruginous hawk nests) or most eagle nests, and "extra large" nests are most often very large eagle nests.

Other Wildlife Resources

There are no big game and four small game water developments in the vicinity of the project area. The following species have also been observed in the vicinity of the project area:

Common Name	ESA	State	SWAP SoCP
black-tailed jackrabbit		Unprotected	
common raven		Protected	
coyote		Unprotected	
Sierra Nevada red fox		Furbearer	

ESA: Endangered Species Act Status
State: State of Nevada Special Status
SWAP SoCP: Nevada State Wildlife Action Plan (2012) Species of Conservation Priority

The proposed project area may also be in the vicinity of abandoned mine workings, which often provide habitat for state and federally protected wildlife, especially bat species, many of which are protected under NAC 503.030. To request data regarding known abandoned mine workings in the vicinity of the project area please contact the Nevada Division of Minerals (http://minerals.state.nv.us/).

The above information is based on data stored at our Reno Headquarters Office and does not necessarily incorporate the most up to date wildlife resource information collected in the field. Please contact the Habitat Division Supervising Biologist at our to discuss the current environmental conditions for your project area and the interpretation of our analysis. Furthermore, it should be noted that the information detailed above is preliminary in nature and not necessarily an identification of every wildlife resource concern associated with the proposed project. Consultation with the Supervising Habitat biologist will facilitate the development of appropriate survey protocols and avoidance or mitigation measures that may be required to address potential impacts to wildlife resources.

Caleb McAdoo - Eastern Region Habitat Supervisor (775.777.2306)

Federally listed Threatened and Endangered species are also under the jurisdiction of the United States Fish and Wildlife Service. Please contact them for more information regarding these species.

If you have any question regarding the results or methodology of this analysis, please do not hesitate to contact Jinna Larkin at (755) 688-1580 or via email at jhlarkin@ndow.org.

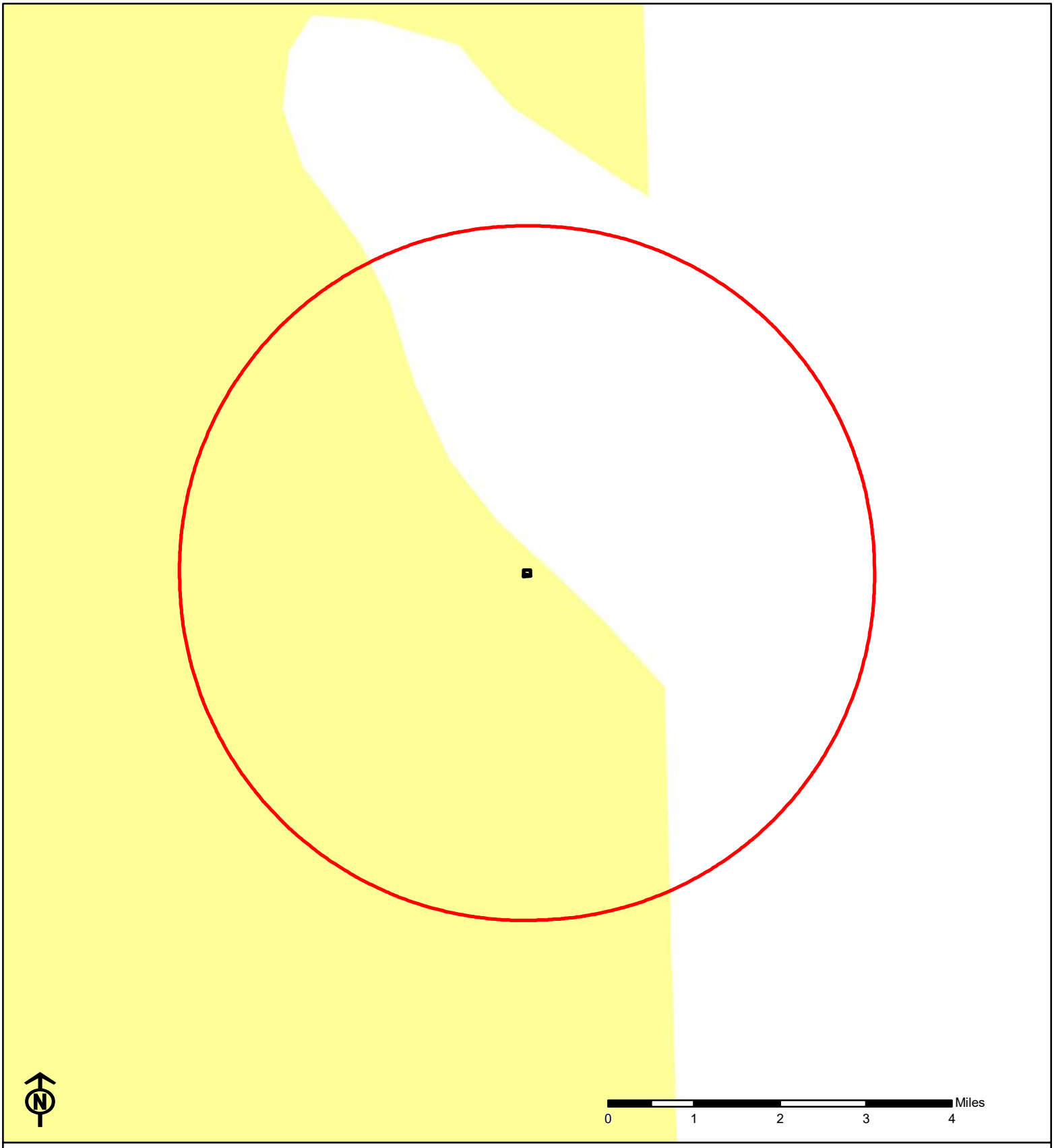

Project Area

Four Mile Buffer Area Boundary

Pronghorn Antelope Distribution

WestWendoverFireStation13
Pronghorn Antelope Distribution

February 13, 2023

Projection: UTM Zone 11 North, NAD83

No warranty is made by the Nevada Department of Wildlife as to the accuracy, reliability, or completeness of the data for individual use or aggregate use with other data.

V:\ActiveProjects\DataRequests\Template\Data Request - Response Template.mxd

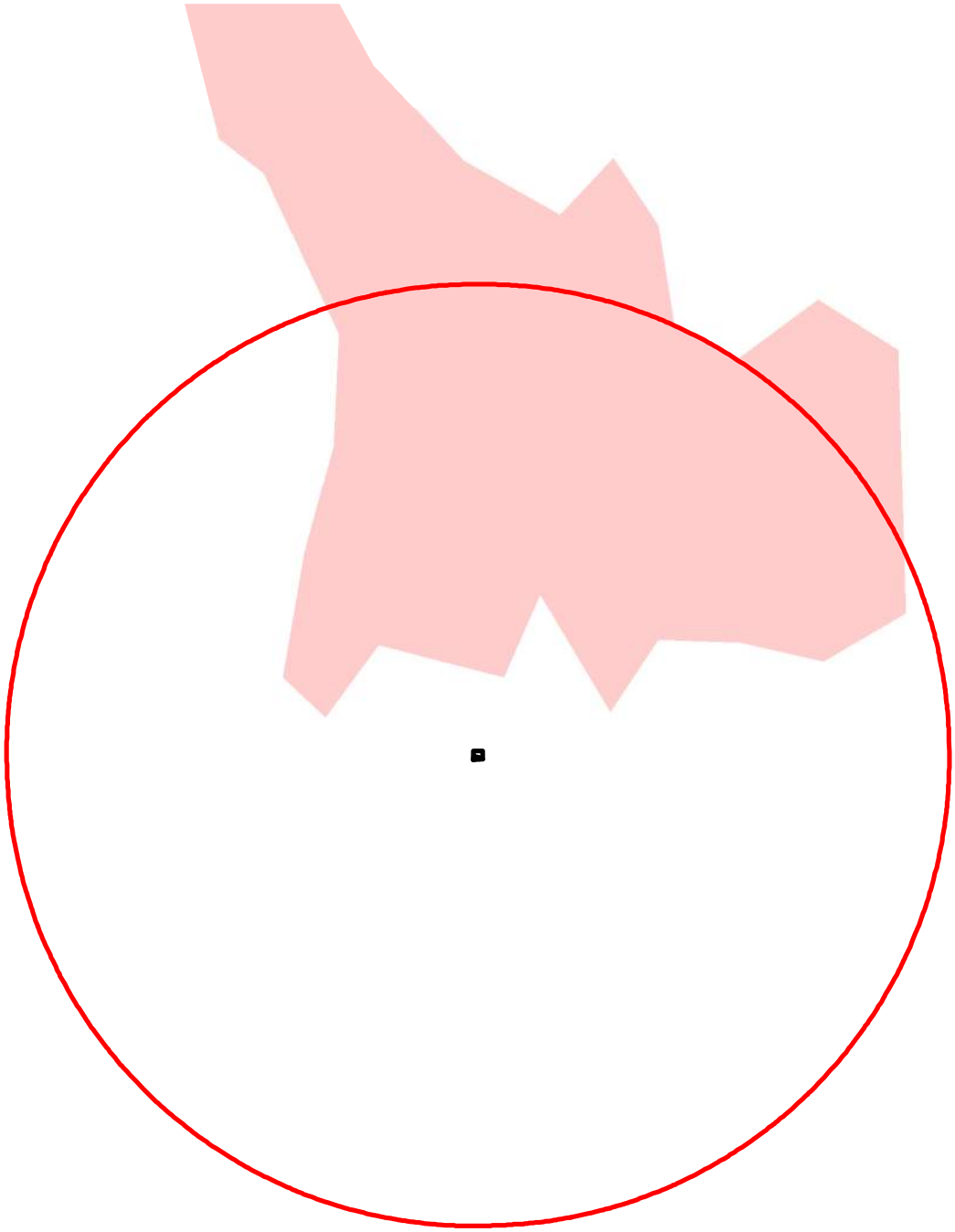

Miles
0 1 2 3 4

Project Area
Four Mile Buffer Area Boundary
Bighorn Sheep Distribution

WestWendoverFireStation13
Bighorn Sheep Distribution

February 13, 2023

Projection: UTM Zone 11 North, NAD83

No warranty is made by the Nevada Department of Wildlife as to the accuracy, reliability, or completeness of the data for individual use or aggregate use with other data.

V:\ActiveProjects\DataRequests\Template\Data Request - Response Template.mxd

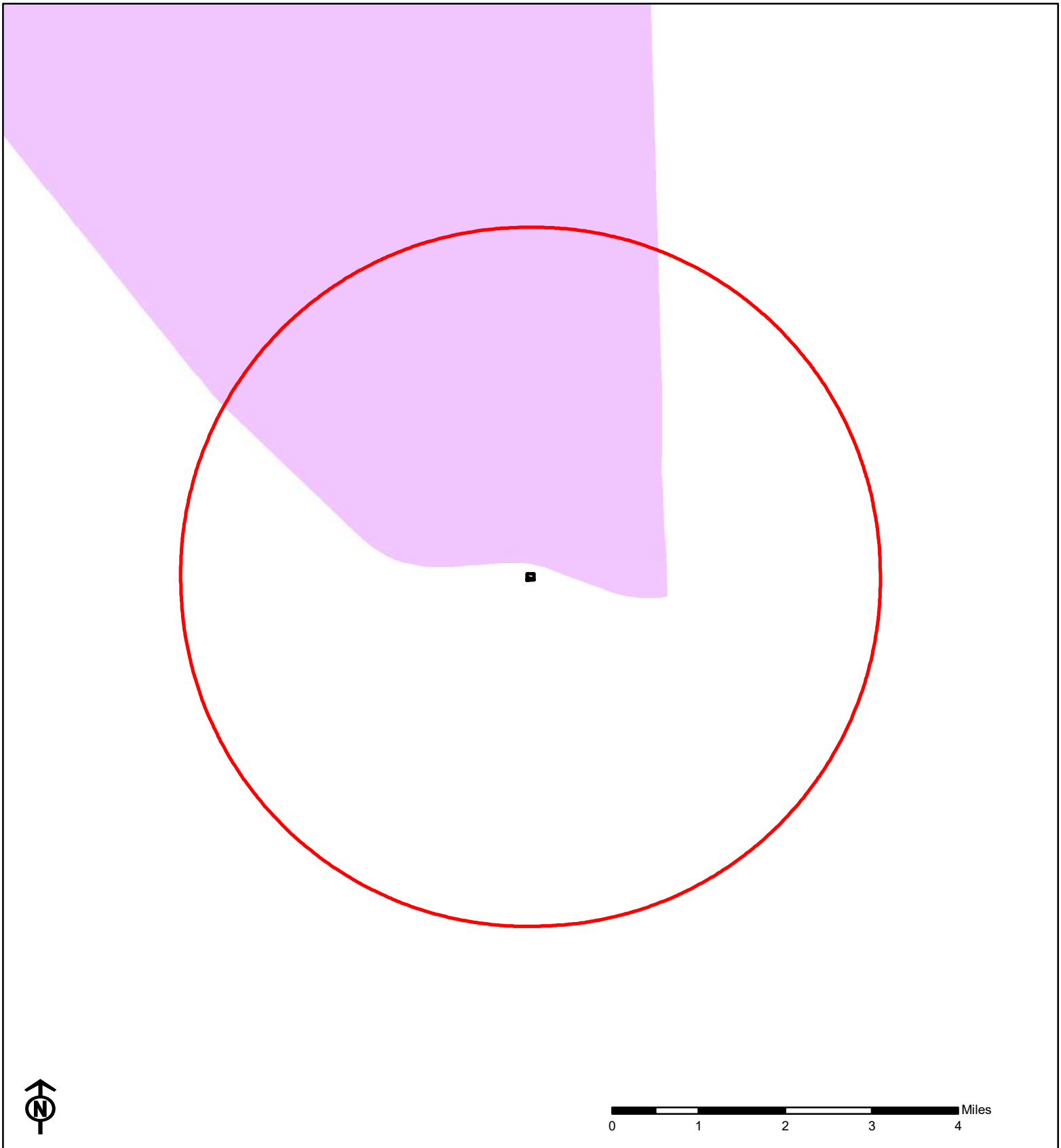

Project Area

Four Mile Buffer Area Boundary

Elk Distribution

WestWendoverFireStation13
Elk Distribution

February 13, 2023

Projection: UTM Zone 11 North, NAD83

No warranty is made by the Nevada Department of Wildlife as to the accuracy, reliability, or completeness of the data for individual use or aggregate use with other data.

V:\ActiveProjects\DataRequests\Template\Data Request - Response Template.mxd

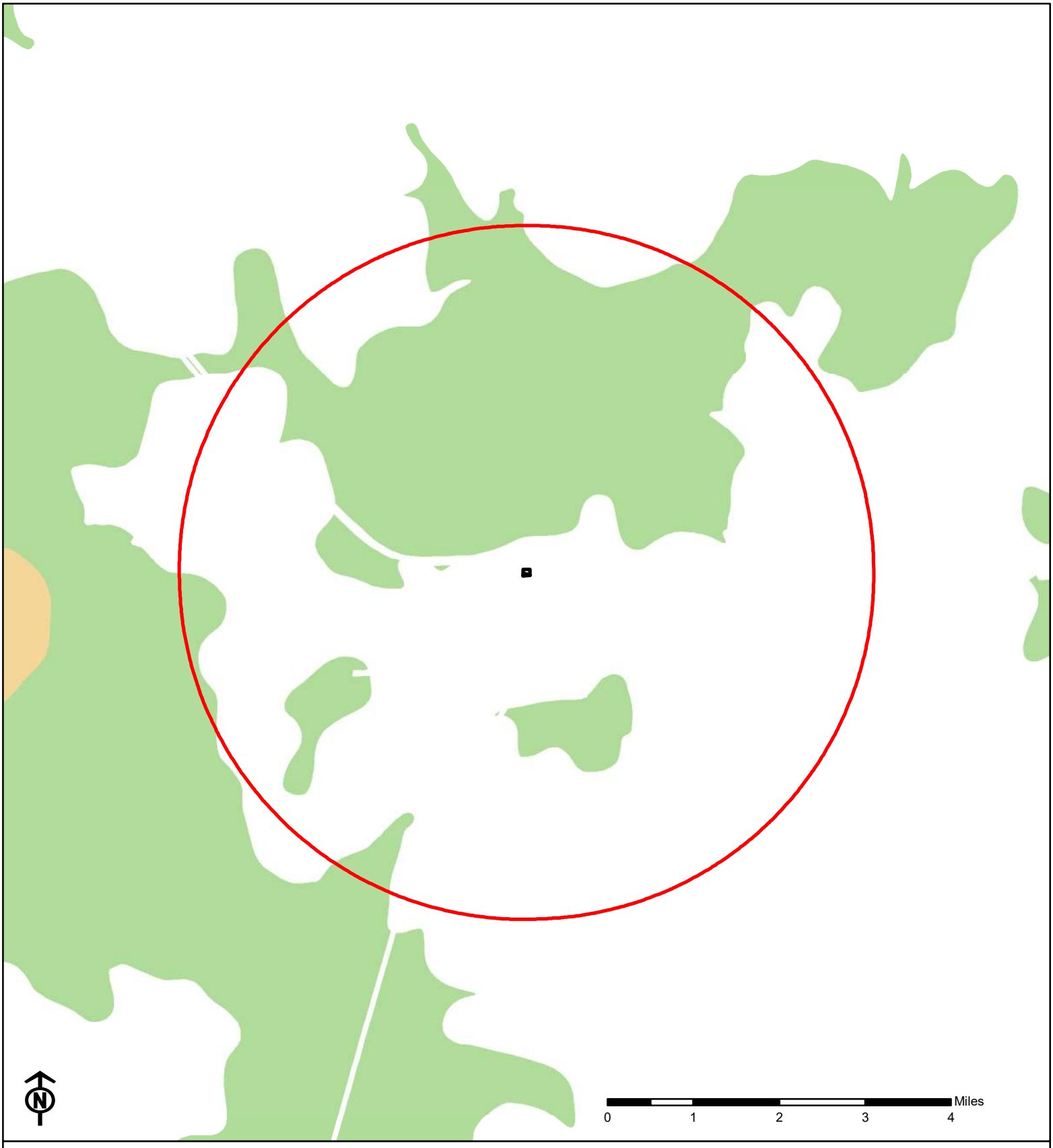

Project Area

Four Mile Buffer Area Boundary

Priority Habitat

General Habitat

Other Habitat

Bi-State Habitat

WestWendoverFireStation13
Greater Sage-Grouse Habitat

February 13, 2023

Projection: UTM Zone 11 North, NAD83

No warranty is made by the Nevada Department of Wildlife as to the accuracy, reliability, or completeness of the data for individual use or aggregate use with other data.

V:\ActiveProjects\DataRequests\Template\Data Request - Response Template.mxd

Attachment H

Explosive or Flammable Operations

Documents included:

- Solicitation Letter to Jeff Knudtson, Fire Chief, City of West Wendover; Dated: January 19, 2023.
- Signed Response from Jeff Knudtson, Fire Chief, City of West Wendover; Dated January 20, 2023.

January 19, 2023

Jeff Knudtson
Fire Chief
P.O. Box 2825
West Wendover, Nevada 89883

Transmitted Electronically

Attention: Mr. Knudtson,

Re: Environmental Review – City of West Wendover – Fire Station #13: Explosive or Flammable Operations

The City of West Wendover is applying for funds through the Nevada Community Development Block Grant Program (CDBG), and the United States Department of Agriculture – Rural Development, to undertake the following project: City of West Wendover – Fire Station #13. Enclosed is a description of the proposed action, project drawings and maps and a form for your review of the project.

Thank you for your assistance on this Environmental Review. Please do not hesitate to contact me if you need any information on the proposed action. My contact information is found at the bottom of the review form. Please feel free to e-mail your response to: shay.stark@aquaeng.com.

Sincerely,



Shay Stark
Project Manager

Enclosures: Project Description
Project Drawings and Maps
Environmental Review Form

ENVIRONMENTAL REVIEW: HUD STANDARDS FOR EXPLOSIVE OR FLAMMABLE OPERATIONS

Grantee: City of West Wendover Project Name: Fire Station #13

Pursuant to Department of Housing and Urban Development requirements for CDBG projects, the grant recipient assumes the responsibility for environmental review, decision making and actions required by local, state and federal environmental laws or authorities. In order to complete the environmental review requirements, we are requesting your review of the project with respect to the threshold for Explosive and Flammable. The pertinent HUD standards for Explosive or Flammable Operations environmental considerations include the following criteria, standards, policies and/or regulations:

1. 24CFR Part 51, Subpart C, Siting of HUD-Assisted Projects Near Hazardous Operations Handling Petroleum Products or Chemicals of an Explosive or Flammable Nature.

Please check either line A or B below and add any applicable comments in the space provided. Please feel free to attach any additional comments.

____ A. The project is located at an Acceptable Separation Distance (ASD) from any above-ground or flammable fuels or chemicals containers according to □Siting of HUD-Assisted projects near Hazardous Facilities OR the project will expose neither people nor buildings to such hazards.

____ B. The project exceeds the standards in □A□ above. The project requires mitigation of the hazard (per 24 CFR 51.205) with construction of a barrier of adequate size and strength to protect the project from the explosive or flammable hazard.

Comments:

_____

Signature/Title Date

Please address reply to:

Shay Stark
AQUA Engineering
533 West 2600 South, Suite 275
Bountiful Utah 84010

Phone: 801-299-1327 ext. 3731
Email: shay.stark@aquaeng.com

AQUA ENGINEERING

January 19, 2023

Jeff Knudtson
Fire Chief
P.O. Box 2825
West Wendover, Nevada 89883

Transmitted Electronically

Attention: Mr. Knudtson,

Re: Environmental Review – City of West Wendover – Fire Station #13: Explosive or Flammable Operations

The City of West Wendover is applying for funds through the Nevada Community Development Block Grant Program (CDBG), and the United States Department of Agriculture – Rural Development, to undertake the following project: City of West Wendover – Fire Station #13. Enclosed is a description of the proposed action, project drawings and maps and a form for your review of the project.

Thank you for your assistance on this Environmental Review. Please do not hesitate to contact me if you need any information on the proposed action. My contact information is found at the bottom of the review form. Please feel free to e-mail your response to: shay.stark@aquaeng.com.

Sincerely,

Shay Stark
Project Manager

Enclosures: Project Description
Project Drawings and Maps
Environmental Review Form

ENVIRONMENTAL REVIEW: HUD STANDARDS FOR EXPLOSIVE OR FLAMMABLE OPERATIONS

Grantee: City of West Wendover Project Name: Fire Station #13

Pursuant to Department of Housing and Urban Development requirements for CDBG projects, the grant recipient assumes the responsibility for environmental review, decision making and actions required by local, state and federal environmental laws or authorities. In order to complete the environmental review requirements, we are requesting your review of the project with respect to the threshold for Explosive and Flammable. The pertinent HUD standards for Explosive or Flammable Operations environmental considerations include the following criteria, standards, policies and/or regulations:

1. 24CFR Part 51, Subpart C, Siting of HUD-Assisted Projects Near Hazardous Operations Handling Petroleum Products or Chemicals of an Explosive or Flammable Nature.

Please check either line A or B below and add any applicable comments in the space provided. Please feel free to attach any additional comments.

X A. The project is located at an Acceptable Separation Distance (ASD) from any above-ground or flammable fuels or chemicals containers according to □Siting of HUD-Assisted projects near Hazardous Facilities OR the project will expose neither people nor buildings to such hazards.

____ B. The project exceeds the standards in □A□ above. The project requires mitigation of the hazard (per 24 CFR 51.205) with construction of a barrier of adequate size and strength to protect the project from the explosive or flammable hazard.

Comments:

Signature/ Title 01/20/2023 Date

Please address reply to:

Shay Stark
AQUA Engineering
533 West 2600 South, Suite 275
Bountiful Utah 84010

Phone: 801-299-1327 ext. 3731
Email: shay.stark@aquaeng.com

Attachment I

Farmland Protection

Documents included:

- Solicitation Letter to Chris Melville, City Manager, City of West Wendover; Dated January 19, 2023.
- Signed Response from Chris Melville, City Manager, City of West Wendover; Dated January 23, 2023.

January 19, 2023

Chris Melville
Community Development Director
P.O. Box 2825
West Wendover, Nevada 89883

Transmitted Electronically

Attention: Mr. Melville,

Re: Environmental Review – City of West Wendover – Fire Station #13: Farmland Protection

The City of West Wendover is applying for funds through the Nevada Community Development Block Grant Program (CDBG), and the United States Department of Agriculture – Rural Development, to undertake the following project: City of West Wendover – Fire Station #13. Enclosed is a description of the proposed action, project drawings and maps and a form for your review of the project.

Thank you for your assistance on this Environmental Review. Please do not hesitate to contact me if you need any information on the proposed action. My contact information is found at the bottom of the review form. Please feel free to e-mail your response to: shay.stark@aquaeng.com.

Sincerely,

Shay Stark
Project Manager

Enclosures: Project Description
Project Drawings and Maps
Environmental Review Form

ENVIRONMENTAL REVIEW: FARMLAND PROTECTION ACT

Grantee: City of West Wendover Project Name: Fire Station #13

Pursuant to Department of Housing and Urban Development requirements for CDBG projects, the grant recipient assumes the responsibility for environmental review, decision making and actions required by local, state and federal environmental laws or authorities. In order to complete the environmental review requirements, we are requesting you review of the project with respect to the threshold for Farmland Protection. The pertinent HUD standards for Farmland Protection include the following criteria, standards, policies and/or regulations:

1. The Farmland Protection Policy Act of 1981 (P.L. 97-98, 7 U.S.C. 4201 and 4202).

Please check either line A or B below and add any applicable comments in the space provided. Please feel free to attach any additional comments.

___ A. The project site does not include prime or unique farmland, OR other farmland of statewide or local importance as identified by the U.S. Department of Agriculture, Soil Conservation Service (SCS); OR project site includes prime farmland but is located in an area committed to urban uses.

___ B. The project exceeds the environmental threshold for farmland protection. Request evaluation of land type from SCS using Form AD 1006, and consider the resultant rating in the project decision, and potential mitigation measures (including measures to protect adverse effect on adjacent farmlands). The grant recipient must consult with the local Soil Conservation Service (SCS) field office to identify minimal protection.

Comments:

_____

Signature, Title Date

Please address reply to:

Shay Stark
AQUA Engineering
533 West 2600 South, Suite 275
Bountiful Utah 84010

Phone: 801-299-1327 ext. 3731
Email: shay.stark@aquaeng.com

ENVIRONMENTAL REVIEW: FARMLAND PROTECTION ACT

Grantee: City of West Wendover Project Name: Fire Station #13

Pursuant to Department of Housing and Urban Development requirements for CDBG projects, the grant recipient assumes the responsibility for environmental review, decision making and actions required by local, state and federal environmental laws or authorities. In order to complete the environmental review requirements, we are requesting you review of the project with respect to the threshold for Farmland Protection. The pertinent HUD standards for Farmland Protection include the following criteria, standards, policies and/or regulations:

1. The Farmland Protection Policy Act of 1981 (P.L. 97-98, 7 U.S.C. 4201 and 4202).

Please check either line A or B below and add any applicable comments in the space provided. Please feel free to attach any additional comments.

X A. The project site does not include prime or unique farmland, OR other farmland of statewide or local importance as identified by the U.S. Department of Agriculture, Soil Conservation Service (SCS); OR project site includes prime farmland but is located in an area committed to urban uses.

___ B. The project exceeds the environmental threshold for farmland protection. Request evaluation of land type from SCS using Form AD 1006, and consider the resultant rating in the project decision, and potential mitigation measures (including measures to protect adverse effect on adjacent farmlands). The grant recipient must consult with the local Soil Conservation Service (SCS) field office to identify minimal protection.

Comments:

City Manager
Signature, Title

1-23-2023
Date

Please address reply to:

Shay Stark
AQUA Engineering
533 West 2600 South, Suite 275
Bountiful Utah 84010

Phone: 801-299-1327 ext. 3731
Email: shay.stark@aquaeng.com

Attachment J

Historic Preservation

Documents included:

- Solicitation Letter to Rebecca Palmer, Historic Preservation Specialist, Nevada State Historic Preservation Office; Dated June 14, 2023 Including:
    - Letter Attachment A - Project Conceptual Drawings and Maps
    - Letter Attachment B – Area of Potential Effect Maps
    - Letter Attachment C – Site Photos and Photo Location Map
- NVCRIS cultural resources documentation e-mail correspondence with Karyn de Dufour Nevada State Historic Preservation Office NVCRIS Manager Department of Conservation and Natural Resources, dated June 19, 2023 – July 13, 2023.
- 2006 Concurrence Letter from Ronald M. James, State Historic Preservation Officer, Dated August 9, 2006
- Memorandum of Agreement – Among the Elko Field Office of the Bureau of Land Management and the Nevada State Historic Preservation Officer, and the City of West Wendover, Nevada – Regarding Resolution of Adverse Effects From Leasing 124.67 Acres of Public Land, Dated August 3, 2006
- United States Department of Interior Bureau of Land Management - Phase 1 Environmental Site Assessment – Wendover Recreation & Public Purposes Lease – Elk County, Nevada – T. 33 N., R. 70 E., M.D.B.&M. Portion of: Section 8 E1/2 SE1/4 SE1/4; Portion of: Section 9 SW1/4 SW1/4; Portion of Section 16 NW1/4 NW1/4 - February 2006
- Victory Highway (US40) - One-mile segment west of West Wendover and south of Interstate 80 – West Wendover Vicinity – Elko County, Nevada HAER NV-41 – Historic American Engineering Record – Pacific West Regional Office – National Park Service – U.S. Department of the Interior – December 2006

June 14, 2023

Rebecca Palmer
State Historic Preservation Officer
Nevada State Historic Preservation Office
901 S. Stewart Street, Suite 5004
Carson City, Nevada 89701-4285
Transmitted Via. Email: rlpalmer@shpo.nv.gov

Attention: Ms. Palmer,

Re: Environmental Review – City of West Wendover – Fire Station #13: Historic Preservation

The City of West Wendover is applying for funds through the U.S. department of Housing and Urban Development (HUID) Community Development Block Grant Program (CDBG) and other HUD programs to undertake the following project: City of West Wendover - Fire Station #13. In an effort to comply with the requirements of the National Historic Preservation Act of 1966 Section 106, the City is reaching out to the Nevada State Historic Preservation Office and providing information supporting the City's determination that the proposed action does include a historic structure with in the Area of Potential Effect but the proposed action will not impact the historic structure. The City is requesting concurrence by the State Historic Preservation Office with this determination. An explanation of how this determination has been derived follows:

Location of Proposed Action: A portion of the W 1/2 of the SW ¼ of the SW/14 of Section 9 T. 33 N. R. 70 E., M.D.B.&M.

Description of Proposed Action:
The proposed action includes construction of a fire station with associated parking and street access improvements, pedestrian access improvements, storm drainage and utility improvements and landscaping at the site of the existing city of West Wendover City Hall Government Complex. The project includes construction of the following improvements:

- Area of Disturbance (Fire station site, utility connections in North Gene L. Jones Way, construction of segment of new public street, relocation of stormwater channel and additional city hall parking.): 3.80 acres.
- Completed Fire Station Site Area: 55,100 square feet or 1.26 acres.
- Building Area: 11,383 square feet.
- Paved Area (fire station site): 0.37 acres or 28.97% of site.
- Building Includes: 5 apparatus bays.
- Building Includes: Offices and activity center including kitchen, dayroom, and equipment storage.
- Approximately 250-foot-long segment of new public street for access to fire station.
- Additional joint use parking at City Hall containing 7 stalls.
- See attached conceptual drawings for location and proposed layout.

See attached conceptual drawings under cover titled "Attachment A" for location and proposed layout.

Need for Proposed Action:

The West Wendover Fire Station was constructed in the 1980's by Elko County when the community was a "Township" under the general jurisdiction of Elko County with a community population of approximately 1,500. In 1991, the City of West Wendover became incorporated and inherited the County's facilities. The City proceeded to grow in population surpassing 5,000 people. The fire station was no longer able to meet the space and operational requirements and provide efficient and effective local government operations.

The current 1980's fire station is a 4,400 square foot leased facility on approximately 1 acre of property located at 975 Wendover Boulevard on the east side of the community. Due to the lack of indoor storage the Fire Department stores its HazMat response and Mobile Command unit along with additional equipment items outdoors which shortens the life span of the equipment.
Though the 3 short-bay facility was adequate for the needs of the fire service in the early 1980's under Elko County when it was constructed, today the facility is too small, outdated and as noted, the City leases the property/facility from a private holding which limits the options for the city in the long-term.

The proposed West Wendover Fire Station is an important long-term public safety facility for the City of West Wendover. Originally planned in 2007 to be part of the construction of the City Hall Government Complex, due to cost, the Fire Station portion of the project was delayed. The proposed site is central to the community and allows the shared use of parking and utilities to minimize the necessary footprint and to provide operational efficiencies. The proposed action will provide a centralized location with a facility that is designed to serve the city well into the future.

Area of Potential Effect (APE):

In compliance with the 1966 National Historic Preservation Act Section 106, an area of Potential Effect (APE) has been determined for the areas surrounding the project. The Area of Potential Effect includes parcels and rights-of-way directly adjacent to the proposed action. Please see the attached maps under a cover titled "Attachment B" for a visual description of the APE. A written description of each of the properties located within the APE follows:

1. Subject parcel know as Parcel "B" on Map File # 493280 (as recorded in the Office of the Elko County Recorder) and described as Section 9 SW1/4 SW/14 T33N R70E MDB&M on the United States Patent in favor of the City of West Wendover Document File # 802696 (as recorded in the Office of the Elko County Recorder). The proposed action is located within an area of disturbance of approximately 3.85 acres of the total 30.13 acre parcel. The Fire Station is located in the northwest quadrant of Parcel "B" directly west of the existing City Hall building. City Hall, North Gene L. Joines Way and all the utility and surface improvements serving the site were constructed in 2009. The existing utilities and surface improvements were designed and constructed to accommodate the Fire Station.

   Parcel "B" also includes a small portion of the historic Victory Highway (constructed in 1925) which the City has preserved as a historical interpretive trail. At its closest point the Fire Station improvements that comprise of the proposed action will be located 288 feet from the Victory Highway trail. The proposed action will utilize existing utilities and surface improvements for its construction and operation. There will be no work on or near the Victory Highway. The City has determined that the proposed action will not negatively effect the historic remnant of the Victory Highway.

2. The property located adjacent to the south boundary of Parcel "B" is known as Parcel "C" on Map File # 493280 (as recorded in the Office of the Elko County Recorder) and is a portion of the property described as Section 16 Lot 17 MDB&M on the United States Patent in favor of the City of West Wendover Document File # 802696 (as recorded in the Office of the Elko County

Recorder). Parcel "C" is 3.82 acres and contains a portion of the historic Victory Highway trail fronting the proposed action. No work or additional improvements will be completed on this parcel as part of the proposed action. The City believes that the proposed action has no impact on the historic remnant of the Victory Highway located on this parcel.

3. The Wendover Boulevard Right-of-Way is located along the south boundary of Parcel "C". The Wendover Boulevard was constructed in the 1940's as a replacement for the Victory Highway. It was titled Highway 40 and served as a replacement to the Victory Highway until 1959 when the first segments of the Interstate 80 were constructed and the section of Highway 40 was downgraded to serve in the capacity as a local road. In the early 1990's ownership of Wendover Boulevard was handed over to the City. The segment fronting the proposed action is 132 feet wide and has been consistently maintained and upgraded to meet the needs of the community. No historic fabric remains along this section of Wendover Boulevard.

4. The property located adjacent to the west boundary of Parcel "B" is known as a portion of Parcel "A" on Map File # 493280 (as recorded in the Office of the Elko County Recorder) and is a portion of the property described as Section 8 Lot 10 MDB&M on the United States Patent in favor of the City of West Wendover Document File # 802696 (as recorded in the Office of the Elko County Recorder). Parcel "A" is 15.90 acres. A remnant of the Victory Highway runs through this parcel roughly parallel to Wendover Boulevard and is not affected by the proposed action. The closest improvement of the proposed action is located 314 feet from the east Parcel "A" boundary.

5. Interstate 80 is located along the north boundary of the Parcel "C" It was constructed in 1959 and has been in constant service ever since. Maintenance and upgrades occur on a regular basis and the original historic fabric has been lost in the upgrades. At this location I-80 varies in width but is roughly 600 plus feet wide.

6. The property located adjacent to the east Parcel "C" boundary is privately held and has been completely disturbed multiple times in various attempts to develop the property. There are no remnants of the Victory Highway remaining on this parcel. No historic structures exist on this property.

Identification of Resources:

The City is unaware of any cultural resources other than the parcel is crossed by a remnant of the Victory Highway. The Victory Highway was a transcontinental highway that was designated in 1921 as a tribute to those who had served their country in World War I. The segment of the highway located in West Wendover was constructed in 1925. This segment of highway was replaced in the 1940's with Highway 40 now know as Wendover Boulevard. At some time between the construction of Highway 40 and the construction of Interstate 80 the drainage culverts were removed to facilitate the flow of storm water through the natural drainages. The highway remnant was slowly whittled down as the City grew and land was placed in private hands. The remaining section is a little over 5,000 feet long.

Attached are photos of the site of the proposed action and photos of the surrounding area, as well as a map showing the location of the photos found in "Attachment C". Dates of construction for structures located adjacent to the proposed action are noted on the APE map found in "Attachment B".

Public and Tribal Outreach:

Public outreach has been a priority as part of the planning and environmental review processes for the proposed action. The public has been provided the opportunity to learn about and comment on the proposed action multiple times during the process of selecting this project for potential funding and additional public comments periods that will occur to inform the public of the environmental review findings.

Public outreach has also included a request for consultation with tribal entities that may have a historic interest associated with the site. The U.S. Department of Housing and Urban Development – Tribal Directory Assessment Tool (TDAT) was used to determine which tribes would be contacted. In many cases the contact information on the TDAT was obsolete and therefore required online research as well as contacting known tribal members to find out to whom the request for outreach should be sent. Tribal outreach for the proposed action included requests for comments from the following people:

- Robert Brunoe, THPO
  Confederated Tribes Warm Spring Reservation of Oregon

- Nick Knight Sr., Chairman
  Elko Band of the Te-Moak Tribe of Western Shoshone Indians of Nevada

- Brian Mason, Chairman,
  Shoshone – Paiute Tribes of the Duck Valley Reservation

- Nathan Small, Chairman, Fort Hall Business Council
  Shoshone - Bannock Tribes

- Rupert Steele, Chairman
  Confederated Tribes of the Goshute Reservation

- Elisha Mockerman, Chairman
  Yomba Shoshone Tribe of the Yomba Reservation

- Joshua Mann, THPO
  Shoshone Tribe of the Wind River Reservation

- Davis Gonzales, Chairman
  Te-Moak Tribe of Western Shoshone Indians of Nevada

- Alicia Agular, Administrator
  Wells Band of the Te-Moak Tribe of Western Shoshone Indians of Nevada

- Duane M. Garcia Sr., Chairman
  South Fork Band of the Te-Moak Tribe of Western Shoshone Indians of Nevada

The requests for consultation were sent to each of the tribes on February 7th and 8th, 2023. Only one response was received on March 17, 2023 from Mr. Garcia of the South Fork Band of the Te-Moak Tribe of Western Shoshone Indians of Nevada. Mr. Garcia's response: "It is the conclusion that this project has no determined impacts, as well as no environmental or health impacts to the South Fork Band Reservation or its community members."

Determination of Affect:

The City recognizes that a remnant of historic the Victory Highway is located on the site and on adjacent properties as detailed in the description of the Area of Potential Effect and the associated map. However, the City has determined that the proposed action will not impact the Victory Highway due to the distance between the proposed action and the historic highway (a minimum of 288'), and due to the fact that the access to the fire station and the utilities serving the fire station area are already in place and have capacity available to serve the fire station at full operational capacity. No disturbance of the City property is anticipated outside of the 3.85 acre area of disturbance. Nor will the proposed action affect surrounding parcels within or beyond the APE.

The City of West Wendover respectfully requests that SHPO concur with the City's findings.

Thank you for your assistance on this Environmental Review. Please do not hesitate to contact Chris Melville or myself if you need any additional information on the proposed action or have additional questions. I can be contacted by phone: 801-299-1327 ext. 3731 or by e-mail: shay.stark@aquaeng.com.

Please address your response to:

Chris Melville, City Manager
City of West Wendover

1111 N. Gene L. Jones Way
P.O. Box 2825
West Wendover, Nevada 89883
Phone: 775-664-3081
Email: cmelville@westwendovercity.com

Sincerely,



Shay Stark
Project Manager

Enclosures: Attachment A - Project Conceptual Drawings and Maps
Attachment B - Area of Potential Effect Map
Attachment C - Site Photos and Photo Location Map

Attachment A – Project Location and Conceptual Drawings

City of West Wendover Fire Station #13 Project Location Map



0 0.13 0.25 0.5 Miles

N

FIGURE 1

CONCEPT DESIGN

ARCHITECTURAL DRAWINGS

CONCEPT SITE PLAN

NOTE: Refer to digital attachments for full-size drawings



1 CONCEPT SITE PLAN REDUCED
SCALE: 1" = 20'-0"

0' 10' 20' 40' 60'

NORTH

CONCEPT FLOOR PLAN

NOTE: Refer to digital attachments for full-size drawings

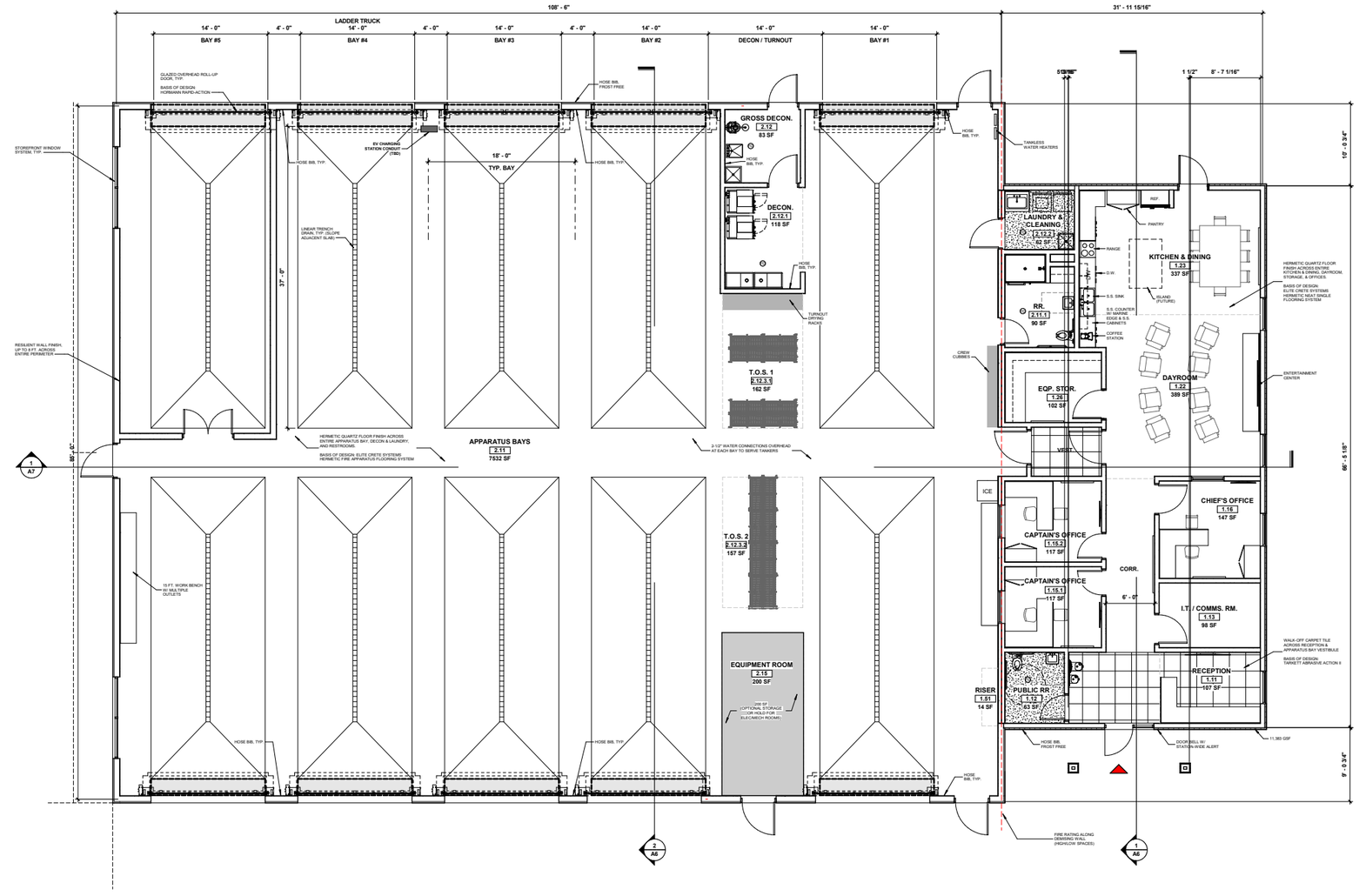

1 CONCEPT FLOOR PLAN - 5-BAY CONFIGURATION
SCALE: 3/16" = 1'-0"

11,383 SF

0' 4' 8' 16' 24'

NORTH

SE AERIAL VIEW



NE EYE-LEVEL VIEW



SE EYE-LEVEL VIEW



SW EYE-LEVEL VIEW



CIVIL DESIGN - SITE PLAN

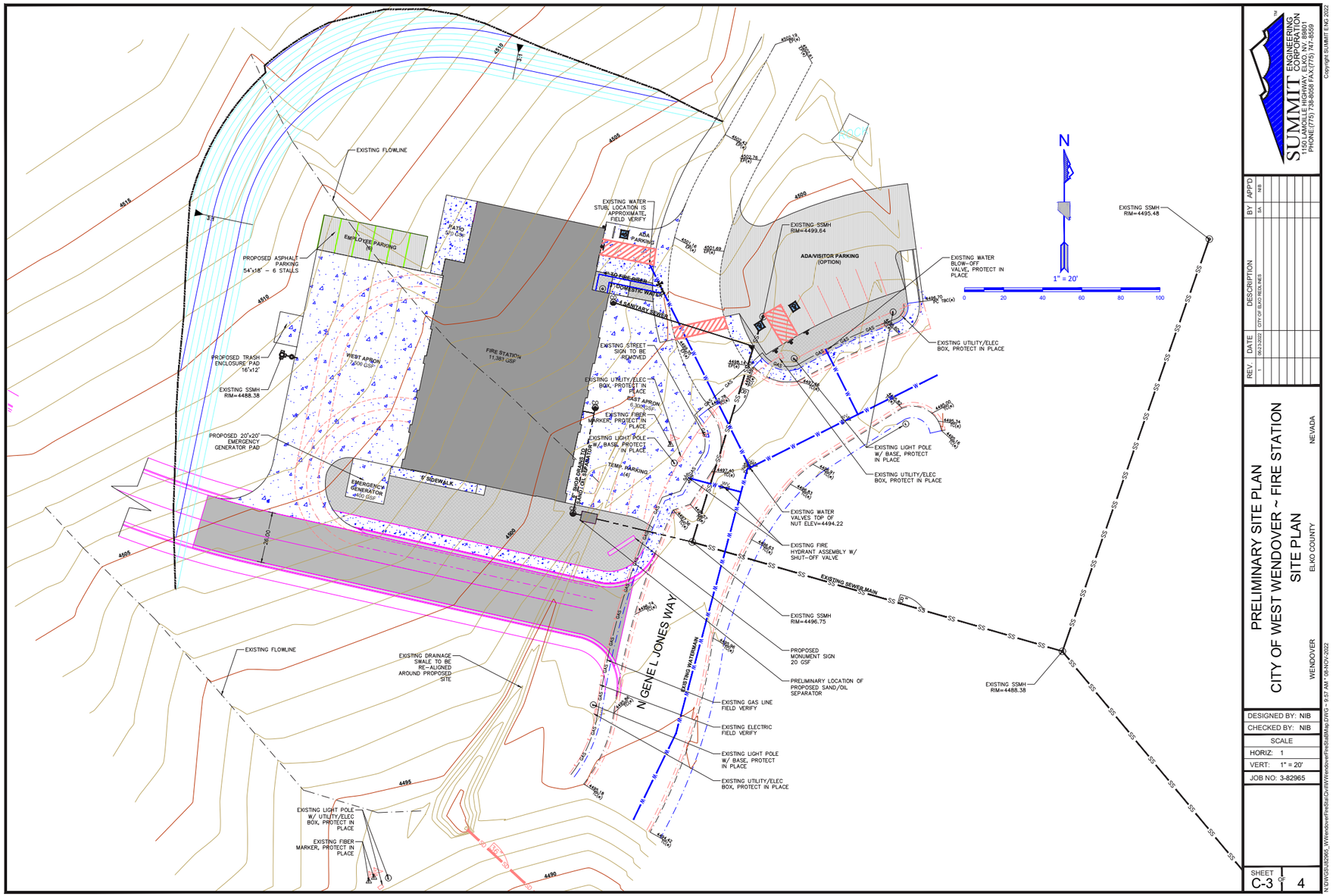

SUMMIT ENGINEERING CORPORATION
1150 LAMOILLE HIGHWAY, ELKO, NV. 89801
PHONE:(775) 738-8055 FAX:(775) 747-8259

Copyright SUMMIT E/N/3 2022

REV.	DATE	DESCRIPTION	BY	APP'D
1	9/23/2022	CITY OF ELKO REDLINES	MS	MB

PRELIMINARY SITE PLAN
CITY OF WEST WENDOVER ~ FIRE STATION
SITE PLAN
WENDOVER ELKO COUNTY NEVADA

DESIGNED BY: NIB
CHECKED BY: NIB
SCALE
HORIZ: 1
VERT: 1" = 20'
JOB NO: 3-82965

SHEET C-3 OF 4

N:\DWGS\82965_WWendoverFireStat\Civil\WWendoverFireStatMap.DWG - 9:57 AM - 08-NOV-2022

Attachment B – Area of Potential Affect Map

City of West Wendover Fire Station #13 Project APE Map

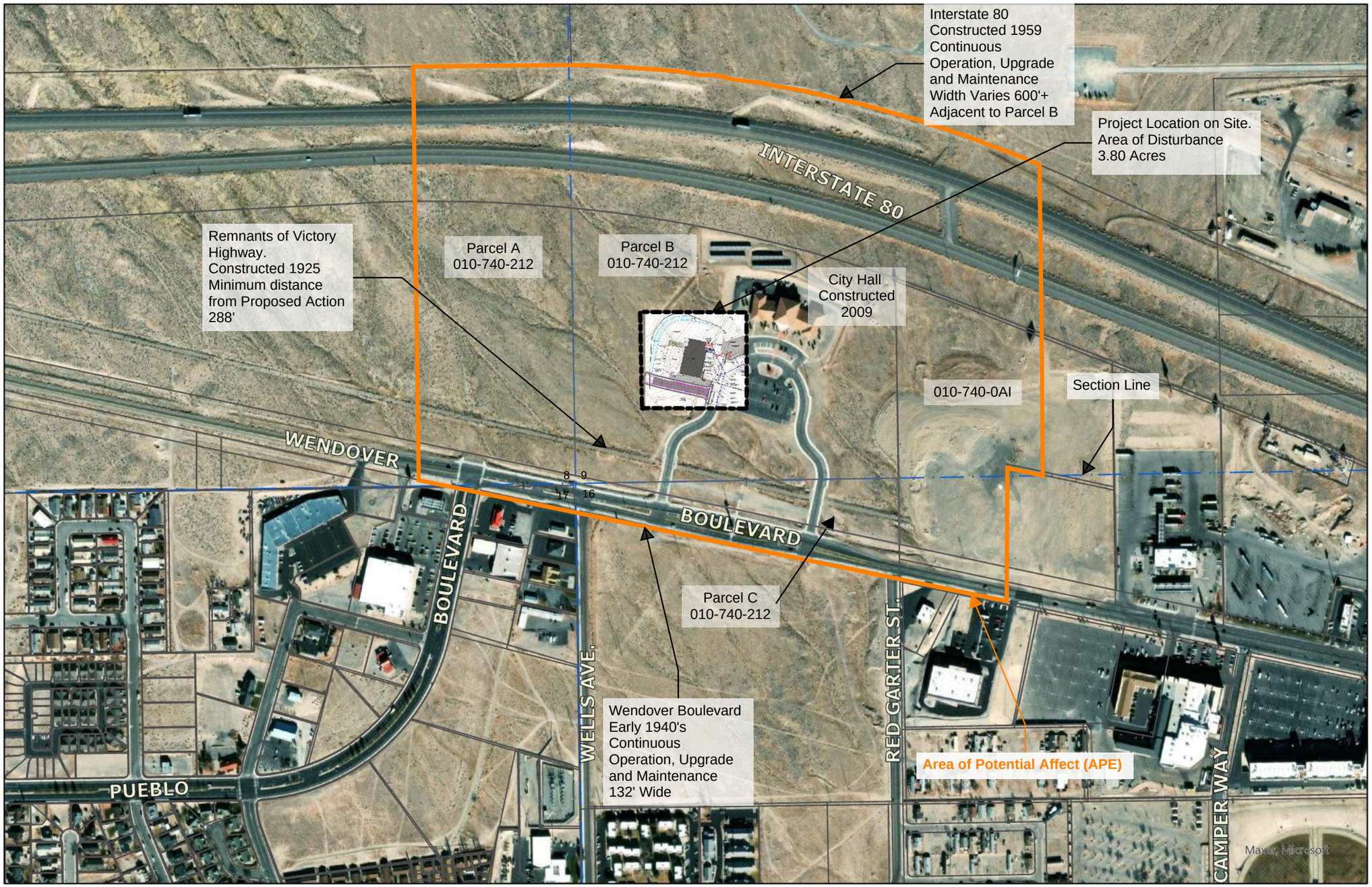

0 0.07 0.15 0.3 Miles

N

FIGURE 1

Attachment C – Photos and Photo Location Map

City of West Wendover Fire Station #13 Project Photo Location Map

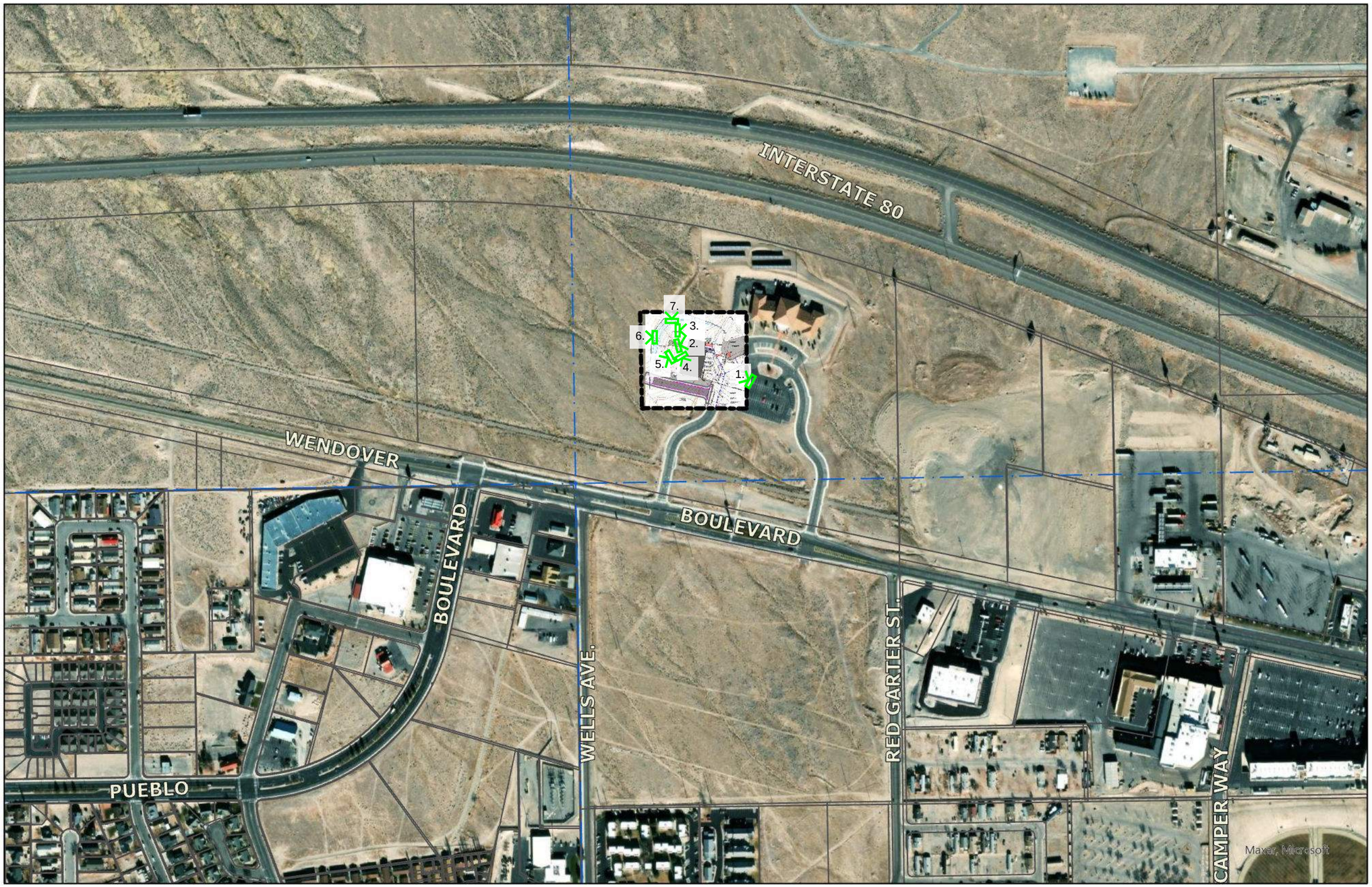

0 0.07 0.15 0.3 Miles

N

FIGURE 2

Site Photos



1. Looking west at the site of the proposed action from the city hall parking lot.



2. Looking northeast from the site at the existing city hall facility.



3. Looking east from the site at the existing city hall and parking lot.



4. Looking southeast from the site at Wendover Will Monument in Wendover Boulevard and the Victory Highway Interpretive trail.



5. Looking south/southwest from the site at Wendover Boulevard.



6. Looking west from the site.



7. Looking north from the site

Shay Stark

From: NV CRIS <nvcris@shpo.nv.gov>
Sent: Thursday, July 13, 2023 9:17 AM
To: Shay Stark; NV CRIS
Subject: RE: City of West Wendover Fire Station #13 - Environmental Review - Section 106 Review

Hi Shay – I checked your project area and you're correct, the 2 resources you mention are within the APE and they are the only recorded resources in that area.

Hope this helps!

Best,
Karyn

From: Shay Stark <shay.stark@aquaeng.com>
Sent: Wednesday, July 12, 2023 4:47 PM
To: NV CRIS <nvcris@shpo.nv.gov>
Subject: RE: City of West Wendover Fire Station #13 - Environmental Review - Section 106 Review

WARNING - This email originated from outside the State of Nevada. Exercise caution when opening attachments or clicking links, especially from unknown senders.

Karyn,

Attached is a shape file that is the proposed boundary of the Area of Potential Effect (APE) for the West Wendover Fire Station. I am aware that there is a remnant of the Victory Highway within this APE as well there is a study by BLM that noted a transcontinental telephone line that very likely passed through this area however, I am not aware of any remnants of that line in this location. The City relocated the Wendover Will Cowboy that sat on the state line to this location also but where that has been relocated I don't know if that counts as a resource. I am not sure if you are able to tell me about specific resources or if it is just a yes there are resources or no there are not. But if you do find a number of resources can you tell me if any of these resources I have noted as being present with in the boundary are on the list that is generated?

Thanks,

SHAY STARK – PLANNER/DESIGNER
AQUA ENGINEERING
OFFICE (801) 299-1327 DIRECT (801) 683-3731
shays@aquaeng.com www.aquaeng.com
533 W 2600 S Suite 275 Bountiful, UT 84010

NOTICE: This email message is for the sole use of the intended recipient(s) and may contain confidential and privileged information. Any unauthorized review, use, disclosure or distribution is prohibited. If you are not the intended recipient, please contact the sender by reply email and destroy all copies of the original message. The information transmitted (including attachments) is covered by the Electronics Communications Privacy Act, 18 U.S.C. 2510-2521.

From: NV CRIS <nvcris@shpo.nv.gov>
Sent: Tuesday, June 20, 2023 11:15 AM
To: Shay Stark <shay.stark@aquaeng.com>; NV CRIS <nvcris@shpo.nv.gov>
Subject: RE: City of West Wendover Fire Station #13 - Environmental Review - Section 106 Review

Hi Shay – Access to NVCRIS is limited to folks who meet the Secretary of Interior's Standards for Archaeology.

If you do not meet those standards, we provide a free presence/absence check of your project area. Just send shapefiles of your project area to me and I can let you know if there are any resources within that area.

Hope this helps!

Cheers,
Karyn

Karyn de Dufour
Nevada State Historic Preservation Office
NVCRIS Manager
Department of Conservation and Natural Resources
901 South Stewart Street, Suite 5004
Carson City, NV 89701
(O): 775-684-3447 (F) 775-684-3442
kdedufour@shpo.nv.gov

http://dcnr.nv.gov/" st Connect with us: 77.75pt;margin-top:5.8pt;width:135.1pt;height:31.95pt;z-index:251660288;visibility:visible;mso-wrap-style:square;mso-width-percent:0;mso-height-percent:0;mso-wrap-distance-left:9pt;mso-wrap-distance-top:0;mso-wrap-distance-right:9pt;mso-wrap-distance-bottom:0;mso-position-horizontal:absolute;mso-position-horizontal-relative:text;mso-position-vertical:absolute;mso-position-vertical-relative:text;mso-width-percent:0;mso-height-percent:0;mso-width-

relative:page;mso-height-relative:page' o:button="t"> http://shpo.nv.gov/" style='position:absolute;margin-left:0;margin-top:-.05pt;width:174.3pt;height:47.15pt;z-index:251665408;visibility:visible;mso-wrap-style:square;mso-width-percent:0;mso-height-percent:0;mso-wrap-distance-left:9pt;mso-wrap-distance-top:0;mso-wrap-distance-right:9pt;mso-wrap-distance-bottom:0;mso-position-horizontal:absolute;mso-position-horizontal-relative:text;mso-position-vertical:absolute;mso-position-vertical-relative:text;mso-width-percent:0;mso-height-percent:0;mso-width-relative:page;mso-height-relative:page' o:button="t">

From: Shay Stark <shay.stark@aquaeng.com>
Sent: Monday, June 19, 2023 1:42 PM
To: NV CRIS <nvcris@shpo.nv.gov>
Subject: City of West Wendover Fire Station #13 - Environmental Review - Section 106 Review

WARNING - This email originated from outside the State of Nevada. Exercise caution when opening attachments or clicking links, especially from unknown senders.

I am a consultant conducting a Section 106 Review in conjunction with an Environmental Review for the City of West Wendover, Nevada. The proposed action being considered is the construction of a new fire station. As part of the Section 106 review I am trying to determine what cultural resources might be on file in the NVCRIS within and around the Area of Potential Effect for the proposed action. I am interested in obtaining the necessary application forms and subscription information to gain access to the database.

Thank you for your help with this.

Thanks Again,

SHAY STARK – PLANNER/DESIGNER
AQUA ENGINEERING
OFFICE (801) 299-1327 DIRECT (801) 683-3731
shays@aquaeng.com www.aquaeng.com
533 W 2600 S Suite 275 Bountiful, UT 84010

NOTICE: This email message is for the sole use of the intended recipient(s) and may contain confidential and privileged information. Any unauthorized review, use, disclosure or distribution is prohibited. If you are not the intended recipient, please contact the sender by reply email and destroy all copies of the original message. The information transmitted (including attachments) is covered by the Electronics Communications Privacy Act, 18 U.S.C. 2510-2521.

STATE OF NEVADA
DEPARTMENT OF CULTURAL AFFAIRS
Nevada State Historic Preservation Office
100 N. Stewart Street
Carson City, Nevada 89701
(775) 684-3448 • Fax (775) 684-3442
www.nvshpo.org

KENNY C. GUINN
Governor

SCOTT K. SISCO
Interim Director

RONALD M. JAMES
State Historic Preservation Officer

ELKO FIELD OFFICE		
DM		
ADM		
PLAN/NEPA		
LAW ENF		
NON-RENEW	✓	
RENEWABLE		
S.S.		
FIRE		
REHAB		
CA. TRAIL		
CF CODE		
X=ACTION		

August 9, 2006

Clinton R. Oke
Assistant Field Manager
Non-Renewable Resources
Elko Field Office
3900 East Idaho Street
Elko NV 89801-4611

RE: Wendover R&PP Lease, Salt Lake Desert, Elko County (Bureau of Land Management Report Number: 1-2516).

Dear Mr. Oke:

The Nevada State Historic Preservation Office (SHPO) reviewed the subject undertaking. The SHPO concurs with the Bureau of Land Management's determination that the segment of the following site does not contribute to the linear feature's National Register eligibility:

CrNV-01-9118 (transcontinental telephone line).

The SHPO concurs with the Bureau of Land Management's determination that the following historic property is eligible for the National Register under the Secretary's criteria a, c, and d:

CrNV-01-8957 (segment of the Victory Highway).

The SHPO concurs with the Bureau of Land Management's determination that the subject undertaking will pose an adverse effect to the above historic property.

I have reviewed the memorandum of agreement and agree that implementation of the stipulations will treat the adverse effects to CrNV-01-8957, a segment of the Victory Highway. In particular, the SHPO is pleased to note that the historic roadbed will be reused as a walking biking trail and will be interpreted. I have signed the agreement, retained a copy and am returning the original to you with this correspondence. Please file a copy with the Advisory Council on Historic Preservation.

Thank you for your cooperation in the negotiations. We look forward to working with you on future projects.

Sincerely,



Ronald M. James
State Historic Preservation Officer

MEMORANDUM OF AGREEMENT
AMONG
THE ELKO FIELD OFFICE OF THE BUREAU OF LAND MANAGEMENT,
THE NEVADA STATE HISTORIC PRESERVATION OFFICER,
AND THE CITY OF WEST WENDOVER, NEVADA,
REGARDING
RESOLUTION OF ADVERSE EFFECTS RESULTING FROM
LEASING OF 124.67 ACRES OF PUBLIC LAND

WHEREAS, the Elko Field Office of the Bureau of Land Management (BLM) pursuant to the Nevada Protocol and in consultation with the Nevada State Historic Preservation Office (NSHPO), has determined that a one mile segment of the Victory Highway/U.S. 40 in T. 33 N., R. 70 E. MDM, within Sections 8, 9 and 16 is eligible for inclusion in the National Register of Historic Places; and

WHEREAS the BLM has determined that leasing the parcel containing this highway segment to the City of West Wendover under the Recreation and Public Purposes Act, and subsequent alteration of the historic property and its setting during construction of the city's administrative center, would result in an adverse effect; and

WHEREAS, BLM has notified the Advisory Council on Historic Preservation (Council) of these adverse effects in accordance with 36 C.F.R. 800.6(a)(1), regulations implementing Section 106 of the National Historic Preservation Act (16 U.S.C.470f); and

WHEREAS, the proponent, West Wendover, Nevada, participated in the consultation and has been invited to concur in this memorandum of agreement, and will pay for and implement mitigation measures for the property as outlined below in this MOA:

NOW, THEREFORE, BLM and the NSHPO enter into this Memorandum of Agreement (MOA) which provides that the undertaking shall be implemented in accordance with the following treatment measures in order to mitigate the effect of the undertaking on this historic property.

I. PURPOSE:

Execution of this MOA by BLM and NSHPO and filing of the MOA with the Council pursuant to 36 C.F.R. 800.6(b)(1)(iv) prior to issuing the lease, and implementation of its terms evidence that BLM has taken into account the effects of this undertaking on historic properties and afforded the Council an opportunity to comment.

II. TREATMENT MEASURES:

The BLM shall ensure implementation of the following measures:

A. BLM will consult with the Pacific Great Basin System Support Office of the National Park Service (NPS) and prepare Draft Historical American Engineering Record (HAER) level documentation, as recommended by NPS for this segment of the Victory Highway/U.S. 40). Draft HAER documentation will be submitted to NPS

within six months following completion of field work to document the one mile segment of the Victory Highway. Final documentation will be submitted within two months after receipt of NPS comments on the draft.

B. Final copies of the photographs will be approved by NPS before the highway is altered. HAER narrative documentation does not need be approved by NPS prior to alteration of the highway, but draft and final copies will be submitted within the time periods specified above at II.A.

C. A copy of the final HAER documentation, as approved by NPS, will be sent to the NSHPO in Carson City, Nevada.

D. The following terms and conditions will be inserted into the R&PP lease agreement and carried through to the deed should the property be patented under this Act.

1. The historic Victory Highway/U.S. 40 roadway within the lease parcel shall be preserved in place except at locations where the roadbed must be cut to allow street access to the city complex. The existing asphalt shall be preserved to the extent possible. In locations where the asphalt has deteriorated or been removed such as at the western end of the lease parcel and the culvert removal locations, the roadbed shall be maintained as a hard packed gravel surface.
2. Utilities shall be located within road crossing corridors, or bored under the highway so as to not disturb the pavement more than necessary.
3. At street crossings the Victory Highway shall be saw cut and removed only for the width of the road and sidewalk, plus at most a 10 foot transition on the outside of the sidewalk.
4. The historic roadbed will require some repair prior to incorporating it into a walking/biking trail and continued maintenance to control vegetation. Repair and maintenance activities shall be conducted in a manner that preserves the integrity of the historic property. Drainages will be assessed to determine the necessity of installing culverts. If culverts are needed they will be designed to be unobtrusive and not distract from the historic nature of the highway. Discarded facing stones from previously removed culverts can be used with any new culverts. Compacted fill is to be used to bring previous culvert locations up to grade or plug holes in the asphalt. Vegetation removal from the paved surface shall be done in a manner that causes least impact to the asphalt as outlined on pages 34-35 of cultural resources inventory report BLM1-2516.
5. West Wendover shall install interpretive signs along or near the historic property. As proposed by the City, they will work with the BLM to develop a plan for preservation and phased interpretation of the highway and the features along it. The extant culverts, billboard remains and the nearby transcontinental telephone line will be among the interpreted features. Discarded culvert facing stones may be used for construction of some of the monuments.

III. Objections:

Should any party to this MOA object at any time to any actions proposed or the manner in which the terms of this MOA are implemented, BLM will consult with the objecting party to

resolve the objection. If BLM determines, within 30 days, that such objection(s) can not be resolved, BLM will:

A. Forward all documentation relevant to the dispute to the Council in accordance with 36 C.F.R. 800.2(b)(2). Upon receipt of adequate documentation, the Council will review and advise BLM on the resolution of the objection within 30 days. Any comment provided by the Council, and all comments from the parties to the MOA will be taken into account by BLM in reaching a final decision regarding the dispute.
B. If the Council does not provide comments regarding the dispute within 30 days after receipt of adequate documentation, BLM may render a decision regarding the dispute. In reaching its decision, BLM will take into account all comments regarding the dispute from the parties to the MOA.
C. BLM's responsibility to carry out all other actions subject to this MOA that are not the subject of the dispute remain unchanged. BLM will notify all parties of its decision in writing before implementing that portion of the undertaking subject to dispute under this stipulation. BLM's decision will be final.

IV. Termination:

If the MOA is not amended following the consultation set out in Stipulation II, it may be terminated by any signatory or invited signatory. Within 30 days following termination, BLM shall notify the signatories if it will initiate consultation to execute a MOA with the signatoried under 36 C.F.R. 800.6(c)(1) or request the comment of the Council under 36 C.F.R. 800.7(1) and proceed accordingly.

Execution of this Memorandum of Agreement and implementation of its terms evidence that the BLM has afforded the Nevada SHPO an opportunity to comment on the West Wendover Recreation and Public Purposes Lease and its effect on historic properties, and that the BLM has taken into account the effects of the undertaking on historic properties.

U.S. DEPARTMENT OF THE INTERIOR, BUREAU OF LAND MANAGEMENT

By: Helen Hankins Date: 8-3-2006

Helen Hankins, Elko Field Office Manager

NEVADA STATE HISTORIC PRESERVATION OFFICE

By: _____ Date: 8-9-06
for Alice M. Baldrica, Deputy SHPO

CONCUR:

By: _____ Date: 08-03-06
City of West Wendover

United States
Department of the Interior
Bureau of Land Management

PHASE I
ENVIRONMENTAL SITE ASSESSMENT

WENDOVER
RECREATION & PUBLIC PURPOSES LEASE

ELKO COUNTY, NEVADA

T. 33 N., R. 70 E. M.D.B.& M.
Portion of: Sec. 8, E½SE¼SE¼,
Portion of : Sec. 9, SW¼, SW¼,
Portion of : Sec. 16, NW¼NW¼,

Containing 81.88 acres more or less

February 2006

Prepared by:

Deborah N. McFarlane
HazMat / Geologist
Elko Field Office

2/28/2006
Date

Management Acknowledgment:

Helen Hankins
Field Office Manager
Elko Field Office

3/6/2006
Date

TABLE OF CONTENTS

SUMMARY & CONCLUSIONS 1
INTRODUCTION 1
PURPOSE 1
LANDS INVOLVED 1
LEGAL DESCRIPTION 1
PHYSICAL SETTING 2
PHYSIOGRAPHIC DATA 2
GEOLOGY 2
HYDROLOGY 2
Surface Water 2
Ground Water 2
CLIMATE 2
RECORD REVIEW 3
RECORDS AND AUTHORIZATIONS.....3
AERIAL PHOTO ANALYSIS 3
ENVIRONMENTAL RECORDS 3
INTERVIEWS 4
SITE RECONNAISSANCE 5
FINDINGS AND CONCLUSIONS 5
BIBLIOGRAPHY 5
Figure 1 Location Map 6
Figure 2 Air photo with R&PP 7
Figure 3 Geologic Map with sections 8
APPENDIX A, LEGAL DESCRIPTIONS 9
APPENDIX B, PHOTOGRAPHS 18
APPENDIX C, EPA ENVIROMAPPER 21

SUMMARY & CONCLUSIONS

The proposed Wendover Recreation and Public Purpose (R&PP) lease includes four parcels totaling approximately 81.88 acres (see appendix A, Legal Descriptions). The property lies on the north edge of the city of West Wendover, near the intersection of Wendover Blvd. and Wells Avenue, in portions of sections 8, 9, and 16, T. 33 N., R. 70 E. M.D.B.&M.

This Phase I Environmental Site Assessment was performed on the subject property in conformance with the scope and limitations of ASTM Standard E-1527. Based on (1) a review of the Bureau of Land Management files, (2) a review of applicable federal and state databases, and (3) a site inspection, this assessment revealed no evidence of recognized environmental conditions in connection with the property.

INTRODUCTION

The City of West Wendover applied for this Recreation and Public Purposes lease in July 2005. With this lease application, the City is requesting to lease 4 parcels. They plan five phases of building over a fifteen year period and have obtained some funding through a Community Block Grant. Phase 1 plans are to build a City Hall, phase 2 plans are for a medical center, phase 3 a library, phase 4 a city park and amphitheater, and phase 5 a convention center.

Parcels A, B, C, and D, as described in the legal descriptions in Appendix A, are the subject of this Environmental Site Assessment. A site inspection was conducted on February 7, 2006.

PURPOSE

The purpose of this environmental site assessment is to review existing information regarding the City of West Wendover R&PP lease and to assess the site for recognized environmental conditions including, hazardous substances and petroleum products having been spilled, released, or stored on the subject parcel. It should not be used for other purposes.

LANDS INVOLVED

The property lies on the north edge of the city of West Wendover, near the intersection of Wendover Blvd. and Wells Avenue, in portions of sections 8, 9, and 16, T. 33 N., R. 70 E. M.D.B.&M. The northern most parcels (A, B, C) lie between Wendover Blvd. and Interstate 80 and the southern most parcel (D) lies just south of Wendover Blvd. Lands to the east of parcels A, B, and C are private. Lands to the west and north of parcels A, B, and C are public. Parcel D has public lands only to the north.

LEGAL DESCRIPTION

The legal descriptions for the four parcels proposed for the R&PP lease to the City of West Wendover are provided in Appendix A. The 4 parcels contain 81.88 acres more or less.

PHYSICAL SETTING

PHYSIOGRAPHIC DATA

The subject parcel lies within the Basin and Range physiographic province, a region characterized by a series of generally north-trending mountain ranges separated by alluviated valleys. More specifically, the R&PP lies on the western edge of the Great Salt Lake desert at an elevation of 4500 feet.

GEOLOGY

The Basin and Range physiographic province is the result of Tertiary extensional tectonics where the valleys have been down dropped relative to the mountains. Generally the valleys are filled with thousands of feet of lacustrine and riverine sediments of Tertiary and Quaternary age and volcanic tuffs of Tertiary age. Surrounding mountains, Toano Range, 7 miles to the west, and Leppy Peak, 1 mile to the north, are composed of Paleozoic marine sedimentary rocks and Tertiary volcanics.

Quaternary lacustrine and alluviul deposits are present on the surface of the parcels. Surface units consist of unconsolidated, soft, white, calcareous clay; lacustrine silt; and sparse tongues of gravel forming thin veneers over older alluvium and pediment surfaces.

HYDROLOGY

Surface Water

Two small ephemeral drainages cross parcels A, B and C. These ephemeral drainages are incised into the sediments and carry water in response to heavy rain storms or snow melt. There was no water in the drainages on February 7, 2006.

Ground Water

Hill Air Force Base drilled monitor wells in the SE¼SE¼, section 16. Static water level in the wells ranged between 18.5 feet and 27 feet deep. Wendover Land Company owns two municipal wells in NW¼NW¼, section 17, T. 33 N., R. 70 E. The driller's logs show that the static water level was 460 feet in one well and 500 feet in the other. It is hard to read the copies of the driller's logs, but it appears that the main water table in both wells was reached at about 605 feet. The water table under the subject parcels is unknown. Since the subject parcels lie about half way in distance and in elevation between the two clusters of wells, the water level under the parcels is probably about half way between what is observed in Hill Air Force Base wells in section 16 and Wendover Land wells in section 17.

CLIMATE

The climate in the area is semiarid with annual precipitation averaging 4.8 inches of precipitation

per year. Daily temperatures exhibit a large diurnal range, averaging 26 degrees F in January and 43 degrees F in August. Temperatures can range from a low of -32 degrees F in winter to a high of 103 degrees F in summer.

RECORD REVIEW

RECORDS & AUTHORIZATIONS

The subject parcel is public land and has historically been public land. Parcels C & D in section 16 were part of oil and gas leases in 1975, 1976, and 1979. Portions of section 9 were leased for oil and gas in 1986. There have been numerous rights-of-ways across sections 8, 9, and 16. With the exception of the railroad and highway right-of-ways there is no evidence in historical records of past use which would suggest that hazardous materials could have been spilled on the subject parcels nor should they be suspected.

AERIAL PHOTO ANALYSIS

A black and white aerial photograph from October 2, 1968, at a scale of approximately 1:16,800, an orthophoto quadrangle map from 1972 at a scale of 1:24,000, and a color photo from August 1, 1995, at an approximate scale of 1:25,000 were reviewed. In the 1968 black and white photo and the 1972 orthophoto quadrangle, the parcel is undeveloped range land with Highway 40 and the Victory Highway cutting across parcels A, B, and C. A gravel pit is located adjacent to parcel D in the NE¼NW¼, section 16. In the 1995 photograph, Interstate 80 has been added, the entire City of West Wendover grew in what, in the earlier photos, was open range land, and Highway Alternate 93 has been slightly modified so that it intersects old Highway 40, (now Wendover Boulevard) at a right angle. The subject parcels are still open range. Parcel D is surrounded on the west, south, and east by the town. Several dirt tracks cross the parcel but mostly it is undisturbed. A power line crossed parcels B, C, and D. Although spills could have occurred along the highways there is no indication in the aerial photos to suggest that spills have occurred nor is there any disturbance evident in the aerial photographs suggesting that hazardous materials should be suspected.

ENVIRONMENTAL RECORDS

The following environmental records were searched:

Federal: Environmental Protection Agency

National Priority List (NPL): The NPL list is an EPA listing of uncontrolled or abandoned hazardous waste sites that have been targeted for possible long-term remedial action under the superfund Act.

Comprehensive Environmental Response Compensation and Liability Information System (CERCLIS): EPA has a list of suspected uncontrolled or abandoned hazardous waste sites that have been brought to their attention within its Superfund data base.

RCRA Generator and TSD (RCRIS): EPA maintains lists of hazardous waste generators, transporters, and disposal facilities.

RCRA Corrective Actions List (CORRACTS): EPA maintains a list of RCRA facilities which are undergoing corrective action.
Toxic Release Inventory (TRI): EPA maintains a list of facilities which have had a release of a reportable quantity of any extremely hazardous substance beyond the facility boundary.

Federal: National Response Center

Emergency Response Notification System (ERNS): National Response Center (U.S. Coast Guard) publishes a list of reported CERCLA hazardous substance releases or spills in quantities greater than the reportable quantity. Data back to 1990.

State: Nevada Division of Environmental Protection

Landfill Inventory (SWLF): NDEP maintains a list of sites permitted as solid waste landfills, incinerators, or transfer stations.
Hazardous Materials Incident Reports: Hazardous materials spills (formerly tracked by Office of Emergency Management). Data back to 1998.
Underground Storage Tanks (UST): NDEP maintains a list of registered underground storage tanks.
Listing of Sites with Releases (SCL): The Bureau of Corrective Actions maintains a list of sites with releases, including leaking underground storage tanks.

A review of the all available federal and state databases show that there is no evidence for releases of hazardous substances or petroleum products on the subject parcel. The Nevada Hazardous Materials Incident Reports show that there have been eight spills of hazardous materials within 1 mile of the subject parcel. 1) In 1989, a truck parked in a Wendover multi storage area had 350 pounds of dynamite and caps in the bed. 2) In 1990, a leaking truck pulled into the Nevada Crossing Hotel. Hydrochloric, nitric, sulfuric acid, and some heavy metals were spilled. 3) In 1993, a truck overturned at the 410 exit and spilled 20 to 40 gallons of diesel. 4) In 1997, 30 gallons of trichloroethane were spilled from a truck in the Peppermill Inn parking lot. A "clean up" company from Utah cleaned up the spill. 5) In 1998, at the intersection of Wendover Boulevard and State Route 459 a tanker truck rolled over and spilled 10,000 gallons of diesel. The diesel was directed into a storm drain that empties into a dry wash. The trucking company brought in a vacuum truck and four pallets of absorbent to clean up the spill. 6&7) In 2002, during digging for expansions at the casinos, hydrocarbon contaminated soils were found at the Peppermill and Stateline Hotel/Casino properties. 8) In 2003, a truck spilled 20 to 30 gallons of diesel at the 410 exit.

The National Response Center database shows one spill within one mile of the property. In 2005, a truck spilled 60 gallons of diesel at the Wendover Truck Stop.

INTERVIEWS
No interviews were conducted in 2006.

SITE RECONNAISSANCE

The site was visited on February 7, 2006. Parcels A, B, and C are crossed by the Victory Highway. During the site visit the Victory Highway was walked across the parcels and several north/south traverses were made perpendicular to the Victory Highway across the parcels. A small dump of scattered household trash was noticed on parcel D (see photograph in Appendix B). No hazardous materials were noted in the trash scatter. There was a little scattered and windblown trash on parcels A, B, and C which mostly consisted of rusted cans and wood. Some of the trash was historic beverage cans, old highway signs and other remains of the Victory Highway.

FINDINGS AND CONCLUSIONS

A Phase I Environmental Site Assessment has been performed in conformance with the scope and limitations of ASTM Standard E-1527 on the subject property. This assessment has revealed no evidence of recognized environmental conditions in connection with this property.

BIBLIOGRAPHY

Coats, R. R., 1987, Geology of Elko County, Nevada, Nevada Bureau of Mines and Geology Bulletin 101.

Schneyer, J.D., 1990, Geologic Map of the Leppy Peak Quadrangle and Adjacent Area, Elko County Nevada and Tooele County, Utah, scale 1:24,000.

VICTORY HIGHWAY
(U.S. 40)
One Mile Segment West of West Wendover and South of Interstate 80
West Wendover vicinity
Elko County
Nevada

HAER NV-41
NV-41

HAER
NV-41

PHOTOGRAPHS

WRITTEN HISTORICAL AND DESCRIPTIVE DATA

HISTORIC AMERICAN ENGINEERING RECORD
PACIFIC WEST REGIONAL OFFICE
National Park Service
U.S. Department of the Interior
1111 Jackson Street, Suite 700
Oakland, CA 94607

HISTORIC AMERICAN ENGINEERING RECORD

VICTORY HIGHWAY
(U.S. 40)

HAER No. NV-41

Location:	The highway commences at a point 0.75 mile west of the West Wendover, Nevada, exit for Interstate 80 and runs northwest for approximately 1.06 miles to the current right-of-way boundary for Interstate 80.
Quad:	Wendover, Nevada
UTMS:	11/747376/4514051 (east end) 11/745932/4514178 (west end)
Date of Construction:	1925
Present Owner:	Bureau of Land Management, Elko Field Office
Present Use:	Abandoned; partial demolition planned
Significance:	This segment of the Victory Highway is significant because it is an extant part of the first transcontinental highway to be completed across Nevada. It also is significant for its associations with the western interstate battles concerning highway routes during the early years of federal aid to states for road construction in the 1910s and 1920s.
Historian:	Steven F. Mehls, Ph.D., research assistants Mary Ringhoff and Robert Peterson, Western Cultural Resource Management, December 2006

I. HISTORY

The portion of the Victory Highway examined here represents only a small part of a longer coast-to-coast highway system. The project's backers announced the highway plan as the popularity of named highways peaked during the early twentieth century. Various organizations had designated over 250 named roads by 1920. The Victory Highway held that moniker only a few years before most of it became U.S. Highway 40. The history of this portion of the Victory Highway dates to the latter 1910s, as Utah politicians and residents selected a route west from Salt Lake City to be the one in their state to receive federal assistance under the new highway aid program. That decision led to a major interstate political drama that embroiled the Victory route during the early1920s.

During 1912, automotive industry leaders and others showed an interest in developing coast-to-coast highways. By the early 1910s, as more and more Americans bought cars, pioneering motorists had experienced a myriad of frustrations in their attempts to travel from the Atlantic to the Pacific. The innumerable problems the drivers encountered along the way included everything from a lack of directions and signs to impassable mud and dirt roads. Motorists and industry leaders recognized that such conditions needed correction. To accomplish that task they founded dozens of organizations that supported the construction and improvement of highways in the United States. These private organizations channeled public opinion to support highway improvements. Politicians, aware of public sentiment, added their voices in support of building new automobile highways and roads.

Some years earlier, Nevada's turn-of-the-century political leaders showed a keen interest in highway improvement programs. Nevada's governor, R.K. Colcord, urged the state legislature to enact a program of highway improvements in 1895, signaling the beginning of a long struggle to better the state's highway system. From 1895 until Governor Taskar Oddie took office, the plight of the highways fell on deaf ears. In 1910, Governor Oddie conducted his election campaign from a car, touring across Nevada and in the process emphasizing the automobile's expanding presence in the state.[1] Oddie's auto campaign proved successful; he won the election. The new governor used his inaugural address as a platform to berate Nevada's road system. He went on to suggest that the state was losing significant amounts of tourist income because of its poor highways. The Nevada legislature heard the message and responded to the governor's call, passing a law that authorized the use of convict labor to build roads and appropriating $20,000 to get the road-building program going. In Nevada, unlike other western states, the use of convict labor failed to meet the goals of the building program

and within a short time the state stopped the use of convicts for road building. Instead, the state hired regular workers for road projects.

Foreshadowing the future trend of roads crossing the entire state, in 1911, the legislature established a Nevada State Highway, to run from a point east of Ely on the Nevada-Utah state line west through Eureka, Austin, Fallon, and then into Reno and on to California. This route later became U.S. Highway 50. Similar to many of the early western highway projects, Nevada's legislators found it much easier to establish grand highways than to find the monies for construction. The Nevada State Highway proved to be one such case. When state monies could not be found, the legislature established a program that allowed the counties on the highway to sell bonds to pay for the construction and undertake the work themselves. The counties also lacked the necessary funds to carry out the program; as a result, the Nevada State Highway remained only a paper road in 1912 and 1913.[2]

As Governor Oddie and the Nevada legislature struggled with highway financing plans for the Silver State, the various highway associations spent time identifying routes and searching for private funding to build their projects. The highway associations understood that the endeavors they contemplated lay beyond the financial means and in some case the technical capabilities of the individual states, counties, or cities along the routes under consideration. Henry Joy and Carl Fisher, two automotive industry leaders of the period, promoted the founding of the Lincoln Highway Association and its proposed coast-to-coast highway, the Lincoln Highway.[3] This group is mentioned in this study of the Victory Highway because of their active promotion of an east-west highway across Nevada. Also, they would become one side of the late 1910s and early 1920s political struggle that embroiled the Victory Highway, the states of Nevada and Utah, and the U.S. Department of Agriculture. Moreover, Joy and Fisher serve as examples of the recruitment practices of the highway associations, who looked for members who could contribute monies of their own, or funds from their companies, or were well connected to other potential donors.

In 1913, Lincoln Highway supporters worked on perfecting the route and on the financial issues. That same year, a group of Indianapolis businessmen and motor enthusiasts, the Hoosier Motor Club, convinced Carl Fisher, then vice president of the Lincoln Highway Association, to sponsor their annual trip to the Pacific coast. Their proposed route crossed Nevada from Ely west to Reno before it went on to California. Ely businessman Gael S. Hoag, deeply involved in the Nevada good roads movement and a frequent adviser to the governor about highway matters, took it upon himself to escort

the group from western Utah into Ely.[4] They followed a route that became part of the Lincoln Highway. Hoag went on to become a field secretary for the Lincoln Highway Association and a prominent figure in the political battles that swirled around the Victory Highway during the 1920s. Governor Oddie, aware of the publicity of the trip and what it might mean for Nevada, accompanied the entourage across the state west from Ely. The governor and the general warm reception the group received in Nevada demonstrated the state's enthusiasm for a transcontinental highway.[5]

The Lincoln Highway Association presented their route to the National Conference of Governors during August 1913. The Utah portion went generally west and southwest from Salt Lake City. The proposed road crossed Tooele County and then to Ibapah, Utah, minimizing the mud flat crossings associated with the Great Salt Lake Desert. The Association's endorsed route entered Nevada northeast of Ely, proceeded through Ely, and then went west to Eureka, Austin, Fallon, and beyond. The route followed nearly all of the Nevada State Highway discussed previously.[6] Nevada, like many other states, had an official proclamation and dedication of the proposed highway following the association's 1913 announcement.[7] The state soon found it much easier to proclaim a highway than to build it. In the exuberance of the moment, the Nevada legislature allocated $25,000 for the highway. However, the state provided no additional funding in 1914.[8] The Lincoln Highway Association, as well as the other private highway organizations, recognized that many states would be hard pressed to fund such ambitious road projects. In Utah, the Lincoln Highway Association encountered other obstacles and began studying possible ways to improve the route, especially across the desert. The final Utah routing was not agreed to until 1918, and then it would prove not to be as final as its backers thought.[9]

During the five years that elapsed between the initial Lincoln Highway route announcement and the final agreements with the state of Utah, the American highway scene experienced a number of changes, including passage of the Federal Highway Act in 1916. This was the first law to provide federal matching funds to states to support road building. Participation hinged on the states establishing highway commissions and departments charge with directing and managing programs. The next year, Nevada's legislature established the Nevada Highway Department with an appointed a three-member highway commission to oversee it. Federal funding boosted Nevada's highway program, but the new commission highlighted the state's sectional problems regarding highways. The Lincoln Highway route announcement had sparked tensions that continued to grow as different parts of the Silver State demanded attention to their road needs. Nevada governor Emmet Boyle, elected in 1915, found himself besieged with

pleas from across the state. The pleas sought to influence Boyle's appointments to the new commission, and, in turn use the friendly appointments to influence highway expenditures. The governor's correspondence files for 1916 and especially 1917 are filled with letters of recommendation, letters of interest, letters of endorsement, and other statements supporting one candidate or another for the highway commission. The governor espoused a policy of no favoritism. Instead, Boyle sought candidates to represent the needs of the entire state rather than any single section or interest group.[10]

The 1910s witnessed the emergence of many private highway interest groups. The Overland Highway (Overland Trail Highway), the Pikes Peak Ocean to Ocean, and Midland Trail associations stand out as the more vocal and significant ones for the future of Nevada highways by the late 1910s (Figure 1). Founded in 1917 by Lovelock, Nevada businessmen, the Overland Highway Association, approached the leaders and merchants of towns along the Southern Pacific (old Central Pacific) Railroad across northern Nevada, including Elko, Wells, Winnemucca, and Reno. These communities recognized the value of the proposed highway and, in turn, joined and supported the northern Nevada highway proposal. The Overland group allied itself with the Pikes Peak Ocean to Ocean Highway Association and that group selected the Overland route as their western extension. The Overland group also hoped that the state, through the new Nevada Highway Commission, would select a northern route along the traditional Humboldt Corridor, as the primary recipient of federal aid in the Silver State. The Humboldt River and lands nearby had served as a travel corridor across northern Nevada for nearly a century by the time the highway planners of the early twentieth century began their efforts to attract a highway across the region. Mountain men, fur trappers, and traders, beginning with Peter Skene Ogden during 1828, traversed the corridor for less than twenty years when they found themselves being supplanted by settlers and gold rushers on the way to California John Bidwell led the Bidwell-Bartleson Party across what soon became the California Trail in 1841. Four years later Lansford W. Hastings and John C. Frémont guided hundreds of pioneers to California. The floodgates opened following the discovery of gold in California with estimates running as high as more than 70,000 emigrants following the California Trail in 1849 and 1850. The stream of wagons across the region continued until after gold and silver discoveries in Nevada led to travelers following the Humboldt River corridor heading for different destinations. After the Civil War the Central Pacific and later Western Pacific railroads followed a variation of the corridor across northern Nevada. This popularity, the line of cities and towns along the rail lines, and the general public knowledge of the route all helped add to the sense that the corridor constituted a natural route for a highway.[11]

The Tonopah-Goldfield-Rhyolite area, championing the Midland Trail route, argued why it was important for the governor to recognize the needs of their section in his commission appointment deliberations. The Midland Trail route went southwest from Ely to Tonopah, Goldfield, and then west into California before turning south to reach Los Angeles. The Lincoln Highway/central route supporters also hoped they could influence the governor's appointments to the new commission.[12] Clearly, Governor Boyle faced a very divisive and complicated situation in 1917 regarding the new highway commission.

The Nevada Highway Commission became a reality when the governor appointed three members in April 1917. James M. Leonard, George K. Elder, and W.B. Alexander served as the first highway commissioners and they immediately faced the issue of highway designations. The panel set about establishing the routes in Nevada to be designated state highways. Highways the commission established included the Overland Highway, the Lincoln Highway, and routes in southern Nevada, doing what they could to satisfy the various parts of the state.[13]

The political situation in Utah proved to be equally complicated. The impacts of route changes in Nevada's neighbor to the east spilled over into the Silver State and Nevadans could do nothing about that. Utah endorsed the Lincoln Highway route with minor modifications when it was first announced in 1913.[14] In 1918, as Utah prepared to build the proposed highway, Governor William Bamberger reaffirmed support for the Lincoln Highway route. Reflecting this attitude, Utah's highway commission negotiated a contract with the Lincoln Highway Association to build the road.[15] While the state government continued supporting the Lincoln route, opposition developed among Salt Lake City businessmen. They started a publicity campaign for a highway planned to run west from Salt Lake City to Wendover on the Nevada-Utah state line, approximately paralleling the Western Pacific Railroad. From the state line, the highway would and the Pikes Peak Ocean to Ocean Highway. By 1918 the winds of change were beginning to sweep across the western highway scene and continue west across northern Nevada along a route very similar to the one proposed by the Overland Trail Highway Association. To further confuse the situation, other Utahans began a campaign to build a route that went south from Salt Lake City through Utah before turning west and connecting to southern California. This route went under many names, including the Arrowhead Trail. Another who sought to weaken the Lincoln Highway's position was William Spry, Utah's former governor, who earlier had endorsed the road.[16]

Despite the rising tide of opposition to more construction on the Lincoln Highway in Utah, the state continued to honor its contract with the Lincoln Highway Association through 1918 and into 1919. However, by the end of the summer of 1919, Utah suspended work on the road. Governor Bamberger told the Lincoln Highway Association that the state was out of money for the project and that further work was impossible until the construction equipment underwent heavy repairs.[17] This marked the beginning of a protracted struggle between supporters of the other roads and the Lincoln Highway group over the route in Utah.

While Salt Lake City business and highway interests became more vocal in their support for the route west to Wendover, Ely merchants and businessmen, who supported the Lincoln route, responded by staging a boycott of all Salt Lake City businesses. Ely and its copper mines traditionally had close commercial connections to Salt Lake City. The boycott ended without a resolution to the Lincoln Highway question.[18] Other Silver State supporters of the Lincoln Highway bombarded the governor's office to pressure Utah to back to the highway construction project.[19] No resolution to the situation was in sight as the decade of the 1910s ended.

During 1920 and 1921, a new player emerged on the scene, the Victory Highway Association. This organization absorbed the Overland Trail Highway group and held its organizational meeting in Elko, Nevada, one of the communities most likely to benefit from the northern route across Nevada. Associated with the Pikes Peak Ocean to Ocean Highway, the Overland Trail, was part of the shortest route from the Atlantic to the Pacific, and by absorbing this route Victory Highway enjoyed the shortest route between the coasts. The Victory Highway Association supported construction of a route west from Salt Lake City to Wendover.[20] The proposed route roughly followed the Hastings Cutoff of the California Trail discussed above. Lansford Hastings pioneered the route by for emigrants in 1846. The cutoff fell into disuse after the 1840s Donner disaster in California. The route remained neglected until 1907, when the Western Pacific Railroad opened its line from California to Salt Lake City. The Victory Highway route followed the trans-Mississippi River practice of the proposed highways paralleling rail lines. The exception to this pattern near, but west of the current study area, was the short piece of the proposed highway route from Oasis to Wells, Nevada. In much of the rest of Elko County, roadway selected early on by the highway commission for State Route 1, and later the Victory Highway, was the abandoned railbed of the Southern Pacific Railroad.[21] Nevada State Route 1, like the Nevada State Highway, was a paper route waiting form funding and boosters to get it built.

At the same time, Congress began debating amendments to the 1916 Federal Highway Act. One of the provisions included in the new bill would increase the level of federal funding for states that suffered from a small tax base due to federal ownership of lands; a provision that would benefit Nevada. The Silver State's senatorial delegation of former Governor Oddie and Key Pittman supported the bill because it provided the increased funding that would help Nevada and established a true federal highway system.[22] The bill passed, giving further impetus for Utah and Nevada to sort out the Victory - Lincoln Highway situation.

The debate as to which route would be designated the primary federal highway from Salt Lake City to California persisted into the early 1920s. Both sides continued to argue their case in the press and in front of governors, highway commissions, and state legislatures. The role played by the northern California communities eventually became obvious. They hoped for a route directly west from Salt Lake City, fearing that any other route would make it too easy for tourists and travelers to divert southwest toward southern California.[23] Nevadans continued to look at alternatives that would be in their best interest, both in the potential number of travelers and cost of construction. While the debate swirled, the Silver State continued to proclaim the Lincoln route to be its primary highway. Nevada's clearly stated position did not lead to resolution of the stalemate with Utah.

The common interests of Salt Lake City and San Francisco kept supporters of the Lincoln Highway at bay in Utah. Nevertheless, Lincoln Highway backers continued to bring pressure on the decision makers to try to force completion of the road across Utah. The efforts proved ineffectual because in 1921 Utah improved 40 miles of the Victory Highway west toward Wendover and at the same time neglected maintenance on the Lincoln road. Despite spring flooding that destroyed much of the newly built Victory Highway across the Salt Lake Desert, Utah selected the Victory Highway between Salt Lake City and Wendover as its official federal highway and recipient of government aid as required by the Federal Highway Act of 1921.[24] This move led to rejoicing in northern Nevada while it angered people in other parts of the state. Further, the Utah decision prompted the Lincoln Highway Association to take the issue to the United States Secretary of Agriculture, Henry C. Wallace. During the 1910s and 1920s, the Bureau of Public Roads was part of the Department of Agriculture and reported to the Secretary.

Preparing for the Secretarial hearings, set for May 14, 1923, supporters for both sides assembled extensive documentation, such as the book-length study, *A Brief for the Lincoln Highway in Utah and Nevada*, authored by the Lincoln Highway Association.

When the day of the hearing arrived, nearly 100 witnesses descended on the Department of Agriculture to present their case. Utah governor Charles Maybey, ex-Governor Spry, and employees of the Utah Highway Commission presented the Victory Highway case. Lincoln Highway officials, including Nevada's Gael Hoag, then the organization's field secretary, presented their case. The secretary listened intently throughout the day as the respective sides made their points. At the end of the day, Wallace deferred his decision. He informed everyone present that he would consider the matter and offer his opinion within a few weeks after he had the opportunity to pour over the written materials he had been given, including numerous letters that had bombarded his office in support of one highway or the other. Wallace endorsed the Wendover/Victory Highway on June 6, 1923. This move relegated the Lincoln Highway to a secondary position in Nevada and to abandonment in Utah.[25] Setting aside the politics of the highway situation, both routes had points in their favor as well as points that detracted from their desirability. For example, the mileage from Salt Lake City to Reno on the two routes differed by approximately 50 miles with the Victory Highway being shorter. The Victory Highway could take advantage of the abandoned Central Pacific rail grade for part of its route and had the advantage of towns along its route as well as rail connections to bring in construction supplies. The route also had fewer and easier mountain crossings that would be an advantage during construction and operation of the Victory Highway. On the other hand Ely and the large population supported by the copper mines in the area as well as towns like Eureka west of Ely offset some of that Victory Highway advantages. Secretary Wallace no doubted weighed all these factors in his decision making process.

The Secretary's decision cleared the way for construction of the Victory Highway west from Wendover across northern Nevada. Construction moved ahead in Utah on the Wendover Cutoff of the Victory Highway that opened during June 1925.[26]

The Nevada Highway News constitutes the best available source to track the Victory Highway's construction progress. According to that publication, the highway engineers completed plans for the 20.8 mile route from Wendover west to Silver Zone Summit in 1924.[27] The engineers determined that gravel would be sufficient to surface this section of the highway. The highway department opened construction bids for this segment on April 8, 1925.[28] Sumison and Clyde won the contract and commenced construction during the week of April 13.[29] The contract called for the builders to complete the road by June 1, 1925.[30] The highway department pushed the completion date back to November 1 and changed the contractor to C.A. Robinson.[31] The road appears to have been finished by this deadline because it disappeared from the table of ongoing projects after November 1, 1925. Construction of the highway continued for

another two years before the road opened across all of Elko County. Completion of the road across the rest of the state required two more years. The road included graveled, oiled, and paved sections. The section of the Victory Highway currently under study was initially graveled[32] and remained so until 1932, when the highway department authorized oiling of the road.[33]

Interestingly, as Nevada worked to complete the segment of the Victory Highway that is the focus of this study, new federal highway legislation included a plan to eliminate named highways, substituting a set of standardized numbers. During the summer and into the fall of 1925, highway commissions, highway engineers, and federal officials worked out plans for the numbering system. The Bureau of Public Roads approved the numbering scheme in November 1925. The Victory Highway in the study area became U.S. 40 during this numbering process. The plan also called for use of standardized signs across the nation. To help implement the plan, state highway departments removed all named highway markers to avoid confusion. By 1928, the standard federal shield highway markers had all but replaced the older Victory, Lincoln, Ocean to Ocean, and other highway signs.[34]

The Victory Highway opened in the area under study during late 1925 and across the rest of the Silver State by the end of 1927. A few years later, in 1932, the highway department oiled the graveled road in the study area. Later in the decade, the state planned for further improvements to the highway that led to the 1940 road widening from 15 to 24 feet and resurfacing with plant mix asphalt (Figure 2). The next year, the Nevada Highway Department began a program to reduce grades and lessen curves on U.S. Highway 40. World War II interrupted the program and the segment of the Victory Highway under study here was not replaced until 1948. In the present project area the 1948 realignment moved U.S. 40 slightly south from the original alignment to the current route of Wendover Boulevard. The new road eventually was ultimately superceded by Interstate 80.[35]

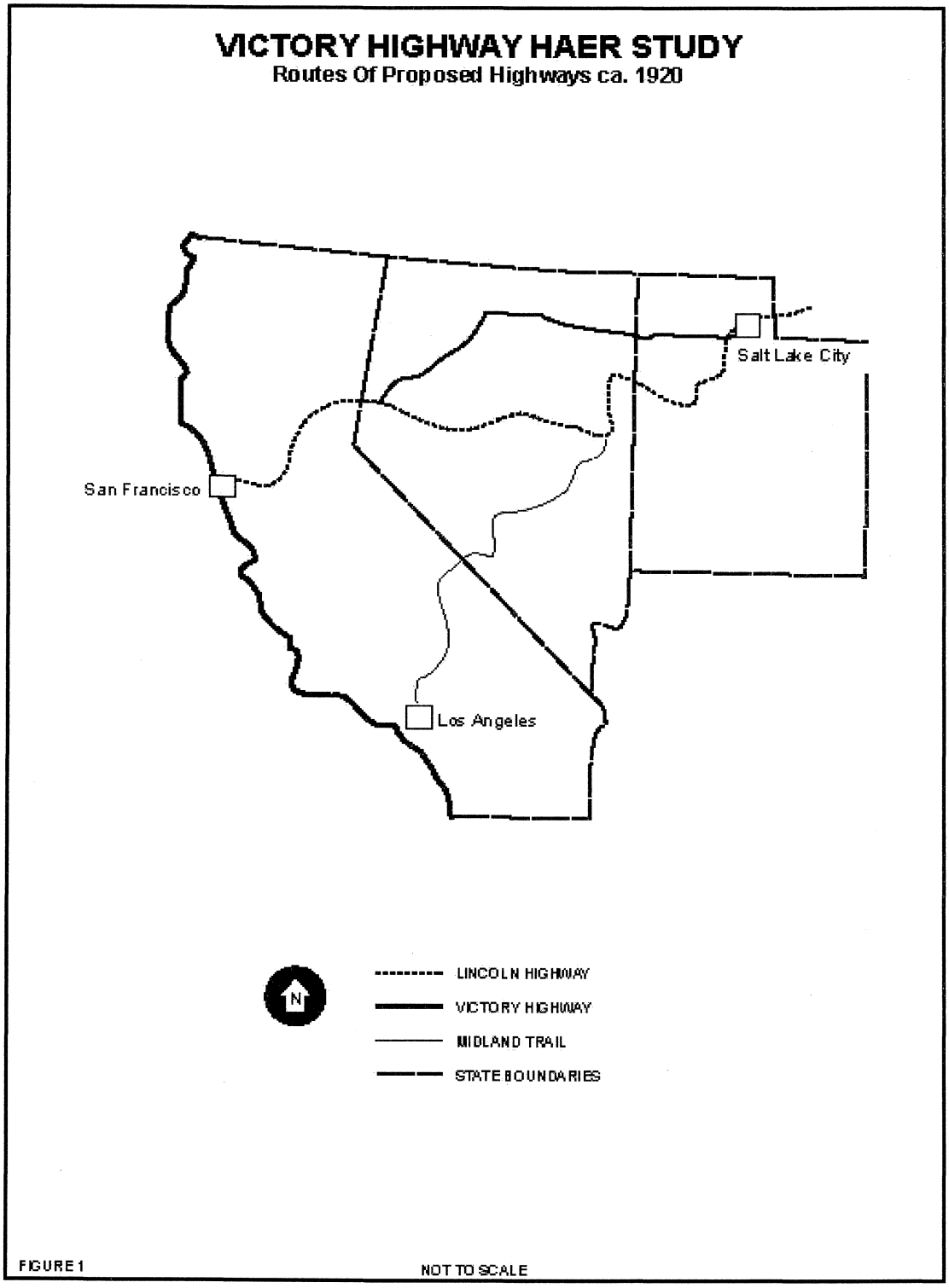
VICTORY HIGHWAY HAER STUDY
Routes Of Proposed Highways ca. 1920
Salt Lake City
San Francisco
Los Angeles
N
LINCOLN HIGHWAY
VICTORY HIGHWAY
MIDLAND TRAIL
STATE BOUNDARIES
FIGURE 1
NOT TO SCALE

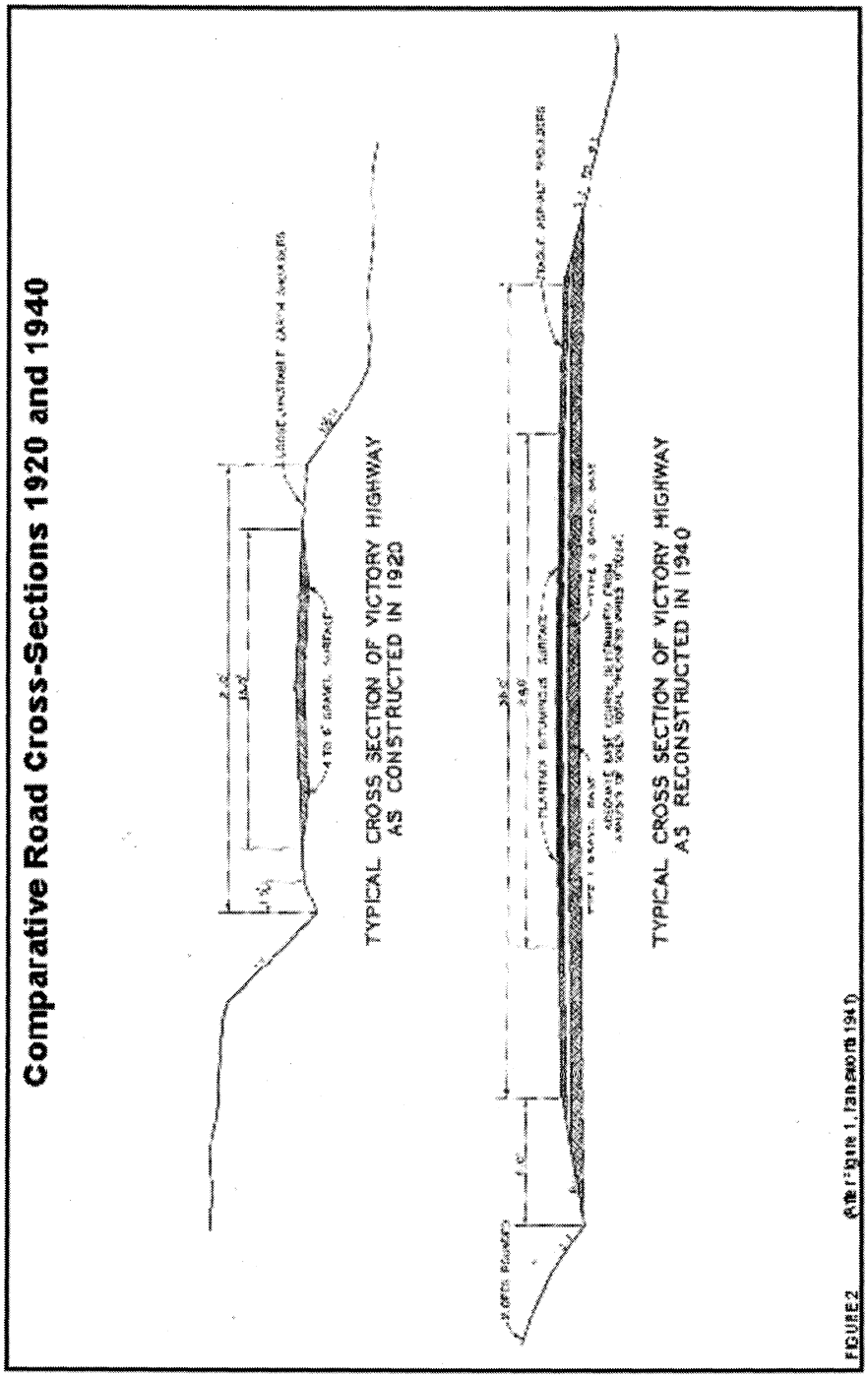

From Anonymous, *Twelfth Biennial Report of the Department of Highways.*

II. DESCRIPTION

A General Description

The site under discussion in this Historic American Engineering Record report is a short section of the Victory Highway/ U.S. Highway 40 located on the west side of West Wendover in Elko County, Nevada. The highway segment is 1.06 miles (5,597 feet) in length and the road surface is generally 18 feet wide. This is a deviation from the 1925 and 1940 design widths and likely is the result of erosion and partial demolition of the roadway when the culverts were removed. The resource includes the highway roadbed, road surface, nine culverts, seven sets of billboard or sign remains, one concrete (mile marker?) post, and a general artifact scatter. The features are described individually below.

The highway builders used simple construction methods in this section of the Victory Highway. The graded roadbed is made of native soils and rock that construction crews obtained from borrow ditches that parallel parts of the highway. Detailed construction specifications are not available for this section of the road. From field observation it appears that the builders formed the roadbed by scraping the native surface, moving the materials to build up the roadbed, and then spreading and compacting the borrowed materials to form the graded roadbed. The builders capped the roadbed with gravel and the asphalt placed on top of the gravel. The height of the roadbed generally varies from approximately 1.5 to more than 4 feet above the native ground surface. The higher roadbed occurs where builders filled ephemeral drainages and channeled water through culverts. Borrow ditches are irregular in width and depth. In places the ditches have almost disappeared due to nearly six decades of abandonment. The remaining paved surface is composed of bituminous asphalt with remnants of hot tar repairs. The asphalt layer varies from 2.5 to 4 inches thick, based on profile exposures where culverts have been removed. Recorders saw no evidence of the earlier gravel or oiled gravel road surfaces in the profiles. The asphalt is thinner at the edges of the highway than in the center. Currently, the road surface is cracked and in a state of general disrepair. Weeds are growing through the pavement in many places, as seen in the setting photographs completed as part of this study. In some places, the weeds grow only through the centerline of the roadway, indicating a gap of some sort between the two lanes, probably from the construction methods.

B. Feature Descriptions

The following descriptions and numbers were adapted from the 2006 site recording completed by Teresa L. Dixon, Danielle Storey, and Tim Murphy of the Bureau of Land Management, Elko Field Office and observations made at the time of this HAER recording. These numbers bear no relation to any historic designations that may have been given to the culverts or other features by the Nevada Highway Department. The feature numbers correspond to locations on Figure 3. Features 1 through 9 are the culverts, the other features are the remains of signs or markers that stood along the Victory Highway when it was in use.

Feature 1
Feature 1 is the remains of a washed-out culvert. The roadbed was more than 4 feet above the natural surface at this point and the washed-out area is approximately 3 feet wide. There are no extant structural remains of this culvert.

Feature 2
Feature 2 is the remains of a removed culvert. The roadbed was approximately 3 feet above the natural surface at this point. Smooth-faced coursed rubble stones that represent the remains of the culvert faces were observed on both the northern and southern sides of the roadway at Feature 2.

Feature 3
Feature 3 is the remains of a removed culvert. The roadbed was approximately 2.5 feet above the natural surface at this point. Smooth-faced coursed rubble stones that represent the remains of the culvert faces were observed on the southern side of the roadway at Feature 3. Cement fragments associated with the culvert were observed on the northern side of the roadway. This indicates that the culvert was constructed using stone with cement mortar.

Feature 4
Feature 4 is the remains of a removed culvert. The roadbed was approximately 2.5 feet above the natural surface at this point. Smooth-faced coursed rubble stones were observed on both the northern and southern sides of the roadway at Feature 4. The stones indicate that the culvert had smooth coursed rubble facings. Scattered stones remain on the southern side of the roadway, while only a single stone from the culvert is left on the northern side of the grade.

Feature 5
Feature 5 is the remains of a removed culvert. The roadbed was approximately 3.5 feet above the natural surface at this point. A coursed stone and other debris lie on the ground at the northern end of the culvert. The stone measures 29 x 15 x 6 inches. A scatter of stones and debris remains on the southern side of the roadway at Feature 5. Also present at the feature is a concrete and stone fragment that retains an impression of the piping used for the culvert.

Feature 6
Feature 6 is the remains of a culvert that was removed by ripping up the asphalt road surface. The roadbed was approximately 3.5 feet above the natural surface at this point. Smooth-faced coursed rubble stones remain at both the northern and southern ends of the culvert, indicating that the culvert had coursed rubble facings. The southern end of the culvert also has concrete debris, offering further evidence of the use of concrete in the construction of the culverts. The stone at the northern end of the culvert is partially buried and there is a considerable amount of what appears to be modern gravel on the southern side.

Feature 7
Feature 7 is the remains of a removed culvert. The roadbed was approximately 3 feet above the natural surface at this point. The feature includes concrete and stone debris that retain the impression of the corrugated pipe used for the internal portion of the culvert. The debris is found on both sides of the roadway and in the area once occupied by the culvert. The remaining facing stones appear to be imported materials and may have been used to ensure consistency or as an expedient solution because the stone was on hand and required no further quarrying.

Feature 8
Feature 8 is a paired culvert, made of two parallel corrugated metal pipes with common facings on both the northern and southern ends. The roadbed was approximately 4 feet above the natural surface at this point. The culvert facings are made of coursed rubble and concrete. The southern face is 108 inches long with two courses exposed. The northern face is 114 inches long with two courses exposed. The culvert pipes are estimated to have a diameter of 19 inches and the culvert has an approximate length of 50 feet. The southern face indicates that historically one or more courses were present above the two remaining courses

based on the presence of mortar on the top of the extant upper course. In comparison the Lincoln Highway south of Wendover has culvert facings of uncoursed stone or concrete. The stonework on the Lincoln Highway shows a lower level of craftsmanship than those of the Victory Highway recorded during this study.

Feature 9
Feature 9 is another stone-faced metal-pipe culvert. The roadbed was approximately 4 feet above the natural surface at this point. The northern and southern facings are made of smooth-faced coursed rubble and concrete and were at least two courses high when built. The southern face is approximately 55 inches long with one course exposed. The northern face is 54 inches long with two courses exposed. The pipe is 19 inches in diameter and the culvert is approximately 52 feet long. The feature shows extensive evidence of soil erosion.

Feature 10
Feature 10 is the ruin of a sign or billboard that once stood beside the highway. All that remains is a short wooden post that leans to the east. The post appears to have been cut off when the sign was removed.

Feature 11
Feature 11 is the remains of a billboard. It includes five short wooden posts that lean to the east, and scattered wood debris that may have been part of the sign face or superstructure. The posts appear to have been cut off when the sign was removed.

Feature 12
Feature 12 is the remains of a billboard made of wood and metal. No base for the sign was observed. The debris includes red-painted metal panels with the word "LODGE" in uppercase, white lettering edged with black, and more than 50 pieces of weathered lumber.

Feature 13
Feature 13 is the remains of a metal sign. The metal was painted, but the paint has faded. What could be made out was a smiling head wearing a yellow-tinted turban. The face had a thin black moustache. No posts or other debris are associated with this feature.

Feature 14
Feature 14 is collection of wooden debris on the ground that represents the remains of a sign.

Feature 15
Feature 15 is a small concrete post that has been painted white and may have been lettered at one time. It is approximately 4 x 4 inches square and 4 feet tall, with a rounded top. It is located some 100 feet south of the roadbed, near the edge of the highway right-of-way. It may have been milepost or a post to mark the edge of the right-of-way. As it would have been impossible to read from the road, given its location and narrow profile, it is unlikely that is served as a mile marker.

Feature 16
Feature 16 is the remains of a billboard. The feature includes two short wooden posts that lean to the east and a light scatter of wood debris. The posts appear to have been cut off when the sign was removed.

Feature 17
Feature 17 is the remains of a billboard denoted by two short wooden posts. The posts appear to have been cut off when the sign was removed. No debris related to the sign was observed.

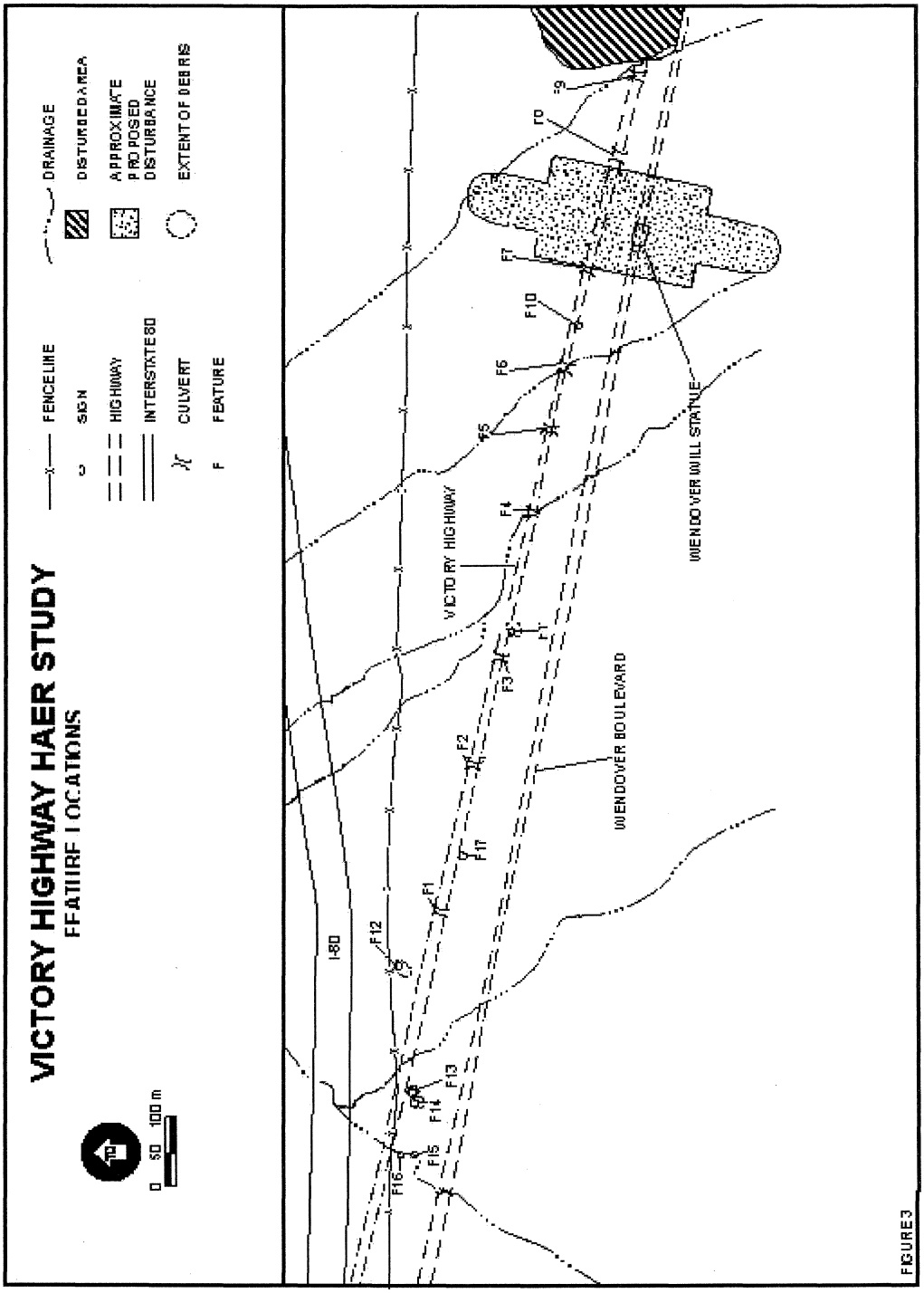
VICTORY HIGHWAY HAER STUDY
FEATURE LOCATIONS
FENCELINE
DRAINAGE
SIGN
DISTURBED AREA
HIGHWAY
APPROXIMATE PROPOSED DISTURBANCE
INTERSTATE 80
CULVERT
EXTENT OF DEBRIS
FEATURE
0 50 100 m
I-80
VICTORY HIGHWAY
WENDOVER BOULEVARD
WENDOVER WILL STATUE
F1
F2
F3
F4
F5
F6
F7
F8
F9
F10
F11
F12
F13
F14
F15
F16
FIGURE 3

III. ENDNOTES

1. Elliot, Russell R., *History of Nevada*, (Lincoln: University of Nebraska Press, 1973), p. 265.

2. Fey, Christine A., "A Preservation Plan for the Lincoln Highway in Nevada," (Master's Thesis, University of Nevada-Reno, 1991), pp. 23-4., hereafter cited: Fey, "Plan."

3. Hokanson, Drake, *The Lincoln Highway, Main Street Across America*, (Iowa City: University of Iowa Press, 1988), pp. 2-5., hereafter cited: Hokanson, *Lincoln.*

4. Givens, W. Earl, "A Nevada View of the Lincoln Highway," *The Lincoln Highway Forum* 3 (Winter 1996): 5, hereafter cited: Givens, "View", and Gael Hoag to T.L. Oddie, various dates, 1913, Oddie Collection, Nevada State Historical Society, Reno, Nevada., hereafter cited: Oddie, NHS.

5. Givens, "View," p. 5.

6. Givens, "View," p. 6, Fey, "Plan," p. 25, and The Lincoln Highway Association, *A Brief for the Lincoln Highway in Utah and Nevada Addressed to the Secretary of Agriculture, Washington, D.C., A Study of Western Road Strategy Designed to Aid in Determining the Road of Most Immediate Importance Connecting Salt Lake City, Utah, With California*, (Detroit: The Lincoln Highway Association, 1923), pp. 26, 42, 69-72., hereafter cited: LHA, *Brief.*

7. "The Lincoln Highway Proclamation," Book of Proclamations, Nevada State Archives, Carson City, Nevada.

8. Fey, "Plan," p. 26.

9. LHA, *Brief*, pp. 26-7.

10. Copy to Boyle of I.H. Kent to G.S. Hoag 14 March 1917, P.M. McCarran to E. D. Boyle 17 March 1917, John Henderson to E.D. Boyle 19 March 1917, Telegram E.D. Boyle to I.H. Kent 16 March 1917, GOV-0016,

GOV-0020, Records of the Governors' Office, Nevada State Archives, Carson City, Nevada., hereafter cited: Governors, NSA.

11. Weingroff, Richard F., "The Pikes Peak Ocean to Ocean Highway, the Appian Way of America," http://www.fhwa.dot.gov/infrastructure/pikes.htm, accessed 27 November 27 2006., hereafter cited: Weinghoff, 2006. The National Park Service also has completed extensive studies on the California Trail.

12. For example see: J.T. Goodwin to E.D. Boyle 22 March, J.W. Lockman to E.D. Boyle 31 March 1917, GOV-0020, Governors, NSA., and Weingroff, 2006.

13. C. L. Howard to E.D. Boyle 26 April 1917, E.D. Boyle to C.D. Wittenburg 16 April 1917, GOV-0020, Governors, NSA.

14. LHA, *Brief*, p. 25.

15. LHA, *Brief*, pp. 25-7.

16. Hokanson, *Lincoln*, pp. 79-80, LHA, *Brief*, p. 33, "Facts About the Lincoln Highway Route Across Nevada," flyer, 3 February 1917, copy in E.D. Boyle papers, GOV-0019, Governors, NSA.

17. LHA, *Brief*, pp. 33-4., Hokanson, *Lincoln*, p. 80.

18. Hokanson, *Lincoln*, p. 80, Fey, "Plan," p. 31, and The Lincoln Highway Association, *The Lincoln Highway: The Story of a Crusade that Made Transportation History*, (New York: Dodd, Mead, 1935), p. 176, hereafter cited: LHA, *Crusade*.

19. Various dates, E.D. Boyle correspondence files, GOV-0020, GOV-0021, Governors, NSA.

20. Fey, "Plan," p. 32, and Hokanson, *Lincoln*, p. 99.

21. Stewart, George R., *U.S. 40: Cross Section of the United States of America*, (Boston: Houghton-Mifflin Company, 1953), pp. 22, 235-6; Anonymous, *Biennial Report of the Department of Highways*, (Carson City: State Printing Office, 1921), p. 91; and Weinghoff, 2006.

22. Numerous examples of the correspondence are discussed in Mehls, Steven F., Historic American Engineering Record, Lincoln Highway, HAER-NV-28, 1999, copy on file at the Library of Congress and available online at http://memory.loc.gov.

23. LHA, *Brief*, pp. 50, 59.

24. Fey, "Plan," pp. 33-4, and Hokanson, *Lincoln*, p. 99.

25. LHA, *Brief*, Fey, "Plan," pp. 33., and Hokanson, *Lincoln*, pp. 99-102.

26. Camp, T. Allan, Historic American Engineering Record, Lincoln Highway Wendover Cutoff, HAER-UT-23, 1971, copy on file at the Library of Congress and available online at http://memory.loc.gov.

27. Leonard, James M., "Over the Victory Highway," *The Nevada Highway News*, Nevada State Highway Department, vol.4, #24 (24 November 1924): 3-4.

28. Anonymous, *The Nevada Highway News*, Nevada State Highway Department, vol.5, #7 (30 March 1925): 13.

29. Anonymous, *The Nevada Highway News*, Nevada State Highway Dcpartmcnt, vol.5, #8 (13 April 1925): 9.

30. Anonymous, *The Nevada Highway News*, Nevada State Highway Department, vol.5, #10 (11 May 1925): 13.

31. Anonymous, *The Nevada Highway News*, Nevada State Highway Department, vol.5, #11 (25 May 1925): 12.

32. Anonymous, *Fifth Biennial Report of the Department of Highways*, (Carson City: State Printing Office, 1927), pp. 1, 9, and Anonymous, *Sixth Biennial Report of the Department of Highways*, (Carson City: State Printing Office, 1929), p. 15, 19-21.

33. Anonymous, *Eighth Biennial Report of the Department of Highways*, (Carson City: State Printing Office, 1932), fold-out map.

34. Weingroff, Richard F. "From Names to Numbers: The Origins of the U.S. Numbered Highway System." http://www.fhwa.dot.gov/infrastructure/numbers.htm, accessed 21 November 2006.

35. Dixon, Teresa L., Wendover R&PP, Cultural Resource Report BLM1-2516(P), Bureau of Land Management, Elko, NV, Field Office, 2006, p. 30, and Anonymous, *Twelfth Biennial Report of the Department of Highways,* (Carson City: State Printing Office, 1941), p. 40.

IV. BIBLIOGRAPHY

A. MANUSCRIPT COLLECTIONS

Carson City, Nevada. Nevada State Archives. Book of Proclamations.

Carson City, Nevada. Nevada State Archives. Records of the Governors' Office.

Reno, Nevada. Nevada State Historical Society. Taskar L. Oddie Collection.

B. BOOKS

Elliot, Russell R. *History of Nevada.* Lincoln: University of Nebraska Press, 1973.

Hokanson, Drake. *The Lincoln Highway, Main Street Across America.* Iowa City: University of Iowa Press, 1988.

The Lincoln Highway Association. *A Brief for the Lincoln Highway in Utah and Nevada Addressed to the Secretary of Agriculture, Washington, D.C., A Study of Western Road Strategy Designed to Aid in Determining the Road of Most Immediate Importance Connecting Salt Lake City, Utah, With California.* Detroit: The Lincoln Highway Association, 1923.

____ . *The Lincoln Highway: The Story of a Crusade that Made Transportation History.* New York: Dodd, Mead, 1935.

Stewart, George R. *U.S. 40: Cross Section of the United States of America.* Boston: Houghton-Mifflin Company, 1953.

C. PERIODICALS

Givens, W. Earl. "A Nevada View of the Lincoln Highway." *The Lincoln Highway Forum* 3 (Winter 1996).

Peterson, Jesse. "The Utah Gap." *The Lincoln Highway Forum* 4 (Fall 1996).

D. GOVERNMENT DOCUMENTS

Anonymous. *Biennial Report of the Department of Highways.* Carson City: State Printing Office, 1921.

Anonymous. *Fifth Biennial Report of the Department of Highways.* Carson City: State Printing Office, 1927.

Anonymous. *Sixth Biennial Report of the Department of Highways.* Carson City: State Printing Office, 1929.

Anonymous. *Eighth Biennial Report of the Department of Highways.* Carson City: State Printing Office, 1932.

Anonymous. *Twelfth Biennial Report of the Department of Highways.* Carson City: State Printing Office, 1941.

Anonymous. *The Nevada Highway News*. Nevada State Highway Department. vol.5 (1925).

Camp, T. Allan. Historic American Engineering Record, Lincoln Highway Wendover Cutoff, UT–HAER-UT-23. 1971. Copy on file at the Library of Congress and available online at http://memory.loc.gov.

Dixon, Teresa L. Wendover R&PP, Cultural Resource Report BLM 1-2516(P). Bureau of Land Management. Elko, NV, Field Office. 2006.

Leonard, James M. "Over the Victory Highway." *The Nevada Highway News*. Nevada State Highway Department. vol.4 #24 (24 November 1924): 3-4.

Mehls, Steven F. Historic American Engineering Record, Lincoln Highway HAER-NV-28, 1999, copy on file at the Library of Congress and available on line at http://memory.loc.gov.

Weingroff, Richard F. "The Pikes Peak Ocean to Ocean Highway, the Appian Way of America." http://www.fhwa.dot.gov/infrastructure/pikes.htm. Accessed November 27, 2006.

Weingroff, Richard F. "From Names to Numbers: The Origins of the U.S. Numbered Highway System." http://www.fhwa.dot.gov/infrastructure/numbers.htm. Accessed 21 November 2006.

E. THESES

Fey, Christine A. "A Preservation Plan for the Lincoln Highway in Nevada." Master's Thesis. University of Nevada-Reno, 1991.

HISTORIC AMERICAN ENGINEERING RECORD

INDEX TO PHOTOGRAPHS

VICTORY HIGHWAY HAER NV-41
(U.S. 40)
One Mile Segment West of West Wendover and South of Interstate 80
West Wendover vicinity
Elko County
Nevada

INDEX TO BLACK AND WHITE PHOTOGRAPHS

Dr Frederic J Athearn, photographer, October 2006

NV-41-1	Overview of highway and setting to west at west end of the study area
NV-41-2	Overview of highway and setting to east at west end of the study area
NV-41-3	Overview of highway and setting to west at east end of the study area
NV-41-4	Overview of highway and setting to west near east end of the study area
NV-41-5	Overview of highway and setting to west at Feature 3
NV-41-6	Overview of highway and setting to west near Feature 7
NV-41-7	Overview of highway and setting to east near Feature 2
NV-41-8	Overview of highway and setting to west near Feature 5
NV-41-9	Overview of highway and setting to east near Feature 5
NV-41-10	Detail of pavement at the east end of the study area to west
NV-41-11	Feature 1, washed out culvert north end to south
NV-41-12	Feature 2, removed culvert south end to northwest

NV-41-13	Feature 2, removed culvert north end to south: stones from removed culvert
NV-41-14	Feature 3, removed culvert south end to north
NV-41-15	Feature 4, removed culvert north end to southwest; only one stone remains
NV-41-16	Feature 5, removed culvert north end to southwest
NV-41-17	Feature 6, removed culvert north end to south very little showing due to vegetation
NV-41-18	Feature 7, removed culvert south end to northwest
NV-41-19	Feature 8, paired culvert south end to north
NV-41-20	Feature 8, paired culvert north end to south
NV-41-21	Feature 9, single culvert south end to west-northwest; culvert partially buried
NV-41-22	Feature 9, single culvert north end to south
NV-41-23	Feature 10, post from removed sign to northeast
NV-41-24	Feature 11, posts and debris from removed sign to northwest
NV-41-25	Feature 12, posts, painted panel and debris from removed sign to southwest
NV-41-26	Feature 12, debris from removed sign to south
NV-41-27	Feature 12, debris from removed metal sign to southwest
NV-41-28	Feature 14, wood debris from removed sign to southwest
NV-41-29	Feature 15, concrete post considered to be possible highway mile post to southwest
NV-41-30	Feature 16, posts and debris from removed sign to southwest
NV-41-31	Feature 17, posts from removed sign to northeast



NV 41-1



NV 41-2



NV 41-3



NV 41-4



NV 41-5



NV 41-6



NV 41-7



NV 41-8



NV 41-9



NV 41-10



NV 41-11



NV 41-12



NV 41-13



NV 41-14



NV 41-15



NV 41-16



NV 41-17



NV 41-18



NV 41-19



NV 41-20



NV 41-21



NV 41-22



NV 41-23



NV 41-24



NV 41-25



NV 41-26



NV 41-27



NV 41-28



NV 41-29



NV 41-30



NV 41-31

Attachment K

Noise Abatement and Control

Documents included:

- Solicitation Letter to Raul Naranjo, City of West Wendover Public Works Director; Dated: January19, 2023.
- Signed Response from Raul Naranjo, City of West Wendover Public Works Director; Dated January 23, 2023.

January 19, 2023

Raul Naranjo
Public Works Director
Public Works Department
P.O. Box 2825
West Wendover, Nevada 89883

Transmitted Electronically

Attention: Mr. Naranjo,

Re: Environmental Review – City of West Wendover – Fire Station #13: Noise Abatement and Control

The City of West Wendover is applying for funds through the Nevada Community Development Block Grant Program (CDBG), and the United States Department of Agriculture – Rural Development, to undertake the following project: City of West Wendover – Fire Station #13. Enclosed is a description of the proposed action, project drawings and maps and a form for your review of the project.

Thank you for your assistance on this Environmental Review. Please do not hesitate to contact me if you need any information on the proposed action. My contact information is found at the bottom of the review form. Please feel free to e-mail your response to: shay.stark@aquaeng.com.

Sincerely,

Shay Stark
Project Manager

Enclosures: Project Description
Project Drawings and Maps
Environmental Review Form

ENVIRONMENTAL REVIEW: HUD STANDARDS FOR NOISE ABATEMENT AND CONTROL

Grantee: City of West Wendover Project Name: Fire Station #13

Pursuant to Department of Housing and Urban Development requirements for CDBG projects, the grant recipient assumes the responsibility for environmental review, decision making and actions required by local, state and federal environmental laws or authorities. In order to complete the environmental review requirements, we are requesting your review of the project with respect to the threshold for the Noise Abatement and Control Standards. The pertinent HUD standards for these environmental considerations include the following criteria, standards, policies and/or regulations:

1. 24CFR Part 51, Environmental Criteria and Standards, Subpart A, General Provision; and Subpart B, Noise Abatement and Control (44 FR 40860-40866, July 12, 1979).

Please check either line A or B below and add any applicable comments in the space provided. Please feel free to attach any additional comments.

____ A. The project does not involve development of noise sensitive uses, or the ambient noise level at the project site is 65LDN (or CNEL) or less. This finding may be based on calculations using the HUD Noise Assessment Guidelines (1980), or other acoustical data.

____ B. The project exceeds the thresholds stated in A above. Apply the noise standard to the project approval decision and consider the application of the noise attenuation measures (Noise Assessment Guidelines, Pages 39-40).

Comments:

_____

Signature/Title Date

Please address reply to:

Shay Stark
AQUA Engineering
533 West 2600 South, Suite 275
Bountiful Utah 84010

Phone: 801-299-1327 ext. 3731
Email: shay.stark@aquaeng.com

January 19, 2023

Raul Naranjo
Public Works Director
Public Works Department
P.O. Box 2825
West Wendover, Nevada 89883

Transmitted Electronically

Attention: Mr. Naranjo,

Re: Environmental Review – City of West Wendover – Fire Station #13: Noise Abatement and Control

The City of West Wendover is applying for funds through the Nevada Community Development Block Grant Program (CDBG), and the United States Department of Agriculture – Rural Development, to undertake the following project: City of West Wendover – Fire Station #13. Enclosed is a description of the proposed action, project drawings and maps and a form for your review of the project.

Thank you for your assistance on this Environmental Review. Please do not hesitate to contact me if you need any information on the proposed action. My contact information is found at the bottom of the review form. Please feel free to e-mail your response to: shay.stark@aquaeng.com.

Sincerely,

Shay Stark
Project Manager

Enclosures: Project Description
Project Drawings and Maps
Environmental Review Form

ENVIRONMENTAL REVIEW: HUD STANDARDS FOR NOISE ABATEMENT AND CONTROL

Grantee: City of West Wendover Project Name: Fire Station #13

Pursuant to Department of Housing and Urban Development requirements for CDBG projects, the grant recipient assumes the responsibility for environmental review, decision making and actions required by local, state and federal environmental laws or authorities. In order to complete the environmental review requirements, we are requesting your review of the project with respect to the threshold for the Noise Abatement and Control Standards. The pertinent HUD standards for these environmental considerations include the following criteria, standards, policies and/or regulations:

1. 24CFR Part 51, Environmental Criteria and Standards, Subpart A, General Provision; and Subpart B, Noise Abatement and Control (44 FR 40860-40866, July 12, 1979).

Please check either line A or B below and add any applicable comments in the space provided. Please feel free to attach any additional comments.

X A. The project does not involve development of noise sensitive uses, or the ambient noise level at the project site is 65LDN (or CNEL) or less. This finding may be based on calculations using the HUD Noise Assessment Guidelines (1980), or other acoustical data.

____ B. The project exceeds the thresholds stated in A above. Apply the noise standard to the project approval decision and consider the application of the noise attenuation measures (Noise Assessment Guidelines, Pages 39-40).

Comments:

RON T 0 Public Works Diretor

Signature/Title Date

Please address reply to:

Shay Stark
AQUA Engineering
533 West 2600 South, Suite 275
Bountiful Utah 84010

Phone: 801-299-1327 ext. 3731
Email: shay.stark@aquaeng.com

Attachment L

Safe Drinking Water Act/Sole Source Aquifers

Documents included:

- Solicitation Letter to Brendon Grant, P.E. Engineering Branch Supervisor, Bureau of Safe Drinking Water Nevada Division of Environmental Protection; Dated: January 19, 2023.
- Signed Response from Brendon Grant, P.E. Engineering Branch Supervisor, Bureau of Safe Drinking Water Nevada Division of Environmental Protection; Dated March 20, 2023.

January 19, 2023

Brendon Grant
Supervisor, Professional Engineer
Nevada Division of Environmental Protection
Bureau of Safe Drinking Water
901 S Stewart Street, Ste. 4001
Carson City, Nevada 89701-5249

Transmitted Electronically

Attention: Mr. Grant

Re: Environmental Review – City of West Wendover – Fire Station #13: Safe Drinking Water Act/Sole Source Aquifers

The City of West Wendover is applying for funds through the Nevada Community Development Block Grant Program (CDBG), and the United States Department of Agriculture – Rural Development, to undertake the following project: City of West Wendover – Fire Station #13. Enclosed is a description of the proposed action, project drawings and maps and a form for your review of the project.

Thank you for your assistance on this Environmental Review. Please do not hesitate to contact me if you need any information on the proposed action. My contact information is found at the bottom of the review form. Please feel free to e-mail your response to: shay.stark@aquaeng.com.

Sincerely,



Shay Stark
Project Manager

Enclosures: Project Description
Project Drawings and Maps
Environmental Review Form

ENVIRONMENTAL REVIEW: SAFE DRINKING WATER ACT/
SOLE SOURCE AQUIFERS

Grantee: City of West Wendover Project Name: Fire Station #13

Pursuant to Department of Housing and Urban Development requirements for CDBG projects, the grant recipient assumes the responsibility for environmental review, decision making and actions required by local, state and federal environmental laws or authorities. In order to complete the environmental review requirements, we are requesting you review of the project with respect to the threshold for Sole Source Aquifers and Safe Drinking Water Standards. The pertinent HUD standards for Sole Source Aquifers and Safe Drinking Water include the following criteria, standards, policies and/or regulations:

1. The Safe Drinking Water Act of 1974 (P.L. 93-253) as amended by the safe Drinking Water Amendments of 1977 (P.L. 95-190, 42 U.S.C. 201, 300 f et seq., 7401 et seq.) and by further amendments in 1979 (P.L. 97-163) and further amendments in 1986 (P.L. 99-339 6/19/86).

2. Section 1424 of the Safe Drinking Water Act of 1974 (P.L. 93-253) as amended, which provides for the protection of aquifers which are a sole or principal source of drinking water, and which if contaminated would create a significant health hazard.

Please check the line below which applies and add any applicable comments in the space provided. Please feel free to attach any additional comments.

____ A. The project is not located within an area designated by EPA as being supported by a sole source aquifer, OR,

____ A.1 The project need not be referred to EPA for evaluation according to the HUD-EPA Region IX Sole Source Aquifer Memorandum of Understanding of 1990, or
EPA has determined that it is not contaminated and does have the potential of being contaminated and the applicable authority has determined that it meets the State drinking water standards.

____ B. The environmental threshold for the Sole Source Aquifer criteria is exceeded. Consult with the applicable authority for resolution assistance, or

____ B.1 The environmental threshold for the Safe Drinking Water Act is exceeded, the grant recipient must consult the applicable authority for resolution assistance.

SAFE DRINKING WATER ACT/SOLE SOURCE AQUIFERS

Please complete the following review by checking the appropriate line(s). Please feel free to attach any additional comments:

1. Will the proposed project be served by a public water system as defined in Nevada Administrative Code 445?
   ___ YES - If "yes", go on to question #2
   ___ NO - If "no", go on to question #3
   ___ NOT APPLICABLE - If "not applicable" go on to question #3

2. Is the public water system in violation of any section of Nevada Administrative Code (NAC) 445A.450 to 445A.6731?
   ___ YES - If "yes", explain and go on to question #3

   Explanation:

   ___ NO - If "no", go on to question #3

3. Could the proposed project contaminate an existing public water system?
   ___ YES - If "yes", go on to question #4
   ___ NO - If "no", go on to question #5
4. Contamination could be:
   ___ to sources (springs, wells, reservoirs, etc.)
   ___ by creating an excessive demand on the system
   ___ by causing a cross-connection
   ___ other, explain
5. Is the answer "yes" to question #2 or question #3?
   ___ NO - REVIEW COMPLETED
   ___ YES - consult the Nevada Division of Environmental Protection, Bureau of Safe Drinking Water for resolution assistance.

Comments:

_____

Signature, Title
Nevada Division of Environmental Protection
Bureau of Safe Drinking Water

Date

Please address reply to

Shay Stark
AQUA Engineering
533 West 2600 South, Suite 275
Bountiful Utah 84010

Phone: 801-299-1327 ext. 3731
Email: shay.stark@aquaeng.com

NEVADA DIVISION OF
ENVIRONMENTAL
PROTECTION

STATE OF NEVADA
Department of Conservation & Natural Resources
Joe Lombardo, *Governor*
James A. Settelmeyer, *Director*
Jennifer Carr, *Administrator*

March 20, 2023

Shay Stark
AQUA Engineering
533 West 2600 South, Suite 275
Bountiful, Utah 84010
shay.stark@aquaeng.com

RE: ENVIRONMENTAL REVIEW: SOLE SOURCE AQUIFER QUESTIONNAIRE FOR A COMMUNITY DEVELOPMENT BLOCK GRANT TO CONSTRUCT FIRE STATION #13 IN THE CITY OF WEST WENDOVER
In reply, please refer to plan review number (EL-0007119-23)

Ms. Stark,

The Bureau of Safe Drinking Water (BSDW) has performed the above-referenced Environmental Review. Please find the completed review questionnaires attached with this document.

If you have any questions or comments, please feel free to contact me at (775) 687-9524 or at bgrant@ndep.nv.gov.

Sincerely,

Brendon Grant, P.E.
Engineering Branch Supervisor
Bureau of Safe Drinking Water

attachments

ec: Andrea Seifert, P.E., Chief, BSDW aseifert@ndep.nv.gov
Jason Hettrick, Engineering Tech, BSDW jlhettrick@ndep.nv.gov
Chris Melville, West Wendover Water System cmelville@westwendovercity.com

ENVIRONMENTAL REVIEW: SAFE DRINKING WATER ACT/
SOLE SOURCE AQUIFERS

Grantee: City of West Wendover Project Name: Fire Station #13

Pursuant to Department of Housing and Urban Development requirements for CDBG projects, the grant recipient assumes the responsibility for environmental review, decision making and actions required by local, state and federal environmental laws or authorities. In order to complete the environmental review requirements, we are requesting you review of the project with respect to the threshold for Sole Source Aquifers and Safe Drinking Water Standards. The pertinent HUD standards for Sole Source Aquifers and Safe Drinking Water include the following criteria, standards, policies and/or regulations:

1. The Safe Drinking Water Act of 1974 (P.L. 93-253) as amended by the safe Drinking Water Amendments of 1977 (P.L. 95-190, 42 U.S.C. 201, 300 f et seq., 7401 et seq.) and by further amendments in 1979 (P.L. 97-163) and further amendments in 1986 (P.L. 99-339 6/19/86).

2. Section 1424 of the Safe Drinking Water Act of 1974 (P.L. 93-253) as amended, which provides for the protection of aquifers which are a sole or principal source of drinking water, and which if contaminated would create a significant health hazard.

Please check the line below which applies and add any applicable comments in the space provided. Please feel free to attach any additional comments.

X A. The project is not located within an area designated by EPA as being supported by a sole source aquifer, OR,

____ A.1 The project need not be referred to EPA for evaluation according to the HUD-EPA Region IX Sole Source Aquifer Memorandum of Understanding of 1990, or
EPA has determined that it is not contaminated and does have the potential of being contaminated and the applicable authority has determined that it meets the State drinking water standards.

____ B. The environmental threshold for the Sole Source Aquifer criteria is exceeded. Consult with the applicable authority for resolution assistance, or

____ B.1 The environmental threshold for the Safe Drinking Water Act is exceeded, the grant recipient must consult the applicable authority for resolution assistance.

SAFE DRINKING WATER ACT/SOLE SOURCE AQUIFERS

Please complete the following review by checking the appropriate line(s). Please feel free to attach any additional comments:

1. Will the proposed project be served by a public water system as defined in Nevada Administrative Code 445?
   - [X] YES - If "yes", go on to question #2
   - [ ] NO - If "no", go on to question #3
   - [ ] NOT APPLICABLE - If "not applicable" go on to question #3

2. Is the public water system in violation of any section of Nevada Administrative Code (NAC) 445A.450 to 445A.6731?
   - [ ] YES - If "yes", explain and go on to question #3

   Explanation:

   - [X] NO - If "no", go on to question #3

3. Could the proposed project contaminate an existing public water system?
   - [X] YES - If "yes", go on to question #4
   - [ ] NO - If "no", go on to question #5

4. Contamination could be:
   - [ ] to sources (springs, wells, reservoirs, etc.)
   - [X] by creating an excessive demand on the system
   - [X] by causing a cross-connection
   - [ ] other, explain

5. Is the answer "yes" to question #2 or question #3?
   - [ ] NO - REVIEW COMPLETED
   - [X] YES - consult the Nevada Division of Environmental Protection, Bureau of Safe Drinking Water for resolution assistance.

Comments:

The BSDW is unable to determine if a water project was submitted for review and approval prior to construction in 2007. The BSDW requests as-builts of the construction, a network hydraulic analysis that demonstrates fire flow and fire demand can be met at the fire hydrant, and a standard detail that shows the installation of a reduced pressure principle assembly on the water service, fire service, and irrigation lines.

Brendon M., Engineering Branch Supervisor
Signature, Title
Nevada Division of Environmental Protection
Bureau of Safe Drinking Water

Date 3-20-23
Please address reply to

Shay Stark
AQUA Engineering
533 West 2600 South, Suite 275
Bountiful Utah 84010

Phone: 801-299-1327 ext. 3731
Email: shay.stark@aquaeng.com

Attachment M

Wetlands Protection

Documents included:

- Solicitation Letter to Zack Carter, Environmental Scientist III, Department of Conservation & Natural Resources, Nevada Division of Environmental Protection; Dated: January 19, 2023.
- Signed Response from Zack Carter, Environmental Scientist III, Department of Conservation & Natural Resources, Nevada Division of Environmental Protection; Dated February 13, 2023.

January 19, 2023

Zack Carter, Environmental Scientist 3
Department of Conservation and Natural Resources
Nevada Division of Environmental Protection
901 S. Stewart, St. 4001
Carson City, Nevada 89701-5249

Transmitted Electronically

Attention: Mr. Carter,

Re: Environmental Review – City of West Wendover – Fire Station #13: Wetlands Protection

The City of West Wendover is applying for funds through the Nevada Community Development Block Grant Program (CDBG), and the United States Department of Agriculture – Rural Development, to undertake the following project: City of West Wendover – Fire Station #13. Enclosed is a description of the proposed action, project drawings and maps and a form for your review of the project.

Thank you for your assistance on this Environmental Review. Please do not hesitate to contact me if you need any information on the proposed action. My contact information is found at the bottom of the review form. Please feel free to e-mail your response to: shay.stark@aquaeng.com.

Sincerely,

Shay Stark
Project Manager

Enclosures: Project Description
Project Drawings and Maps
Environmental Review Form

ENVIRONMENTAL REVIEW: WETLANDS PROTECTION

Grantee: City of West Wendover Project Name: Fire Station #13

Pursuant to Department of Housing and Urban Development requirements for CDBG projects, the grant recipient assumes the responsibility for environmental review, decision making and actions required by local, state and federal environmental laws or authorities. In order to complete the environmental review requirements, we are requesting your review of the project with respect to the threshold for Protection of Wetlands. The pertinent HUD standards for Wetlands Protection include the following criteria, standards, policies and/or regulations:

1. Executive Order 11988, Floodplain Management, May 24, 1977 (42 FR 26961 et seq.); particularly sections 2 and 5.

2. Executive Order 11990, Protection of Wetlands, May 24, 1977 (42-FR 26961 et seq.); particularly Sections 2 and 5.

Please check either line A or B below and add any applicable comments in the space provided. Please feel free to attach any additional comments.

____ A. The project does not involve new construction within or adjacent to a wetland. The project does not affect a wetland identified by any pertinent planning document or by field observation. The delineation of wetlands is based on consultation with U.S. Corps of Engineers, U.S. Fish & Game Service or State Fish & Game.

____ B. The environmental threshold for Wetlands Protection is exceeded. Grant recipient must initiate and complete the U.S. Water Resources Council's 8-step process for Floodplain Management. (Projects may be approved if there is no practicable alternative outside the wetland area; however, the activity must comply with permitting requirements under provision of the Clean Water Act).

Comments:

Signature/Title
Bureau of Water Quality

Date

Please address reply to:

Shay Stark
AQUA Engineering
533 West 2600 South, Suite 275
Bountiful Utah 84010

Phone: 801-299-1327 ext. 3731
Email: shay.stark@aquaeng.com

ENVIRONMENTAL REVIEW: WETLANDS PROTECTION

Grantee: City of West Wendover Project Name: Fire Station #13

Pursuant to Department of Housing and Urban Development requirements for CDBG projects, the grant recipient assumes the responsibility for environmental review, decision making and actions required by local, state and federal environmental laws or authorities. In order to complete the environmental review requirements, we are requesting your review of the project with respect to the threshold for Protection of Wetlands. The pertinent HUD standards for Wetlands Protection include the following criteria, standards, policies and/or regulations:

1. Executive Order 11988, Floodplain Management, May 24, 1977 (42 FR 26961 et seq.); particularly Sections 2 and 5.

2. Executive Order 11990, Protection of Wetlands, May 24, 1977 (42-FR 26961 et seq.); particularly Sections 2 and 5.

Please check either line A or B below and add any applicable comments in the space provided. Please feel free to attach any additional comments.

_X_ A. The project does not involve new construction within or adjacent to a wetland. The project does not affect a wetland identified by any pertinent planning document or by field observation. The delineation of wetlands is based on consultation with U.S. Corps of Engineers, U.S. Fish & Game Service or State Fish & Game.

___ B. The environmental threshold for Wetlands Protection is exceeded. Grant recipient must initiate and complete the U.S. Water Resources Council's 8-step process for Floodplain Management. (Projects may be approved if there is no practicable alternative outside the wetland area; however, the activity must comply with permitting requirements under provision of the Clean Water Act).

Comments:

The proposed construction of a fire station in West Wendover, Nevada will avoid impacts to any wetlands identified in the National Wetlands Inventory. This review is based on a desktop analysis of the proposed project site and does not constitute a formal delineation of the aquatic resources at this location. All federal, state, and local permit conditions must be followed for construction. Best management practices to prevent erosion and control sediment should be implemented to prevent discharge into all identified drainages or waterbodies.



2/13/2023

Environmental Scientist III
Bureau of Water Quality Planning

Please address reply to:

Shay Stark
AQUA Engineering
533 West 2600 South, Suite 275
Bountiful, Utah 84010
Phone: 801-299-1327 ext. 3731
Email: shay.stark@aquaeng.com

Attachment N

Wild and Scenic Rivers

Documents included:

- National Wild and Scenic Rivers Query for Nevada found at: https://www.rivers.gov/nevada.php on June 6, 2018.

AQUA - Home | Nevada

https://www.rivers.gov/nevada.php

NATIONAL WILD AND SCENIC RIVERS SYSTEM

NATIONAL SYSTEM | MANAGEMENT | RESOURCES | PUBLICATIONS | CONTACT US | 50 YEARS | SITE INDEX

NEVADA

Nevada has approximately 141,796 miles of river, but no designated wild & scenic rivers.



+ View larger map

EXPLORE DESIGNATED RIVERS



Choose A State Go

Choose A River Go

Seen as barren by the first explorers to today's first-time visitors, the rivers of the high desert simply hide their treasures well.



Type here to search

ENG US 5:22 PM 1/23/2023

Attachment O

Environmental Justice

Documents included:

- Solicitation Letter to Chris Melville, City Manager, City of West Wendover; Dated January 19, 2023.
- Signed Response from Chris Melville, City Manager, City of West Wendover; Dated January 23, 2023.

January 19, 2023

Chris Melville
Community Development Director
P.O. Box 2825
West Wendover, Nevada 89883

Transmitted Electronically

Attention: Mr. Melville,

Re: Environmental Review – City of West Wendover – Fire Station #13: Environmental Justice

The City of West Wendover is applying for funds through the Nevada Community Development Block Grant Program (CDBG), and the United States Department of Agriculture – Rural Development, to undertake the following project: City of West Wendover – Fire Station #13. Enclosed is a description of the proposed action, project drawings and maps and a form for your review of the project.

Thank you for your assistance on this Environmental Review. Please do not hesitate to contact me if you need any information on the proposed action. My contact information is found at the bottom of the review form. Please feel free to e-mail your response to: shay.stark@aquaeng.com.

Sincerely,

Shay Stark
Project Manager

Enclosures: Project Description
Project Drawings and Maps
Environmental Review Form

ENVIRONMENTAL REVIEW: ENVIRONMENTAL JUSTICE

Grantee: City of West Wendover Project Name: Fire Station #13

Pursuant to Department of Housing and Urban Development requirements for CDBG projects, the grant recipient assumes the responsibility for environmental review, decision making and actions required by local, state and federal environmental laws or authorities. In order to complete the environmental review requirements, we are requesting your review of the project with respect to environmental justice. Please complete the following table which lists 17 considerations the will help to determine the projects impacts on the human environment:

Please include a brief note explaining the determination of impact on each item.

Issue	Positive Impact	Neutral Impact	Negative Impact	Notes
Noise				
Aesthetic Values				
Community Cohesion				
Community Growth				
Tax Revenues				
Local Property Values				
Public Facilities				
Public Services				
Regional Growth				
Employment and Labor Force				
Business and Industrial Activity				
Displacement of Farms				
Manmade Resources				
Natural Resources				
Air Quality				
Water Quality				
Displacement of People				
Disadvantaged Population				

Comments:

Signature/Title

Date

Please address reply to:

Shay Stark
AQUA Engineering
533 West 2600 South, Suite 275
Bountiful Utah 84010

Phone: 801-299-1327 ext. 3731
Email: shay.stark@aquaeng.com

ENVIRONMENTAL REVIEW: ENVIRONMENTAL JUSTICE

Grantee: City of West Wendover Project Name: Fire Station #13

Pursuant to Department of Housing and Urban Development requirements for CDBG projects, the grant recipient assumes the responsibility for environmental review, decision making and actions required by local, state and federal environmental laws or authorities. In order to complete the environmental review requirements, we are requesting your review of the project with respect to environmental justice. Please complete the following table which lists 17 considerations the will help to determine the projects impacts on the human environment:

Please include a brief note explaining the determination of impact on each item.

Issue	Positive Impact	Neutral Impact	Negative Impact	Notes
Noise		X		Project location will provide no additional impact to the community related to noise.
Aesthetic Values	X			The project will provide additional aesthetic value in combination with the existing City Hall, per approved master plan
Community Cohesion	X			The proposed project will solidfy community cohesion with additional public safety resources
Community Growth	X			The proposed project and the services thereto related will sustain and contribute to community growth
Tax Revenues		X		As a public facility there are no additional tax implications
Local Property Values	X			The project will enchance adjacent property values in the area
Public Facilities	X			The project is an important public facility for the community
Public Services	X			The project improves public service availability and resources
Regional Growth	X			The project will improve regional growth capabilities via the services available in the community.
Employment and Labor Force	X			The facility will provide additional employment opportunities
Business and Industrial Activity	X			The project will improve business and industrial potential by providing enhanced services
Displacement of Farms		X		No farm areas within the community
Manmade Resources		X		Neutral impact to manmade resources
Natural Resources		X		Neutral impact to natural resources
Air Quality		X		Neutral impact to air quality
Water Quality		X		Neautral impact to water quality
Displacement of People		X		Project will not displace any persons
Disadvantaged Population	X			Project improves services to disadvantaged population

Comments:

B J Abbott, City Manager — 1-23-2023

Signature/Title — Date

Please address reply to:

Shay Stark
AQUA Engineering
533 West 2600 South, Suite 275
Bountiful Utah 84010

Phone: 801-299-1327 ext. 3731
Email: shay.stark@aquaeng.com

Attachment P

City Planning Documents

Documents included:

- City Center Master Plan; Dated 2001
- City of West Wendover – Debt Management and Capital Improvements 2015 - 2016
  Please see highlights for project references Pages 13, 21.



CASINO BOULEVARD

NEW CITY CENTER

MAIN STREET

VALENTINER GRANT

CITY OF WEST WENDOVER NEVADA / CONCEPT

0 50 100 250 500

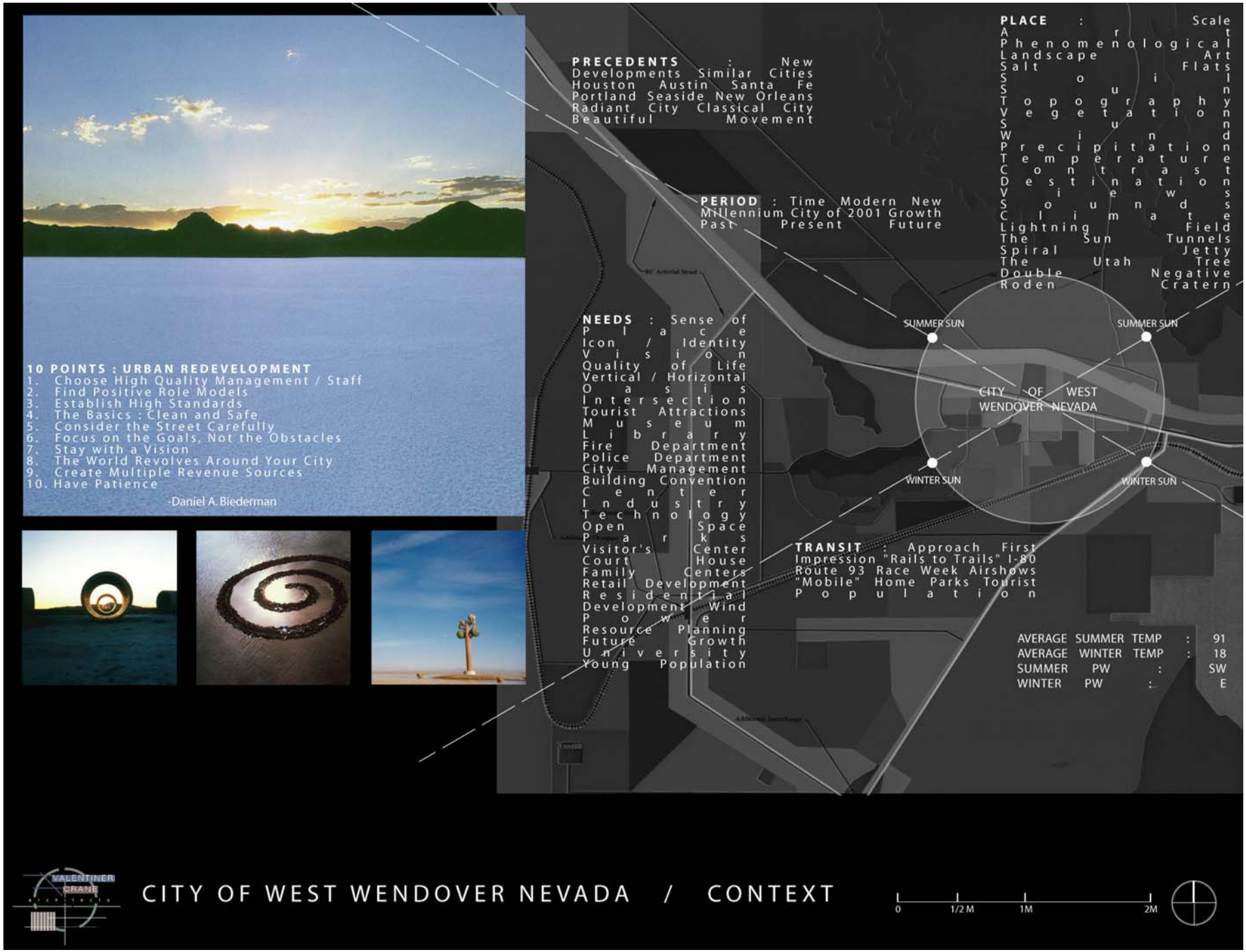
PRECEDENTS : New Developments Similar Cities
Houston Austin Santa Fe
Portland Seaside New Orleans
Radiant City Classical City
Beautiful Movement
PERIOD : Time Modern New Millennium City of 2001 Growth
Past Present Future
PLACE : Scale
Art
Phenomenological
Landscape Art
Salt Flats
Soil
Sun
Topography
Vegetation
Sun
Wind
Precipitation
Temperature
Contrast
Destination
Views
Sounds
Climate
Lightning Field
The Sun Tunnels
Spiral Jetty
The Utah Tree
Double Negative
Roden Cratern
NEEDS : Sense of Place
Icon / Identity
Vision
Quality of Life
Vertical / Horizontal
Oasis
Intersection
Tourist Attractions
Museum
Library
Fire Department
Police Department
City Management
Building Convention Center
Industry
Technology
Open Space
Parks
Visitor's Center
Court House
Family Centers
Retail Development
Residential Development
Wind Power
Resource Planning
Future Growth
University
Young Population
10 POINTS : URBAN REDEVELOPMENT
1. Choose High Quality Management / Staff
2. Find Positive Role Models
3. Establish High Standards
4. The Basics : Clean and Safe
5. Consider the Street Carefully
6. Focus on the Goals, Not the Obstacles
7. Stay with a Vision
8. The World Revolves Around Your City
9. Create Multiple Revenue Sources
10. Have Patience
-Daniel A. Biederman
SUMMER SUN
SUMMER SUN
CITY OF WEST WENDOVER NEVADA
WINTER SUN
WINTER SUN
TRANSIT : Approach First Impression "Rails to Trails" I-80 Route 93 Race Week Airshows "Mobile" Home Parks Tourist Population
AVERAGE SUMMER TEMP : 91
AVERAGE WINTER TEMP : 18
SUMMER PW : SW
WINTER PW : E
VALENTINER CRANE
CITY OF WEST WENDOVER NEVADA / CONTEXT
0
1/2 M
1M
2M

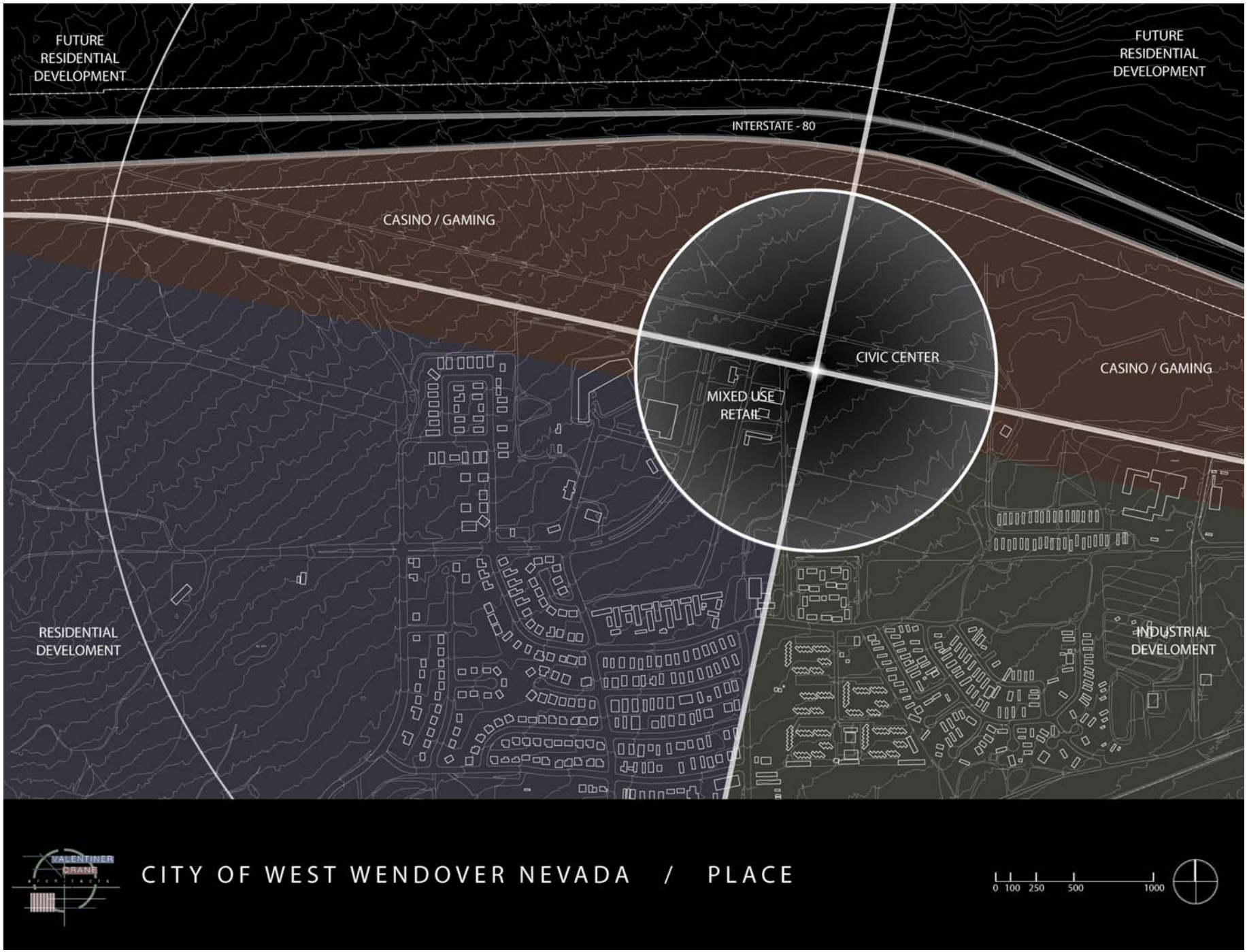
FUTURE
RESIDENTIAL
DEVELOPMENT
FUTURE
RESIDENTIAL
DEVELOPMENT
INTERSTATE - 80
CASINO / GAMING
CIVIC CENTER
CASINO / GAMING
MIXED USE
RETAIL
RESIDENTIAL
DEVELOMENT
INDUSTRIAL
DEVELOMENT
VALENTINER
CRANE
CITY OF WEST WENDOVER NEVADA / PLACE
0 100 250 500 1000

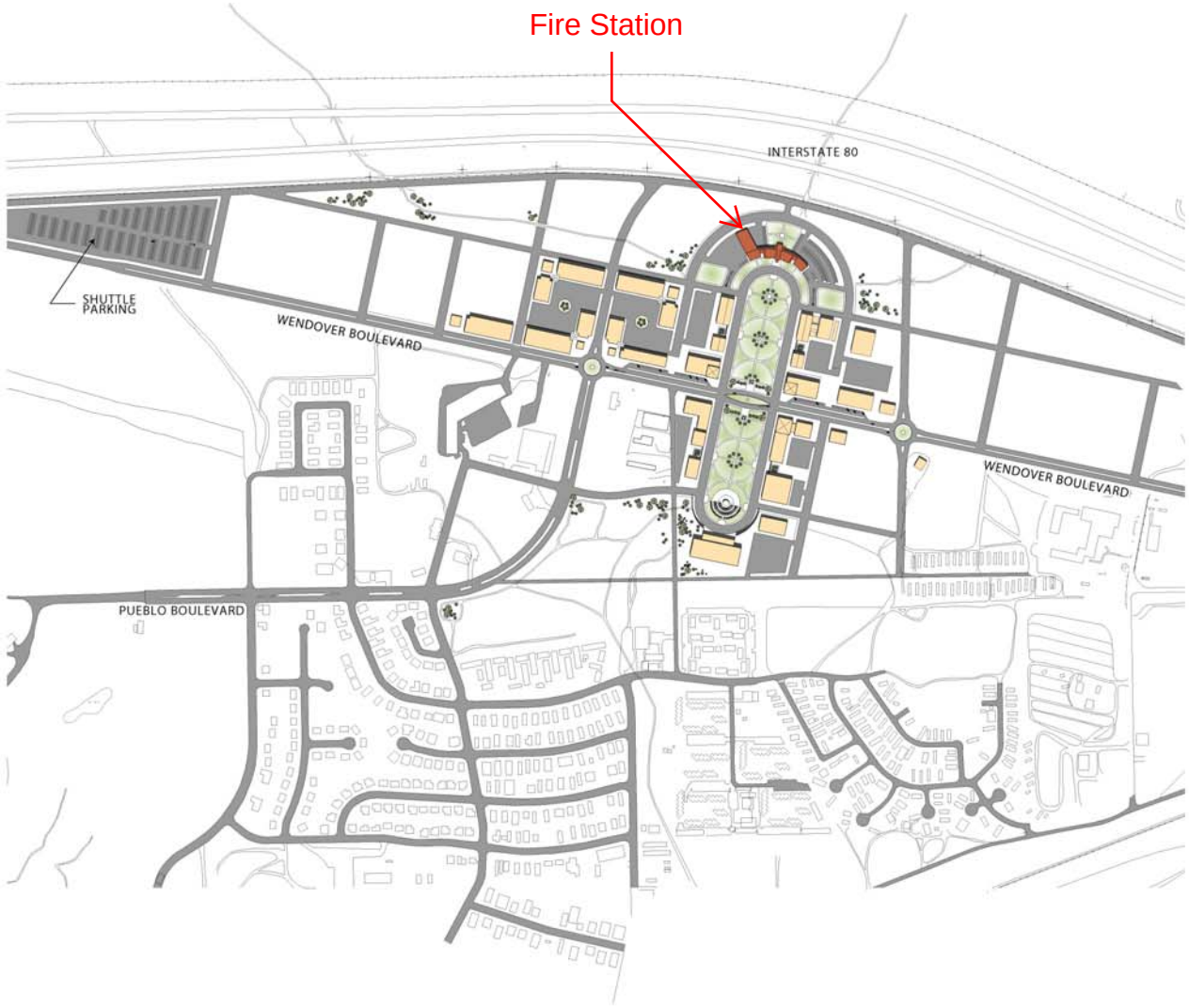

vicinity map

CITY OF WEST WENDOVER
WENDOVER, NEVADA

Fire Station

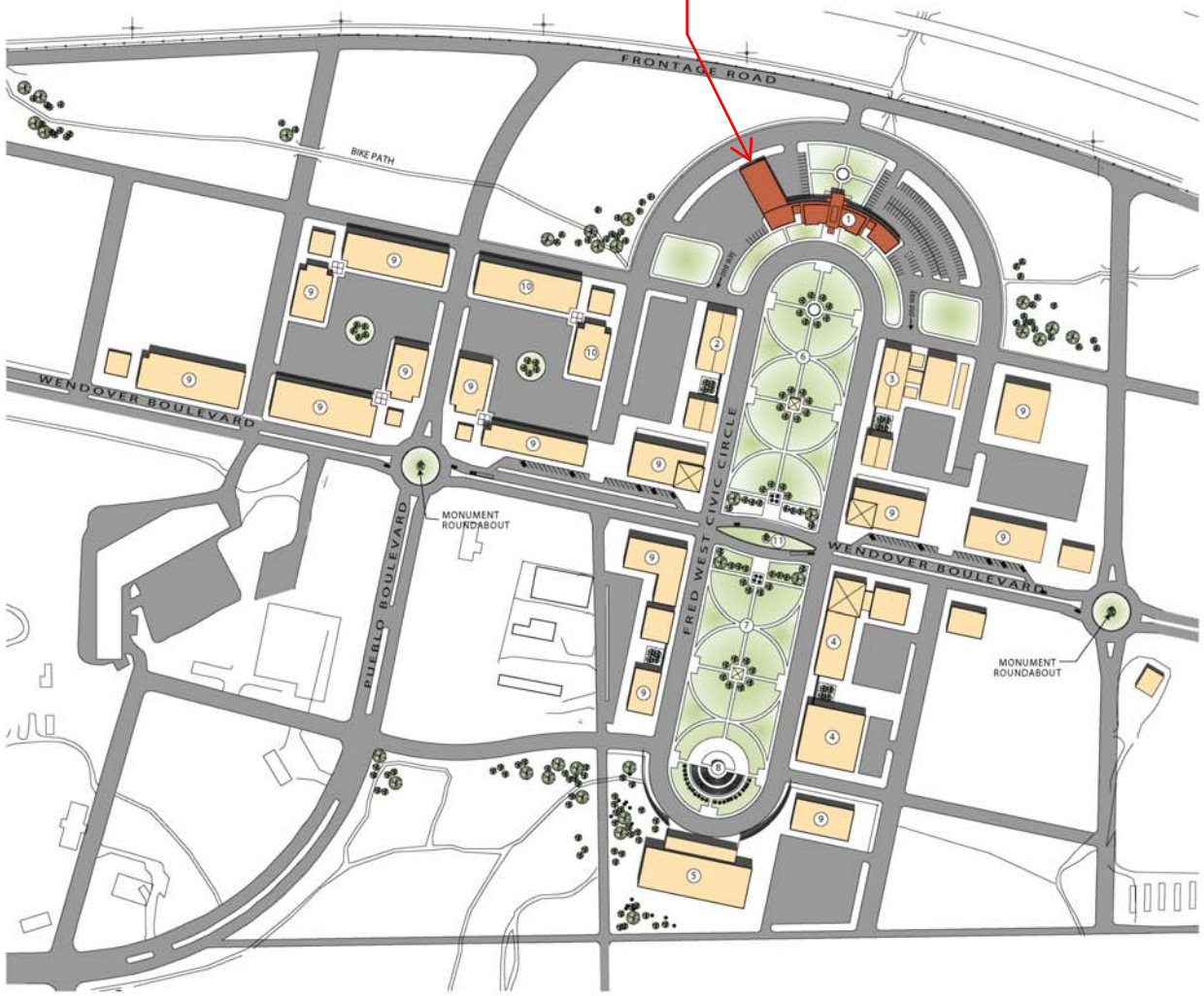

1 CITY HALL
2 LIBRARY
3 MUSEUM
4 CONVENTION CENTER
5 PERFORMING ARTS
6 CIVIC PLAZA
7 CITY PARK
8 AMPHITHEATER
9 COMMERCIAL / RETAIL SPACE
10 HOSPITAL
11 CITY CENTER MONUMENT

site plan

VALENTIEN CRANE architects

CITY OF WEST WENDOVER
WENDOVER, NEVADA

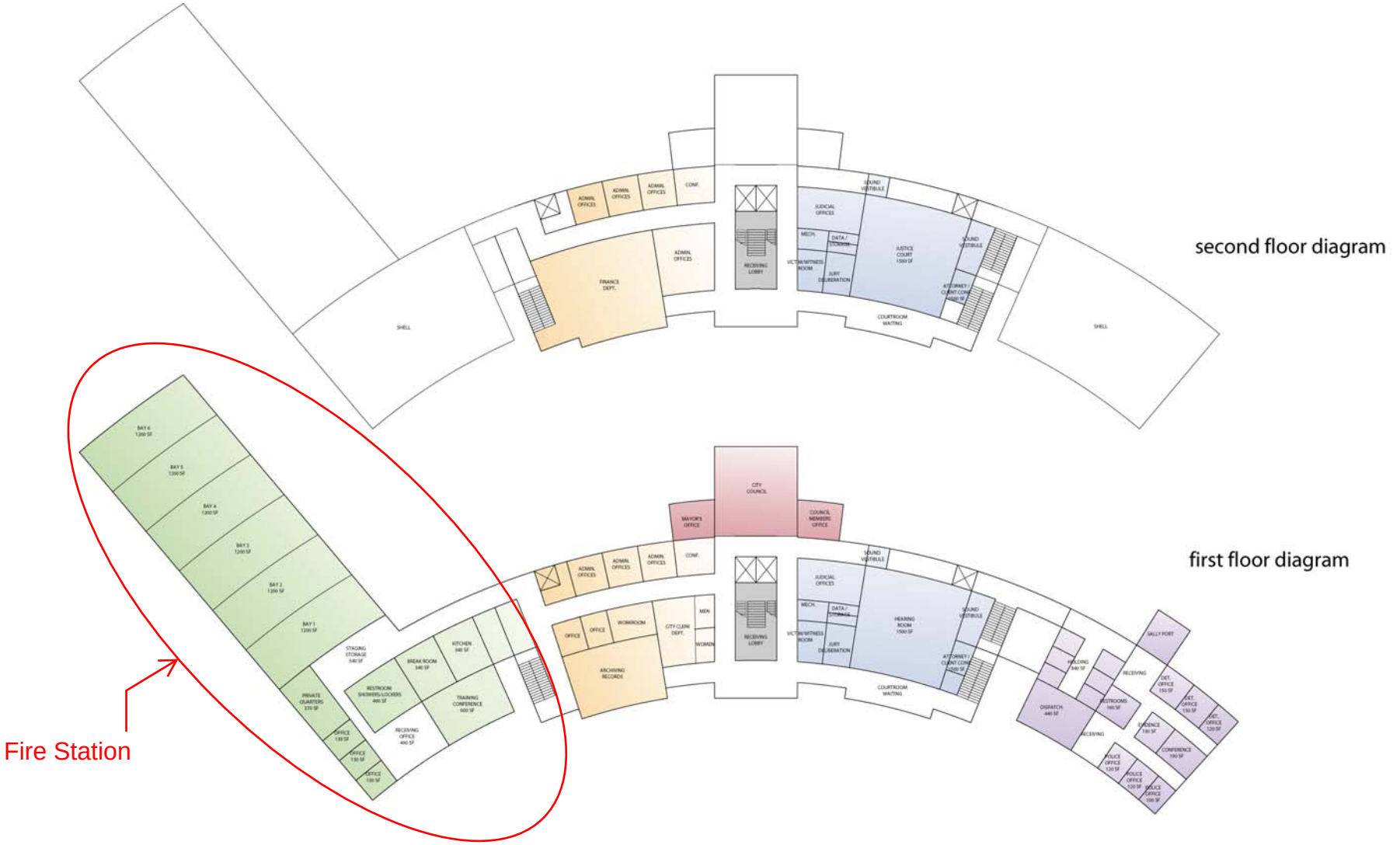
second floor diagram
first floor diagram
Fire Station



sketch

CITY OF WEST WENDOVER
WENDOVER, NEVADA























selected images

CITY OF WEST WENDOVER
WENDOVER, NEVADA

DEBT MANAGEMENT AND CAPITAL IMPROVEMENTS SUBMISSION

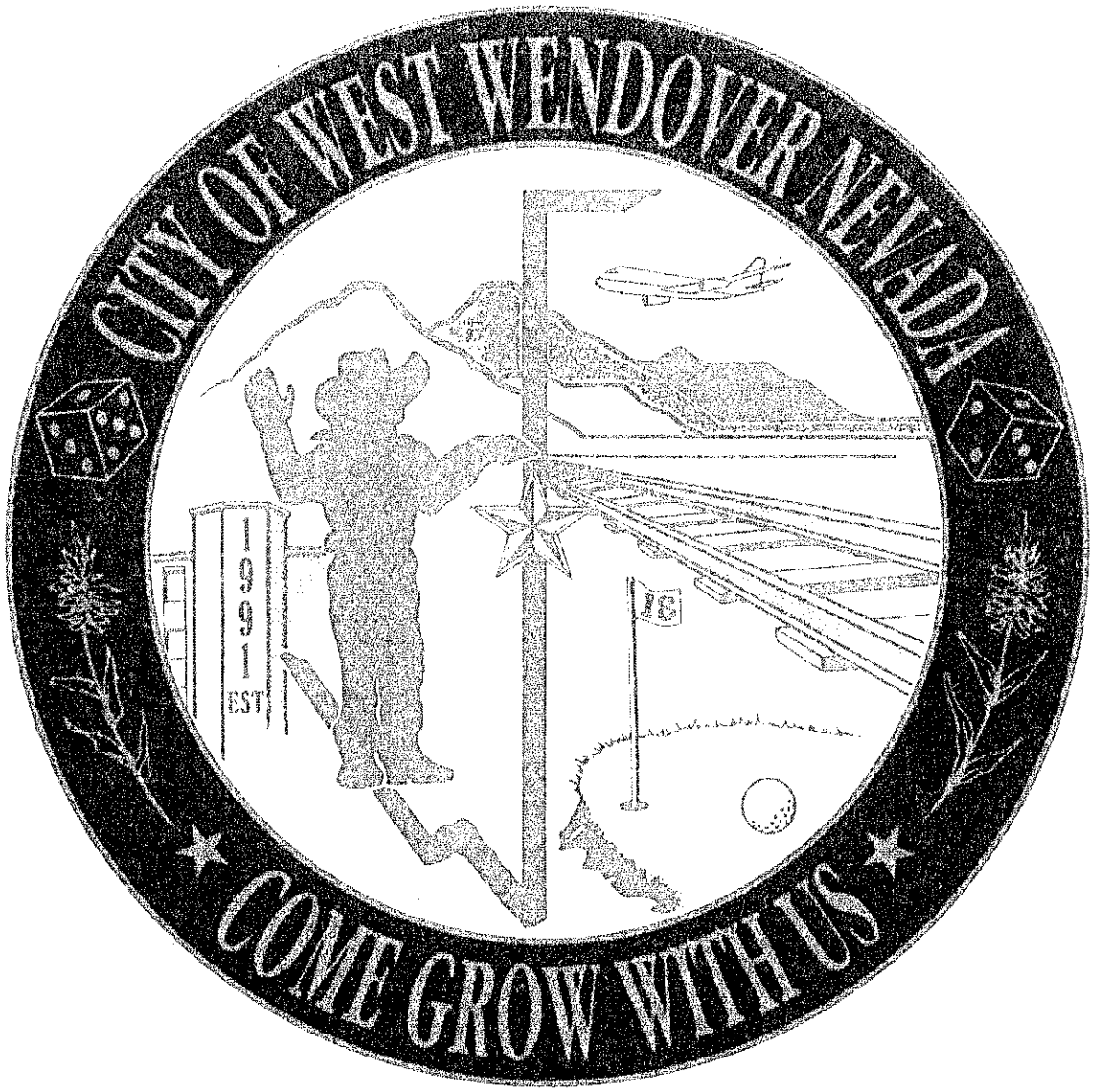

2015-2016

CITY OF WEST WENDOVER

DEBT MANAGEMENT AND CAPITAL IMPROVEMENTS SUBMISSION 2015 - 2016

DESCRIPTION	PAGE
SCHEDULES OF INDEBTEDNESS	
INDEBTEDNESS REPORT	1
SCHEDULE OF INDEBTEDNESS AS OF JUNE 30, 2016	2
SCHEDULE OF FIVE YEAR DEBT SERVICE REQUIREMENTS AS OF JUNE 30, 2016	3
SCHEDULES OF DEBT PAYMENT	4
GENERAL OBLIGATION MEDIUM-TERM BONDS	4a
MEDIUM-TERM CAPITAL LEASE PURCHASE	4b
REVENUE BONDS	4c
CONTEMPLATED GENERAL OBLIGATION DEBT	5
CHIEF FINANCIAL OFFICER STATEMENT	6
DEBT MANAGEMENT POLICY	6
GENERAL OBLIGATION BONDS	7
STATUTORY DEBT CAPACITY	7
MEDIUM TERM OBLIGATIONS	8
OTHER DEBT	9
FIVE-YEAR CAPITAL IMPROVEMENT PLAN	
GENERAL FUND CAPITAL IMPROVEMENTS (CIP-1)	10
GRANT FUND CAPITAL IMPROVEMENTS (CIP-1)	11
AD VALOREM CAPITAL PROJECTS FUND CAPITAL IMPROVEMENTS (CIP-1)	12
CAPITAL PROJECTS FUND CAPITAL IMPROVEMENTS (CIP-1)	13
WATER FUND CAPITAL IMPROVEMENTS (CIP-1)	14
SEWER FUND CAPITAL IMPROVEMENTS (CIP-1)	15
COMBINED GARBAGE/COMPOST FUND CAPITAL IMPROVEMENTS (CIP-1)	16
FIVE YEAR CAPITAL IMPROVEMENT PROJECTS PLAN NARRATIVE	18-26

Entity: City of West Wendover, Nevada Date: 08/01/16

INDEBTEDNESS REPORT

FY 2015-2016

DEBT MANAGEMENT COMMISSION ACT (NRS 350.013)

1. Has your local government issued any new General Obligation Bond issues since **July 1, 2015?** Yes (X) No ( )

   If so, amount: $2,200,000 Date: 07/14/2015

2. Has your local government approved any new Medium-Term Obligation issues since **July 1, 2015?** Yes ( ) No (X)

   If so, amount: $_____ Date: ____/____/____

3. Has your local government updated its debt management policy? (Per NRS 350.013) Yes (X) No ( )
   If Yes, submit updated policy with Indebtedness Report or prepare a statement discussing the following areas:

   A. Discuss the ability of your entity to afford existing and future general obligation debt.

   B. Discuss your entity's capacity to incur future general obligation debt without exceeding the applicable debt limit.

   C. Discuss the general obligation debt per capita of your entity as compared with the average for such debt of local governments in Nevada.

   D. Discuss general obligation debt of your entity as a percentage of **assessed valuation** of all taxable property within the boundaries of your entity. (**REDBOOK FY 2015-2016**)

   E. Present a policy statement regarding the manner in which your entity expects to sell its debt.

   F. Discuss the sources of money projected to be available to pay existing and future general obligation debt.

   G. Discuss the operating costs and revenue sources with each project.

   If No, please provide a brief explanation.

4. Has your local government updated its five-year capital improvement plan? Yes (X) No ( ) N/A ( )
   (Required pursuant to NRS 350.013, 354.5945 & 354.5947)

Submitted By: Michelle Gillis
(signature)

SCHEDULE OF INDEBTEDNESS

City of West Wendover

as of June 30, 2016

As required by NRS 350.013 (1)(a)(b) and NAC 350.0035, following is the Indebtedness Report for the City of West Wendover Nevada as of June 30, 2016.

Entity: City of West Wendover, Nevada

SCHEDULE OF INDEBTEDNESS AS OF JUNE 30, 2016

CHECK HERE IF YOUR ENTITY HAS NO OUTSTANDING DEBT ☐

GENERAL OBLIGATION BONDS		
1. General obligation		
2. General obligation/revenue		
3. General obligation special assessment		
Total general obligation bonded debt		**0**
MEDIUM-TERM OBLIGATIONS		
1. General Obligation bonds	5,477,000	
2. Negotiable notes or bonds		
3. Capital lease purchases		
Total medium-term obligation debt		**5,477,000**
REVENUE BONDS		**10,965,849**
OTHER DEBT		
1. Capital lease purchases-MTO not required or prior to law change	241,375	
2. Mortgages		
3. Warrants		
4. Special Assessments		
5. Other (specify)		
6. Other (specify)		
Total other debt		**241,375**
TOTAL INDEBTEDNESS		**16,684,224**

Authorized but unissued general obligation bonds

Note: Please explain and provide documentation for any differences between the amounts reported on this **schedule** and those reported on **Schedule C-1** of your **Final Fiscal Year 2016-2017 budget.**

Entity: City of West Wendover, Nevada

SCHEDULE OF FIVE YEAR DEBT SERVICE REQUIREMENTS AS OF JUNE 30, 2016

For the next five years, list the total dollar requirement for principal and interest broken down for each type of indebtedness the entity currently has outstanding.

	2016-2017	2017-2018	2018-2019	2019-2020	2020-2021
G/O Bonds					
G/O Revenue					
G/O Special Assessment					
Medium-Term Obligation					
G/O Bonds	$ 1,218,162	$ 943,548	$ 945,260	$ 499,133	$ 505,781
Notes/Bonds					
Leases/ Purchases					
Revenue Bonds	883,808	883,808	883,808	773,137	626,506
Other Lease Purchases	107,029	107,029	43,311	0	0
Mortgages					
Warrants					
Special Assessments					
Other Debt					
TOTAL	$ 2,208,999	$ 1,934,385	$ 1,872,379	$ 1,272,270	$ 1,132,287

General Obligation Medium-Term Bonds

City of West Wendover, Nevada

As of June 30, 2016

Total Bond Balance

Date	Principal	Interest	Total P+I	Bond Balance
				5,477,000.00
06/30/2017	1,062,000.00	156,162.10	1,218,162.10	4,415,000.00
06/30/2018	827,000.00	116,547.50	943,547.50	3,588,000.00
06/30/2019	858,000.00	87,260.10	945,260.10	2,730,000.00
06/30/2020	438,000.00	61,132.60	499,132.60	2,292,000.00
06/30/2021	455,000.00	50,781.30	505,781.30	1,837,000.00
06/30/2022	473,000.00	40,030.50	513,030.50	1,364,000.00
06/30/2023	493,000.00	28,844.60	521,844.60	871,000.00
06/30/2024	452,000.00	17,866.00	469,866.00	419,000.00
06/30/2025	206,000.00	7,141.60	213,141.60	213,000.00
06/30/2026	213,000.00	2,406.90	215,406.90	-
Total	**$5,477,000.00**	**$568,173.20**	**$6,045,173.20**	-

Par Amounts Of Selected Issues

6/29/07 General Obligation Medium-Term Bonds - Tax-Exempt 2007A - $1,410,000	265,000.00
2/27/09 General Obligation Medium-Term Bond - $2,200,000	773,000.00
9/04/08 General Obligation Medium-Term Bonds - $1,500,000	492,000.00
6/17/14 General Obligation Medium-Term Bonds - $2,100,000	1,747,000.00
07/14/15 General Obligation Medium-Term Bonds - $2,200,000	2,200,000.00
TOTAL	**5,477,000.00**

Revenue Bonds

City of West Wendover, Nevada
As of June 30, 2016

Total Bond Balance

Date	Principal	Interest	Total P+I	Bond Balance
				11,002,659.23
06/30/2017	448,891.87	434,916.33	883,808.20	10,553,767.37
06/30/2018	468,846.13	414,962.07	883,808.20	10,084,921.24
06/30/2019	489,343.72	394,464.48	883,808.20	9,589,000.13
06/30/2020	398,720.14	373,416.76	773,136.90	9,189,279.99
06/30/2021	269,889.02	356,616.98	626,506.00	8,919,390.97
06/30/2022	281,417.56	344,998.44	626,416.00	8,637,973.40
06/30/2023	293,166.51	333,249.49	626,416.00	8,344,806.89
06/30/2024	305,375.24	321,040.76	626,416.00	8,039,431.65
06/30/2025	317,968.22	308,447.78	626,416.00	7,721,463.43
06/30/2026	331,529.88	294,886.12	626,416.00	7,389,933.55
06/30/2027	345,442.01	280,973.99	626,416.00	7,044,491.54
06/30/2028	359,913.23	266,502.77	626,416.00	6,684,578.31
06/30/2029	374,909.31	251,506.69	626,416.00	6,309,669.00
06/30/2030	390,886.88	235,529.12	626,416.00	5,918,782.12
06/30/2031	407,370.30	219,045.70	626,416.00	5,511,411.83
06/30/2032	424,530.87	201,885.13	626,416.00	5,086,880.96
06/30/2033	442,385.12	184,030.88	626,416.00	4,644,495.84
06/30/2034	461,234.66	165,181.34	626,416.00	4,183,261.17
06/30/2035	480,775.75	145,640.25	626,416.00	3,702,485.42
06/30/2036	501,134.45	125,281.55	626,416.00	3,201,350.97
06/30/2037	522,389.40	104,026.60	626,416.00	2,678,961.57
06/30/2038	544,654.27	81,761.73	626,416.00	2,134,307.31
06/30/2039	567,832.81	58,583.19	626,416.00	1,536,948.64
06/30/2040	122,551.52	41,183.90	163,735.42	1,414,397.12
06/30/2041	100,837.83	38,366.17	139,204.00	1,313,559.29
06/30/2042	103,613.62	35,590.38	139,204.00	1,209,945.67
06/30/2043	106,465.84	32,738.16	139,204.00	1,103,479.83
06/30/2044	109,374.73	29,829.27	139,204.00	994,105.10
06/30/2045	112,407.49	26,796.51	139,204.00	881,697.61
06/30/2046	115,501.88	23,702.12	139,204.00	766,195.73
06/30/2047	118,681.50	20,522.50	139,204.00	647,514.23
06/30/2048	121,933.48	17,270.52	139,204.00	525,580.75
06/30/2049	125,305.38	13,898.62	139,204.00	400,275.37
06/30/2050	128,754.93	10,449.07	139,204.00	271,520.44
06/30/2051	132,299.49	6,904.51	139,204.00	139,220.95
06/30/2052	74,456.68	3,549.96	78,006.64	64,764.27
06/30/2053	27,882.97	2,357.03	30,240.00	36,881.30
06/30/2054	28,622.13	1,617.87	30,240.00	8,259.17
06/30/2055	29,380.90	859.10	30,240.00	(21,121.73) *
06/30/2056	14,981.52	138.46	15,119.98	(36,810.67) *
Total	**$11,002,659.23 ***	**$6,202,722.31**	**$17,205,381.54**	-

Par Amounts Of Selected Issues

11/17/98 Solid Waste Revenue USDA LoanBonds - $1,280,000	269,373.49 *
11/17/98 Water Revenue USDA Loan - $3,058,300	2,388,336.70 *
8/18/99 Solid Waste Revenue Bonds - $540,000	146,691.76
8/19/99 Solid Waste Revenue Bonds - $1,500,000	407,477.08
8/18/09 - Sales Tax Revenue USDA Loan - $5,225,000	4,550,173.75
5/16/12 Sewer Revenue Loan - $2,637,000	2,462,101.68
10/08/15 Potable Water Projects USDA Loan - $747,000	741,694.11 *
TOTAL	**10,965,848.57 ***

* Negative bond balance match amortization schedules provided by USDA Rural Development for the 1998 Solid Waste Water Bonds, 1998 Water Revenue Bonds and 2015 Potable Water Project Loan which have negative bond balances in final maturities (-6,577.39, -29,525.86 and -707.42, respectively). The USDA recently changed their system that calculates amortization schedules from a system that calculated on a 360 day basis, the new system calculates on a 365 basis. The negative balances are a result of the new calculation method and keeping the original payment amounts. Any overpayments will be refunded to the City.

Capital Lease Purchases

City of West Wendover, Nevada

As of June 30, 2016

Total Bond Balance

Date	Principal	Interest	Total P+I	Bond Balance
				241,374.91
06/30/2017	97,808.74	9,220.56	107,029.30	143,566.17
06/30/2018	101,646.66	5,382.63	107,029.29	41,919.51
06/30/2019	41,919.51	1,391.72	43,311.23	-
Total	**$241,374.91**	**$15,994.91**	**$257,369.82**	-

Par Amounts Of Selected Issues

09/26/12 - Garbage Truck Capital Lease Purchase - $232,157	121,760.78
6/18/13 Police Vehicle Capital Lease Purchase - $281,058.75	119,614.13
TOTAL	**241,374.91**

Entity: City of West Wendover, Nevada

(1) CONTEMPLATED GENERAL OBLIGATION DEBT PURPOSE	(2) TYPE	(3) AMOUNT	(4) TERM	(5) FINAL PYMT DATE	(6) INTEREST RATE
No comtemplated general obligation debt					

SPECIAL ELECTIVE TAX PURPOSE	TYPE	RATE	ELECTION DATE	EXPIRATION DATE	IMPLEMENTATION DATE
No contemplated special elective taxes					

Statement of Contemplated General Obligation Debt and Special Elective Taxes - Fiscal Year 2016-2017

CITY OF WEST WENDOVER, NEVADA

CHIEF FINANCIAL OFFICER STATEMENT
DEBT MANAGEMENT POLICY
GENERAL OBLIGATION BONDS
STATUTORY DEBT CAPACITY
MEDIUM TERM OBLIGATIONS
OTHER DEBT

CHIEF FINANCIAL OFFICER STATEMENT

As required by NRS 350.013 (1) (e), the name and address of the City's Chief Financial Officer is:

Michelle Giovo
Chief Financial Officer
P.O. Box 2825
West Wendover, Nevada 89883
(775) 664-3081

DEBT MANAGEMENT POLICY

As required by NRS 350.013 (1) (c) and NAC 350.0035), the following is the Debt Management Policy for the City of West Wendover, Nevada.

General Policy Statement:

The purpose of the City of West Wendover Debt Management Policy is to manage the issuance of the City's debt obligations and to maintain the City's ability to incur debt and other long-term obligations at favorable interest rates for capital improvements, facilities, and equipment beneficial to the City and also necessary for essential services.

Introduction and Purpose:

The City of West Wendover (the "City") has a Capital Improvement Plan ("CIP") which is a multi-year planning document that identifies and prioritizes the need for a variety of public improvements and coordinates their financing and construction time frames. More specifically, the CIP is a process that provides order and continuity to the repair, replacement, construction or expansion of the City's capital assets. With revenue limitations in mind, the City's CIP focuses primarily on the City's more immediate needs. The City's long term growth picture is positive, which includes gold mine operations within 30 miles of the city and further expansion of gaming properties based within the City; due to this expansion the need for infrastructure is increasing. This results in additional opportunities for Enterprise Fund activity that will generate revenues needed for future growth.

Legislation (described herein) requires local governments to prepare a debt management policy prior to authorizing additional general obligation debt. This document is not intended to review the City's total financial position. Analysis of the City's debt position is important because growth has resulted in an increased need for capital financing. Resources, as well as needs, drive

the City's debt issuance program. Decisions' regarding the use of debt is based on long-term needs of the City and the amount of equity (cash) dedicated in a given fiscal year to capital outlay.

As required by NRS 350.013 (1) (a) (b) and NAC 350.0035, the Indebtedness Report for the City of West Wendover, Nevada as of June 30, 2012 is included in this submission.

GENERAL OBLIGATION BONDS

1. General Obligation Bonds Supported by Ad Valorem Taxes:

The City of West Wendover has not issued general obligations bonds supported by ad valorem taxes. In addition, the City has no current plans for general obligation debt supported by ad valorem taxes.

2. General Obligation / Revenue Bonds:

The City has retired all General Obligation bonds; therefore we had no General Obligation bonds outstanding at June 30, 2016.

Statutory Debt Capacity:

State statutes limit the aggregate principal amount of general obligations debt to 30% of total assessed valuation (NRS 266.600). Based upon the assessed valuation for the fiscal year 2016-2017 of $131,466,292, the City's debt limit for general obligations is $39,439,888.

The following table illustrates the City's current general obligation debt in relation to the City's fiscal year 2016-2017 statutory debt limitation:

STATUTORY DEBT CAPACITY

Statutory Debt Limitation	$39,439,888
Outstanding General Obligation Indebtedness	$ -0-
Plus: Possible Future Ad Valorem Supported Bonds	$ -0-
Additional Statutory Debt Limitation	$39,439,888

General Obligation Debt per Capita (NRS 350.013):

The official West Wendover population is 4,478, as certified by the State of Nevada Department of Taxation in their published Final Population Worksheet that was prepared for use in 2016-2017 Revenue Projections. Because the City has no current general obligation debt, the per capita amount is zero.

General Obligation Debt as a percentage of Assessed Valuation (NRS 350.013):

The current general obligation debt is zero.

Policy regarding manner expected to sell new debt for FY2016-2017 (NRS 350.013):

The City of West Wendover does not anticipate the issuance of new debt during the 2016-2017 fiscal year.

Sources of money projected to be available to pay current and future general obligation debt (NRS 350.013):

West Wendover's general obligation debt is zero. But if debt were issued in the future, the revenue from property tax, licenses and permits, intergovernmental revenue, charges for services, fines and forfeitures, and miscellaneous revenue would be considered as the source for any repayment.

3. General Obligation Special Assessment Bonds:

The City of West Wendover has not issued any general obligation special assessment bonds. In addition, the City does not currently plan for issuance of general obligation special assessment bonds.

4. Revenue Bonds:

Sales Tax Revenue Bonds are payable from pledged revenue received from Consolidated Tax Revenue.

Other Revenue bonds' principal and interest are payable exclusively from earnings of enterprise funds. Enterprise funds are proprietary funds used to report activities for which a fee is charged to external users for goods or services. The City of West Wendover, Nevada operates the following enterprise funds: Water Enterprise Fund, Sewer Enterprise Fund, a combined Garbage Services / Compost Enterprise Fund and Johnson Springs Transmission Systems Fund.

Each of these enterprise funds has entered into revenue bond debt obligations which constitute a direct and general obligation of the City. The full faith and credit of the City is pledged for the payment of principal and interest due thereon.

These revenue bonds are secured by the revenue received by the City from customers for sewer, water, landfill and garbage service charges, sewer and water hook-up fees, after payment of reasonable and necessary costs for the operation and maintenance expenses of the City's Enterprise Funds (the "Net Pledged Revenues").

MEDIUM TERM OBLIGATIONS

Under NRS 350.085-.095: NAC 350.100-.160, the City may issue negotiable notes or medium-term negotiable bonds. Those issues, approved by the Director of the Department of Taxation, are payable from all legally available funds. The referenced statute does not authorize a special property tax override. The negotiable notes or bonds must meet the following requirements:

1. Must mature not later than ten (10) years after the date of issuance.

2. If the maximum term of the financing is more than five (5) years, the term may not exceed the estimated useful life of the asset to be purchased with the proceeds from the financing.

3. No medium-term financing resolution is effective until approved by the West Wendover City Council, with the Director of the Department of Taxation having the final approval authority.

5. Negotiable Notes / Bonds (including General Obligation bonds) and Capital Leases

Includes all medium-term indebtedness that has been incurred whether approved or not, pursuant to the provisions of NRS Chapter 350, Municipal Obligations.

OTHER DEBT

6. Other Lease Purchases

This category includes capital leases entered into prior to the law change requiring capital leases to be approved under the medium-term obligation requirements. Also included in this category are capital leases that are not counted against the debt limit under NRS 350.800 and is less than $50,000, the minimum amount for approval under the medium term financing requirement.

NRS 350.800 defines a lease transaction as a transaction whereby a municipality acquires real or personal property and another person acquires or retains security interest in that or other property and creates a general obligation of the municipality which must be counted against any limit upon its debt unless:

(a) The obligation by its terms is extinguished by failure of the governing body to appropriate money for the ensuing fiscal year for payment of the amounts then due; or

(b) The budget of the municipality for the fiscal year in which the transaction occurs includes a provision for the discharge of the obligation in full.

This category also includes Certificates of Participation, which are repaid through annual appropriations from general revenue similar to lease payments.

7. Mortgages

This category includes amounts of any USBRL, REA, or FHA mortgages.

The City of West Wendover has issued Nevada Sales Tax Revenue Bonds, Series 2009 in the amount of $5,225,000 from USDA Rural Development for the debt of the New Government Building (City Hall), which is secured with a mortgage on the building.

8. Warrants

The City of West Wendover has not entered into any warrant debt obligations. In addition, the City does not currently plan for issuance of warrant debt obligations during fiscal year 2016-2017.

9. Special Assessment Bonds

The City of West Wendover has not entered into any special assessment bond debt obligations. In addition, the City does not currently plan for issuance of any special assessment bond debt obligations during fiscal year 2016-2017.

10. Other Debt

The City does not currently plan for issuance of any other types of debt obligations during fiscal year 2016-2017.

FIVE YEAR CAPITAL IMPROVEMENT PLAN

City of West Wendover

as of June 30, 2016

As required by NRS 350.013 (1)(d), following is the Five Year Capital Improvement Plan for the City of West Wendover Nevada.

FIVE YEAR CAPITAL IMPROVEMENT PLAN (Per NRS 354.5945) **ENTITY:** City of West Wendover

Minimum level of expenditure for items classified as capital assets $ 5,000 **DATE:** August 1, 2016

Minimum level of expenditure for items classified as capital projects $ 100,000

		FY 2016-2017	FY 2017-2018	FY 2018-2019	FY 2019-2020	FY 2020-2021	Written Plan Ref #	Total Expenditure- All Funding Sources	Notes:
Fund:	General - Public Works - Paved Streets						9		
Capital Improvement:	Infrastructure North Interstate 80 Exit #410, Phase 2, Leppy Hills Blvd & Other			2,200,000				3,700,000	
Funding Source:	General Revenues, RTC Funds, NDOT Grant Funds, Federal Grant Funds, Potential Private Resources								
Completion Date:	6/30/2019								
Fund:	General - Public Safety - Fire Department						12		
Capital Improvement:	Aerial Platform Class 1 Engine			500,000				925,000	
Funding Source:	General Revenues, Grant Funds and Private								
Completion Date:	6/30/2019								
Fund:	General - Public Works - Paved Streets						13		
Capital Improvement:	Sidewalk Rehabilitation Project-Various Locations			200,000				200,000	
Funding Source:	General Revenues, RTC Funds, CDBG Grant								
Completion Date:	6/30/2021								

FIVE YEAR CAPITAL IMPROVEMENT PLAN (Per NRS 354.5945) **ENTITY:** City of West Wendover

Minimum level of expenditure for items classified as capital assets $ 5,000 **DATE:** August 1, 2016

Minimum level of expenditure for items classified as capital projects $ 100,000

		FY 2016-2017	FY 2017-2018	FY 2018-2019	FY 2019-2020	FY 2020-2021	Written Plan Ref #	Total Expenditure- All Funding Sources	Notes:
Fund:	General - Public Works - Paved Streets						26		
Capital Improvement:	Rehabilitaton Wendover Boulevard Phase 1					700,000		700,000	
Funding Source:	General Revenues, RTC Funds								
Completion Date:	6/30/2021								
Fund:	General - Public Works - Paved Streets						29		
Capital Improvement:	Rehabilitaton Wendover Boulevard Phase 2					850,000		850,000	
Funding Source:	General Revenues, RTC Funds								
Completion Date:	6/30/2021								
Fund:	General - Public Works - Paved Streets						30		
Capital Improvement:	Rehabilitaton Wendover Boulevard Phase 3					950,000		950,000	
Funding Source:	General Revenues, RTC Funds								
Completion Date:	6/30/2021								
Fund:	General - Public Works - Paved Streets						31		
Capital Improvement:	Infrastructure North Interstate 80 Exit #410, Phase 3					550,000		550,000	
Funding Source:	General Revenues, RTC Funds, NDOT Grant Funds, Private Resources								
Completion Date:	6/30/2021								

FIVE YEAR CAPITAL IMPROVEMENT PLAN (Per NRS 354.5945) **ENTITY:** City of West Wendover

Minimum level of expenditure for items classified as capital assets $ 5,000 **DATE:** August 1, 2016

Minimum level of expenditure for items classified as capital projects $ 100,000

		FY 2016-2017	FY 2017-2018	FY 2018-2019	FY 2019-2020	FY 2020-2021	Written Plan Ref #	Total Expenditure- All Funding Sources	Notes:
Fund:	General - Public Works - Paved Streets								
							35		
Capital Improvement:	Florence Way Upgrade and Relocation Phase 4					850,000		850,000	
Funding Source:	General Fund, CDBG Grant and RTC Funds								
Completion Date:	6/30/2021								
Fund:	General - General Governments								
							N/A		
Capital Asset:	Software Program	5,000						5,000	
Funding Source:	General Fund								
Completion Date:	6/30/2017								
Fund:	General - Public Safety								
							N/A		
Capital Asset:	Safety Trailer-Speed Camera	12,500						12,500	
Funding Source:	General Fund								
Completion Date:	6/30/2017								
Fund Total		**17,500**	**0**	**2,900,000**	**0**	**3,900,000**		**8,742,500**	

FIVE YEAR CAPITAL IMPROVEMENT PLAN (Per NRS 354.5945) ENTITY: City of West Wendover

Minimum level of expenditure for items classified as capital assets $ 5,000 DATE: August 1, 2016

Minimum level of expenditure for items classified as capital projects $ 100,000

		FY 2016-2017	FY 2017-2018	FY 2018-2019	FY 2019-2020	FY 2020-2021	Written Plan Ref #	Total Expenditure-All Funding Sources	Notes:
Fund:	Grant Fund								
Capital Improvement:	InterOperability and Networking City GIS, Police, Police Dispatch, and Emergency Services		360,000				8	475,000	
Funding Source:	CDBG Grant, Public Safety Grants, General Fund								
Completion Date:	6/30/2018								
Fund:	Grant Fund								
Capital Improvement:	Public Park Improvements, 3-Acres, Tibbets Blvd				250,000		15	500,000	
Funding Source:	General Fund, Private Developers, West Wendover Recreation District Partnership, CDBG								
Completion Date:	6/30/2020								
Fund:	Grant Fund								
Capital Improvement:	Leppy Hills Trails Addition					400,000	27	750,000	
Funding Source:	General Fund and Nevada State Lands Grant								
Completion Date:	6/30/2021								
Fund:									
Capital Improvement:									
Funding Source:									
Completion Date:									
Fund Total		0	360,000	0	250,000	400,000		1,725,000	

Page 108 of 4581

CIP-1

Grant Fund Page 1 of 1

FIVE YEAR CAPITAL IMPROVEMENT PLAN (Per NRS 354.5945) **ENTITY:** City of West Wendover

Minimum level of expenditure for items classified as capital assets $ 5,000 **DATE:** August 1, 2016

Minimum level of expenditure for items classified as capital projects $ 100,000

		FY 2016-2017	FY 2017-2018	FY 2018-2019	FY 2019-2020	FY 2020-2021	Written Plan Ref #	Total Expenditure-All Funding Sources	Notes:
Fund:	Ad Valorem Capital Projects Fund								
Capital Improvement:	Construct New Animal Shelter				475,000		14	475,000	
Funding Source:	Ad Valorem Cap Proj Fund, General Fund, CDBG Grant, Private Funding								
Completion Date:	6/30/2020								
Fund:									
Capital Improvement:									
Funding Source:									
Completion Date:									
Fund:									
Capital Improvement:									
Funding Source:									
Completion Date:									
Fund Total		0	0	0	475,000	0			

FIVE YEAR CAPITAL IMPROVEMENT PLAN (Per NRS 354.5945) ENTITY: City of West Wendover

Minimum level of expenditure for items classified as capital assets $ 5,000 DATE: August 1, 2016

Minimum level of expenditure for items classified as capital projects $ 100,000

		FY 2016-2017	FY 2017-2018	FY 2018-2019	FY 2019-2020	FY 2020-2021	Written Plan Ref #	Total Expenditure- All Funding Sources	Notes:
Fund:	Capital Projects Fund						1		
Capital Improvement:	Florence Way Upgrade and Relocation, Phase 3	0						2,300,000	
Funding Source:	Elko County School District, City General Fund	City General Fund						ECSD	
Completion Date:	6/30/2017								
Fund:	Capital Projects Fund						2		
Capital Improvement:	Florence Way Upgrade and Relocation Phase 2	482,600						2,500,602	
Funding Source:	General Fund, CDBG Grant, and RTC Funds	RTC, CDBG, GO Med-Term							
Completion Date:	6/30/2017								
Fund:	Capital Projects Fund						3		
Capital Improvement:	West Wendover Street Rehab Projects	215,100						777,100	
Funding Source:	GO Med-Term Loan	GO Med-Term							
Completion Date:	6/30/2017								
Fund:	Capital Projects Fund						4		
Capital Improvement:	Storm Drainage Improvements	250,000						777,100	
Funding Source:	GO Med-Term Loan	GO Med-Term							
Completion Date:	6/30/2017								
Fund:	Capital Projects Fund						5		
Capital Improvement:	West Wendover Multi-Modal Enhancement Phase I - Rail Passenger Station		1,800,000					6,500,000	
Funding Source:	General Fund, USDOT, CDBG, Private								
Completion Date:	6/30/2018								

FIVE YEAR CAPITAL IMPROVEMENT PLAN (Per NRS 354.5945) ENTITY: City of West Wendover

Minimum level of expenditure for items classified as capital assets $ 5,000 DATE: August 1, 2016

Minimum level of expenditure for items classified as capital projects $ 100,000

		FY 2016-2017	FY 2017-2018	FY 2018-2019	FY 2019-2020	FY 2020-2021	Written Plan Ref #	Total Expenditure- All Funding Sources	Notes:
Fund:	Capital Projects Fund								
Capital Improvement:	West Wendover Multi-Modal Enhancement Phase 2 - Welcome Center Transportation Hub		700,000				7	1,400,000	
Funding Source:	General Fund, RTC, USDOT, CDBG, Private								
Completion Date:	6/30/2018								
Fund:	Capital Projects Fund								
Capital Improvement:	Fire Station Facility			2,500,000			11	3,500,000	
Funding Source:	Grant Resources, Private Funds, Medium-Term Obligation								
Completion Date:	6/30/2019								
Fund:	Capital Projects Fund								
Capital Improvement:	Wendover Regional Multi Model Enhancement Project Phase 1					2,400,000	19	4,800,000	
Funding Source:	General Fund, RTC Funds, NDOT and USDOT Funding Programs, Private Funding								
Completion Date:	6/30/2021								
Fund:	Capital Projects Fund								
Capital Improvement:	Wendover Regional Multi Model Enhancement Project Phase 2					1,125,000	20	2,250,000	
Funding Source:	Wendover Airport/Tooele County UT, USDOT Funding Programs, Private Funding								
Completion Date:	6/30/2021								

FIVE YEAR CAPITAL IMPROVEMENT PLAN (Per NRS 354.5945) ENTITY: City of West Wendover

Minimum level of expenditure for items classified as capital assets $ 5,000

Minimum level of expenditure for items classified as capital projects $ 100,000

DATE: August 1, 2016

		FY 2016-2017	FY 2017-2018	FY 2018-2019	FY 2019-2020	FY 2020-2021	Written Plan Ref #	Total Expenditure- All Funding Sources	Notes:
Fund:	Capital Projects Fund						21		
Capital Improvement:	Wendover Regional Multi Model Enhancement Project Phase 3					550,000		1,125,000	
Funding Source:	General Fund, RTC Funds, NDOT and USDOT Funding Programs, Wendover UT, Private Funding								
Completion Date:	6/30/2021								
Fund:	Capital Projects Fund						22		
Capital Improvement:	Wendover Regional Multi Model Enhancement Project Phase 4					1,100,000		2,350,000	
Funding Source:	USDOT Funding Programs, Wendover UT, Wendover Airport/Tooele County, Private Funding								
Completion Date:	6/30/2021								
Fund:	Capital Projects Fund						23		
Capital Improvement:	Wendover Regional Multi Model Enhancement Project Phase 5					900,000		1,800,000	
Funding Source:	USDOT Funding Programs, Wendover UT, Wendover Airport/Tooele County, Private Funding								
Completion Date:	6/30/2021								
Fund:	Capital Projects Fund						24		
Capital Improvement:	Wendover Regional Multi Model Enhancement Project Phase 6					2,100,000		4,200,000	
Funding Source:	General Fund, RTC Funds, NDOT and USDOT Funding Programs, Private Funding								
Completion Date:	6/30/2021								

FIVE YEAR CAPITAL IMPROVEMENT PLAN (Per NRS 354.5945) ENTITY: City of West Wendover

Minimum level of expenditure for items classified as capital assets $ 5,000 DATE: **August 1, 2016**

Minimum level of expenditure for items classified as capital projects $ 100,000

		FY 2016-2017	FY 2017-2018	FY 2018-2019	FY 2019-2020	FY 2020-2021	Written Plan Ref #	Total Expenditure- All Funding Sources	Notes:
Fund:	Capital Projects Fund						25		
Capital Improvement:	Land Acquisition of BLM Land for Downtown Development					1,500,000		3,000,000	
Funding Source:	General Revenues/Public-Private Partemships								
Completion Date:	6/30/2021								
Fund:	Capital Projects Fund						28		
Capital Improvement:	City Public Facilities (Medical, Educational, Amphitheater, Parks, Entertainment and Tourism)					15,400,000		20,540,000	
Funding Source:	Bonding, Private Sources and Grants								
Completion Date:	6/30/2021								
Fund:	Capital Projects Fund						32		
Capital Improvement:	Acquisition of Air Force Property Phase 1					4,575,000		6,100,000	
Funding Source:	General Fund and U.S. Government								
Completion Date:	6/30/2021								
Fund:	Capital Projects Fund						33		
Capital Improvement:	Infrastructure Pueblo Blvd/Tibbets Blvd Extensions					5,850,000		7,800,000	
Funding Source:	RTC Funding, Bonding and Private Partnerships								
Completion Date:	6/30/2021								

FIVE YEAR CAPITAL IMPROVEMENT PLAN (Per NRS 354.5945) ENTITY: City of West Wendover

Minimum level of expenditure for items classified as capital assets $ 5,000

Minimum level of expenditure for items classified as capital projects $ 100,000

DATE: **August 1, 2016**

		FY 2016-2017	FY 2017-2018	FY 2018-2019	FY 2019-2020	FY 2020-2021	Written Plan Ref #	Total Expenditure- All Funding Sources	Notes:
Fund:	Capital Projects Fund								
Capital Improvement:	Port of West Wendover Phase 1 Infrastructure					10,500,000	34	14,000,000	
Funding Source:	Bonding, Developers, RTC, NDOT, FAA and Others								
Completion Date:	6/30/2021								
Fund:	Capital Projects Fund								
Capital Improvement:	Annexation of BLM Property					375,000	36	375,000	
Funding Source:	General Fund Revenues								
Completion Date:	6/30/2021								
Fund:	Capital Projects Fund								
Capital Improvement:									
Funding Source:									
Completion Date:									
Fund Total		947,700	2,500,000	2,500,000	0	46,375,000		86,094,802	

FIVE YEAR CAPITAL IMPROVEMENT PLAN (Per NRS 354.5945) ENTITY: City of West Wendover

Minimum level of expenditure for items classified as capital assets $ 5,000

Minimum level of expenditure for items classified as capital projects $ 100,000

DATE: August 1, 2016

		FY 2016-2017	FY 2017-2018	FY 2018-2019	FY 2019-2020	FY 2020-2021	Written Plan Ref #	Total Expenditure- All Funding Sources	Notes:
Fund:	Water Fund								
Capital Improvement:	Water Line Extension and UPRR Crossing		150,000				6	150,000	
Funding Source:	Water Revenues								
Completion Date:	6/30/2018								
Fund:	Water Fund								
Capital Improvement:	Sycamore Waterline Relocation Project				400,000		17	560,000	
Funding Source:	Water Revenues, NDEP								
Completion Date:	6/30/2020								
Fund:	Water Fund								
Capital Improvement:	Sycamore Way Water Connection Project				45,000		18	45,000	
Funding Source:	Water Revenues, NDEP								
Completion Date:	6/30/2020								
Fund:									
Capital Improvement:									
Funding Source:									
Completion Date:									
Fund Total		0	150,000	0	445,000	0		755,000	

CIP-1

WATER FUND Page 1 of 1

FIVE YEAR CAPITAL IMPROVEMENT PLAN (Per NRS 354.5945) **ENTITY:** City of West Wendover

Minimum level of expenditure for items classified as capital assets $ 5,000 **DATE:** August 1, 2016

Minimum level of expenditure for items classified as capital projects $ 100,000

		FY 2016-2017	FY 2017-2018	FY 2018-2019	FY 2019-2020	FY 2020-2021	Written Plan Ref #	Total Expenditure-All Funding Sources	Notes:
Fund:	Sewer Fund								
Capital Improvement:	Building Improvement - Buttresses	0					N/A	92,300	
Funding Source:	Sewer Revenues and CDBG Planning Grant								
Completion Date:	6/30/2016								
Fund:	Sewer Fund								
Capital Improvement:	10" ReUse Line to Toana Vista Golf Course Storage			600,000			10	1,600,000	
Funding Source:	State Revolving Fund, NDEP Clean Water								
Completion Date:	6/30/2019								
Fund:	Sewer Fund								
Capital Improvement:	Waste Water Facility, Solar Array				200,000		16	400,000	
Funding Source:	Sewer Revenues, DOE Grant								
Completion Date:	6/30/2020								
Fund:									
Capital Improvement:									
Funding Source:									
Completion Date:									
Fund Total		0	0	600,000	200,000	0		2,092,300	

FIVE YEAR CAPITAL IMPROVEMENT PLAN (Per NRS 354.5945) ENTITY: City of West Wendover

Minimum level of expenditure for items classified as capital assets $ 5,000 DATE: August 1, 2016

Minimum level of expenditure for items classified as capital projects $ 100,000

		FY 2016-2017	FY 2017-2018	FY 2018-2019	FY 2019-2020	FY 2020-2021	Written Plan Ref #	Total Expenditure-All Funding Sources	Notes:
Fund:									
Capital Improvement:									
Funding Source:									
Completion Date:									
Fund:									
Capital Improvement:									
Funding Source:									
Completion Date:									
Fund Total		0	0	0	0	0			

FIVE YEAR CAPITAL IMPROVEMENT PROJECTS PLAN NARRATIVE

City of West Wendover

FY2016-2017 through FY2020-2021

CITY OF WEST WENDOVER
FIVE YEAR CAPITAL IMPROVEMENT PROJECTS PLAN
FISCAL 2016-2017 thru 2020-2021
By Priority

√ Denotes Project engineering design and/or construction underway.

2016-2017

1. **√ FLORENCE WAY UPGRADE AND RELOCATION (SOUTH FLORENCE WAY) PHASE 3 (MESA STREET TO LAGUNA DRIVE & LAGUNA DRIVE EXT.) – COST ($2,300,000).**
This project consists of relocating Florence Way to the boundary of the right-of-way of the Union Pacific Railroad (UPRR). This project would remedy several serious situations with regard to the current condition and placement of Florence Way as a major arterial street. The new Florence Way would be constructed in four phases. Full completion would include four travel lanes, two bike lanes, appropriate curb, gutter and sidewalk and a protective fence along recreational properties; currently non-existent. Initial width would be two travel lanes and turn lane with other facilities included. Phase 3 would include the reconstruction of Mesa Street intersection and continue west serving Elko County School District Properties including a New Elementary School Complex and making a connection to an extension of Laguna Drive. ROW for the project is now in place. The street full design (four travel lanes, turn lane and center islands) may be completed in a subsequent phase dependent on traffic volumes.

   Progress Report: Project construction underway by Elko County School District. Funding by Elko County School District. FY 2016-2017

2. **√ FLORENCE WAY UPGRADE AND RELOCATION (SOUTH FLORENCE WAY) PHASE 2 (CAMPER DRIVE TO MESA STREET) – COST ($2,500,602).**
This project consists of relocating Florence Way to the boundary of the right-of-way of the Union Pacific Railroad (UPRR). This project would remedy several serious situations with regard to the current condition and placement of Florence Way as a major arterial street. The new Florence Way would be constructed in four phases. Initial width includes two travel lanes, turn lane, two bike lanes, appropriate curb, gutter and sidewalk. Phase 2 includes improvements from Camper Drive intersection to Mesa Street intersection. The street full design (four travel lanes, turn lane and center islands) may be completed in a subsequent phase dependent on traffic volumes.

   Progress Report: Funding in place, design now underway. Construction start estimated spring 2016. Funded through NDOT Grant, CDBG Grant and City Medium Term Obligation using annual RTC Funds for repayment. FY 2016-2017

3. **√ WEST WENDOVER STREET REHAB PROJECTS 2015-2016 – COST ($300,000).**
The 2015-2106 Street Rehab Projects including the rehabilitation of several major street segments in the community which require additional investments outside of the normal maintenance cycle. The initial selected areas include Wendover Boulevard, Mesa Street and Other collector and arterial street segments within the city.

   Progress Report: Funding in place, assessment of street selection completed. Funded by City Medium Term Obligation using annual RTC Funds for repayment. FY2016-2017

4. **√ STORM DRAINAGE IMPROVEMENTS – COST ($250,000).**
During calendar 2014 and 2015 the City experienced some severe flooding events which will require additional storm drainage improvements, modifications and evaluation. Currently an evaluation of the impacts and solutions based on these events is being completed by the City Engineer. A report is expected by August 2015. This will give the city a workable plan for completing the work necessary. Additionally the city will undertake completion of a storm water master plan.

Progress Report: City Engineer completing evaluation and has provided recommendations. Review underway by Public Works Director for selection and proposed bidding . Project to funding through Street Funds associated with RTC Medium Term Obligation already completed by City and Sewer Fund. FY 2016-2017

2017-2018

5. **√ WEST WENDOVER MULTI MODAL ENCHANCEMENT PHASE 1 – RAIL PASSENGER STATION – AMTRAK – COST ($6,500,000).**
Phase 1 includes the construction of a passenger train station, related platform and ancillary facilities on Florence Way approximately ½ mile from the West Wendover Welcome Center. The facility would be constructed per design and service requirements of Amtrak and Union Pacific Railroad (the host railroad). The City and Amtrak executed a MOU on February 11, 2015 for the related facility design, construction and required service. The City has applied for USDOT grant funding for the project and has received support for the project Governor's Office as well as Amtrak and Union Pacific Railroad among many other agencies and businesses. The project has considerable components related to Economic Development/ Job Creation per the BCA completed for USDOT.

Progress Report: MOU executed with Amtrak, host railroad has provided initial approval, 10% design has been complete per UPRR requirements. City pursuing grant funding and other sources through the State to proceed with facility design and construction. Project funding through General Fund, USDOT Funding, CDBG funding and potential private funds. FY 2017-2018

6. **WATER LINE EXTENSION AND UPRR CROSSING, SECTION 16 & 17 – COST ($150,000).**
This project includes connecting to the a main water line connection that is currently being completed as part of Florence Way Phase 2 at the intersection of Mesa Street and new Florence Way. This 12" line would cross the UPRR main line following the north-south Section 16/17 line to the southeast via a 24" sleeve under the UPRR main line. This would then be used to eventually provide a looped main line connecting with the current main line crossing near U.S. 93A in the industrial park. This will provide redundancy in the system which feeds this area including the service line to Wendover, Utah, while providing the capability to provide redundancy to existing services and provide new capabilities to service future developments in this area.

Progress Report: Line interconnection underway as part of Florence Way Phase 2. Engineering design complete, permit with UPRR in process. Project funding through Water Fund. FY 2017-2018

<Rest of Page Intentionally Left Blank>

7. **WEST WENDOVER MULTI MODAL ENHANCEMENT PHASE 2 – WELCOME CENTER MULTI MODAL TRANSPORTATION HUB – COST ($1,400,000).**
Phase 2 includes the modification of the Nevada – West Wendover Welcome Center now owned by the City, located on at the intersection of Wendover Boulevard and Florence Way. The facility would be modified to include capabilities to function as a multi-modal transportation hub including bus, rail and related services in addition to continuing to serve a role as a tourism center.

Progress Report: Welcome Center facility acquisition complete. Conceptual design layout complete to include new bus terminal area and related parking. Project funding through RTC Funds, USDOT Funding, CDBG Funding and potential private funding. FY 2017-2018

8. **INTEROPERABILITY AND NETWORKING CITY GIS, POLICE, POLICE DISPATCH AND EMERGENCY SERVICES – COST ($475,000)**
The City of West Wendover continues its progress with regard to upgrades to the City's Community Development Department which includes GIS Mapping for the community along with upgrades to the Police Dispatch System for capability to integrate, use and transmit GIS, law enforcement and emergency services information from Dispatch to officers and personnel on the street via wireless networking and related equipment in vehicles. This upgrade also includes installation of additional antennae within the community and or relocation of existing transmitters for better coverage. The project is likely to be completed in phases.

Progress Report: City GIS base mapping complete and Police Dispatch System upgraded with basic capabilities for GIS and networking. Funding to be provided through General Fund and possible CDBG Grant and other Potential Public Safety Grants. FY 2017-2018

2018-2019

9. **INFRASTRUCTURE NORTH INTERSTATE 80 EXIT #410, PHASE 2, LEPPY HILLS BLVD & OTHER – COST ($3,700,000).**
The City of West Wendover is proceeding with planned development initiatives, which include infrastructure (arterial, collector street and utility services) on the north side of Exit #410 at Interstate 80. This area includes access to public federal lands including the Leppy Hills Trails complex in addition to commercial development areas and continued access to the NDOT maintenance facility. The project fulfills obligations of the City under the Memorandum of Understanding executed in 2009 between the City of West Wendover, Nevada Department of Transportation and the Federal Highway Administration for access at Interstate 80, Exit 410. The infrastructure would establish necessary public improvements for this area. The project including pedestrian accesses related to Exit 410 may be phased.

Progress Report: Funding sources would include General Fund, City RTC Funds as well as potential USDOT Grant Funds, and potential Private Resources. FY 2018-2019

10. **INSTALL NEW 10" RE-USE LINE FROM WASTE WATER FACILITY TO TOANA VISTA GOLF COURSE STORAGE FACILITY – COST ($1,600,000).**
Due to increased processing capacities associated with the Waste Water Phase 2 Upgrade, the City will have the ability to provide increased flows of Re-Use water to the Toana Vista Golf Course and other potential irrigation properties. In order to accommodate the increased flows, the City will need to construct a new 10" line which will in most cases parallel the existing Re-Use line. Additionally, given the age of the existing Re-Use line, the new line will also provide redundancy in the system.

Progress Report: Preliminary Engineering Report has been completed. Project has been submitted to NDEP for funding and is contained in NDEP's funding matrix for clean water projects. FY 2018-2019

11. **FIRE STATION FACILITY – COST ($3,500,000).**
The current Fire Station is located on private land, which the City leases on a yearly basis. The existing facility is limited in size and capability given its initial size and related construction. The community since the construction of this facility has more than quadrupled in size and thus the current and long-term needs of the facility are not being met. The City cannot improve the existing facility given its private ownership. The City has a site prepared next to the City Hall on N. Gene L. Jones Way to accommodate the fire station facility.

Progress Report: Study complete, ready for design. This project to be funded through a conventional medium term obligation, grant resources and potential private funds. FY 2018-2019

12. **ACQUIRE AERIAL PLATFORM CLASS 1 ENGINE 2000 GPM – COST ($925,000).**
At this time, with our existing equipment, it is difficult to reach 30 foot buildings or higher. Evacuation from such roofs of buildings may be necessary in the future and this equipment would facilitate such evacuations. An added benefit to this type of unit is a substantial decrease in insurance.

Progress Report: Study Complete. This project is to be funded through the General Fund, Grant Funds or potential Private Sources. FY 2018-2019

13. **SIDEWALK REHABILITATION PROJECT VARIOUS LOCATIONS – COST ($200,000).**
As infrastructure continues to age, there are areas of pedestrian sidewalk in which normal maintenance is no longer adequate. As such, several areas in the community will be identified where rehabilitation work will take place to properly address safety and access issues.

Progress Report: Identification of specified areas and related costs estimates are underway. This project to be funded through General Fund, RTC and possible CDBG Grant. FY 2018-2019

2019-2020

14. **CONSTRUCT NEW ANIMAL SHELTER – COST ($475,000).**
The current Dog Pound facility does not meet the long-term requirements for our growing community in relation to animal services including veterinarian, boarding, and other pet services. The project will include construction of a new facility on City property, which potentially could include additional public/private partnerships in relation to operation of the facility.

Progress Report: Study complete. Project funded through Ad Valorem Capital Projects Fund and General Fund and possible CDBG Grant in addition to Private Funding. FY 2019-2020

15. **PUBLIC PARK IMPROVEMENTS 3-ACRE TIBBETS BOULEVARD – COST ($500,000).**
The City has ownership of 3 acres of property on the west end of Tibbets Boulevard near several residential areas. The 4-acre parcel is intended for public park development. As of today the City has only one community park (Robert F. Scobie Park) which is located in the eastern portion of the community near U.S. Highway 93A along Wendover Boulevard. Scobie Park is located two miles from the densest area of residential development in the community and nearly three miles from the most western residential developments in the community that are located on the west end of Tibbets Boulevard. Thus the project improves park access.

Progress Report: The City has acquired the identified 3 acres for public park development as part of the City's planning efforts. This project to be funded through General Fund, possible CDBG Grant, participation by West Wendover Recreation District and Private Developers. FY 2019-2020

16. **WASTE WATER SOLAR ARRAY – COST ($400,000).**
The City's new Waste Water Facility was built and able to accommodate the introduction of supplemental electrical power provided via solar array. This would be a similar project to what has been accomplished at the West Wendover City Hall.

Progress Report: Waste Water Upgrade Phase 2 complete. Funding for the project through Department of Energy (DOE) Grant, Sewer Fund. FY 2019-2020

17. **SYCAMORE WATERLINE RELOCATION PROJECT – COST ($560,000).**
This project includes the relocation of approximately 3,100 lineal feet of 16" waterline and related appurtenances to be within the established Sycamore Way Right of Way connecting Pueblo Boulevard to Wendover Boulevard.

Progress Report: Estimates complete. This project is intended to be funded through the Water Enterprise Fund and NDEP. FY 2019-2020

18. **SYCAMORE WAY WATER CONNECTION PROJECT – COST ($45,000).**
This project includes the installation of 400 lineal feet of 8 inch main line to connect several land parcels through an access street to Sycamore.

Progress Report: Estimates complete. This project is intended to be funded through the Water Enterprise Fund and NDEP. FY 2019-2020

2020-2021

19. **WENDOVER REGIONAL MULTI MODAL ENHANCEMENT PROJECT PHASE 1 (N. GENE L. JONES WAY TO US93A) – COST ($4,800,000).**
As traffic frequency and load increase with the growth of the community, areas of Wendover Boulevard will require rehabilitation in order to be able to support vehicle traffic, incorporate safe streets programs and provide for multi-modal enhancements. Phase 1 includes street widening and center islands, bicycle lanes, increased pedestrian access, lighting, street signalization (N. Gene L. Jones Way and Exit 410)

Progress Report: Estimates complete, conceptual programming complete. This project is intended to be funded through General Fund and/or RTC Funds combined with, NDOT and USDOT Funding Programs in addition to Private Funding. FY 2020-2021

20. **WENDOVER REGIONAL MULTI MODAL ENHANCEMENT PROJECT PHASE 2 (AIRPORT TERMINAL IMPROVEMENTS) and REGIONAL AIR SERVICE DEVELOPMENT – COST ($2,250,000).**
With nearly 60,000 annual passenger enplanements, the current airport terminal is in need of intermodal improvements including vehicle parking, bus lanes, and main entrance improvements. Phase 2 will improve efficiency, increase access and provide intermodal capabilities.

Additionally this project contains associated funding with regard to efforts currently underway to establish regional air service (9 to 15 passengers) with a primary route being Wendover to Elko to Reno and return. Additional routes to Las Vegas area also being considered. The City is currently working with Elko Regional Airport, Reno/Tahoe International Airport as well as the Governor's Office on Economic Development (GOED) on assessing ways to institute and fund the air service component.

Progress Report: Estimates complete, conceptual programming complete, funding applications considered. This project is intended to be funded through Wendover Airport/Tooele County, Utah and USDOT Funding Programs in addition to State of Nevada GOED and Private Funding. FY 2020-2021

21. **WENDOVER REGIONAL MULTI MODAL ENHANCEMENT PROJECT PHASE 3 (NEVADA/UTAH STATE LINE) – COST ($1,125,000).**
Phase 3 improvements provide for pedestrian and multi modal enhancements to Wendover Boulevard at the historic boundary between Utah/Nevada located on Wendover Boulevard. Extensive pedestrian flow occurs in this area between to major commercial facilities. The improvements will increase safety by reducing pedestrian and vehicular conflicts in addition to providing multi modal transit options. The project includes street improvements, pedestrian safe-island and historical marker, bicycle lanes, lighting, and other multi-modal transit improvements.

Progress Report: Estimates complete, conceptual programming complete, funding applications in process. This project is intended to be funded through General Fund and/or RTC Funds, NDOT, USDOT, Wendover, Utah Funding Programs in addition to Private Funding. FY 2020-2021

22. **WENDOVER REGIONAL MULTI MODAL ENHANCEMENT PROJECT PHASE 4 (FIRST STREET, MORIAH AVENUE, SOUTH TO AIRPORT TERMINAL – WENDOVER, UTAH) – COST ($2,350,000).**
As traffic frequency and load increase with the growth of the community, streets which connect to Wendover Boulevard will require rehabilitation in order to be able to support vehicle traffic, incorporate safe streets programs and provide for multi-modal enhancements. Phase 4 includes street widening and center islands, bicycle lanes, increased pedestrian access, lighting, and other multi-modal transit improvements along First Street from Moriah Avenue south to the Wendover Airport Passenger Terminal in Wendover, Utah.

Progress Report: Estimates complete, conceptual programming complete, funding applications in process. This project is intended to be funded through USDOT, Wendover, Utah and Wendover Airport/Tooele County Funding Programs in addition to Private Funding. FY 2020-2021

23. **WENDOVER REGIONAL MULTI MODAL ENHANCEMENT PROJECT PHASE 5 (FIRST STREET, MORIAH AVENUE, NORTH TO WENDOVER BOUELVARD – WENDOVER, UTAH) – COST ($1,800,000).**
As traffic frequency and load increase with the growth of the community, streets which connect to Wendover Boulevard will require rehabilitation in order to be able to support vehicle traffic, incorporate safe streets programs and provide for multi-modal enhancements. Phase 5 includes street widening and center islands, bicycle lanes, increased pedestrian access, lighting, and other multi-modal transit improvements along First Street from Moriah Avenue north to Wendover Boulevard in Wendover, Utah.

Progress Report: Estimates complete, conceptual programming complete, funding applications in process. This project is intended to be funded through USDOT, Wendover, Utah and Wendover Airport/Tooele County Funding Programs in addition to Private Funding. FY 2020-2021

24. **WENDOVER REGIONAL MULTI MODAL ENHANCEMENT PROJ PHASE 6 (US93A EAST TO NEVADA/UTAH BORDER [Phase 3 project limits]) – COST ($4,200,000).**
As traffic frequency and load increase with the growth of the community, areas of Wendover Boulevard will require rehabilitation in order to be able to support vehicle traffic, incorporate safe streets programs and provide for multi-modal enhancements. Phase 6 includes street widening and center islands, bicycle lanes, increased pedestrian access, lighting, street intersection signalization (US93A/Wendover Blvd) and other multi-modal transit improvements connecting the Phase 1 and Phase 3 project limits.

Progress Report: Estimates complete, conceptual programming complete, funding applications in process. This project is intended to be funded through General Fund and/or RTC Funds, NDOT and USDOT Funding Programs in addition to Private Funding. FY 2020-2021

25. **ACQUISITION OF BLM LAND FOR CITY CENTER/DOWNTOWN DEVELOPMENT – COST ($3,000,000).**
The City's master plan calls for commercial uses to be introduced into the new City Center/Downtown Area for diversification of commercial/retail. This requires the City to purchase the City Center property currently held by a Recreation and Public Purposes Lease with the Bureau of Land Management (BLM). This acquisition would be based upon completion of appropriate BLM processes including fair market value purchase. With the land acquired, the City would be able to conduct long-term leases and/or property sales for commercial development of appropriate locations in the City Center area, thus continuing with the master plan for the area.

Progress Report: Planning Completed for Land Use. Coordination with BLM on project initiation underway. Funding by General Fund and/or Public –Private Partnerships. FY 2020-2021

26. **REHABILITATION OF WENDOVER BOULEVARD (PUEBLO BOULEVARD TO OLA GRADE INTERCHANGE PHASE 1) – COST ($700,000).**
As traffic frequency and load increase with the growth of the community, Wendover Boulevard will require rehabilitation in order to be able to support vehicle traffic without complete degradation of the street substructure. The project would consist of appropriate rehabilitation work including roto-milling, new pavement as well as appropriate striping along 3,600 lineal feet of Wendover Boulevard.

Progress Report: Preliminary estimation complete. This project to be funded through General Fund and RTC Funds. FY 2020-2021

27. **LEPPY HILLS TRAILS ADDITION (EXPANSION OF EXISTING TRAIL SYSTEM) – COST ($750,000).**
The City has completed the construction of the initial Leppy Hills Trail System containing three loops of hardpack trail for public non-motorized recreation use. These three loops contain approximately 8 miles of trail. Through the existing Recreation and Bicycle Plan expansion of the trail would be considered in the future. Current facility receives great use by the public lending to the potential of continuing with plan expansions including additional 5 mile of hardpack trail.

Progress Report: Initial Planning Complete, Grant Fund Submittal Pending. The project would be funded through the General Fund and a Grant from Nevada State Lands. FY 2020-2021

28. **CITY PUBLIC FACILITIES (MEDICAL, EDUCATIONAL, AMPHITHEATER, PARKS, ENTERTAINMENT, TOURISM AND COMMERCIAL RELATED (MULTI-PHASING) – TOTAL COST ($20,540,000).**
The City is proceeding with planned development initiatives, including infrastructure (collector, arterial streets and utility services) and facilities as part of the City's Downtown Plan, Tourism Development as well as Community Service Needs. This area would include additional public facilities and attractions meeting the needs of the growing community and business district. The property is part of the "City Center/Downtown Area" containing approximately 125 acres along Wendover Boulevard.

Progress Report: The City has completed studies for the provisions of future public infrastructure and facility projects that may be located in the City Center/Downtown Area. Construction of the new City Hall is complete along with the City Center Monument and the Victory Highway Historic Interpretive Walking Trail. A community needs survey and related planning and preliminary architectural work has been completed on a Community Center that would contain: Library, senior center, youth facilities and public meeting spaces. This work was funded through a private grant. Expansion of current medical facilities is being considered along with other public facilities, which may in part be funded through private sources in addition to several bonding sources and/or grant/loan funds such as USDA-RD. FY 2020-2021

29. **REHABILITATION OF WENDOVER BOULEVARD (PUEBLO BOULEVARD TO OLA GRADE INTERCHANGE PHASE 2) – COST ($850,000).**
As traffic frequency and load increase with the growth of the community, Wendover Boulevard will require rehabilitation in order to be able to support vehicle traffic without complete degradation of the street substructure. The project in Phase 2 would consist of appropriate rehabilitation work including roto-milling, new pavement as well as appropriate striping along 3,600 lineal feet of Wendover Boulevard.

Progress Report: Preliminary estimation complete. This project to be funded through General Fund and RTC Funds. FY 2020-2021

30. **REHABILITATION OF WENDOVER BOULEVARD (PUEBLO BOULEVARD TO OLA GRADE INTERCHANGE PHASE 3) – COST ($950,000).**
As traffic frequency and load increase with the growth of the community, Wendover Boulevard will require rehabilitation in order to be able to support vehicle traffic without complete degradation of the street substructure. The project, Phase 3, would consist of appropriate rehabilitation work including roto-milling, new pavement as well as appropriate striping along 3,600 lineal feet of Wendover Boulevard.

Progress Report: Preliminary estimation complete. This project to be funded through General Fund and RTC Funds. FY 2020-2021

31. **INFRASTRUCTURE NORTH INTERSTATE 80 EXIT #410, PHASE 3 – COST ($550,000).**
The City of West Wendover is proceeding with planned development initiatives, which include infrastructure (collector street and utility services) on the north side of Exit #410 of Interstate 80. This area includes retail development such as box retail stores, restaurants and gas service stations in addition to hotel/motel construction. The infrastructure would establish necessary public improvements for this area. In particular Phase 3 includes pedestrian enhancements for the Exit 410 area including to Wendover Boulevard.

Progress Report: Funding sources would include General Fund, City RTC Funds as well as NDOT Grant Funds and Private Resources. FY 2020-2021

32. **ACQUISITION OF AIR FORCE PROPERTY PHASE 1 (PORT OF WEST WENDOVER) INCLUDING ANNEXATION– COST ($6,100,000).**
The City of West Wendover has adopted the development plan for the first 3,000 of 15,000 acres of U.S.A.F. Property to be developed as the Port of West Wendover. This will be an economic diversification project for the City and will include: Manufacturing, aeronautical, warehousing, foreign trade zone, commercial and overlay zones. The City has adopted plans for the enlargement of its boundaries. The new boundaries will incorporate properties currently under acquisition as part of this project as well as other private property. The new City Limits would incorporate some 22,000 acres. This project also includes the necessary environmental work needed by the Air Force, for conveyance of the property.

Progress Report: U.S. Public Law 107-314 signed into law on December 2, 2002 authorizes the conveyance of approximately 15,000 acres of property to the City of West Wendover, Nevada and Tooele County, Utah. Phase 1 of the 15,000-acre conveyance is now nearing completion as the U.S. Air Force and has completed their clearances and has transferred the Phase 1 property to the Department of Interior (BLM) for conveyance to the City. BLM is in process of review for conveyance. Approximately 6,500 acres with be included in the Phase 1 conveyance. The remaining 8,500 acres will take an additional 8 to 10 years to complete with funding and use determinations by the Department of Defense. The City Council has adopted an annexation plan. Funding by the Federal Government and General Fund. FY 2020-2021

33. **INFRASTRUCTURE PUEBLO BOULEVARD/TIBBETS BOULEVARD EXTENSIONS – COST ($7,800,000).**
The City of West Wendover is proceeding with planned development initiatives, which include infrastructure (collector and arterial streets and utility services) for the extension of Tibbets Boulevard and Pueblo Boulevard. This area includes commercial development such as hotel/resorts, general retail and residential development in addition to ancillary commercial services. The infrastructure would establish necessary public improvements for this area including the linking of residential development in the southern portion of the city to those in the north.

Progress Report: The City has completed the studies necessary to identify the infrastructure required for future development in the western portions of the City Limits. Funding sources would include several bonding sources as well as private partnerships. FY 2020-2021

34. **PORT OF WEST WENDOVER, PHASE 1 INFRASTRUCTURE – COST ($14,000,000).**
The Port of West Wendover is currently being created through the acquisition of over 15,000 acres of property currently under control of the United States Air Force. Phase 1 of this conveyance is nearing completion. This project will include a first phase of infrastructure needed for development of the properties located within the port, which include: Commercial, Manufacturing, Foreign Trade Zone, Bonded Warehousing and others. The master plan for the port was completed in 2001.

Progress Report: Under Study for funding by City Bond, Developers, RTC, NDOT, FAA and others. FY 2020-2021

35. **FLORENCE WAY UPGRADE AND RELOCATION (SOUTH FLORENCE WAY) PHASE 4 (LAGUNA DRIVE WEST 3,000 FEET) – COST ($850,000).**
This project consists of constructing an additional segment to Florence Way Phase 3, paralleling the Union Pacific Railroad (UPRR). Completion would be four travel lanes, two bike lanes, appropriate curb, gutter and sidewalk and a protective fence along recreational properties; currently non-existent.

Progress Report: Under Study for City Bond, RTC Funding. FY 2020-2021

36. **ANNEXATION OF BLM PROPERTY – COST ($375,000)**
The City of West Wendover has adopted the plans for the enlargement of the City's boundaries. The new City boundaries will incorporate current federal lands into the City boundary. The new City Limits would incorporate some 96,000 acres of property.

Progress Report: City Council approved annexation plan 2000. Project funded through the General Fund. FY 2020-2021

<End>

Attachment Q

Public Participation Documentation

Documents included:

- Notice of Public Hearing August 02, 2022, Agenda and Minutes
- Notice of Public Hearing September 06, 2022, Agenda and Minutes
- Notice of Public Hearing November 01, 2022, Agenda and Minutes

ELKO DAILY FREE PRESS

3720 Idaho St. Elko, Nev. 89801 (775) 738-3118

Affidavit of Publication

I, Seana K. Chapman, Legal Clerk of the *Elko Daily Free Press*, published daily at Elko, Nevada, do solemnly swear that a copy of **NOTICE/STATE CDBG APPLICATION**, as per clipping attached, was published on **July 19, 2022,** in the regular and entire issue of the above said newspaper, with general circulation of Elko and Lander counties, and not in any supplement thereof, for **ONE (1)** week commencing with the issue dated **July 19, 2022**, and ending with the issue dated as **July 19, 2022,** with no subsequent publications being made.

NOTICE OF PUBLIC HEARING FOR DISCUSSION OF POSSIBLE STATE CDBG APPLICATION

NOTICE IS HEREBY GIVEN that the City of West Wendover will conduct a public hearing on **August 2, 2022 at 7:05 p.m. at the West Wendover City Hall, Council Chambers #137** in order to discuss possible applications for funding under the State Community Development Block Grant (CDBG) Program and to solicit citizen input on possible activities to be included in the application. All persons may attend and be heard. Prior to the hearing, written comments may be filed with the West Wendover City Clerk and will be considered at the meeting.

Eligible Priority Activities Under the Above Allocation Consist of: Public Facility and Public Improvements Projects, Planning Studies, Economic Development Business Assistance and Microenterprise Activities.

The Community Development Block Grant Program, (CDBG) is a Federally Funded Program that is administered by the State of Nevada. The national objectives of this program are:

1. To benefit the low and moderate-income persons.
2. To aid in the prevention of and elimination of slums or blight.
3. To meet the Community Developments needs of having a particular urgency when other sources of funding are not available.

In addition, it is the State's goal to give extra consideration to projects addressing documented public health or safety needs or needs identified through a Community Planning Process.

The purpose of this public hearing is to provide information about the CDBG program, past projects that have been funded in the City of West Wendover, how the application process, eligibility requirements, how and where funds can be used, and to give citizens an opportunity to make their comments known regarding what types of eligible activities the City of West Wendover should apply for under the State CDBG program. A second public hearing will be held to discuss proposed projects under consideration. A final hearing will be held to discuss, approve and rank applications prior to submittal to the State.

If you are unable to attend the public hearing, written comments may be directed to the City of West Wendover, P.O. Box 2825, West Wendover, Nevada 89883, or you may telephone Anna Bartlome at 775-664-3081. In addition, information is available for review at the City offices (1111 N. Gene L. Jones Way) and is available for public inspection during normal business hours, from August 2, 2022 to November 1, 2022.

The City of West Wendover promotes fair housing and makes all its programs available to low and moderate income families regardless of age, race, color, relation, sex, national origin, sexual preference, marital status or handicap. The City of West Wendover does not discriminate on the handicapped status in the admission of access to, treatment, employment or activities in it's federally assisted programs.

Persons with disabilities who require special accommodations or assistance at the meeting should notify the City Clerks Office at 775-664-3081 or at 1111 N. Gene L. Jones Way, West Wendover, Nevada, 89883.

This notice is posted at the following locations:
West Wendover City Hall, West Wendover Library, Smith's Food & Drug, Nevada Post Office

Posted/Published: July 19, 2022

Seana K. Chapman

Subscribed and sworn to before me, on July 20, 2022.

Notary Public

State of Nevada

County of Elko

NICHOLE MOURITSEN
Notary Public, State of Nevada
Appointment No. 18-1035-6
My Appt. Expires Jan 13, 2026

AFFIDAVIT OF PUBLICATION

STATE OF Nevada
County of Elko } **SS**

I, Deeanna Croasmun, being first duly sworn, depose and say that I am the Editor of The Wendover Times, a weekly newspaper of general circulation published each Thursday at the City of West Wendover, Elko County, Nevada; that the notice attached hereto and which is part of the affidavit of publication of

Legal Notice
City of West Wendover
CDBG Public Hearing

was published in said newspaper for 1 issue(s), the first publication having been made on the 14th day of July, 2022, and ~~the last on the _____ day of _____, 20___~~;

that said notice was published in the regular and entire issue of every paper during the period and time of publication, and the same was published in a newspaper proper and not in a supplement.

Deeanna Croasmun

Deeanna Croasmun

Subscribed and sworn to me this 29th day of July, 2022

Chandi D Hernandez

Notary Public

CHANDI DAWN HERNANDEZ
NOTARY PUBLIC
STATE OF NEVADA
Appt. No. 14-15459-6
My Appt. Expires October 2, 2022

FINANCIAL

Wesley Financial Group, LC. Timeshare Cancellation Experts. Over 50,000,000 in timeshare debt and fees cancelled in 2019. Get free information package and learn how to get rid of your timeshare! Free consultations. Over 450 positive reviews. Call 888-912-8289

STOP worrying! SilverBills eliminates the stress and hassle of bill payments. All household bills guaranteed to be paid on time, as long as appropriate funds are available. Computer not necessary. Call for a FREE trial or a custom quote today. SilverBills 1-866-472-0947

ARD/LANDSCAPING

Eliminate gutter cleaning forever! LeafFilter, the most advanced debris-blocking gutter protection. Schedule a FREE LeafFilter estimate today. 5% off Entire Purchase. 10% Senior & Military Discounts. Call 1-844-909-0398

METAL BUILDINGS

Panels, Pre-engineered Metal Buildings. Mill prices for sheeting coil are at a 4 year low. You get the savings. 17 Colors prime material, cut to your exact length. NO Building Systems 1-800-COBLDGS

HEALTH & NUTRITION

Looking for assisted living, memory care, or independent living? A Place for Mom simplifies the process of finding senior living at no cost to your family. Call 1-877-781-7424 today!

Hoe Care Health, medical alert system. The most advanced medical alert product on the market. Voice-activated! No wi-fi needed! Special offer call and mention offer code CARE20 to get $20 off Mobile Companion. Call today 1-866-994-9842 (NVCAN)

MobileHelp, America's Premier Mobile Medical Alert System. Whether You're Home or Away. For Safety and Peace of Mind. No Long Term Contracts! Free Brochure! Call Today! 1-866-630-0367 (NVCAN)

Portable Oxygen Concentrator May Be Covered by Medicare! Reclaim independence and mobility with the compact design and long-lasting battery of Inogen One. Free information kit! Call 877-691-4639

PETS/LIVESTOCK

Use Happy Jack® Kenel Dip as an area spray to control lyme disease ticks, fleas, stable flies &

LEGAL NOTICE

NOTICE OF PUBLIC HEARING FOR DISCUSSION OF POSSIBLE STATE CDBG APPLICATION

NOTICE IS HEREBY GIVEN that the City of West Wendover will conduct a public hearing on **August 2, 2022 at 7:05 p.m. at the West Wendover City Hall, Council Chambers #137** in order to discuss possible applications for funding under the State Community Development Block Grant (CDBG) Program and to solicit citizen input on possible activities to be included in the application. All persons may attend and be heard. Prior to the hearing, written comments may be filed with the West Wendover City Clerk and will be considered at the meeting.

Eligible Priority Activities Under the Above Allocation Consist of: Public Facility and Public Improvements Projects, Planning Studies, Economic Development Business Assistance and Microenterprise Activities.

The Community Development Block Grant Program, (CDBG) is a Federally Funded Program that is administered by the State of Nevada. The national objectives of this program are:

1. To benefit the low and moderate-income persons.
2. To aid in the prevention of and elimination of slums or blight.
3. To meet the Community Developments needs of having a particular urgency when other sources of funding are not available.

In addition, it is the State's goal to give extra consideration to projects addressing documented public health or safety needs or needs identified through a Community Planning Process.

The purpose of this public hearing is to provide information about the CDBG program, past projects that have been funded in the City of West Wendover, how the application process, eligibility requirements, how and where funds can be used, and to give citizens an opportunity to make their comments known regarding what types of eligible activities the City of West Wendover should apply for under the State CDBG program. A second public hearing will be held to discuss proposed projects under consideration. A final hearing will be held to discuss, approve and rank applications prior to submittal to the State.

If you are unable to attend the public hearing, written comments may be directed to the City of West Wendover, P.O. Box 2825, West Wendover, Nevada 89883, or you may telephone Anna Bartlome at 775-664-3081. In addition, information is available for review at the City offices (1111 N. Gene L. Jones Way) and is available for public inspection during normal business hours, from August 2, 2022 to November 1, 2022.

The City of West Wendover promotes fair housing and makes all its programs available to low and moderate income families regardless of age, race, color, relation, sex, national origin, sexual preference, marital status or handicap. The City of West Wendover does not discriminate on the handicapped status in the admission of access to, treatment, employment or activities in it's federally assisted programs.

Persons with disabilities who require special accommodations or assistance at the meeting should notify the City Clerks Office at 775-664-3081 or at 1111 N. Gene L. Jones Way, West Wendover, Nevada, 89883.

This notice is posted at the following locations:

West Wendover City Hall, West Wendover Library, Smith's Food &Drug, Nevada Post Office

PUBLISHED BY THE WENDOVER TIMES ON JULY 14, 2022

NOTICE-THE WENDOVER TIMES DOES NOT ENDORSE, PROMOTE OR ENCOURAGE THE PURCHASE OR SALE OF ANY PRODUCT OR SERVICE ADVER-

CITY OF WEST WENDOVER
P.O. Box 2825 • 1111 N. Gene L. Jones Way • West Wendover, NV 89883
Office (775) 664-3081 Fax (775) 664-3720

PUBLIC NOTICE PUBLIC NOTICE PUBLIC NOTICE

WEST WENDOVER CITY COUNCIL, REGULAR MEETING

DATE: August 02, 2022
TIME: 7:00 PM

LOCATION:Council Chambers #137, West Wendover City Hall

(THE MAYOR OR MAYOR PRO-TEM RESERVES THE RIGHT TO CHANGE THE ORDER OF THE AGENDA AND IF THE AGENDA IS NOT COMPLETE, TO RECESS THE MEETING AND CONTINUE ON ANOTHER SPECIFIED DATE AND TIME)

(IN THE EVENT THAT PUBLIC COMMENT IS ALLOWED DURING ANY AGENDA ITEM, THE MAYOR OR MAYOR PRO-TEM RESERVES THE RIGHT TO LIMIT SUCH COMMENT AND TERMINATE ANY FURTHER COMMENT)

(EACH SPEAKER, AFTER BEING ACKNOWLEDGED BY THE CHAIR, SHALL COME TO THE PODIUM AND IF REQUIRED FILL OUT A REQUEST TO SPEAK FORM, THEN WILL SPEAK DIRECTLY INTO THE MICROPHONE, AND STATE THEIR NAME, RESIDENCY AND ANY ORGANIZATION THEY ARE REPRESENTING FOR THE RECORD.)

(THESE PROCEEDINGS ARE BEING VIDEO RECORDED. THE COUNCIL MEETINGS CAN BE VIEWED ON THE INTERNET AT www.westwendovercity.com WITHIN 24 HOURS OF THE END OF THE MEETING.)

AGENDA

1. **CALL TO ORDER AND ROLL CALL**

   a. **Roll Call**

2. **PLEDGE OF ALLEGIANCE**

3. **COMMENTS FROM THE GENERAL PUBLIC**

   Requires a sign in sheet and request of the Council to speak, limitation of three minutes.

4. **APPROVAL OF THE MINUTES (For Possible Action)**

   a. **City Council - Regular Meeting - Jul 19, 2022 7:00 PM**

5. **PUBLIC HEARING**

   NOTICE IS HEREBY GIVEN that the City of West Wendover will conduct a public hearing on August 2, 2022 at 7:05 p.m. at the West Wendover City Hall, Council Chambers #137 in order to discuss possible applications for funding under the State Community Development Block Grant (CDBG) Program and to solicit citizen input on possible activities to be

included in the application. All persons may attend and be heard. Prior to the hearing, written comments may be filed with the West Wendover City Clerk and will be considered at the meeting.

Eligible Priority Activities Under the Above Allocation Consist of: Public Facility and Public Improvements Projects, Planning Studies, Economic Development Business Assistance and Microenterprise Activities.

The Community Development Block Grant Program, (CDBG) is a Federally Funded Program that is administered by the State of Nevada. The national objectives of this program are:

1. To benefit the low and moderate-income persons.
2. To aid in the prevention of and elimination of slums or blight.
3. To meet the Community Developments needs of having a particular urgency when other sources of funding are not available.

In addition, it is the State's goal to give extra consideration to projects addressing documented public health or safety needs or needs identified through a Community Planning Process.

The purpose of this public hearing is to provide information about the CDBG program, past projects that have been funded in the City of West Wendover, how the application process, eligibility requirements, how and where funds can be used, and to give citizens an opportunity to make their comments known regarding what types of eligible activities the City of West Wendover should apply for under the State CDBG program. A second public hearing will be held to discuss proposed projects under consideration. A final hearing will be held to discuss, approve and rank applications prior to submittal to the State.

If you are unable to attend the public hearing, written comments may be directed to the City of West Wendover, P.O. Box 2825, West Wendover, Nevada 89883, or you may telephone Anna Bartlome at 775-664-3081. In addition, information is available for review at the City offices (1111 N. Gene L. Jones Way) and is available for public inspection during normal business hours, from August 2, 2022 to November 1, 2022.

The City of West Wendover promotes fair housing and makes all its programs available to low and moderate income families regardless of age, race, color, relation, sex, national origin, sexual preference, marital status or handicap. The City of West Wendover does not discriminate on the handicapped status in the admission of access to, treatment, employment or activities in it's federally assisted programs.

Persons with disabilities who require special accommodations or assistance at the meeting should notify the City Clerks Office at 775-664-3081 or at 1111 N. Gene L. Jones Way, West Wendover, Nevada, 89883.

Hearing to Receive Input with Regards to CDBG Program

6. NEW BUSINESS

a. Discussion and Decision to Approve the Conceptual/Preliminary Site Plan for Deep Roots Harvest, Inc. Facility Located at 1155 Industrial Way and Other Matters Appropriately Related Thereto (For Possible Action)

Report By City Manager

Review/Comment/Action: City Council

b. **Discussion and Decision for Approval or Denial of an Updated Liquor License for Lee's Discount Liquor / Nami Lee & Sun Lee and Other Matters Appropriately Related Thereto (For Possible Action)**

Report By Police Chief

Review/Comment/Action: City Council

7. **DEPARTMENT REPORTS**

1. **Fire Chief**
2. **Police Chief**
3. **City Clerk/Records Officer**
4. **Chief Financial Officer**
5. **Public Works Director**
6. **City Manager**

8. **COMMUNICATIONS**

Reports by Elected Officials

9. **APPROVAL OF THE CLAIMS**

a. **Claims for August 2, 2022 (For Possible Action)**

10. **COMMENTS FROM THE GENERAL PUBLIC**

Requires a sign in sheet and request of the Council to speak, limitation of three minutes.

11. **NEXT MEETING DATE AND ADJOURNMENT**

a. **Adjournment (For Possible Action)**

This notice is posted at the following locations:
West Wendover City Hall, West Wendover Library,
Smith's Food & Drug, Nevada Post Office

Members of the public who are disabled and require special accommodations or assistance at the meeting are requested to notify the City Clerk in writing at the City of West Wendover, 1111 N. Gene L. Jones Way, P.O. Box 2825, West Wendover, Nevada, or by calling (775) 664-3081.

CITY OF WEST WENDOVER
P.O. Box 2825 • 1111 N. Gene L. Jones Way • West Wendover, NV 89883
Office (775) 664-3081 Fax (775) 664-3720

PUBLIC MEETING NOTICE

The West Wendover City Council will meet in a regular session on August 2, 2022, at the West Wendover City Hall, Council Chambers Room #137 at 7:00 p.m. Attached with this notice is the agenda for said meeting of the Council. This notice is posted pursuant to N.R.S. 241 020 as amended by the 1997 Legislature. This notice is posted at the following places no later than July 28, 2022.

WEST WENDOVER CITY HALL
WEST WENDOVER BRANCH LIBRARY
SMITH'S FOOD & DRUG STORE
WEST WENDOVER POST OFFICE

NOTICE TO PERSONS WITH DISABILITIES

Members of the public who are disabled and require special accommodations or assistance at the meeting are requested to notify the City Clerk in writing at the City of West Wendover, 1111 N. Gene L. Jones Way, P.O. Box 2825, West Wendover, Nevada, or by calling (775) 664-3081.

CITY OF WEST WENDOVER
P.O. Box 2825 • 1111 N. Gene L. Jones Way • West Wendover, NV 89883
Office (775) 664-3081 Fax (775) 664-3720

WEST WENDOVER CITY COUNCIL, MINUTES OF THE REGULAR MEETING OF AUGUST 02, 2022

1. CALL TO ORDER AND ROLL CALL

Attendee Name	Title	Status	Arrived
Kathy Durham	Councilwoman	Present	
Nick Flores	Councilman	Present	
Izzy Gutierrez	Councilman	Present	
Jasie Holm	Councilwoman	Present	
Robert Trujillo	Councilman	Present	
Daniel J. Corona	Mayor	Present	
Cal Kunz	Chief of Police	Present	
Chris Melville	City Manager	Present	
Debbie Sanchez	Chief Financial Officer	Absent	
Jeff Knudtson	Fire Chief	Present	
Raul Naranjo	Public Works Director	Present	
Anna Bartlome	City Clerk/Records Officer	Present	

Others Present: Mike Katsonis and Antonio Sanchez

Mayor Corona called the meeting to order at 7:00 p.m. in the West Wendover City Hall, Council Chambers #137. All those present and excused are noted above.

2. PLEDGE OF ALLEGIANCE

Mayor Corona led those present in the Pledge of Allegiance.

3. COMMENTS FROM THE GENERAL PUBLIC

None offered or received.

4. APPROVAL OF THE MINUTES (For Possible Action)

a. City Council - Regular Meeting - Jul 19, 2022 7:00 PM

Council Member Holm made a motion to approve the minutes of the regular meeting of July 19, 2022. The motion was seconded by Council Member Trujillo and passed unanimously.

Agenda taken out of order, New Business item a heard next, see below.

RESULT:	**ACCEPTED [UNANIMOUS]**
MOVER:	Jasie Holm, Councilwoman
SECONDER:	Robert Trujillo, Councilman
AYES:	Durham, Flores, Gutierrez, Holm, Trujillo

5. PUBLIC HEARING

NOTICE IS HEREBY GIVEN that the City of West Wendover will conduct a public hearing on August 2, 2022 at 7:05 p.m. at the West Wendover City Hall, Council Chambers #137 in order to discuss possible applications for funding under the State Community Development Block Grant (CDBG) Program and to solicit citizen input on possible activities to be included in the application. All persons may attend and be heard. Prior to the hearing, written comments may be filed with the West Wendover City Clerk and will be considered at the meeting.

Eligible Priority Activities Under the Above Allocation Consist of: Public Facility and Public Improvements Projects, Planning Studies, Economic Development Business Assistance and Microenterprise Activities.

The Community Development Block Grant Program, (CDBG) is a Federally Funded Program that is administered by the State of Nevada. The national objectives of this program are:

1. To benefit the low and moderate-income persons.
2. To aid in the prevention of and elimination of slums or blight.
3. To meet the Community Developments needs of having a particular urgency when other sources of funding are not available.

In addition, it is the State's goal to give extra consideration to projects addressing documented public health or safety needs or needs identified through a Community Planning Process.

The purpose of this public hearing is to provide information about the CDBG program, past projects that have been funded in the City of West Wendover, how the application process, eligibility requirements, how and where funds can be used, and to give citizens an opportunity to make their comments known regarding what types of eligible activities the City of West Wendover should apply for under the State CDBG program. A second public hearing will be held to discuss proposed projects under consideration. A final hearing will be held to discuss, approve and rank applications prior to submittal to the State.

If you are unable to attend the public hearing, written comments may be directed to the City of West Wendover, P.O. Box 2825, West Wendover, Nevada 89883, or you may telephone Anna Bartlome at 775-664-3081. In addition, information is available for review at the City offices (1111 N. Gene L. Jones Way) and is available for public inspection during normal business hours, from August 2, 2022 to November 1, 2022.

The City of West Wendover promotes fair housing and makes all its programs available to low and moderate income families regardless of age, race, color, relation, sex, national origin, sexual preference, marital status or handicap. The City of West Wendover does not discriminate on the handicapped status in the admission of access to, treatment, employment or activities in it's federally assisted programs.

Persons with disabilities who require special accommodations or assistance at the meeting should notify the City Clerks Office at 775-664-3081 or at 1111 N. Gene L. Jones Way, West Wendover, Nevada, 89883.

Mayor Corona closed the regular portion of the meeting and opened the public hearing portion of the meeting.

Chris Melville went through his presentation regarding the CDBG Program, which is as follows:

- What is the CDBG Program?
    - The Community Development Block Grant (CDBG) program, administered by the Department of Housing & Urban Development (HUD), is a flexible program that provides communities with resources to address a wide range of unique community development needs. The program was initiated in 1982.
- How is the program funded?
    - HUD program funding is provided via the budgeting process of the federal government. The funds are provided to states to administer through their own developed program with HUD supervision or certain qualified cities directly (entitled communities) which report directly to HUD. In Nevada there are 6 entitlement communities. **The CDBG program has been eyed several times in recent federal budgets to be discontinued.*
- What is the amount of funds available to Nevada?
    - Under the Nevada state run program (also referred to as the rural program) generally in recent years, there has been approximately $3 to $3.5 million per year to fund projects and administer the program.
    - In the 2022 selection process there were 21 applications totaling nearly $5 million in requests. CDBG historically is able to fund only ½ of requests made.
- What activities are eligible for funding?
    - The program is meant to fund projects which benefit the low-moderate income persons (West Wendover has a 70% LMI). With 26 eligible entities in the state, we are 1 of 4 communities in the program which qualify "community-wide". Thus, we are not required to conduct income surveys for projects wot which we submit given the community-wide designation by HUD.
    - The program can aid in the prevention and elimination of slums or blight.
    - Fund projects which meet Community Development needs which have urgency with other sources not available. (i.e. a water storage tank failure as a result of a natural disaster, stopping potable water flow to a community).

- Finally GOED has provided extra consideration to projects which address public health/safety or have been identified through a community planning process. *why we do the planning work*

- Are any activities considered anti-displacement? 24 CFR 570.488
  - The answer is no. This concerns the responsibility as a recipient that we have taken reasonable steps with regard to any funded project to minimize the displacement of persons (families, individuals, businesses, nonprofit organizations, and farms).
- What is our history with the CDBG Program?
  - Summary of Past Performance - 1995 to Present
    - 23 project applications submitted, 16 projects funded (70%)
    - Total Investment in West Wendover: $13,199,837.00
    - Total Nevada CDBG Commitment: $2,330,000.00 (18%)
  - Project Types:
    - Infrastructure: Streets enhancements, safe routes to schools, pedestrian enhancements, lighting, beautification, medical building enhancements
    - Public Safety: Emergency well-field generators, police dispatch system, medical x-ray equipment
    - Planning: Community needs assessment, economic development strategy plan, water/sewer master plan
- Receiving input and ideas for eligible projects
  - Over the next month receive input:
    - Contact: Chris Melville, City Manager at 775-664-3081 or in person
  - **Some projects currently being reviewed*
- Schedule
  - September 6th City Council Meeting
    - Second public meeting, review project concepts, estimated costs, and beneficiaries
    - Any additional project ideas meeting eligibility
    - Submit eligibility projects to CDBG
  - November 1st City Council Meeting
    - Final public meeting, projects selection for application. Applications due February 17, 2023

Council Member Durham stated that the first time she attended the National League of Cities conference she was given the talking point of the importance of the CDBG program.

There being no public comment Mayor Corona closed the public hearing and opened the regular portion of the meeting.

Hearing to Receive Input with Regards to CDBG Program

6. NEW BUSINESS

a. Discussion and Decision to Approve the Conceptual/Preliminary Site Plan for Deep Roots Harvest, Inc. Facility Located at 1155 Industrial Way and Other Matters Appropriately Related Thereto (For Possible Action)

Report By City Manager

Review/Comment/Action: City Council

Chris Melville explained that this was the conceptual/preliminary site plan for the Deep Roots pilot project for the cultivation and production. Chris explained that included in the packet was his memo with the drawings which are well beyond a conceptual/preliminary approval point and closer to a final. Chris explained that at the next meeting there will be on the agenda a final site plan approval for the project. Chris stated that the project had been quite for a while but he believes it was because they were working on the modular part of the project. Chris stated that the plans have been submitted to WC3 for review.

Mayor Corona asked if there will still be enough time to get something started for their licensing deadline of February 2023. Chris stated he cannot say but he would think that they would have enough time to get something completed by that time.

Council Member Trujillo made a motion to approve the conceptual/preliminary site plan for Deep Roots Harvest, Inc., facility located at 1155 Industrial Way. The motion was seconded by Council Member Holm and passed unanimously.

Agenda taken back in order, Public Hearing heard next, see above.

RESULT:	**APPROVED [UNANIMOUS]**
MOVER:	Robert Trujillo, Councilman
SECONDER:	Jasie Holm, Councilwoman
AYES:	Durham, Flores, Gutierrez, Holm, Trujillo

b. Discussion and Decision for Approval or Denial of an Updated Liquor License for Lee's Discount Liquor / Nami Lee & Sun Lee and Other Matters Appropriately Related Thereto (For Possible Action)

Report By Police Chief

Review/Comment/Action: City Council

Cal Kunz explained that he is presenting the updated liquor license for Lee & Wendover dba Lee's Discount Liquor for Nami Lee and Sun Lee. Cal stated that there was nothing in the background that would exclude the applicants from consideration for a liquor license.

Council Member Gutierrez made a motion to approve the updated liquor license for Lee's Discount Liquor / Nami Lee and Sun Lee. The motion was seconded by Council Member Durham and passed unanimously.

RESULT:	**APPROVED [UNANIMOUS]**
MOVER:	Izzy Gutierrez, Councilman
SECONDER:	Kathy Durham, Councilwoman
AYES:	Durham, Flores, Gutierrez, Holm, Trujillo

7. DEPARTMENT REPORTS

1. Fire Chief

Jeff Knudtson had nothing to add to his memo.

2. Police Chief

Cal Kunz had nothing to add to his memo.

3. City Clerk/Records Officer

Anna Bartlome had nothing to add to her memo.

4. Chief Financial Officer

5. Public Works Director

Raul Naranjo had nothing to add to his memo.

6. City Manager

Chris Melville went through his memo which included an update on the Downtown Development Phase 1 Project. The contracts for the Downtown Development Project are currently in the hands of Great Basin Engineering and should have them back within the next week. Chris stated that there have been meetings with CORE/TSK regarding the Fire Station project and the team was provided a new outline based on costs that have been provided. The TA Travel Center should be on the next agenda for a final site plan approval and there were a few comments from NDOT that we are awaiting comments on. The items waiting for information from NDOT include the traffic study drainage report and the tie in of the existing frontage road. Chris explained that TA Travel Center is in talks with Wells Rural Electric about moving the powerline on the property. Chris explained that Vertical Horizon has hired a new management team and are working on completing the plans for their facilities. Chris stated that he has not heard anything from Wendovera since May. Chris stated that on the Congressional Direct Spending Grants it looks like the Public Safety Interoperability and Clinic Digital X-ray Upgrade look to be awarded sometime this month. Chris stated that the BLM EA on Phase 1 of the Air Force Property Conveyance will closed on August 14th and once BLM has comments they will proceed with a decision. Chris stated that the mineral reports on the Air Force Property are also being wrapped up. Chris stated that his memo included a brief on development long term and some of the issues the City has had to overcome to do things (water capacity, waste water capacity and land availability) and things that still need to be done (natural gas and power).

Chris Melville explained that there was a plaque for Mayor Corona on his years of service. The plaque reads as follows:

Presented to

Daniel J. Corona

Mayor

2016-2022

In Recognition of Your

Years of Dedicated Service

To the City of West Wendover

In Serving the Interests of the Public

&

In Exercising the Duties So Entrusted to You

Mayor Pro-tem Gutierrez and Council Members presented Mayor Corona with his plaque.

8. COMMUNICATIONS

Reports by Elected Officials

Council Member Holm thanked Chris Melville for all his presentation and all the work that goes into the projects as everything is constantly changing and evolving. Council Member Holm thanked the Department Heads for all they do. Council Member Holm stated that she thinks that Mayor Corona will do great in whatever you do.

Council Member Trujillo thanked the Department Heads for all they do and Chris Melville for his work on the presentation and keeping them up to date. Council Member Trujillo wished Mayor Corona good luck and stated that West Wendover has had some great Mayors and you are one of them.

Council Member Flores thanked the Department Heads for all their hard work. Council Member Flores stated that when Mayor Corona was elected in 2016 it was an uncertain thing for West Wendover and being on the Council at that time for two years he did not know what was going to happen. Council Member Flores stated that over the years there have been some disagreements but we are able to move forward and work great together. Council Member Flores stated that with your (Mayor Corona) tenacity and ambition cannot be overlooked as he and his family appreciates you. Council Member Flores thanked Mayor Corona from the bottom of his heart for being so dedicated to the city.

Council Member Gutierrez thanked the Department Heads and their staff for all they do. Council Member Gutierrez stated that Chris Melville's presentation shows how hard he works to keep the City going. Council Member Gutierrez stated that he is sorry to see the Mayor leave. Council Member Gutierrez stated that he has served a long time and since the Mayor has been elected it was kind of a relief as they are able to work together. Council Member Gutierrez stated that there have been a lot of great things done for the community. Council Member Gutierrez stated that when Mayor Corona goes for a State level position he would have his support. Council Member Gutierrez wished Mayor Corona the best of luck.

Council Member Durham thanked the Department Heads for all their work. Council Member Durham thanked Chris Melville for his presentation as she always learns something new from his memos or presentations. Council Member Durham stated that it is very hard for her to have the Mayor leave as he was her manager when he was in school as a student then he was her friend and mentor. Council Member Durham stated that Mayor Corona encouraged her to run for office. Council Member Durham stated that she did not know what kind of Mayor he would be and she is inspired and awed by his work ethic and how seriously he takes this job. Council Member Durham stated that one thing she learned when she became a City Council Member was you are as busy and work as hard as you want to. Council Member Durham stated that being Mayor does not pay a lot but Mayor Corona put in the hours. Council Member Durham stated that Mayor Corona put West Wendover on the map not only at a State level but at the national level. Council Member Durham stated that Mayor Corona did a lot for the community and he is a rising star. Council Member Durham stated that Mayor Corona is going back to the private sector but she knows that no matter what he does you will be a great success. Council Member Durham hopes that whoever is considering understands the shoes they have to fill and the shadow they will be walking in. Council Member Durham stated that Mayor Corona took us all along with him for where he wanted to take us. Council Member Durham stated that as a resident of the community she is thankful and wishes his the best. Council Member Durham stated that she will miss their time together and thank you for everything.

Mayor Corona read the following into the record:

"For the last several weeks I have struggled to put into words what I want to say as I leave office, this certainly wasn't the way I planned to leave office when I was elected and re-elected. But one of the many things that my time as mayor has taught me is that things don't always happen as we plan, instead major events often happen on their own timeline and we must be flexible to this. As I've been preparing to enter this new chapter, I have taken the time to reflect and I am leaving proud of the work that we have done which wasn't always easy.

During my time in office, a major focus of mine was ensuring that West Wendover always had a seat at tables of power. Often, this meant showing up with my own chair and forcing my way in. I am often reminded of the adage, "If you are not at the table, then you are likely on the menu", which fueled my persistence. When I ran for mayor one of the driving forces was that I was tired of our community being overlooked and forgotten and I didn't feel that those we elected, aside from a few exceptions, ever really tried to change it. It is my sincere hope that anyone who comes after me learns from my time in office and understands how critical it is to be as active a mayor as they can possibly be. If I wouldn't have showed up at those tables of power the relationships that the city has with Senator Cortez Masto, Senator Rosen, Congressman Amodei, Treasurer Conine, and their offices would not have been possible. It was these relationships that led to many of our greatest accomplishments. Senator Cortez Masto and Senator Rosen worked closely with Congressman Amodei to help us secure the downtown property. Congressman Amodei has been a tireless advocate for the federal government turning over the land that was promised

to us 25 years ago, land that is vital to West Wendover's economic future. Treasurer Conine and his team helped facilitate the initial meetings with the DMV that led to us securing the kiosk at city hall.

Another relationship that has been vital to our success is the relationship between the city and the Nevada League of Cities. As you all know I had the honor of serving as the League's Vice President and President during what was arguably the hardest two years of the League. It had become ineffective and increasingly difficult to show value to members, but myself and the executive board knew the extreme potential of the league and the importance of cities working together. At the beginning of my Presidency, we hired Wesley to lead the League and he has completely turned it around. Today the League is an organization that is respected and taken seriously by our state and federal elected officials, it is vital that the City of West Wendover stay involved in the league as there is extreme value and we need to ensure that get all we can out of our membership! It is the relationship with the League that led to securing changes in state statute that allowed us to make the decision on whether to allow a dispensary in our community, without needing permission from the county. It was my involvement in the Nevada League of Cities and National League of Cities that led to me representing West Wendover when I testified in front of Congress and visited the White House as invited guest of the President. It is the league that has convened a working group or representatives from the league, city, Governor's office of Economic Development, and Nevada Health Centers to renew conversations about improving healthcare services in the community. Council Members Holm and Flores are part of that group and I strongly encourage whoever the next mayor is to join it!

I was asked recently what my proudest accomplishment as mayor was and I said working with the council to ensure that 10% of all marijuana tax revenues was set aside for our schools and community programs. Many of the needs of West Wendover's schools have long been overlooked by Elko County School District and this program will help ensure some of those needs are met.

I am incredibly proud of my time in office, I am also incredibly grateful. Grateful to this incredible, resilient community for raising me. Grateful to those who put their faith in me and allowed me to serve, giving me experiences that I could've never even dreamed of. Grateful to those who served with me, for challenging me when we disagreed and for forcing me to consider multiple sides of complex issues. Grateful to folks like Reno Mayor Hillary Schieve, Clark County Commissioner Tick Segerbloom, Former Lieutenant Governor Kate Marshall, and former Carson City Mayor Bob Crowell, who all have been incredible friends and even better mentors. Grateful to city staff, particularly the department heads. Any city is only as strong as the staff that keeps it running and as I have said and will continue to say, West Wendover has some of the best department heads and employees of any city in the state.

I am especially grateful to Chris Melville who has been the best person I could've possibly hoped to have guide and mentor me through this journey. We are incredibly lucky to have Chris leading our city and I will forever be grateful for the time I have

gotten to work with and learn from him. He is a fountain of knowledge who is well respected throughout the State and when his day comes to retire, he is going to leave an incredibly large pair of shoes for his successor to fill. No person has had a more positive impact on our community than Chris.

I am grateful to my close friends and family who have been my rock throughout my time in office. No one can humble you like those you love and my loved ones have made sure that I never took myself too seriously. When a commenter on Facebook called me, "the Marijuana Mayor", it was my family that made sure I had a birthday cake with a pot leaf and "Happy Birthday Marijuana Mayor" at my next birthday. When a story about me testing positive for COVID featured a photo of me that looked like a mugshot it was my friends who cut it out and hung it up in their homes and jobs. And when a Facebook commenter called me a "Commie expletive" it was my niece Reagen, who decided that I would for now on be known as, "Uncle Commie". It was my friends and family that reminded me throughout this that I am still human and that those who would hurl insults or create asinine rumors often don't know me and that I should be proud of the work I was doing.

Lastly, I am grateful to my Grandpa Roland who passed away a little more than six months after I took office. It was him who told me to, "quit your bitching and do something about it" when I was expressing my frustrations about West Wendover being left behind. That same evening, he gave me the money for my filing fee; it was $50 in $1 bills that he had saved from his tips as a casino shuttle driver. Not only did my grandpa encourage me to run he was the one person who believed I could win, even when I didn't believe it myself. My grandpa taught me the value of hard work and that through hard work nothing is impossible. I hope that he would be proud of my time in office and that he knows that none of it would've happened without his encouragement.

Next council meeting you all will appoint my successor, and while I respect your role in this process, I want to leave you with one piece of advice. Do your due diligence in making this decision and ask yourself do you want to go back to the way things were or do you want to continue moving forward. If you want to continue moving forward, select the candidate who is committed to giving this job the time and attention it deserves. Whoever comes after me is going to have to work hard to build vital relationships, just as I had to and that is a full-time commitment especially with a legislative session just around the corner.

I leave office hopeful for the future of West Wendover and grateful for the role that I was able to play in shaping that future. Thank you."

9. APPROVAL OF THE CLAIMS

a. Claims for August 2, 2022 (For Possible Action)

Council Member Holm made a motion to approve the claims for August 2, 2022. The motion was seconded by Council Member Gutierrez and passed unanimously.

RESULT:	**APPROVED [UNANIMOUS]**
MOVER:	Jasie Holm, Councilwoman
SECONDER:	Izzy Gutierrez, Councilman
AYES:	Durham, Flores, Gutierrez, Holm, Trujillo

10. COMMENTS FROM THE GENERAL PUBLIC

Mike Katsonis thanked Mayor Corona for all he has done for the City. Mike stated that there were no hard feelings for how much Mayor Corona had beaten him in the election. Mike thanked the Council for approving the liquor license for Lee's Liquor as he always gets asked about the liquor store when he attends parades in other areas. Mike stated that he hopes there is something that can be done in Pacifica Wendover Mobile Home Park (formerly Clearview) as it is a very struggling area. Mike stated that he is looking at being the replacement Mayor and hopes to have the Councils support unless they already have someone picked out which he suspects that you do have.

11. NEXT MEETING DATE AND ADJOURNMENT

a. Motion to: **Adjournment (For Possible Action)**

The next meeting date is a regular meeting on August 16, 2022 at 7:00 p.m. in the West Wendover City Hall, Council Chambers #137. Council Member Gutierrez made a motion to adjourn at 7:59 p.m. The motion was seconded by Council Member Durham and passed unanimously.

RESULT:	**ADOPTED [UNANIMOUS]**
MOVER:	Izzy Gutierrez, Councilman
SECONDER:	Kathy Durham, Councilwoman
AYES:	Durham, Flores, Gutierrez, Holm, Trujillo

ATTEST:

Anna E. Bartlome
City Clerk/Records Officer

ELKO DAILY FREE PRESS

3720 Idaho St. Elko, Nev. 89801 (775) 738-3118

Affidavit of Publication

I, Seana K. Chapman, Legal Clerk of the *Elko Daily Free Press*, published daily at Elko, Nevada, do solemnly swear that a copy of **NOTICE/STATE CDBG APPLICATION** as per clipping attached, was published on **August 23, 2022,** in the regular and entire issue of the above said newspaper, with general circulation of Elko and Lander counties, and not in any supplement thereof, for **ONE (1)** week commencing with the issue dated **August 23, 2022**, and ending with the issue dated as **August 23, 2022,** with no subsequent publications being made.

NOTICE OF PUBLIC HEARING FOR DISCUSSION OF POSSIBLE STATE CDBG APPLICATION

NOTICE IS HEREBY GIVEN that the City of West Wendover will conduct a public hearing on **September 6, 2022 at 7:05 p.m. at the West Wendover City Hall, Council Chambers #137** in order to discuss possible applications for funding under the State Community Development Block Grant (CDBG) Program and to solicit citizen input on possible activities to be included in the application. All persons may attend and be heard. Prior to the hearing, written comments may be filed with the West Wendover City Clerk and will be considered at the meeting.

Eligible Priority Activities Under the Above Allocation Consist of: Public Facility and Public Improvements Projects, Planning Studies, Economic Development Business Assistance and Microenterprise Activities.

The Community Development Block Grant Program, (CDBG) is a Federally Funded Program that is administered by the State of Nevada. The national objectives of this program are:

1. To benefit the low and moderate-income persons.
2. To aid in the prevention of and elimination of slums or blight.
3. To meet the Community Developments needs of having a particular urgency when other sources of funding are not available.

In addition, it is the State's goal to give extra consideration to projects addressing documented public health or safety needs or needs identified through a Community Planning Process.

The purpose of this public hearing is to give citizens an opportunity to discuss proposed projects submitted to date and to suggest further ideas. Proposed projects are listed below. Only projects listed here and proposed at the meeting will be forwarded to the City Council for possible selection and approval for application.

Fire Station Facility
To construct and equip a new fire station facility.

A final hearing will be held to discuss, approve and rank applications prior to submittal to the State.

If you are unable to attend the public hearing, written comments may be directed to the City of West Wendover, P.O. Box 2825, West Wendover, Nevada 89883, or you may telephone Anna Bartlome at 775-664-3081. In addition, information is available for review at the City offices (1111 N. Gene L. Jones Way) and is available for public inspection during normal business hours, from August 2, 2022 to November 1, 2022.

The City of West Wendover promotes fair housing and makes all its programs available to low and moderate income families regardless of age, race, color, relation, sex, national origin, sexual preference, marital status or handicap. The City of West Wendover does not discriminate on the handicapped status in the admission of access to, treatment, employment or activities in it's federally assisted programs.

Persons with disabilities who require special accommodations or assistance at the meeting should notify the City Clerks Office at 775-664-3081 or at 1111 N. Gene L. Jones Way, West Wendover, Nevada, 89883.

This notice is posted at the following locations:
West Wendover City Hall, West Wendover Library, Smith's Food & Drug, Nevada Post Office

Posted/Published: August 23, 2022

Seana K. Chapman

Subscribed and sworn to before me, on Aug 25, **2022.**

K Brennan

Notary Public

State of Nevada

County of Elko

KARALEE BRENNAN
Notary Public, State of Nevada
Appointment No. 17-4193-6
My Appt. Expires Oct 12, 2025

RECEIVED
AUG 29 2022
By

AFFIDAVIT OF PUBLICATION

State of Nevada

County of Elko

I, Lorena Sanchez, being first duly sworn, depose and say that I am the Editor of the Wendover Times, a weekly newspaper of general circulation published each Thursday at the City of West Wendover, Elko County, Nevada, that the notice attached hereto and which is part of the affidavit of publication of

Legal notice
Public Hearing - CDBG

Was published in said newspaper for 3 issue(s), the first publication having been made on the 18 day of August, 2023, and the last on the 1 day of September, 2023 that said notice was published in the regular and entire issue of every paper during the period and time of publication, and the same was published in a newspaper proper and not in a supplement.

Lorena Sanchez

Subscribed and sworn to me this 13th day of January, 2023.

MARIA D. HERNANDEZ
NOTARY PUBLIC
STATE OF NEVADA
My Commission Expires: 05-18-24
Certificate No: 12-6459-6

Notary Public

NOTICE OF PUBLIC HEARING FOR DISCUSSION OF POSSIBLE STATE CDBG APPLICATION

NOTICE IS HEREBY GIVEN that the City of West Wendover will conduct a public hearing on **September 6, 2022 at 7:05 p.m. at the West Wendover City Hall, Council Chambers #137** in order to discuss possible applications for funding under the State Community Development Block Grant (CDBG) Program and to solicit citizen input on possible activities to be included in the application. All persons may attend and be heard. Prior to the hearing, written comments may be filed with the West Wendover City Clerk and will be considered at the meeting.

Eligible Priority Activities Under the Above Allocation Consist of: Public Facility and Public Improvements Projects, Planning Studies, Economic Development Business Assistance and Microenterprise Activities.

The Community Development Block Grant Program, (CDBG) is a Federally Funded Program that is administered by the State of Nevada. The national objectives of this program are:

1. To benefit the low and moderate-income persons.
2. To aid in the prevention of and elimination of slums or blight.
3. To meet the Community Developments needs of having a particular urgency when other sources of funding are not available.

In addition, it is the State's goal to give extra consideration to projects addressing documented public health or safety needs or needs identified through a Community Planning Process.

The purpose of this public hearing is to give citizens an opportunity to discuss proposed projects submitted to date and to suggest further ideas. Proposed projects are listed below. Only projects listed here and proposed at the meeting will be forwarded to the City Council for possible selection and approval for application.

Fire Station Facility

To construct and equip a new fire station facility.

A final hearing will be held to discuss, approve and rank applications prior to submittal to the State.

If you are unable to attend the public hearing, written comments may be directed to the City of West Wendover, P.O. Box 2825, West Wendover, Nevada 89883, or you may telephone Anna Bartlome at 775-664-3081. In addition, information is available for review at the City offices (1111 N. Gene L. Jones Way) and is available for public inspection during normal business hours, from August 2, 2022 to November 1, 2022.

The City of West Wendover promotes fair housing and makes all its programs available to low and moderate income families regardless of age, race, color, relation, sex, national origin, sexual preference, marital status or handicap. The City of West Wendover does not discriminate on the handicapped status in the admission of access to, treatment, employment or activities in it's federally assisted programs.

Persons with disabilities who require special accommodations or assistance at the meeting should notify the City Clerks Office at 775-664-3081 or at 1111 N. Gene L. Jones Way, West Wendover, Nevada, 89883.

This notice is posted at the following locations:
West Wendover City Hall, West Wendover Library, Smith's Food & Drug, Nevada Post Office

Posted/Published: August 18, 2022

CITY OF WEST WENDOVER
P.O. Box 2825 • 1111 N. Gene L. Jones Way • West Wendover, NV 89883
Office (775) 664-3081 Fax (775) 664-3720

PUBLIC NOTICE PUBLIC NOTICE PUBLIC NOTICE

WEST WENDOVER CITY COUNCIL, REGULAR MEETING

DATE: September 06, 2022
TIME: 7:00 PM

LOCATION:Council Chambers #137, West Wendover City Hall

(THE MAYOR OR MAYOR PRO-TEM RESERVES THE RIGHT TO CHANGE THE ORDER OF THE AGENDA AND IF THE AGENDA IS NOT COMPLETE, TO RECESS THE MEETING AND CONTINUE ON ANOTHER SPECIFIED DATE AND TIME)

(IN THE EVENT THAT PUBLIC COMMENT IS ALLOWED DURING ANY AGENDA ITEM, THE MAYOR OR MAYOR PRO-TEM RESERVES THE RIGHT TO LIMIT SUCH COMMENT AND TERMINATE ANY FURTHER COMMENT)

(EACH SPEAKER, AFTER BEING ACKNOWLEDGED BY THE CHAIR, SHALL COME TO THE PODIUM AND IF REQUIRED FILL OUT A REQUEST TO SPEAK FORM, THEN WILL SPEAK DIRECTLY INTO THE MICROPHONE, AND STATE THEIR NAME, RESIDENCY AND ANY ORGANIZATION THEY ARE REPRESENTING FOR THE RECORD.)

(THESE PROCEEDINGS ARE BEING VIDEO RECORDED. THE COUNCIL MEETINGS CAN BE VIEWED ON THE INTERNET AT www.westwendovercity.com WITHIN 24 HOURS OF THE END OF THE MEETING.)

AGENDA

1. **CALL TO ORDER AND ROLL CALL**

   a. **Roll Call**

2. **PLEDGE OF ALLEGIANCE**

3. **COMMENTS FROM THE GENERAL PUBLIC**

   Requires a sign in sheet and request of the Council to speak, limitation of three minutes.

4. **APPOINTMENT TO FILL THE VACANCY OF CITY COUNCIL MEMBER**

   a. **Discussion and Decision Concerning the Filling of a Vacancy on the City Council per NRS 266.225, by Selection of a Person with the Requisite Qualifications by a Majority Vote of the City Council and Mayor, Who has the Same Voting Power Thereon as a Council Member. The Person so Selected Shall Hold the Office Until the Election and Qualification of His or Her Successor at the Next General City Election November 2022 (For Possible Action)**

5. **APPROVAL OF THE MINUTES (For Possible Action)**

a. **City Council - Regular Meeting - Aug 16, 2022 7:00 PM**

6. PUBLIC HEARING

NOTICE IS HEREBY GIVEN that the City of West Wendover will conduct a public hearing on September 6, 2022 at 7:05 p.m. at the West Wendover City Hall, Council Chambers #137 in order to discuss possible applications for funding under the State Community Development Block Grant (CDBG) Program and to solicit citizen input on possible activities to be included in the application. All persons may attend and be heard. Prior to the hearing, written comments may be filed with the West Wendover City Clerk and will be considered at the meeting.

Eligible Priority Activities Under the Above Allocation Consist of: Public Facility and Public Improvements Projects, Planning Studies, Economic Development Business Assistance and Microenterprise Activities.

The Community Development Block Grant Program, (CDBG) is a Federally Funded Program that is administered by the State of Nevada. The national objectives of this program are:

1. To benefit the low and moderate-income persons.
2. To aid in the prevention of and elimination of slums or blight.
3. To meet the Community Developments needs of having a particular urgency when other sources of funding are not available.

In addition, it is the State's goal to give extra consideration to projects addressing documented public health or safety needs or needs identified through a Community Planning Process.

The purpose of this public hearing is to give citizens an opportunity to discuss proposed projects submitted to date and to suggest further ideas. Proposed projects are listed below. Only projects listed here and proposed at the meeting will be forwarded to the City Council for possible selection and approval for application.

Fire Station & EOC Facility

To construct and equip a new fire station facility.

A final hearing will be held to discuss, approve and rank applications prior to submittal to the State.

If you are unable to attend the public hearing, written comments may be directed to the City of West Wendover, P.O. Box 2825, West Wendover, Nevada 89883, or you may telephone Anna Bartlome at 775-664-3081. In addition, information is available for review at the City offices (1111 N. Gene L. Jones Way) and is available for public inspection during normal business hours, from August 2, 2022 to November 1, 2022.

The City of West Wendover promotes fair housing and makes all its programs available to low and moderate income families regardless of age, race, color, relation, sex, national origin, sexual preference, marital status or handicap. The City of West Wendover does not discriminate on the handicapped status in the admission of access to, treatment, employment or activities in it's federally assisted programs.

Persons with disabilities who require special accommodations or assistance at the meeting should notify the City Clerks Office at 775-664-3081 or at 1111 N. Gene L. Jones Way, West Wendover, Nevada, 89883.

Hearing to Receive Input with Regards to CDBG Program

7. NEW BUSINESS

a. **Discussion and Decision to Approve and Authorize the Mayor to Execute the Statement of Concern Letter to the State Engineer, Nevada Division of Water Resources Regarding Water Rights Applications 86278 through 86281, 90803 and 91551 (For Possible Action)**

Report By City Manager

Review/Comment/Action: City Council

8. **DEPARTMENT REPORTS**

   1. **Fire Chief**
   2. **Police Chief**
   3. **City Clerk/Records Officer**
   4. **Chief Financial Officer**
   5. **Public Works Director**
   6. **City Manager**

9. **COMMUNICATIONS**

   Reports by Elected Officials

10. **APPROVAL OF THE CLAIMS**

    a. **Claims for September 6, 2022 (For Possible Action)**

11. **COMMENTS FROM THE GENERAL PUBLIC**

    Requires a sign in sheet and request of the Council to speak, limitation of three minutes.

12. **NEXT MEETING DATE AND ADJOURNMENT**

    a. **Adjournment (For Possible Action)**

This notice is posted at the following locations:
West Wendover City Hall, West Wendover Library,
Smith's Food & Drug, Nevada Post Office

Members of the public who are disabled and require special accommodations or assistance at the meeting are requested to notify the City Clerk in writing at the City of West Wendover, 1111 N. Gene L. Jones Way, P.O. Box 2825, West Wendover, Nevada, or by calling (775) 664-3081.

CITY OF WEST WENDOVER
P.O. Box 2825 • 1111 N. Gene L. Jones Way • West Wendover, NV 89883
Office (775) 664-3081 Fax (775) 664-3720

PUBLIC MEETING NOTICE

The West Wendover City Council will meet in a regular session on September 6, 2022, at the West Wendover City Hall, Council Chambers Room #137 at 7:00 p.m. Attached with this notice is the agenda for said meeting of the Council. This notice is posted pursuant to N.R.S. 241 020 as amended by the 1997 Legislature. This notice is posted at the following places no later than August 31, 2022.

WEST WENDOVER CITY HALL
WEST WENDOVER BRANCH LIBRARY
SMITH'S FOOD & DRUG STORE
WEST WENDOVER POST OFFICE

NOTICE TO PERSONS WITH DISABILITIES

Members of the public who are disabled and require special accommodations or assistance at the meeting are requested to notify the City Clerk in writing at the City of West Wendover, 1111 N. Gene L. Jones Way, P.O. Box 2825, West Wendover, Nevada, or by calling (775) 664-3081.

"The City of West Wendover is an equal opportunity provider."

CITY OF WEST WENDOVER
P.O. Box 2825 • 1111 N. Gene L. Jones Way • West Wendover, NV 89883
Office (775) 664-3081 Fax (775) 664-3720

WEST WENDOVER CITY COUNCIL, MINUTES OF THE REGULAR MEETING OF SEPTEMBER 06, 2022

1. CALL TO ORDER AND ROLL CALL

Attendee Name	Title	Status	Arrived
Kathy Durham	Councilwoman	Present	
Nick Flores	Councilman	Present	
Izzy Gutierrez	Councilman	Present	
John B. Hanson	Councilman	Present	
Robert Trujillo	Councilman	Present	
Jasie Holm	Mayor	Present	
Chris Melville	City Manager	Present	
Jeff Knudtson	Fire Chief	Present	
Debbie Sanchez	Chief Financial Officer	Present	
Cal Kunz	Chief of Police	Present	
Raul Naranjo	Public Works Director	Present	
Anna Bartlome	City Clerk/Records Officer	Absent	
Maria Hernandez	Accounting Technician	Present	

Others Present: Erica Gallegos and Dennis Braves

Mayor Holm called the meeting to order at 7:00 p.m. in the West Wendover City Hall, Council Chambers #137. All those present and excused are noted above.

2. PLEDGE OF ALLEGIANCE

Mayor Holm led those present in the Pledge of Allegiance.

3. COMMENTS FROM THE GENERAL PUBLIC

Jeff Durham, representative for District 6 of the Elko County School District, to remind everyone of the Community Input Master Facility Planning meeting on September 19, 2022 at 5:30 p.m. at the West Wendover Elementary School. The meeting is to receive input on the future of the schools and facilities in the district. Jeff stated personally he wanted to put in a good word for Carolyn Santillanez on the potential appointment of the vacant City Council seat.

4. APPOINTMENT TO FILL THE VACANCY OF CITY COUNCIL MEMBER

a. Discussion and Decision Concerning the Filling of a Vacancy on the City Council per NRS 266.225, by Selection of a Person with the Requisite Qualifications by a Majority Vote of the City Council and Mayor, Who has the Same Voting Power Thereon as a Council Member. The Person so Selected Shall Hold the Office Until the Election and Qualification of His or Her Successor at the Next General City Election November 2022 (For Possible Action)

Mayor Holm explained that three people have submitted their names for the vacant Council Member seat (John Hanson, Carolyn Santillanez and Gabriela Soriano). Mayor Holm stated that we will pull their names randomly and each can come up and speak as to why they should be selected.

Council Member Durham asked if they were just giving statements or can questions be asked. Chris Melville stated that each person will give their statements first and if the Mayor and Council Members have questions then they can ask them.

Council Member Gutierrez disclosed that he works with Gabriela Soriano at Nevada Health Centers and neither holds a management position over the other. Council Member Trujillo disclosed that he works with John Hanson at Peppermill Properties but this decision will not financially benefit him. Council Member Flores disclosed that he works with John Hanson at Peppermill Properties but neither holds a supervisory position over the other. Mayor Holm disclosed that she works with Carolyn Santillanez at the JAS Foundation/Senior Center and is currently the acting President of the JAS Foundation and will recuse herself from voting if Carolyn Santillanez is selected as the Council Member.

The first name selected was John Hanson.

John Hanson stated that he is a long term resident and has served on the Council previously. John stated that when he previously served he never missed a regularly scheduled meeting. John stated that he felt it was an honor to serve before and still feels that way.

Council Member Durham stated that she is so uncomfortable with the process of selecting a person to fill the vacancy of a Council Member. Council Member Durham stated that when voting at an election your vote is private but when selecting to fill a vacancy it is done in public. Council Member Durham stated that she likes everyone and does not want this vote to be taken personally. Council Member Durham asked what John's vision of the community is, where he stands with the Nevada League of Cities and what involvement he would be interested in committing to.

John stated that he has been a resident of the community before the City was incorporated and has been involved in many committees. John was one of the first residents to build a home in West Wendover and has invested in a small business. John stated that he has attended some of the Nevada League of Cities meetings. John stated that he does not know if we need to attend all of the league meetings but should attend the ones that will help benefit our community. John stated that now that we have land and room to grow he would welcome other businesses in the community.

Council Member Flores stated that all three of the people that put their name in to be

considered for this position shows that they are invested in the community and that you want to be a part of the change. Council Member Flores stated that it is very difficult to come up and speak but he really applauds all of them for doing this. Council Member Flores stated that it is uncomfortable and he wishes we could just pick names out of a hat. Council Member Flores stated that this decision is not personal but a decision has to be made.

John stated that when the Council votes to consider that he is active and solid in the community. John stated that he hopes you look at his qualifications and not where he works.

The second name selected was Gabriela "Gabi" Soriano.

Gabi Soriano stated that she works with Council Member Gutierrez and Council Member Durham had been her teacher. Gabi stated that she is running in the November election. Gabi stated that she had a small business in the community but recently had to close it down due to a change in the laws and regulations. Gabi stated that if she is elected she is looking forward to working with the Council to bring more family growth to the community as she would like to see more things for the kids to do. Gabi stated that she thinks that she gets along with pretty much everyone.

Council Member Durham had the same questions as before in what is Gabi's vision of the community and how committed is she to the Nevada League of Cities.

Gabi stated that she is not opposed to any businesses coming to the community as it would be a good opportunity. Gabi stated that she does not know anything about the Nevada League of Cities but is willing to work with them to bring growth to the community.

Mayor Holm asked what Gabi's business was. Gabi stated that her business was a body contouring business which recently became regulated under medical.

Council Member Trujillo thanked her again for putting her name in. Council Member Trujillo stated that after the election it would be an honor to work with any of the candidates. Mayor Holm stated that the election is in November and the current board is pretty easy to work with and she thinks whoever wins the election it will still be able to do great things. Council Member Gutierrez stated that whoever is selected tonight will only work with him a short time.

The third name selected was Carolyn Santillanez.

Carolyn Santillanez stated that she grew up in the community and moved away when she had gotten married but has been back in the community about fifteen years. Carolyn stated that all of her grandkids go to school here. Carolyn stated that she works at the JAS Foundation and has just recently taken over the Salvation Army. Carolyn stated that she and Mayor Holm are working on getting more entities for the seniors. Carolyn stated that she really wants to see the City grow and she is not opposed to any businesses coming in. Carolyn as the more businesses that come in it will help all the small businesses. Carolyn stated that she does know a little about the Nevada League of Cities from former Mayor Corona and she would be willing to do whatever is needed.

Council Member Durham thanked everyone who came tonight and the fact that you put your name in is greatly appreciated. Council Member Durham stated that serving on City Council has been the most humbling and honoring experiences. Council Member Durham stated that she thinks everyone should run and serve office at least once. Council Member Durham stated that whoever is selected tonight may not be who is elected in November. Council Member Durham stated that this is a hard decision as she knows each one of them.

Council Member Gutierrez made a motion to concerning the filling of the vacancy of the City Council Member per NRS 266.225, by selection of Gabriela Soriano, a person with the requisite qualifications to hold office until the election and qualification of her successor at the next general city election in November 2022. The motion was seconded by Mayor Holm; Council Members Durham, Flores and Trujillo voted nay. A roll call vote was done on this item.

Council Member Trujillo made a motion to concerning the filling of the vacancy of the City Council Member per NRS 266.225, by selection of John Hanson, a person with the requisite qualifications to hold office until the election and qualification of his successor at the next general city election in November 2022. The motion was seconded by Council Member Flores and passed; Council Member Gutierrez and Mayor Holm voted nay. A roll call vote was done on this item.

After the vote John Hanson was sworn in by Judge Leamon as City Council Member.

5. APPROVAL OF THE MINUTES (For Possible Action)

a. City Council - Regular Meeting - Aug 16, 2022 7:00 PM

Council Member Flores made a motion to approve the minutes of the regular meeting of August 16, 2022. The motion was seconded by Council Member Trujillo and passed unanimously.

RESULT:	**ACCEPTED [UNANIMOUS]**
MOVER:	Nick Flores, Councilman
SECONDER:	Robert Trujillo, Councilman
AYES:	Durham, Flores, Gutierrez, Hanson, Trujillo

6. PUBLIC HEARING

NOTICE IS HEREBY GIVEN that the City of West Wendover will conduct a public hearing on September 6, 2022 at 7:05 p.m. at the West Wendover City Hall, Council Chambers #137 in order to discuss possible applications for funding under the State Community Development Block Grant (CDBG) Program and to solicit citizen input on possible activities to be included in the application. All persons may attend and be heard. Prior to the hearing, written comments may be filed with the West Wendover City Clerk and will be considered at the meeting.

Eligible Priority Activities Under the Above Allocation Consist of: Public Facility and Public Improvements Projects, Planning Studies, Economic Development Business Assistance and Microenterprise Activities.

The Community Development Block Grant Program, (CDBG) is a Federally Funded Program that is administered by the State of Nevada. The national objectives of this program are:

1. To benefit the low and moderate-income persons.
2. To aid in the prevention of and elimination of slums or blight.
3. To meet the Community Developments needs of having a particular urgency when other sources of funding are not available.

In addition, it is the State's goal to give extra consideration to projects addressing documented public health or safety needs or needs identified through a Community Planning Process.

The purpose of this public hearing is to give citizens an opportunity to discuss proposed projects submitted to date and to suggest further ideas. Proposed projects are listed below. Only projects listed here and proposed at the meeting will be forwarded to the City Council for possible selection and approval for application.

Fire Station & EOC Facility

To construct and equip a new fire station facility.

A final hearing will be held to discuss, approve and rank applications prior to submittal to the State.

If you are unable to attend the public hearing, written comments may be directed to the City of West Wendover, P.O. Box 2825, West Wendover, Nevada 89883, or you may telephone Anna Bartlome at 775-664-3081. In addition, information is available for review at the City offices (1111 N. Gene L. Jones Way) and is available for public inspection during normal business hours, from August 2, 2022 to November 1, 2022.

The City of West Wendover promotes fair housing and makes all its programs available to low and moderate income families regardless of age, race, color, relation, sex, national origin, sexual preference, marital status or handicap. The City of West Wendover does not discriminate on the handicapped status in the admission of access to, treatment, employment or activities in it's federally assisted programs.

Persons with disabilities who require special accommodations or assistance at the meeting should notify the City Clerks Office at 775-664-3081 or at 1111 N. Gene L. Jones Way, West Wendover, Nevada, 89883.

Mayor Holm closed the regular portion of the meeting and opened the public hearing portion

of the meeting.

Chris Melville explained that he has provided the current project through the planning process based on the first public hearing and this being the second public hearing. The current project is the Fire Station/EOC Project. This is the only project that has been brought forward in the process. Below is the review of the Project Layout, Project Cost and Funding Analysis.

Project Layout

The layout is not the fire station that had been planned for in 2018 but will still give the Fire Department a better facility with more capability. There will be the ability to have 5 full size bays that will meet one of the main objectives of the Department in providing space for existing and future equipment needs.

Here are the basics of the design:

- Equipment Bay (4). 85 square feet in length, 18 feet wide with 14 foot door openings. The bays have a 6 foot access lane which runs through the center of the building. Between bay 1 and 2 are (32) turn out racks for fire fighter turnouts and gear; split decontamination rooms (west side) which provide for initial wash-down of firefighter turnouts; and hand equipment before being brought into the station and finally an open storage area (east side).
- Storage Bay (1). 85 square feet in length. This storage bay will allow indoor storage and easy access of materials and stored equipment and supplies. In the future as needed an additional storage building could be constructed on site which would then allow this bay to be converted to a fully operational equipment bay.
- Office Area. Approximately 2,100 square feet. Within the office area you would find the following starting at the main public entrance on the east side and moving west:
    - Reception area. This reception area also doubles as a workspace for up to two firefighters
    - Public restrooms
    - (2) Captain's offices
    - IT and Comms room
    - Chief's office
    - Access vestibule to equipment bays
    - Storage room
    - Dayroom/training room
    - Kitchen and dining area

- Crew restroom and shower (access via bay side)
- Laundry and cleaning room (access via bay side)

As mentioned, the office area portion of the building would be designed wherein when able the City could expand on the north side by adding sleeping quarters, additional restrooms/showers, training rooms, offices and storage rooms.

Project Cost and Funding Analysis

The project cost and funding analysis for the current layout and design/build estimate is as follows:

Project Cost

Item	**Amount**	**Status**
Land Purchase	$840,000.00	Complete
Pre-Development Costs	$35,000.00	Complete
Architectural Fees (Phase 1A)	$292,500.00	In process
Bond Counsel and Fees	$75,000.00	In process
Interim Interest	$100,000.00	In process
Architectural & Construction	$9,206,283.00	TBD
Construction Management & General Conditions	$1,642,465.00	TBD
	$12,191,248.00	**Total**

Project Funding

Item	**Amount**	**Status**
USDA-RD Loan	$8,906,800.00	Complete
CDBG 2023 Grant	$950,000.00	TBD

USDA RD Grant $500,000.00	In Process
City Contribution (cash) $2,041,399.00*	TBD
$12,398,199.00	**Total**

*City's second tranche of ARP (SLFRF) Funding is $2,870,346.00. Of that amount the Council has currently committed $828,947.00 towards the Downtown Project. That leaves a balance of $2,041,399.00 as shown for this project. If both the CDBG grant and the USDA grant were both awarded and, in the amounts as shown, we would have the costs covered with just over $200,000.00 in buffer. However, that buffer will likely be reduced given some final tweaks that are being done to the design which have been provided to the Mayor and Council. Those tweaks will be complete in a few weeks and when the project is presented in November for approval the numbers will be more accurate.

Also, depending on the completed Downtown Project the amount which Council committed to the project may come in less thus providing a few hundred thousand which could be used towards the Fire Station project. We will not know what the final to the Downtown Project is until spring of 2023.

Chris stated that as a final note he has two other funding possibilities which could assist in covering costs of the current design or possibly allow the City to expand the current design if funding comes through. They are as follows:

- Application filed for FY23 Congressional Direct Funding Grant, Congressman Amodei - $2,672,040.00
- Application for Gap Financing/Other - Nevada Infrastructure Bank, Treasurer Conine - $TBD

There being no public comment Mayor Holm closed the public hearing and opened the regular portion of the meeting.

Hearing to Receive Input with Regards to CDBG Program

7. NEW BUSINESS

a. Discussion and Decision to Approve and Authorize the Mayor to Execute the Statement of Concern Letter to the State Engineer, Nevada Division of Water Resources Regarding Water Rights Applications 86278 through 86281, 90803 and 91551 (For Possible Action)

Report By City Manager

Review/Comment/Action: City Council

Chris Melville explained that the first letter goes back to Council action in April when previously approved and was then provided to the State Engineer. Chris stated that the

State Engineer had some caveats that they wanted covered which would make them comfortable in making a decision. Chris stated that the new letter has been drafted and reviewed by Nevada Gold Mines, City Engineers, Wendover Utah, himself and legal counsel. If the letter is approved it will be taken to Wendover Utah for their approval and signature.

Council Member Durham asked if the protest or concern by US Fish & Wildlife was due to their belief that the mining and how the water is used was a threat to the particular fish species. Chris stated that is correct that US Fish & Wildlife have never agreed with all the hydrology studies that have been done over the past ten years. General discussion was had regarding the water right application process, protest process and use of the water rights.

Council Member Trujillo made a motion to approve and authorize the Mayor to execute the Statement of Concern Letter to the State Engineer, Nevada Division of Water Resources regarding Water Rights Applications 86278 through 86281, 90803 and 91551. The motion was seconded by Council Member Gutierrez and passed unanimously.

RESULT:	**APPROVED [UNANIMOUS]**
MOVER:	Robert Trujillo, Councilman
SECONDER:	Izzy Gutierrez, Councilman
AYES:	Durham, Flores, Gutierrez, Hanson, Trujillo

8. DEPARTMENT REPORTS

1. Fire Chief

Jeff Knudtson had nothing to add to his report.

2. Police Chief

Cal Kunz had nothing to add to his report.

3. City Clerk/Records Officer

Maria Hernandez had nothing to add to the report.

4. Chief Financial Officer

Debbie Sanchez had nothing to add to her report.

5. Public Works Director

Raul Narnjo had nothing to add to his report.

6. City Manager

Chris Melville had nothing to add to his report.

9. COMMUNICATIONS

Reports by Elected Officials

Council Member Durham thanked everyone who came to the meeting tonight and submitted their names for the vacant Council seat. Council Member Durham stated that she was not comfortable with how the process is to appoint vacant Council Members and it is temporary

as there is an election coming up. Council Member Durham stated that people need to show up and vote on who they would like to be on the Council.

Council Member Gutierrez congratulated John Hanson on his selection to the Council as he has served with him before and feels they can continue to work together. Council Member Gutierrez thanked everyone who submitted their name to fill the vacant Council seat. Council Member Gutierrez thanked the Department Heads and their staff for all their work.

Council Member Flores thanked the Department Heads for all they do. Council Member Flores congratulated John Hanson for his selection to the Council. Council Member Flores thanked Carolyn Santillanez and Gabriela Soriano for submitting their names for the vacant Council seat. Council Member Flores stated that he does not like the process for how a vacant Council seat is filled but it is how the process works.

Council Member Trujillo thanked the Department Heads for all they do. Council Member Trujillo congratulated John Hanson for his selection to the Council. Council Member Trujillo stated that after the election whoever gets selected it will be an honor to work with them. Council Member Trujillo thanked all those who showed interest in the vacant Council seat.

Council Member Hanson stated that it is quite an honor to be selected to fill the vacant Council seat.

Mayor Holm stated that she respects the Councils vote and the community's vote. Mayor Holm stated that she is ready to continue moving forward and working together as a team. Mayor Holm thanked those who submitted their names for the vacant Council seat. Mayor Holm stated that she had been in a meeting earlier that discussed senior services which included free law services for seniors.

10. APPROVAL OF THE CLAIMS

a. Claims for September 6, 2022 (For Possible Action)

Council Member Flores made a motion to approve the claims for September 6, 2022. The motion was seconded by Council Member Gutierrez and passed unanimously.

RESULT:	**APPROVED [UNANIMOUS]**
MOVER:	Nick Flores, Councilman
SECONDER:	Izzy Gutierrez, Councilman
AYES:	Durham, Flores, Gutierrez, Hanson, Trujillo

11. COMMENTS FROM THE GENERAL PUBLIC

None offered or received.

12. NEXT MEETING DATE AND ADJOURNMENT

a. Motion to: **Adjournment (For Possible Action)**

The next meeting date is a regular meeting on September 20, 2022 at 7:00 p.m. in the West Wendover City Hall, Council Chambers #137. Council Member Gutierrez made a motion to adjourn at 7:54 p.m. The motion was seconded by Council Member Trujillo and passed unanimously.

RESULT:	**ADOPTED [UNANIMOUS]**
MOVER:	Izzy Gutierrez, Councilman
SECONDER:	Robert Trujillo, Councilman
AYES:	Durham, Flores, Gutierrez, Hanson, Trujillo

ATTEST:

Anna E. Bartlome
City Clerk/Records Officer

ELKO DAILY FREE PRESS

3720 Idaho St. Elko, Nev. 89801 (775) 738-3118

Affidavit of Publication

I, Seana K. Chapman, Legal Clerk of the *Elko Daily Free Press*, published daily at Elko, Nevada, do solemnly swear that a copy of **NOTICE/CDBG**, as per clipping attached, was published on **October 18, 2022,** in the regular and entire issue of the above said newspaper, with general circulation of Elko and Lander counties, and not in any supplement thereof, for **ONE (1)** week commencing with the issue dated **October 18, 2022**, and ending with the issue dated as **October 18, 2022,** with no subsequent publications being made.

Seana K. Chapman

Subscribed and sworn to before me, on Oct 18, **2022.**

Notary Public

State of Nevada

County of Elko

NICHOLE MOURITSEN
Notary Public, State of Nevada
Appointment No. 18-1035-6
My Appt. Expires Jan 13, 2026

NOTICE OF PUBLIC HEARING FOR DISCUSSION OF POSSIBLE STATE CDBG APPLICATION

NOTICE IS HEREBY GIVEN that the City of West Wendover will conduct a public hearing on **November 1, 2022 at 7:05 p.m. at the West Wendover City Hall, Council Chambers #137**. In order to discuss possible applications for funding under the next fiscal year's State Community Development Block Grant (CDBG) Program and to solicit citizen input on possible activities to be included in the application. All persons may attend and be heard. Prior to the hearing, written comments may be filed with the West Wendover City Clerk and will be considered at the meeting.

The purpose of this public hearing is to discuss comments received on potential applications, and approve and rank applications prior to submittal to the State.

If you are unable to attend the public hearing, written comments may be directed to the City of West Wendover, P.O. Box 2825, West Wendover, Nevada 89883, or you may telephone Anna Bartlome at 775-664-3081. In addition, information is available for review at the City offices (1111 N. Gene L. Jones Way) and is available for public inspection during normal business hours, from August 2, 2022 to November 1, 2022.

The City of West Wendover promotes fair housing and makes all its programs available to low and moderate income families regardless of age, race, color, relation, sex, national origin, sexual preference, marital status or handicap. The City of West Wendover does not discriminate on the handicapped status in the admission of access to, treatment, employment or activities in it's federally assisted programs.

Persons with disabilities who require special accommodations or assistance at the meeting should notify the City Clerks Office at 775-664-3081 or at 1111 N. Gene L. Jones Way, West Wendover, Nevada, 89883.

This notice is posted at the following locations:
West Wendover City Hall, West Wendover Library, Smith's Food & Drug, Nevada Post Office

Posted/Published: October 18, 2022

AFFIDAVIT OF PUBLICATION

State of Nevada

County of Elko

I, Lorena Sanchez, being first duly sworn, depose and say that I am the Editor of the Wendover Times, a weekly newspaper of general circulation published each Thursday at the City of West Wendover, Elko County, Nevada, that the notice attached hereto and which is part of the affidavit of publication of

Legal notice
Public Hearing - CDBG

Was published in said newspaper for 3 issue(s), the first publication having been made on the 18 day of August, 2023, and the last on the 1 day of September, 2023 that said notice was published in the regular and entire issue of every paper during the period and time of publication, and the same was published in a newspaper proper and not in a supplement.

Lorena Sanchez

Subscribed and sworn to me this 13th day of January, 2023.

MARIA D. HERNANDEZ
NOTARY PUBLIC
STATE OF NEVADA
My Commission Expires: 05-18-24
Certificate No: 12-6459-6

Notary Public

NOTICE OF PUBLIC HEARING FOR DISCUSSION OF POSSIBLE STATE CDBG APPLICATION

NOTICE IS HEREBY GIVEN that the City of West Wendover will conduct a public hearing on **September 6, 2022 at 7:05 p.m. at the West Wendover City Hall, Council Chambers #137** in order to discuss possible applications for funding under the State Community Development Block Grant (CDBG) Program and to solicit citizen input on possible activities to be included in the application. All persons may attend and be heard. Prior to the hearing, written comments may be filed with the West Wendover City Clerk and will be considered at the meeting.

Eligible Priority Activities Under the Above Allocation Consist of: Public Facility and Public Improvements Projects, Planning Studies, Economic Development Business Assistance and Microenterprise Activities.

The Community Development Block Grant Program, (CDBG) is a Federally Funded Program that is administered by the State of Nevada. The national objectives of this program are:

1. To benefit the low and moderate-income persons.
2. To aid in the prevention of and elimination of slums or blight.
3. To meet the Community Developments needs of having a particular urgency when other sources of funding are not available.

In addition, it is the State's goal to give extra consideration to projects addressing documented public health or safety needs or needs identified through a Community Planning Process.

The purpose of this public hearing is to give citizens an opportunity to discuss proposed projects submitted to date and to suggest further ideas. Proposed projects are listed below. Only projects listed here and proposed at the meeting will be forwarded to the City Council for possible selection and approval for application.

Fire Station Facility

To construct and equip a new fire station facility.

A final hearing will be held to discuss, approve and rank applications prior to submittal to the State.

If you are unable to attend the public hearing, written comments may be directed to the City of West Wendover, P.O. Box 2825, West Wendover, Nevada 89883, or you may telephone Anna Bartlome at 775-664-3081. In addition, information is available for review at the City offices (1111 N. Gene L. Jones Way) and is available for public inspection during normal business hours, from August 2, 2022 to November 1, 2022.

The City of West Wendover promotes fair housing and makes all its programs available to low and moderate income families regardless of age, race, color, relation, sex, national origin, sexual preference, marital status or handicap. The City of West Wendover does not discriminate on the handicapped status in the admission of access to, treatment, employment or activities in it's federally assisted programs.

Persons with disabilities who require special accommodations or assistance at the meeting should notify the City Clerks Office at 775-664-3081 or at 1111 N. Gene L. Jones Way, West Wendover, Nevada, 89883.

This notice is posted at the following locations:
West Wendover City Hall, West Wendover Library, Smith's Food & Drug, Nevada Post Office

Posted/Published: August 18, 2022

CITY OF WEST WENDOVER
P.O. Box 2825 • 1111 N. Gene L. Jones Way • West Wendover, NV 89883
Office (775) 664-3081 Fax (775) 664-3720

PUBLIC NOTICE PUBLIC NOTICE PUBLIC NOTICE

WEST WENDOVER CITY COUNCIL, REGULAR MEETING

DATE: November 01, 2022
TIME: 7:00 PM

LOCATION:Council Chambers #137, West Wendover City Hall

(THE MAYOR OR MAYOR PRO-TEM RESERVES THE RIGHT TO CHANGE THE ORDER OF THE AGENDA AND IF THE AGENDA IS NOT COMPLETE, TO RECESS THE MEETING AND CONTINUE ON ANOTHER SPECIFIED DATE AND TIME)

(IN THE EVENT THAT PUBLIC COMMENT IS ALLOWED DURING ANY AGENDA ITEM, THE MAYOR OR MAYOR PRO-TEM RESERVES THE RIGHT TO LIMIT SUCH COMMENT AND TERMINATE ANY FURTHER COMMENT)

(EACH SPEAKER, AFTER BEING ACKNOWLEDGED BY THE CHAIR, SHALL COME TO THE PODIUM AND IF REQUIRED FILL OUT A REQUEST TO SPEAK FORM, THEN WILL SPEAK DIRECTLY INTO THE MICROPHONE, AND STATE THEIR NAME, RESIDENCY AND ANY ORGANIZATION THEY ARE REPRESENTING FOR THE RECORD.)

(THESE PROCEEDINGS ARE BEING VIDEO RECORDED. THE COUNCIL MEETINGS CAN BE VIEWED ON THE INTERNET AT www.westwendovercity.com WITHIN 24 HOURS OF THE END OF THE MEETING.)

AGENDA

1. **CALL TO ORDER AND ROLL CALL**

   a. **Roll Call**

2. **PLEDGE OF ALLEGIANCE**

3. **COMMENTS FROM THE GENERAL PUBLIC**

   Requires a sign in sheet and request of the Council to speak, limitation of three minutes.

4. **APPROVAL OF THE MINUTES (For Possible Action)**

   a. **City Council - Special Meeting - Oct 18, 2022 6:30 PM**

   b. **City Council - Regular Meeting - Oct 18, 2022 7:00 PM**

5. **PUBLIC HEARING**

   NOTICE IS HEREBY GIVEN that the City of West Wendover will conduct a public hearing on November 1, 2022 at 7:05 p.m. at the West Wendover City Hall, Council Chambers #137 in order to discuss possible applications for funding under the next fiscal year's State

Community Development Block Grant (CDBG) Program and to solicit citizen input on possible activities to be included in the application. All persons may attend and be heard. Prior to the hearing, written comments may be filed with the West Wendover City Clerk and will be considered at the meeting.

The purpose of this public hearing is to discuss comments received on potential applications, and approve and rank applications prior to submittal to the State.

If you are unable to attend the public hearing, written comments may be directed to the City of West Wendover, P.O. Box 2825, West Wendover, Nevada 89883, or you may telephone Anna Bartlome at 775-664-3081. In addition, information is available for review at the City offices (1111 N. Gene L. Jones Way) and is available for public inspection during normal business hours, from August 2, 2022 to November 1, 2022.

The City of West Wendover promotes fair housing and makes all its programs available to low and moderate income families regardless of age, race, color, relation, sex, national origin, sexual preference, marital status or handicap. The City of West Wendover does not discriminate on the handicapped status in the admission of access to, treatment, employment or activities in it's federally assisted programs.

Persons with disabilities who require special accommodations or assistance at the meeting should notify the City Clerks Office at 775-664-3081 or at 1111 N. Gene L. Jones Way, West Wendover, Nevada, 89883.

1. **Discussion and Decision for Selection and Approval of a Project for the Community Development Block Grant Program 2023, and Authorization for Staff to Prepare and Mayor to Execute Any Such Applications, Documents or Agreements as Necessary for the Selected Project and Other Matters Appropriately Related Thereto (For Possible Action)**

6. PRESENTATION

a. **Presentation by Wendover Prevention Group/PACE Coalation Regarding a Proposal on the Use of the City's Annual Opioid Settlement Funds**

7. NEW BUSINESS

a. **Discussion and Decision to Approve a Funding Agreement with the PACE Coalition Related to the City's Annual Opioid Settlement Funds for Use by the PACE Coalition in Cooperation with the Wendover Prevention Group/Tooele County Health Department in Meeting the Necessary Goals for the Opioid Settlement Funds and those of the Wendover Prevention Group and Other Matters Appropriately Related Thereto (For Possible Action)**

Report By City Manager

Review/Comment/Action: City Council

b. **Presentation, Discussion and Decision Regarding the Community Support and Local School Grant Application for the West Wendover High School Football Team Equipment Project and Other Matters Appropriately Related Thereto (For Possible Action)**

Report By Gregory Smith or WWMS Representative and City Clerk

Review/Comment/Action: City Council

c. **Presentation, Discussion and Decision Regarding the Community Support and Local School Grant Application for the West Wendover High School Football Team Equipment Project and Other Matters Appropriately Related Thereto (For Possible Action)**

Report By Craig Kyllonen or WWHS Representative and City Clerk

Review/Comment/Action: City Council

d. **Discussion and Decision to Provide Conceptual Site Plan Approval for the LV Petroleum Black Bear Diner Project, Parcel APN # 101-740-111 and Generally Located at 1144 N. Florence Way and Other Matters Appropriately Related Thereto (For Possible Action)**

Report By City Manager

Review/Comment/Action: City Council

e. **Discussion and Decision to Provide Approval for the Proposed Parcel Map for Wendover Christian Fellowship APN #010-740-0BD, Located in Section 18, Township 33 N., Range 70 E., M.D.B.&M. and Generally Located at 2877 Tibbets Boulevard, West Wendover, Nevada 89883 (For Possible Action)**

Report By City Manager

Review/Comment/Action: City Council

f. **Discussion and Decision to Approve the Nonexclusive Telecommunications Franchise Agreement Between Uprise LLC a Nevada Limited Liability Company / dba Uprise Fiber and the City of West Wendover Related to Services to be Provided in the City of West Wendover and Authorize the Execution of Such Agreement and/or Other Documents Related Thereto and Other Matters Appropriately Related Thereto (For Possible Action)**

Report By City Manager

Review/Comment/Action: City Council

8. CONSENT CALENDAR

a. **Discussion and Decision to Adopt Resolution #2022-13; A Resolution Establishing a 'Sweep' Account for the West Wendover General Account Pursuant to N.R.S. 354.609 (For Possible Action)**

Report By Chief Financial Officer

Review/Comment/Action: City Council

9. DEPARTMENT REPORTS

1. **Fire Chief**
2. **Police Chief**
3. **City Clerk/Records Officer**
4. **Chief Financial Officer**
5. **Public Works Director**
6. **City Manager**

10. COMMUNICATIONS

a. **Reports by Elected Officials**

11. APPROVAL OF THE CLAIMS

a. **Claims for November 1, 2022 (For Possible Action)**

12. COMMENTS FROM THE GENERAL PUBLIC

Requires a sign in sheet and request of the Council to speak, limitation of three minutes.

13. NEXT MEETING DATE AND ADJOURNMENT

a. **Adjournment (For Possible Action)**

This notice is posted at the following locations:
West Wendover City Hall, West Wendover Library,
Smith's Food & Drug, Nevada Post Office

Members of the public who are disabled and require special accommodations or assistance at the meeting are requested to notify the City Clerk in writing at the City of West Wendover, 1111 N. Gene L. Jones Way, P.O. Box 2825, West Wendover, Nevada, or by calling (775) 664-3081.

CITY OF WEST WENDOVER
P.O. Box 2825 • 1111 N. Gene L. Jones Way • West Wendover, NV 89883
Office (775) 664-3081 Fax (775) 664-3720

PUBLIC MEETING NOTICE

The West Wendover City Council will meet in a regular session on November 1, 2022, at the West Wendover City Hall, Council Chambers Room #137 at 7:00 p.m. Attached with this notice is the agenda for said meeting of the Council. This notice is posted pursuant to N.R.S. 241 020 as amended by the 1997 Legislature. This notice is posted at the following places no later than October 26, 2022.

WEST WENDOVER CITY HALL
WEST WENDOVER BRANCH LIBRARY
SMITH'S FOOD & DRUG STORE
WEST WENDOVER POST OFFICE

NOTICE TO PERSONS WITH DISABILITIES

Members of the public who are disabled and require special accommodations or assistance at the meeting are requested to notify the City Clerk in writing at the City of West Wendover, 1111 N. Gene L. Jones Way, P.O. Box 2825, West Wendover, Nevada, or by calling (775) 664-3081.

"The City of West Wendover is an equal opportunity provider."

CITY OF WEST WENDOVER
P.O. Box 2825 • 1111 N. Gene L. Jones Way • West Wendover, NV 89883
Office (775) 664-3081 Fax (775) 664-3720

WEST WENDOVER CITY COUNCIL, MINUTES OF THE REGULAR MEETING OF NOVEMBER 01, 2022

1. CALL TO ORDER AND ROLL CALL

Attendee Name	Title	Status	Arrived
Kathy Durham	Councilwoman	Present	
Nick Flores	Councilman	Present	
Izzy Gutierrez	Councilman	Present	
John B. Hanson	Councilman	Present	
Robert Trujillo	Councilman	Present	
Jasie Holm	Mayor	Present	
Cal Kunz	Chief of Police	Present	
Chris Melville	City Manager	Present	
Debbie Sanchez	Chief Financial Officer	Present	
Jeff Knudtson	Fire Chief	Present	
Raul Naranjo	Public Works Director	Present	
Anna Bartlome	City Clerk/Records Officer	Present	

Others Present: Laura Osland, Peter Clegg, Elizabeth Smith, Gregory Smith, Craig Kyllonen, Natalia Loll and Chris Lund

Mayor Holm called the meeting to order at 7:00 p.m. in the West Wendover City Hall, Council Chambers #137. All those present and excused are noted above.

2. PLEDGE OF ALLEGIANCE

Mayor Holm led those present in the Pledge of Allegiance.

3. COMMENTS FROM THE GENERAL PUBLIC

None offered or received.

4. APPROVAL OF THE MINUTES (For Possible Action)

a. City Council - Special Meeting - Oct 18, 2022 6:30 PM

RESULT:	**ACCEPTED [UNANIMOUS]**
MOVER:	Izzy Gutierrez, Councilman
SECONDER:	Kathy Durham, Councilwoman
AYES:	Durham, Flores, Gutierrez, Hanson, Trujillo

b. City Council - Regular Meeting - Oct 18, 2022 7:00 PM

Council Member Gutierrez made a motion to approve the minutes of the special meeting of October 18, 2022 and the minutes of the regular meeting of October 18, 2022. The motion was seconded by Council Member Durham and passed unanimously.

Agenda taken out of order, Consent Calendar heard next, see below.

RESULT:	**ACCEPTED [UNANIMOUS]**
MOVER:	Izzy Gutierrez, Councilman
SECONDER:	Kathy Durham, Councilwoman
AYES:	Durham, Flores, Gutierrez, Hanson, Trujillo

5. PUBLIC HEARING

NOTICE IS HEREBY GIVEN that the City of West Wendover will conduct a public hearing on November 1, 2022 at 7:05 p.m. at the West Wendover City Hall, Council Chambers #137 in order to discuss possible applications for funding under the next fiscal year's State Community Development Block Grant (CDBG) Program and to solicit citizen input on possible activities to be included in the application. All persons may attend and be heard. Prior to the hearing, written comments may be filed with the West Wendover City Clerk and will be considered at the meeting.

The purpose of this public hearing is to discuss comments received on potential applications, and approve and rank applications prior to submittal to the State.

If you are unable to attend the public hearing, written comments may be directed to the City of West Wendover, P.O. Box 2825, West Wendover, Nevada 89883, or you may telephone Anna Bartlome at 775-664-3081. In addition, information is available for review at the City offices (1111 N. Gene L. Jones Way) and is available for public inspection during normal business hours, from August 2, 2022 to November 1, 2022.

The City of West Wendover promotes fair housing and makes all its programs available to low and moderate income families regardless of age, race, color, relation, sex, national origin, sexual preference, marital status or handicap. The City of West Wendover does not discriminate on the handicapped status in the admission of access to, treatment, employment or activities in it's federally assisted programs.

Persons with disabilities who require special accommodations or assistance at the meeting should notify the City Clerks Office at 775-664-3081 or at 1111 N. Gene L. Jones Way, West Wendover, Nevada, 89883.

Mayor Holm closed the regular portion of the meeting and opened the public hearing portion of the meeting.

Chris Melville explained that this is the last public hearing for the CDBG process. The first public hearing reviews the CDBG program, the second hearing indicates potential projects that are being considered and to receive input on any additional projects, and the final hearing is to put forth any project(s) with a decision by Council on filing an application. Chris explained that during this process the City has had one project which is the Fire Station/EOC

Project. Chris explained that the Fire Station/EOC Project had been proposed to CDBG to see if it meet the initial eligibility and he was notified on October 31, 2022 that it had been approved for eligibility. Chris explained that the formal application is due to CDBG by February 17, 2023. Chris explained the project which included the location of the facility, size of facility, cost of project and funding sources.

Mayor Holm asked who is on the City's team not including the design/build team. Chris explained that the team included himself, Fire Chief Knudtson, Public Works Director Naranjo and our City Engineers. The design/build team includes an additional twelve to fourteen people.

Council Member Durham stated that she cannot believe how long the process is to build a facility. Chris stated that he had a question as to why the City had not built the Fire Station yet and he had explained that it is mainly funding but COVID and supply chain issues did not help the process.

There being no public comment Mayor Holm closed the public hearing and opened the regular portion of the meeting.

1. **Discussion and Decision for Selection and Approval of a Project for the Community Development Block Grant Program 2023, and Authorization for Staff to Prepare and Mayor to Execute Any Such Applications, Documents or Agreements as Necessary for the Selected Project and Other Matters Appropriately Related Thereto (For Possible Action)**

Council Member Durham made a motion to select and approve the Fire Station/EOC project for the Community Development Block Grant Program 2023, and authorize for staff to prepare and Mayor to execute any such applications, documents or agreements as necessary for the selected project. The motion was seconded by Council Member Hanson and passed unanimously.

RESULT:	**APPROVED [UNANIMOUS]**
MOVER:	Kathy Durham, Councilwoman
SECONDER:	John B. Hanson, Councilman
AYES:	Durham, Flores, Gutierrez, Hanson, Trujillo

6. PRESENTATION

a. **Presentation by Wendover Prevention Group/PACE Coalation Regarding a Proposal on the Use of the City's Annual Opioid Settlement Funds**

Chris Melville explained that Peter Clegg and Laura Osland would be giving a brief presentation on how the Wendover Prevention Group and the PACE Coalition will be using the settlement funds from the opioid lawsuit. Chris stated that with the funds from the opioid settlement except for the first year are around $4,000.00 per year. Chris stated that the Wendover Prevention Group and PACE Coalition was seen as one of the best ways that the City could commit the funds, meet the obligation of the settlement and use the funds to educate and assist the public with the opioid crisis.

Peter Clegg and Laura Osland explained that the proposal includes activities such as West Wendover Opioid Summit and Naloxone Training, implementing Botvin LifeSkills training,

training for coalition members to attend Community Anti-Drug Coalitions of America and community events. The PACE Coalition would be the fiscally responsible entity with the funding going through their agency. Peter stated that they could do oral or written reports to show how the funding is being used throughout the year.

Mayor Holm stated that she thinks the collaboration between the Wendover Prevention Group and the PACE Coalition is great and she could not think of a better place for the opioid settlement funding to go. Council Member Durham stated that when the meetings happened to discuss the lawsuit it seemed like there would be all this money that you could potentially get. Council Member Durham stated that after the settlement there was some money that had to be spent a specific way and having a group that can steward the money into programs that will help both communities is great.

Chris explained that the funding agreement and proposal would need to be brought back to a future agenda for adoption.

7. NEW BUSINESS

a. Discussion and Decision to Approve a Funding Agreement with the PACE Coalition Related to the City's Annual Opioid Settlement Funds for Use by the PACE Coalition in Cooperation with the Wendover Prevention Group/Tooele County Health Department in Meeting the Necessary Goals for the Opioid Settlement Funds and those of the Wendover Prevention Group and Other Matters Appropriately Related Thereto (For Possible Action)

Report By City Manager

Review/Comment/Action: City Council

Chris Melville explained

b. Presentation, Discussion and Decision Regarding the Community Support and Local School Grant Application for the West Wendover High School Football Team Equipment Project and Other Matters Appropriately Related Thereto (For Possible Action)

Report By Gregory Smith or WWMS Representative and City Clerk

Review/Comment/Action: City Council

Gregory Smith explained that the application would be for cameras and equipment for the West Wendover Middle School. The idea is to help keep an eye on the students as a preventative measure and to help keep everyone safe. Craig Kyllonen withdrew the Community Support and Local School Grant Application for consideration at this time.

General discussion was had regarding the application submitted by West Wendover Middle School for camera equipment, cost of project, if the project can move forward with partial funding, and if there is the potential of additional funding from other agencies.

Council Member Durham made a motion to contribute $20,000.00 regarding the Community Support and Local School Grant Application for the West Wendover Middle School Camera Equipment Project. The motion was seconded by Council Member Trujillo and passed. Council Member Gutierrez voted nay.

RESULT:	**APPROVED [4 TO 1]**
MOVER:	Nick Flores, Councilman
SECONDER:	Robert Trujillo, Councilman
AYES:	Kathy Durham, Nick Flores, John B. Hanson, Robert Trujillo
NAYS:	Izzy Gutierrez

c. **Presentation, Discussion and Decision Regarding the Community Support and Local School Grant Application for the West Wendover High School Football Team Equipment Project and Other Matters Appropriately Related Thereto (For Possible Action)**

Report By Craig Kyllonen or WWHS Representative and City Clerk

Review/Comment/Action: City Council

Craig Kyllonen withdrew the Community Support and Local School Grant Application for consideration.

d. **Discussion and Decision to Provide Conceptual Site Plan Approval for the LV Petroleum Black Bear Diner Project, Parcel APN # 101-740-111 and Generally Located at 1144 N. Florence Way and Other Matters Appropriately Related Thereto (For Possible Action)**

Report By City Manager

Review/Comment/Action: City Council

Chris Melville explained that he has provided the conceptual site plan for the LV Petroleum Black Bear Diner Project and the preliminary site plan will be on the November 15th agenda.

Council Member Durham made a motion to provide conceptual site plan approval for the LV Petroleum Black Bear Diner Project, Parcel APN #101-740-111 and generally located at 1144 N. Florence Way. The motion was seconded by Council Member Flores and passed unanimously.

RESULT:	**APPROVED [UNANIMOUS]**
MOVER:	Kathy Durham, Councilwoman
SECONDER:	Nick Flores, Councilman
AYES:	Durham, Flores, Gutierrez, Hanson, Trujillo

e. **Discussion and Decision to Provide Approval for the Proposed Parcel Map for Wendover Christian Fellowship APN #010-740-0BD, Located in Section 18, Township 33 N., Range 70 E., M.D.B.&M. and Generally Located at 2877 Tibbets Boulevard, West Wendover, Nevada 89883 (For Possible Action)**

Report By City Manager

Review/Comment/Action: City Council

Chris Melville explained that he has provided the final draft parcel map that would split the parcel into two pieces. Chris stated that Wendover Christian Fellowship Church had mentioned splitting the parcel years ago but are just now getting to that point. Chris asked that any motion be conditional upon the City Manager and City Engineer.

Chris Lund stated that by splitting the parcel the Wendover Christian Fellowship Church would be able to sell the one parcel for someone to build apartments on. Chris Lund stated that he hopes the church project will be complete soon and looking good.

Council Member Trujillo made a motion to approve the parcel map for Wendover Christian Fellowship APN #010-740-0BD, located in Section 18, Township 33 N., Range 70 E., M.D.B.&M. and generally located at 2877 Tibbets Boulevard, West Wendover, Nevada 89883 with final approval by the City Manager and City Engineer. The motion was seconded by Council Member Hanson and passed unanimously.

RESULT:	**APPROVED [UNANIMOUS]**
MOVER:	Robert Trujillo, Councilman
SECONDER:	John B. Hanson, Councilman
AYES:	Durham, Flores, Gutierrez, Hanson, Trujillo

f. Discussion and Decision to Approve the Nonexclusive Telecommunications Franchise Agreement Between Uprise LLC a Nevada Limited Liability Company / dba Uprise Fiber and the City of West Wendover Related to Services to be Provided in the City of West Wendover and Authorize the Execution of Such Agreement and/or Other Documents Related Thereto and Other Matters Appropriately Related Thereto (For Possible Action)

Report By City Manager

Review/Comment/Action: City Council

Chris Melville explained that Uprise Fiber is providing fiber service to the school facilities and would need to have a franchise agreement with the City. Chris stated that Uprise Fiber has executed the nonexclusive telecommunications franchise agreement and if approved will need to be signed by the Mayor. Chris stated that they would like to be underway before winter.

Council Member Durham disclosed that she works for Elko County School District but will not benefit by this item.

Council Member Durham made a motion to approve the Nonexclusive Telecommunications Franchise Agreement between Uprise LLC a Nevada Limited Liability Company / dba Uprise Fiber and the City of West Wendover related to services to be provided in the City of West Wendover and authorize the execution of such agreement and/or other documents related thereto. The motion was seconded by Council Member Flores and passed unanimously.

RESULT:	**APPROVED [UNANIMOUS]**
MOVER:	Kathy Durham, Councilwoman
SECONDER:	Nick Flores, Councilman
AYES:	Durham, Flores, Gutierrez, Hanson, Trujillo

8. CONSENT CALENDAR

a. Discussion and Decision to Adopt Resolution #2022-13; A Resolution Establishing a 'Sweep' Account for the West Wendover General Account Pursuant to N.R.S. 354.609 (For Possible Action)

Report By Chief Financial Officer

Review/Comment/Action: City Council

Debbie Sanchez explained that Nevada State Bank had contacted the City about opening a Sweep Account. The account would be attached to the City's direct deposit account and would operate in the background. The sweep account would take all the funds and earn interest 24/7. Debbie stated that at the time she wrote the memo interest was 2.99% but has now gone up. Debbie stated that the City has the potential to earn up to $30,000.00 a month in interest by opening the sweep account. Debbie explained that Nevada State Bank would charge a fee of $150.00 per month and earn .15 dividend. Debbie explained that the City can close the sweep account at any time.

Council Member Durham made a motion to adopt Resolution #2022-13; a resolution establishing a 'Sweep' Account for the West Wendover General Account pursuant to N.R.S. 354.609. The motion was seconded by Council Member Gutierrez and passed unanimously.

Agenda taken back in order, Public Hearing heard next, see above.

RESULT:	**ADOPTED [UNANIMOUS]**
MOVER:	Kathy Durham, Councilwoman
SECONDER:	Izzy Gutierrez, Councilman
AYES:	Durham, Flores, Gutierrez, Hanson, Trujillo

9. DEPARTMENT REPORTS

1. Fire Chief

Jeff Knudtson had nothing to add to his report.

2. Police Chief

Cal Kunz had nothing to add to his report.

Mayor Holm wished Cal a Happy Birthday.

3. City Clerk/Records Officer

Anna Bartlome had nothing to add to her memo.

4. Chief Financial Officer

Debbie Sanchez had nothing to add to her memo.

5. Public Works Director

Raul Naranjo had nothing to add to his memo.

6. City Manager

Chris Melville explained that the TA Truck Stop is still in process as they are currently working with NDOT for approval of the drainage study, traffic study and the tie-in of the old Frontage Road. The Vertical Horizon Project has completed their approval of the Conex facility and the green house plans are being submitted. Chris stated that Deep Roots has put their project on hold at this time. Chris stated that a pre-construction meeting for the Downtown Infrastructure Project has been held and a notice to proceed should be issued in

December.

10. COMMUNICATIONS

a. Reports by Elected Officials

Council Member Durham stated that the Elko County School Board meeting had been held in West Wendover on October 25, 2022. Council Member Durham stated that one of the academy classes met with the superintendent and had a very open dialog about how we feel in West Wendover so far removed from the district. Council Member Durham reminded everyone of the election on November 8th and hoped everyone would vote. Council Member Durham wished all the candidates well and hope they fulfill their obligations well. Council Member Durham stated that the poker tournament for Shop with Cop is Thursday (November 3rd).

Council Member Gutierrez thanked all the Department Heads and their staff for all they do. Council Member Gutierrez apologized to Mr. Smith as it was not his intention to make any one uncomfortable. Council Member Gutierrez stated that with the Community Support and Local School Grant process we may need to regroup and come up with a solution. Council Member Gutierrez wished the candidates good luck in the upcoming election.

Council Member Flores thanked all the Department Heads for all they do. Council Member Flores apologized to Mr. Smith for what he went through as it is not something he should have gone through. Council Member Flores thanked the PACE Coalition and the Wendover Prevention Group for their presentation.

Council Member Trujillo thanked the Department Heads for all they do. Council Member Trujillo apologized to Mr. Smith. Council Member Trujillo wished everyone running for election good luck.

Council Member Hanson thanked the Department Heads for all they do. Council Member Hanson apologized to Mr. Smith. Council Member Hanson stated that it is very uncomfortable on the Council when you have to turn down something that you know is needed. Council Member Hanson hoped everyone had a good evening and thanked the audience for being present.

Mayor Holm stated that she will be meeting with the Department of Health and Welfare Division on Friday (November 4th) to discuss them coming twice a month in which they would be able to approve food stamps or the snap card that same day. Mayor Holm thanked the Wendover Prevention Group and the PACE Coalition for their presentation as she is really happy that all the work that has happened up to this point will be of some benefit. Mayor Holm stated that they did not want to make anyone uncomfortable they are just trying to figure out how to move forward. Mayor Holm thanked the Department Heads for all they do.

11. APPROVAL OF THE CLAIMS

a. Claims for November 1, 2022 (For Possible Action)

Council Member Flores made a motion to approve the claims for November 1, 2022. The motion was seconded by Council Member Gutierrez and passed unanimously.

RESULT:	**APPROVED [UNANIMOUS]**
MOVER:	Nick Flores, Councilman
SECONDER:	Izzy Gutierrez, Councilman
AYES:	Durham, Flores, Gutierrez, Hanson, Trujillo

12. COMMENTS FROM THE GENERAL PUBLIC

None offered or received.

13. NEXT MEETING DATE AND ADJOURNMENT

a. Motion to: **Adjournment (For Possible Action)**

The next meeting date is a regular meeting on November 15, 2022 at 7:00 p.m. in the West Wendover City Hall, Council Chambers #137. Council Member Gutierrez made a motion to adjourn at 8:40 p.m. The motion was seconded by Council Member and passed unanimously.

RESULT:	**ADOPTED [UNANIMOUS]**
MOVER:	Izzy Gutierrez, Councilman
SECONDER:	Kathy Durham, Councilwoman
AYES:	Durham, Flores, Gutierrez, Hanson, Trujillo

ATTEST:

Anna E. Bartlome
City Clerk/Records Officer

United States Department of Agriculture

Rural Development

Nevada State Office

1390 South Curry St.
Carson City, NV
89703

Voice 775.887.1222
Fax 855.816.1209

October 1, 2018

City of West Wendover
Attn: Chris Melville
1111 N. Gene L. Way
West Wendover, NV 89883

RE: Application for USDA Rural Development Funding – Fire Station Project

Dear Mr. Melville,

Enclosed for your records is a copy of the approved RD Form 1940-1 Request for Obligation of Funds for the loan amount of $8,906,800. As of October 1, 2018, funds have been obligated and are available for the project.

If you have any questions, please contact Cheryl Couch at 775-887-1222, ext. 4760 or by email at Cheryl.couch@usda.gov.

Sincerely,

Sharon Goodwin
Community Programs Technician

Enclosures

USDA is an equal opportunity provider, employer and lender.

USDA
Form RD 1940-1
(Rev. 06-10)

REQUEST FOR OBLIGATION OF FUNDS

FORM APPROVED
OMB No. 0570-0062

INSTRUCTIONS-TYPE IN CAPITALIZED ELITE TYPE IN SPACES MARKED ( )
Complete Items 1 through 29 and applicable Items 30 through 34. See FMI.

1. CASE NUMBER ST CO BORROWER ID 33-004-*****2071	LOAN NUMBER 25	FISCAL YEAR 18
2. BORROWER NAME City of West Wendover	3. NUMBER NAME FIELDS *(1, 2, or 3 from Item 2)*	
	4. STATE NAME Nevada	
	5. COUNTY NAME Elko	

GENERAL BORROWER/LOAN INFORMATION

6. RACE/ETHNIC CLASSIFICATION 1 - WHITE 4 - HISPANIC 2 - BLACK 5 - A/PI 3 - AI/AN	7. TYPE OF APPLICANT 1 - INDIVIDUAL 6 - ORG. OF FARMERS 2 - PARTNERSHIP 7 - NONPROFIT-SECULAR 3 - CORPORATION 8 - NONPROFIT-FAITH BASED 4 - PUBLIC BODY 9 - INDIAN TRIBE 4 - 5 - ASSOC. OF FARMERS 10-PUBLIC COLLEGE/UNIVERSITY 11-OTHER	8. COLLATERAL CODE 1- REAL ESTATE SECURED 4 - MACHINERY ONLY 2-REAL ESTATE AND CHATTEL 5 - LIVESTOCK ONLY 6 - CROPS ONLY 7 - SECURED BY BONDS 3 - 3 - NOTE ONLY OR CHATTEL ONLY 8 - RLF ACCT	9. EMPLOYEE RELATIONSHIP CODE 1 - EMPLOYEE 2 - MEMBER OF FAMILY 3 - CLOSE RELATIVE 4 - ASSOC.

10. SEX CODE 6 - 1 - MALE 3 - FAMILY UNIT 4 - ORGAN. MALE OWNED 2 - FEMALE 5 - ORGAN FEMALE OWNED 6 - PUBLIC BODY	11. MARITAL STATUS 1 - MARRIED 3 - UNMARRIED (INCLUDES WIDOWED/DIVORCED) 2 - SEPARATED	12. VETERAN CODE 1 -YES 2 -NO	13. CREDIT REPORT 2 - 1 -YES 2 -NO

14. DIRECT PAYMENT 2 *(See FMI)*	15. TYPE OF PAYMENT 1 - 1 - MONTHLY 3 - SEMI-ANNUALLY 2 - ANNUALLY 4 - QUARTERLY	16. FEE INSPECTION 2 - 1 -YES 2 - NO	

17. COMMUNITY SIZE 1 - 10 000 OR LESS (FOR SFH AND 2 - OVER 10,000 HPG ONLY)	18. USE OF FUNDS CODE (See FMI)

COMPLETE FOR OBLIGATION OF FUNDS

19. TYPE OF ASSISTANCE 075 *(See FMI)*	20. PURPOSE CODE 1	21. SOURCE OF FUNDS	22. TYPE OF ACTION 1 -OBLIGATION ONLY 2 - OBLIGATION/CHECK REQUEST 3 - CORRECTION OF OBLIGATION

23. TYPE OF SUBMISSION 1 - INITIAL 2 - 2 -SUBSEQUENT	24. AMOUNT OF LOAN $8,906,800.00	25. AMOUNT OF GRANT

26. AMOUNT OF IMMEDIATE ADVANCE	27. DATE OF APPROVAL MO DAY YR 09 25 2018	28. INTEREST RATE 3.875 %	29. REPAYMENT TERMS 38

COMPLETE FOR COMMUNITY PROGRAM AND CERTAIN MULTIPLE-FAMILY HOUSING LOANS

30. PROFIT TYPE 2 - LIMITED PROFIT 1 - FULL PROFIT 3 - NONPROFIT	

COMPLETE FOR EM LOANS ONLY	COMPLETE FOR CREDIT SALE-ASSUMPTION
31. DISASTER DESIGNATION NUMBER *(See FMI)*	32. TYPE OF SALE 2 - ASSUMPTION ONLY 4 -ASSUMPTION WITH SUBSEQUENT LOAN 1 -CREDIT SALE ONLY 3 -CREDIT SALE WITH SUBSEQUENT LOAN

FINANCE OFFICE USE ONLY	COMPLETE FOR FP LOANS ONLY
33. OBLIGATION DATE MO DA YR	34. BEGINNING FARMER/RANCHER *(See FMI)*

If the decision contained above in this form results in denial, reduction or cancellation of USDA assistance, you may appeal this decision and have a hearing or you may request a review in lieu of a hearing. Please use the form we have included for this purpose.

Position 2

ORIGINAL - Borrower's Case Folder **COPY 1 - Finance Office** **COPY 2 - Applicant/Lender** **COPY 3 - State Office**

According to the Paperwork Reduction Act of 1995, an agency may not conduct or sponsor, and a person is not required to respond to a collection of information unless it displays a valid OMB control number. The valid OMB control number for this information collection is 0570-0062. The time required to complete this information collection is estimated to average 15 minutes per response, including the time for reviewing instructions, searching existing data sources, gathering and maintaining the data needed, and completing and reviewing the collection of information.

CERTIFICATION APPROVAL

For All Farmers Programs

EM, OL, FO, and SW Loans

This loan is approved subject to the availability of funds. If this loan does not close for any reason within 90 days from the date of approval on this document, the approval official will request updated eligibility information. The undersigned loan applicant agrees that the approval official will have 14 working days to review any updated information prior to submitting this document for obligation of funds. If there have been significant changes that may affect eligibility, a decision as to eligibility and feasibility will be made within 30 days from the time the applicant provides the necessary information.

If this is a loan approval for which a lien and/or title search is necessary, the undersigned applicant agrees that the 15-working-day loan closing requirement may be exceeded for the purposes of the applicant's legal representative completing title work and completing loan closing.

35. COMMENTS AND REQUIREMENTS OF CERTIFYING OFFICIAL

Subject to meeting the conditions of the letter of conditions dated 09/24/2018.

36. I HEREBY CERTIFY that I am unable to obtain sufficient credit elsewhere to finance my actual needs at reasonable rates and terms, taking into consideration prevailing private and cooperative rates and terms in or near my community for loans for similar purposes and periods of time. I agree to use the sum specified herein, subject to and in accordance with regulations applicable to the type of assistance indicated above, and request payment of such sum. I agree to report to USDA any material adverse changes, financial or otherwise, that occur prior to loan closing. I certify that no part of the sum specified herein has been received. I have reviewed the loan approval requirements and comments associated with this loan request and agree to comply with these provisions.

(For FP loans at eligible terms only) If this loan is approved, I elect the interest rate to be charged on my loan to be the lower of the interest rate in effect at the time of loan approval or loan closing. If I check "NO", the interest rate charged on my loan will be the rate specified in Item 28 of this form. X YES _____ NO

WARNING: **Whoever, in any matter within the jurisdiction of any department or agency of the United States knowingly and willfully falsifies, conceals or covers up by any trick, scheme, or device a material fact, or makes any false, fictitious or fraudulent statements or representations, or makes or uses any false writing or document knowing the same to contain any false, fictitious or fraudulent statement or entry, shall be fined under this title or imprisoned not more than five years, or both."**

Date September 24, 20 18

Daniel Corona, Mayor

(Signature of Applicant)

Date _____, 20 ____

(Signature of Co-Applicant)

37. I HEREBY CERTIFY that all of the committee and administrative determinations and certifications required by regulations prerequisite to providing assistance of the type indicated above have been made and that evidence thereof is in the docket, and that all requirements of pertinent regulations have been complied with. I hereby approve the above-described assistance in the amount set forth above, and by this document, subject to the availability of funds, the Government agrees to advance such amount to the applicant for the purpose of and subject to the availability prescribed by regulations applicable to this type of assistance.

Cheryl Couch

(Signature of Approving Official)

Typed or Printed Name: Cheryl Couch

Date Approved: 09/25/18

Title: Commuity Programs Director

38. TO THE APPLICANT: As of this date 10/01/2018, this is notice that your application for financial assistance from the USDA has been approved, as indicated above, subject to the availability of funds and other conditions required by the USDA. If you have any questions contact the appropriate USDA Servicing Office.

1940-1 Attachment

City of West Wendover
Borrower Name

Fire Station
Project

"The grantee understands the requirements for receipt of funds under the Community Facilities Grant program. The grantee assures and certifies that it is in compliance with all applicable laws, regulations, Executive Orders, and other applicable requirements, including those set forth in Form RD 3570-3, 7 CFR parts 3015, 3016, or 3019 as subsequently modified, and the letter of conditions.

"The grantee understands that any property acquired or improved with Federal grant funds may have use and disposition conditions which apply to the property as provided by 7 CFR parts 3015, 3016, or 3019 in effect at this time an as may be subsequently modified."

"The grantee understands that any sale or transfer of property is subject to the interest of the United States Government in the market value in proportion to its participation in the project as provided by 7 CFR parts 3015, 3016, or 3019 in effect at this time and as may be subsequently modified."

Grantee Acknowledgement:

Authorized Signature

9/24/18
Date

EXHIBIT 3-02
USDA Grant
LOC Amendment

September 28, 2022

City of West Wendover
Jasie Holm, Mayor
PO Box 2825
1111 Gene L Jones Way
West Wendover NV 89883

Re: Amendment #1 to Letter of Conditions for a Community Facilities Program Loan/Grant to West Wendover Fire Station dated September 24, 2018

CFDA Number – 10.766 Community Facilities Loans and Grants
Loan : $8,906,800
Grant: $ 200,000

This is an Amendment #1 to the Letter of Conditions issued 09-24-2018. This amendment is to update the funding sources, project budget and additional conditions related directly to the grant. All text in italics indicates a change to the original Letter of Conditions.

This letter, with attachments, establishes conditions that must be understood and agreed to by the applicant before further consideration may be given to the application for Federal Assistance. The State and Area Office staff of USDA Rural Development (RD) will administer the loan and/or grant funds for this project on behalf of the Rural Housing Service. All parties may access information and regulations referenced in this letter at our website located at: https://www.rd.usda.gov/programs-services/community-facilities. Any changes in project cost, source of funds, scope of services, or any other significant change (this includes significant changes in the Borrower's financial condition, operation, organizational structure or executive leadership) in the project or applicant must be reported to and approved by USDA Rural Development by written amendment to this letter. **Any changes not approved by USDA Rural Development will be cause for discontinuing processing of the application**. If you do not meet the conditions of this letter, the Agency reserves the right to withdraw Agency funding.

This letter is not to be considered as grant approval or as representation to the availability of the additional funds. The application can be processed on the basis of a USDA Rural Development grant not to exceed $200,000. Funds for this project are provided by the Rural Housing Service (RHS).

The grant will be considered approved on the date Form RD 1940-1, "Request for Obligation of Funds," is returned by USDA Rural Development.

USDA is an equal opportunity provider, employer and lender.

Project Budget—*Based on Standard Form 424, "Application for Federal Assistance," the project cost and funding will be as follows:*

a.	Project Cost	Total	USDA Loan	USDA Grant	Other
	Land/Right-of-Ways	*$ 840,000*	*$ 840,000*		
	Preliminary Design	*$ 75,000*	*$ 75,000*		
	Design Architectural Fees	*$ 786,679*	*$ 786,679*		
	Construction	*$12,525,459*	*$6,952,854*	*$200,000*	*$5,372,605*
	Cost for Interim Loan	*$ 77,267*	*$ 77,267*		
	Bond Counsel	*$ 75,000*	*$ 75,000*		
	Interest	*$ 100,000*	*$ 100,000*		
	Contingencies	*$ 294,417*			*$ 294,417*
	TOTAL:	*$14,773,822*	*$ 8,906,800*	*$200,000*	*$5,667,022*

b.	Source of Funds	
	USDA Loan	*$ 8,906,800*
	USDA Grant	*$ 200,000*
	Applicant Contribution	*$ 2,325,268*
	NV State Infrastructure Bank Or CDBG	*$ 3,341,754*
	TOTAL:	*$ 14,773,822*

Any changes in funding sources following obligation of Agency funds must be reported to the processing official. Project feasibility and funding will be reassessed if there is a significant change in project costs after bids are received. If actual project costs exceed the project cost estimates, an additional contribution by the borrower may be necessary.

In addition to the conditions in the Letter of Conditions dated September 24, 2018, the applicant must fully comply with all requirements on Form RD 3570-3, Community Facilities Grant Agreement and the attached conditions. The Agency reserves the right to cancel funds if the applicant does not fully comply with all requirements as presented or subsequently modified, as needed. In the event the project has not advanced to the point of construction within one (1) year, USDA Rural Development reserves the right to discontinue the processing of the application.

If you have any questions, feel free to contact this office.

Sincerely,

GUSTIN WEGREN

Digitally signed by GUSTIN WEGREN
Date: 2022.09.28 14:16:47 -07'00'

Gus Wegren
Community Programs Director

CC: Lucas Ingvoldstad, State Director, USDA RD – via email lucas.ingvoldstad@usda.gov
Chris Melville, City Manager – via email cmelville@westwendovercity.com
Craig Neely, Aqua Engineering – via email craign@aquaeng.com
Shay Stark, Aqua Engineering – via email shays@aquaeng.com
Kendra Follett Sherman & Howard, via email KFollett@shermanhoward.com
Gary DiGrazia, Gary DiGrazia, via email dclaws@frontiernet.net

ATTACHMENT TO LETTER OF CONDITIONS

SECTION I. CONDITIONS TO BE SATISFIED PRIOR TO LOAN/GRANT CLOSING OR BEFORE CONSTRUCTION BEGINS, WHICHEVER OCCURS FIRST

1. ***Suspension and Debarment Screening*** *– You will be asked to provide information on the principals of your organization. Agency staff must conduct screening for suspension and debarment of the entity, as well as its principals through the Do Not Pay Portal.*

    a. *Principal –*
        i. *An officer, director, owner, partner, principal investigator, or other person within a participant with management or supervisory responsibilities related to a covered transaction; or*
        ii. *A consultant or other person, whether or not employed by the participant or paid with federal funds, who –*
            1. *Is in a position to handle federal funds;*
            2. *Is in a position to influence or control the use of those funds; or,*
            3. *Occupies a technical or professional position capable of substantially influencing the development or outcome of an activity required to perform the covered transaction. (2 CFR §180.995)*

2. ***Disbursement of Funds***

    a. *The applicant will provide evidence that funds from other sources will be made available for the project cost in the amount of $3,341,754. This evidence should include a copy of the loan/grant award that addresses how funds will be disbursed.*

    b. *The applicant's contribution will be reassessed when guaranteed maximum price is established.*

    c. *Agency funds will not be used to pre-finance funds committed to the project from other sources.*

3. ***Security Requirements***

    a. *At loan closing the applicant will execute the attached Form RD 1942-47, "Loan Resolution (Public Bodies)". Please note the refinancing provision in paragraph 2. Also, on page 3 there is a certification to be executed at loan closing.*

    b. *The applicant will be required to execute and complete Form RD 3570-03, "Agreement for Administrative Requirements for Community Facilities Grants" and "Notice of Federal Interest" at the time of grant closing*

    Prior to any disbursement of funds, a Notice of Federal Interest must be recorded in the official real property records for the jurisdiction where the facility is or will be

located. The applicant must provide evidence of the recording. Federal interest cannot be defeated by a grantee's failure to file a Notice of Federal Interest.

c. *The Notice of Federal Interest will remain recorded on the secured property after the loan is paid in full.*

d. *The grantee understands that any property acquired or improved with Federal grant funds may have use and disposition conditions which apply to the property as provided by 2 CFR part 200 in effect at this time and as may be subsequently modified.*

e. *The grantee understands that any sale or transfer of property is subject to the interest of the United States Government in the market value in proportion to its participation in the project as provided by 2 CFR part 200 in effect at this time and as may be subsequently modified.*

f. *In accordance with 2 CFR 200.330, the grantee understands that it must submit regular reports on the status of real property in which the Federal Government retains an interest. Reports shall be submitted annually for the first three years of the award and every five years thereafter on SF-429 Real Property Status Report, or similar format.*

c. *At loan closing, the applicant will execute the attached Form RD 1942-9 "Loan Resolution (Security Agreement)". Please review the refinancing provision on page 4, section 7. Also note the certification on the bottom of page 4, which is to be executed at the time of loan closing.*

SECTION II. [LOAN/GRANT] CONDITIONS TO BE SATISFIED DURING CONSTRUCTION

1. ***Disbursement of Grant Funds****—USDA Rural Development funds will be advanced as they are needed in the amount(s) necessary to cover the Rural Development proportionate share of obligation due and payable to the Grantee. Interest earned on grant funds in excess of $250 for Nonprofits and $100 for Public Bodies per year will be submitted to Rural Development at least quarterly, as required in 2 CFR part 200 as applicable.*

USDA is an equal opportunity provider, employer and lender.

101 North Carson Street
Carson City, Nevada 89701
Office: (775) 684-5670
Fax No.: (775) 684-5685

555 East Washington Avenue, Suite 5100
Las Vegas, Nevada 89101
Office: (702) 486-2500
Fax No.: (702) 486-2505

Office of the Governor

4/17/2023

The Honorable Jasie Holm
Mayor of the City of West Wendover
P.O. Box 2825
West Wendover, NV 89883

Dear Mayor Holm:

I am pleased to award $500,000 from the Nevada Community Development Block Grant (CDBG) Program to the City of West Wendover. Recently, rural communities submitted 13 eligible applications requesting $5,970,710.00 in funding from the CDBG program. The 2023 HUD allocation was $2,895,399.00. Therefore, not all projects were fully funded.

The funds awarded to the City of West Wendover are for the West Wendover Fire Station/EOC project $500,000.

Since 1982, CDBG funds have proven beneficial to communities throughout the state. Nevada's rural counties and small cities have been able to improve their quality of life by upgrading infrastructure, constructing facilities, and promoting economic development. Your project continues the worthwhile utilization of CDBG funds.

I wish you success with this project, which I know will benefit the residents of the City of West Wendover.

Sincere Regards,

JOE LOMBARDO
Governor

Nevada Governor's Office of
ECONOMIC DEVELOPMENT

808 West Nye Lane, Carson City, NV 89703
775.687.9900
www.goed.nv.gov

April 20, 2023

The Honorable Jasie Holm
Mayor of the City of West Wendover
P.O. Box 2825
West Wendover, NV 89883

Re: Community Development Block Grant Award

Dear Mayor Holm:

We are pleased to award a $500,000 grant from the Nevada Community Development Block Grant (CDBG) Program to City of West Wendover to assist with the following project:

- Fire Station/EOC Project: $500,000; 23/PF/04

Enclosed please find: (1) the Grant Award agreement and (2) a sample Certification Letter. Please sign the original Grant Award agreement and a Certification Letter. The letter must be printed on City of West Wendover's stationery. Submit the originals to CDBG office and retain copies for your grant file.

Please ensure that your grant administrator is familiar with the contents of the grant agreement. This document provides important, but frequently overlooked, requirements of the grant.

The environmental review (ER) requirements need to be met for this 2023 project. All prescribed ER documentation is due September 30, 2023 and must be approved by CDBG staff prior to issuance of the Notice to Proceed and implementation of the project.

Further, please note the following grant conditions:

1) Grant funds cannot be spent or otherwise obligated by the grantee until the CDBG Program Administrator issues a Notice to Proceed.

2) Any expenses incurred prior to the issuance of the Notice to Proceed may be ineligible for payment from grant funds, unless approved in advance by the CDBG Program Administrator.

3) The first draw down of funds must be made within nine months from the date of the grant award (March 31st). Spending grant monies expeditiously is important to CDBG and HUD. Early start-up and timely completion of the project are important and relevant to future grant allocations. As a general rule, the funds are only available within the specified grant period unless an extension is requested and received. Approval of an extension depends on the nature of the project delays.

4) Please ensure the requirements for Non-Discrimination/Equal Opportunity are met.

5) The Minority Business Enterprise Report, the Grantee's Notification of Contracts and Subcontracts Awarded, the Project Benefits Report, Final Financial documents, and Job Creation information are critical components of HUD's reporting requirements and necessary for grant closure. Please ensure that these forms are completed, where appropriate, and submitted to CDBG within 30 days of the completion of the project.

We look forward to working closely with you towards the successful and timely completion of your project. The Rural Community & Economic Development staff members are available for assistance should any problems arise and may be contacted at (775) 687-9900.

Sincerely,

Shari Davis
Director, Rural Economic and Community Development
Governor's Office of Economic Development

Cc: Chris Melville, Grant Administrator

Encl: Grant Agreement
Sample Certification Letter

Nevada Governor's Office of
ECONOMIC DEVELOPMENT

GRANT AGREEMENT

Nevada Governor's Office of Economic Development (GOED)
Rural Community and Economic Development Division
808 West Nye Lane, Carson City, Nevada 89703

1. PARTIES: This agreement is between the Nevada Governor's Office of Economic Development

Community Development Block Grant Program (CDBG): CFDA# 14.228 FAIN# B-23-DC-32-0001

CDBG Grant #: 23/PF/04 **Eligible Activity:** 105(a)(2) (Program) **National Objective:** LMI- Area Benefit

Referred to as STATE, and the following GRANTEE:

City of West Wendover Name			
P.O. Box 2825 Address	**West Wendover** City	**NV** State	**89883** Zip Code
88-0272071 UGLG EIN Number	**5N4R3** CCR (CAGE) Number		**H8KSC4WPK865** UEI Number
West Wendover Project Address	**West Wendover** City	**NV** State	**89883** Zip Code
Chris Melville, City Manager Contact Person (Name, Title)	**775-664-3081** Phone #	**775-664-3720** FAX #	
cmelville@westwendovercity.com Contact Person's Email			

2. GENERAL PURPOSE OF AGREEMENT:
Construction of a new Fire Station facility for the City of West Wendover, to be located west and adjacent to the West Wendover City Hall on N. Gene L. Jones Way, West Wendover, Nevada.

3. AGREEMENT PERIOD: Commencing on **7/1/2023** and terminating on **6/30/2025**.

4. AGREEMENT COSTS: GRANTEE will be paid a maximum of $500,000 pursuant to the budget attached hereto as Attachment E.

Funds by Year:

Year:	2023	$ 500,000
Year:		$
Year:		$

5. ATTACHMENTS:

- ATTACHMENT A – GENERAL PROVISIONS
- ATTACHMENT B – PROGRAM TERMS AND CONDITIONS
- ATTACHMENT C – SCOPE OF WORK
- ATTACHMENT D – IMPLEMENTATION SCHEDULE
- ATTACHMENT E - BUDGET
- ATTACHMENT F – FEDERAL ASSURANCES/CERTIFICATIONS

EXECUTION

IN ACCEPTING THESE FUNDS, IT IS UNDERSTOOD THAT:
1. This award is subject to the availability of appropriate funds.
2. Recipient of these funds agrees to the conditions of this Grant Agreement, including all Attachments which are hereby incorporated by reference.

IN WITNESS WHEREOF, the parties sign and cause this Grant Agreement to be effective as of the date indicated below.

GRANTEE

APPROVED: City of West Wendover

By: _____
Signature of Elected Official

Jasie Holm
Printed Name

Mayor
Title

STATE

APPROVED: GOED, RURAL COMMUNITY AND ECONOMIC DEVELOPMENT DIVISION

By: _____
Shari Davis, Director
NV Governor's Office of Economic Development
808 W. Nye Lane, Carson City, NV 89703
sadavis@goed.nv.gov
(775) 687-9911

Execution Date: 7/1/2023

ATTACHMENT A - GENERAL PROVISIONS

1. **AUTHORITY**: Provisions of this Agreement are pursuant to the authority set forth in the Nevada Revised Statutes chapters 231 and 332, and related statutes which permit the STATE to contract with service providers for certain specified services.

2. **CONTRACT JURISDICTION, CHOICE OF LAW AND VENUE**: The provisions of this agreement shall be governed by the laws of the State of Nevada. The parties shall submit to the jurisdiction of the courts of the State of Nevada for any dispute arising out of this Agreement or the breach thereof. Venue shall be in Carson City, in the First Judicial District Court.

3. **LAWS AND REGULATIONS**: The GRANTEE and any and all supplies, services, equipment, and construction proposed and furnished under this Agreement will comply fully with all applicable Federal and State laws and regulations.

4. **PROJECT DESIGN AND COMPLETION**: The GRANTEE will use the grant under this Agreement for the project as detailed in the Grant Application, including any written modifications resulting from the review of the Application by the STATE. The GRANTEE shall complete the project described in Attachment D - Scope of Work within the contract period shown on page 1 of this Agreement.

5. **RECORDS ADMINISTRATION**: The GRANTEE shall maintain, or supervise the maintenance of, all records necessary to properly account for the payments made to the GRANTEE pursuant to this Agreement. These records shall be retained by the GRANTEE for five years after the project has been monitored and closed. The GRANTEE agrees to allow State and Federal auditors, and State Agency Staff, access to all the records related to this Agreement, for audit and inspection, and monitoring of services. Such access will be during normal business hours, or by appointment.

6. **CONFLICT OF INTEREST**: GRANTEE represents that none of its officers or employees are officers or employees of the State of Nevada, unless disclosure has been made and approval received, in writing, from the STATE.

   GRANTEE confirms that no officer, employee or agent of the GRANTEE will participate in the selection or in the award or administration of a contract supported by Federal funds if a conflict of interest, real or apparent, would be involved. Such a conflict would arise when the officer, employee or agent, any member of his or her immediate family, his or her partner, or an organization that employs or is about to employ any of the above, has a financial or other interest in the firm selected to award. GRANTEE'S officers, employees or agents will neither solicit nor accept gratuities, favor or anything of monetary value from contractors, potential contractors, or parties to sub agreements during office tenure or for one year after the close out of the grant. This stipulation must be included in all other contracts and subcontracts to the grant.

   No portion of the grant funds under this Agreement will be used for any partisan political activity, to further the election or defeat of any candidate for public office, or influence the approval or defeat of any ballot issue.

7. **INDEPENDENT CONTRACTOR**: The GRANTEE shall be an independent contractor, and as such, shall have no authorization, express or implied, to bind the STATE to any agreements, settlements, liability, or understanding whatsoever, and agrees not to perform any acts as agent for the STATE, except as herein expressly set forth. Compensation stated herein shall be the total amount payable to the GRANTEE by the STATE. The GRANTEE shall be responsible for the payment of all taxes and social security amounts due as a result of payments received from the STATE for services under this Agreement. Persons employed by the STATE and acting under the direction of the STATE shall not be deemed to be employees or agents of the GRANTEE.

8. **INDEMNITY CLAUSE**: The GRANTEE agrees to indemnify, save harmless, and release the STATE of Nevada, and all its officers, agents, volunteers, and employees from and against any and all loss, damages, injury, liability, suits, and proceedings arising out of the performance of this Agreement which are caused in whole or in part by the negligence of the GRANTEE'S officers, agents, volunteers, or employees, but not for claims arising from the STATE's sole negligence.

9. **EQUAL OPPORTUNITY CLAUSE**: The GRANTEE agrees to abide by the provisions of Title VI and VII of the Civil Rights Act of 1984 (42USC 2000e) which prohibits discrimination against any employee or applicant for employment or any applicant or recipient of services, on the basis of race, religion, color, or national origin; and further agrees to abide by Executive Order No. 11246, as amended, which prohibits discrimination on the basis of sex; 45 CFR 90 which prohibits discrimination on the basis of age; and Section 504 of the Rehabilitation Act of 1973, or the Americans with Disabilities Act of 1990 which prohibits discrimination on the basis of disabilities, or the Nevada Revised Statute (NRS) 613.330 Equal Employment Opportunity.

10. **SEVERABILITY CLAUSE**: A declaration by any court, or any other binding legal source, that any provision of this Agreement is illegal and void shall not affect the legality and enforceability of any other provision of this Agreement, unless the provisions are mutually dependent.

11. **DEBARMENT**: The GRANTEE certifies that neither it nor its principals are presently debarred, suspended, proposed for debarment, declared ineligible, or voluntarily excluded from participation in this transaction (Agreement), by any governmental department or agency. If the GRANTEE cannot certify this statement, attach a written explanation for review by the STATE. The GRANTEE must notify the State Director of Rural Community and Economic Development within 30 days if debarred by any governmental entity during the Agreement period.

12. **TERMINATION**: This Agreement may be terminated, with cause by either party, in advance of the specified termination date, upon written notice being given by the other party. The party in violation will be given ten (10) working days after notification to correct and cease the violations, after which the Agreement may be terminated for cause. This Agreement may be terminated without cause, in advance of the specified expiration date, by either party, upon 90 days prior written notice being given the other party. On termination of this Agreement, all accounts and payments will be processed according to the financial arrangements set forth herein for approved services rendered to date of termination.

13. **NONAPPROPRIATION OF FUNDS**: The GRANTEE acknowledges that the STATE cannot contract for the payment of CDBG funds not provided by the federal government. If funding to the STATE is not provided as initially expected, the STATE may terminate this Agreement or proportionately reduce the services and the amount due from the STATE upon 30 days written notice. In the case that funds are not available or are reduced, the STATE will not be liable for any future commitments, penalties, or liquidated damages.

14. **WARRANTY**: The GRANTEE warrants that (a) all services shall be performed in conformity with the requirements of this Agreement by qualified personnel in accordance with generally recognized standards; and (b) all goods or products furnished pursuant to this Agreement shall be free from defects and shall conform to contract requirements. For any item that the STATE determines does not conform with the warranty, the STATE may arrange to have the services redone as needed, either by the GRANTEE or by a third party at the STATE'S option, at the GRANTEE'S expense.

15. **PAYMENT**: The GRANTEE must begin to draw funds within nine (9) months of the start of this Agreement. Extensions beyond the 9 month deadline will be made at the discretion of the STATE staff. The proportion of CDBG funds paid and applied to a specific activity will not exceed the proportion specified in the final budget as outlined in the approved Grant Application or Application modifications. The approved Application budget or modified budget is binding upon the GRANTEE. Should a budget revision be required after signing this Agreement, the request for revision must be submitted to the appropriate STATE staff for review and approval. Payments to the GRANTEE will normally be made within 30 days following the date completed Draw Requests and supporting documents are delivered to the STATE.

16. **PATENTS, COPYRIGHTS, ETC**: The GRANTEE will release, indemnify and hold the STATE, its officers, agents and employees harmless from liability of any kind or nature, including the GRANTEE'S use of any copyrighted or un-copyrighted composition, secret process, patented or un-patented invention, article or appliance furnished or used in the performance of this Agreement.

17. **ASSIGNMENT/SUBCONTRACT**: The GRANTEE will not assign, sell, transfer, subcontract or sublet rights, or delegate responsibilities under this Agreement, in whole or in part, without the prior written approval of the STATE.

18. **UNUSED FUNDS**: Any funds authorized by the STATE that are not used in the completion of Attachment D - Scope of Work must be de-obligated and returned to the STATE.

19. **INELIGIBLE EXPENSES**: GRANTEE expenditures under this Agreement determined by audit to be ineligible for reimbursement because they were not authorized by the terms and conditions of the Agreement or that are inadequately documented, and for which payment has been made to the GRANTEE will be immediately refunded to the STATE by the GRANTEE. The GRANTEE further agrees that the STATE shall have the right to withhold any or all subsequent payments under this Agreement to the GRANTEE until the recoupment of overpayments is made.

20. **PUBLIC INFORMATION**: Except as identified in writing and expressly approved by the STATE, GRANTEE agrees that this Agreement and related documents will be public documents, and may be available for distribution. GRANTEE gives the STATE express permission to make copies of the Agreement and related documents.

21. **PROCUREMENT STANDARDS AND ETHICS**: The GRANTEE will adopt procurement standards and code of conduct in keeping with the State of Nevada and Federal procurement standards and rules.

22. **DEFAULT AND REMEDIES**: Any of the following events will constitute cause for the STATE to declare GRANTEE in default of the Agreement: (1) Nonperformance of contractual requirements; or, (2) A material breach of any term or condition of this Agreement. The STATE will issue a written notice of default providing a ten (10) day period in which GRANTEE will have an opportunity to cure. Time allowed for cure will not diminish or eliminate GRANTEE'S liability for damages. If the default remains, after GRANTEE has been provided the opportunity to cure, the STATE may do one or more of the following: (1) Exercise any remedy provided by law; (2) Terminate this Agreement and any related contracts or portions thereof; (3) Impose liquidated damages, if liquidated damages are listed in the Agreement; (4) Suspend GRANTEE from applying for and receiving future grants.

23. **FORCE MAJEURE**: Neither party to this Agreement will be held responsible for delay or default caused by fire, riot, acts of God and/or war which is beyond that party's reasonable control. The STATE may terminate this Agreement after determining such delay or default will reasonably prevent successful performance of the Agreement.

24. **CONFLICT OF TERMS**: All Terms and Conditions that apply must be in writing and attached to the Agreement. No other Terms and Conditions will apply to this Agreement. In the event of any conflict in the Agreement Terms and Conditions, the order of precedence shall be: (1) Attachment A: General Provisions; (2) Agreement Signature Page(s); (3) Attachment B: Program Terms and Conditions; (4) Attachment E: Federal Assurances/Certifications.

25. **ENTIRE AGREEMENT**: This Agreement, including Attachments A through E, and documents incorporated hereunder, constitutes the entire agreement between the parties with respect to the subject matter, and supersedes any and all other prior and contemporaneous agreements and understandings between the parties, whether oral or written.

26. **AMENDMENT**: This Agreement may be altered, modified, or supplemented only by written amendment, executed by the parties hereto, and attached to the original signed copy of this Agreement. No claim for services furnished by the GRANTEE, not specifically authorized by this Agreement will be allowed by the STATE. ***Automatic renewals will not apply to this Agreement.***

27. **ACCOUNTING REPORTS**: The governing board of the GRANTEE is responsible to ensure that GRANTEE complies with all accounting reporting requirements in Federal Law and the Nevada Revised Statutes.

28. **PROHIBITION AGAINST PAYMENT OF BONUS OR COMMISSIONS**: The assistance provided under this Agreement will not be used for payment of any bonus or commission for the purpose of obtaining STATE approval of the Grant Application for such assistance, or STATE approval of applications for additional assistance. However, reasonable fees for consultant, managerial, or other services are eligible as project costs.

ATTACHMENT B - PROGRAM GENERAL CONDITIONS

1. **MONITORING**: The STATE will monitor GRANTEE'S performance in providing services and facilities in accordance with the purposes of this Agreement, and shall conduct at least one site visit during the contract period to inspect said performance. Criteria to be used in monitoring said performance includes compliance with the provisions of this Agreement and the degree to which GRANTEE meets the Federal and State objectives established for the Community Development Block Grant Program as specified in Title I of the Housing and Community Development Act of 1974 as amended from time to time, and as outlined in the CDBG Grant Administration Manual and other program training materials.

2. **CRITERIA DOCUMENTATION**: During the term of this Agreement, the GRANTEE agrees to supply any information to the STATE which the STATE may require. Specifically, the GRANTEE agrees to collect and analyze data pertaining to the manner in which work performed under this Agreement has (or will have) met one or more of the following criteria/HUD National Objectives:
    - benefit low and moderate income families;
    - aid in the prevention or elimination of slums or blight; and/or
    - meet other community development needs having a particular urgency because existing conditions pose a serious and immediate threat to the health or welfare of the community, and where other financial resources are not available to meet such needs.

    Failure by the GRANTEE to fulfill at least one of the HUD National Objectives may result in grant funds being returned to the STATE.

3. **ASSURANCES THAT OTHER SOURCES OF PROJECT FUNDS ARE SECURED**: The GRANTEE, prior to the commencement of expenditures authorized by this Agreement, agrees to provide to the STATE evidence that other sources of funds to be used for work described in the Scope of Work (if any) have been committed to the GRANTEE for the purpose of performing services and/or constructing facilities as described herein. The GRANTEE further agrees that all of the work described in Attachments C and D will be completed in a timely manner.

4. **COST PRINCIPLES AND ADMINISTRATIVE RULES**: The following state and federal requirements apply to the financial management function for local CDBG programs: 24 CFR Part 85 – Administrative Requirements for Grants & Cooperative Agreements to State, Local and Federally Recognized Indian Tribal Governments. This part establishes uniform administrative rules for Federal grants including guidance on financial administration, procedures for control and disposition of property, and retention of records.

5. **REQUIRED REPORTING OF FINANCIAL PERFORMANCE**: In accordance with OMB – Uniform Guidance, 2 CFR 200, *Audits of State, Local Governments and Non-Profit Organizations*, state and local governments or non-profit organizations that expend $750,000 or more in total federal financial assistance (from all sources) in the recipient's fiscal year shall have a Single Audit completed. Determining the amount of federal funds received shall be based on actual cash spent, not notice of an award or execution of this or any other agreements. Recipients that expend less than the federal assistance threshold are exempt from the Single Audit requirement. However, the recipient's financial records shall be available for review, monitoring or audit by appropriate officials of the federal granting agency, the Governor's Office of Economic Development, or other State of Nevada agency. Likewise, recipients may be asked to confirm in writing that their expenditure of federal funds did not exceed the designated threshold in the appropriate fiscal year. The audit shall be completed and submitted to the Governor's Office of Economic Development no later than nine (9) months after the end of the recipient's fiscal year.

6. **SERVICES AND PROJECT REPORTING REQUIREMENTS**: The GRANTEE agrees to perform those activities as specified in the Scope of Work and in compliance with all relevant Federal regulations pertaining to the Small Cities Community Development Block Grant Program. In performance of said services, GRANTEE further agrees to submit quarterly performance reports to the STATE, and other reports as specified by the STATE in formats designed by the STATE with all information compiled in compliance with paragraph 2 (above).

7. **IMPOSITION OF FEES, GENERATION AND DISPOSITION OF PROGRAM INCOME**: GRANTEE will not impose any fees for services rendered in connection with this Agreement.

    Program income generally means gross income received by the GRANTEE, or a sub-grantee of the GRANTEE, that is directly generated from the use of CDBG funds. Disposition of real or nonexpendable personal property acquired with CDBG funds must be handled in accordance with OMB Uniform Guidance. Notwithstanding any other provision of law, GRANTEE may at the STATE'S option retain any program income that is realized from the grant if (1) such income was realized after the initial disbursement of the funds received by GRANTEE, and (2) GRANTEE can satisfactorily demonstrate that the program income received will be applied to continue the activity from which income was derived, and (3) STATE gives explicit permission to retain such and authorizes it's distinct usage.

    Real property purchased with CDBG funds will be used to meet one of the HUD National Objectives for a minimum of five (5) years after grant close out. If the property is disposed of in less than 5 years, the STATE will be reimbursed in the amount of the current market value less any value of the property attributable to non-CDBG funds. If a change in use occurs within 5 years of close out, the STATE will need to review the change in use and determine appropriate measures to be taken.

8. **PAYMENT WITHHOLDING**: The GRANTEE agrees that the reporting and record keeping requirements specified in this Agreement are a material element of performance and that if, in the opinion of the STATE, GRANTEE'S record keeping practices and/or reporting to the STATE are not conducted in a timely and satisfactory manner, the STATE may withhold

part or all of the payments under this Agreement until such time as in the opinion of the STATE such deficiencies have been remedied. In the event of payment(s) being withheld, the STATE agrees to notify the GRANTEE in writing immediately upon denial of payment of the reasons for the denial and of the actions that the GRANTEE will need to take to bring about the release of withheld payments.

If any areas of non-compliance with CDBG regulations requiring correction on the part of the GRANTEE are noted, the STATE reserves the right to refuse the GRANTEE'S request for final fund draw-down until satisfactory evidence of compliance has been submitted.

9. **PROJECT DURATION**: GRANTEES should take note of the opening page of this Agreement which stipulates the duration of the Agreement. GRANTEES should make every effort possible to complete the project within the allotted time. If funds remain unspent at the end of the project period, but are needed to complete the project, GRANTEES should request an extension of the Agreement termination date in order to allow adequate time for completion of the project and submission of the final Draw Request and supporting information.

   The STATE will closely monitor each GRANTEE'S progress according to programmatic and jointly-established deadlines and expectations. If a GRANTEE fails to meet these deadlines and/or expectations, the STATE may declare the GRANTEE in default of this Agreement in accordance with the provisions of paragraph 22 of Attachment A.

10. **RENEWAL**: GRANTEE agrees that the STATE shall unilaterally have the right to determine the basis upon which this Agreement may be renewed and shall have the right to not renew this Agreement with or without cause.

11. **CHANGES IN PROJECT BUDGET AND DESIGN**: The GRANTEE agrees to notify the STATE and receive STATE'S written approval, as an Amendment to this Agreement, prior to implementing any change in program budget and design (as specified in Attachments C and D). Approval for such changes may be made directly by the STATE or involve action by the CDBG Advisory Committee.

    GRANTEE agrees to return (de-obligate) any funds that are unused by the project per Attachment D at the time of project completion.

12. **MULTI-YEAR FUNDING**: GRANTEE understands and agrees that the STATE will not be held liable for funding successive phases of a particular project and understands and agrees that CDBG funds are always given for one phase only at any given time.

13. **RELATED PARTIES**: The GRANTEE shall not make payments for goods, services, facilities, salary/wages, professional fees, leases, etc. to related parties for Agreement expenses without the prior written consent of STATE. Disbursements by the GRANTEE to related parties made without such prior approval may be disallowed and may result in an overpayment assessment.

14. **LABOR STANDARDS COMPLIANCE**: The GRANTEE agrees to abide by provisions of: (1) the Davis-Bacon Act and shall compile evidence certifying that all laborers and mechanics employed by the GRANTEE'S contractors on construction work assisted under this Agreement are paid wages at rates not less than those prevailing on similar construction in the locality as determined by the U.S. Department of Labor; (2) the Copeland "Anti-Kickback" Act requiring weekly payment of employees and weekly submission of payroll records by the GRANTEE'S contractors to the contracting agency; and (3) the Contract Work Hours and Safety Standard ACT (CSHSSA) requiring that workers receive "overtime" compensation at a rate of 1 ½ times their regular hourly wage after having worked more than 40 hours in one week, or overtime after more than 8 hours per day if mandated by the laws of the State of Nevada, and other Federal and State statutory provisions as enacted and codified, for the purpose of complying with labor standards compliance.

15. **SECTION 3 COMPLIANCE**: The GRANTEE agrees to abide by the provisions of Section 3 of the Housing and Urban Development Act of 1968, if the minimum threshold is met, to ensure that employment and other economic opportunities generated by the Community Development Block Grant program, to the greatest extent feasible, and consistent with existing Federal, State and local laws and regulations, be directed to low and very low income persons (24 CFR Part 75).

16. **ENVIRONMENTAL REVIEW COMPLIANCE**: The GRANTEE agrees to abide by provisions of the National Environmental Policy Act of 1969 (NEPA) and other provisions of law which further the purposes of such Act as required by Title 1 of the Housing and Community Development Act of 1974 as amended from time to time and in compliance with the Environmental Review Procedures of the Community Development Block Grant Program at 24 CFR Part 58 and any subsequent regulations issued by the U.S. Department of Housing and Urban Development implementing the Housing and Community Development Amendments of 1981.

17. **LEAD BASED PAINT**: The GRANTEE agrees to abide by provisions of 24 CFR Part 35 Lead Based Paint Poisoning Prevention in Certain Residential Structures, and the Residential Lead-Based Paint Hazard Reduction Act of 1992 as amended through 2005. GRANTEE also agrees to abide by the provisions of 40 CFR Part 745.65 – Lead-based Paint Hazards and EPA's Renovation Repair & Painting (RRP) Rule effective April 22, 2010.

18. **PAYMENTS UNDER THIS AGREEMENT** are conditioned upon the GRANTEE'S:

    a) Submission of an appropriate environmental review that demonstrates the required compliance with the National Environmental Policy Act (NEPA) prior to any obligation or commitment of funds (see CDBG Administration Manual);

b) Submission of acceptable documentation confirming procurement and labor compliance procedures have been followed;

c) Submission of Draw Requests that are complete and supported by appropriate invoices, payment information, etc.; and

d) Submission of all the necessary and prescribed project closing information.

19. **CONTINUING RESOLUTIONS**: In the event that funding for this program is provided through Federal Continuing Resolution, the STATE shall be responsible to expend only those funds actually provided to the STATE by Continuing Resolution and is under no further obligation to GRANTEE or any sub-contracted entity to fulfill the financial obligation until such time as additional funding is provided by a grant appropriation or continuing resolution. The STATE may determine the method for distributing and expending funds provided by Federal Continuing Resolution.

20. **SUBCONTRACTS**: Subcontract arrangements must be executed in writing and be approved in writing in advance by the STATE. The provisions of this Agreement will be made binding on a sub-grantee or contractor of the GRANTEE. The GRANTEE is responsible for managing the operations of any subcontracted activities. The GRANTEE must monitor subcontracted activities to ensure compliance with the provisions of the subcontract agreement and with this Agreement, as well as with applicable Federal and State requirements and performance objectives.

ATTACHMENT C – SCOPE OF WORK

Final Scope of Work/Project Description as agreed by the CDBG Advisory Committee. The Scope of Work should describe in quantifiable terms the proposed project, including established deadlines and expectations which will be used for the Environmental Review and for monitoring project progress.

The project is the construction of the new West Wendover Fire Station with the following elements:
Office Area and General Operations: 2,022 square feet
Apparatus Bays and Support Area: 9,361 square feet

Total Facility: 11,383 square feet

Additionally, the facility is designed to accommodate future expansion as needs develop including expansion to office areas, training rooms, storage and living quarter components. The city anticipates this new facility will eventually be staffed on a full-time 24-hour basis.

CDBG funds shall be used under the "construction" portion of the project. Design has already commenced as the project is funded under a USDA Rural Development long-term loan as well as direct cash contribution by the city. Additionally, the city is in process of submitting a gap financing application with the Nevada State Infrastructure Bank to ensure financial provisions are in place to account for instability and variations with regard to cost fluctuations which continue to persist in the materials and construction sectors of the economy since the Pandemic.

Milestones: Attached with this application is the Phase 1A deliverables (30% design) completed by the Design/Build Team (CORE/TSK). Phase 1A deliverables were accepted and approved by the city and USDA in January 2023. The Design/Build Team was selected under a USDA approved RFQ/RFP process in early 2022, that selection process is also attached.

The Phase 1A deliverables include the current schedule under Section 8. That schedule estimates onsite construction to begin the fall of 2023.

Subsequently the city with USDA concurrence has approved the Design/Build Team to proceed with Phase 1B which will result in the design reaching the Guaranteed Maximum Price (GMP) level (approximately 80%) under the design/build contract. Phase 1B is scheduled to be completed by June 2023. At that time, the city and USDA will review the Phase 1B deliverables and proceed with the final design segment followed by construction.

ATTACHMENT D – IMPLEMENTATION SCHEDULE

TASK	Est. Timeline July 1- June 30th or December 31st
PROJECT START UP:	
File Set Up	July 2023
Environmental Review	July 2023
Notice to Proceed	August 15, 2023
PROCUREMENT OF PROFESSIONAL ASSISTANCE (including professional engineers, architects, community development consultants, etc.)	
Construction Documents	July 30, 2023
Completion of Plan Check	September 15, 2023
Contractor NTP	September 15, 2023
PROJECT IMPLEMENTATION:	
Offsite Construction	October 1, 2023
Rough Site Construction	October 1, 2023
Building Construction	October 15, 2023
Structure Complete	March 15, 2024
Enclosure Complete	May 15, 2024
Interior Complete	November 15, 2024
Building System Complete	November 15, 2024
PROJECT CLOSEOUT:	
Close Out Documents to CDBG	June 2025

ATTACHMENT E – BUDGET

Final budget as agreed by the CDBG Advisory Committee in the format used in the CDBG Application Form.

Cost Category	CDBG	Local		State	Other Federal	Other	Totals
		Cash	In-Kind				
Land/Rights of Way					$ 840,000.00		$ 840,000.00
Preliminary Design					$ 75,000.00		$ 75,000.00
Design Architectural Fees					$ 786,679.00		$ 786,679.00
Construction	$ 500,000.00	$ 2,325,268.00			$ 7,152,854.00	$ 2,547,337.00	$ 12,525,459.00
Cost Interim Loan					$ 77,267.00		$ 77,267.00
Bond Counsel					$ 75,000.00		$ 75,000.00
Interest					$ 100,000.00		$ 100,000.00
Contingencies						$ 294,417.00	$ 294,417.00
							$ -
Total Costs	$ 500,000.00	$ 2,325,268.00	$ -	$ -	$ 9,106,800.00	$ 2,841,754.00	$ 14,773,822.00

ATTACHMENT F – FEDERAL ASSURANCES/CERTIFICATIONS

In order to meet the specific requirements of the Housing and Urban-Rural Recovery Act of 1983 which amends the Housing and Community Development Act of 1974, the following certifications must be completed by every Grantee.

1. ACQUISITION, RELOCATION AND ANTIDISPLACEMENT

I certify that all real property acquired and all displacements of persons resulting from the proposed CDBG project will be carried out under the provisions of the Uniform Relocation Assistance and Real Properties Acquisition Policies Act of 1970 as amended by the Uniform Relocation Act Amendments of 1987 Title IV of the Surface Transportation and Uniform Relocation Assistance Act of 1987. I further certify that all displacements of persons resulting from the proposed CDBG project will be carried out in accordance with Section 104(d) of the Housing and Community Development Act of 1974, as amended and in conformance with the Residential Anti-displacement and Relocation Assistance Plan and Certification.

2. CIVIL RIGHTS and FAIR HOUSING

I certify that the CDBG grant will be conducted and administered in accordance with Title VI of the Civil Rights Act of 1964 (42 USC 2000d), the Fair Housing Act (42USC 3601-3619), and implementing regulations and that the GRANTEE will affirmatively further fair housing choice.

3. ARCHITECTURAL BARRIERS

I certify that the CDBG program will be conducted in accordance with Architectural Barriers Act of 1968, as amended (42 USC 4151) and Section 504 of the Rehabilitation Act of 1973, as amended (28 USC 792), and the Americans with Disabilities Act of 1991.

4. CITIZEN PARTICIPATION

I certify that I will comply with the STATE Citizen Participation Plan as adopted by GOED: Rural Community and Development/CDBG Division. I certify that opportunities have been provided for citizen participation, hearings, and access to information comparable to the requirements of Title I HCD Act 104(a) (2). Specific information regarding the CDBG GRANTEE requirement (publications, notices) can be found in the GRANTEE'S application file.

5. PROGRAM COSTS RECOVERY

I certify that as a CDBG GRANTEE I will not attempt to recover the costs of any public improvements assisted in whole or in part with CDBG funds by assessing properties owned and occupied by low and moderate income persons unless: (1) CDBG funds are used to pay the proportion of such assessment that relates to non-CDBG funding, or (2) for the purposes of assessing properties owned and occupied by low and moderate income persons who are not very low income that the local government does not have sufficient CDBG funds to comply with the provision of (1) above.

6. EXCESSIVE FORCE CERTIFICATION

I certify that as a CDBG GRANTEE I will adopt and enforce a policy prohibiting the use of excessive force by law enforcement agencies within my jurisdiction against any individuals engaged in nonviolent civil rights demonstrations in accordance with the Armstrong/Walker "Excessive Force" Amendment Section 519 of the Department of Veteran Affairs Public Law 101-144 and Housing & Urban Development & Independent Agencies Appropriations Act of 1990. I will also adopt a policy enforcing applicable State and local laws against physically barring entrance to or exit from a facility or location which is the subject of such non-violent civil rights demonstrations within our jurisdiction.

7. PROHIBITION AGAINST LOBBYING CERTIFICATION

I certify that:

(1) No Federally appropriated funds will be paid, by or on behalf of the undersigned, to any person for the influencing or attempting to influence an officer or employee of any agency, a Member of Congress, an officer or employee of Congress, or an employee of a Member of Congress in connection with the awarding of any Federal contract, the making of any Federal Grant, the making of any Federal loan, extension, continuation, renewal, amendment, or modification of any Federal contract, grant, loan, or cooperative agreement.

(2) If any funds other than Federally appropriated funds are paid or will be paid to any person for influencing or attempting to influence an officer or employee of any agency, a Member of Congress, an officer or employee of Congress, or an employee of a Member of Congress in connection with this Federal contract, grant, loan, or cooperative agreement, the undersigned shall complete and submit Standard Form-LLL, "Disclosure Form to Report Lobbying," in accordance with its instructions.

(3) I certify that I shall require that the language of this certification be included in the award documents for all sub-awards at all tiers (including subcontracts, sub-grants, and contracts under grants, loans, and cooperative agreements) and that all sub-recipients shall certify and disclose accordingly.

This certification is a material representation of fact upon which reliance was placed when this transaction was made or entered into. Submission of this certification is a prerequisite for making or entering into this transaction imposed by section 1352, title 31, U.S. Code. Any person who fails to file the required certification shall be subject to a civil penalty of not less than $10,000 and not more than $100,000 for each failure.

8. SECTION 3

I certify that the jurisdiction will comply with Section 3 of the Housing and Urban Development Act of 1968 (12 U.S.C. 1701u), and implementing regulations at 24 CFR Part 75 if the minimum thresholds for Section 3 covered housing and community development assistance are met.

9. STATEMENT OF ASSURANCES

I certify that, in addition to laws, regulations, and Executive Orders noted in this document, the jurisdiction will comply with the following Federal and State regulations:

Federal:

1. Title I of the Housing & Community Development Act of 1974 as amended
2. Federal Fair Labor Standards Act
3. Title VI of the Civil Rights Act of 1964 - Nondiscrimination
4. Title VIII of the Civil Rights Act of 1968 - Nondiscrimination in Housing
5. Age Discrimination Act of 1975
6. Executive Order 12259 - Leadership & Coordination of Fair Housing
7. Section 109, Housing & Community Development Act of 1974 - Nondiscrimination
8. Section 504 of Rehabilitation Act of 1973, as amended
9. Executive Order 11063 - Equal Opportunity in Housing
10. Executive Order 11246 - Nondiscrimination
11. Hatch Act
12. Treasury Circular 1075 regarding drawdown of CDBG funds
13. Single Audit Act of 1984, which has legal precedence over the Uniform Guidance.
14. Section 109 of Public Law 100-202, which restricts awarding contracts for work on public buildings or public works to contractors or subcontractors from foreign countries that deny fair trade practices.

State:

1. NRS 338.010 - 338.130 - Public Works Projects.
2. NRS 613.330 - Equal Employment Opportunity.
3. NRS 118.100 - Equal Housing Opportunity.
4. NRS 332.005 - 332.225 - Local Government Purchasing Act.

10. CHANGE OF USE

I certify that the jurisdiction will comply with all requirements of 24 CFR Part 24. This includes sections 488 and 489 J requiring all assisted housing units maintain affordability standards until 5 years following the date of closeout of this contract by the STATE.

I certify that I have read, am aware of and will comply with all of the forgoing Certification requirements.

By: _____
Signature of Elected Official

Jasie Holm
Printed Name of Elected Official

Mayor
Title

_____
Date

CITY OF WEST WENDOVER
1111 N. Gene L. Jones Way • P.O. Box 2825 • West Wendover, NV 89883
Office (775) 664-3081 • Fax (775) 664-3720

CDBG CERTIFICATION LETTER

Grantee: City of West Wendover

Grant Number(s):

23/PF/04 Fire Station EOC

AUTHORIZED SIGNATURES

Signature of Authorized Official

Signature of Authorized Official

This is to certify that the above are the signatures of

Chris J. Melville, City Manager

(Name and Title)

(Name and Title)

and that they are authorized to sign the request for funds and financial status reports.

Signature of Mayor/Chairman

Mayor

Title

May 25, 2023

Date

EXHIBIT 3-04
Support Letter

CITY OF WEST WENDOVER

1111 N. Gene L. Jones Way ● P.O. Box 2825 ● West Wendover, NV 89883
Office (775) 664-3081 ● Fax (775) 664-3720

August 14, 2023

Erik Jimenez
Chief Policy Deputy
Nevada State Treasurer's Office
Nevada State Infrastructure Bank
101 N. Carson Street, Suite 4
Carson City, NV 89701

Subject:Support Letter City of West Wendover – West Wendover Fire Station/EOC Project

Dear Mr. Jimenez:

This letter is to document the City of West Wendover's general and financial support for the ***West Wendover Fire Station/EOC project***, which has been submitted under an application to the Nevada State Infrastructure Bank for gap financing.

The project entails the construction of the new West Wendover Fire Station Emergency Operations Center which will be located adjacent and west of the West Wendover City Hall on property under ownership of the City of West Wendover. The facility includes design and operational features for the incorporation of the city's emergency operation center functions.

This project has been a continuing priority for the city and is included in the most recent City of West Wendover Capital Improvement Plan (CIP) for 2022 as No. 2. Additionally, the project has been supported for many years as part of the City's Civic Center Downtown Area development under the original 2021 Master Plan which included the facility along with the West Wendover City Hall that was completed in 2009.

Lastly, this project is also supported by several State and Federal Agencies through provisions of funding and is supported by the Nevada Division of Emergency Management which has provided a separate general letter of support.

In addition to the general support and planning for the project, the city has committed a ***cash contribution of $2,325,268*** towards the project. This is documented under Exhibit 2A of the noted application.

If you have any questions, please do not hesitate to let me know.

Chris J. Melville, C.P.O.
City Manager

Nevada Division of Emergency Management / Homeland Security
Prevent • Protect • Mitigate • Respond • Recover

March 10, 2023

The Honorable Catherine Cortez Masto
United States Senate
313 Hart Senate Office Building
Washington, D.C. 20510

The Honorable Mark Amodei
U.S. House of Representatives
104 Cannon House Office Building
Washington, D.C. 20515

The Honorable Jacky Rosen
United States Senate
713 Hart Senate Office Building
Washington, D.C. 20510

Dear Senator Cortez Masto, Senator Rosen, and Congressman Amodei,

I am writing to support the City of West Wendover funding request build a new fire station which would double as the city's emergency operations center. This city is at the border of Utah and Nevada, along Interstate 80, and a major rail transportation corridor. Their nearest assistance is easily two-hours away.

West Wendover faces several natural hazards: earthquake, wildland fire, flood, and the pandemic. As we move forward into future threats of cyber-security, the importance of up-to-date technology is even more important.

Nevada is blessed to receive Emergency Management Program and Homeland Security Program grants funding streams. These grants maintain and occasionally start new programs for our local jurisdictions as well as state functions that benefit each of our local jurisdictions. The problem is these funds do not lend themselves to funding a single jurisdiction's emergency operation center without taking away from an existing essential program. It is for this reason I support their ask to you for financial assistance. This will enable us to continue to meet the needs of all jurisdictions and improve West Wendover's standing.

In 2011, Department of Homeland Security provided a competitive grant program for such requests. It was lightly funded at $14.1 million dollars. I say lightly funded as consideration of construction costs for a new building can easily limit this grant to servicing only one or two municipalities nationally. Since then, these funds have been rolled into the Emergency Management Performance Grant. Given the task of updating an emergency operations center while also providing the functions of emergency management and homeland security, it is easy

to see why West Wendover is asking for assistance. I reviewed the notice of funding opportunity for the 2011 EOC grant and find that West Wendover's ask meets the intent of that guidance.

Nevada has been on a resilience theme for a number of years: we desire to build a system that will enable us to reduce the impact of emergencies to our communities. West Wendover refreshing their emergency operations center will assist with improving our resilience. I would be remiss as Nevada's Emergency Manager and Homeland Security Chief to not take this time to also remind you and your staff to prepare for an emergency: at work and at home. Visit dem.nv.gov to ensure you are ready for what can occur in our Silver State.

I appreciate your consideration of West Wendover's request. Should you have any questions, please feel free to contact me at (775) 687-0300 or dfogerson@dem.nv.gov

Respectfully,

David Wm. Fogerson

EXHIBIT 4
Property Ownership

DOC # 002696
3/11/2022 5:02 PM
Official Record
Requested By GOICOECHEA & DIGRAZIA
Elko County - NV
D. Mike Smales - Recorder
Pg 1 of 3 Fee: $37.00
Recorded By: STUTTLE

N-97447

The United States of A...

To all to whom these presents shall come, Greeting:

WHEREAS

CITY OF WEST WENDOVER

is entitled to a land patent pursuant to Section 203 of the Act of October 21, 1976 (43 U.S.C. 1713), as amended, for the following described land:

Mount Diablo Meridian, Nevada

T. 33 N., R. 70 E.,
sec. 8, lot 10;
sec. 9, SW1/4SW1/4;
sec. 16, lot 17.

The area described contains 84.06 acres.

NOW KNOW YE, that there is, therefore, granted by the UNITED STATES OF AMERICA, unto CITY OF WEST WENDOVER the land described above; TO HAVE AND TO HOLD the said land with all the rights, privileges, immunities, and appurtenances, of whatsoever nature, thereunto belonging, unto CITY OF WEST WENDOVER, its successors and assigns, forever.

EXCEPTING AND RESERVING TO THE UNITED STATES:

1. A right-of-way thereon for ditches and canals constructed by the authority of the United States, Act of August 30, 1890 (43 U.S.C. 945); and

2. All mineral deposits in the land so patented, and to it, or persons authorized by it, the right to prospect for, mine, and remove the minerals under applicable law and such regulations as the Secretary of the Interior may prescribe.

Patent Number 27-2022-0003

3. A right-of-way reservation Nev-65585 for road purposes, granted to the Nevada Department of Transportation, pursuant to the Act of August 27, 1959 (Federal Aid Highway) (72 Stat 2776; 43 U.S.C. 1761).

SUBJECT TO:

1. Valid existing rights;

2. Right-of-way NVE-001655 for buried telephone line purposes granted to Beehive Telephone Company, its successors or assigns, by right, pursuant to the Act of October 21, 1976 (43 U.S.C. 1761);

3. Right-of-way N-20138 for water line purposes granted to the City of West Wendover, its successors or assigns, by right, pursuant to the Act of October 21, 1976 (43 U.S.C. 1761);

4. Right-of-way N-36680 for water line purposes granted to the City of West Wendover, its successors or assigns, by right, pursuant to the Act of October 21, 1976 (43 U.S.C. 1761);

5. Right-of-way N-39088 for overhead transmission line purposes granted to Wells Rural Electric Co., its successors or assigns, by right, pursuant to the Act of October 21, 1976 (43 U.S.C. 1761);

6. Right-of-way N-41029 for access road purposes granted to the City of West Wendover, its successors or assigns, by right, pursuant to the Act of October 21, 1976 (43 U.S.C. 1761);

7. Right-of-way N-57738 for road purposes (Wendover Blvd) granted to the City of West Wendover, its successors or assigns, by right, pursuant to the Act of October 21, 1976 (43 U.S.C. 1761);

8. Right-of-way N-61476 for access road purposes granted to the City of West Wendover, its successors or assigns, by right, pursuant to the Act of October 21, 1976 (43 U.S.C. 1761); and

9. Right-of-way N-97726 for overhead power and distribution line purposes granted to Wells Rural Electric Co., its successors or assigns, by right, pursuant to the Act of October 21, 1976 (43 U.S.C. 1761).

By accepting this patent, the patentee agrees to indemnify, defend and hold the United States harmless from any costs, damages, claims, causes of action, penalties, fines, liabilities, and judgments of any kind or nature arising from the past, present, and future acts or omissions of the

Patent Number 27-2022-0003

patentee, its employees, agents, contractors, or lessees, or any third-party, arising out of, or in connection with, the patentee's use, occupancy, or operations on the patented real property. This indemnification and hold harmless agreement includes, but is not limited to, acts and omissions of the patentee, its employees, agents, contractors, or lessees, or third party arising out of or in connection with the uses and/or occupancy of the patented real property resulting in: (1) Violations of federal, state, and local laws and regulations applicable to the real property; (2) Judgments, claims or demands of any kind assessed against the United States; (3) Costs, expenses, damages of any kind incurred by the United States; (4) Other releases or threatened releases on, into or under land, property and other interests of the United States by solid or hazardous waste(s) and/or hazardous substances(s), as defined by federal or state environmental laws; (5) Other activities by which solid or hazardous substances or wastes, as defined by federal and state environmental laws were generated, released, stored, used or otherwise disposed of on the patented real property, and any cleanup response, remedial action, or other actions related in any manner to said solid or hazardous substances or wastes; (6) Or natural resource damages as defined by federal and state law. This covenant shall be construed as running with the patented real property, and may be enforced by the United States in a court of competent jurisdiction; and

PURSUANT to the requirements established by section 120(h) of the Comprehensive Environmental Response, Compensation and Liability Act, 42 U.S.C. 9620(h), as amended by the Superfund Amendments and Reauthorization Act of 1988, (100 Stat. 1670), notice is hereby given that the above-described lands have been examined and no evidence was found to indicate that any hazardous substances have been stored for one year or more, nor had any hazardous substances been disposed of or released on the subject property.

[SEAL]

IN TESTIMONY WHEREOF, the undersigned authorized officer of the Bureau of Land Management, in accordance with the provisions of the Act of June 17, 1948 (62 Stat. 476), has, in the name of the United States, caused these letters to be made Patent, and the Seal of the Bureau to be hereunto affixed.

GIVEN under my hand, in RENO, NEVADA, the TWENTY-FOURTH day of FEBRUARY in the year of our Lord TWO THOUSAND and TWENTY-TWO and of the Independence of the United States the Two Hundred and Forty-Sixth.

By _____
Alan B. Shepherd
Deputy State Director

Patent Number 27-2022-0003

849855

PURCHASER'S COPY OF CASHIER'S CHECK

NEVADA STATE BANK

94-77/1224

CITY OF WEST WENDOVER

Remitter

Date JUL 12, 2021

Pay $ ***168,000.00***

ONE HUNDRED SIXTY EIGHT THOUSAND and 00/100 US Dollars

To
The Order
Of ***USDI, BUREAU OF LAND MANAGEMENT***

NOTICE TO CUSTOMER: The purchase of a Surety Bond and/or execution of an Indemnity Agreement may be required before the check may be replaced or refunded in the event it is lost, misplaced or stolen.

NON NEGOTIABLE
CUSTOMER COPY

052 01 8056

HARLAND CLARKE MI7945 80061226

THIS DOCUMENT CONTAINS A TRUE WATERMARK - HOLD TO LIGHT TO VIEW

NEVADA STATE BANK

CASHIER'S CHECK

94-77/1224 849855

CITY OF WEST WENDOVER

Remitter

Date JUL 12, 2021

Pay $ ***168,000.00***

ONE HUNDRED SIXTY EIGHT THOUSAND and 00/100 US Dollars

To
The Order
Of ***USDI, BUREAU OF LAND MANAGEMENT***

Authorized Signature

MP

052 01 8056

PUSH HERE

Details on Back

Security Features Included

⑈849855⑈ ⑆122400779⑆06120389227⑈

United States Department of the Interior
Bureau of Land Management
ELKO DISTRICT OFFICE
3900 EAST IDAHO STREET
ELKO, NV 89801
Phone: (775) 753-0200

Receipt

No: 4927861

Transaction #: 5060643
Date of Transaction: 07/21/2021

CUSTOMER:

CITY OF WEST WENDOVER
PO BOX 2825
WEST WENDOVER,NV 89883-2825 US

LINE #	QTY	DESCRIPTION	REMARKS	UNIT PRICE	TOTAL
1	1.00	LANDS & REALTY MANAGEMENT / FED LAND TRANS. FACILITATION ACT / PMNT FROM DIRECT SALES ON PD LANDS **CASES:** NVN 097447/$168000.00 **PROJECT:** LUGD32007270		- n/a -	168000.00
				TOTAL:	**$168,000.00**

PAYMENT INFORMATION

1	AMOUNT:	168000.00	POSTMARKED:	N/A
	TYPE:	CHECK	RECEIVED:	07/21/2021
	CHECK NO:	849855		
	NAME:	CITY OF WEST WENDOVER PO BOX 2825 WEST WENDOVER NV 89883-2825 US		

REMARKS

This receipt was generated by the automated BLM Collections and Billing System and is a paper representation of a portion of the official electronic record contained therein.

849927

PURCHASER'S COPY OF CASHIER'S CHECK

NEVADA STATE BANK

94-77/1224

CITY OF WEST WENDOVER
Remitter

Date
JAN 05, 2022

Pay

$ ***672,000.00***

SIX HUNDRED SEVENTY TWO THOUSAND and 00/100 US Dollars

To
The Order
Of
USDI, BUREAU OF LAND MANAGEMENT

NOTICE TO CUSTOMER: The purchase of a Surety Bond and/or execution of an Indemnity Agreement may be required before the check may be replaced or refunded in the event it is lost, misplaced or stolen.

NON NEGOTIABLE
CUSTOMER COPY

052 01 4038

HARLAND CLARKE M17945 80061226

THIS DOCUMENT CONTAINS A TRUE WATERMARK - HOLD TO LIGHT TO VIEW

NEVADA STATE BANK

CASHIER'S CHECK

94-77/1224 849927

Details on Back.

Security Features Included.

CITY OF WEST WENDOVER
Remitter

Date
JAN 05, 2022

Pay

$ ***672,000.00***

SIX HUNDRED SEVENTY TWO THOUSAND and 00/100 US Dollars

To
The Order
Of
USDI, BUREAU OF LAND MANAGEMENT

Authorized Signature

RUB HERE STOP LOOK RUB HERE

052 01 4038

⑈849927⑈ ⑆122400779⑆06120389 27⑈

United States Department of the Interior
Bureau of Land Management
ELKO DISTRICT OFFICE
3900 EAST IDAHO STREET
ELKO, NV 89801
Phone: (775) 753-0200

Receipt

No: 5003682

Transaction #: 5139227
Date of Transaction: 01/06/2022

CUSTOMER:

CITY OF WEST WENDOVER
PO BOX 2825
WEST WENDOVER,NV 89883-2825 US

LINE #	QTY	DESCRIPTION	REMARKS	UNIT PRICE	TOTAL
1	1.00	LANDS & REALTY MANAGEMENT / FED LAND TRANS. FACILITATION ACT / PMNT FROM DIRECT SALES ON PD LANDS **CASES:** NVN 097447/$672000.00 **PROJECT:** LUGD32007270		- n/a -	672000.00
				TOTAL:	**$672,000.00**

PAYMENT INFORMATION

1	AMOUNT:	672000.00	POSTMARKED:	N/A
	TYPE:	CHECK	RECEIVED:	01/06/2022
	CHECK NO:	849927		
	NAME:	CITY OF WEST WENDOVER PO BOX 2825 WEST WENDOVER NV 89883-2825 US		

REMARKS

This receipt was generated by the automated BLM Collections and Billing System and is a paper representation of a portion of the official electronic record contained therein.

EXHIBIT 5
Current Project Schedule
A part of Phase 1B Deliverables
8-7-2023

CORE

WEST WENDOVER FIRE STATION - Full Schedule

ID	Task Name	Duration	Start	Finish
1	**WEST WENDOVER FIRE STATION**	**859 days**	**Wed 10/20/21**	**Mon 3/10/25**
2	**Preconstruction Phase**	**594 days**	**Wed 10/20/21**	**Thu 2/22/24**
3	**Project Award**	**141 days**	**Wed 10/20/21**	**Tue 5/10/22**
4	City Council Approval / Notice of Award	10 days	Wed 10/20/21	Tue 11/2/21
5	Reciept of Executed Contract	130 days	Wed 11/3/21	Mon 5/9/22
6	Reciept of Notice to Proceed	1 day	Tue 5/10/22	Tue 5/10/22
7	**Programming Phase**	**83 days**	**Wed 5/25/22**	**Wed 9/21/22**
8	OAC Mtg - Kick Off	1 day	Wed 5/25/22	Wed 5/25/22
9	Programming Questionaire	6 days	Tue 5/31/22	Tue 6/7/22
10	OAC Mtg - Programming Questionaire Rev	1 day	Wed 6/8/22	Wed 6/8/22
11	Programming /Adjacency Diagram Develo	53 days	Thu 6/9/22	Tue 8/23/22
12	OAC Mtg - Programming/Adj Diagram Pres	1 day	Wed 8/24/22	Wed 8/24/22
13	CWW Adjacency Diagram Rvw/Comment	19 days	Thu 8/25/22	Wed 9/21/22
14	*OAC Mtg - CWW Comment Review/Approv*	*0 days*	*Wed 9/21/22*	*Wed 9/21/22*
15	**Schematic Design Phase (Phase 1A)**	**110 days**	**Thu 9/22/22**	**Tue 2/28/23**
16	SD Development/Incorp Rvw Comments	10 days	Thu 9/22/22	Wed 10/5/22
17	OAC Mtg - Schematic Design Status Review	1 day	Thu 10/6/22	Thu 10/6/22
18	Schematic Design Development	10 days	Fri 10/7/22	Thu 10/20/22
19	OAC Mtg - Schematic Design Status Review	1 day	Fri 10/21/22	Fri 10/21/22
20	Schematic Design Development	5 days	Mon 10/24/22	Fri 10/28/22
21	Submit SD Progress Set to CORE for Pricing	1 day	Mon 10/31/22	Mon 10/31/22
22	Schematic Design Development Continued	5 days	Mon 10/31/22	Fri 11/4/22
23	OAC Mtg - Schematic Design Status	1 day	Mon 11/7/22	Mon 11/7/22
24	Schematic Design Development	10 days	Tue 11/8/22	Mon 11/21/22
25	CORE Prelim SD Pricing w/Trade Partners	15 days	Tue 11/1/22	Mon 11/21/22
26	OAC Mtg - SD Estimate Presentation	1 day	Tue 11/22/22	Tue 11/22/22
27	CWW - SD Submittal Review	51 days	Wed 11/23/22	Tue 2/7/23
28	USDA - SD Submittal Review	51 days	Wed 11/23/22	Tue 2/7/23
29	OAC Mtg - CWW/USDA SD Approval	1 day	Tue 2/28/23	Tue 2/28/23
30	**Design Development Phase (Phase 1B)**	**162 days**	**Tue 2/28/23**	**Mon 10/16/23**
31	*Receive NTP for Phase 1B Services*	*0 days*	*Tue 2/28/23*	*Tue 2/28/23*
32	*Prepare/Receive Ph 1B Contract Amendme*	*0 days*	*Tue 2/28/23*	*Tue 2/28/23*
33	*OAC Mtg - Phase 1B Kick Off Mtg*	*0 days*	*Mon 3/6/23*	*Mon 3/6/23*
34	Design Development	21 days	Tue 3/7/23	Tue 4/4/23
35	OAC Mtg - Design Development Review	1 day	Wed 4/5/23	Wed 4/5/23
36	Design Development Cont.	19 days	Thu 4/6/23	Tue 5/2/23
37	OAC Mtg. Review DD progress	1 day	Wed 4/19/23	Wed 4/19/23

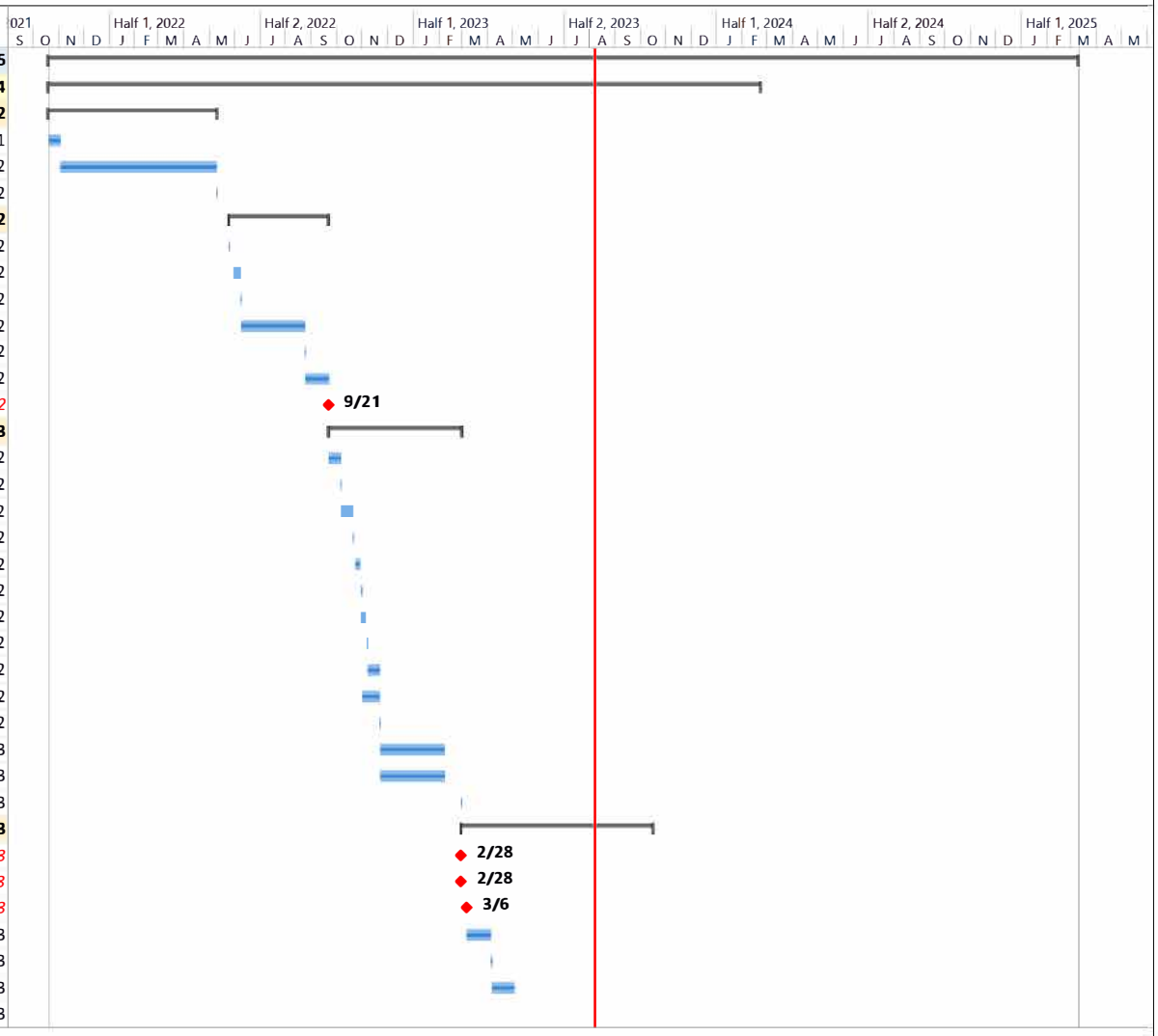

Task | Milestone | Summary | Project Summary | Deadline | Critical | Progress

VIEW 00 - OAC | Status Date: Mon 8/7/23 | Printed Date: Mon 8/7/23 | 1 of 3

WEST WENDOVER FIRE STATION - Full Schedule

ID	Task Name	Duration	Start	Finish
38	OAC Mtg - Design Development Presentati	1 day	Wed 5/3/23	Wed 5/3/23
39	PEMB Design	38 days	Thu 5/18/23	Wed 7/12/23
40	CWW Design Development Review	10 days	Thu 5/4/23	Wed 5/17/23
41	OAC Mtg - City Comment Review	1 day	Wed 5/17/23	Wed 5/17/23
42	**GMP Bidding, Review, and Proposal Subm**	**34 days**	**Thu 5/25/23**	**Thu 7/13/23**
43	Release RFP	1 day	Thu 5/25/23	Thu 5/25/23
44	Site Visit	1 day	Tue 6/6/23	Tue 6/6/23
45	RFIs Due	1 day	Fri 6/9/23	Fri 6/9/23
46	*Bids Due*	*0 days*	*Thu 6/22/23*	*Thu 6/22/23*
47	Descope Interview	5 days	Mon 6/26/23	Fri 6/30/23
48	Proposal Review & GMP Prep.	13 days	Mon 6/26/23	Thu 7/13/23
49	*Pre-GMP Review*	*0 days*	*Thu 7/13/23*	*Thu 7/13/23*
50	*OAC Mtg Phase 1B GMP Submittal*	*0 days*	*Fri 7/14/23*	*Fri 7/14/23*
51	CWW Initial Comments	7 days	Mon 7/17/23	Tue 7/25/23
52	Incorporate City Comments	8 days	Wed 7/26/23	Fri 8/4/23
53	*Re-submit Phase 1B Proposal*	*0 days*	*Mon 8/7/23*	*Mon 8/7/23*
54	CWW Phase 1B Submittal Review	50 days	Mon 8/7/23	Mon 10/16/23
55	USDA Phase 1B Submittal Review	50 days	Mon 8/7/23	Mon 10/16/23
56	*OAC Mtg - CWW/USDA Phase 1B Approval*	*0 days*	*Mon 10/16/23*	*Mon 10/16/23*
57	**Construction Document Phase (Phase 2 Fina**	**62 days**	**Mon 10/16/23**	**Tue 1/16/24**
58	*Receive NTP for Phase 2 Services*	*0 days*	*Mon 10/16/23*	*Mon 10/16/23*
59	Prep/Receive Ph2 Contract Amendment	30 days	Tue 10/17/23	Wed 11/29/23
60	OAC Mtg Phase 2 Kick-Off	1 day	Tue 10/17/23	Tue 10/17/23
61	OAC Mtg - Con Doc Status Review	1 day	Thu 11/30/23	Thu 11/30/23
62	100%CD Docs Development	35 days	Tue 10/17/23	Wed 12/6/23
63	OAC Mtg CD Package Presentation	1 day	Thu 12/7/23	Thu 12/7/23
64	CWW CD Review	10 days	Fri 12/8/23	Thu 12/21/23
65	OAC CWW CD Package Comment Review	1 day	Fri 12/22/23	Fri 12/22/23
66	Const Doc Adjustments	4 days	Tue 12/26/23	Fri 12/29/23
67	OAC Mtg - CD Pkg Presentation	1 day	Tue 1/2/24	Tue 1/2/24
68	CWW Review of CD Pkg	5 days	Wed 1/3/24	Tue 1/9/24
69	USDA Review of CD Package	10 days	Wed 1/3/24	Tue 1/16/24
70	*CWW USDA Construction Doc Approval*	*0 days*	*Tue 1/16/24*	*Tue 1/16/24*
71	**Plan Check Review Process**	**37 days**	**Wed 1/3/24**	**Thu 2/22/24**
72	Plan Check Review Submittal	1 day	Wed 1/3/24	Wed 1/3/24
73	Building Department Plan Check Review	15 days	Thu 1/4/24	Wed 1/24/24
74	Fire Marshall Review Process	15 days	Thu 1/4/24	Wed 1/24/24

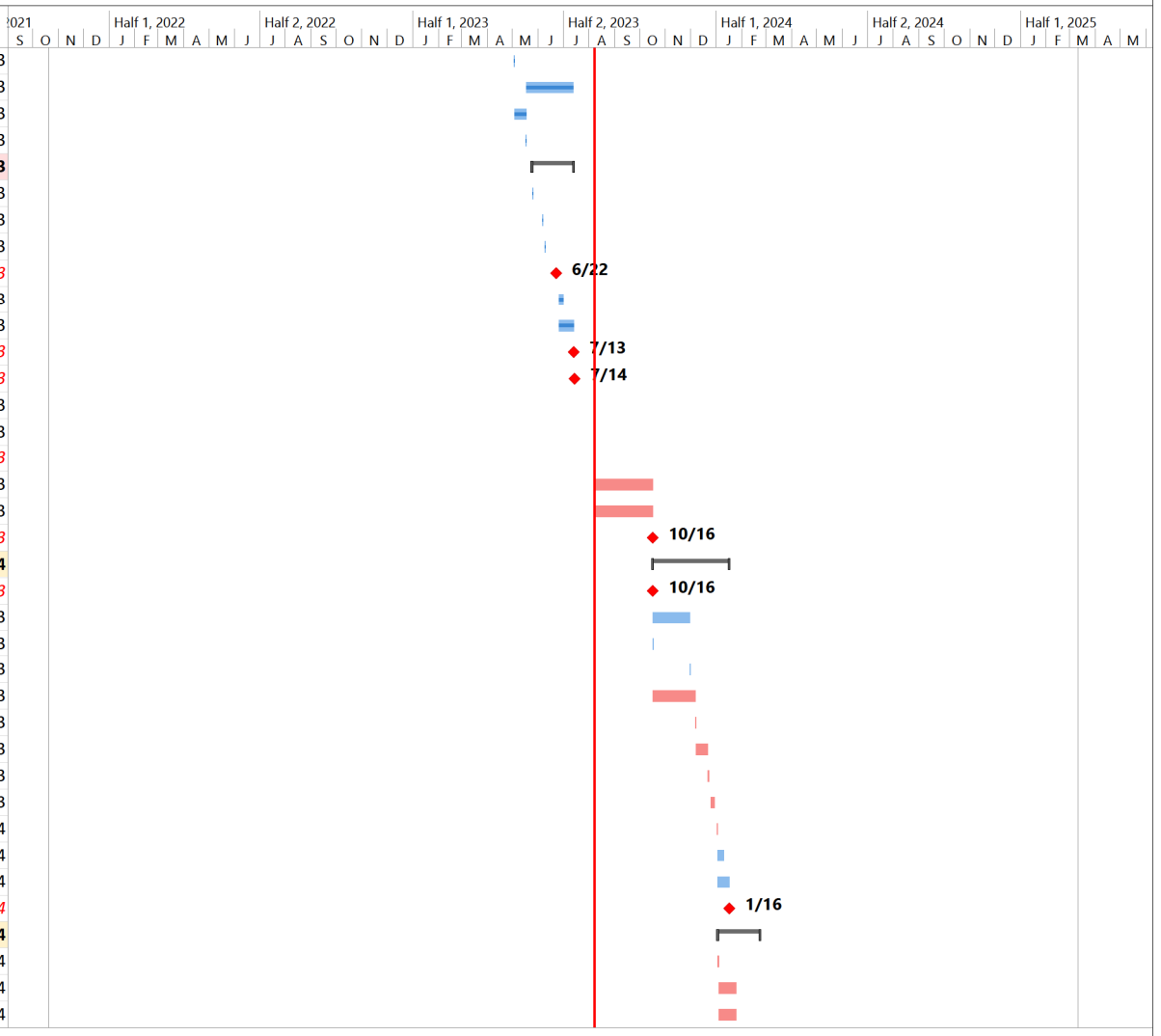

Task | Milestone | Summary | Project Summary | Deadline | Critical | Progress

VIEW 00 - OAC | Status Date: Mon 8/7/23 | Printed Date: Mon 8/7/23 | 2 of 3

WEST WENDOVER FIRE STATION - Full Schedule

ID	Task Name	Duration	Start	Finish
75	Receive Building Department Review Com	1 day	Thu 1/25/24	Thu 1/25/24
76	Receive Fire Marshall Review Comments	1 day	Thu 1/25/24	Thu 1/25/24
77	Address Plan Check Review Comments	10 days	Fri 1/26/24	Thu 2/8/24
78	Address Fire Marshall Review Comments	10 days	Fri 1/26/24	Thu 2/8/24
79	Review Comment Revision Approvals	10 days	Fri 2/9/24	Thu 2/22/24
80	*Plan Check Review Approval*	*0 days*	*Thu 2/22/24*	*Thu 2/22/24*
81	**Construction Phase**	**354 days**	**Mon 10/16/23**	**Mon 3/10/25**
82	**Administrative**	**119 days**	**Mon 10/16/23**	**Thu 4/4/24**
83	*Receive Admin NTP to Procure Materials*	*0 days*	*Mon 10/16/23*	*Mon 10/16/23*
84	Execute Subcontracts	5 days	Tue 10/17/23	Mon 10/23/23
85	Delay Start - Winter	25 days	Fri 2/23/24	Thu 3/28/24
86	*Begin Mobilization*	*0 days*	*Thu 3/28/24*	*Thu 3/28/24*
87	Mobilize Onsite	5 days	Fri 3/29/24	Thu 4/4/24
88	**Procurement**	**237 days**	**Tue 10/24/23**	**Fri 9/27/24**
89	**Procure Submittals**	**97 days**	**Tue 10/24/23**	**Tue 3/12/24**
109	**Procure Deferred Submittals**	**40 days**	**Wed 1/17/24**	**Tue 3/12/24**
113	**Submittal Review**	**112 days**	**Tue 10/31/23**	**Tue 4/9/24**
133	**Review Deferred Submittals**	**15 days**	**Wed 3/13/24**	**Tue 4/2/24**
137	**Procure Materials**	**222 days**	**Tue 11/14/23**	**Fri 9/27/24**
159	**Off-Site Construction**	**36 days**	**Fri 4/5/24**	**Fri 5/24/24**
165	**Rough Site Construction**	**92 days**	**Fri 4/5/24**	**Wed 8/14/24**
179	**Building Construction**	**203 days**	**Tue 4/23/24**	**Mon 2/10/25**
180	**Structure**	**121 days**	**Tue 4/23/24**	**Fri 10/11/24**
195	**Interior - Office**	**82 days**	**Fri 7/12/24**	**Tue 11/5/24**
214	**Enclosure - Office**	**30 days**	**Fri 7/19/24**	**Thu 8/29/24**
223	**Interior - App Bay**	**82 days**	**Mon 10/14/24**	**Mon 2/10/25**
242	**Building Systems**	**55 days**	**Mon 11/18/24**	**Thu 2/6/25**
251	**Finish Site Construction**	**60 days**	**Thu 8/15/24**	**Thu 11/7/24**
263	*Substantial Completion*	*0 days*	*Mon 2/10/25*	*Mon 2/10/25*
264	Complete Punch List	10 days	Tue 2/11/25	Mon 2/24/25
265	Contractual Close Out	20 days	Tue 2/11/25	Mon 3/10/25
266	*Final Completion*	*0 days*	*Mon 3/10/25*	*Mon 3/10/25*

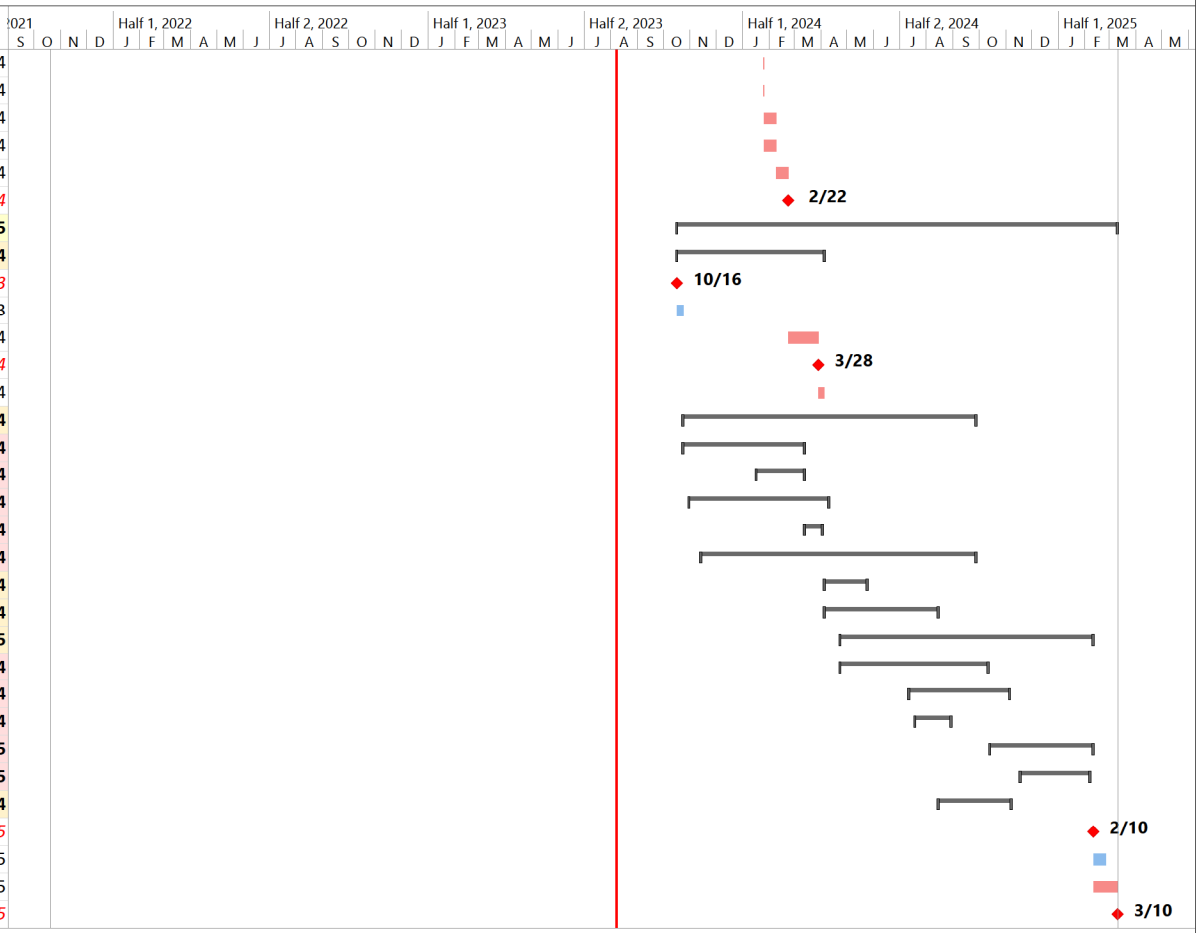

Task | Milestone | Summary | Project Summary | Deadline | Critical | Progress

VIEW 00 - OAC | Status Date: Mon 8/7/23 | Printed Date: Mon 8/7/23 | 3 of 3

August 7, 2023

EXHIBIT 5A
PHASE 1B Design Deliverables and GMP Completed 8-7-2023

West Wendover Fire Station No. 13

Guaranteed Maximum Price (GMP)

TABLE OF CONTENTS

1. GMP
2. Basis of GMP
3. Schedule
4. Design Documents

CORE



"Where the West Begins"!

1.
GMP

West Wendover
Fire Station 13

Guaranteed Maximum Price

Prepared on: 7-Aug-23

#	Description		GMP	BREAKOUTS Included in base Access Road	ALTERNATES NOT included ALT #1 Cross Street Visitor Parking
	GENERAL		**$402,036**	**$0**	**$6,595**
GEN1	General Requirements		**$136,878**	$0	$6,595
GEN2	Scaffolding & Equipment		**$129,454**	$0	$0
GEN3	Waste Management & Cleaning Requirements		**$135,704**	$0	$0
	DEMOLITION / OFF-SITE INFRASTRUCTURE		**$0**	**$0**	**$0**
	SITE WORK (ROUGH)		**$1,218,642**	**$74,497**	**$75,515**
7	Horizontal Survey & Staking		**$19,418**	$0	$3,884
8	Earthwork, Paving, & Utilities		**$1,199,224**	$74,497	$71,631
	SITE WORK (FINISH)		**$672,269**	**$35,605**	**$36,700**
16	Landscaping & Irrigation		**$121,208**	$0	$26,554
18	Flag Pole		**$6,600**	$0	$0
23	Gates		**$12,330**	$0	$0
24	Site Concrete		**$434,311**	$35,605	$10,146
25	Site Masonry		**$97,820**	$0	$0
	STRUCTURE		**$1,598,359**	**$0**	**$0**
27	Structural Layout & Coordination		**$11,538**	$0	$0
30	Structural Concrete		**$685,133**	$0	$0
33	PEMB Structure		**$462,471**	$0	$0
36	Rough Carpentry		**$439,217**	$0	$0
	ENCLOSURE		**$1,687,162**	**$0**	**$0**
38	Moisture Protection		**$161,730**	$0	$0
40	Caulking & Sealants		**$50,258**	$0	$0
44	Thermal Insulation		**$53,432**	$0	$0
46	PEMB Enclosure		**$693,706**	$0	$0
48	Stucco / EIFS		**$195,711**	$0	$0
52	Exterior Aluminum, Glass, & Glazing		**$76,150**	$0	$0
54	Special Doors		**$456,175**	$0	$0
	INTERIOR FINISHES		**$759,215**	**$0**	**$0**
55	Temporary Requirements for Phasing / Quality Control		**$34,614**	$0	$0
56	Doors, Frames, & Hardware		**$119,364**	$0	$0
59	Casework & Finished Carpentry		**$73,723**	$0	$0
60	Drywall		**$291,747**	$0	$0
61	Paint & High-Performance Coatings		**$91,911**	$0	$0
62	Acoustical Ceiling Treament		**$42,183**	$0	$0
65	Carpet & Resilient Flooring		**$15,865**	$0	$0
66	Fluid-Applied Flooring		**$34,950**	$0	$0
67	Concrete Finishing		**$44,358**	$0	$0
70	Progressive & Final Clean Requirements		**$10,500**	$0	$0
	SPECIALTIES		**$94,412**	**$0**	**$0**
72	Building Signage		**$30,800**	$0	$0
74	Building Specialties		**$63,612**	$0	$0
	EQUIPMENT		**$222,366**	**$0**	**$0**
86	Residential Equipment & Appliances		**$67,490**	$0	$0
89	Fire Station Equipment		**$154,876**	$0	$0
	MEP SYSTEMS		**$1,855,142**	**$0**	**$0**
97	Fire Suppression System		**$68,182**	$0	$0
98	Plumbing Systems		**$652,830**	$0	$0
100	HVAC & Controls Systems		**$382,691**	$0	$0
103	Electrical Systems		**$751,440**	$0	$0
	UNIQUE FEATURES OF WORK		**$0**	**$0**	**$0**
	Subtotal		**$8,509,603**	**$110,102**	**$118,810**
	CONTINGENCIES & ALLOWANCES		**SUB TOTAL**		
2.5%	Design-Builder Contingency		$299,933	$2,753	$2,970
LS	Allowance #1: Utility Relocation (Fiber & Gas)		$75,000	$0	$0
	Subtotal		**$8,884,536**	**$112,855**	**$121,780**
RATE	**GENERAL CONDITIONS**		**SUB TOTAL**		
LS	General Conditions		$1,179,480		
LS	Warranty		$41,330		
	Subtotal		**$10,105,346**		
RATE	**INSURANCE, BONDS, AND BUILDERS RISK**		**SUB TOTAL**		
1.00%	General Liability		$119,974		
1.50%	Subcontractor Default Insurance		$137,768		
0.83%	Payment and Performance Bond		$100,165		
LS	Builders Risk Insurance		$74,384		
	Subtotal		**$10,537,637**	**$122,542**	**$132,234**
RATE	**CONTRACTOR'S FEE**		**SUB TOTAL**	**SUB TOTAL**	**SUB TOTAL**
4.50%	Design-Builder Fee		$516,631	**$5,514**	**$5,951**
	Subtotal		**$11,054,268**	**$128,057**	**$138,185**

	Working Project Cost	Access Road	ALT #1 Cross Street Visitor Parking
GMP Without Soft Costs	**$11,054,268**	**$128,057**	**$138,185**

	Project Soft Costs		Total Value
	Phase 2 A/E Design & Preconstruction Fees		$462,765
	Permits and Fees		$79,288
	FF&E Allowance (Other than Fire Station Equipment)		$101,053
2.5%	Owner Contingency		$299,933

	GMP	Access Road	ALT #1 Cross Street Visitor Parking
Guaranteed Maximum Price	**$11,997,307**	**$128,057**	**$138,185**

2.
Basis of GMP

BASIS OF GMP

City of West Wendover New Fire Station No. 13

PWP #EL-2023-434 | August 7, 2023

The Basis of GMP is a written explanation clarifying the scope, assumptions and exclusions used in establishing the Guaranteed Maximum Price (GMP) for the City of West Wendover New Fire Station No. 13 Project in West Wendover Nevada dated August 7, 2023. The GMP is presented in a ten group, systems format best utilized for analyzing and comparing project costs during design and preconstruction. This GMP is based on CORE's incorporation of the scope shown on the West Wendover New FS #13 60% DD documents dated May 3, 2023, and the scope clarifications below.

Assumptions, Clarifications, & Exclusions

SCHEDULE

This GMP is based upon performance of the work per the enclosed Preliminary Construction Schedule, which is an integral part of this GMP Package. This project has been divided into multiple phases, which are identified within the preliminary construction schedule and account for the overall construction duration and timeframe anticipated.

Schedule Clarifications:

- Microsoft Project Professional for Office 365 will be used as the schedule management program.
- We anticipate normal working hours 6:00 AM to 4:00 PM, Monday through Thursday, with some Friday and/or Saturday work as required to meet the schedule. Daily start and finish times are subject to change with changing weather conditions and daily sunrise/sunset time.
- All concrete pours are assumed to be early morning pours. If the authorities having jurisdiction do not allow early morning pours, the concrete pour sequence would be extended which would affect the critical path of the schedule.
- Activities within the Overall project schedule and general sequence of construction will be re-evaluated later when the GMP is executed.
- If the GMP does not start as scheduled on October 16th, 2023, CORE reserves the right to adjust General Conditions costs.
- Permitting timelines are allowances based on average timeframes of similar projects. Any delay caused by the permitting process is cause for a re-evaluation of the schedule and General Conditions.

Weather:

The following table represents a mutual understanding of the number of reasonable days of adverse weather per month where no weather dependent construction activities may occur due to unworkable field conditions. CORE has assumed the risk to make up for lost days per month in accordance with this table.

CORE shall be granted an extension of time for delays resulting from additional lost working days per calendar month beyond what is illustrated in the table in the GMP Proposal. The lost days illustrated in this schedule are per calendar month and shall not accrue from month to month.

(Eastern Nevada – Elko County Region)

Month	Number of Reasonably Anticipated Days of Adverse Weather Per Month	Average Precipitation
January	1	0.25

February	0	0.17
March	1	0.33
April	1	0.36
May	1	0.58
June	0	0.28
July	0	0.22
August	0	0.16
September	1	0.50
October	0	0.34
November	0	0.22
December	0	0.19

CORE considers soil condition that are unsuitable for heavy equipment operation to be adverse weather days. Additionally, driving conditions deemed unsafe for travel shall be deemed adverse weather days. CORE reserves the right to work Fridays and/or Saturdays in order to meet schedule.

Cost Clarifications

This GMP is based on the higher between 2023 Elko County Prevailing Wage Rates and 2023 Davis Bacon Wage Rates and includes Nevada sales tax. The value provided in the GMP includes all direct and indirect construction costs and includes typical project "soft costs". Soft costs included in this GMP are all design fees, loose/miscellaneous fire station equipment, and utility connection fees.

MATERIALS ECONOMIC IMPACTS

The parties acknowledge that some of the materials and products to be used and installed in the construction of this project may become unavailable, delayed in shipment and/or subject to price increases due to circumstances beyond the control of the Contractor. If a specified product is unavailable or shipment is delayed, Contractor shall provide written notice and shall be afforded additional time and substitute products may be considered. If there is an increase in price of materials, equipment, or products between the date of this contract and the time when the job is ready for the installation of the affected material, the amount of this contract shall be increased to reflect the additional cost to obtain the materials, provided that the Contractor gives the Owner written notice and documentation of the increased costs.

CONTINGENCIES

- **Design-Builder Contingency –** A 2.5% Design-Builder Contingency is included in this proposal and is intended to be used at CORE's discretion to cover costs that have not been completely identified or designed as trade specific scope on the GMP setting documents may require further clarification or coordination. These costs include, but not limited to, scope gap, coordination issues between trades, and missed scope during the bidding process. The Design-Builder Contingency is not intended to account for additional scope requests by the design / owner during construction.
- **Owner Contingency –** A 2.5% Owner Contingency is included in this proposal and is intended to be used at the City of West Wendover's discretion to cover costs for unforeseen or excluded items that are to be included as an amendment to the original contract.

ALLOWANCES

We have included the Allowances listed below in this GMP. These Allowances are considered to be an allotted sum of money included for a particular system or scope of work for which sufficient detail is not available to determine a definitive cost. A reasonable estimate for an assumed scope and quality is included as a placeholder. The Owner receives the savings for any amount under the allocation and is at risk for any amount over the allocation.

- **Allowance #1 – Fiber Line Relocation** – This Allowance is intended to cover costs associated with relocating the existing fiber line as to not be impacted by other improvements. Included is trenching, conduit bedding, backfill, conduit, and utility fees and coordination.
- **Allowance #2 – Fire Station Alerting System** – This Allowance is intended to cover costs associated with horns, strobes, controllers, pathways, and miscellaneous accessories associated with the Fire Station Alerting System.

ALTERNATES

Alternates are scopes of work which are NOT INCLUDED as part of the base contract work. They are carried as bid alternates so that if there is money available at the time of the GMP, they can be added to the project at the discretion of the owner.

- **Alternate #1 – Cross Street Visitor Parking** – This Alternate includes earthwork, asphalt, signage, striping, and concrete included with the proposed ADA/visitor parking lot as shown in the design documents.

SOFT COSTS

Soft Costs are scopes of work that are indirectly related to construction but are a necessary part of a project. The following soft costs are accounted for and included in this GMP. This does not represent an all-inclusive listing of all soft costs that may be required, but rather is CORE's understanding of the Soft Costs required to be included in the GMP.

- **A/E Design & Preconstruction Fees** – This scope of work includes architectural, engineering, and preconstruction costs to produce a construction set of documents, as well as provide preconstruction support through the Design Phase of the project.
- **Permits and Fees** – This is intended to cover costs associated with building permit fees for the project, and utility connection, coordination, and design fees for City of West Wendover Water. City of West Wendover electrical, communications, and gas connections are not included in this allowance. Inspections and Certificate of Occupancy costs are not included in this allowance.
- **FF&E Allowance** – This allowance is intended to cover costs associated with furniture, fixtures, and equipment not included elsewhere. The value is based on a list of items required by the City of West Wendover and a 5% additional FF&E allowance. The list of items is as follows:
    - (1) Smart Board, 65" min.
    - (3) Office Desks
    - (4) Tables, 8' x 18", folding
    - (20) office chairs, rolling.
    - Kitchen/Conference Table with seating for (8) with chairs.
    - Dayroom Furniture allowance of $15,000.

HOURLY RATES

The following agreed to hourly rates will be used to determine and define "Wages paid for Labor" as defined in Exhibit C of the Owner-CMAR Construction Agreement. The Actual Costs for each of the agreed to rates includes all normal and customary payroll paid by the Contractor plus all fringe benefits, taxes and insurances.

	Standard Rate	Overtime Rate
Project Management:		
Director of Operations	190	-
Sr. Project Manager	165	-
Project Manager	125	-
MPE/BIM Manager	125	-
Contract Administrator	92	-
Construction Coordinator	92	-
Certified Payroll	92	-
Field Operations:		
General Superintendent	165	-
Superintendent	130	-

Assumptions & Exclusions

GENERAL ASSUMPTIONS

- This GMP is considered lump sum, not line itemed. Scope values are provided for transparency and as a contract schedule of values. Any line-item cost variances will be carried across the duration of the entire project and the net savings (if any) will be split with the Owner per the terms of the contract at final completion. Costs for any individual line items are not guaranteed within this GMP, but rather the bottom-line cost of the GMP. Any cost savings from any individual line items will be offset against possible overruns of any other line items throughout the duration of the project.
- Building permits are to be procured by the Owner and in hand prior to CORE Construction mobilizing on site and Contract Time commencing. CORE shall be granted an extension of time for delays resulting from not having an approved grading / building permit in place on the anticipated start date.
- CORE Construction assumes that the soils / geotechnical report prepared by Summit Engineering is reflective of the soils to be disturbed under this project. Any adverse soil conditions including but not limited to contaminated soils, different shrink/swell factors, etc. shall be cause for a time extension and adjustment of the GMP.
- CORE will coordinate the work with the Owner's contractors and agencies, for example Wells Rural Electric, Centracom, City of West Wendover Water, City of West Wendover Sewer, etc., with their respective scopes as it pertains to this project. The Owner will provide direction related to any conflict. The project schedule has been developed assuming these contractors/agencies will be able to meet all required scheduled installation and/or utility turn-on dates and these dates will be communicated through the Owner. Any costs due to changes made by the permitting agencies after submission of the estimate are subject to change.
- Normal shrinkage cracking of all cementitious material, such as slabs, concrete walls, CMU walls, etc. is expected and shall not be cause for removal or replacement of structurally sound slabs.

- Underground utilities shown on plans are assumed to depict accurate locations of utilities. Design has been based on As-Built documents provided by the city. Discrepancies arising due to inaccurate As-Builts are not included in this GMP proposal.

SPECIFIC EXCLUSIONS

- Land acquisition costs, legal fees, and costs associated with any owner's representatives.
- 3rd party inspections and special inspections.
- Testing and inspection services of special inspectors.
- Services of a commissioning agent.
- Salvaging and relocation of any existing equipment or furnishings, unless otherwise specified.
- Fire pump and domestic water booster pump – available pressure and flow assumed adequate.
- Hard digging / caliche.
- Removal / relocation of existing storage units, equipment stored onsite – assumed by Owner.
- BIM modeling.

Scope-Specific Clarifications

CORE Construction's GMP is based upon plans and specifications as itemized in attached Enumeration of Documents, with the following Scope-Specific Assumptions and Clarifications.

GENERAL REQUIREMENTS

GEN1 – GENERAL REQUIREMENTS

- Temporary fencing, construction-use locks, public safety and project signage, construction toilets & accessories, on-site secured storage, timelapse construction camera, and site security systems are included.

GEN2 – SCAFFOLDING & EQUIPMENT

- Forklift and/or boom lift including fuel and operator expenses are included.

GEN3 – WASTE MANAGEMENT AND CLEANING

- Progressive site cleanup during construction and dumpster rental and removal fees are included.

SITE WORK (ROUGH)

008 – EARTHWORK, UTILITIES, AND PAVING

- Earthwork activities are limited by the grading shown in design documents along with the proposed swale realignment. Grading outside of these boundaries is not included.
- Gas line excavation and backfill is included. Exterior gas piping is assumed to be by utility. Utility connections and fees are not included.
- Tough digging of native soils is not included. Blasting and/or caliche excavation is specifically excluded. Test bores analyzed in the geotechnical report has been assumed to be conducive of the entire site.

SITE WORK (FINISH)

016 – LANDSCAPE

- Landscaping includes the following:
    - 8 Austrian Pines

- 14 Cleveland Flowering Pears
- 8 Lacemore Elms
- 12 Boxwoods
- 12 Karl Foerester Tall Grasses
- 16 Perennials
- Decomposed granite or gravel
- Irrigation water system including meter.

021 – PRE-FABRICATED SITE STRUCTURE

- Pre-fabricated site structures are not included.

023 – FENCING & GATES

- Trash enclosure gate is included.

025 – MASONRY

- A standard grey, 6' high CMU wall with 2" high CMU caps are included at the trash enclosure.
- CMU around generator pad is not included.
- Brick veneer around the building is not included.

STRUCTURE

036 – ROUGH CARPENTRY, EIFS, DRYWALL, AND ACT

- EIFS includes integral and shall be selected based on manufacturer's standard color palette.
- Level 4 drywall finish with light orange peel texture is included for all visible drywall spaces. Non-visible areas are to be finished as required by code.
- FRP/FRL is included for rooms 106 and 112.
- Porch dormer shall be stick framed above truss system sheathing.

ENCLOSURE

054 – OVERHEAD DOORS

- Doors included open at 60 inches per second with a springless design.

052 – GLASS AND GLAZING

- All windows within the Pre-Engineered Metal Building and the office entry door are 1" glass with aluminum frames. All windows on the office side are vinyl framed windows.

FINISHES

056 – DOORS, FRAMES, & HARDWARE

- Vision lites are included for all doors in the Apparatus Bays.

059 – CASEWORK

- Plastic laminate cabinets with stainless steel or quartz countertops are included for all spaces to receive casework.

061 – PAINT

- Painting of Pre-Engineered Metal Building structure is included. Field painting of all insulated metal panels is not included.

066 – FLUID APPLIED FLOORING

- Hermetic flooring is included for rooms 106 and 112.

067 – CONCRETE FINISHING

- Sealed concrete is included for all spaces besides restroom spaces. Polishing of any concrete is not included.

SPECIALTIES

074 – SPECIALTIES

- Bathroom specialties, corner guards, a markerboard, broom/mop holders, fire extinguisher cabinets, and window blinds are included.
- One flagpole is included.

EQUIPMENT

083 – RESIDENTIAL EQUIPMENT AND APPLIANCES

- Kitchen equipment and appliances including dishwasher, oven/stove, refrigerator, ice machine, residential washer/dryer, coffee maker, and microwave with integral vent hood are included.

089 – FIRE STATION EQUIPMENT

- Turnout gear washer/extractors, drying racks, and storage lockers are included.

MP&E SYSTEMS

098 – PLUMBING SYSTEMS

- Two (2) 1-1/2" fire truck fills are included.
- Air system includes a 150psi air compressor, 6 hose reels, 4 air outlets with black steel piping and fittings.
- Sanitary Waste & Vent System: PVC-DWV Pipe and fittings below grade, Cast Iron pipe and fittings above grade.
- Gas piping is extended to (2) gas furnaces in office/kitchen areas.

100 – HVAC

- Overhead vehicle exhaust system is not included.
- Gas furnaces are included in lieu of electric furnaces.

103 – ELECTRICAL

- Existing panels are assumed to have sufficient capacity and sufficient space for new breakers for the new service. Modifications to existing switch gear due to additional equipment not described above or within the design documents is not included.
- Average Daily Traffic (ADT) for N Gene L. Jones Way is assumed to be lower than the MUTCD signal warrant requirements. Accordingly, "Emergency Vehicle Approaching" flashers and signage, along with all associated work, is not included.
- All premiums for lighting are not included.

UNIQUE SCOPES OF WORK

109 – PRE-ENGINEERED METAL BUILDING

- Building interior shall have exposed framing, girts, and insulated metal panel backs. Insulated metal panels shall have the factory primer/paint on the interior and exterior.
- Colors for all metal panels shall be selected from a manufacturer standard color palette.

END OF BASIS OF GMP

3.
Schedule

WEST WENDOVER FIRE STATION - Full Schedule

ID	Task Name	Duration	Start	Finish
1	**WEST WENDOVER FIRE STATION**	**859 days**	**Wed 10/20/21**	**Mon 3/10/25**
2	**Preconstruction Phase**	**594 days**	**Wed 10/20/21**	**Thu 2/22/24**
3	**Project Award**	**141 days**	**Wed 10/20/21**	**Tue 5/10/22**
4	City Council Approval / Notice of Award	10 days	Wed 10/20/21	Tue 11/2/21
5	Reciept of Executed Contract	130 days	Wed 11/3/21	Mon 5/9/22
6	Reciept of Notice to Proceed	1 day	Tue 5/10/22	Tue 5/10/22
7	**Programming Phase**	**83 days**	**Wed 5/25/22**	**Wed 9/21/22**
8	OAC Mtg - Kick Off	1 day	Wed 5/25/22	Wed 5/25/22
9	Programming Questionaire	6 days	Tue 5/31/22	Tue 6/7/22
10	OAC Mtg - Programming Questionaire Rev	1 day	Wed 6/8/22	Wed 6/8/22
11	Programming /Adjacency Diagram Develop	53 days	Thu 6/9/22	Tue 8/23/22
12	OAC Mtg - Programming/Adj Diagram Pres	1 day	Wed 8/24/22	Wed 8/24/22
13	CWW Adjacency Diagram Rvw/Comment	19 days	Thu 8/25/22	Wed 9/21/22
14	*OAC Mtg - CWW Comment Review/Approv*	*0 days*	*Wed 9/21/22*	*Wed 9/21/22*
15	**Schematic Design Phase (Phase 1A)**	**110 days**	**Thu 9/22/22**	**Tue 2/28/23**
16	SD Development/Incorp Rvw Comments	10 days	Thu 9/22/22	Wed 10/5/22
17	OAC Mtg - Schematic Design Status Review	1 day	Thu 10/6/22	Thu 10/6/22
18	Schematic Design Development	10 days	Fri 10/7/22	Thu 10/20/22
19	OAC Mtg - Schematic Design Status Review	1 day	Fri 10/21/22	Fri 10/21/22
20	Schematic Design Development	5 days	Mon 10/24/22	Fri 10/28/22
21	Submit SD Progress Set to CORE for Pricing	1 day	Mon 10/31/22	Mon 10/31/22
22	Schematic Design Development Continued	5 days	Mon 10/31/22	Fri 11/4/22
23	OAC Mtg - Schematic Design Status	1 day	Mon 11/7/22	Mon 11/7/22
24	Schematic Design Development	10 days	Tue 11/8/22	Mon 11/21/22
25	CORE Prelim SD Pricing w/Trade Partners	15 days	Tue 11/1/22	Mon 11/21/22
26	OAC Mtg - SD Estimate Presentation	1 day	Tue 11/22/22	Tue 11/22/22
27	CWW - SD Submittal Review	51 days	Wed 11/23/22	Tue 2/7/23
28	USDA - SD Submittal Review	51 days	Wed 11/23/22	Tue 2/7/23
29	OAC Mtg - CWW/USDA SD Approval	1 day	Tue 2/28/23	Tue 2/28/23
30	**Design Development Phase (Phase 1B)**	**162 days**	**Tue 2/28/23**	**Mon 10/16/23**
31	*Receive NTP for Phase 1B Services*	*0 days*	*Tue 2/28/23*	*Tue 2/28/23*
32	*Prepare/Receive Ph 1B Contract Amendme*	*0 days*	*Tue 2/28/23*	*Tue 2/28/23*
33	*OAC Mtg - Phase 1B Kick Off Mtg*	*0 days*	*Mon 3/6/23*	*Mon 3/6/23*
34	Design Development	21 days	Tue 3/7/23	Tue 4/4/23
35	OAC Mtg - Design Development Review	1 day	Wed 4/5/23	Wed 4/5/23
36	Design Development Cont.	19 days	Thu 4/6/23	Tue 5/2/23
37	OAC Mtg. Review DD progress	1 day	Wed 4/19/23	Wed 4/19/23

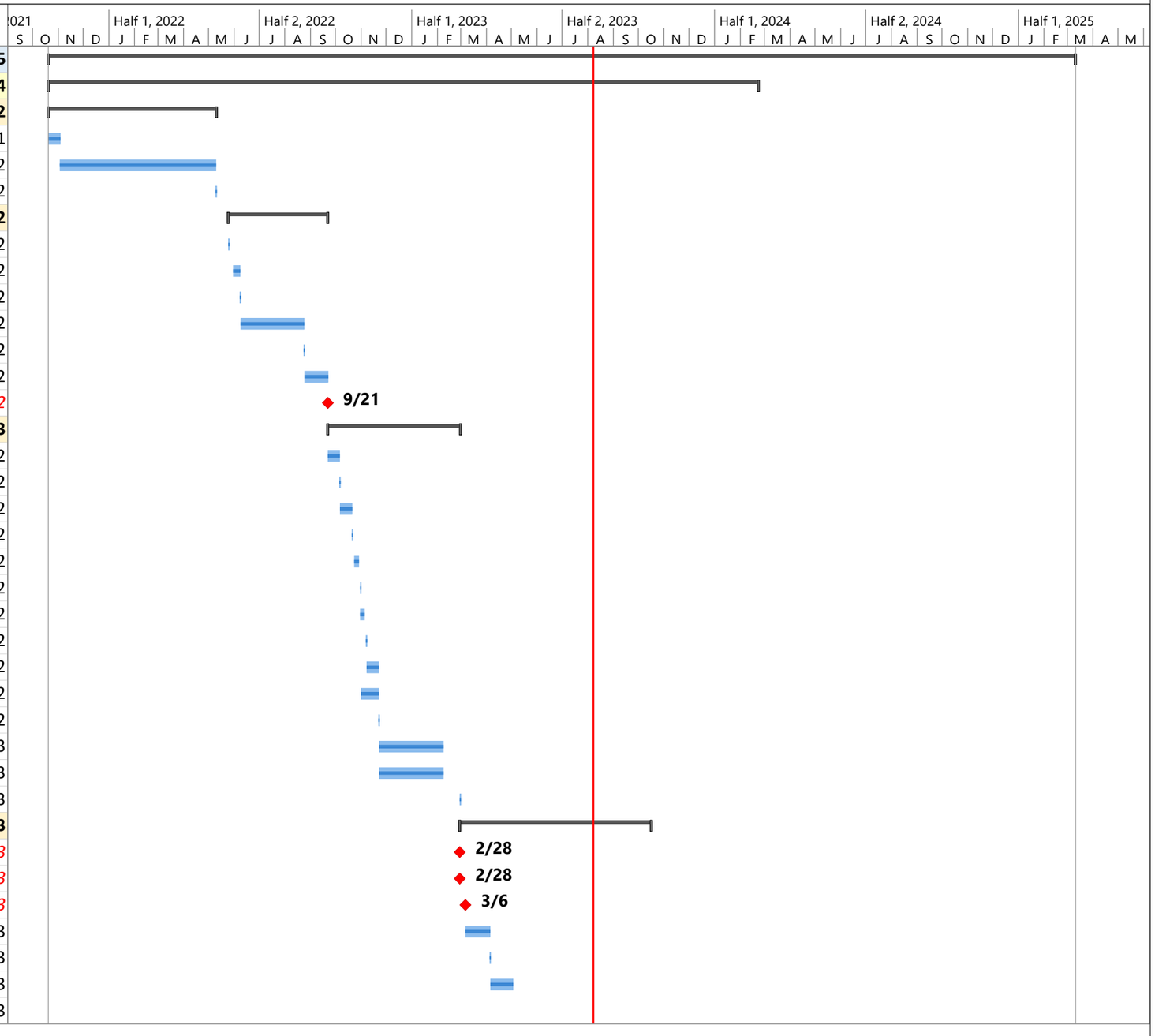

Task | Milestone | Summary | Project Summary | Deadline | Critical | Progress

WEST WENDOVER FIRE STATION - Full Schedule

ID	Task Name	Duration	Start	Finish
38	OAC Mtg - Design Development Presentati	1 day	Wed 5/3/23	Wed 5/3/23
39	PEMB Design	38 days	Thu 5/18/23	Wed 7/12/23
40	CWW Design Development Review	10 days	Thu 5/4/23	Wed 5/17/23
41	OAC Mtg - City Comment Review	1 day	Wed 5/17/23	Wed 5/17/23
42	**GMP Bidding, Review, and Proposal Subm**	**34 days**	**Thu 5/25/23**	**Thu 7/13/23**
43	Release RFP	1 day	Thu 5/25/23	Thu 5/25/23
44	Site Visit	1 day	Tue 6/6/23	Tue 6/6/23
45	RFIs Due	1 day	Fri 6/9/23	Fri 6/9/23
46	*Bids Due*	*0 days*	*Thu 6/22/23*	*Thu 6/22/23*
47	Descope Interview	5 days	Mon 6/26/23	Fri 6/30/23
48	Proposal Review & GMP Prep.	13 days	Mon 6/26/23	Thu 7/13/23
49	*Pre-GMP Review*	*0 days*	*Thu 7/13/23*	*Thu 7/13/23*
50	*OAC Mtg Phase 1B GMP Submittal*	*0 days*	*Fri 7/14/23*	*Fri 7/14/23*
51	CWW Initial Comments	7 days	Mon 7/17/23	Tue 7/25/23
52	Incorporate City Comments	8 days	Wed 7/26/23	Fri 8/4/23
53	*Re-submit Phase 1B Proposal*	*0 days*	*Mon 8/7/23*	*Mon 8/7/23*
54	CWW Phase 1B Submittal Review	50 days	Mon 8/7/23	Mon 10/16/23
55	USDA Phase 1B Submittal Review	50 days	Mon 8/7/23	Mon 10/16/23
56	*OAC Mtg - CWW/USDA Phase 1B Approval*	*0 days*	*Mon 10/16/23*	*Mon 10/16/23*
57	**Construction Document Phase (Phase 2 Fina**	**62 days**	**Mon 10/16/23**	**Tue 1/16/24**
58	*Receive NTP for Phase 2 Services*	*0 days*	*Mon 10/16/23*	*Mon 10/16/23*
59	Prep/Receive Ph2 Contract Amendment	30 days	Tue 10/17/23	Wed 11/29/23
60	OAC Mtg Phase 2 Kick-Off	1 day	Tue 10/17/23	Tue 10/17/23
61	OAC Mtg - Con Doc Status Review	1 day	Thu 11/30/23	Thu 11/30/23
62	100%CD Docs Development	35 days	Tue 10/17/23	Wed 12/6/23
63	OAC Mtg CD Package Presentation	1 day	Thu 12/7/23	Thu 12/7/23
64	CWW CD Review	10 days	Fri 12/8/23	Thu 12/21/23
65	OAC CWW CD Package Comment Review	1 day	Fri 12/22/23	Fri 12/22/23
66	Const Doc Adjustments	4 days	Tue 12/26/23	Fri 12/29/23
67	OAC Mtg - CD Pkg Presentation	1 day	Tue 1/2/24	Tue 1/2/24
68	CWW Review of CD Pkg	5 days	Wed 1/3/24	Tue 1/9/24
69	USDA Review of CD Package	10 days	Wed 1/3/24	Tue 1/16/24
70	*CWW USDA Construction Doc Approval*	*0 days*	*Tue 1/16/24*	*Tue 1/16/24*
71	**Plan Check Review Process**	**37 days**	**Wed 1/3/24**	**Thu 2/22/24**
72	Plan Check Review Submittal	1 day	Wed 1/3/24	Wed 1/3/24
73	Building Department Plan Check Review	15 days	Thu 1/4/24	Wed 1/24/24
74	Fire Marshall Review Process	15 days	Thu 1/4/24	Wed 1/24/24

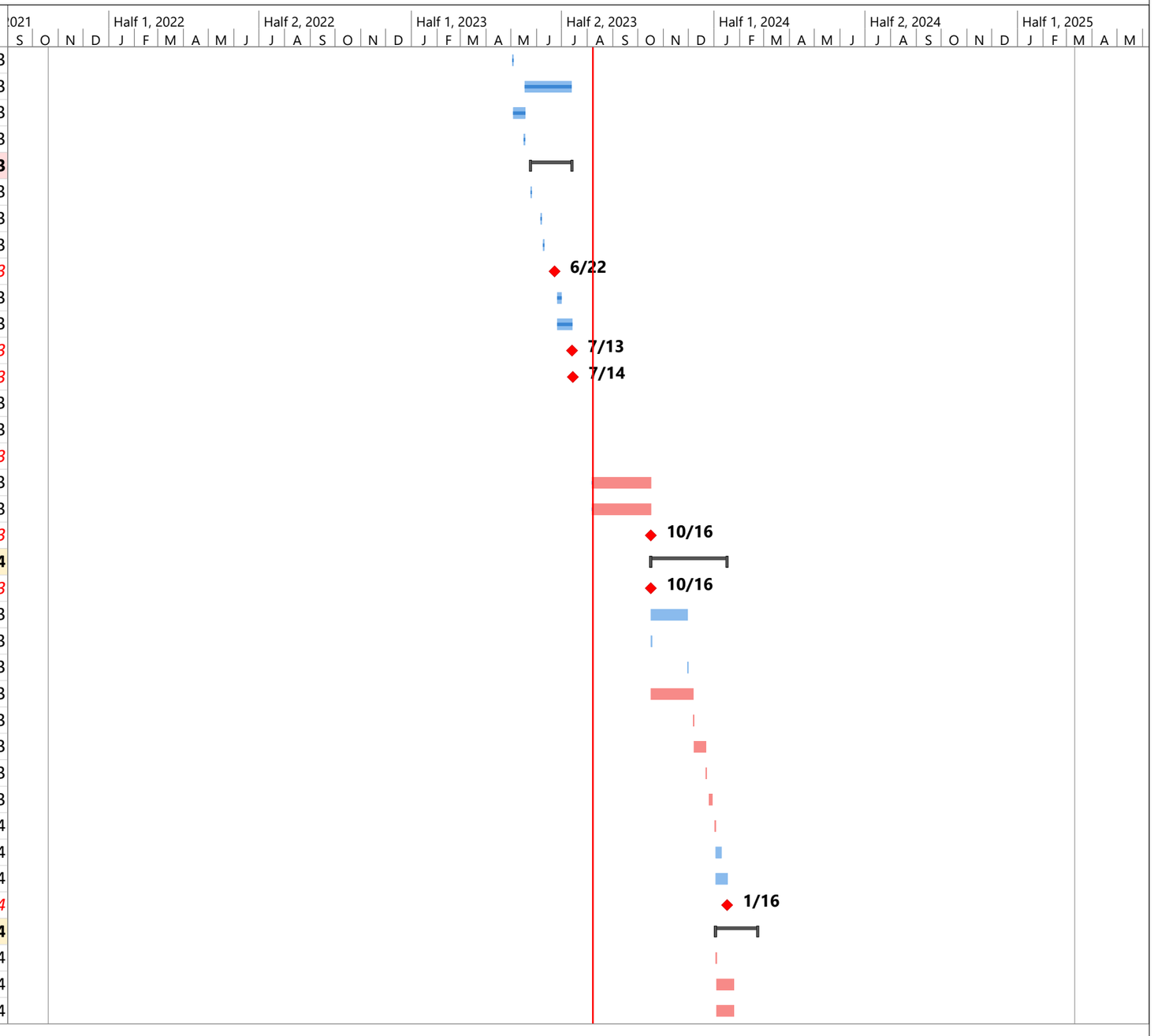

Task Milestone Summary Project Summary Deadline Critical Progress

WEST WENDOVER FIRE STATION - Full Schedule

ID	Task Name	Duration	Start	Finish
75	Receive Building Department Review Comı	1 day	Thu 1/25/24	Thu 1/25/24
76	Receive Fire Marshall Review Comments	1 day	Thu 1/25/24	Thu 1/25/24
77	Address Plan Check Review Comments	10 days	Fri 1/26/24	Thu 2/8/24
78	Address Fire Marshall Review Comments	10 days	Fri 1/26/24	Thu 2/8/24
79	Review Comment Revision Approvals	10 days	Fri 2/9/24	Thu 2/22/24
80	*Plan Check Review Approval*	*0 days*	*Thu 2/22/24*	*Thu 2/22/24*
81	**Construction Phase**	**354 days**	**Mon 10/16/23**	**Mon 3/10/25**
82	**Administrative**	**119 days**	**Mon 10/16/23**	**Thu 4/4/24**
83	*Receive Admin NTP to Procure Materials*	*0 days*	*Mon 10/16/23*	*Mon 10/16/23*
84	Execute Subcontracts	5 days	Tue 10/17/23	Mon 10/23/23
85	Delay Start - Winter	25 days	Fri 2/23/24	Thu 3/28/24
86	*Begin Mobilization*	*0 days*	*Thu 3/28/24*	*Thu 3/28/24*
87	Mobilize Onsite	5 days	Fri 3/29/24	Thu 4/4/24
88	**Procurement**	**237 days**	**Tue 10/24/23**	**Fri 9/27/24**
89	**Procure Submittals**	**97 days**	**Tue 10/24/23**	**Tue 3/12/24**
109	**Procure Deferred Submittals**	**40 days**	**Wed 1/17/24**	**Tue 3/12/24**
113	**Submittal Review**	**112 days**	**Tue 10/31/23**	**Tue 4/9/24**
133	**Review Deferred Submittals**	**15 days**	**Wed 3/13/24**	**Tue 4/2/24**
137	**Procure Materials**	**222 days**	**Tue 11/14/23**	**Fri 9/27/24**
159	**Off-Site Construction**	**36 days**	**Fri 4/5/24**	**Fri 5/24/24**
165	**Rough Site Construction**	**92 days**	**Fri 4/5/24**	**Wed 8/14/24**
179	**Building Construction**	**203 days**	**Tue 4/23/24**	**Mon 2/10/25**
180	**Structure**	**121 days**	**Tue 4/23/24**	**Fri 10/11/24**
195	**Interior - Office**	**82 days**	**Fri 7/12/24**	**Tue 11/5/24**
214	**Enclosure - Office**	**30 days**	**Fri 7/19/24**	**Thu 8/29/24**
223	**Interior - App Bay**	**82 days**	**Mon 10/14/24**	**Mon 2/10/25**
242	**Building Systems**	**55 days**	**Mon 11/18/24**	**Thu 2/6/25**
251	**Finish Site Construction**	**60 days**	**Thu 8/15/24**	**Thu 11/7/24**
263	*Substantial Completion*	*0 days*	*Mon 2/10/25*	*Mon 2/10/25*
264	Complete Punch List	10 days	Tue 2/11/25	Mon 2/24/25
265	Contractual Close Out	20 days	Tue 2/11/25	Mon 3/10/25
266	*Final Completion*	*0 days*	*Mon 3/10/25*	*Mon 3/10/25*

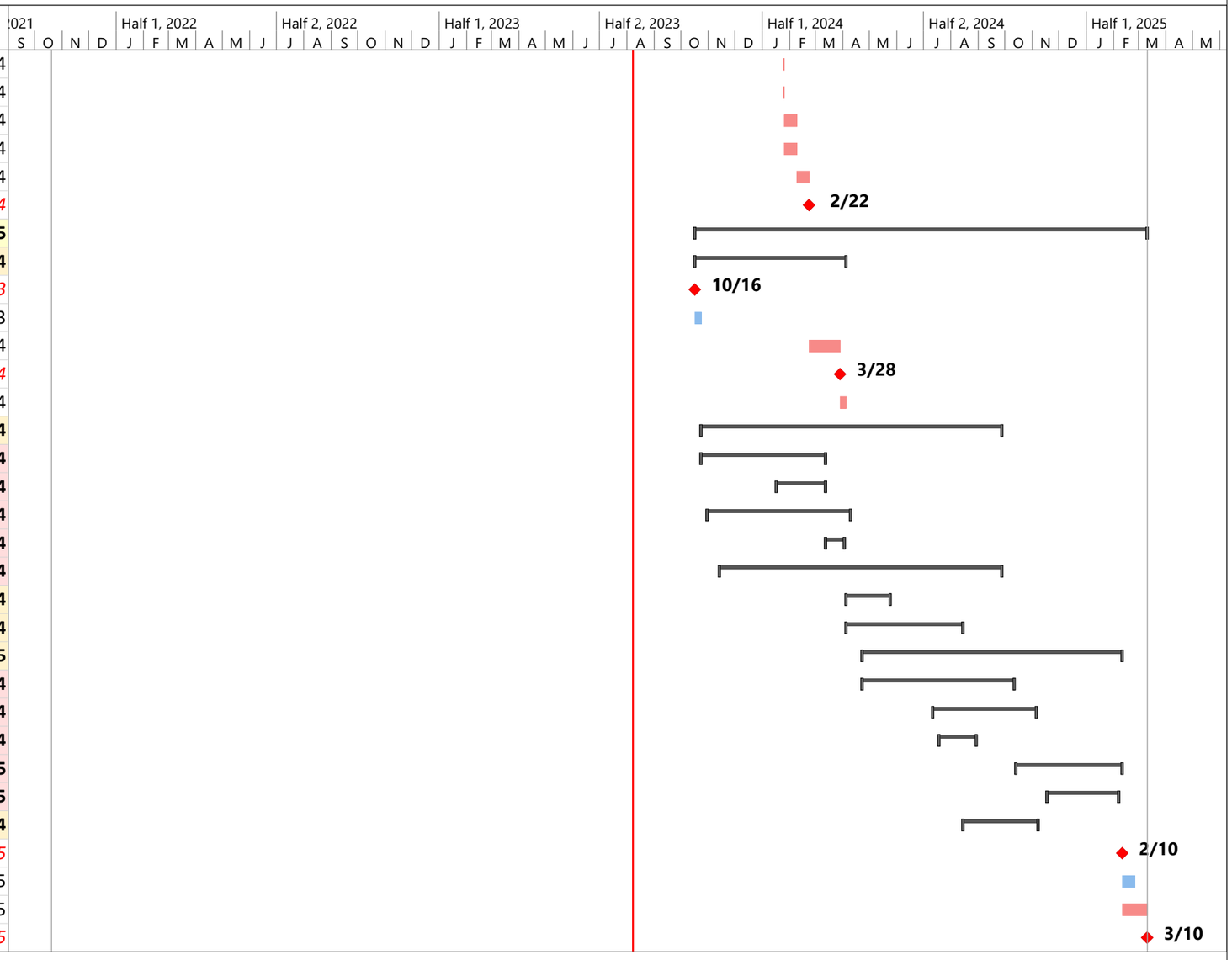

Task | Milestone | Summary | Project Summary | Deadline | Critical | Progress

4.
Design Documents

WEST WENDOVER NEW FS #13

PHASE-1B DESIGN DEVELOPMENT

MAY 3, 2023

PROJECT ADDRESS:

N. GENE L. JONES WAY, WEST WENDOVER, NV 89883



CLIENT:

CITY OF WEST WENDOVER

1111 N. GENE L. JONES WAY
WEST WENDOVER, NV 89883

DESIGN TEAM

DESIGN-BUILDER
CORE WEST, INC.
7150 CASCADE VALLEY COURT
LAS VEGAS, NV 89128
702.794.0550

ARCHITECT
TSK ARCHITECTS
314 SOUTH WATER STREET
SUITE 100, HENDERSON, NV 89015
702.456.3000

CIVIL ENGINEER
SUMMIT ENGINEERING
1150 LAMOILE HIGHWAY
ELKO, NV 89801
775.738.8058

LANDSCAPE ARCHITECT

STRUCTURAL ENGINEER
KIMLEY-HORN
111 EAST BROADWAY
SUITE 600, SALT LAKE CITY, UT 84111
385.212.3176

MECHANICAL ENGINEER
KIMLEY-HORN
5370 KIETZKE LANE
SUITE 100, RENO, NV 89511
775.636.7835

PLUMBING ENGINEER
KIMLEY-HORN
5370 KIETZKE LANE
SUITE 100, RENO, NV 89511
775.636.7835

ELECTRICAL ENGINEER
KIMLEY-HORN
7900 RANCHARRAH PARKWAY
SUITE 100, RENO, NV 89511
775.200.1970

tsk
314 South Water Street,
Suite 100
Henderson, NV 89015
phone: 702.456.3000
fax: 702.898.6209
www.tska.com

THESE DRAWINGS AND SPECIFICATIONS ARE THE PROPERTY OF TATE SNYDER KIMSEY ARCHITECTS AND MAY NOT BE REPRODUCED OR USED FOR ANY PURPOSE WITHOUT THE ARCHITECTS WRITTEN CONSENT. AS INSTRUMENTS OF SERVICE, THESE DOCUMENTS ARE NOT FINAL AND READY FOR USE, AND THEREFORE NOT VALID, UNLESS THEY ARE SEALED, SIGNED AND DATED.
Copyright, Ltd 2023

Consultant

PLEASE RECYCLE

Project
WEST WENDOVER NEW FS #13

N. GENE L. JONES WAY, WEST WENDOVER, NV 89883

Job No: 22-002.00

Owner
CITY OF WEST WENDOVER

PHASE-1B DESIGN DEVELOPMENT
MAY 3, 2023

ABBREVIATIONS

A		E.P.	Electrical Panelboard	LKR.	Locker		
A.D.	Area Drain	E.P.D.M.	Single Ply Roof Membrane	LT.	Light	S	
A.V.	Audio/Visual	E.W.C.	Electric Water Cooler			S.	South
ACC.	Accessible	EA.	Each	M		S.C.	Solid Core
ACOUS.	Acoustical	ELEC.	Electrical	M.C.	Medicine Cabinet	S.C.D.	Seat Cover Dispenser
ADJ.	Adjustible	ELEV.	Elevation	M.O.	Masonry Opening	S.D.	Soap Dispenser
AGGR.	Aggregate	EMER.	Emergency	MAX.	Maximum	S.N.D.	Sanitary Napkin Dispensr
AL.	Aluminum	ENCL.	Enclosure	MECH.	Mechanical	S.SK.	Service Sink
APPROX.	Approximate	EQ.	Equal	MEMB.	Membrane	SCHED.	Schedule
ARCH	Architectural	EQUIP.	Equipment	MFGR.	Manufacturer	SECT.	Section
ASPH.	Asphalt	EXIST.	Existing Exposed	MH.	Manhole	SH.	Shelf
		EXP.	Expansion	MIN.	Minimum	SHR.	Shower
B		EXT.	Exterior	MIR.	Mirror	SHT.	Sheet
B.O.F.	Bottom of Fixture			MISC.	Miscellaneous	SIM.	Similar
BD.	Board	F		MTD.	Mounted	SPEC.	Specification
BITUM.	Bituminous	F.A.	Fire Alarm	MTL.	Metal	SQ.	Square
BLDG.	Building	F.B.	Flat Bar	MUL.	Mullion	SST.	Stainless Steel
BLK.	Block	F.D.	Floor Drain			STA.	Station
BLKG.	Blocking	F.E.	Fire Extinguisher	N		STD.	Standard
BM.	Beam	F.E.C.	Fire Extinguisher Cabinet	N.	North	STL.	Steel
BOT.	Bottom	F.H.C.	Fire Hose Cabinet	N.I.C.	Not in Contract	STO.	Storage
		F.O.C.	Face of Concrete	N.T.S.	Not to Scale	STRL.	Structural
C		F.O.F.	Face of Finish	NO. OR #	Number	SUSP.	Suspended
C.B.	Catch Basin	F.O.S.	Face of Stud	NOM.	Nominal	SYM.	Symmetrical
C.F.C.I.	Contractor Furnished Contractor Installed	F.S.	Full Size	O		T	
C.F.O.I.	Contractor Furnished Owner Installed	FDN.	Fountain	O.A.	Overall	T.&G.	Tongue and Groove
C.G.	Corner Guard	FIN.	Finish	O.C.	On Center	T.B.	Towel Bar
C.I.	Cast Iron	FLASH.	Flashing	O.D.	Outside Diameter (Dim.)	T.C.	Top of Curb
C.J.	Control Joint	FLOUR.	Flourescent	O.F.C.I.	Owner Furnished Contractor Installed	T.O.W.	Top of Wall
C.M.U.	Concrete Masonry Unit	FLR.	Floor	O.F.O.I.	Owner Furnished Owner Installed	T.P.	Top of Pavement
CAB.	Cabinet	FPRF.	Fireproof	O.H.	Opposite Hand	T.P.D.	Toilet Paper Dispenser
CEM.	Cement	FT.	Foot or Feet	O.R.D.	Overflow Roof Drain	T.V.	Television
CER.	Ceramic	FTG.	Footing	OBS.	Obscure	TEL.	Telephone
CLG.	Ceiling	FURR.	Furring	OFF.	Office	TER.	Terazzo
CLKG.	Caulking	FUT.	Future	OPNG.	Opening	THK.	Thick
CLO.	Closet			OPP.	Opposite	TRD.	Tread
CLR.	Clear	G				TYP.	Typical
CNTR.	Counter	G.B.	Grab Bar	P			
COL.	Column	G.F.R.C.	Glass Fiber Reinforced Concrete	P.LAM.	Plastic Laminate	U	
CONC.	Concrete	GA.	Guage	P.T.D.	Paper Towel Dispenser	U.N.O.	Unless Noted Otherwise
CONN.	Connection	GALV.	Galvanized	P.T.D./R.	Combination Paper Towel Dispencer and Receptacle	UNF.	Unfinished
CONST.	Construction	GL.	Glass			UR.	Urinal
CONT.	Continuous	GND.	Ground	P.T.R.	Paper Towel Receptacle	V	
CORR.	Corridor	GR.	Grade	PL.	Plate	V.B.	Vapor Barriers
CPT.	Carpet	GYP.	Gypsum	PLAS.	Plaster	V.C.G.	Vinyl Corner Guard
CT.	Ceramic Tile			PLYWD	Plywood	V.T.	Vinyl Tile
CTR.	Center	H		PR.	Pair	VAR.	Varies
CTSK.	Countersunk	H.B.	Hose Bibb	PRCST.	Pre-cast	VERT.	Vertical
		H.M.	Hollow Metal	PT.	Point	VEST.	Vestibule
D		HDWD.	Hardwood	PTN.	Partition		
D.F.	Drinking Fountain	HDWE.	Hardware			W	
D.O.	Door Opening	HGT.	Height	Q		W.	West
D.S.P.	Dry Standpipe	HORIZ.	Horizontal	Q.T.	Quarry Tile	W.C.	Water Closet
DBL.	Double	HR.	Hour			W/	With
DEPT.	Department	I		R		W/O	Without
DET.	Detail	I.D.	Inside Diameter (Dim.)	R.	Riser	WD.	Wood
DIA.	Diameter	INSUL.	Insulation	R.D.	Roof Drain	WK.P.	Working Point
DIM.	Dimension	INT.	Interior	R.O.	Rough Opening	WP.	Waterproof
DISP.	Dispenser	J		R.W.L.	Rain Water Leader	WSCT.	Wainscot
DN.	Down	JAN.	Janitor	RAD.	Radius	WT.	Weight
DR.	Door	JT.	Joint	REF.	Reference		
DS.	Downspout	K		REFR.	Refrigerator		
DWG.	Drawing	KIT.	Kitchen	REINF.	Reinforce		
DWR.	Drawer	L		REQD	Required		
E		LAB.	Laboratory	RESIL.	Resilient		
(E)	Existing	LAM.	Laminate	RGTR.	Register		
E.	East	LAV.	Lavatory	RM.	Room		
E.I.F.S.	Exterior Insulation Finish System			RRM	Restroom		
E.J.	Expansion Joint			RWD	Redwood		

SYMBOL LEGEND

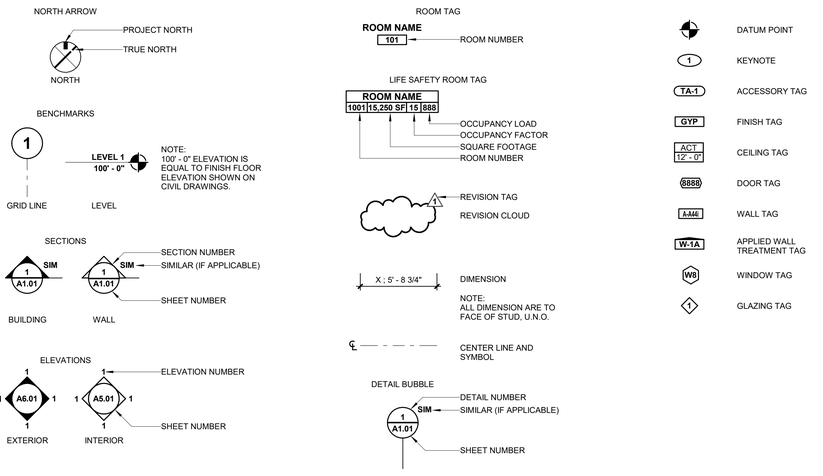

MATERIALS LEGEND

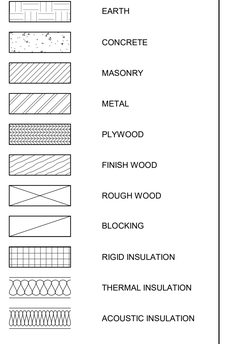

VICINITY MAP

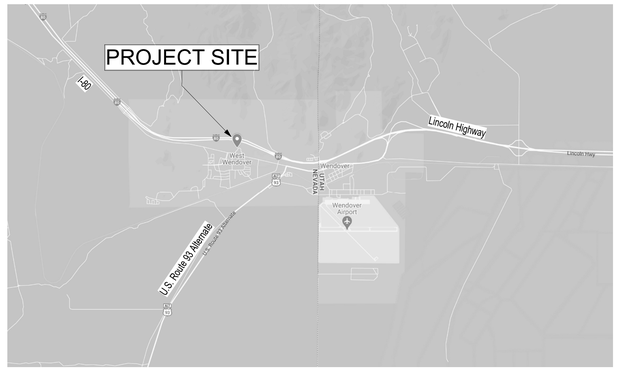

CODE ANALYSIS

CITY OF WEST WENDOVER - ADOPTED BUILDING CODES

- 2018 Edition of the International Building Code (IBC), together with Appendix Chapters C, E, I, and J.
- 2018 Edition of the International Residential Code (IRC), together with Appendix Chapters A, B, C, G, H, J, K, and M.
- 2018 Edition of the International Fire Code (IFC), together with all appendices.
- 2018 Edition of the International Existing Building Code (IEBC).
- 2018 Edition of the International Energy Conservation Code (IECC), Commercial and Residential Provisions chapter 1 through 5.
- 2018 Edition of the Uniform Plumbing Code (UPC), together with Appendix Chapters A, B, C, D, E, G, I, J, K and L.
- 2018 Edition of the Uniform Mechanical Code (UMC), together with Appendix Chapters A, B and C *Only when IMC is silent.
- 2018 International Mechanical Code (IMC), together with Appendix Chapters A and B.
- 2018 International Fuel Gas Code (IFGC), together with Appendix Chapters A, B, C and D.
- 2018 Edition of the International Wildland-Urban Interface Code, chapter 5.
- 2017 Edition of the National Electrical Code (NEC).
- National Fire Protection Association standards, editions as adopted by the State of Nevada.
- Suggested 2018 Design Criteria:
  1. Roof Snow Load - See Table 1608.2.1 from 2018 Northern Nevada Code Amendments
  2. Wind Speed (mph) - Exposure "C"
     a. IRC: I 00 mph
     b. IBC Basic Design Wind Speed:
        Risk Category I: 95 mph — Risk Category III: 110 mph
        Risk Category II: 105 mph — Risk Category IV: 115 mph
  3. Seismic Design Category:
     a. IRC: 02 b. IBC: D
  4. Frost Depth: 24 inches minimum
  5. Winter Design Temperature: 10° F
  6. Ice Shield Underlayment Required: Yes > 5,300 ft elevation
  7. Flood Hazards: per current FEMA flood maps
  8. Air Freezing Index: 594
  9. Mean Annual Temperature: 49.4° F
  10. Subject to Damage From:
      a. Weathering: Severe — c. Decay: None/Slight
      b. Termite: Moderate/Heavy

APN: 010-740-900

ZONING
Land use: 400 / Land zoning: M

FEMA
Flood Zone: AO

Additional Applicable Codes:
- **ICC/ANSI** 117.1 - 2009
- **ADA** 2010
- **NORTHERN NEVADA AMENDMENTS 2018**
- **NAC** - 477

Occupancy Classifications:
- S-2 Occupancy (Section 311.3) - Main occupancy
- B Occupancy (Section 304.1) - Accessory to "S-2" Occupancy, per section 508.2
  No occupancy separation required, per section 508.2.4

Fire Sprinklers Provided: **Yes - Installed in accordance with Section 903.3.1.1**

- Construction Type: **Type V-B**
- Allowable Height: 3 Story (Table 504.4) / 60'(Table 504.3)
- Actual Height: **28'- 0" / 1 Story**
- Allowable Area factor: 54,000 (S-2 Occupancy) (Table 506.2)
- Frontage increase (If): 75% (Section 506)
- Allowable Area with Increase: Aa = At + (NS x If) --> [54,000+ [13,500 x 0.75]] = 64,125 sf
- Actual Area: 11,457 SF

Required separation of occupancies: **No Separation Required (Table 508.4)**

Fire Resistance Rating Requirements: **(Table 601)**

- Structural Frame: 0-hr
- Bearing Exterior Walls: 0-hr
- Bearing Interior Walls: 0-hr
- Non-Bearing Exterior Walls: 0-hr
- Non-Bearing Interior Walls: 0-hr
- Floor: 0-hr
- Roof: 0-hr

Maximun area of exterior wall openings: No Limit
(Table 705.8)

Means of Egress

- Spaces with One Exit: (Table 1006.2.1)
  Occupant count up to and including **29** allowed on 1 exit for "S" occupancy with maximun common path of egress **100 ft.**; and **49** allowed on 1 exit for "B" occupancy with maximun common patch of **100 ft.**
- Exit access travel distace: (Table 1017.2)
  S-2: 400 ft.
  B: 300 ft.
- Corridor fire-resistance rating (Table 1020.1)
  S: 0-hr
  B: 0-hr

Total occupant load: (Table 1004.5 and sheet AE1.01 with the Life Safety Plan)
S-2: 52 occupants
B: 29 occupants

IECC – 2018 (International Energy Conservation Code)
Nevada is Climate **Zone 5B** (Elko County)

Table C402.1.3 – Building Envelope Minimum Requirements (Opaque Assemblies)

Item:	Required:	Provided:
Roof (Continuous above Deck)	R-30ci	R-30
Mass Walls (Framed)	R-11.4ci	N/A
Wood Framed Walls	R-13 + R-3.8ci or R-20	R-20
Slab on Grade Floors	R-10 for 24" below	R-12
Opaque Doors (non-swinging)	R-4.75	R- 4.75

Table C402.4 – Building Envelope Requirements: Fenestration

Fixed Fenestration	U- 0.38
Operable Fenestration	U- 0.45
Entrance Doors	U- 0.77
Over Head Door	U- 0.77
SHGC	SEW: 0.38 N: 0.51

Section C402.5 – Air Leakage (Mandatory)
Continuous Air Barrier is required

Section: C402.5.1 – Air Barriers
A continuous air barrier is required and must comply with C402.5.1.2.1
Roof: Extruded polystyrene insulation board ½" thick min.
Foil-back polyisocyanurate insulation board having a thickness of not less than ½".
Fully adhered single-ply roof membrane.
Walls: Exterior or Interior gypsum board having a thickness of not less than ½".
Portland cement/sand parge, or gypsum plaster having a thickness of not less than 5/8".

Plumbing Fixtures Count

Section 2902 The number of fixtures shall be determined by this code,
(Based on Table 2902.1 requirements). see Calculations below.

Table 2902.1 Minimum Number of Required Plumbing Fixtures

	OCCUPANCY	WATER CLOSETS M	WATER CLOSETS F	LAVATORIES M	LAVATORIES F	BATHTUBS OR SHOWERS	DRINKING FOUNTAINS	SERVICE SINK
FIXTURE REQUIREMENTS	GROUP S-2	1 per 100		1 per 100		-	1 per 1000	
	52 OCCUPANTS	26	26	18	18	n/a	0.05	1
		0.26	0.26	0.26	0.26			
	GROUP B	Table 2902.1, Row No. 2		Table 2902.1, Row No. 3		-	1 per 100	
	29 OCCUPANTS	14.5	14.5	14.5	14.5	n/a	0.29	1
		0.58	0.58	0.36	0.36			
	REQUIRED:	2	2	2	2	0	1	2
	PROVIDED:	2	2	2	2	0	1	2

DRAWING INDEX

#	SHEET NAME	1B DD (05.04.2023)	100% DD (DATE)	50% CD (DATE)	100% CD (DATE)
00_COVER SHEET					
0.0	COVER SHEET	■			
01_GENERAL					
G0.00	GENERAL SHEET	■			
G1.01	GENERAL ACCESSIBILITY DETAILS	■			
G1.02	GENERAL ACCESSIBILITY DETAILS	■			
G1.03	GENERAL ACCESSIBILITY DETAILS	■			
AE1.01	LIFE SAFETY PLAN	■			
AE2.01	LIFE SAFETY DETAILS	■			
02_CIVIL					
C-1	TITLE SHEET	■			
C-2	GENERAL NOTES SHEET	■			
C-3	SITE PLAN	■			
C-4	GRADING PLAN	■			
C-5	UTILITY PLAN	■			
C-6	PARKING & PAVING PLAN	■			
C-7	DETAIL SHEET	■			
03_LANDSCAPE					
L0.00					
04_ARCHITECTURAL SITE					
AS1.01	OVERALL SITE PLAN	■			
AS1.11	ARCHITECTURAL SITE PLAN (ENLARGED)				
AS2.01	ARCHITECTURAL SITE DETAILS	■			
05_ARCHITECTURAL					
A1.01	OVERALL FLOOR PLAN	■			
A1.11	DIMENSION PLAN	■			
A1.21	ENLARGED PLANS AND ELEVATIONS	■			
A1.22	ENLARGED PLANS AND ELEVATIONS	■			
A1.31	FINISH PLAN	■			
A1.41	FURNITURE PLAN				
A2.01	BUILDING MATERIAL SCHEDULES & ROOM FINISH SCHEDULE	■			
A2.11	DOOR SCHEDULE, PANEL AND FRAME TYPES	■			
A2.15	DOOR DETAILS				
A2.21	WINDOW TYPES	■			
A2.25	WINDOW DETAILS				
A2.31	PARTITION TYPES	■			
A2.35	PARTITION DETAILS				
A2.41	INTERIOR PLAN DETAILS				
A2.51	SIGNAGE PLAN				
A2.55	SIGNAGE SCHEDULE, SIGNAGE TYPES & DETAILS				
A3.01	REFLECTED CEILING PLAN	■			
A3.11	CEILING DETAILS				
A4.01	OVERALL ROOF PLAN	■			
A4.11	ROOF PLAN (1/8")				
A4.21	ROOF DETAILS				
A5.01	INTERIOR ELEVATIONS	■			
A5.02	INTERIOR ELEVATIONS	■			
A5.11	INTERIOR ELEVATION DETAILS				
A6.01	EXTERIOR ELEVATIONS	■			
A6.02	EXTERIOR ELEVATIONS	■			
A6.11	EXTERIOR ELEVATION DETAILS				
A7.01	BUILDING SECTIONS	■			
A7.11	WALL SECTIONS	■			
A7.21	SECTION DETAILS				
A8.01	CASEWORK PLAN AND ELEVATIONS				
A8.11	CASEWORK SECTIONS AND DETAILS				
A9.01	MISCELLANEOUS DETAILS				
06_STRUCTURAL					
S1.01	STRUCTURAL GENERAL NOTES	■			
S1.02	DESIGN LOADS	■			
S1.03	ABBREVIATIONS AND SCHEDULES	■			
S1.10	FOUNDATION PLAN	■			
S1.11	SLAB-ON-GRADE PLAN	■			
S1.20	ROOF FRAMING PLAN	■			
S2.01	ELEVATIONS	■			
S5.01	FOUNDATION DETAILS	■			
S5.02	FOUNDATION DETAILS	■			
S5.03	FOUNDATION DETAILS	■			
S5.04	FOUNDATION DETAILS	■			
S5.11	SLAB-ON-GRADE DETAILS	■			
S5.12	SLAB-ON-GRADE DETAILS	■			
S5.21	WOOD DETAILS	■			
S5.22	WOOD DETAILS	■			
S5.23	WOOD DETAILS	■			
S5.24	WOOD DETAILS	■			
S5.26	WOOD DETAILS	■			
08_MECHANICAL					
M0.00	MECHANICAL SYMBOLS, ABBREVIATIONS, AND NOTES	■			
M0.02	MECHANICAL SCHEDULES	■			
M2.00	MECHANICAL FLOOR PLAN	■			
M6.00	MECHANICAL DETAILS	■			
09_PLUMBING					
P0.00	PLUMBING SYMBOLS, ABBREVIATIONS, AND NOTES	■			
P0.02	PLUMBING SCHEDULES	■			
P2.00	PLUMBING FLOOR PLAN - WASTE AND VENT	■			
P2.01	PLUMBING FLOOR PLAN - WATER	■			
P6.00	PLUMBING DETAILS	■			
10_ELECTRICAL					
E0.00	ELECTRICAL SYMBOLS, ABBREVIATIONS, AND NOTES	■			
E0.01	ELECTRICAL SPECIFICATIONS	■			
E1.00	SITE ELECTRICAL PLAN	■			
E2.01	POWER PLAN	■			
E2.02	LIGHTING PLAN	■			
E6.00	SINGLE LINE DIAGRAM	■			
E6.01	PANEL SCHEDULES	■			
E6.02	ELECTRICAL DETAILS	■			
E6.03	ELECTRICAL DETAILS	■			
11_FIRE ALARM					
F0.00	FIRE ALARM RISER DIAGRAM	■			
F1.01	FIRE ALARM PLAN	■			

GENERAL NOTES

1. ALL CONSTRUCTION SHALL CONFORM TO THE AMERICANS WITH DISABILITIES ACT (ADA), LOCAL GOVERNING FIRE, SAFETY, AND BUILDING CODES, REQUIREMENTS AND REGULATIONS, 2018 IBC, ANSI A117.1 -2009.
2. ALL DIMENSIONS ARE TO THE FACE OF CONCRETE OR MASONRY, FACE OF STUD WALLS, OR CENTERLINE OF COLUMNS UNLESS NOTED OTHERWISE.
3. COORDINATE ALL DISCIPLINES AND ALL ASPECTS OF WORK. CONFLICTS AND DISCREPANCIES SHALL BE BROUGHT TO THE ATTENTION OF THE ARCHITECT IMMEDIATELY.
4. ALL FINISH ELEVATIONS ARE TO TOP OF WALKS, GRADE, PAVING, WALLS, ROOFS, AND SLABS ETC., UNLESS NOTED OTHERWISE
5. ALL SOIL BERMS SHALL BE CONSTRUCTED TO DRAIN AWAY FROM VERTICAL SURFACES
6. ALL GROUND PREPARATION SHALL BE IN CONFORMANCE WITH THE RECOMMENDATIONS OF THE GEOTECHNICAL REPORT. THE CONTRACTOR SHALL BE RESPONSIBLE TO OBTAIN A COPY OF THIS REPORT. ALL RECOMMENDATIONS AND REQUIREMENTS CONTAINED WITHIN THE SOILS REPORT ARE TO BE FOLLOWED UNLESS SPECIFICALLY NOTED OTHERWISE IN THE DRAWINGS OR TECHNICAL SPECIFICATIONS
7. ALL CONCRETE SURFACES WHICH RECEIVE A SPECIAL FINISH, FLOOR COVERING, COATINGS, HARDENERS, ETC. SHALL BE CONSTRUCTED IN ACCORDANCE WITH THE SPECIFIC FINISH MANUFACTURER'S SPECIFICATIONS AND INSTRUCTIONS. PRIOR TO APPLICATION OF A SPECIAL FINISH, A WRITTEN ACCEPTANCE OF THE SURFACE SHALL BE SUBMITTED TO THE ARCHITECT BY THE GENERAL CONTRACTOR
8. SLOPE ALL CONCRETE SURFACES ADJACENT TO THE BUILDING AWAY FROM THE BUILDING
9. ALL CONCRETE SURFACES UPON WHICH PEDESTRIANS CAN WALK SHALL BE FINISHED SUCH THAT THE MINIMUM STATIC COEFFICIENT OF SLIDING FRICTION BETWEEN THE SURFACE AND NORMAL HARD-SOLED SHOES = 0.60 AND 0.80 FOR RAMPS
10. ALL CONCRETE AND MASONRY CONNECTIONS AND JOINTS SHALL BE COMPLETELY SEALED AND WATERPROOFED WITH BACKER ROD AND SEALANT AS RECOMMENDED AND SPECIFIED BY EACH SPECIFIC APPLICATION
11. ALL EXPANSION JOINTS IN CONCRETE FLOORS SHALL BE COMPLETELY CAULKED AND SEALED
12. CONTRACTOR SHALL COORDINATE ALL CONCRETE SLABS TO SLOPE AWAY FROM BUILDING, TO SLOPE TOWARD DRAINS, ETC., IN ACCORDANCE WITH THE ARCHITECTURAL AND STRUCTURAL DRAWINGS
13. ALL CONCRETE BLOCK SURFACES ADJACENT TO SOIL BERMS AND PLANTERS SHALL BE PROVIDED WITH A MONOLITHIC WATERPROOF SYSTEM EXTENDING FROM TOP OF FOOTING TO 2" ABOVE SOIL
14. ALL PLANTER AND RETAINING WALLS SHALL BE CONSTRUCTED WITH 3/4" DIAMETER PVC WEEP HOLES AT 6'-0" O.C. MAXIMUM
15. ALL EXPOSED WELDS SHALL BE GROUND SMOOTH AND FINISHED WITH NO PITS FOR ARCHITECTURAL APPEARANCE
16. ALL EXPOSED METAL SURFACES THAT ARE NOT PREFINISHED ARE TO BE PAINTED
17. PROVIDE METAL STRAPPING AND ANCHORAGE FOR CEILING AND WALL MOUNTED EQUIPMENT
18. ALL SHEET METAL FLASHINGS ARE TO BE IN ACCORDANCE WITH ARCHITECTURAL SHEET METAL MANUAL AS PRODUCED BY SHEET METAL AND AIR CONDITIONING CONTRACTORS NATIONAL ASSOCIATION (SMACNA)
19. PROVIDE SEPARATION AND/OR APPROPRIATE COATING BETWEEN ALL DISSIMILAR METALS. ALL TRANSITIONS BETWEEN SIMILAR OR DISSIMILAR MATERIALS, EQUIPMENT, ACCESSORIES, ETC. SHALL BE CAULKED AND/OR SEALED AS REQUIRED
20. CONTRACTOR SHALL FIELD VERIFY DIMENSIONALLY ALL OPENINGS PRIOR TO MANUFACTURING WINDOW AND DOOR FRAMES
21. ALL DOOR AND FRAME ASSEMBLIES AND INSTALLATIONS SHALL BE IN STRICT ACCORDANCE WITH UNIFORM LIFE SAFETY CODES GOVERNING EDITION. ALL EXTERIOR DOORS SHALL BE COMPLETE WITH PROPER THRESHOLDS, ASTRAGALS, WEATHERSTRIPPING, HOLDS AND DOOR BOTTOMS
22. ALL FIRE EXTINGUISHER FINISH ELEVATIONS ARE TO TOP OF WALKS, GRADE, PAVING, WALLS, ROOFS, ETC., UNLESS NOTED OTHERWISE. LOCATIONS TO BE FINALIZED BY THE STATE FIRE MARSHAL. LOCATIONS SHOWN ON THE DRAWINGS ARE FOR REFERENCE ONLY
23. COATINGS MUST COMPLY WITH ALL LOCAL AND FEDERAL LAWS GOVERNING VOLATILE ORGANIC COMPOUNDS, AND ALL ENVIRONMENTAL PROTECTION AGENCY RECOMMENDATIONS
24. CONTRACTOR SHALL NOT SCALE ANY DRAWING IN THIS BID SET
25. THE AUTOMATIC FIRE SPRINKLER DRAWINGS, THE HYDRAULIC CALCULATIONS AND THE MATERIAL SPECIFICATIONS SHALL BE SUBMITTED TO THE STATE OF NEVADA, OFFICE OF THE STATE FIRE MARSHAL BY A LICENSED FIRE SPRINKLER CONTRACTOR FOR REVIEW PRIOR TO INSTALLATION
26. THE FIRE ALARM DRAWINGS AND MATERIAL SPECIFICATIONS SHALL BE SUBMITTED TO THE STATE OF NEVADA OFFICE OF THE STATE FIRE MARSHAL BY A LICENSED CONTRACTOR FOR REVIEW PRIOR TO INSTALLATION. "... THESE DEFERRED SUBMITTAL ITEMS SHALL BE SUBMITTED TO THE REGISTERED DESIGN PROFESSIONAL IN RESPONSIBLE CHARGE WHO SHALL REVIEW THEM AND FORWARD THEM TO THE BUILDING OFFICIAL WITH A NOTATION INDICATING THAT THE DEFERRED SUBMITTAL DOCUMENTS HAVE BEEN REVIEWED AND THAT THEY HAVE BEEN FOUND TO BE IN GENERAL CONFORMANCE WITH THE DESIGN OF THE BUILDING. THE DEFERRED SUBMITTAL ITEMS SHALL NOT BE INSTALLED UNTIL THEIR DESIGN AND SUBMITTAL DOCUMENTS HAVE BEEN APPROVED BY THE BUILDING OFFICIAL..." SEE MECHANICAL, ELECTRICAL, PLUMBING AND STRUCTURAL FOR ADDITIONAL DEFERRED SUBMITTAL REQUIREMENTS
27. CONTRACTOR IS RESPONSIBLE FOR COORDINATING THE LOCATION OF THE ACCESS DOORS FOR PLUMBING VALVES, CLEAN OUTS, WATER HAMMER ARRESTORS ETC. TO ENSURE SERVICEABILITY OF THE EQUIPMENT. ALL ACCESS DOORS LOCATED ON WALLS SHALL BE PAINTED TO MATCH WALL. ALL ACCESS PANELS LOCATED IN CEILINGS SHALL BE PAINTED TO MATCH CEILING. ALL ACCESS DOORS EASILY ACCESSIBLE TO THE PUBLIC SHALL BE LOCKABLE. PROVIDE A CYLINDER LOCK WITH LATCH AND TWO KEYS FOR EACH DOOR
28. ALL NOTES, DETAILS, SPECIFICATIONS, AND OTHER PROVISIONS INCLUDED IN THESE CONTRACT DOCUMENTS, WHETHER CROSS REFERENCE OR NOT, ARE PART OF THIS PROJECT. ALL WORK SHOWN HEREIN SHALL BE PERFORMED WITHOUT EXCEPTION

tsk
314 South Water Street,
Suite 100
Henderson, NV 89015
phone: 702.456.3000
fax: 702.898.6209
www.tska.com

THESE DRAWINGS AND SPECIFICATIONS ARE THE PROPERTY OF TATE SNYDER KIMSEY ARCHITECTS AND MAY NOT BE REPRODUCED OR USED FOR ANY PURPOSE WITHOUT THE ARCHITECTS WRITTEN CONSENT. AS INSTRUMENTS OF SERVICE, THESE DOCUMENTS ARE NOT FINAL AND READY FOR USE, AND THEREFORE NOT VALID, UNLESS THEY ARE SEALED, SIGNED AND DATED.

Copyright, Ltd 2023

Consultant

PLEASE RECYCLE

Project
WEST WENDOVER NEW FS #13

N. GENE L. JONES WAY, WEST WENDOVER, NV 89883

Job No: 22-002.00

Owner
CITY OF WEST WENDOVER

PHASE-1B DESIGN DEVELOPMENT

REVISIONS		
REV	DATE	DESCRIPTION

Sheet Title
GENERAL SHEET

Date: MAY 3, 2023
Sheet No:
G0.00

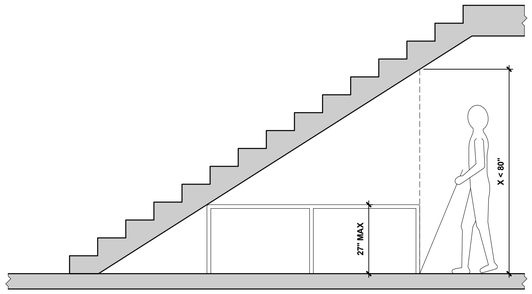

20 REDUCED VERTICAL CLEARANCE
SCALE: 1/2" = 1'-0"

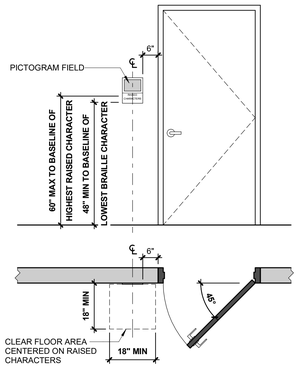

12 LOCATION OF SIGNS AT DOORS
SCALE: 1/2" = 1'-0"

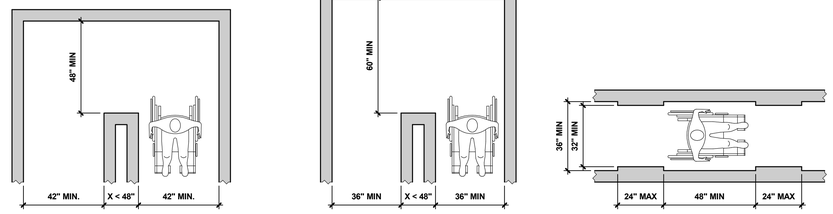

8 CLEAR WIDTH OF AN ACCESSIBLE ROUTE AND CLEAR WIDTH AT TURN
SCALE: 3/8" = 1'-0"

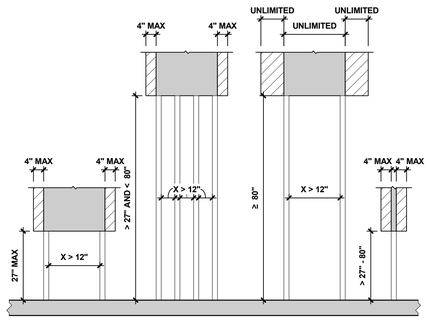

19 POST MOUNTED PROTRUDING OBJECTS
SCALE: 1/2" = 1'-0"

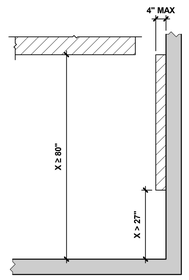

15 LIMITS OF PROTRUDING OBJECTS
SCALE: 1/2" = 1'-0"

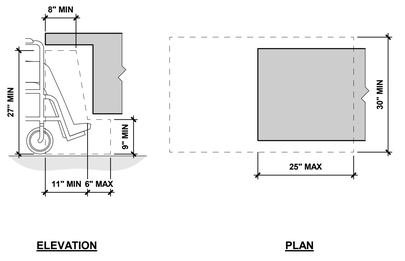

11 KNEE AND TOE CLEARANCE
SCALE: 3/4" = 1'-0"

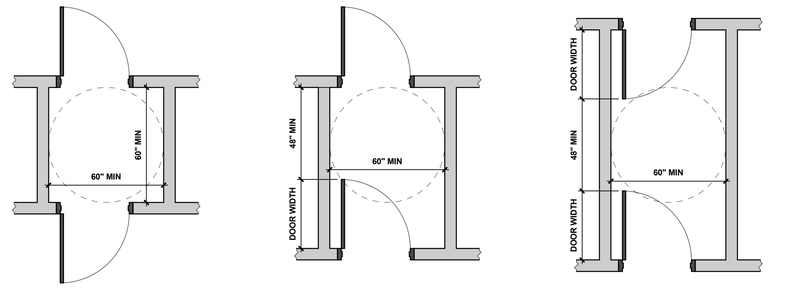

7 MANEUVERING CLEARANCE AT TWO DOORS IN SERIES
SCALE: 3/8" = 1'-0"

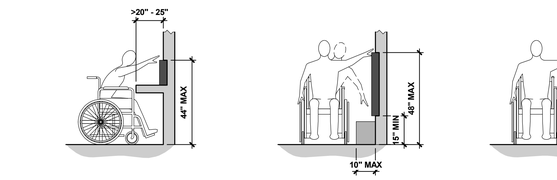

18 REACH RANGES
SCALE: 3/8" = 1'-0"

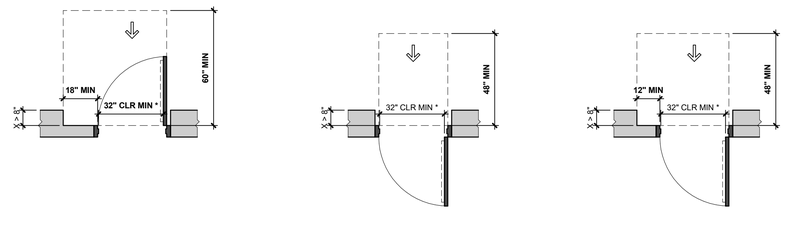

NOTES:
* CLEAR WIDTH SHALL COMPLY WITH LOCAL CODE AMENDMENT REQUIREMENTS

6 MANEUVERING CLEARANCE AT RECESSED DOORS
SCALE: 3/8" = 1'-0"

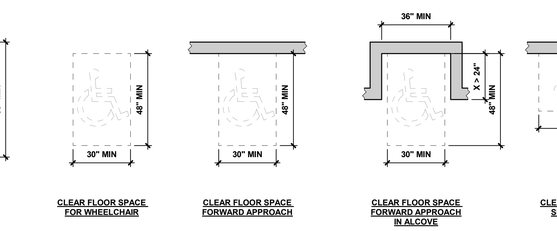

17 WHEELCHAIR TURNING SPACE
SCALE: 3/8" = 1'-0"

13 WHEELCHAIR CLEAR FLOOR SPACE
SCALE: 3/8" = 1'-0"

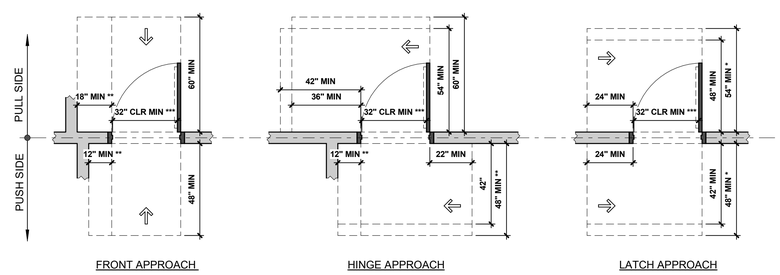

NOTES:
* IF CLOSER IS PROVIDED
** IF BOTH LATCH AND CLOSER ARE PROVIDED
*** CLEAR WIDTH SHALL COMPLY WITH LOCAL CODE AMENDMENT REQUIREMENTS

5 MANEUVERING CLEARANCE AT DOORS
SCALE: 3/8" = 1'-0"

tsk
314 South Water Street,
Suite 100
Henderson, NV 89015
phone: 702.456.3000
fax: 702.898.6209
www.tska.com

THESE DRAWINGS AND SPECIFICATIONS ARE THE PROPERTY OF TATE SNYDER KIMSEY ARCHITECTS AND MAY NOT BE REPRODUCED OR USED FOR ANY PURPOSE WITHOUT THE ARCHITECTS WRITTEN CONSENT. AS INSTRUMENTS OF SERVICE, THESE DOCUMENTS ARE NOT FINAL AND READY FOR USE, AND THEREFORE NOT VALID, UNLESS THEY ARE SEALED, SIGNED AND DATED.
Copyright, Ltd 2023

Consultant

PLEASE RECYCLE

Project
WEST WENDOVER NEW FS #13

N. GENE L. JONES WAY, WEST WENDOVER, NV 89883

Job No: 22-002.00

Owner
CITY OF WEST WENDOVER

PHASE-1B DESIGN DEVELOPMENT

REVISIONS		
REV	DATE	DESCRIPTION

Sheet Title
GENERAL ACCESSIBILITY DETAILS

Date: MAY 3, 2023
Sheet No:
G1.01

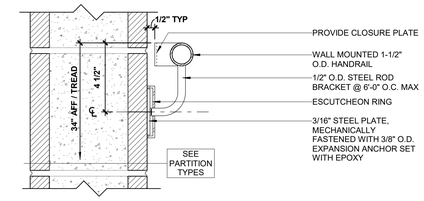

GENERAL NOTES:
1. ALL WELDS TO BE CONTINUOUS AND GROUND SMOOTH

12 WALL MOUNTED HANDRAIL - CMU WALL
SCALE: 3" = 1'-0"

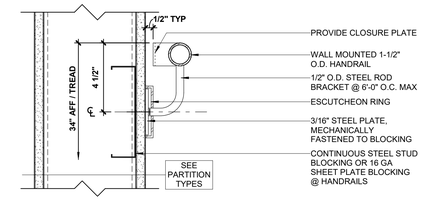

GENERAL NOTES:
1. ALL WELDS TO BE CONTINUOUS AND GROUND SMOOTH

8 WALL MOUNTED HANDRAIL - STUD WALL
SCALE: 3" = 1'-0"

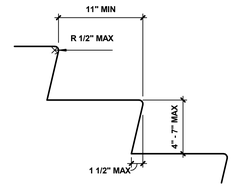

GENERAL NOTES:
1. ALL STEPS ON A FLIGHT OF STAIRS SHALL HAVE UNIFORM RISER HEIGHTS AND TREAD DEPTH
2. THE LEADING 2" OF TREAD SHALL HAVE VISUAL CONTRAST OF DARK-ON-LIGHT OR LIGHT-ON-DARK FROM THE REMAINDER OF THE TREAD

4 TREAD AND RISERS
SCALE: 1 1/2" = 1'-0"

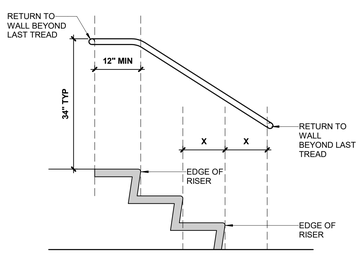

HANDRAIL EXTENSION AT STAIRS

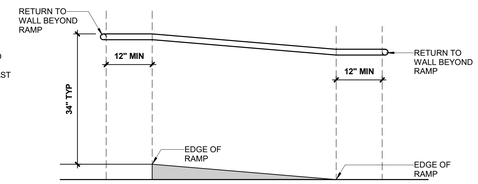

HANDRAIL EXTENSION AT RAMP

11 HANDRAIL EXTENSIONS
SCALE: 3/4" = 1'-0"

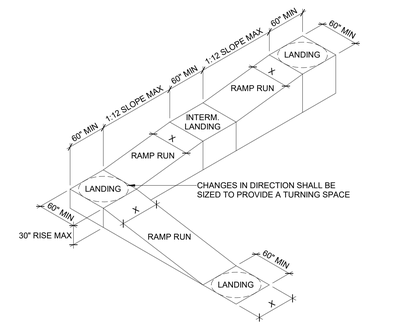

RAMP WITH TURNING PLATFORM



PERMITTED VERTICAL CHANGE

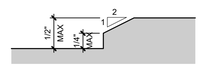

PERMITTED BEVELED CHANGE

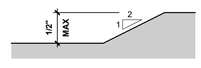

PERMITTED BEVELED CHANGE

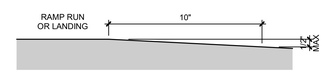

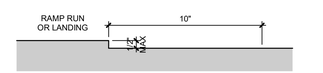

GENERAL NOTE:
1. EDGE PROTECTION SHALL NOT BE REQUIRED ON RAMPS OR LANDINGS HAVING A VERTICAL DROP-OFF OF 1/2" MAX WITHIN 10" HORIZONTALLY OF THE MINIMUM RAMP OR LANDING AREA.

10 CHANGES IN LEVEL
SCALE: 12" = 1'-0"

6 RAMP EDGE PROTECTION EXCEPTION
SCALE: 3" = 1'-0"

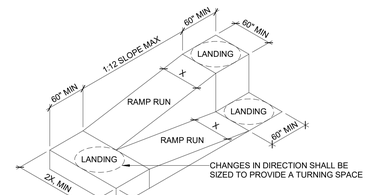

RAMP WITH INTERMEDIATE SWITCH-BACK PLATFORM

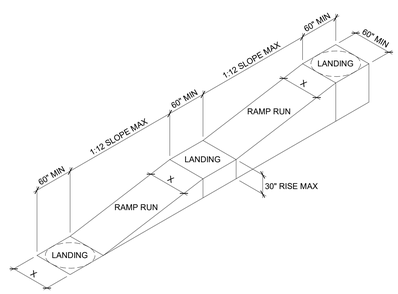

STRAIGHT RAMP

GENERAL NOTES:
1. ACCESSIBLE ROUTE WIDTH (SHOWN AS "X"), SHALL BE 36" MINIMUM
2. WHEN DOOR SWINGS ONTO LANDING, THE DOOR SWING SHALL NOT OVERLAP TURNING SPACE
3. RAMP RUNS WITH A RISE HIGHER THAN 6" SHALL HAVE HANDRAILS
4. EDGE PROTECTION SHALL BE PROVIDED ON EACH SIDE OF RAMP RUN AND LANDING

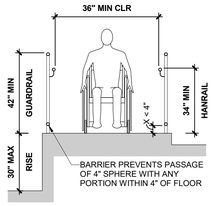

BARRIER EDGE PROTECTION

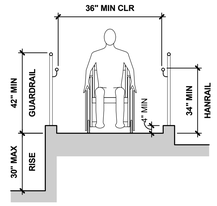

CURB EDGE PROTECTION

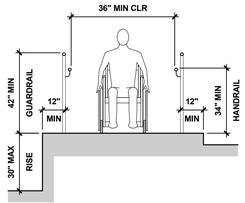

EXTENDED SURFACE EDGE PROTECTION

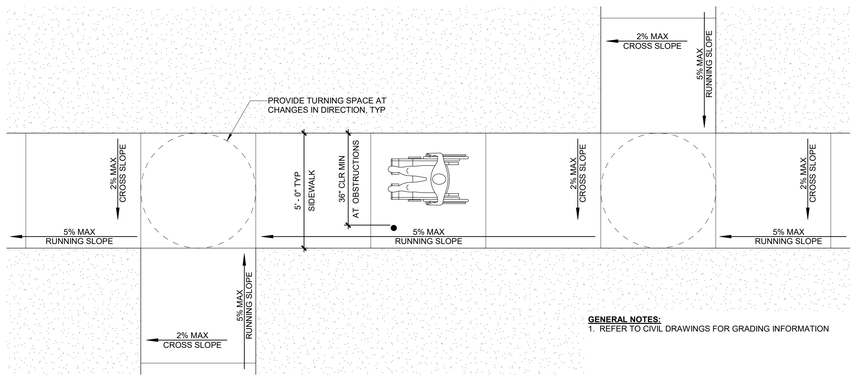

GENERAL NOTES:
1. REFER TO CIVIL DRAWINGS FOR GRADING INFORMATION

17 ACCESSIBLE ROUTE ON SITE
SCALE: 3/8" = 1'-0"

9 RAMP EDGE PROTECTION
SCALE: 3/8" = 1'-0"

1 RAMP DETAILS
SCALE: 1/8" = 1'-0"

tsk
314 South Water Street,
Suite 100
Henderson, NV 89015
phone: 702.456.3000
fax: 702.898.6209
www.tska.com

THESE DRAWINGS AND SPECIFICATIONS ARE THE PROPERTY OF TATE SNYDER KIMSEY ARCHITECTS AND MAY NOT BE REPRODUCED OR USED FOR ANY PURPOSE WITHOUT THE ARCHITECTS WRITTEN CONSENT. AS INSTRUMENTS OF SERVICE, THESE DOCUMENTS ARE NOT FINAL AND READY FOR USE, AND THEREFORE NOT VALID, UNLESS THEY ARE SEALED, SIGNED AND DATED.
Copyright, Ltd 2023

Consultant

PLEASE RECYCLE

Project
WEST WENDOVER NEW FS #13

N. GENE L. JONES WAY, WEST WENDOVER, NV 89883

Job No: 22-002.00

Owner
CITY OF WEST WENDOVER

PHASE-1B DESIGN DEVELOPMENT

REVISIONS		
REV	DATE	DESCRIPTION

Sheet Title
GENERAL ACCESSIBILITY DETAILS

Date: MAY 3, 2023
Sheet No:
G1.02

DESIGN CRITERIA FOR ACCESSIBLE RESTROOMS

NOTE:
ALL HEIGHT DIMENSIONS ARE TO THE HIGHEST OPERATING CONTROL, INCLUDING COIN SLOT.
THIS INCLUDES ALL ACCESSORIES.

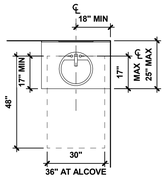

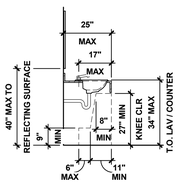

LAVATORY

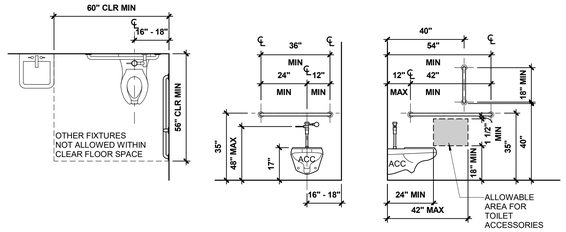

TOILET

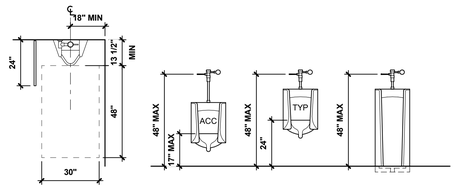

URINAL

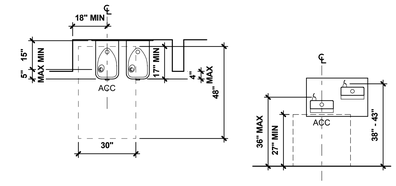

DRINKING FOUNTAIN

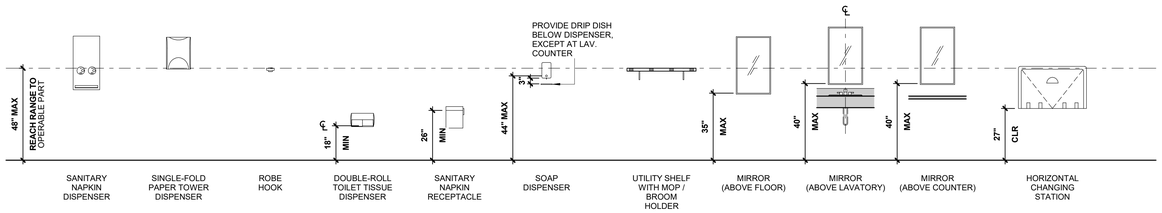

RESTROOM ACCESSORIES (ADULT)

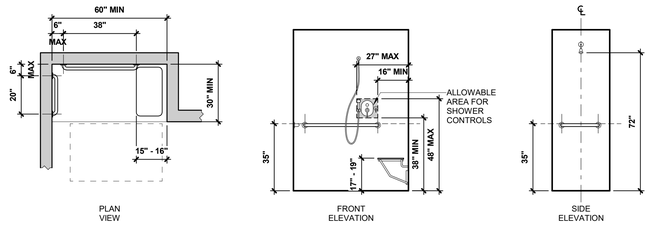

STANDARD ROLL-IN-TYPE SHOWER COMPARTMENT

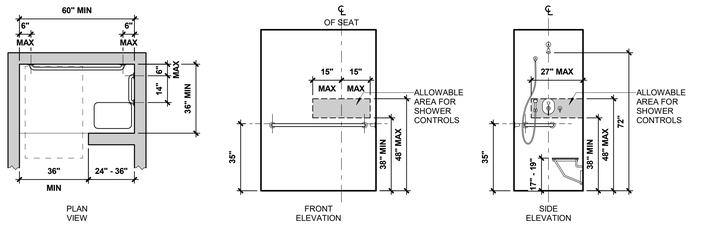

ALTERNATE ROLL-IN-TYPE SHOWER COMPARTMENT

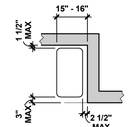

SHOWER COMPARTMENT SEAT

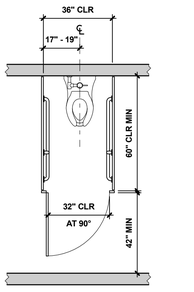

AMBULATORY STALL

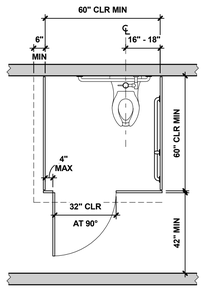

ACCESSIBLE STALL

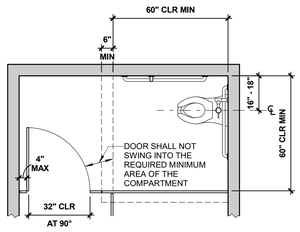

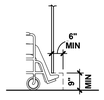

TOE CLEARANCE

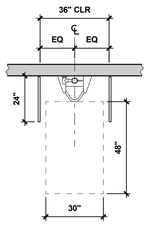

URINAL

18 TYPICAL FIXTURE AND ACCESSORY ELEVATIONS

SCALE: 3/8" = 1'-0"

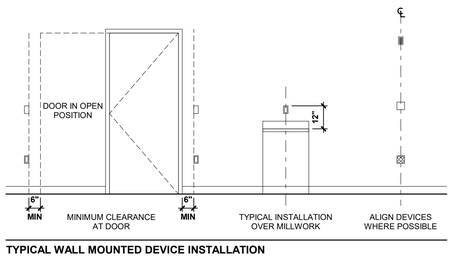

TYPICAL WALL MOUNTED DEVICE INSTALLATION

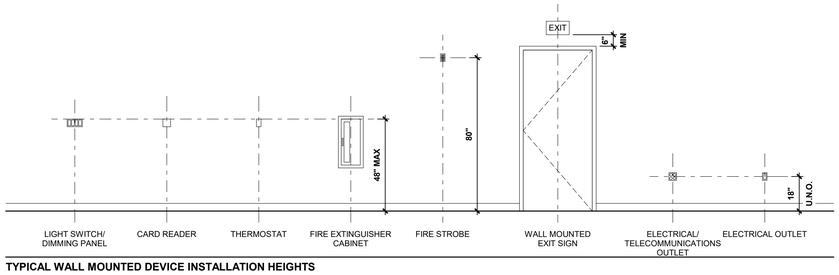

TYPICAL WALL MOUNTED DEVICE INSTALLATION HEIGHTS

17 WALL MOUNTED DEVICES - TYPICAL MOUNTING HEIGHTS

SCALE: 3/8" = 1'-0"

tsk
314 South Water Street,
Suite 100
Henderson, NV 89015
phone: 702.456.3000
fax: 702.898.6209
www.tska.com

THESE DRAWINGS AND SPECIFICATIONS ARE THE PROPERTY OF TATE SNYDER KIMSEY ARCHITECTS AND MAY NOT BE REPRODUCED OR USED FOR ANY PURPOSE WITHOUT THE ARCHITECTS WRITTEN CONSENT. AS INSTRUMENTS OF SERVICE, THESE DOCUMENTS ARE NOT FINAL AND READY FOR USE, AND THEREFORE NOT VALID, UNLESS THEY ARE SEALED, SIGNED AND DATED.

Copyright, Ltd 2023

Consultant

PLEASE RECYCLE

Project

WEST WENDOVER NEW FS #13

N. GENE L. JONES WAY, WEST WENDOVER, NV 89883

Job No: 22-002.00

Owner

CITY OF WEST WENDOVER

PHASE-1B DESIGN DEVELOPMENT

REVISIONS

REV	DATE	DESCRIPTION

Sheet Title

GENERAL ACCESSIBILITY DETAILS

Date: MAY 3, 2023

Sheet No:

G1.03

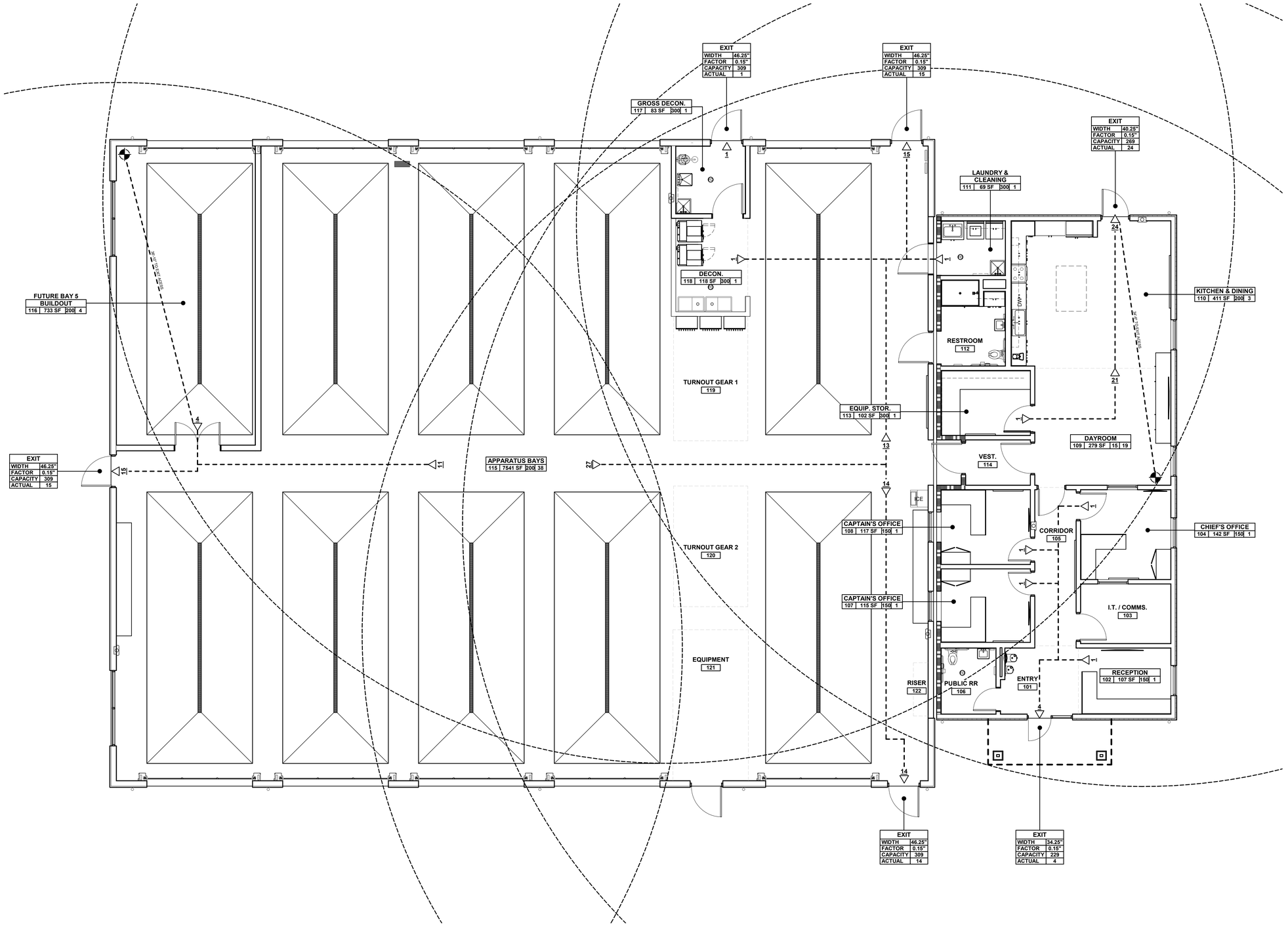

1 LIFE SAFETY PLAN
SCALE: 3/16" = 1'-0"

GENERAL NOTES

1. PER 2018 IBC SECTION 703.7: FIRE WALLS, FIRE BARRIERS, FIRE PARTITIONS, SMOKE BARRIERS, AND SMOKE PARTITIONS OR ANY OTHER WALL REQUIRED TO HAVE PROTECTED OPENINGS OR PENETRATIONS SHALL BE EFFECTIVELY AND PERMANENTLY IDENTIFIED WITH SIGNS OR STENCILING. SUCH IDENTIFICATION SHALL: (1) BE LOCATED IN ACCESSIBLE CONCEALED FLOOR, FLOOR-CEILING, OR ATTIC SPACES; (2) BE LOCATED WITHIN 15' OF THE END OF EACH WALL AND AT INTERVALS NOT EXCEEDING 30' MEASURED HORIZONTALLY ALONG THE WALL OR PARTITION; AND (3) INCLUDE LETTERING NOT LESS THAN 3" IN HEIGHT WITH A MINIMUM 3/8" STROKE IN A CONTRASTING COLOR INCORPORATING THE SUGGESTED WORDING: "FIRE AND/OR SMOKE BARRIER - PROTECT ALL OPENINGS" OR OTHER WORDING
2. FOR CLARITY PURPOSES; HALLWAYS, RESTROOMS, ACCESSORY SPACES, AND ALL OTHER SPACES WITH NO OCCUPANT LOAD ARE NOT LABELED.
3. ELECTRICAL ROOMS TO HAVE 1HR FIRE RATED WALLS, UNLESS NOTED OTHERWISE.
4. BUILDING IS FULLY SPRINKLERED, AND HAS AUDIBLE AND VISUAL FIRE ALARM SYSTEM THROUGHOUT.

KEYNOTES

LEGEND

ROOM NAME
1001 15,250 SF 15 888
- ROOM NAME
- OCCUPANT LOAD
- OCCUPANT LOAD FACTOR
- AREA
- ROOM NUMBER

1 HR RATED PARTITION
2 HR RATED PARTITION
PATH OF EGRESS TO EXIS DISCHARGE
POINT AT WHICH 2 EXIT PATHS BECOME AVAILABLE
42 EXIT DIRECTION AND NUMBER OF OCCUPANTS
MOST REMOTE POINT FOR TRAVEL DISTANCE
FIRE EXTINGUISHER CABINET. SEE LIFE SAFETY DETAILS AE2.XX
X OCCUPANCY
X OCCUPANCY
X OCCUPANCY

tsk
314 South Water Street,
Suite 100
Henderson, NV 89015
phone: 702.456.3000
fax: 702.898.6209
www.tska.com

THESE DRAWINGS AND SPECIFICATIONS ARE THE PROPERTY OF TATE SNYDER KIMSEY ARCHITECTS AND MAY NOT BE REPRODUCED OR USED FOR ANY PURPOSE WITHOUT THE ARCHITECTS WRITTEN CONSENT. AS INSTRUMENTS OF SERVICE, THESE DOCUMENTS ARE NOT FINAL AND READY FOR USE, AND THEREFORE NOT VALID, UNLESS THEY ARE SEALED, SIGNED AND DATED.
Copyright, Ltd 2023

Consultant

PLEASE RECYCLE

Project
WEST WENDOVER NEW FS #13

N. GENE L. JONES WAY, WEST WENDOVER, NV 89883

Job No: 22-002.00

Owner
CITY OF WEST WENDOVER

PHASE-1B DESIGN DEVELOPMENT

REVISIONS		
REV	DATE	DESCRIPTION

Sheet Title
LIFE SAFETY PLAN

Date: MAY 3, 2023
Sheet No:
AE1.01

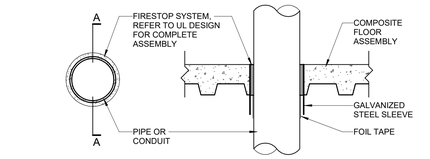

SECTION A-A

UL DESIGN NO.: F-A-2201
ASSEMBLY RATING: (2 HOUR)

12 FIRESTOP SYSTEMS (2 HOUR)
SCALE: 1 1/2" = 1'-0"

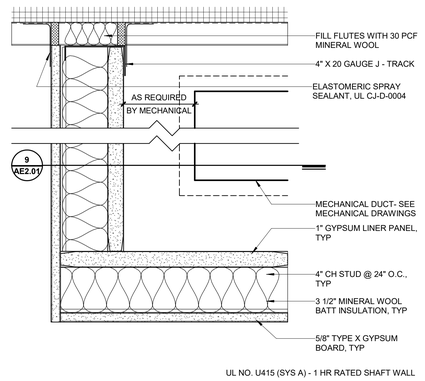

UL NO. U415 (SYS A) - 1 HR RATED SHAFT WALL

8 1HR RATED DUCT ENCLOSURE SECTION
SCALE: 3" = 1'-0"

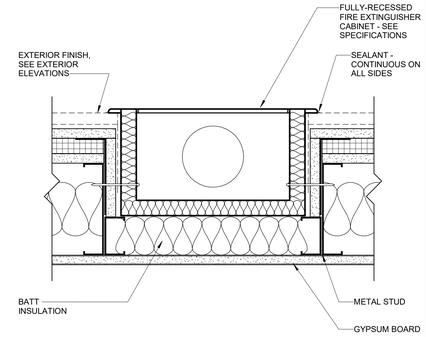

4 FULLY RECESSED FEC - EXTERIOR WALL
SCALE: 3" = 1'-0"

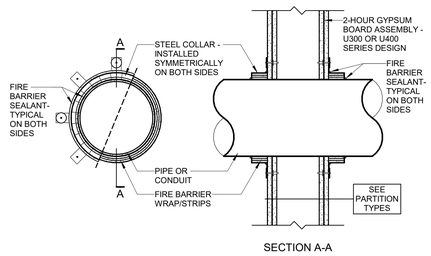

SECTION A-A

UL DESIGN NO.: W-L-1002
ASSEMBLY RATING: (1 & 2 HOUR)

11 FIRESTOP SYSTEMS_WALL PENETRATION 02
SCALE: 1 1/2" = 1'-0"

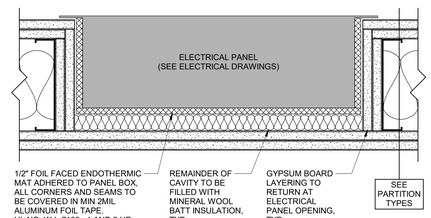

7 ELECTRICAL PANEL DETAIL
SCALE: 3" = 1'-0"

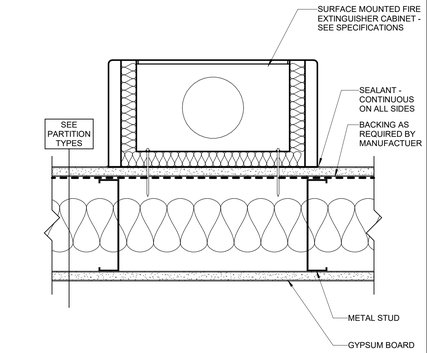

3 SURFACE MOUNTED FEC - METAL STUD WALL
SCALE: 3" = 1'-0"

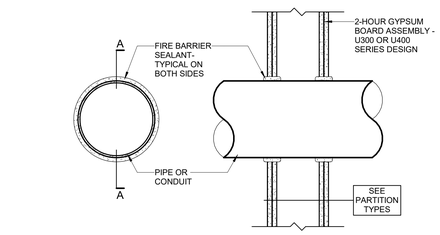

SECTION A-A

UL DESIGN NO.: W-L-1001
ASSEMBLY RATING: (1 & 2 HOUR)

10 FIRESTOP SYSTEMS (1 & 2 HOUR WALLS)
SCALE: 1 1/2" = 1'-0"

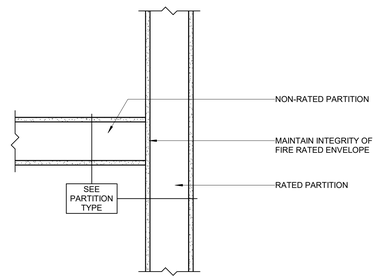

6 TYP. RATED/NON-RATED WALL CONNECTION
SCALE: 1 1/2" = 1'-0"

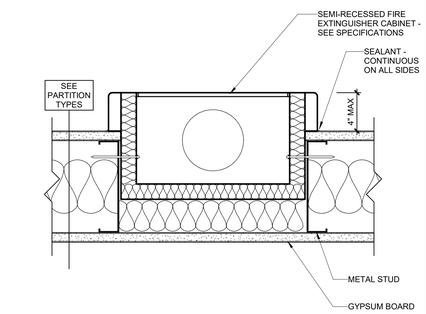

2 SEMI-RECESSED FEC - METAL STUD WALL
SCALE: 3" = 1'-0"

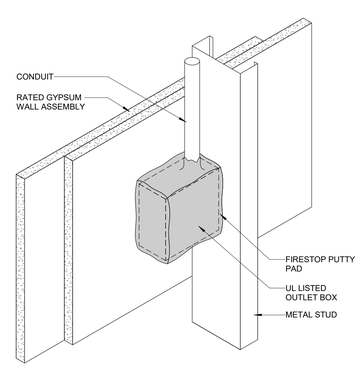

13 OUTLET BOX IN RATED WALL ASSEMBLY
SCALE: 3" = 1'-0"

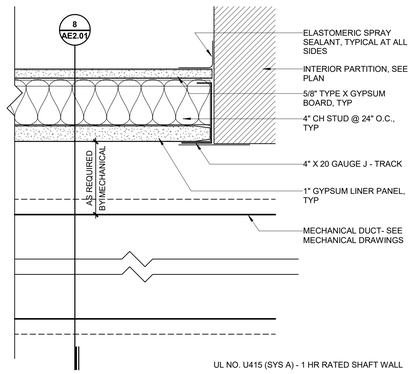

UL NO. U415 (SYS A) - 1 HR RATED SHAFT WALL

9 1HR RATED DUCT ENCLOSURE DETAIL
SCALE: 3" = 1'-0"

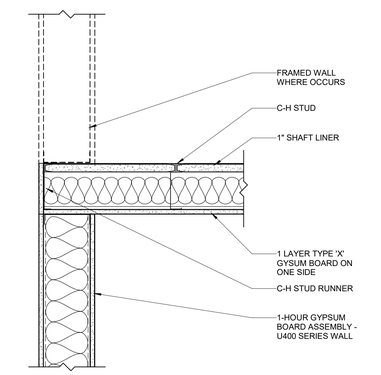

5 1-HOUR WALL TO 1-HOUR CEILING ENCLOSURE
SCALE: 1 1/2" = 1'-0"

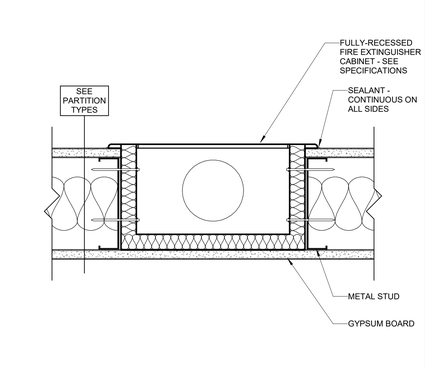

1 FULLY RECESSED FEC - METAL STUD WALL
SCALE: 3" = 1'-0"

tsk
314 South Water Street,
Suite 100
Henderson, NV 89015
phone: 702.456.3000
fax: 702.898.6209
www.tska.com

THESE DRAWINGS AND SPECIFICATIONS ARE THE PROPERTY OF TATE SNYDER KIMSEY ARCHITECTS AND MAY NOT BE REPRODUCED OR USED FOR ANY PURPOSE WITHOUT THE ARCHITECTS WRITTEN CONSENT. AS INSTRUMENTS OF SERVICE, THESE DOCUMENTS ARE NOT FINAL AND READY FOR USE, AND THEREFORE NOT VALID, UNLESS THEY ARE SEALED, SIGNED AND DATED.

Copyright, Ltd 2023

Consultant

PLEASE RECYCLE

Project
WEST WENDOVER NEW FS #13

N. GENE L. JONES WAY, WEST WENDOVER, NV 89883

Job No: 22-002.00

Owner
CITY OF WEST WENDOVER

PHASE-1B DESIGN DEVELOPMENT

REVISIONS		
REV	DATE	DESCRIPTION

Sheet Title
LIFE SAFETY DETAILS

Date: MAY 3, 2023
Sheet No:
AE2.01

OWNER

CHRIS J. MELVILLE
CITY MANAGER
775-664-3081

1111 N GENE L. JONES WAY,
WEST WENDOVER, NV, 89883

CIVIL IMPROVEMENTS PLANS FOR CITY OF WEST WENDOVER FIRE STATION WEST WENDOVER, NEVADA

WEST WENDOVER ELKO COUNTY NEVADA

ENGINEER

SUMMIT ENGINEERING CORPORATION

1150 LAMOILLE HIGHWAY
ELKO, NEVADA 89801
(775) 738 - 8058

WWW.SUMMITNV.COM

NITIN I. BHAKTA NITIN@SUMMITNV.COM

PROJECT DATA

SITE PLAN INFORMATION:

CURRENT ZONING: PQP

APN: 010-740-212

SITE AREA: 1.26 ACRES
TOTAL AREA: 55,110 SQ.

SITE ADDRESS: 1111 N GENE L. JONES WAY,
WEST WENDOVER, NV, 89883

BASIS OF BEARINGS

IS THIS MAP IS THE NEVADA STATE PLANE COORDINATE SYSTEM, NAD 83/94 USING ELKO CITY ENGINEERING DEPARTMENT CONTROL POINTS "5029" AND "5027", WITH A BEARING OF SOUTH 87°37'53" EAST. THIS SURVEY WAS CONDUCTED IN GROUND COORDINATES, USING A GROUND SCALE FACTOR OF 1.000357

BASIS OF ELEVATION

NORTH AMERICAN VERTICAL DATUM OF 1988 (NAVD88)
CITY OF ELKO CONTROL POINT: 5000 "CP SUMMIT"
NAVD88 ELEVATION: 1551.80 METERS (5091.21 FEET)

ABBREVIATIONS

A.C.	.....	ASPHALTIC CONCRETE	M.D.D	.....	MAXIMUM DRY DENSITY
AGG.	.....	AGGREGATE	LT.	.....	LEFT
B.C.	.....	BEGIN CURVE	L.P.	.....	LOW POINT
B.F.	.....	BOTTOM OF FOOTING	M.H.	.....	MANHOLE
B.V.C.	.....	BEGIN VERTICAL CURVE	P.	.....	PAD ELEVATION
B.W.	.....	BACK OF SIDEWALK	PCC	.....	POINT OF COMPOUND CURV.
C.B.	.....	CATCH BASIN	PI.	.....	POINT OF INTERSECTION
℄	.....	CENTERLINE	P.R.C.	.....	POINT OF REVERSE CURVATURE
CONC.	.....	CONCRETE	P.V.C.	.....	POLYVINYL CHLORIDE PIPE
CONST.	.....	CONSTRUCT	P.O.	.....	PUSH ON
CLR	.....	CLEARANCE	P.U.E.	.....	PUBLIC UTILITY EASEMENT
C.P.	.....	CONCRETE PIPE	℄	.....	PROPERTY LINE
C.R.	.....	CURB RETURN	Q10	.....	10-YEAR STORM FLOW
D.I.	.....	DROP INLET	Q100	.....	100-YEAR STORM FLOW
DET.	.....	DETAIL	(R)	.....	RADIAL
E.	.....	ELECTRICAL	R	.....	RADIUS
ELEV.	.....	ELEVATION	REF.	.....	REFERENCE
E.C.	.....	END OF CURVE	R.C.P.	.....	REINFORCED CONCRETE PIPE
E.V.C.	.....	END OF VERTICAL CURVE	R.P.	.....	RADIUS POINT
EXIST.	.....	EXISTING	RT.	.....	RIGHT
(e)	.....	EXISTING	R/W	.....	RIGHT OF WAY
E.G.	.....	EXISTING GRADE	S	.....	SLOPE
F.F.	.....	FINISHED FLOOR	S.G.	.....	SUBGRADE
F.F.C.	.....	FRONT FACE OF CURB	S.S.	.....	SANITARY SEWER
F.G.	.....	FINISHED GRADE	S.W.	.....	SIDEWALK
F.H.	.....	FIRE HYDRANT	STD.	.....	STANDARD
℄	.....	FLOW LINE	SHT.	.....	SHEET
FLG.	.....	FLANGE	STA.	.....	STATION
G.	.....	GAS	S.D.	.....	STORM DRAIN
G.B.	.....	GRADE BREAK	T	.....	TANGENT
GTV.	.....	GATE VALVE	TELE.	.....	TELEPHONE
H.C.	.....	HANDICAPPED	T.C.	.....	TOP OF CURB
HORIZ.	.....	HORIZONTAL	T.B.	.....	THRUST BLOCK
H.P.	.....	HIGH POINT	TOE	.....	TOE OF SLOPE
INT.	.....	INTERSECTION	TOP	.....	TOP OF SLOPE
I.E.	.....	INVERT ELEVATION	TYP.	.....	TYPICAL
L	.....	LENGTH	V.C.	.....	VERTICAL CURVE
L.F.	.....	LINEAL FEET	V.P.I.	.....	VERT. POINT OF INTERSECTION
L.P.	.....	LOW POINT	W	.....	WATER
			△	.....	CURVE DELTA

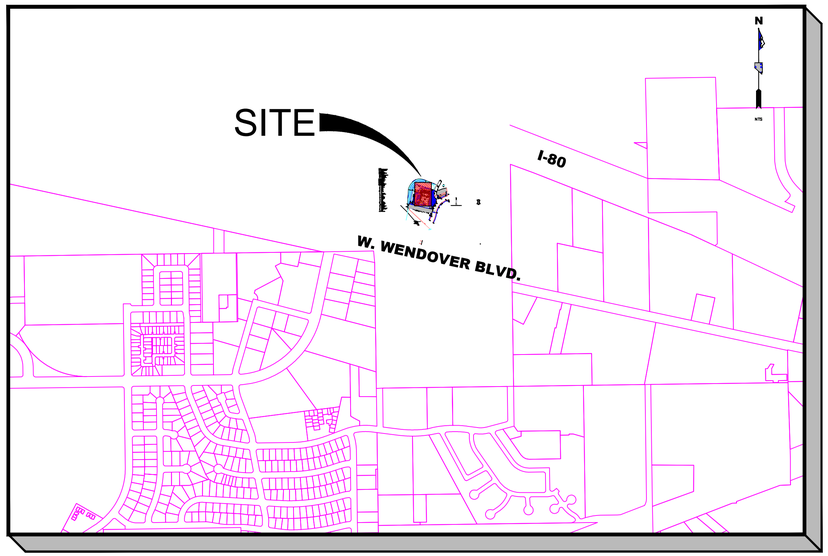

VICINITY MAP

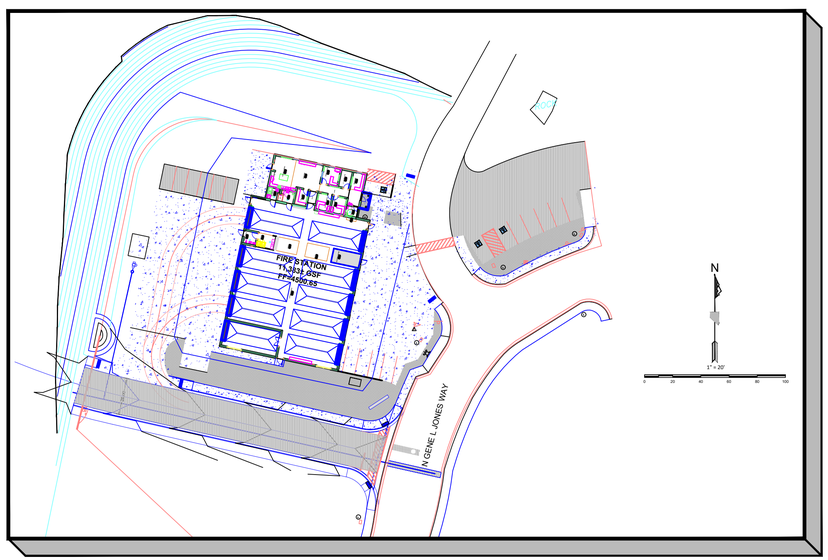

SITE PLAN

SHEET INDEX

C-1 ..... TITLE SHEET
C-2 ..... GENERAL NOTES SHEET
C-3 ..... SITE PLAN
C-4 ..... GRADING PLAN
C-5 ..... UTILITY PLAN
C-6 ..... PARKING & PAVING PLAN
C-7 ..... DETAIL SHEET

60% CIVIL SET
NOT FOR
CONSTRUCTION

LAND USE CLASSIFICATION

PQP (PUBLIC-QUASI-PUBLIC)

FLOOD PLAIN: BASED ON THE FLOOD INSURANCE RATE MAP FOR THE CITY OF WEST WENDOVER, 32007C8402E, DATED SEPTEMBER 4, 2013 A PORTION OF THE SITE DOES LIE WITHIN THE 100 YEAR FLOOD PLAIN

SITE INFO: BASED UPON THE CITY OF WEST WENDOVER AND BLM HISTORIC DATA THE SUBJECT PROPERTY HAS BEEN EXCLUSIVELY USED AS OPEN RANGE, VACANT LAND.

LOCATION: THIS SITE IS LOCATED WITHIN SECTION 29, TOWNSHIP 36 NORTH RANGE 70 EAST IN WEST WENDOVER, NEVADA

ADJACENT ZONING: NORTH - EXISTING VACANT LAND / I-80 RIGHT-OF-WAY
SOUTH - EXISTING - WENDOVER AVE.
EAST - EXISTING COMMERCIAL DEVELOPMENT
WEST - EXISTING COMMERCIAL / RESIDENTIAL DEVELOPMENT

UTILITIES

ELECTRIC	~	NV ENERGY
CABLE	~	ZITO MEDIA
TELEPHONE	~	FRONTIER COMMUNICATION
GAS	~	SOUTHWEST GAS CORPORATION
WATER	~	CITY OF WEST WENDOVER
SANITARY SEWER	~	CITY OF WEST WENDOVER
GARBAGE UTILITIES	~	WEST WENDOVER SANITATION (CITY LANDFILL)

SPECIFICATIONS

ALL CONSTRUCTION SHALL CONFORM TO THE STANDARD SPECIFICATIONS FOR PUBLIC WORKS CONSTRUCTION (CURRENT EDITION AND ANY APPURTENANT SUPPLEMENTS) SPONSORED AND DISTRIBUTED BY RENO, SPARKS, WASHOE COUNTY, AND THE RECOMMENDATIONS ESTABLISHED BY THE SOILS INVESTIGATION FOR THIS SITE.

ENGINEER'S STATEMENT

THESE PLANS (SHEETS C-1 OF 4 THROUGH C-4 OF 4 HAVE BEEN PREPARED IN ACCORDANCE WITH ACCEPTED ENGINEERING PROCEDURES AND GUIDELINES, AND ARE IN SUBSTANTIAL COMPLIANCE WITH APPLICABLE STATUTES, CITY ORDINANCES, AND CODES. IN THE EVENT OF CONFLICT BETWEEN ANY PORTION OF THESE PLANS AND CITY CODES, THE CITY CODES SHALL PREVAIL.

SUMMIT ENGINEERING CORPORATION
1150 LAMOILLE HIGHWAY, ELKO, NV, 89801
PHONE:(775) 738-8058 FAX:(775) 747-8559

Copyright SUMMIT ENG 2022

REV.	DATE	DESCRIPTION	BY	APP'D
1			SA	NIB

CIVIL IMPROVEMENT PLANS FOR
CITY OF WEST WENDOVER ~ FIRE STATION
TITLE SHEET
WENDOVER ELKO COUNTY NEVADA

DESIGNED BY: NIB
CHECKED BY: NIB
SCALE
HORIZ: NONE
VERT:
JOB NO: 3-82965

SHEET C-1 OF 7

N:\DWGS\82965_WWendoverFireSta\Civil\WWendoverFireStaSitaMap.DWG ~ 9:57 AM * 08-NOV-2022

LEGEND

- SD 12" — PROPOSED STORM DRAIN / SANITARY SEWER W/SIZE & DIRECTION INDICATOR
- SD 12" — EXISTING STORM DRAIN/SANITARY SEWER W/SIZE & DIRECTION INDICATOR
- SEWER LATERAL
- AC PAVEMENT AREA
- CONCRETE AREA (4000 PSI)
- TYPE 2 BASE GRAVEL AREA (95% MDD)
- EXISTING AC PAVEMENT
- GRADE BREAK
- 53.96 FC — PROPOSED ELEV. @ FRONT FACE TOP OF CURB
- 52.45 GB — PROPOSED ELEV. @ GRADE BREAK
- 51.27 HP — PROPOSED ELEV. @ HIGH PT.
- 51.86 FL — PROPOSED ELEV. @ FLOW LINE
- 51.25 FG — PROPOSED ELEV. @ FINISHED GRADE
- 4900 — EXISTING CONTOUR LINE
- 4900 — PROPOSED CONTOUR LINE
- ACCESSIBLE RAMP
- DRAINAGE SWALE FLOW LINE
- CUT OR FILL SLOPE
- SD — EXISTING STORM DRAIN
- GAS — EXISTING GAS
- PROPOSED FENCE
- TELE — EXISTING TELEPHONE
- OE — EXISTING ELECTRIC OVERHEAD LINE
- W — EXISTING WATERLINE
- SS — EXISTING SANITARY SEWER
- BACKFLOW PREVENTOR
- CHECK VALVE
- CHECK VALVE–DOUBLE
- FLUSH VALVE
- METER–DUAL
- METER–SINGLE
- REDUCER
- SERVICE–DUAL
- SERVICE–SINGLE
- TEE
- VALVE
- E — EX ELECTRIC VAULT/BOX
- EXISTING TEELPHONE/FIBER LINE
- EXISTING LIGHT
- EXISTING SIGN
- PROPOSED SIGN
- PROPOSED SS CLEANOUT
- EXISTING FIRE HYDRANT
- CAP W/ THRUST BLOCK
- 11.25° ELBOW
- 22.5° ELBOW
- 45° ELBOW
- 90° ELBOW
- ELECTRIC PULL BOX
- PROPOSED FIRE HYDRANT
- PROPOSED WTR METER VAULT
- EXISTING STREET LIGHT
- TYPE 7 STREET LIGHT
- PROPOSED MONUMENT
- WV — WATER VALVE (HOLLOW IF EXISTING)
- EXISTING GAS VALVE/MAIN
- EXISTING METER PIT
- SS & SD MANHOLE (HOLLOW IF EXISTING)
- CATCH BASIN (HOLLOW IF EXISTING)
- FIRE SERVICE
- GUY WIRE
- RIPRAP EROSION CONTROL

GENERAL NOTES

1. THE CONTRACTOR SHALL VERIFY IN THE FIELD, ALL ELEVATIONS, DIMENSIONS, FLOW LINES, EXISTING CONDITIONS, AND POINTS OF CONNECTIONS WITH ADJOINING PROPERTY (PUBLIC OR PRIVATE), ANY DISCREPANCIES SHALL BE CALLED TO THE ATTENTION OF THE PROJECT ENGINEER BEFORE PROCEEDING WITH THE WORK.
2. THE CONTRACTOR SHALL KEEP A REDLINE SET OF AS–BUILTS PLANS ON–SITE AND WORK WITH THE PROJECT ENGINEER AT COMPLETION TO ENSURE ACCURATE AS–BUILT DRAWINGS CAN BE GENERATED AND SUBMITTED TO THE CITY OF WEST WENDOVER AND THE OWNER BY THE PROJECT ENGINEER.
3. THE CONTRACTOR SHALL NOTIFY THE PROJECT ENGINEER, THE SOILS ENGINEER, THE CITY OF WEST WENDOVER, AND ALL UTILITY COMPANIES 48 HOURS PRIOR TO COMMENCEMENT OF WORK.
4. THE CONTRACTOR SHALL BE RESPONSIBLE FOR ANY AND ALL DAMAGE TO THE EXISTING UTILITIES ENCOUNTERED DURING CONSTRUCTION. IT SHALL BE THE CONTRACTOR'S RESPONSIBILITY TO CONTACT THE UTILITY COMPANIES FOR LOCATIONS PRIOR TO CONSTRUCTION. HORIZONTAL AND VERTICAL LOCATIONS OF EXISTING UTILITIES ARE APPROXIMATE ONLY. THE CONTRACTOR SHALL CALL UNDERGROUND SERVICES ALERT AT 1.800.227.2600 AT LEAST 48 HOURS PRIOR TO EXCAVATION.
5. ALL UTILITY TRENCHES SHALL CONFORM TO SIERRA PACIFIC POWER, ZITO MEDIA, FRONTIER COMMUNICATIONS, AND SOUTHWEST GAS SPECIFICATIONS. CONTRACTOR TO COORDINATE INSTALLATION OF ALLUTILITY TRENCHES WITH LOCAL UTILITIES.
6. CONTRACTOR TO OBTAIN AND PAY FOR PERMITS FROM THE CITY OF WEST WENDOVER PRIOR TO EXCAVATING WITHIN THE CITY RIGHT–OF–WAY.
7. AT ALL POINTS WHERE SEWER (SANITARY OR STORM), WATER MAINS AND LATERALS CROSS, VERTICAL AND HORIZONTAL SEPARATION SHALL BE MAINTAINED PER NAC. ENGINEER AND CONTRACTOR TO REFERENCE SECTION 445A.6715 TO SECTION 445A.6718 OF THE NEVADA ADMINISTRATIVE CODE FOR UTILITY SEPARATION AND CLEARANCES.
8. ALL SANITARY SEWER MAINS SHALL BE A MIN. OF 8" SDR 35 PVC (GREEN) PIPE. ALL RESIDENTIAL SANITARY SEWER LATERALS SHALL BE A MIN. 4" SDR 35 PVC PIPE WITH A 2% SLOPE MINIMUM UNLESS OTHERWISE SHOWN.
9. ALL WATER MAINS SHALL BE MIN. OF 8" THICK CLASS 50 OR PRESSURE CLASS 350 DUCTILE IRON PIPE WITH POLYETHYLENE ENCASEMENT WRAPPED IN (8 MIL VISQUEEN) OR DR 18 C900 PIPE UNLESS OTHERWISE SHOWN. ALL 4"/6" FIRE SPRINKLER LINES SHALL BE DIP OR DR 18 C900 PIPE.
10. ALL CONSTRUCTION SHALL CONFORM TO AWWA C–600. MINIMUM COVER OVER THE WATER MAIN SHALL BE 42" WITH TRACE WIRE AND WARNING TAPE.
11. THE CITY OF WEST WENDOVER UTILITY DEPARTMENT SHALL BE CONTACTED TO PERFORM ALL TAPS ONTO CITY OF WEST WENDOVER UTILITIES.
12. THE CITY OF WEST WENDOVER UTILITY DEPARTMENT SHALL BE CONTACTED FOR AUTHORIZATION TO PLACE ANY NEW WATER SYSTEMS, EXTENSIONS, REPLACEMENTS IN EXISTING SYSTEMS AND VALVED SECTIONS INTO SERVICE FOR TESTING OR FINAL ACCEPTANCE.
13. ALL WATER SERVICE LINES SHALL BE 2" IRON PIPE SIZE (IPS) RATED 200 PSI POLYETHYLENE DR11 UNLESS SHOWN OTHERWISE.
14. BEFORE BEING CERTIFIED BY AN ENGINEER OR ACCEPTED BY THE CITY OF WEST WENDOVER, ANY NEW WATER SYSTEMS, EXTENSIONS, REPLACEMENTS IN EXISTING SYSTEMS AND VALVED SECTIONS SHALL BE DISINFECTED IN ACCORDANCE WITH AWWA C–651, "DISINFECTING WATER MAINS".
15. BEFORE BEING CERTIFIED BY AN ENGINEER OR ACCEPTED BY THE CITY OF WEST WENDOVER, ANY NEW WATER SYSTEMS, EXTENSIONS, REPLACEMENTS IN EXISTING SYSTEMS AND VALVED SECTIONS SHALL BE PRESSURE TESTED IN ACCORDANCE WITH NAC445A.67145.7 (a) AND (b) AND INSPECTED BY THE CITY OF WEST WENDOVER.
16. GRADING AROUND BUILDINGS TO BE DONE IN A MANNER AS TO PROVIDE POSITIVE DRAINAGE AWAY FROM BUILDING IN ACCORDANCE WITH CITY OF WEST WENDOVER REQUIREMENTS.
17. LAND GRADING SHALL BE DONE IN A METHOD TO PREVENT DUST FROM TRAVERSING THE PROPERTY LINE.
18. WATER METERS SHALL BE INSTALLED DURING ANY DEVELOPMENT AND PRIOR TO THE ISSUANCE OF CERTIFICATE OF OCCUPANCY FOR THE BUILDING SHOWN OR SUBSEQUENT DIVISION OF THE PARCELS SHOWN. WATER AND SEWER THROUGHOUT THE DEVELOPMENT WILL BE DEDICATED TO THE CITY OF WEST WENDOVER UP TO THE WATER METER LOCATIONS. A BLANKET UTILITY EASEMENT SHALL BE GRANTED THROUGHOUT THE PARKING CORRIDOR.
19. ALL EXISTING UTILITY ADJUSTMENTS SHALL BE THE RESPONSIBILITY OF THE CONTRACTOR.
20. ALL EXISTING ASPHALT REMOVAL AND REPLACEMENT SHALL BE THE RESPONSIBILITY OF THE CONTRACTOR.
21. ADD 4000 FEET TO ALL SPOT ELEVATION.

EROSION CONTROL NOTES

1. ALL PUBLIC RIGHT OF WAYS LOCATED ADJACENT TO THE SITE (E.G. STREETS AND SIDEWALKS) MUST BE CLEANED DAILY OF ALL SEDIMENT OR WASTES THAT ORIGINATE FROM THE SITE.
2. BMPS IN ADDITION TO THOSE INDICATED IN THE STORM WATER POLLUTION PREVENTION PLAN (SWPPP) MAY BE REQUIRED IF THEY DO NOT MEET THE CITY OF WEST WENDOVER PERFORMANCE STANDARDS.
3. TEMPORARY OR PERMANENT STABILIZATION MUST BE APPLIED NO LATER THAN 14 DAYS TO ALL DISTURBED SOILS, INCLUDING STOCKPILES, WHERE CONSTRUCTION ACTIVITY HAS CEASED.
4. ALL BMPS MUST BE INSPECTED WEEKLY, PRIOR TO FORECASTED RAIN EVENTS, AND WITHIN 24 HOURS AFTER ANY EVENT THAT CREATES RUNOFF AT THE SITE.
5. ACCUMULATED SEDIMENT MUST BE REMOVED FROM BMP'S WHEN THE DESIGN CAPACITY HAS BEEN REDUCED BY 50 PERCENT OR MORE. SEDIMENT MUST ALSO BE REMOVED WITHIN SEVEN DAYS AFTER A RUNOFF EVENT OR PRIOR TO THE NEXT FORECASTED EVENT, WHICHEVER IS EARLIER.
6. ALL BEST MANAGEMENT PRACTICES (BMP'S) SHALL BE IN ACCORDANCE WITH THE "CITY OF WEST WENDOVER CONSTRUCTION SITE BEST MANAGEMENT PRACTICES HANDBOOK", DATED DECEMBER 2005, AND AVAILABLE THROUGH THE CITY OF WEST WENDOVER.
7. PRIOR TO THE START OF CONSTRUCTION, THE CONTRACTOR SHALL HAVE IN PLACE ALL NECESSARY BEST MANAGEMENT PRACTICES THAT SHALL BE USED TO MINIMIZE DUST, PREVENT EROSION, AND PREVENT POLLUTION LADEN RUNOFF FROM ENTERING THE ADJACENT STORM DRAIN FACILITIES. THE CONTRACTOR SHALL MAINTAIN, REPAIR, REPLACE, SUBSTITUTE, OR SUPPLEMENT BMP'S AT THE CONSTRUCTION SITE AS CONDITIONS WARRANT DURING CONSTRUCTION. BMP'S MAY INCLUDE, BUT NOT BE LIMITED TO, THE FOLLOWING BMP'S: (1) SILT FENCING OR STRAW WADDLES AT THE DOWNHILL LIMITS OF GRADING, (2) STABILIZED CONSTRUCTION SITE ENTRY/EXIT, (3) PERMANENT SLOPE RE–VEGETATION ON ALL DISTURBED AREAS, (4) INLET PROTECTION AT EXISTING CATCH BASINS, (5) STOCKPILE MANAGEMENT BMP'S, (6) DUST CONTROL BMP'S, (7) A CONCRETE WASHOUT AREA, AND (8) MEASURES TO PROTECT EXISTING NATIVE VEGETATION.

STORMWATER POLLUTION PREVENTION NOTES

1) THE CONTRACTOR AND/OR THEIR AUTHORIZED AGENTS SHALL EACH DAY REMOVE ALL SEDIMENT, MUD, CONSTRUCTION DEBRIS, OR OTHER POTENTIAL POLLUTANTS THAT MAY HAVE BEEN DISCHARGED TO, OR ACCUMULATE IN, THE PUBLIC RIGHTS OF WAYS OF THE CITY OF WEST WENDOVER AS A RESULT OF CONSTRUCTION ACTIVITIES ASSOCIATED WITH THIS SITE DEVELOPMENT OR CONSTRUCTION PROJECT. SUCH MATERIALS SHALL BE PREVENTED FROM ENTERING THE STORM WATER SYSTEM.

2) ADDITIONAL CONSTRUCTION SITE DISCHARGE BEST MANAGEMENT PRACTICES (BMP) MAY BE REQUIRED OF THE OWNER AND HIS OR HER AGENTS DUE TO UNFORESEEN EROSION PROBLEMS OR IF THE SUBMITTED PLAN DOES NOT MEET THE PERFORMANCE STANDARDS SPECIFIED IN THE CITY OF WEST WENDOVER CONSTRUCTION SITE BEST MANAGEMENT PRACTICES HANDBOOK.

3) TEMPORARY OR PERMANENT STABILIZATION PRACTICES WILL BE INSTALLED ON DISTURBED AREAS AS SOON AS PRACTICABLE AND NO LATER THAN 14 DAYS AFTER THE CONSTRUCTION ACTIVITY IN THAT PORTION OF THE SITE HAS TEMPORARILY OR PERMANENTLY CEASED. SOME EXCEPTIONS MAY APPLY; REFER TO STORM WATER GENERAL PERMIT NVS040000.

4) AT A MINIMUM, THE CONTRACTOR OR HIS AGENT SHALL INSPECT ALL DISTURBED AREAS, AREAS USED FOR STORAGE OF MATERIALS AND EQUIPMENT THAT ARE EXPOSED TO PRECIPITATION, VEHICLE ENTRANCE AND EXIT LOCATIONS AND ALL BMP's WEEKLY, PRIOR TO A FORECASTED RAIN EVENT AND WITHIN 24 HOURS AFTER ANY ACTUAL RAIN EVENT. THE CONTRACTOR OR HIS AGENT SHALL UPDATE OR MODIFY THE STORMWATER POLLUTION PLAN AS NECESSARY. SOME EXCEPTIONS TO WEEKLY INSPECTIONS MAY APPLY, SUCH AS FROZEN GROUND CONDITIONS OR SUSPENSION OF LAND DISTURBANCE ACTIVITIES. REFER TO STORMWATER GENERAL PERMIT SMALL MS4 NVS040000.

5) ACCUMULATED SEDIMENT IN BMP's SHALL BE REMOVED AT REGULAR INTERVALS, WITHIN SEVEN DAYS AFTER A STORMWATER RUNOFF EVENT, AND PRIOR TO THE NEXT ANTICIPATED STORM EVENT. SEDIMENT MUST BE REMOVED WHEN BMP DESIGN CAPACITY HAS BEEN REDUCED BY 50 PERCENT OR MORE.

6) REFER TO CITY OF WEST WENDOVER CONSTRUCTION SITE BEST MANAGEMENT PRACTICES HANDBOOK (PUBLISHED BY THE CITY OF WEST WENDOVER, DATED DEC. 2015) FOR DETAILS OF ALL BMP'S SHOWN ON THIS PLAN.

7) THE BMP'S SHOWN ON THIS PLAN ARE SCHEMATIC ONLY. FINAL BMP SELECTION AND LOCATION SHALL BE DETERMINED BY THE SITE OPERATOR OR THE OWNER'S REPRESENTATIVE.

8) THE CONTRACTOR SHALL SUBMIT TO THE NEVADA DEPARTMENT OF ENVIRONMENTAL PROTECTION (NDEP) FOR STORM WATER DISCHARGE PERMIT. THE CONTRACTOR SHALL SIGN THE NOTICE OF INTENT FOR THE PROPOSED PROJECT.

9) ALL EROSION CONTROL MEASURES SHALL CONFORM TO THE GUIDELINES OUTLINED IN THE CITY OF WEST WENDOVER CONSTRUCTION SITE BEST MANAGEMENT PRACTICE HANDBOOK 2005 EDITION. A COPY OF THIS MANUAL TO BE ON–SITE AT ALL TIMES.

10) ALL CONSTRUCTION SHALL CONFORM TO THE 2016 EDITION OF THE "STANDARD SPECIFICATION FOR PUBLIC WORKS CONSTRUCTION," CONTRACTOR TO KEEP A COPY OF THE SPECIFICATION ON THE JOB SITE AT ALL TIMES

SLOPE STABILIZATION

1) ALL DISTURBBED SLOPES STEEPER THAN 3:1 SHALL BE RIPRAPPED. RIPRAP SHALL BE RUN OF MINE OR UNSCREENED.

2) ALL SLOPES 3:1 OR LESS SHALL BE PLANTED AS FOLLOWS:

   a. HAND SPREAD ENTIRE SEEDED AREA.
   b. IRRIGATION IS TO MATCH THE AVAILABLE WATER HOLDING CAPACITY OF THE SOIL (AWC) FOR EACH SLOPE TAKING INTO ACCOUNT THE PLANT CONSUMPTIVE USE PLUS A FACTOR FOR IRRIGATION SYSTEM EFFICIENCY.
   c. PROVIDE TEMPORARY IRRIGATION UNTIL VEGETATION IS ESTABLISHED.

3) PROTECT EXISTING AND PROPOSED DRAINAGE INLETS DURING CONSTRUCTION IN ACCORDANCE WITH THE FOLLOWING DETAILS:

   a. STORMDRAIN INLET PROTECTION – (BMP DP–3)
   b. CATCH BASIN FILTERS (BMP– DP–4)

4) MAINTENANCE

   a. EXCLUDE FOOT TRAFFIC AS MUCH AS POSSIBLE DURING PLANT ESTABLISHMENT.
   b. AREAS THAT FAIL TO RESPOND OR BECOME DAMAGED SHOULD BE TREATED AGAIN USING SAME TREATMENT INITIALLY APPLIED

5) RECLAMATION SEED MIX (TOTAL 60 BULK POUNDS PER ACRE):

	SPECIES	BULK POUND PER ACRE
1.	BIG SAGEBRUSH	4.0
2.	RABBITBRUSH	4.0
3.	BITTERBRUSH	4.0
4.	INDIAN RICEGRASS	5.0
5.	GREAT BASIN WILDRYE	5.0
6.	COVER SHEEP FESCUE	10.0
7.	SODAR STREAMBANK WHEATGRASS	9.0
8.	ANNUAL RYEGRASS	15.0
9.	PURPLE SAGE (SALVIA DORII)	1.0
10.	FOUR WING SALTBRUSH	1.0

6) FERTILIZER
   16–16–8 — 400/ACRE

7) TOPSOIL AND VEGETATIVE STRIPPINGS SHALL BE STOCKPILED FOR REAPPLICATION TO ALL DISTURBED AREAS.

8) PLANTING MIX (A MIXTURE OF THE FOLLOWING COMPONENTS MEASURED BY VOLUME):

   a. 60% NATURAL SOIL
   b. 30% SOIL CONDITIONER / COMPOST
      10% AXIS SOIL CONDITIONER

SIGNAGE & STRIPING NOTES

1. ALL SIGNAGE AND PAVEMENT MARKINGS SHALL COMPLY WITH STANDARD SPECIFICATIONS FOR PUBLIC WORKS CONSTRUCTION, PROJECT SPECIFICATIONS, THESE PLANS, AND THE MOST CURRENT EDITION OF THE MANUAL FOR UNIFORM TRAFFIC CONTROL DEVICES (M.U.T.C.D.).
2. PARKING LOT STRIPING AND PAVEMENT MARKINGS SHALL BE INSTALLED AFTER APPLICATION AND CURING OF SLURRY SEAL. ASPHALT SURFACE SHALL BE CLEAN AND DRY PRIOR TO APPLICATION OF ANY PARKING LOT STRIPING, SYMBOLS, AND OTHER PAVEMENT MARKINGS.
3. CONTRACTOR SHALL VERIFY LOCATION OF EXISTING AND PROPOSED UTILITY LOCATIONS PRIOR TO INSTALLATION OF SIGNAGE.
4. SIGNAGE SHOWN ON THIS PLAN DOES NOT INCLUDE TRAFFIC CONTROL THAT MAY BE REQUIRED PRIOR TO AND DURING CONSTRUCTION. THE CONTRACTOR SHALL BE RESPONSIBLE FOR ANY TRAFFIC CONTROL THAT MAY BE REQUIRED DURING CONSTRUCTION.
5. ANY ADDITIONAL SIGNAGE AND STRIPING NEEDED SHALL BE THE RESPONSIBILITY OF THE CONTRACTOR

Avoid cutting underground utility lines. It's costly.
Call before you Dig
1–800–227–2600
UNDERGROUND SERVICE (USA)

CONSTRUCTION SPECIFICATIONS

1. **THE FIELD SURVEY, POWERLINE POLES, EASEMENTS AND EXISTING TOPOGRAPHY** SHOWN ON THESE IMPROVEMENT PLANS HAVE BEEN PROVIDED BY SUMMIT ENGINEERING (PHONE NO. 775-738-8058) OF WEST WENDOVER, NEVADA FOR THE OWNER, ARCHITECT, AND ENGINEER USE.
2. **PROJECT STANDARD SPECIFICATIONS.** ALL WORK RELATED TO THESE PROJECT IMPROVEMENTS SHALL BE EXECUTED AND COMPLETED IN ACCORDANCE WITH ALL STATE AND LOCAL STANDARDS REFERENCED ON THE PROJECT PLAN SHEETS AND THE PROJECT WRITTEN WORK SPECIFICATIONS. ALL SITE WORK CONSTRUCTION SHALL COMPLY WITH THE ***"STANDARD SPECIFICATIONS FOR PUBLIC WORKS CONSTRUCTION, LATEST EDITION"***, SPONSORED AND DISTRIBUTED BY THE REGIONAL TRANSPORTATION COMMISSION OF WASHOE COUNTY AND ADOPTED BY CITY OF WEST WENDOVER, FOR PUBLIC WORKS CONSTRUCTION. ALL CIVIL WORK SHALL COMPLY WITH THE APPLICABLE SECTIONS OF THESE SPECIFICATIONS UNLESS MODIFIED WITHIN THE WRITTEN CONTRACT WITH THE CONTRACTOR. THESE SPECIFICATIONS SHALL BE HEREAFTER REFERRED TO AS THE PROJECT ***"STANDARD SPECIFICATIONS"***. CONSTRUCTION DETAILS SHALL COMPLY WITH THE CONSTRUCTION DETAILS SHOWN IN THESE PLANS. CONSTRUCTION DETAILS NOT SHOWN SHALL BE IN ACCORDANCE WITH THE ***STANDARD DETAILS FOR PUBLIC WORKS CONSTRUCTION, LATEST EDITION***, AS ADOPTED AND DISTRIBUTED BY CITY OF WEST WENDOVER AND THE REGIONAL TRANSPORTATION COMMISSION OF WASHOE COUNTY, NEVADA.
3. **CLEARING & GRUBBING AND REMOVAL OF MATERIALS.** CLEARING & GRUBBING SHALL CONSIST OF REMOVING ALL BRUSH, GRASS, TOPSOIL MATERIALS AND OTHER NATURAL OR OBJECTIONABLE MATERIAL FROM THE CONSTRUCTION LIMITS PRIOR TO SUBGRADE PREPARATION. CLEARING & GRUBBING SHALL BE PERFORMED IN ACCORDANCE WITH **SECTION 300 CLEARING & GRUBBING** OF THE REFERENCED ***STANDARD SPECIFICATIONS.***
4. **STORMWATER AND EROSION CONTROL.** THE CONTRACTOR SHALL MAINTAIN AN EROSION CONTROL PROGRAM ON SITE AT ALL TIMES THAT MEETS, OR EXCEEDS, CITY OF WEST WENDOVER AND THE STATE OF NEVADA REQUIREMENTS. THIS SHALL INCLUDE THE PLACEMENT OF SILT FENCE AROUND THE PERIMETER OF THE JOBSITE AND THE PLACEMENT OF HAY BALES AND VEHICLE MUD TRACKOUT PREVENTION MEASURES AT INGRESS AND EGRESS LOCATIONS ON THE JOBSITE. THE CONTRACTOR SHALL DESIGNATE A LOCATION ON SITE TO CONSTRUCT A CONCRETE WASHOUT PIT FOR READY-MIX CONCRETE CLEANUP. AT THE COMPLETION OF WORK THE CONCRETE CLEANUP PIT SHALL BE REMOVED FROM THE SITE. A CLEAN JOBSITE SHALL BE MAINTAINED BY THE CONTRACTOR. A STORMWATER DISCHARGE PERMIT, FROM THE STATE OF NEVADA AND CITY OF WEST WENDOVER IS REQUIRED ON ALL CONSTRUCTION WORK SITES THAT EXCEED 1.0 ACRES IN SIZE. THE WORK SITE FOR THIS PROJECT IS APPROXIMATELY 5.38 ACRES±.
5. **DUST CONTROL PROGRAM.** THE CONTRACTOR SHALL BE RESPONSIBLE FOR MAINTAINING A DUST CONTROL PROGRAM ON SITE AT TIMES. THE CONTRACTOR SHALL TAKE ALL REASONABLE PRECAUTIONS TO ENSURE THAT AIRBORN DUST DOES NOT LEAVE THE JOBSITE.
6. **UNDERGROUND UTILITIES.** THE CONTRACTOR SHALL BE RESPONSIBLE FOR PROTECTING ALL UNDERGROUND UTILITIES AT ALL TIMES DURING CONSTRUCTION. THE LOCATIONS OF UNDERGROUND UTILITIES SHOWN ON THE PROJECT DRAWINGS ARE APPROXIMATE AND BASED ON EXISTING RECORDS AND FIELD SURVEYS. THE CONTRACTOR SHALL CALL **1-800-227-2600 "USA CALL BEFORE YOU DIG"** FOR UTILITY FIELD LOCATIONS PRIOR TO COMMENCING EXCAVATION ON SITE. THE CONTRACTOR SHALL COORDINATE ALL WORK WITH THE FOLLOWING UTILITY COMPANIES:

ELECTRIC POWER	NV ENERGY
NATURAL GAS	SOUTHWEST GAS CORPORATION,
TELEPHONE	FRONTIER TELEPHONE COMPANY
FIBER OPTIC COMMUNICATION LINES	ANTHEM, CC COMMUNICATION, FRONTIER TELEPHONE AND OTHER OPERATORS
CABLE TV	ZITO MEDIA
WATER & SEWER	CITY OF WEST WENDOVER

7. **SUBGRADE PREPARATION, EXCAVATION AND FILL.** SUBGRADE SOILS SHALL BE PROPERLY PROCESSED BY MOISTURIZING AND COMPACTING THE SUBGRADE SOIL TO A MINIMUM OF 90% MAXIMUM DRY DENSITY IN ACCORDANCE WITH TEST METHOD ASTM D 1557. FILL SOIL SHALL ALSO BE PROPERLY MOISTURIZED AND COMPACTED TO A MINIMUM OF 90% MAXIMUM DRY DENSITY IN ACCORDANCE WITH TEST METHOD ASTM D 1557. EARTHWORK SHALL COMPLY WITH **SECTION 302 SUBGRADE PREPARATION, SECTION 303 UNCLASSIFIED EXCAVATION, SECTION 304 UNCLASSIFIED FILL,** AND **SECTION 305 TRENCH EXCAVATION AND BACKFILL** OF THE PROJECT ***STANDARD SPECIFICATIONS.***
8. **WATER DISTRIBUTION PIPE, SANITARY SEWER PIPE, AND STORM DRAIN MATERIALS.** ALL WATER PIPE, SANITARY SEWER PIPE, AND STORM DRAIN MATERIALS INSTALLED SHALL BE IN ACCORDANCE WITH CITY OF WEST WENDOVER AND CITY OF WEST WENDOVER STANDARDS AND SHALL MEET THE REQUIREMENTS OF **SECTION 203.00 NON-PRESSURE AND PRESSURE PIPE** OF THE REFERENCED PROJECT ***STANDARD SPECIFICATIONS*** AS ADOPTED FOR PUBLIC WORKS CONSTRUCTION BY CITY OF WEST WENDOVER. WATER PIPE MATERIALS ARE SHOWN ON PLAN SHEET C-6. INSTALLATION OF BURIED WATER, SANITARY SEWER AND STORM DRAIN PIPE MATERIALS SHALL BE DONE AS SPECIFIED IN **SECTION 306 STORM DRAIN, CULVERTS, AND SANITARY SEWER CONSTRUCTION** AND **SECTION 307 DOMESTIC WATER AND IRRIGATION SYSTEMS** OF THE PROJECT ***STANDARD SPECIFICATIONS.*** UNDERGROUND WATER AND SEWER PIPING SHALL ALSO COMPLY WITH THE LATEST ADOPTED EDITION OF THE **UNIFORM PLUMBING CODE.** SANITARY SEWER PIPE SHALL BE SDR-35 GRAVITY SEWER PIPE AND SHALL BE INSTALLED AT THE LOCATIONS SHOWN ON THE PROJECT PLANS. ABS OR PVC PRESSURE PIPE SHALL BE USED WHERE PROPER SEPARATION BETWEEN POTABLE WATER LINES AND SANITARY SEWER LINES CANNOT BE MAINTAINED. WATER PIPE 4-INCHES IN DIAMETER TO 12-INCHES IN DIAMETER SHALL MEET THE MINIMUM REQUIREMENTS OF STANDARD **ANSI/AWWA C900 (DR 18).** ALL FITTINGS SHALL BE DUCTILE IRON. PVC WATER PIPE SHALL BE INSTALLED IN ACCORDANCE WITH STANDARD **ANSI/AWWA C605 - UNDERGROUND INSTALLATION OF PVC PRESSURE PIPE FOR WATER**. WATER SERVICE PIPE SHALL BE POLYETHYLENE WATER SERVICE PIPE , IRON PIPE SIZE (CTS), WITH A MINIMUM WORKING PRESSURE OF 200-PSI. CONSTRUCTION SHALL COMMENCE UPON APPROVAL OF THE CONSTRUCTION PLANS BY CITY OF WEST WENDOVER.
9. **AGGREGATE BASE MATERIAL.** AGGREGATE BASE MATERIAL SHALL BE OF THE CLASSIFICATION SHOWN ON THE PLANS AND SHALL BE PLACED TO THE COMPACTED THICKNESS SHOWN . AGGREGATE BASE SHALL BE MOISTURIZED, SPREAD, AND COMPACTED IN MAXIMUM LIFT THICKNESS OF 8-INCHES. MINIMUM COMPACTION REQUIREMENTS ARE 95% MAXIMUM DRY DENSITY IN ACCORDANCE WITH TEST METHOD ASTM D 1557. ALL AGGREGATE BASE MATERIAL, INCLUDING TYPE 2, CLASS B, AGGREGATE BASE, AND TYPE 1, CLASS A, AGGREGATE BASE SHALL MEET THE MATERIAL REQUIREMENTS SPECIFIED IN **SECTION 200 AGGREGATES FOR BASE COURSES** OF THE ***STANDARD SPECIFICATIONS.*** PLACEMENT OF AGGREGATE BASE MATERIAL SHALL BE AS SPECIFIED IN **SECTION 308 AGGREGATE BASE COURSES** OF THE PROJECT ***STANDARD SPECIFICATIONS.***
10. **CONCRETE CURB & GUTTERS, VALLEY GUTTERS, SIDEWALK AND APPROACH SLABS.** AGGREGATES FOR CONCRETE SHALL COMPLY WITH **SECTION 200 AGGREGATES** OF THE PROJECT ***STANDARD SPECIFICATIONS.*** CEMENT AND OTHER ADMIXTURES SHALL COMPLY WITH **SECTION 202 CEMENT AND RELATED MATERIALS.** ALL CONCRETE SHALL BE AIR ENTRAINED WITH A MINIMUM STRENGTH OF 4,000-PSI AT 28-DAYS. CONCRETE MIX DESIGNS SHALL BE PROVIDED TO THE ENGINEER, ARCHITECT AND OWNER AND SHALL BE CURRENT. MIX DESIGNS SHALL BE AS SPECIFIED IN THE PROJECT ***STANDARD SPECIFICATIONS*** FOR THE TYPE OF WORK. CONCRETE SHALL BE PLACED, FINISHED AND CURED IN ACCORDANCE WITH **SECTION 311 CONCRETE STRUCTURES AND MASONRY CONSTRUCTION** AND **SECTION 312 CONCRETE CURBS, GUTTERS, WALKS, DRIVEWAYS, AND ALLEY RETURNS** OF THE PROJECT ***STANDARD SPECIFICATIONS.***
11. **PLANTMIX BITUMINOUS PAVEMENT, PRIME COATS, SEAL COATS, AND ASPHALTIC MATERIALS.** AGGREGATES FOR BITUMINOUS PAVEMENT SHALL BE AS SPECIFIED IN **SECTION 200 AGGREGATES** OF THE PROJECT ***STANDARD SPECIFICATIONS.*** ASPHALT CEMENTS AND BITUMINOUS MATERIALS SHALL MEET THE REQUIREMENTS OF **SECTION 201 BITUMINOUS MATERIALS** OF THE PROJECT ***STANDARD SPECIFICATIONS.*** THE CONTRACTOR SHALL PROVIDE THE ENGINEER WITH A MIX DESIGN FOR APPROVAL PRIOR TO PLACEMENT OF BITUMINOUS PAVING MATERIALS. PLANTMIX BITUMINOUS PAVEMENT AGGREGATE SHALL BE TYPE 2 ON CITY ROADS AND TYPE 3 IN PARKING AREAS, UNLESS OTHERWISE SPECIFIED OR APPROVED. LIQUID ASPHALT AND EMULSIFIED ASPHALT PRIME COAT SHALL BE PLACED IN ACCORDANCE WITH **SECTION 315 PRIME COAT** OF THE ***STANDARD SPECIFICATIONS.*** TACK COAT AND SEAL COAT SHALL BE PLACED IN ACCORDANCE WITH **SECTION 316 TACK COAT** AND **SECTION 317 SEAL COAT.** PLANTMIX BITUMINOUS PAVEMENT SHALL BE DELIVERED, PLACED AND COMPACTED WITHIN SPECIFIED TOLERANCES IN ACCORDANCE WITH THE REQUIREMENTS SPECIFIED IN **SECTION 320 PLANTMIX BITUMINOUS PAVEMENT** OF THE PROJECT ***STANDARD SPECIFICATIONS.***
12. **ROCK RIPRAP, EROSION CONTROL ROCK, AND ROCK LANDSCAPING MATERIAL.** ROCK RIPRAP SHALL BE AS SHOWN ON THE PROJECT DRAWINGS. RIRAP MATERIAL SHALL BE AS SPECIFIED IN **SUBSECTION 200.07 RIPRAP** OF THE PROJECT ***STANDARD SPECIFICATIONS.*** RIPRAP AND LANDSCAPING ROCK FOR EROSION CONTROL SHALL MEET THE SIZE AND CONSISTENCY REQUIREMENTS SHOWN ON THE PLANS.
13. ALL ELEVATIONS SHOWN ON THE CONSTRUCTION PLANS ARE TO THE FINISH GRADE ELEVATION OF THE MATERIAL COURSES INDICATED ON THE PLAN DRAWINGS. BURIED UTILITY LINE ELEVATIONS SHALL BE NOTED AS EITHER TOP OF PIPE OR INVERT ELEVATION (PIPE FLOWLINE). THE CONTRACTOR SHALL VERIFY UTILITY LINE LOCATIONS AND PROTECT ALL EXISTING AND NEW UTILITY LINES.
14. THE CONTRACTOR SHALL BE RESPONSIBLE FOR MAINTAINING AN ADEQUATE SAFETY PROGRAM DURING ALL CONSTRUCTION WORK ON THE PROJECT SITE. MINIMUM SAFETY STANDARDS TO BE MET ON THE JOB SHALL EXCEED THOSE MINIMUM STANDARDS ESTABLISHED BY THE FEDERAL GOVERNMENT (OSHA), THE STATE OF NEVADA AND THE LOCAL GOVERNING AUTHORITY. THE CONTRACTOR SHALL BE AWARE THAT ALL CURRENT MSHA AND SITE SPECIFIC TRAINING AND SAFETY REQUIREMENTS SHALL BE ADHERED TO WHEN WORK IS CONDUCTED ON LOCAL MINING COMPANY PROPERTIES.
15. UPON COMPLETION OF WORK THE CONTRACTOR SHALL FINISH GRADE ALL DISTURBED AREAS AND CLEANUP ALL CONSTRUCTION DEBRIS. THE CONDITION OF THE WORK SITE SHALL BE LEFT IN A CLEAN CONDITION FREE OF ALL CONSTRUCTION DEBRIS. ALL DISTURBED AREAS SHALL BE REGRADED BY THE CONTRACTOR. UPON REGRADING AND CLEANUP ALL DISTURBED AREAS SHALL BE RESEEDED BY HARROWING AND BROADCAST SEEDING, OR BY HYDROSEEDING. THE SEED MIX TO BE APPLIED BY THE CONTRACTOR SHALL INCLUDE: CRESTED WHEAT - 5.0 LBS/ACRE, BIG BLUE GRASS - 0.5 LBS/ACRE, INDIAN RICEGRASS - 1.0 LBS/ACRE, AND BASIN WILDRYE - 4.5 LBS/ACRE FOR A TOTAL MIXED SEED MASS OF 11.0 LBS/ACRE.
16. CONTRACTOR AT ALL TIME SHALL M

C-3 - SITE PLAN

EXISTING FLOWLINE

PROPOSED ASPHALT PARKING 54'x18' – 6 STALLS

EMPLOYEE PARKING (6)

PATIO 570 GSF

EXISTING WATER STUB, LOCATION IS APPROXIMATE, FIELD VERIFY

ADA PARKING

4" TO FIRE RISER

1" DOMESTIC WATER

4" SANITARY SEWER

FIRE STATION 11,383 GSF

WEST APRON 7,500 GSF

EAST APRON 6,300 GSF

PROPOSED TRASH ENCLOSURE PAD 16'x12'

EXISTING SSMH RIM=4488.38

PROPOSED 20'x20' EMERGENCY GENERATOR PAD

EMERGENCY GENERATOR 400 GSF

5' SIDEWALK

6" SHOP DRAINS TO SAND/OIL SEPARATOR

TEMP. PARKING (4)

EXISTING STREET SIGN TO BE REMOVED

EXISTING UTILITY/ELEC BOX, PROTECT IN PLACE

EXISTING FIBER MARKER, PROTECT IN PLACE

EXISTING LIGHT POLE W/ BASE, PROTECT IN PLACE

EXISTING SSMH RIM=4499.64

ADA/VISITOR PARKING (OPTION)

EXISTING WATER BLOW-OFF VALVE, PROTECT IN PLACE

EXISTING UTILITY/ELEC BOX, PROTECT IN PLACE

EXISTING LIGHT POLE W/ BASE, PROTECT IN PLACE

EXISTING UTILITY/ELEC BOX, PROTECT IN PLACE

EXISTING WATER VALVES TOP OF NUT ELEV=4494.22

EXISTING FIRE HYDRANT ASSEMBLY W/ SHUT-OFF VALVE

EXISTING SSMH RIM=4496.75

PROPOSED MONUMENT SIGN 20 GSF

PRELIMINARY LOCATION OF PROPOSED SAND/OIL SEPARATOR

EXISTING GAS LINE FIELD VERIFY

EXISTING ELECTRIC FIELD VERIFY

EXISTING LIGHT POLE W/ BASE, PROTECT IN PLACE

EXISTING UTILITY/ELEC BOX, PROTECT IN PLACE

N GENE L JONES WAY

EXISTING WATERMAIN

EXISTING SEWER MAIN

EXISTING SSMH RIM=4495.48

EXISTING SSMH RIM=4488.38

EXISTING FLOWLINE

EXISTING DRAINAGE SWALE TO BE RE-ALIGNED AROUND PROPOSED SITE

EXISTING LIGHT POLE W/ UTILITY/ELEC BOX, PROTECT IN PLACE

EXISTING FIBER MARKER, PROTECT IN PLACE

Rock

N

1" = 20'

0 20 40 60 80 100

SUMMIT ENGINEERING CORPORATION
1150 LAMOILLE HIGHWAY, ELKO, NV, 89801
PHONE:(775) 738-8058 FAX:(775) 747-8559

Copyright SUMMIT ENG 2022

REV.	DATE	DESCRIPTION	BY	APP'D
1	06-23-2022	CITY OF ELKO REDLINES	SA	NB

PRELIMINARY SITE PLAN
CITY OF WEST WENDOVER ~ FIRE STATION
SITE PLAN

WENDOVER, ELKO COUNTY, NEVADA

DESIGNED BY: NIB
CHECKED BY: NIB

SCALE
HORIZ: 1
VERT: 1" = 20'

JOB NO: 3-82965

SHEET C-3 OF 4

N:\DWGS\82965_W\WendoverFireStaCivil\WWendoverFireStaSiteMap.DWG - 9:57 AM * 08-NOV-2022

FIRE STATION
11,383± GSF
FF=4500.65

ROCK

N GENE L JONES WAY

EXISTING LIGHT POLE W/ UTILITY/ELEC BOX, PROTECT IN PLACE

EXISTING FIBER MARKER, PROTECT IN PLACE

N

1" = 20'

0 20 40 60 80 100

SUMMIT ENGINEERING CORPORATION
1150 LAMOILLE HIGHWAY, ELKO, NV, 89801
PHONE:(775) 738-8058 FAX:(775) 747-8559

Copyright SUMMIT ENG 2022

REV.	DATE	DESCRIPTION	BY	APP'D
1	06-23-2022	CITY OF ELKO REDLINES	SA	NIB

PRELIMINARY SITE PLAN
CITY OF WEST WENDOVER ~ FIRE STATION
GRADING PLAN

WENDOVER ELKO COUNTY NEVADA

DESIGNED BY: NIB
CHECKED BY: NIB

SCALE
HORIZ: 1
VERT: 1" = 20'

JOB NO: 3-82965

SHEET C-4 OF 7

N:\DWGS\J82965_W\WendoverFireSta\Civil\WWendoverFireStaSiteMap.DWG ~ 9:57 AM ~ 08-NOV-2022

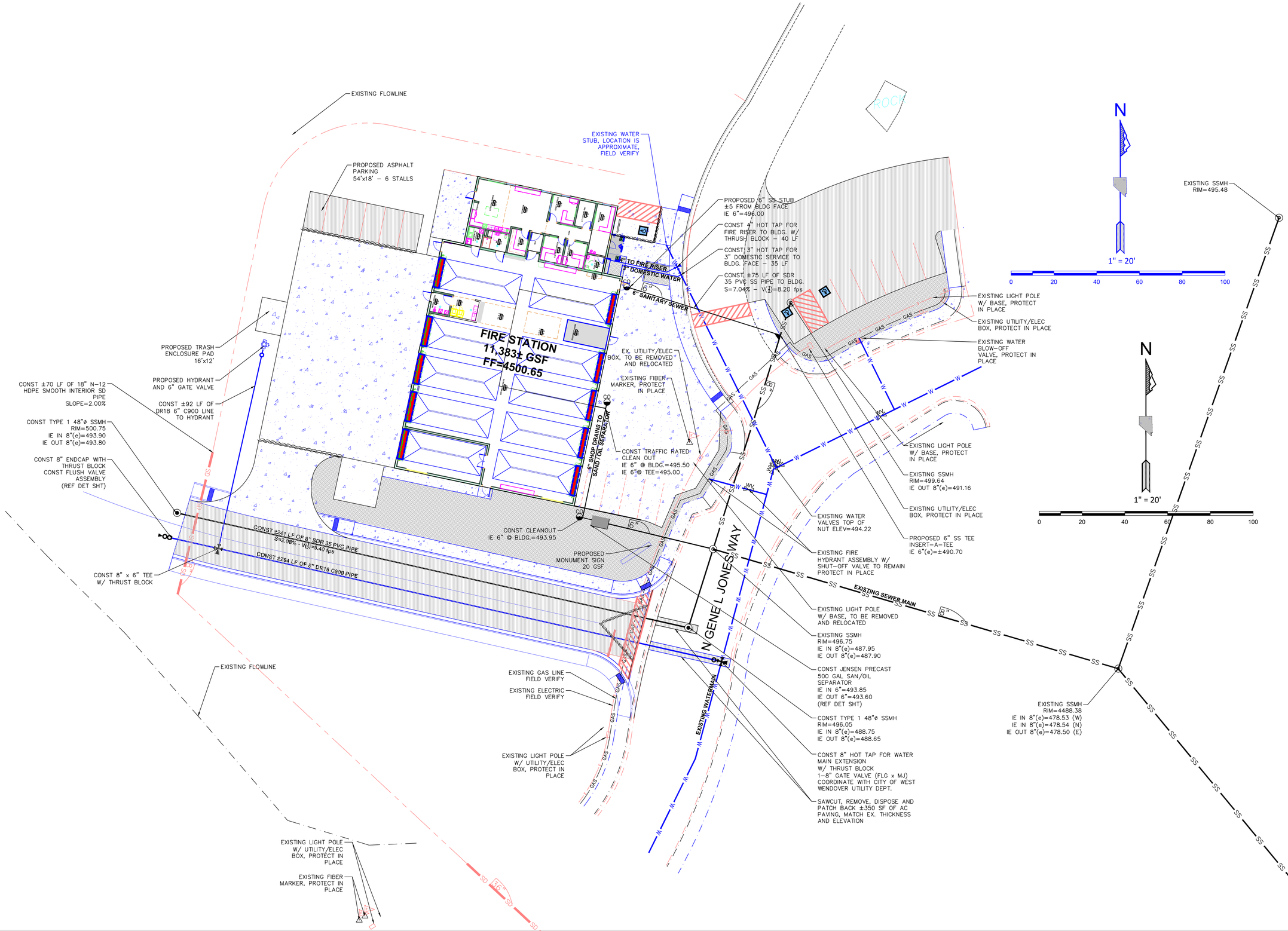

SUMMIT ENGINEERING CORPORATION
1150 LAMOILLE HIGHWAY, ELKO, NV, 89801
PHONE:(775) 738-8068 FAX:(775) 747-8559

Copyright SUMMIT ENG 2022

REV.	DATE	DESCRIPTION	BY	APP'D
1	06-23-2022	CITY OF ELKO REDLINES	SA	NIB

PRELIMINARY SITE PLAN
CITY OF WEST WENDOVER ~ FIRE STATION
UTILITY PLAN

WENDOVER, ELKO COUNTY, NEVADA

DESIGNED BY: NIB
CHECKED BY: NIB
SCALE
HORIZ: 1
VERT: 1" = 20'
JOB NO: 3-82965

SHEET C-5 OF 7

N:\DWGS\82965_WWendoverFireStat\Civil\WWendoverFireStatBMap.DWG - 9:57 AM - 08-NOV-2022

CONST. ±975 SF OF AC PARKING 3" OF TYPE 2 AC ON 9" OF TYPE 2 BASE COMPACTED TO 95% MDD

CONST ±7,975 SF OF 8" THICK CONC. ON 6" OF TYPE 2 BASE COMPACTED TO 95% MDD W/ #5 REBAR @ 18" O.C. EACH WAY

PROPOSED TRASH ENCLOSURE PAD 16'x12', 6" THICK CONC ON 6" OF TYPE 2 BASE COMPACTED TO 95% MDD

CONST. ±575 SF OF 4" THICK CONC. ON 4" OF TYPE 2 BASE COMPACTED TO 95% MDD

CONST ±5,550 SF OF AC PARKING 3" OF TYPE 2 AC ON 9" OF TYPE 2 BASE COMPACTED TO 95% MDD (REF DET SHT)

CONST ±26 & ±27 LF OF 6' WIDE, 4" THICK CONC SIDEWALK ON 4" OF TYPE 2 BASE COMPACTED TO 95% MDD

FIRE STATION
11,383± GSF
FF=4500.65

EXISTING STREET SIGN TO REMAIN PROTECT IN PLACE

CONST. TYPE 3 CURB RAMPS W/ DETECTABLE WARNING MARKERS FOR ADA ACCESS

PROPOSED 20' x 20' EMERGENCY GENERATOR PAD 6" THICK CONC ON 6" OF TYPE 2 BASE COMPACTED TO 95% MDD

PROPOSED ±52' LF OF 5' WIDE SIDEWALK 4" THICK CONC ON 4" OF TYPE 2 BASE COMPACTED TO 95% MDD

CONST ±115 LF OF 6' WIDE, 6" THICK DEPRESSED CONC SIDEWALK ON 6" OF TYPE 2 BASE W/ #5 REBAR @ 18" O.C. EACH WAY

CONST ±6,550 SF OF 8" THICK CONC. ON 6" OF TYPE 2 BASE W/ #5 REBAR @ 18" O.C. EACH WAY

EXISTING CURB, GUTTER & SIDEWALK TO REMAIN FIELD VERIFY

CONSY ±5,750 SF OF AC PAVING 3" OF TYPE 2 AC ON 9" OF TYPE 2 BASE COMPACTED TO 95% MDD

CONST ±200 & ±125 LF OF 5' WIDE, 4" THICK CONC SIDEWALK ON 4" OF TYPE 2 BASE COMPACTED TO 95% MDD

CONST. TYPE 1 CURB RAMPS W/ DETECTABLE WARNING MARKERS FOR ADA ACCESS

N GENE L JONES WAY

EXISTING LIGHT POLE W/ UTILITY/ELEC BOX, PROTECT IN PLACE

EXISTING FIBER MARKER, PROTECT IN PLACE

ROCK

N

1" = 20'

0 20 40 60 80 100

SUMMIT ENGINEERING CORPORATION
1150 LAMOILLE HIGHWAY, ELKO, NV, 89801
PHONE:(775) 738-8058 FAX:(775) 747-8559

Copyright SUMMIT ENG 2022

REV.	DATE	DESCRIPTION	BY	APP'D
1	06-23-2022	CITY OF ELKO REDLINES	SA	NIB

PRELIMINARY SITE PLAN
CITY OF WEST WENDOVER ~ FIRE STATION
PARKING & PAVING PLAN

WENDOVER ELKO COUNTY NEVADA

DESIGNED BY: NIB
CHECKED BY: NIB
SCALE
HORIZ: 1
VERT: 1" = 20'
JOB NO: 3-82965

SHEET C-6 OF 7

N:\DWGS\J82965_WWendoverFireStat\Civil\WWendoverFireStaBMap.DWG ~ 9:57 AM ~ 08-NOV-2022

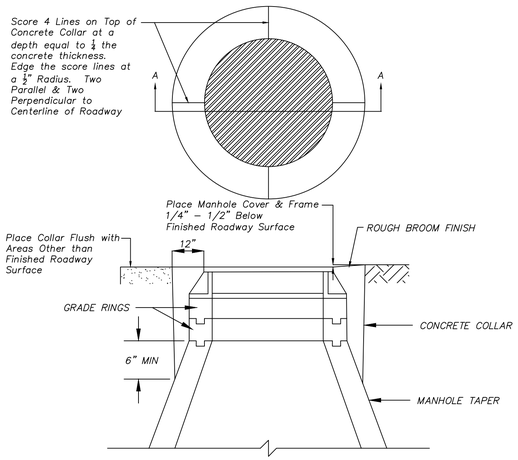

SECTION A–A

NOTES:

1. CONCRETE SHALL MEET THE REQUIREMENTS OF SECTION 337.10 OF THE LATEST EDITION OF THE STANDARD SPECIFICATIONS FOR PUBLIC WORKS CONSTRUCTION.
2. MANHOLE COVER & FRAME SHALL BE SET ¼" TO ½" BELOW FINISHED CONCRETE OR BITUMINOUS SURFACE. MANHOLE COLLARS IN ALL OTHER AREAS SHALL BE SET FLUSH WITH FINISHED GRADE, UNLESS OTHERWISE SPECIFIED.
3. CONCRETE COLLAR IS REQUIRED WHEN MANHOLE IS NOT LOCATED IN CONCRETE OR BITUMINOUS SURFACE.
4. REFER TO DETAIL SHEET (MANHOLE – GENERAL NOTES) FOR ADDITIONAL INFORMATION.

1 MANHOLE COLLAR DETAIL
NOT TO SCALE

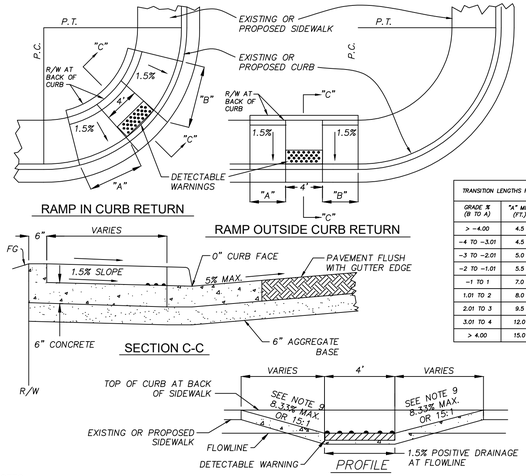

TRANSITION LENGTHS FOR 8.33% SLOPE		
GRADE % (B TO A)	"A" MIN. (FT.)	"B" MIN. (FT.)
> –4.00	4.5	15.0
–4 TO –3.01	4.5	12.0
–3 TO –2.01	5.0	9.5
–2 TO –1.01	5.5	8.0
–1 TO 1	7.0	7.0
1.01 TO 2	8.0	5.5
2.01 TO 3	9.5	5.0
3.01 TO 4	12.0	4.5
> 4.00	15.0	4.5

NOTES
1. CONCRETE SHALL MEET THE REQUIREMENTS OF SECTION 337.10 OF THE LATEST EDITION OF THE STANDARD SPECIFICATIONS FOR PUBLIC WORKS CONSTRUCTION.
2. AGGREGATE BASE MATERIAL SHALL MEET THE REQUIREMENTS OF SECTION 302 & 308 OF THE LATEST EDITION OF THE STANDARD SPECIFICATIONS FOR PUBLIC WORKS CONSTRUCTION.
3. CURB RAMP WITHIN CURB RETURN SHALL BE LOCATED AT THE MIDPOINT OF CURB RETURN.
4. RAMPS SHALL BE CONSTRUCTED WITH A ROUGH BROOM FINISH TRANSVERSE TO THE SLOPE OF THE RAMP.
5. WHEN CONSTRUCTING A RAMP WHERE CURB & GUTTER EXIST, COMPLETELY REMOVE INTERFERING PORTIONS OF EXISTING CURB & GUTTER. LOCATION OF CURB RAMP SHALL BE APPROVED BY THE CITY OF WEST WENDOVER PRIOR TO INSTALLATION.
6. DETECTABLE WARNINGS SHALL BE YELLOW AND CONSIST OF RAISED TRUNCATED DOMES AND PLACED AT THE BOTTOM PORTION OF THE RAMP.
7. CROSS SLOPE OF SIDEWALK AND RAMP SURFACES SHALL NOT EXCEED 2%.
8. CURB RAMPS & DETECTABLE WARNINGS SHALL MEET THE REQUIREMENTS OF 28 CFR PART 36, ADA STANDARDS FOR ACCESSIBLE DESIGN.
9. PER THE PROWAG, SECTION 304.3.2, THE RUNNING SLOPE OF A CURB RAMP SHALL BE 8.33% MAXIMUM, BUT SHALL NOT REQUIRE THE RAMP LENGTH TO EXCEED 15.0 FEET. ON STEEP STREETS OR INTERSECTIONS THE TRANSITIION TO FULL HEIGHT CURB MAY HAPPEN IN THE FIRST 15' MINIMUM AND THE RESULTING SLOPE OF THE RAMP IS ALLOWED TO EXCEED 8.33%

2 TYPE I CURB RAMP
NOT TO SCALE

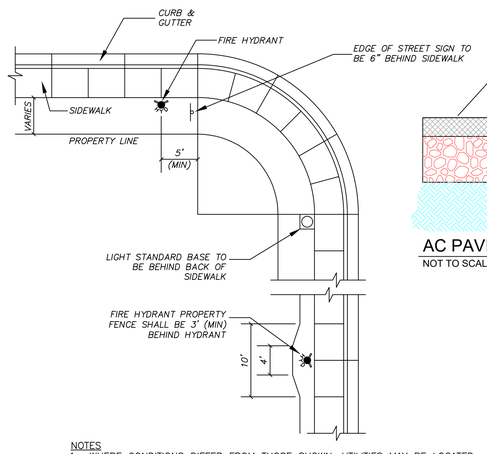

NOTES
1. WHERE CONDITIONS DIFFER FROM THOSE SHOWN, UTILITIES MAY BE LOCATED WITHIN THE SIDEWALK SECTION WITH THE APPROVAL OF THE GOVERNING AGENCY.
2. WHEN FIRE HYDRANTS AND LIGHT STANDARDS ARE IN THE SAME VICINITY, THEY SHALL BE SEPARATED BY AT LEAST 5 FEET.
3. WHEN STOP SIGN IS LOCATED AT P.C., STREET SIGNS SHALL BE MOUNTED ON SAME POLE.
4. STREET SIGNS AT MID–RETURN SHALL BE LOCATED ADJACENT TO A PEDESTRIAN CURB RAMP, IF APPLICABLE.

MAT
5. WHERE CURB AND GUTTER DO NOT EXIST, EDGE OF STOP SIGN SHALL BE PLACED AT THE BEGINNING OF THE CURVE, 6 FEET FROM THE EDGE OF PAVEMENT.

3 STREET LIGHT, HYDRANT, & SIGN LOCATION
NOT TO SCALE

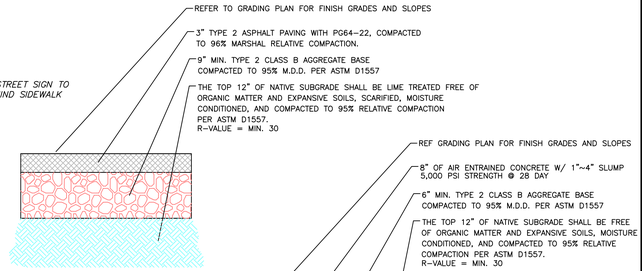

AC PAVING SECTION
NOT TO SCALE

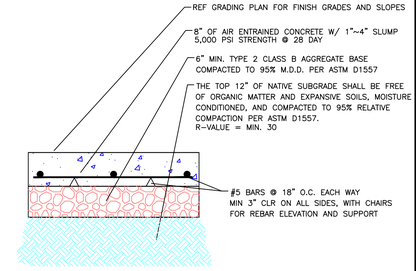

CONCRETE PAVING SECTION
NOT TO SCALE

NOTES
1. ASPHALT PAVING SHALL BE TYPE 3 (1/2 INCH SIZE), 50 BLOW, MARSHAL MIX DESIGN, WITH 3 TO 5% AIR VOIDS, AND SHALL BE COMPACTED TO 96% MARSHALL RELATIVE COMPACTION. THE CONTRACTOR SHALL SUBMIT THE PROPOSED ASPHALT MIX DESIGN TO THE GEOTECHNICAL ENGINEER FOR APPROVAL, A MINIMUM OF 1 WEEK PRIOR TO PAVING.
2. AGGREGATE BASE SHALL BE MOISTURE CONDITIONED TO WITHIN 2% OF OPTIMUM, PLACED IN ONE LIFT, AND COMPACTED TO 95% OF MAXIMUM DRY DENSITY PER ASTM D1557.
3. THE SLOPE OF THE FINISH SURFACE SHALL BE IN ACCORDANCE WITH THE ELEVATIONS AND SLOPES ON THE GRADING PLAN, BUT IN NO INSTANCE SHALL BE LESS THAN 1%.
4. NEW ASPHALT PAVING FINISH SURFACE SHALL BE FLUSH WITH EXISTING ASPHALT PAVING SURFACE, MATCHING GRADE AT LIMITS OF REMOVAL AND REPLACEMENT.

4 AC PAVING SECTION
NOT TO SCALE

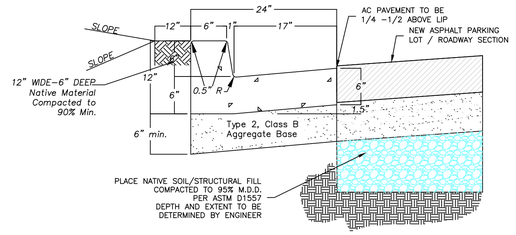

NOTES
1. CONCRETE SHALL MEET THE REQUIREMENTS OF SECTION 337.10 OF THE LATEST EDITION OF THE STANDARD SPECIFICATIONS FOR PUBLIC WORKS CONSTRUCTION.
2. AGGREGATE BASE MATERIAL SHALL MEET THE REQUIREMENTS OF SECTIONS 302 & 308 OF THE LATEST EDITION OF THE STANDARD SPECIFICATIONS FOR PUBLIC WORKS CONSTRUCTION.
3. ALL CONCRETE CURB AND GUTTER SHALL HAVE ½" EXPANSION JOINTS EVERY 90 FEET AND AT ALL CURB RETURNS. WEAKENED PLANE JOINTS SHALL BE EVERY 10 FEET.
4. PLANTMIX BITUMINOUS SURFACE SHALL BE ½" TO ½" ABOVE LIP OF GUTTER PAN.

5 CURB & GUTTER DETAIL
NOT TO SCALE

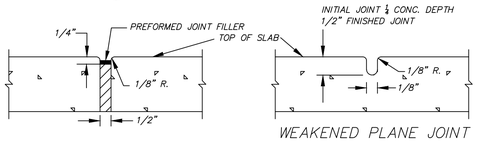

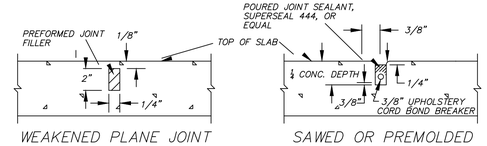

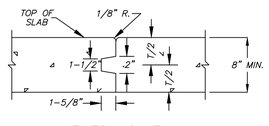

KEYED JOINT

9 P.C.C. JOINT DETAIL

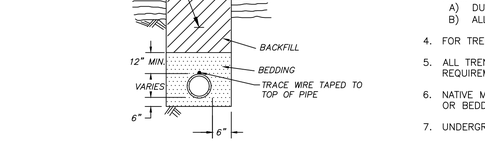

DUCTILE IRON PIPE, PVC, PE & HDPE PIPE

NOTES
1. WATER DENSIFIED BACKFILL AND TUNNELING SHALL NOT BE ALLOWED.
2. BACKFILL SHALL MEET THE REQUIREMENTS FOR CLASS "E" BACKFILL WITH NO ROCKS SIZED OVER 4", COMPACTED IN 6" (MAX.) LIFT TO 90% (MIN.) RELATIVE COMPACTION.
3. 3. BEDDING MATERIAL FOR THE FOLLOWING PIPE SHALL MEET THE REQUIREMENTS OF SECTION 200 & 305 OF THE LATEST EDITION OF THE STANDARD SPECIFICATIONS FOR PUBLIC WORKS CONSTRUCTION AND COMPACTED TO A MINIMUM 90% RELATIVE COMPACTION.
   A) DUCTILE IRON PIPE – CLASS "C"
   B) ALL OTHER PIPE – CLASS "A"
4. FOR TRENCHES & EXCAVATIONS LOCATED WITHIN ROADWAY SECTION, SEE PAVEMENT PATCH DETAIL.
5. ALL TRENCHES AND EXCAVATIONS SHALL CONFORM TO THE LATEST EDITION OF O.S.H.A. AND M.U.T.C.D. REQUIREMENTS.
6. NATIVE MATERIAL MUST BE APPROVED BY THE CITY OF WEST WENDOVER ENGINEER PRIOR TO USING AS BACKFILL OR BEDDING.
7. UNDERGROUND WARNING TAPE SHALL BE METALLIC AND APPROPRIATELY LABELED AND COLORED.

5 TRENCH DETAIL
NOT TO SCALE

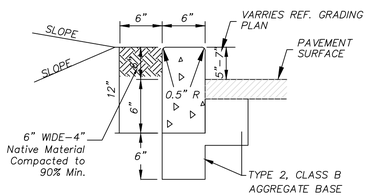

PARKING LOT

NOTES
1. CONCRETE SHALL MEET THE REQUIREMENTS OF SECTION 337.10 OF THE LATEST EDITION OF THE STANDARD SPECIFICATIONS FOR PUBLIC WORKS CONSTRUCTION.
2. AGGREGATE BASE MATERIAL SHALL MEET THE REQUIREMENTS OF SECTIONS 302 & 308 OF THE LATEST EDITION OF THE STANDARD SPECIFICATIONS FOR PUBLIC WORKS CONSTRUCTION.
3. ALL CONCRETE CURB SHALL HAVE 1/2" EXPANSION JOINTS EVERY 90 FEET AND AT ALL CURB RETURNS. WEAKENED PLANE JOINTS SHALL BE EVERY 10 FEET. FOR BARRIER CURB ONLY, PLACE WEAKENED PLANE JOINTS EVERY 5 FEET.
4. GLUE DOWN THE TYPE 2 MEDIAN CURB TO THE PAVEMENT SURFACE USING EPOXY CEMENT.

6 PARKING LOT TYPE 1 POST CURB
NOT TO SCALE

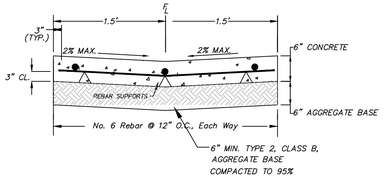

NOTES
1. CONCRETE SHALL MEET THE REQUIREMENTS OF SECTION 337.10 OF THE LATEST EDITION OF THE STANDARD SPECIFICATIONS FOR PUBLIC WORKS CONSTRUCTION.
2. AGGREGATE BASE MATERIAL SHALL MEET THE REQUIREMENTS OF SECTIONS 302 & 308 OF THE LATEST EDITION OF THE STANDARD SPECIFICATIONS FOR PUBLIC WORKS CONSTRUCTION
3. REINFORCING STEEL SHALL MEET THE REQUIREMENTS OF SECTION 326 OF THE LATEST EDITION OF THE STANDARD SPECIFICATIONS FOR PUBLIC WORKS CONSTRUCTION.
4. PLANTMIX BITUMINOUS SURFACE SHALL BE ½" TO ½" ABOVE VALLEY GUTTER. ALL OTHER SURFACES TO BE FLUSH WITH VALLEY GUTTER.
5. IF 2% CROSS SLOPE CAN NOT BE ATTAINED ON THE VALLEY GUTTER, PROPOSED CROSS SLOPE SHALL BE APPROVED BY THE CITY OF WEST WENDOVER.
6. CURB RAMPS & DETECTABLE WARNINGS SHALL MEET THE REQUIREMENTS OF THE LATEST EDITION OF THE ADAAG.
7. DRIVEWAY GEOMETRICS SHALL GO TO THE P.C. AND THE P.T.
8. MAINTAIN POSITIVE DRAINAGE IN CROSSWALK AREAS AND PEDESTRIAN ROUTES TO PREVENT PONDING.
9. CROSS SLOPE OF SIDEWALK AND CURB RAMP SURFACES SHALL NOT EXCEED 2%.
10. WHEN CONSTRUCTING WHERE CURB & GUTTER ALREADY EXIST, COMPLETELY REMOVE INTERFERING PORTIONS OF EXISTING CURB & GUTTER. LOCATION OF CURB RAMP SHALL BE APPROVED BY THE CITY OF WEST WENDOVER PRIOR TO INSTALLATION.
11. DETECTABLE WARNINGS SHALL BE YELLOW AND CONSIST OF RAISED TRUNCATED DOMES AND PLACED AT THE BOTTOM PORTION OF THE RAMP.
12. CURB RAMPS SHALL BE CONSTRUCTED WITH A ROUGH BROOM FINISH TRANSVERSE TO THE SLOPE OF THE RAMP.
13. PLANTMIX BITUMINOUS SURFACE SHALL BE FLUSH WITH THE EDGE OF THE GUTTER PAN IN THE AREA OF THE CURB RAMP.

7 3' P.C.C VALLEY GUTTER DETAIL
NOT TO SCALE

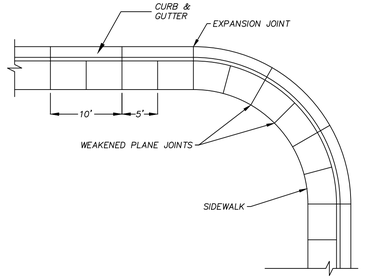

NOTES
1. CONCRETE SHALL MEET THE REQUIREMENTS OF SECTION 337.10 OF THE LATEST EDITION OF THE STANDARD SPECIFICATIONS FOR PUBLIC WORKS CONSTRUCTION.
2. ALL CONCRETE SIDEWALK SHALL HAVE ½ " EXPANSION JOINTS EVERY 30 FEET AND AT ALL CURB RETURNS. WEAKENED PLANE JOINTS SHALL BE EVERY 5 FEET AND COINCIDE WITH THE ADJACENT CURB AND GUTTER WEAKENED PLANE JOINTS. THE WEAKENED PLANE JOINTS PLACED EVERY 5' IN THE SIDEWALK MAY BE SAWCUT WITH CITY OF WEST WENDOVER APPROVAL AND SHALL MEET THE REQUIREMENTS OF SECTION 314 OF THE LATEST EDITION OF THE STANDARD SPECIFICATIONS FOR PUBLIC WORKS CONSTRUCTION.
3. AGGREGATE BASE MATERIAL SHALL MEET THE REQUIREMENTS OF SECTION 302 & 308 OF THE LATEST EDITION OF THE STANDARD SPECIFICATIONS FOR PUBLIC WORKS CONSTRUCTION.
4. FORESLOPES & BACKSLOPES SHALL BE APPROVED BY THE CITY OF WEST WENDOVER PRIOR TO CONSTRUCTING.
5. CROSS SLOPE OF SIDEWALK SHALL NOT EXCEED 2%.

8 P.C.C. SIDEWALK DETAIL
NOT TO SCALE

SUMMIT ENGINEERING CORPORATION
1150 LAMOILLE HIGHWAY, ELKO, NV, 89801
PHONE:(775) 738-8068 FAX:(775) 747-8559

Copyright SUMMIT ENG 2022

REV.	DATE	DESCRIPTION	BY	APP'D
1	06-23-2022	CITY OF ELKO REDLINES	SA	NIB

CIVIL IMPROVEMENT PLANS FOR
CITY OF WEST WENDOVER ~ FIRE STATION
DETAIL SHEET
WENDOVER ELKO COUNTY NEVADA

DESIGNED BY: NIB
CHECKED BY: NIB
SCALE
HORIZ: NONE
VERT:
JOB NO: 3-82965

SHEET C-7 OF 7

N:\DWGS\82965_WWendoverFireSta\Civil\WendoverFireStaBlkMap.DWG ~ 9:57 AM ~ 08-NOV-2022



1 OVERALL SITE PLAN
SCALE: 1" = 20'-0"

NORTH 0' 10' 20' 40'

GENERAL NOTES

1. CONTRACTOR TO VERIFY DIMENSIONS ON FIELD PRIOR TO COMMENCEMENT OF ANY SITE WORK. DO NOT SCALE DRAWINGS.
2. REFER TO CIVIL DRAWINGS FOR ADDITIONAL INFORMATION ON SCOPE OF WORK AND LIMIT OF CONSTRUCTION.
3. REFER TO CIVIL DRAWINGS FOR PARKING, STREET & CURB DIMENSIONS, AND STRIPING INFORMATION.
4. REFER TO LANDSCAPE DRAWINGS FOR ADDITIONAL SITE INFORMATION INCLUDING SITE FURNISHINGS AND HARDSCAPE PLANS.
5. REFER TO CIVIL DRAWINGS FOR HORIZONTAL CONTROL.
6. REFER TO CIVIL DRAWINGS FOR STREET DEVELOPMENT OUTSIDE OF PROPERTY LINE.
7. ALL SITE / RETAINING WALLS TO HAVE ANTI-GRAFFITI COATING, UNLESS NOTED OTHERWISE.
8. REFER TO SHEET A2.01 FOR ROOM FINISH SCHEDULE AND MATERIAL SCHEDULE.

KEYNOTES

tsk
314 South Water Street,
Suite 100
Henderson, NV 89015
phone: 702.456.3000
fax: 702.898.6209
www.tska.com

THESE DRAWINGS AND SPECIFICATIONS ARE THE PROPERTY OF TATE SNYDER KIMSEY ARCHITECTS AND MAY NOT BE REPRODUCED OR USED FOR ANY PURPOSE WITHOUT THE ARCHITECTS WRITTEN CONSENT. AS INSTRUMENTS OF SERVICE, THESE DOCUMENTS ARE NOT FINAL AND READY FOR USE, AND THEREFORE NOT VALID, UNLESS THEY ARE SEALED, SIGNED AND DATED.

Copyright, Ltd 2023

Consultant

PLEASE RECYCLE

Project
WEST WENDOVER NEW FS #13

N. GENE L. JONES WAY, WEST WENDOVER, NV 89883

Job No: 22-002.00

Owner
CITY OF WEST WENDOVER

PHASE-1B DESIGN DEVELOPMENT

REVISIONS		
REV	DATE	DESCRIPTION

Sheet Title
OVERALL SITE PLAN

Date: MAY 3, 2023
Sheet No:
AS1.01

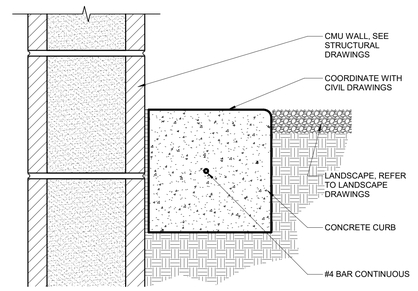

NOTE:
PROVIDE CONTROL JOINTS @ 10'-0" O.C., EXP. JOINTS @ 30'-0" O.C.

8 MOW CURB AT WALL / LANDSCAPE
SCALE: 3" = 1'-0"

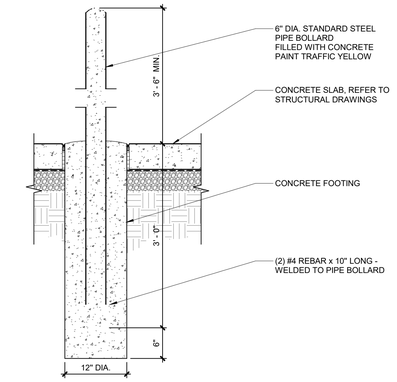

4 BUILDING BOLLARD
SCALE: 1" = 1'-0"

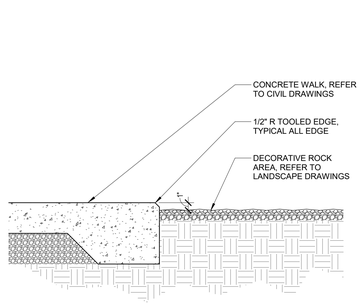

7 HARDSCAPE WELL TO CONCRETE
SCALE: 1 1/2" = 1'-0"

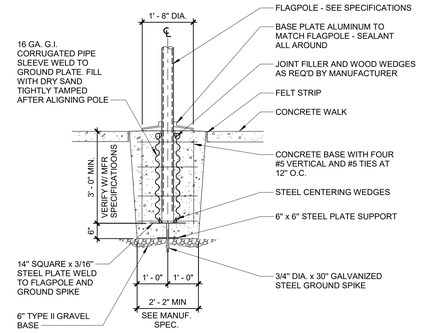

NOTE: CONCRETE FOOTING DIMENSIONS SHOWN ARE BASED UPON THE SPECIFIED FLAGPOLE MANUFACTURERS

3 FLAGPOLE FOOTING
SCALE: 1/2" = 1'-0"

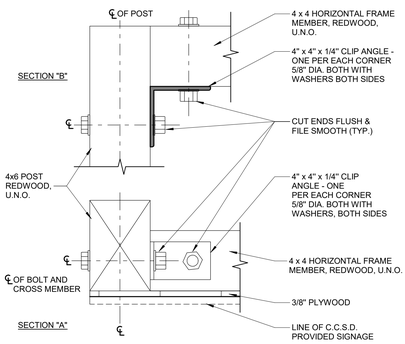

10 SIGN EDGE DETAIL
SCALE: 3" = 1'-0"

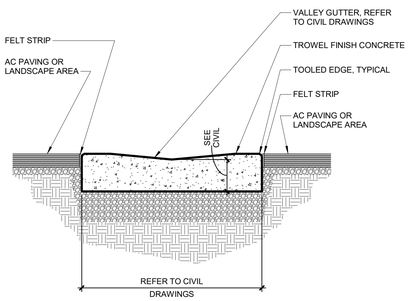

6 VALLEY GUTTER @ AC PAVING
SCALE: 1 1/2" = 1'-0"

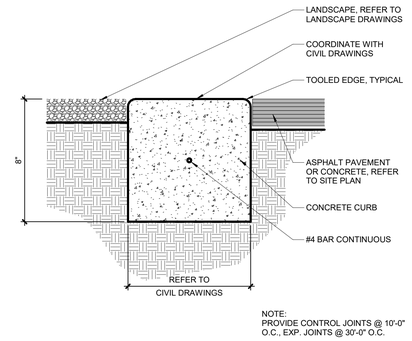

NOTE:
PROVIDE CONTROL JOINTS @ 10'-0" O.C., EXP. JOINTS @ 30'-0" O.C.

2 MOW CURB
SCALE: 3" = 1'-0"

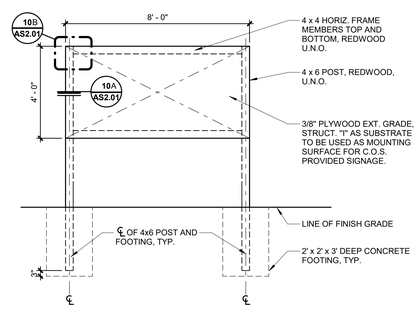

NOTES:
1. CREOSOTE TREAT 4x POST PRIOR TO EMBEDMENT INTO CONCRETE FOOTING.
2. PAINT SIGN FRAMING TO MATCH SIGN, U.N.O.
3. EDGE NAILING OF SIGNAGE: 10D @ 6" O.C., OR MACHINE WOOD SCREWS AS REQUIRED.
4. PROVIDE ONE SIGN LOCATED IN CONSTRUCTION AREA EACH PHASE.

9 CONSTRUCTION SIGN DETAIL
SCALE: 3/8" = 1'-0"

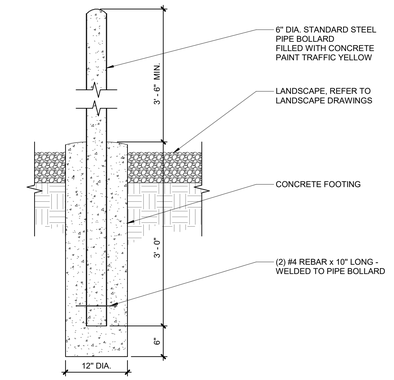

5 SITE BOLLARD
SCALE: 1" = 1'-0"

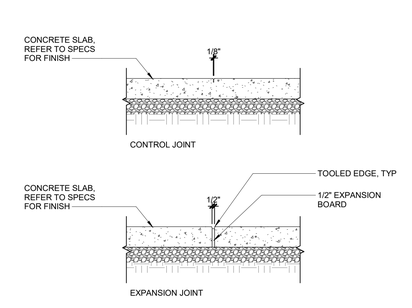

NOTE: SEE SITE PLAN FOR JOINT PATTERN AND STRUCTURAL DRAWINGS FOR MORE INFORMATION. SEE LANDSCAPE PLANS FOR OTHER EXTERIOR CONCRETE INFORMATION

1 JOINT DETAILS
SCALE: 1" = 1'-0"

tsk
314 South Water Street,
Suite 100
Henderson, NV 89015
phone: 702.456.3000
fax: 702.898.6209
www.tska.com

THESE DRAWINGS AND SPECIFICATIONS ARE THE PROPERTY OF TATE SNYDER KIMSEY ARCHITECTS AND MAY NOT BE REPRODUCED OR USED FOR ANY PURPOSE WITHOUT THE ARCHITECTS WRITTEN CONSENT. AS INSTRUMENTS OF SERVICE, THESE DOCUMENTS ARE NOT FINAL AND READY FOR USE, AND THEREFORE NOT VALID, UNLESS THEY ARE SEALED, SIGNED AND DATED.

Copyright, Ltd 2023

Consultant

PLEASE RECYCLE

Project
WEST WENDOVER NEW FS #13

N. GENE L. JONES WAY, WEST WENDOVER, NV 89883

Job No: 22-002.00

Owner
CITY OF WEST WENDOVER

PHASE-1B DESIGN DEVELOPMENT

REVISIONS		
REV	DATE	DESCRIPTION

Sheet Title
ARCHITECTURAL SITE DETAILS

Date: MAY 3, 2023
Sheet No:

AS2.01

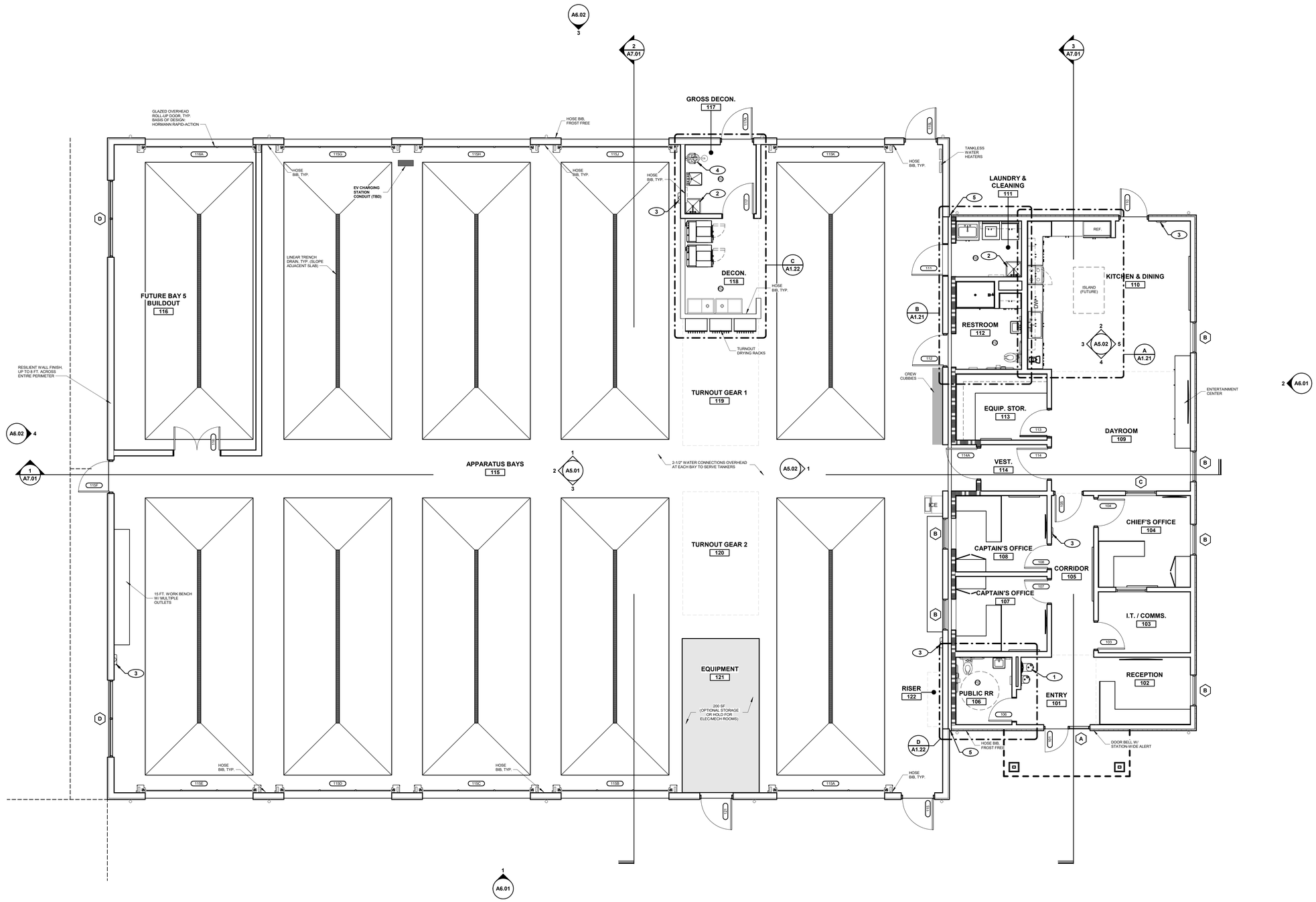

1 OVERALL FLOOR PLAN
SCALE: 3/16" = 1'-0"

NORTH 0' 3' 5' 11'

GENERAL NOTES

1. ALL DIMENSIONS ARE TAKEN FROM FACE OF STUD, MASONRY, OR CONCRETE UNLESS NOTED OTHERWISE.
2. REFER TO STRUCTURAL, MECHANICAL, PLUMBING, AND ELECTRICAL DRAWINGS FOR ADDITIONAL WORK NOT SHOWN ON THIS DRAWING.
3. REFER TO ELECTRICAL DRAWINGS FOR INFORMATION ON ELECTRICAL / DATA ROOMS.
4. REFER TO BUILDING SECTIONS AND WALL SECTIONS FOR WALL INFORMATION.
5. ALL EQUIPMENT (O.F.O.I. AND C.F.C.I.), SHALL COMPLY WITH ACCESSIBILITY REQUIREMENTS.
6. ALL PENETRATION IN PARTITION WALLS AT DATA / ELECTRICAL ROOMS TO BE FULLY SEALED TO MINIMIZE DUST INFILTRATION.
7. METAL WALL BACKING TO BE PROVIDED FOR ALL WALL MOUNTED EQUIPMENT.
8. CASTLE-CUT GYPSUM BOARD TO DECK AND SEAL AT AREAS WITHOUT CEILINGS.
9. FOR FLOORING TYPES AND CONTROL JOINTS: SEE FLOOR FINISH PLAN, ROOM FINISH SCHEDULE AND MATERIAL SCHEDULE.
10. REFER TO WALL PARTITION TYPES AND LIFE SAFETY DRAWINGS FOR RATING SEPARATIONS AND UL RATED DESIGN SHEET FOR REQUIRED FIRE RESISTIVE CONSTRUCTION.
11. FOR COMPLETE DIMENSIONS, REFER TO DIMENSION PLAN. FOR SIGNAGE LOCATIONS, REFER TO SIGNAGE PLAN.

KEYNOTES

1. DRINKING FOUNTAIN WITH BOTTLE FILLER, REFER TO PLUMBING DRAWINGS
2. MOP SINK, REFER TO PLUMBING DRAWINGS
3. FIRE EXTINGUISHER CABINET, REFER TO LIFE SAFETY PLAN
4. EMERGENCY EYE WASH AND SAFETY SHOWER STATION
5. SEISMIC JOINT, REFER TO STRUCTURAL DRAWINGS

tsk
314 South Water Street,
Suite 100
Henderson, NV 89015
phone: 702.456.3000
fax: 702.898.6209
www.tska.com

THESE DRAWINGS AND SPECIFICATIONS ARE THE PROPERTY OF TATE SNYDER KIMSEY ARCHITECTS AND MAY NOT BE REPRODUCED OR USED FOR ANY PURPOSE WITHOUT THE ARCHITECTS WRITTEN CONSENT. AS INSTRUMENTS OF SERVICE, THESE DOCUMENTS ARE NOT FINAL AND READY FOR USE, AND THEREFORE NOT VALID, UNLESS THEY ARE SEALED, SIGNED AND DATED.

Copyright, Ltd 2023

Consultant

PLEASE RECYCLE

Project
WEST WENDOVER NEW FS #13

N. GENE L. JONES WAY, WEST WENDOVER, NV 89883

Job No: 22-002.00

Owner
CITY OF WEST WENDOVER

PHASE-1B DESIGN DEVELOPMENT

REVISIONS

REV	DATE	DESCRIPTION

Sheet Title
OVERALL FLOOR PLAN

Date: MAY 3, 2023
Sheet No:
A1.01

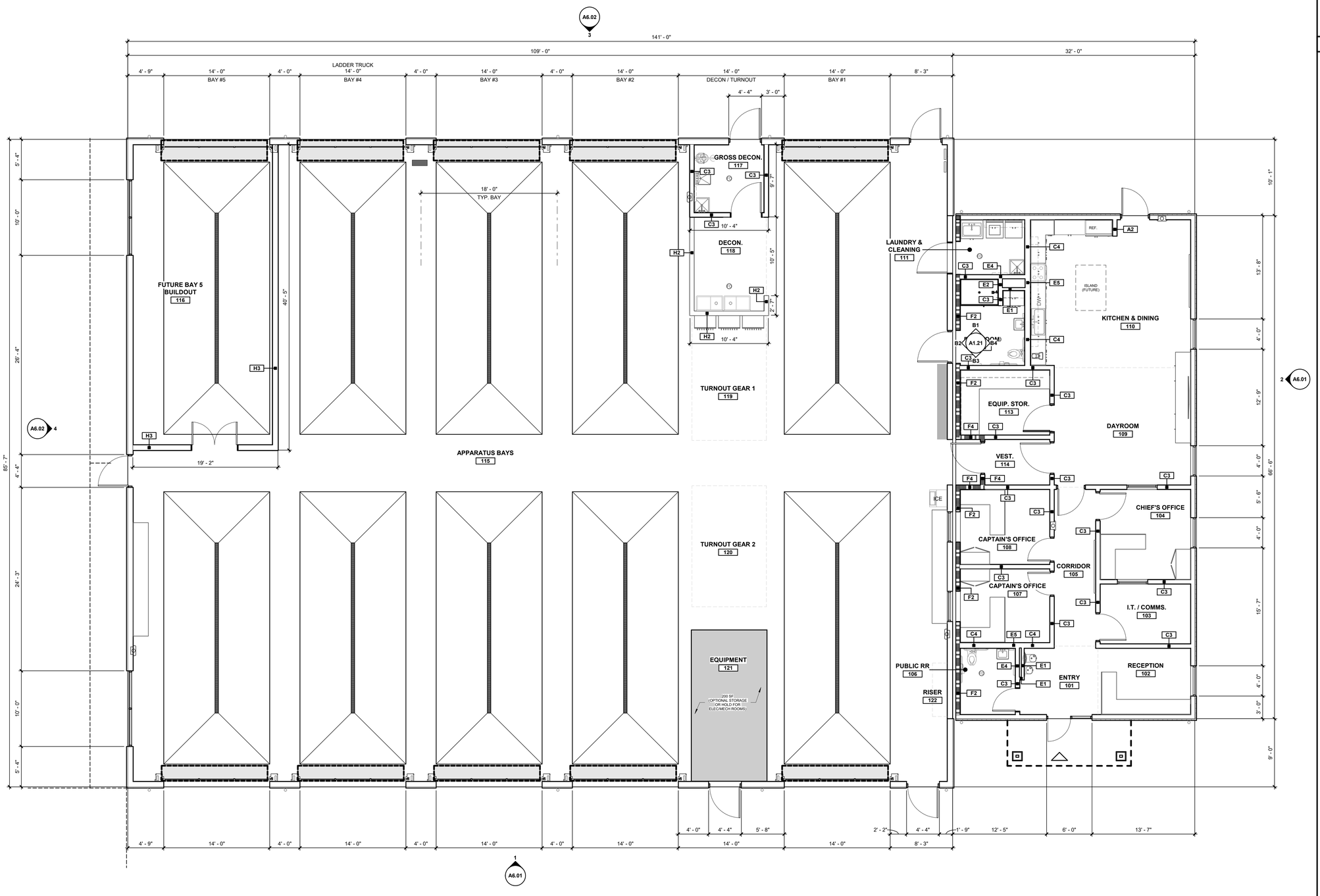

1 DIMENSION PLAN
SCALE: 3/16" = 1'-0"

NORTH 0' 3' 5' 11'

GENERAL NOTES

1. ALL DIMENSIONS ARE TAKEN FROM FACE OF STUD, MASONRY, CONCRETE, OR CENTERLINE OF COLUMN UNLESS NOTED OTHERWISE.
2. REFER TO ENLARGED RESTROOM PLANS FOR DIMENSIONS NOT SHOWN ON THE DIMENSION PLAN.
3. REFER TO SHEET A2.31 FOR PARTITION TYPES.
4. WHERE INTERIOR DOOR OPENINGS ARE NOT DIMENSIONED. INSTALL BUTT SIDE OF JAMB 6" FROM ADJACENT WALL, TYPICAL.
5. CONTRACTOR TO INSTALL ABUSE RESISTANT GYPSUM BOARD UP TO 6'-0" MINIMUM FROM FINISH FLOOR AT ALL CORRIDORS.
6. CONTRACTOR TO FIELD VERIFY ALL DIMENSIONS AND OPENINGS PRIOR TO INSTALLATION OF DOORS AND WINDOWS, ETC.

KEYNOTES

tsk
314 South Water Street,
Suite 100
Henderson, NV 89015
phone: 702.456.3000
fax: 702.898.6209
www.tska.com

THESE DRAWINGS AND SPECIFICATIONS ARE THE PROPERTY OF TATE SNYDER KIMSEY ARCHITECTS AND MAY NOT BE REPRODUCED OR USED FOR ANY PURPOSE WITHOUT THE ARCHITECTS WRITTEN CONSENT. AS INSTRUMENTS OF SERVICE, THESE DOCUMENTS ARE NOT FINAL AND READY FOR USE, AND THEREFORE NOT VALID, UNLESS THEY ARE SEALED, SIGNED AND DATED.
Copyright, Ltd 2023

Consultant

PLEASE RECYCLE

Project
WEST WENDOVER NEW FS #13

N. GENE L. JONES WAY, WEST WENDOVER, NV 89883

Job No: 22-002.00

Owner
CITY OF WEST WENDOVER

PHASE-1B DESIGN DEVELOPMENT

REVISIONS		
REV	DATE	DESCRIPTION

Sheet Title
DIMENSION PLAN

Date: MAY 3, 2023
Sheet No:
A1.11

TOILET ACCESSORIES SCHEDULE				
SYMBOL	DESCRIPTION	MANUFACTURER (BASIS OF DESIGN)	MFR NO.	PROVIDED/INSTALLED
TA-1	1 1/4" Diameter Stainless Steel Grab Bars with Snap Flange	Bobrick Washroom Equipment, Inc.	B-5806 Series	
TA-2	1 1/4" Diameter Stainless Steel Grab Bars with Snap Flange	Bobrick Washroom Equipment, Inc.	B-5806 Series	
TA-3	1 1/4" Diameter Stainless Steel Grab Bars with Snap Flange	Bobrick Washroom Equipment, Inc.	B-5806 Series	
TA-4	Contura Series Surface Mounted Soap Dispenser	Bobrick Washroom Equipment, Inc.	B-4112	
TA-5	Glass Mirror with Stainless Steel Angle Frame	Bobrick Washroom Equipment, Inc.	B-165 Series	
TA-6	Classic Series Surface Mounted Seat Cover Dispenser	Bobrick Washroom Equipment, Inc.	B-221	
TA-7	Paper Towel Dispenser And Waste Receptacle - Semi-Recessed	Bobrick Washroom Equipment, Inc.	B-38032	
TA-8	Surface-Mounted Multi-Roll Toilet Tissue Dispenser	Bobrick Washroom Equipment, Inc.	B-2888	
TA-9	Surface-Mounted Sanitary Napkin Disposal	Bobrick Washroom Equipment, Inc.	B-270	
TA-10	Stainless Steel Mop and Broom Holder	Bobrick Washroom Equipment, Inc.	B-223	

CASEWORK SCHEDULE				
	SIZE			
CDS	W	H	D	REMARKS
CW_Counter Top-L Shaped	34"	36"	24"	
100M	48"	31"	24"	
101	24"	31"	24"	
152	36"	36"	30"	
152	42"	36"	24"	
211	12"	36"	24"	
211	18"	36"	24"	
222	30"	36"	24"	
222	34"	36"	24"	
301	12"	30"	12"	
301	18"	30"	12"	
302	30"	12"	12"	
302	30"	30"	12"	
302	34"	30"	12"	
302	42"	22"	12"	
302	42"	30"	12"	
4021	48"	84"	24"	
402		84"		

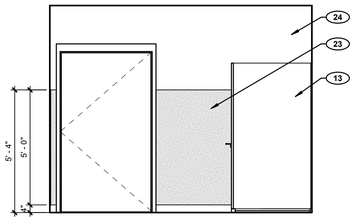

B2 RESTROOM 112 - WEST
SCALE: 3/8" = 1'-0"

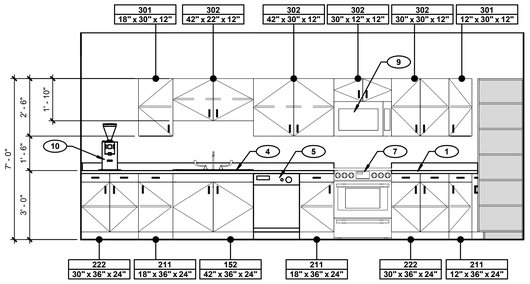

A2 KITCHEN & DINING 110 - WEST
SCALE: 3/8" = 1'-0"

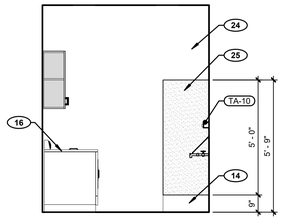

B8 LAUNDRY & CLEANING 111 - EAST
SCALE: 3/8" = 1'-0"

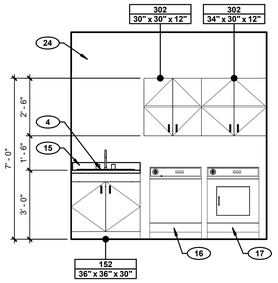

B5 LAUNDRY & CLEANING 111 - NORTH
SCALE: 3/8" = 1'-0"

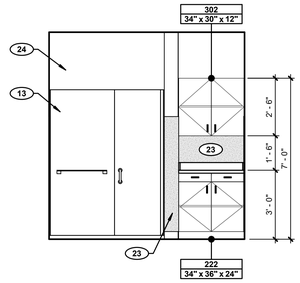

B1 RESTROOM 112 - NORTH
SCALE: 3/8" = 1'-0"

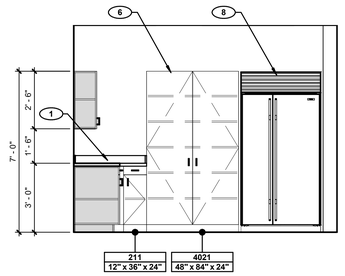

A1 KITCHEN & DINING 110 - NORTH
SCALE: 3/8" = 1'-0"

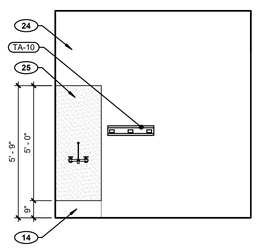

B7 LAUNDRY & CLEANING 111 - SOUTH
SCALE: 3/8" = 1'-0"

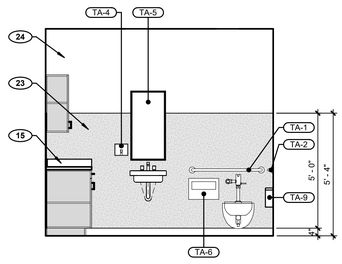

B4 RESTROOM 112 - EAST
SCALE: 3/8" = 1'-0"

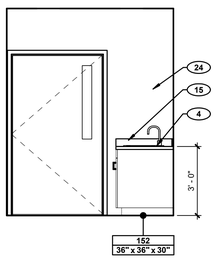

B6 LAUNDRY & CLEANING 111 - WEST
SCALE: 3/8" = 1'-0"

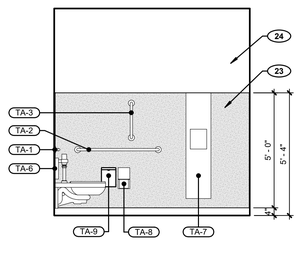

B3 RESTROOM 112 - SOUTH
SCALE: 3/8" = 1'-0"

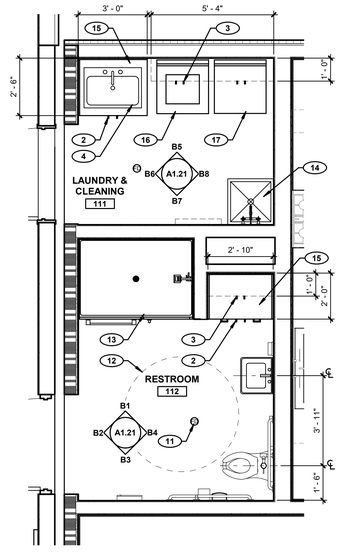

B ENLARGED PLAN - RESTROOM 112 / LAUNDRY & CLEANING 111
SCALE: 3/8" = 1'-0"

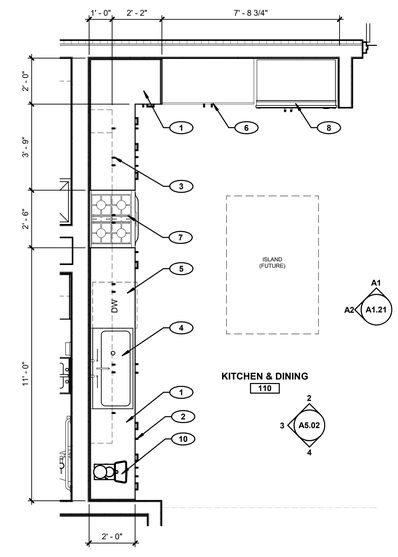

A ENLARGED PLAN - KITCHEN & DINING 110
SCALE: 3/8" = 1'-0"

GENERAL NOTES

1. REFER TO GENERAL ACCESSIBILITY DETAILS IN G1.0X SERIES FOR TYPICAL ACCESSIBLE FIXTURE, GRAB BAR AND ACCESSORY MOUNTING HEIGHTS AND LOCATIONS.
2. REFER TO SHEET A2.01 FOR ROOM FINISH SCHEDULE AND MATERIAL SCHEDULE.
3. REFER TO DIMENSION PLAN FOR WALL PARTITION TYPES. REFER TO SHEET A2.35 FOR PARTITION DETAILS.
4. REFER TO A8.XX SERIES FOR CASEWORK PLANS AND ELEVATIONS.
5. FURNITURE SHOWN FOR REFERENCE ONLY. FURNITURE NOT IN CONTRACT.
6. FD - FLOOR DRAINS TO SLOPE 1/8" PER FOOT.
7. "ACC" DENOTES AN ACCESSIBLE FIXTURE. REFER TO SHEET G1.03.
8. METAL WALL BACKING TO BE PROVIDED FOR ALL WALL MOUNTED EQUIPMENT.

KEYNOTES

1. STAINLESS STEEL COUNTERTOP WITH BACKSPLASH AND MARINE EDGE
2. BASE CABINET, REFER TO CASEWORK SCHEDULE AND DETAILS
3. UPPER CABINET, REFER TO CASEWORK SCHEDULE AND DETAILS
4. STAINLESS STEEL SINK, REFER TO PLUMBING DRAWINGS
5. DISHWASHER, REFER TO FURNITURE AND EQUIPMENT PLAN
6. TALL PANTRY CABINET, REFER TO CASEWORK SCHEDULE AND DETAILS
7. 30" GAS RANGE/OVEN
8. REFRIGERATOR, SUBZERO
9. OVER-THE-RANGE MICROWAVE OVEN, REFER TO FURNITURE AND EQUIPMENT PLAN
10. COFFEE STATION
11. FLOOR DRAIN, REFER TO PLUMBING DRAWINGS
12. 5' - 0" ACCESSIBLE TURN RADIUS, TYPICAL
13. PRE-FABRICATED SHOWER UNIT
14. MOP SINK, REFER TO PLUMBING DRAWINGS
15. SOLID SURFACE COUNTERTOP WITH BACKSPLASH
16. WASHER, REFER TO FURNITURE AND EQUIPMENT PLAN
17. DRYER, REFER TO FURNITURE AND EQUIPMENT PLAN
18. DRINKING FOUNTAIN WITH BOTTLE FILLER, REFER TO PLUMBING DRAWINGS
19. WALL-HUNG SERVICE SINK WITH DRAINBOARD, REFER TO PLUMBING DRAWINGS
20. WASHER / EXTRACTOR
21. EMERGENCY EYE WASH AND SAFETY SHOWER STATION
22. UTILITY SINK, REFER TO PLUMBING DRAWINGS
23. FRL - FIBER REINFORCED LAMINATE (W-5), REFER TO MATERIAL SCHEDULE
24. PAINTED GYPSUM BOARD, REFER TO ROOM FINISH SCHEDULE
25. FRP - FIBER REINFORCED PANEL (W-4), REFER TO MATERIAL SCHEDULE
26. PPE HEATED GEAR DRYING RACK

tsk
314 South Water Street,
Suite 100
Henderson, NV 89015
phone: 702.456.3000
fax: 702.898.6209
www.tska.com

THESE DRAWINGS AND SPECIFICATIONS ARE THE PROPERTY OF TATE SNYDER KIMSEY ARCHITECTS AND MAY NOT BE REPRODUCED OR USED FOR ANY PURPOSE WITHOUT THE ARCHITECTS WRITTEN CONSENT. AS INSTRUMENTS OF SERVICE, THESE DOCUMENTS ARE NOT FINAL AND READY FOR USE, AND THEREFORE NOT VALID, UNLESS THEY ARE SEALED, SIGNED AND DATED.

Copyright, Ltd 2023

Consultant

PLEASE RECYCLE

Project
WEST WENDOVER NEW FS #13

N. GENE L. JONES WAY, WEST WENDOVER, NV 89883

Job No: 22-002.00

Owner
CITY OF WEST WENDOVER

PHASE-1B DESIGN DEVELOPMENT

REVISIONS		
REV	DATE	DESCRIPTION

Sheet Title
ENLARGED PLANS AND ELEVATIONS

Date: MAY 3, 2023

Sheet No:
A1.21

TOILET ACCESSORIES SCHEDULE				
SYMBOL	DESCRIPTION	MANUFACTURER (BASIS OF DESIGN)	MFR NO.	PROVIDED/INSTALLED
TA-1	1 1/4" Diameter Stainless Steel Grab Bars with Snap Flange	Bobrick Washroom Equipment, Inc.	B-5806 Series	
TA-2	1 1/4" Diameter Stainless Steel Grab Bars with Snap Flange	Bobrick Washroom Equipment, Inc.	B-5806 Series	
TA-3	1 1/4" Diameter Stainless Steel Grab Bars with Snap Flange	Bobrick Washroom Equipment, Inc.	B-5806 Series	
TA-4	Contura Series Surface Mounted Soap Dispenser	Bobrick Washroom Equipment, Inc.	B-4112	
TA-5	Glass Mirror with Stainless Steel Angle Frame	Bobrick Washroom Equipment, Inc.	B-165 Series	
TA-6	Classic Series Surface Mounted Seat Cover Dispenser	Bobrick Washroom Equipment, Inc.	B-221	
TA-7	Paper Towel Dispenser And Waste Receptacle - Semi-Recessed	Bobrick Washroom Equipment, Inc.	B-38032	
TA-8	Surface-Mounted Multi-Roll Toilet Tissue Dispenser	Bobrick Washroom Equipment, Inc.	B-2888	
TA-9	Surface-Mounted Sanitary Napkin Disposal	Bobrick Washroom Equipment, Inc.	B-270	
TA-10	Stainless Steel Mop and Broom Holder	Bobrick Washroom Equipment, Inc.	B-223	

CASEWORK SCHEDULE				
	SIZE			
CDS	W	H	D	REMARKS
CW_Counter Top-L Shaped	34"	36"	24"	
100M	48"	31"	24"	
101	24"	31"	24"	
152	36"	36"	30"	
152	42"	36"	24"	
211	12"	36"	24"	
211	18"	36"	24"	
222	30"	36"	24"	
222	34"	36"	24"	
301	12"	30"	12"	
301	18"	30"	12"	
302	30"	12"	12"	
302	30"	30"	12"	
302	34"	30"	12"	
302	42"	22"	12"	
302	42"	30"	12"	
4021	48"	84"	24"	
402		84"		

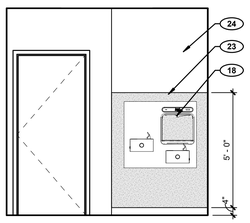

D1 ENTRY 101 - WEST
SCALE: 3/8" = 1'-0"

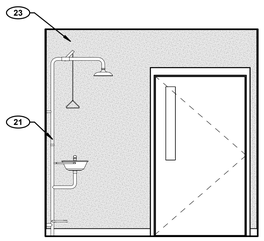

C5 GROSS DECON 117 - NORTH
SCALE: 3/8" = 1'-0"

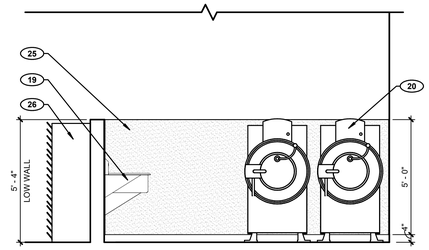

C2 DECON 118 - WEST
SCALE: 3/8" = 1'-0"

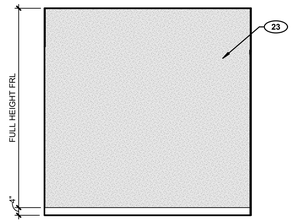

C8 GROSS DECON 117 - EAST
SCALE: 3/8" = 1'-0"

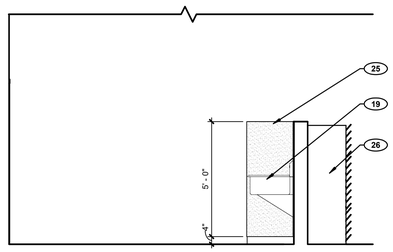

C4 DECON 118 - EAST
SCALE: 3/8" = 1'-0"

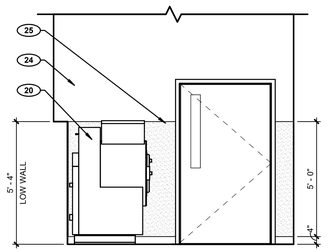

C1 DECON 118 - NORTH
SCALE: 3/8" = 1'-0"

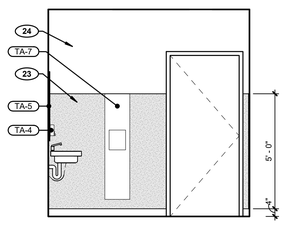

D5 PUBLIC RR 106 - EAST
SCALE: 3/8" = 1'-0"

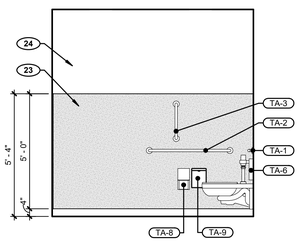

D3 PUBLIC RR 106 - WEST
SCALE: 3/8" = 1'-0"

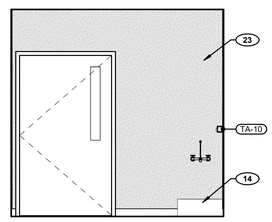

C7 GROSS DECON 117 - SOUTH
SCALE: 3/8" = 1'-0"

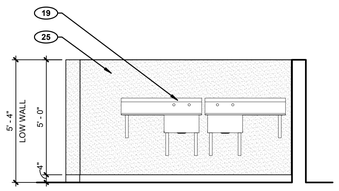

C3 DECON 118 - SOUTH
SCALE: 3/8" = 1'-0"

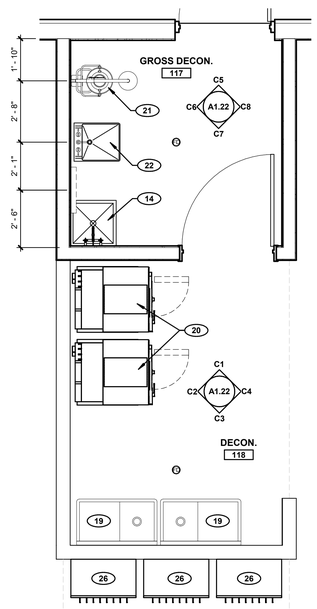

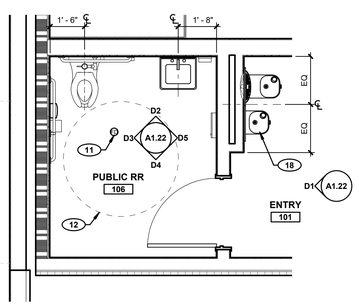

D ENLARGED PLAN - PUBLIC RR 106
SCALE: 3/8" = 1'-0"

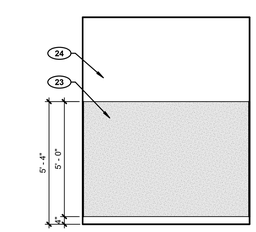

D4 PUBLIC RR 106 - SOUTH
SCALE: 3/8" = 1'-0"

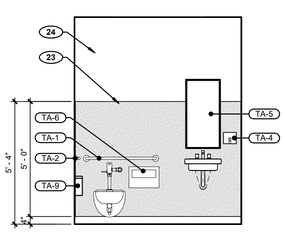

D2 PUBLIC RR 106 - NORTH
SCALE: 3/8" = 1'-0"

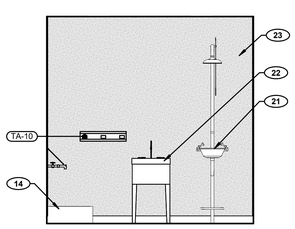

C6 GROSS DECON 117 - WEST
SCALE: 3/8" = 1'-0"

ENLARGED PLAN - GROSS DECON 117 / DECON 118
C SCALE: 3/8" = 1'-0"

GENERAL NOTES

1. REFER TO GENERAL ACCESSIBILITY DETAILS IN G1.0X SERIES FOR TYPICAL ACCESSIBLE FIXTURE, GRAB BAR AND ACCESSORY MOUNTING HEIGHTS AND LOCATIONS.
2. REFER TO SHEET A2.01 FOR ROOM FINISH SCHEDULE AND MATERIAL SCHEDULE.
3. REFER TO DIMENSION PLAN FOR WALL PARTITION TYPES. REFER TO SHEET A2.35 FOR PARTITION DETAILS.
4. REFER TO A8.XX SERIES FOR CASEWORK PLANS AND ELEVATIONS.
5. FURNITURE SHOWN FOR REFERENCE ONLY. FURNITURE NOT IN CONTRACT.
6. FD - FLOOR DRAINS TO SLOPE 1/8" PER FOOT.
7. "ACC" DENOTES AN ACCESSIBLE FIXTURE. REFER TO SHEET G1.03.
8. METAL WALL BACKING TO BE PROVIDED FOR ALL WALL MOUNTED EQUIPMENT.

KEYNOTES

1. STAINLESS STEEL COUNTERTOP WITH BACKSPLASH AND MARINE EDGE
2. BASE CABINET, REFER TO CASEWORK SCHEDULE AND DETAILS
3. UPPER CABINET, REFER TO CASEWORK SCHEDULE AND DETAILS
4. STAINLESS STEEL SINK, REFER TO PLUMBING DRAWINGS
5. DISHWASHER, REFER TO FURNITURE AND EQUIPMENT PLAN
6. TALL PANTRY CABINET, REFER TO CASEWORK SCHEDULE AND DETAILS
7. 30" GAS RANGE/OVEN
8. REFRIGERATOR, SUBZERO
9. OVER-THE-RANGE MICROWAVE OVEN, REFER TO FURNITURE AND EQUIPMENT PLAN
10. COFFEE STATION
11. FLOOR DRAIN, REFER TO PLUMBING DRAWINGS
12. 5' - 0" ACCESSIBLE TURN RADIUS, TYPICAL
13. PRE-FABRICATED SHOWER UNIT
14. MOP SINK, REFER TO PLUMBING DRAWINGS
15. SOLID SURFACE COUNTERTOP WITH BACKSPLASH
16. WASHER, REFER TO FURNITURE AND EQUIPMENT PLAN
17. DRYER, REFER TO FURNITURE AND EQUIPMENT PLAN
18. DRINKING FOUNTAIN WITH BOTTLE FILLER, REFER TO PLUMBING DRAWINGS
19. WALL-HUNG SERVICE SINK WITH DRAINBOARD, REFER TO PLUMBING DRAWINGS
20. WASHER / EXTRACTOR
21. EMERGENCY EYE WASH AND SAFETY SHOWER STATION
22. UTILITY SINK, REFER TO PLUMBING DRAWINGS
23. FRL - FIBER REINFORCED LAMINATE (W-5), REFER TO MATERIAL SCHEDULE
24. PAINTED GYPSUM BOARD, REFER TO ROOM FINISH SCHEDULE
25. FRP - FIBER REINFORCED PANEL (W-4), REFER TO MATERIAL SCHEDULE
26. PPE HEATED GEAR DRYING RACK

tsk
314 South Water Street,
Suite 100
Henderson, NV 89015
phone: 702.456.3000
fax: 702.898.6209
www.tska.com

THESE DRAWINGS AND SPECIFICATIONS ARE THE PROPERTY OF TATE SNYDER KIMSEY ARCHITECTS AND MAY NOT BE REPRODUCED OR USED FOR ANY PURPOSE WITHOUT THE ARCHITECTS WRITTEN CONSENT. AS INSTRUMENTS OF SERVICE, THESE DOCUMENTS ARE NOT FINAL AND READY FOR USE, AND THEREFORE NOT VALID, UNLESS THEY ARE SEALED, SIGNED AND DATED.

Copyright, Ltd 2023

Consultant

PLEASE RECYCLE

Project
WEST WENDOVER NEW FS #13

N. GENE L. JONES WAY, WEST WENDOVER, NV 89883

Job No: 22-002.00

Owner
CITY OF WEST WENDOVER

PHASE-1B DESIGN DEVELOPMENT

REVISIONS		
REV	DATE	DESCRIPTION

Sheet Title
ENLARGED PLANS AND ELEVATIONS

Date: MAY 3, 2023
Sheet No:
A1.22

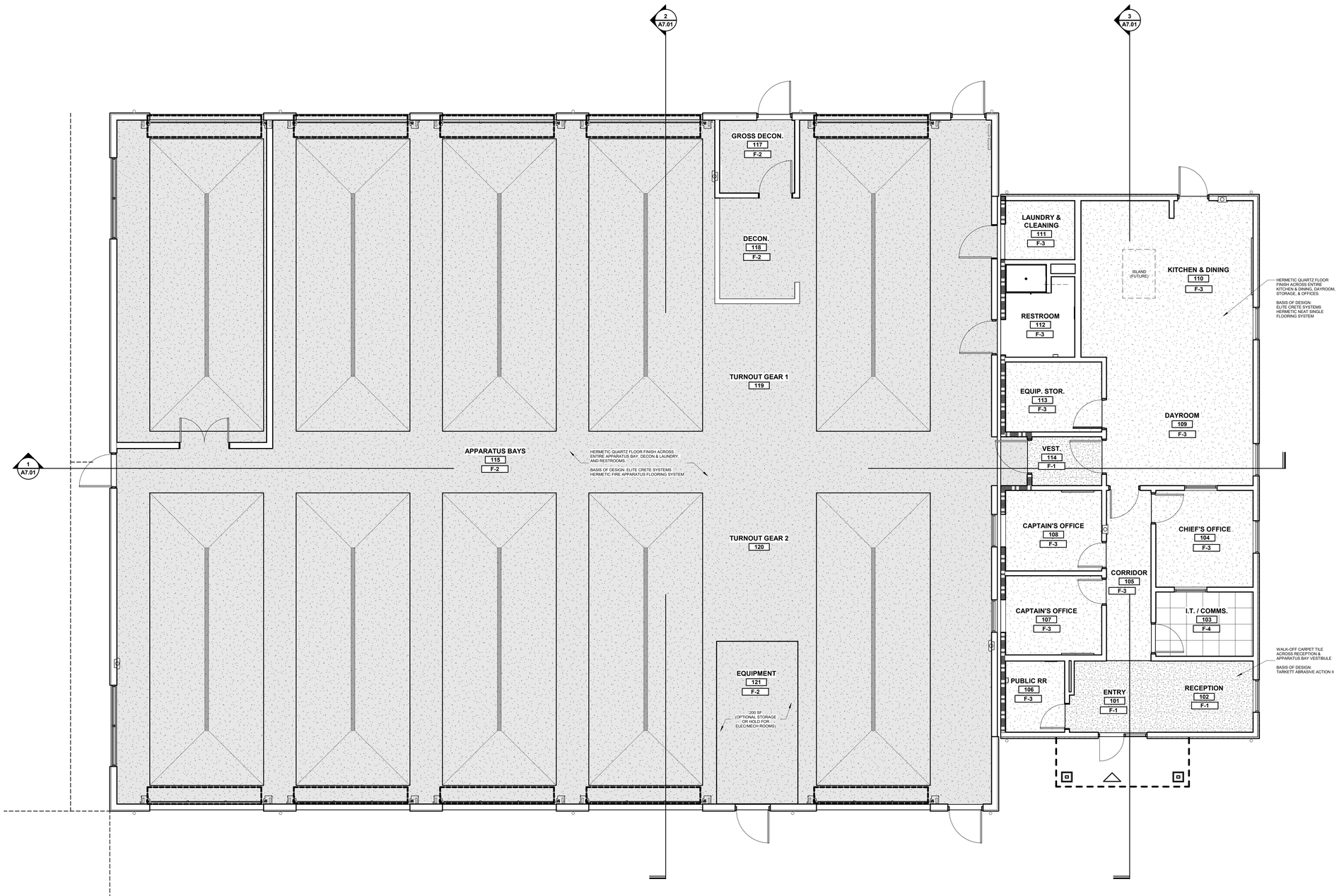

1 FLOOR FINISH PLAN
SCALE: 3/16" = 1'-0"

NORTH 0' 3' 5' 11'

GENERAL NOTES

1. ALL DIMENSIONS ARE TAKEN FROM GRIDLINES, FACE OF STUD, MASONRY OR CONCRETE UNLESS NOTED OTHERWISE.
2. REFER TO SHEET A2.01 FOR ROOM FINISH SCHEDULE AND MATERIAL SCHEDULE.
3. CORNERGUARD CG-1 ON EVERY WALL OUTSIDE CORNER, UNLESS NOTED OTHERWISE.
4. REFER TO A8.XX SERIES FOR CASEWORK PLANS AND ELEVATIONS.
5. REFER TO A2.4X SERIES FOR INTERIOR DETAILS.

KEYNOTES

LEGEND

- 2' X 2' WALK-OFF CARPET TILE **F-1**
- RESINOUS EPOXY FLOORING - DARK GRAY **F-2**
- RESINOUS EPOXY FLOORING - LIGHT GRAY **F-3**
- STATIC DISSIPATIVE VCT **F-4**

tsk
314 South Water Street,
Suite 100
Henderson, NV 89015
phone: 702.456.3000
fax: 702.898.6209
www.tska.com

THESE DRAWINGS AND SPECIFICATIONS ARE THE PROPERTY OF TATE SNYDER KIMSEY ARCHITECTS AND MAY NOT BE REPRODUCED OR USED FOR ANY PURPOSE WITHOUT THE ARCHITECTS WRITTEN CONSENT. AS INSTRUMENTS OF SERVICE, THESE DOCUMENTS ARE NOT FINAL AND READY FOR USE, AND THEREFORE NOT VALID, UNLESS THEY ARE SEALED, SIGNED AND DATED.

Copyright, Ltd 2023

Consultant

PLEASE RECYCLE

Project
WEST WENDOVER NEW FS #13

N. GENE L. JONES WAY, WEST WENDOVER, NV 89883

Job No: 22-002.00

Owner
CITY OF WEST WENDOVER

PHASE-1B DESIGN DEVELOPMENT

REVISIONS		
REV	DATE	DESCRIPTION

Sheet Title
FINISH PLAN

Date: MAY 3, 2023
Sheet No:
A1.31

ROOM FINISH SCHEDULE

ROOM NO	ROOM NAME	FLOORING		CEILING	WALLS (ORIENTATION IS BASED ON PROJECT NORTH)				COMMENTS
		MATERIAL	BASE	MATERIAL	NORTH MATERIAL	WEST MATERIAL	SOUTH MATERIAL	EAST MATERIAL	
LEVEL 1									
101	ENTRY								
102	RECEPTION	F-1	B-1	C-1	W-6	W-1 / W-5	W-1 / W-2	W-1	
103	I.T. / COMMS.	F-4	B-1	C-1	W-1 / W-7	W-1 / W-7	W-1 / W-7	W-1 / W-7	
104	CHIEF'S OFFICE	F-3	B-1	C-1	W-1	W-1	W-6	W-1	
106	PUBLIC RR	F-3	B-3	C-3	W-1 / W-5	W-1 / W-5	W-1 / W-5	W-1 / W-5	
107	CAPTAIN'S OFFICE	F-3	B-1	C-1	W-1	W-1	W-1	W-1	
108	CAPTAIN'S OFFICE	F-3	B-1	C-1	W-1	W-1	W-1	W-1	
109	DAYROOM	F-3	B-1	C-1	-	W-1	W-6	W-1	
110	KITCHEN & DINING	F-3	B-1	C-2	W-1	W-1 / W-5	-	W-1	
111	LAUNDRY & CLEANING	F-2	B-2	C-3	W-1 / W-4	W-1 / W-4	W-1 / W-4	W-1 / W-4	
112	RESTROOM	F-2	B-2	C-3	W-1 / W-5	W-1 / W-5	W-1 / W-5	W-1 / W-5	
113	EQUIP. STOR.	F-1	B-1	C-3	W-1	W-1	W-1	W-1	
115	APPARATUS BAYS	F-2	B-2	IMP-2	IMP-1A / IMP-1B	IMP-1A / IMP-1B	IMP-1A / IMP-1B	IMP-1A / IMP-1B	
116	FUTURE BAY 5 BUILDOUT								
117	GROSS DECON.	F-2	B-2	C-3	W-1 / W-4	W-1 / W-4	W-1 / W-4	W-1 / W-4	
118	DECON.	F-2	B-2	C-3	W-1 / W-4	W-1 / W-4	W-1 / W-4	W-1 / W-4	
119	TURNOUT GEAR 1	F-2	-	IMP-2	-	-	-	-	
120	TURNOUT GEAR 2	F-2	-	IMP-2	-	-	-	-	
121	EQUIPMENT	F-2	B-1	IMP-2	-	-	-	-	
122	RISER	F-2	B-2	-					



BUILDING MATERIAL SCHEDULE - INTERIOR

KEY	DESCRIPTION	MANUFACTURER (BASIS OF DESIGN)	MODEL NUMBER	COLOR	REMARKS
BASE					
B-1	RUBBER WALL BASE	TARKETT	BASEWORKS - TYPE TS 4"	63 BURNT UMBER	CONFIRM EXISTING CITY HALL MATERIALS
B-2	RESINOUS EPOXY COVE BASE	ELITE CRETE SYSTEMS	HERMETIC FIRE APPARATUS FLOORING SYSTEM	DARK GRAY	@ APPARATUS BAYS
B-3	RESINOUS EPOXY COVE BASE	ELITE CRETE SYSTEMS	HERMETIC NEAT SINGLE FLOORING SYSTEM	LIGHT GRAY	
CEILING					
C-1	ACOUSTICAL CEILING TILE	USG	24" x 48" x 1" HALCYON #98241 LAY-IN SQUARE EDGE	WHITE PANEL / WHITE GRID	15/16" DONN DX GRID, SQ. EDGE
C-2	ACOUSTICAL CEILING TILE	USG	24" x 48" x 5/8" CLEAN ROOM PANEL #56091 NON-PERF. LAY-IN	WHITE PANEL / WHITE GRID	15/16" DONN DX GRID, SQ. EDGE (IN KITCHEN)
C-3	PAINTED GYPSUM BOARD			PC-2, U.N.O. - SEE RCP	
CORNER GUARDS					
CG-1	CORNER GUARD	CS GROUP - ACROVYN	CO-8 4FT.	STAINLESS STEEL	@ ALL OUTSIDE CORNERS, SURFACE MOUNT
COUNTERTOP					
SS-1	SOLID SURFACE	CORIAN	3/4" QUARTZ	SPARKLING GRANITA	@ RECEPTION COUNTER, RR SINKS & COUNTERS
SS-2	STAINLESS STEEL	TBD	TBD	STAINLESS STEEL	@ KITCHEN & WORK BENCH COUNTERS (MARINE EDGE)
FLOORING					
F-1	WALK-OFF CARPET	TARKETT	ABRASIVE ACTION II 02578	WINTER GRAY 19103	@ ENTRY & VESTIBULE
F-2	RESINOUS EPOXY FLOORING	ELITE CRETE SYSTEMS	HERMETIC FIRE APPARATUS FLOORING SYSTEM	DARK GRAY FIELD W/ SAFETY YELLOW AISLES & STRIPING	@ APPARATUS BAYS
F-3	RESINOUS EPOXY FLOORING	ELITE CRETE SYSTEMS	HERMETIC NEAT SINGLE FLOORING SYSTEM	LIGHT GRAY	
F-4	STATIC DISSIPATIVE VCT	TARKETT	PRIMO SD - STATIC CONTROL	DARK COOL GREY 0563	@ I.T. / COMMS. ROOM
WALLS					
W-1	PAINTED GYPSUM BOARD				SEE PAINT COLOR SCHEDULE, FINISH PLANS, AND INTERIOR ELEVATIONS. ABUSE RESISTANT UP TO 6FT. A.F.F. IN CORRIDORS.
W-2	STOREFRONT			ANODIZED ALUMINUM	
W-3	TACKABLE WALL SURFACE	KOROSEAL	WALLTALKERS TAC-WALL	09 - ONYX 48"	W/ ALUMINUM J-TRIM
W-4	FIBER REINFORCED PANEL (FRP)	PANOLAM		WHITE	@ DECON. & LAUNDRY AREAS
W-5	FIBER REINFORCED LAMINATE (FRL)	PANOLAM	PIONITE (5'-0" x 10'-0")	AG750 - DAYDREAMING (SD)	@ VESTIBULE, RESTROOMS & KITCHEN
W-6	LEVEL-5 FINISH GYPSUM BOARD WALL		VINYL GRAPHIC LOCATION (TBD)	SEE VINYL GRAPHIC SCHEDULE & DIGITAL GRAPHICS SPECIFICATION	
W-7	PLYWOOD BACKBOARD				@ I.T. / COMMS. ROOM
WINDOW COVERINGS					
WC-1	MECHOSHADE	MECHOI5 SYSTEM (MANUAL)	SOHO 1600	LIGHT GRAY - 1603 (3% OPEN)	@ OFFICE, DAYROOM, & KITCHEN WINDOWS (DARK GRAY TRIM)

BUILDING MATERIAL SCHEDULE - EXTERIOR

KEY	DESCRIPTION	MANUFACTURER (BASIS OF DESIGN)	MODEL NUMBER	COLOR	REMARKS
CLAY BRICK					
CB-1	STRUCTURAL CLAY BRICK	INTERSTATE BRICK	ATLAS | 8" x 2-1/4" x 16" CENTER SCORED	TERRA COTTA - MATTE	EXTERIOR MONUMENT SIGN W/ CONCRETE CAP
EIFS					
CS-1	EXTERIOR INSULATION FINISH SYSTEM	DRYVIT	SANDBLAST	COLOR TO MATCH PC-5	SEE EXTERIOR ELEVATIONS
CS-2	EXTERIOR INSULATION FINISH SYSTEM	DRYVIT	SANDBLAST	COLOR TO MATCH PC-6	SEE EXTERIOR ELEVATIONS
INSULATED METAL PANEL					
IMP-1A	INSULATED METAL PANEL	NUCOR	HE40 | 2.5" R-20 WALL (HEAVY EMBOSSED) - SANTA FE STYLE	DESERT SAND	FLAT PANEL W/ TEXTURE | DOWNSPOUTS TO MATCH
IMP-1B	INSULATED METAL PANEL	NUCOR	HE40 | 2.5" R-20 WAINSCOT (HEAVY EMBOSSED) - SANTA FE STYLE	SURREY BEIGE	FLAT PANEL W/ TEXTURE | DOWNSPOUTS TO MATCH
IMP-2	INSULATED METAL PANEL	NUCOR	SR2 | 4" R-32 STANDING SEAM ROOF	TERRA COTTA	HIDDEN FASTENER TRIM & GUTTERS TO MATCH
STANDING SEAM ROOF					
SR-1	STANDING SEAM ROOF	NUCOR	CRF STANDING SEAM ROOF SYSTEM	TERRA COTTA	HIDDEN FASTENER TRIM & GUTTERS TO MATCH

PAINT COLOR SCHEDULE

KEY	DESCRIPTION	COLOR	LOCATION	SHEEN
PC-1	WHITE	SW 7757 HIGHLY REFLECTIVE WHITE	INTERIOR GYP. BOARD WALLS (FIELD), OUTLETS & FACEPLATES TO MATCH	EGGSHELL
PC-2	WHITE	SW 7007 CEILING BRIGHT WHITE	INTERIOR GYP. BOARD CEILINGS, EXPOSED STRUCTURE, EXPOSED DUCTWORK & HVAC GRILLES, U.N.O., EXTERIOR SOFFITS	SEMI-GLOSS
PC-3	DARK GRAY	SW 7674 PEPPERCORN	INTERIOR METAL DOORS & METAL DOOR FRAMES	GLOSS
PC-4	DARK BROWN	SW 6160 BEST BRONZE	EXTERIOR METAL DOORS & METAL DOOR FRAMES	GLOSS
PC-5	LIGHT BROWN	SW 9109 NATURAL LINEN	EXTERIOR EIFS FIELD COLOR	MATTE
PC-6	DARK BROWN	SW 9088 UTAUPEIA	EXTERIOR EIFS FIELD COLOR	MATTE

CMU PAINT COLOR SCHEDULE

KEY	DESCRIPTION	COLOR	LOCATION
BC-1			
BC-2			

tsk
314 South Water Street,
Suite 100
Henderson, NV 89015
phone: 702.456.3000
fax: 702.898.6209
www.tska.com

THESE DRAWINGS AND SPECIFICATIONS ARE THE PROPERTY OF TATE SNYDER KIMSEY ARCHITECTS AND MAY NOT BE REPRODUCED OR USED FOR ANY PURPOSE WITHOUT THE ARCHITECTS WRITTEN CONSENT. AS INSTRUMENTS OF SERVICE, THESE DOCUMENTS ARE NOT FINAL AND READY FOR USE, AND THEREFORE NOT VALID, UNLESS THEY ARE SEALED, SIGNED AND DATED.

Copyright, Ltd 2023

Consultant

PLEASE RECYCLE

Project
WEST WENDOVER NEW FS #13

N. GENE L. JONES WAY, WEST WENDOVER, NV 89883

Job No: 22-002.00

Owner
CITY OF WEST WENDOVER

PHASE-1B DESIGN DEVELOPMENT

REVISIONS		
REV	DATE	DESCRIPTION

Sheet Title
BUILDING MATERIAL SCHEDULES & ROOM FINISH SCHEDULE

Date: MAY 3, 2023
Sheet No:

A2.01

DOOR SCHEDULE

DR. NO.	RM. NO.	PR	PANEL SIZE W	PANEL SIZE H	PANEL T	PANEL TYPE	PANEL MAT'L	FRAME TYPE	FRAME MAT'L	FRAME HEAD DTL	FRAME SILL DTL	FRAME JAMB DTL LATCH	FRAME JAMB DTL HINGE	HDWR	LABEL	REMARKS
101	101		3' - 0"	7' - 4"	1 3/4"	FG										
103	103		3' - 6"	7' - 0"	1 3/4"	II										
104	105		3' - 6"	7' - 0"	1 3/4"	X										
105	109		3' - 6"	7' - 0"	1 3/4"	II										
106	106		3' - 0"	7' - 0"	1 3/4"	F										
107	105		3' - 0"	7' - 0"	1 3/4"	N										
108	108		3' - 0"	7' - 0"	1 3/4"	N										
110	110		3' - 6"	7' - 0"	1 3/4"	HH										
111	115		4' - 0"	7' - 0"	1 3/4"	O										
112	112		4' - 0"	7' - 0"	1 3/4"	S										
113	113			7' - 0"	1 3/4"	Y										
114	114		4' - 0"	7' - 0"	1 3/4"	O										
114A	115		4' - 0"	7' - 0"	1 3/4"	O										
115	115		4' - 0"	7' - 0"	1 3/4"	S										
115A				14' - 0"	1 5/8"	EE										
115B				14' - 0"	1 5/8"	EE										
115C				14' - 0"	1 5/8"	EE										
115D				14' - 0"	1 5/8"	EE										
115E				14' - 0"	1 5/8"	EE										
115F			4' - 0"	7' - 0"	1 3/4"	S										
115G	115			14' - 0"	1 5/8"	EE										
115H	115			14' - 0"	1 5/8"	EE										
115J	115			14' - 0"	1 5/8"	EE										
115K	115			14' - 0"	1 5/8"	EE										
115L	115		4' - 0"	7' - 0"	1 3/4"	S										
116	116	■	3' - 0"	7' - 0"	1 3/4"	F										
116A				14' - 0"	1 5/8"	EE										
117	118		4' - 0"	7' - 0"	1 3/4"	O										
117A	117		4' - 0"	7' - 0"	1 3/4"	O										
121			4' - 0"	7' - 0"	1 3/4"	S										

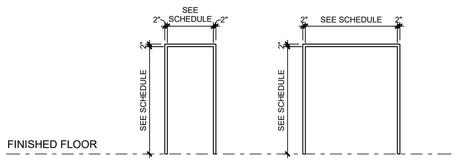

DOOR FRAME TYPES
SCALE: 1/4" = 1'-0"

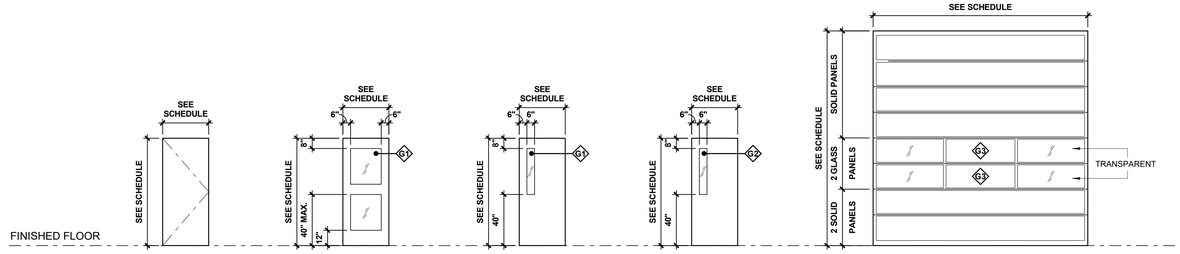

DOOR PANEL TYPES
SCALE: 1/4" = 1'-0"

GENERAL NOTES

1. VERIFY ALL DIMENSIONS IN FIELD PRIOR TO FABRICATION.
2. GRIND ALL WELDS SMOOTH.
3. COORDINATE ALL FRAMES WITH INTRUSION ALARM CONDUIT ROUGH-IN REQUIREMENTS, PER ELECTRICAL DRAWINGS.
4. THE BOTTOM 12" OF DOOR (EXCEPT AUTOMATIC DOORS) SHALL HAVE A SMOOTH UNINTERRUPTED SURFACE.
5. ALL ALUMINUM FRAMES TO BE FACTORY FINISHED.
6. ALL STEEL FRAMES AND DOORS TO BE PAINTED. REFER TO PAINT COLOR SCHEDULE.
7. TEMPERED GLAZING SHALL BE INSTALLED IN ACCORDANCE WITH IBC 2406.4.1.

KEYNOTES

LEGEND

HM	HOLLOW METAL
SC	SOLID-CORE
STL	STEEL
AL	ALUMINUM
PR	PAIR
X	GLASS TYPE, SEE SPECIFICATIONS

GLAZING TYPES:

- G1 EXTERIOR 1" LOW-E INSULATED TEMPERED SAFETY GLAZING
- G2 INTERIOR 1/4" FULLY TEMPERED SAFETY GLAZING
- G3 EXTERIOR OVERHEAD DOOR 1/2" LOW-E INSULATED TEMPERED GLAZING

NOTE: REFER TO SPECIFICATION FOR FULL DESCRIPTION OF GLAZING TYPES

tsk
314 South Water Street,
Suite 100
Henderson, NV 89015
phone: 702.456.3000
fax: 702.898.6209
www.tska.com

THESE DRAWINGS AND SPECIFICATIONS ARE THE PROPERTY OF TATE SNYDER KIMSEY ARCHITECTS AND MAY NOT BE REPRODUCED OR USED FOR ANY PURPOSE WITHOUT THE ARCHITECTS WRITTEN CONSENT. AS INSTRUMENTS OF SERVICE, THESE DOCUMENTS ARE NOT FINAL AND READY FOR USE, AND THEREFORE NOT VALID, UNLESS THEY ARE SEALED, SIGNED AND DATED.

Copyright, Ltd 2023

Consultant

PLEASE RECYCLE

Project
WEST WENDOVER NEW FS #13

N. GENE L. JONES WAY, WEST WENDOVER, NV 89883

Job No: 22-002.00

Owner
CITY OF WEST WENDOVER

PHASE-1B DESIGN DEVELOPMENT

REVISIONS		
REV	DATE	DESCRIPTION

Sheet Title
DOOR SCHEDULE, PANEL AND FRAME TYPES

Date: MAY 3, 2023
Sheet No:
A2.11

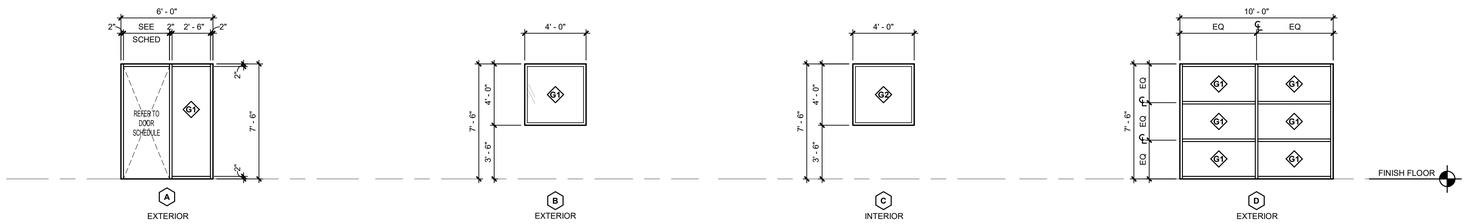

A WINDOW TYPES

SCALE: 1/4" = 1'-0"

GENERAL NOTES

1. VERIFY ALL DIMENSIONS IN FIELD PRIOR TO FABRICATION.
2. ALL SILL DIMENSIONS ARE TAKEN FROM FINISH FLOOR UNLESS NOTED OTHERWISE.
3. ALL ALUMINUM FRAMES TO BE FACTORY FINISHED.
4. ALL STEEL FRAMES TO BE PAINTED. REFER TO PAINT COLOR SCHEDULE.
5. COORDINATE ALL FRAMES WITH INTRUSION ALARM CONDUIT ROUGH-IN REQUIREMENTS, PER ELECTRICAL DRAWINGS.
6. TEMPERED GLAZING SHALL BE INSTALLED IN ACCORDANCE WITH IBC 2406.4.1.

KEYNOTES

LEGEND

- CLEAR GLAZING
- G1 — EXTERIOR 1" LOW-E INSULATED TEMPERED SAFETY GLAZING
- G2 — INTERIOR 1/4" FULLY TEMPERED SAFETY GLAZING

tsk
314 South Water Street,
Suite 100
Henderson, NV 89015
phone: 702.456.3000
fax: 702.898.6209
www.tska.com

THESE DRAWINGS AND SPECIFICATIONS ARE THE PROPERTY OF TATE SNYDER KIMSEY ARCHITECTS AND MAY NOT BE REPRODUCED OR USED FOR ANY PURPOSE WITHOUT THE ARCHITECTS WRITTEN CONSENT. AS INSTRUMENTS OF SERVICE, THESE DOCUMENTS ARE NOT FINAL AND READY FOR USE, AND THEREFORE NOT VALID, UNLESS THEY ARE SEALED, SIGNED AND DATED.

Copyright, Ltd 2023

Consultant

PLEASE RECYCLE

Project

WEST WENDOVER NEW FS #13

N. GENE L. JONES WAY, WEST WENDOVER, NV 89883

Job No: 22-002.00

Owner

CITY OF WEST WENDOVER

PHASE-1B DESIGN DEVELOPMENT

REVISIONS		
REV	DATE	DESCRIPTION

Sheet Title

WINDOW TYPES

Date: MAY 3, 2023

Sheet No:

A2.21

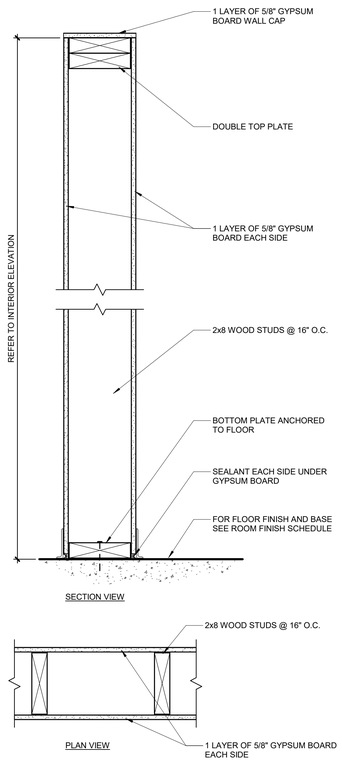

PARTITION TYPE — H3

SCALE : 1 1/2" = 1'-0"

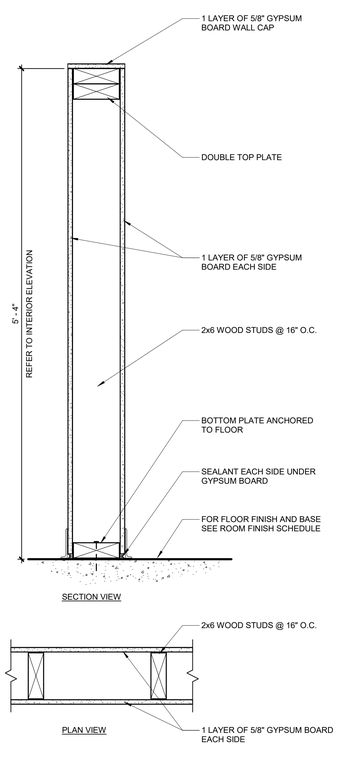

PARTITION TYPE — H2

SCALE : 1 1/2" = 1'-0"

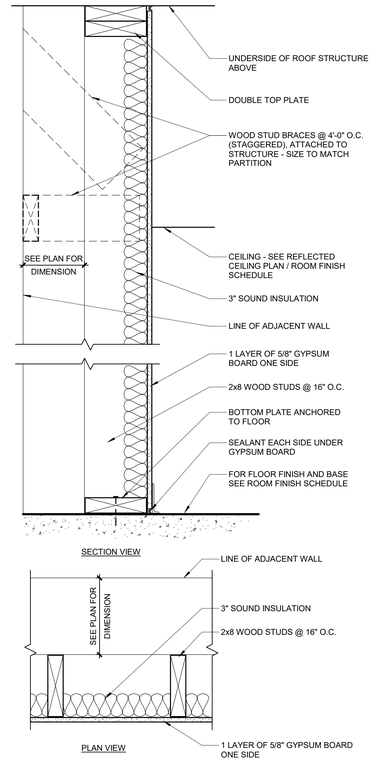

PARTITION TYPE — FULL HEIGHT — E5

SCALE : 1 1/2" = 1'-0"

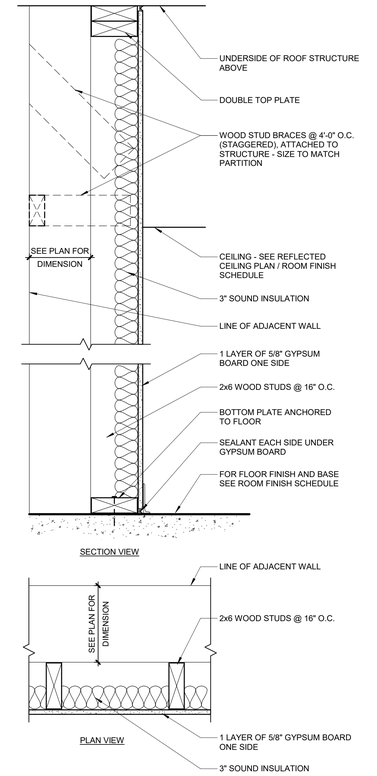

PARTITION TYPE — FULL HEIGHT — E4

SCALE : 1 1/2" = 1'-0"

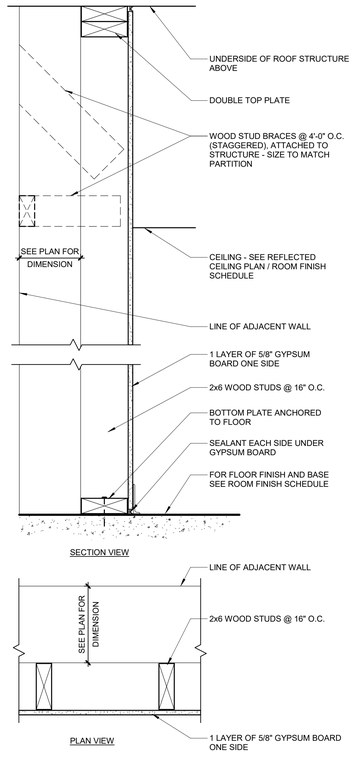

PARTITION TYPE — FULL HEIGHT — E2

SCALE : 1 1/2" = 1'-0"

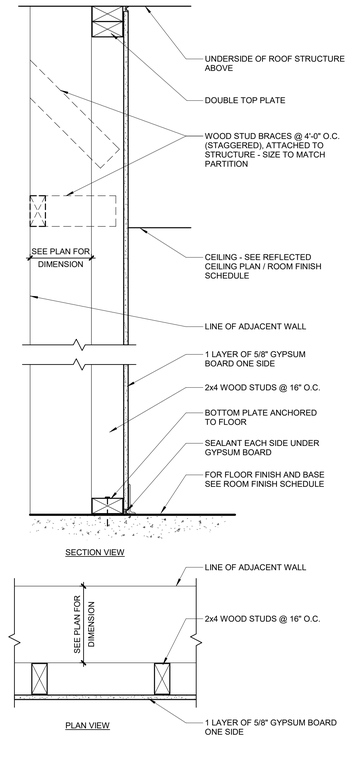

PARTITION TYPE — FULL HEIGHT — E1

SCALE : 1 1/2" = 1'-0"

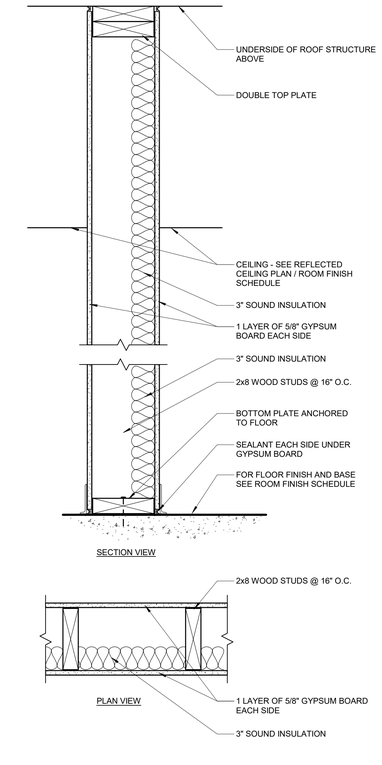

PARTITION TYPE — STC-45 ACOUSTICAL PARTITION — C4

SCALE : 1 1/2" = 1'-0"

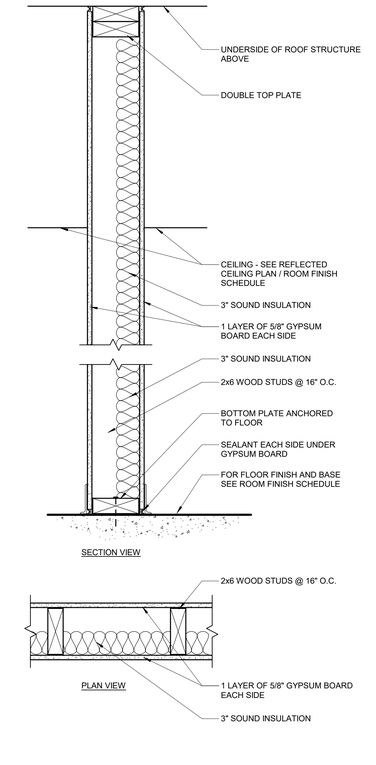

PARTITION TYPE — STC-45 ACOUSTICAL PARTITION — C3

SCALE : 1 1/2" = 1'-0"

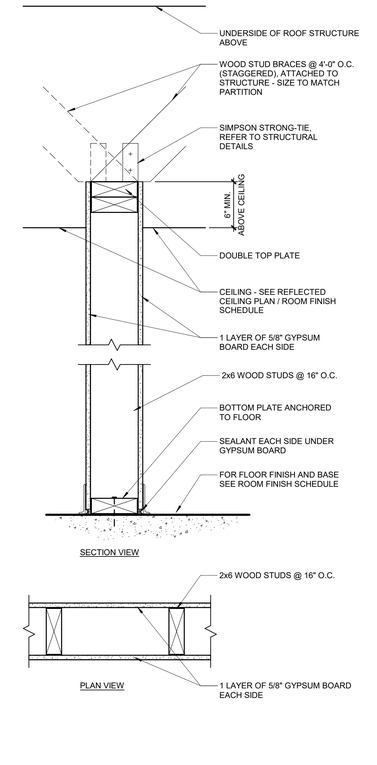

PARTITION TYPE — A2

SCALE : 1 1/2" = 1'-0"

tsk
314 South Water Street,
Suite 100
Henderson, NV 89015
phone: 702.456.3000
fax: 702.898.6209
www.tska.com

THESE DRAWINGS AND SPECIFICATIONS ARE THE PROPERTY OF TATE SNYDER KIMSEY ARCHITECTS AND MAY NOT BE REPRODUCED OR USED FOR ANY PURPOSE WITHOUT THE ARCHITECTS WRITTEN CONSENT. AS INSTRUMENTS OF SERVICE, THESE DOCUMENTS ARE NOT FINAL AND READY FOR USE, AND THEREFORE NOT VALID, UNLESS THEY ARE SEALED, SIGNED AND DATED.

Copyright, Ltd 2023

Consultant

PLEASE RECYCLE

Project

WEST WENDOVER NEW FS #13

N. GENE L. JONES WAY, WEST WENDOVER, NV 89883

Job No: 22-002.00

Owner

CITY OF WEST WENDOVER

PHASE-1B DESIGN DEVELOPMENT

REVISIONS		
REV	DATE	DESCRIPTION

Sheet Title

PARTITION TYPES

Date: MAY 3, 2023

Sheet No:

A2.31

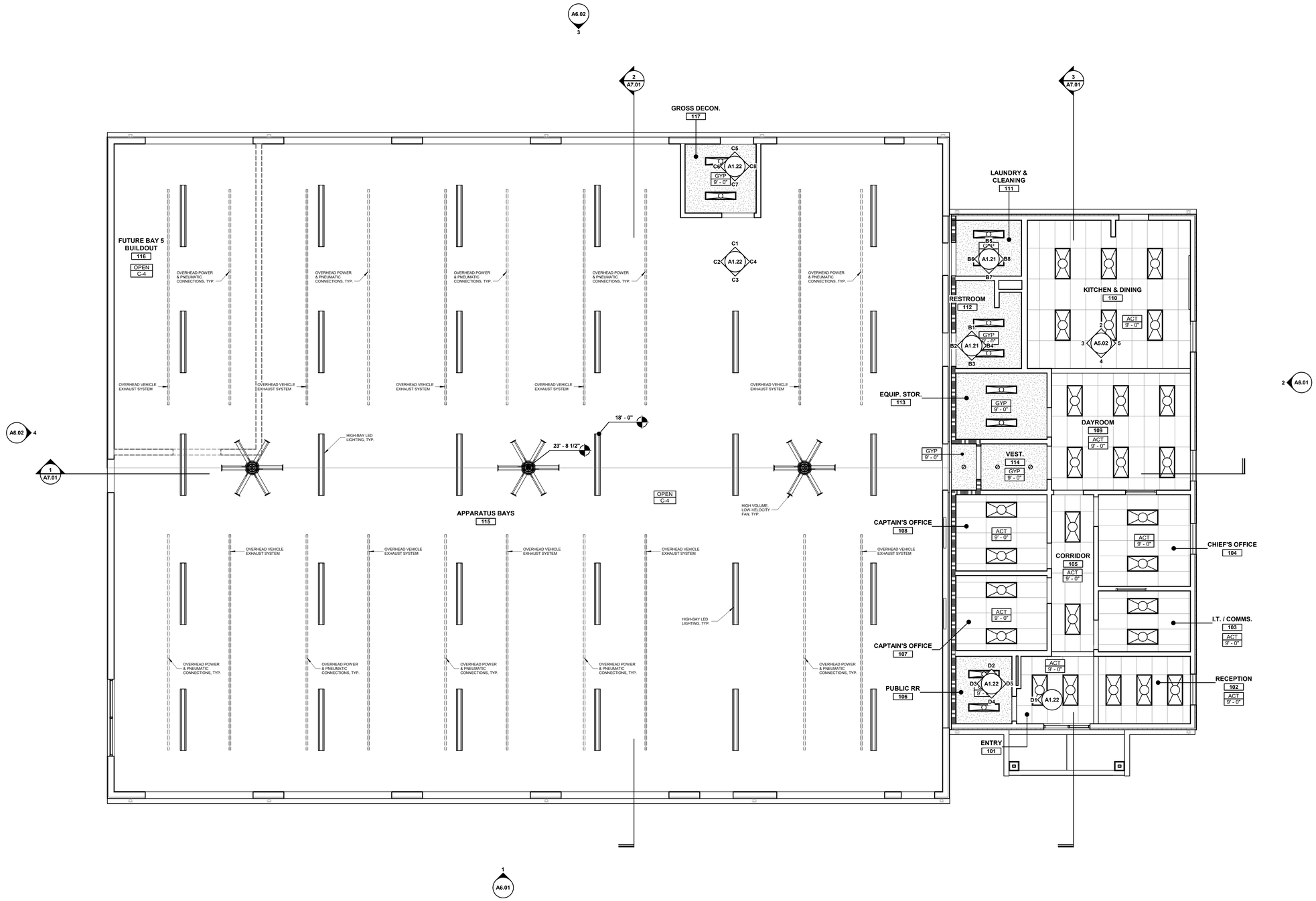

1 REFLECTED CEILING PLAN
SCALE: 3/16" = 1'-0"

NORTH

0' 3' 5' 11'

GENERAL NOTES

1. REFER TO ENLARGED PLANS AND FINISH SCHEDULE FOR CEILING TYPE AND FINISH.
2. REFER TO SHEET A3.11 FOR ALL CEILING DETAILS AND MATERIAL SCHEDULE.
3. SPRINKLER HEADS TO BE CENTERED IN ALL CORRIDORS AND IN CEILING TILES WHERE TILES OCCUR.
4. REFER TO ROOM FINISH SCHEDULE FOR CEILING HEIGHTS AND FINISHES NOT SHOWN ON PLAN.
5. MAINTAIN MINIMUM 3" CLEAR BETWEEN LIGHTS, DIFFUSERS, SPEAKERS, ETC.
6. REFER TO ROOM FINISH SCHEDULE FOR COLOR OF EXPOSED STRUCTURE TO BE PAINTED.
7. COORDINATE LOCATIONS OF CAMERAS TO ENSURE THAT CAMERA VIEWS ARE NOT OBSTRUCTED.
8. CEILING / SOFFIT ELEVATIONS ARE BASED FROM FINISH FLOOR ELEVATIONS. (NOTE: FINISH FLOOR MAY VARY THROUGHOUT THE BUILDING)
9. REFER TO SHEET A1.41FOR EQUIPMENT SCHEDULE.
10. PROVIDE SHADOW MOLD TRIM AS SHOWN ON DETAIL SHEET WHERE ADJACENT CEILING ALIGNS WITH SOFFIT.
11. CASTLE-CUT GYPSUM BOARD TO DECK AND SEAL AT AREAS WITHOUT CEILINGS, UNLESS NOTED OTHERWISE.
12. ALL EXPOSED FASTENERS ON THE UNDERSIDE OF DECK TO BE CUT TO THE SAME LENGTH AND PAINTED TO MATCH THE STRUCTURE.

KEYNOTES

LEGEND

- 24" x 48" ACOUSTIC CEILING TILE **C-1**
- 24" x 24" ACOUSTIC CEILING TILE, NON-PERFORATED **C-2**
- PAINTED GYPSUM BOARD **C-3**
- EXPOSED TO STRUCTURE **C-4**

tsk
314 South Water Street,
Suite 100
Henderson, NV 89015
phone: 702.456.3000
fax: 702.898.6209
www.tska.com

THESE DRAWINGS AND SPECIFICATIONS ARE THE PROPERTY OF TATE SNYDER KIMSEY ARCHITECTS AND MAY NOT BE REPRODUCED OR USED FOR ANY PURPOSE WITHOUT THE ARCHITECTS WRITTEN CONSENT. AS INSTRUMENTS OF SERVICE, THESE DOCUMENTS ARE NOT FINAL AND READY FOR USE, AND THEREFORE NOT VALID, UNLESS THEY ARE SEALED, SIGNED AND DATED.

Copyright, Ltd 2023

Consultant

PLEASE RECYCLE

Project
WEST WENDOVER NEW FS #13

N. GENE L. JONES WAY, WEST WENDOVER, NV 89883

Job No: 22-002.00

Owner
CITY OF WEST WENDOVER

PHASE-1B DESIGN DEVELOPMENT

REVISIONS		
REV	DATE	DESCRIPTION

Sheet Title
REFLECTED CEILING PLAN

Date: MAY 3, 2023
Sheet No:
A3.01

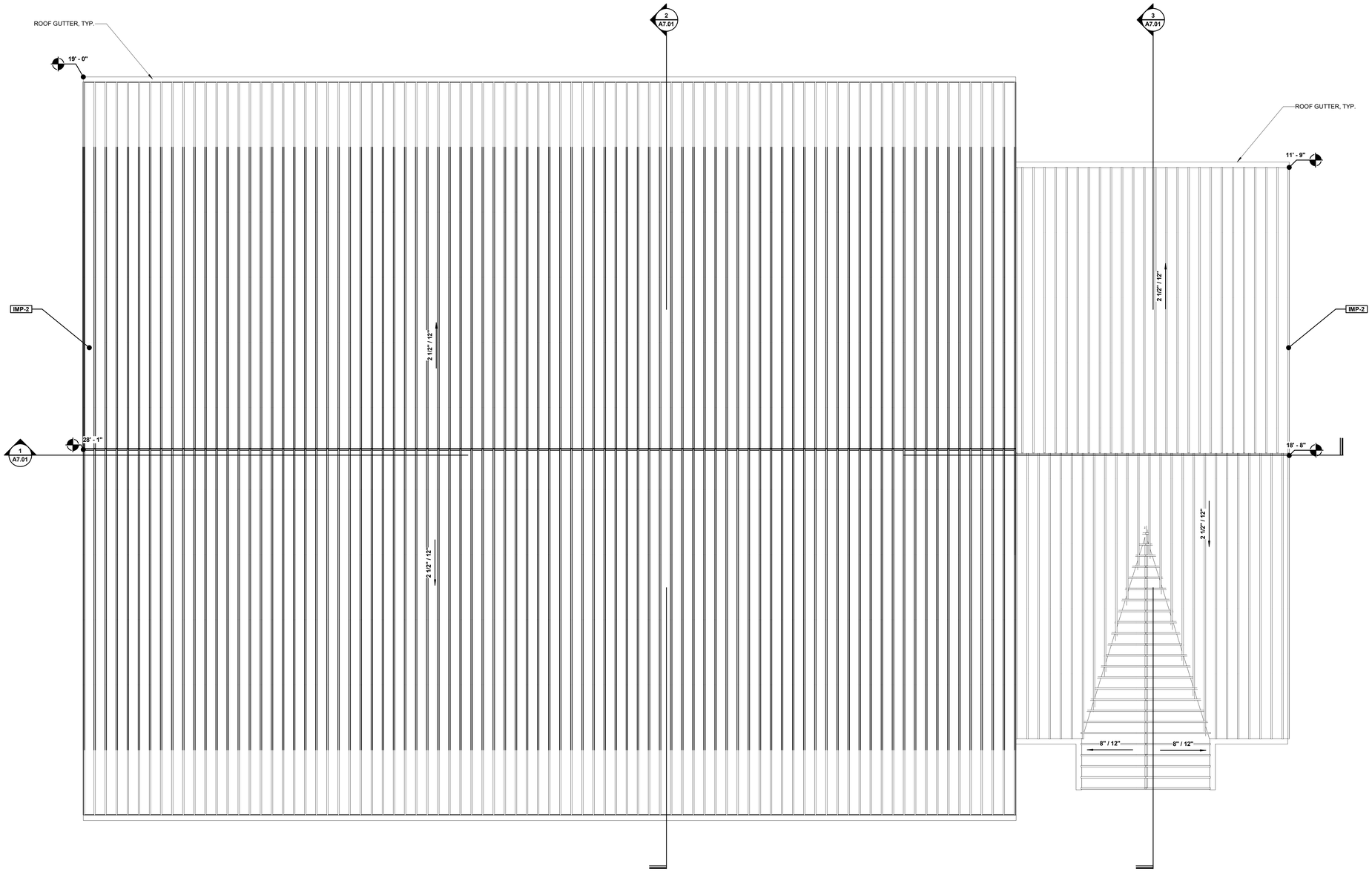

1 ROOF PLAN
SCALE: 3/16" = 1'-0"

NORTH 0' 3' 5' 11'

GENERAL NOTES

1. ALL TOP OF PARAPET (T.O.P.) AND BOTTOM OF DECK (B.O.D.) ELEVATIONS ARE FROM FINISH FLOOR ELEVATION. SEE EXTERIOR ELEVATIONS FOR TOP OF WALL HEIGHTS.
2. REFER TO MECHANICAL PLANS FOR ROOF TOP MECHANICAL EQUIPMENT.
3. ALL ROOF DRAINS SHALL BE A MINIMUM OF 2'-0" CLEAR FROM ALL PARAPETS OR WALL.
4. SLOPE ROOF AS SHOWN. DIRECTIONAL ARROWS ON ROOF PLAN INDICATES DIRECTION OF ROOF SLOPE TO ROOF DRAIN.
5. ALL MAIN ROOF DRAINS SHALL BE LOCATED AT THE LOWEST POSSIBLE ROOF ELEVATION. NOTIFY THE ARCHITECT OF ANY CONFLICTS PRIOR TO ROOF DRAIN AND PIPING INSTALLATION.
6. CRICKET ALL ROOF TOP MECHANICAL UNITS, SKYLIGHTS, HATCHES, ETC., SLOPE TO BE A MINIMUM OF 1/2" PER FOOT.
7. THERE ARE NO FLAT SPOTS ON THE ROOF, ALL AREAS SHALL BE SLOPED, TYPICAL.
8. PROVIDE 3'-0" X 3'-0" TRAFFIC PAD AT TOP AND BOTTOM OF ROOF LADDER.
9. ALL VALLEYS TO SLOPE A MINIMUM OF 1/2" PER FOOT TOWARDS DRAIN.
10. ALL EXPOSED FASTENERS TO BE CUT TO THE SAME LENGTH AND PAINTED TO MATCH THE STRUCTURE.
11. NO WORK, INCLUDING STAGING OR ACCESS TO OTHER PORTIONS OF THE FINISHED ROOF MEMBRANE, SHALL BE PERMITTED. IF STAGING, ACCESS, OR WORK IS REQUIRED ON THE FINISHED MEMBRANE, THE CONTRACTOR SHALL PROVIDE SURFACE PROTECTION. SEE SPECIFICATIONS.

KEYNOTES

tsk
314 South Water Street,
Suite 100
Henderson, NV 89015
phone: 702.456.3000
fax: 702.898.6209
www.tska.com

THESE DRAWINGS AND SPECIFICATIONS ARE THE PROPERTY OF TATE SNYDER KIMSEY ARCHITECTS AND MAY NOT BE REPRODUCED OR USED FOR ANY PURPOSE WITHOUT THE ARCHITECTS WRITTEN CONSENT. AS INSTRUMENTS OF SERVICE, THESE DOCUMENTS ARE NOT FINAL AND READY FOR USE, AND THEREFORE NOT VALID, UNLESS THEY ARE SEALED, SIGNED AND DATED.

Copyright, Ltd 2023

Consultant

PLEASE RECYCLE

Project
WEST WENDOVER NEW FS #13

N. GENE L. JONES WAY, WEST WENDOVER, NV 89883

Job No: 22-002.00

Owner
CITY OF WEST WENDOVER

PHASE-1B DESIGN DEVELOPMENT

REVISIONS		
REV	DATE	DESCRIPTION

Sheet Title
OVERALL ROOF PLAN

Date: MAY 3, 2023
Sheet No:
A4.01

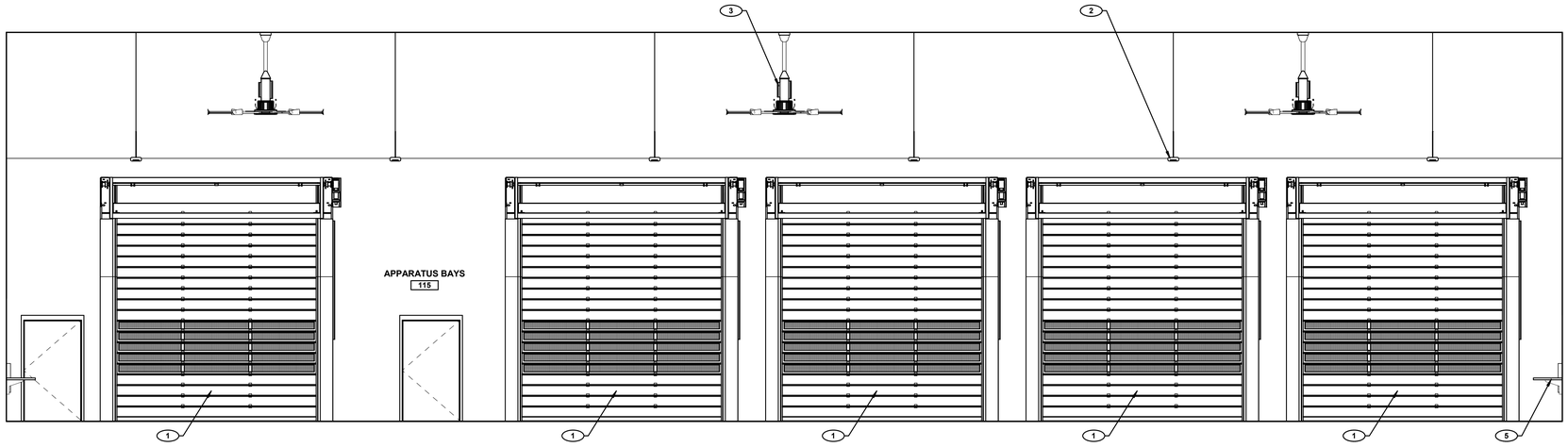

3 APPARATUS BAYS 115 - SOUTH
SCALE: 1/4" = 1'-0"

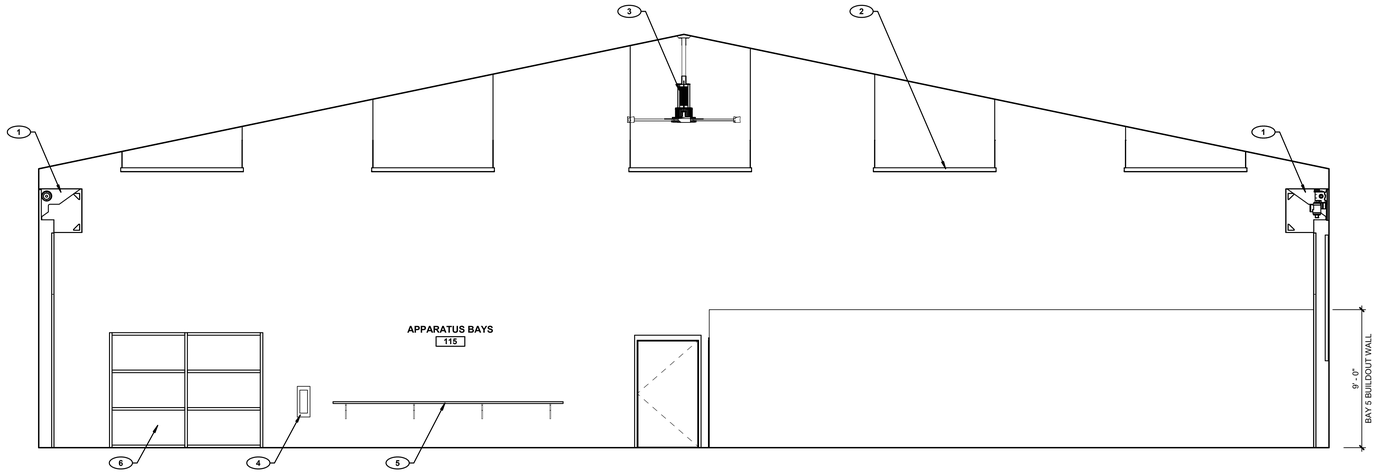

2 APPARATUS BAYS 115 - WEST
SCALE: 1/4" = 1'-0"

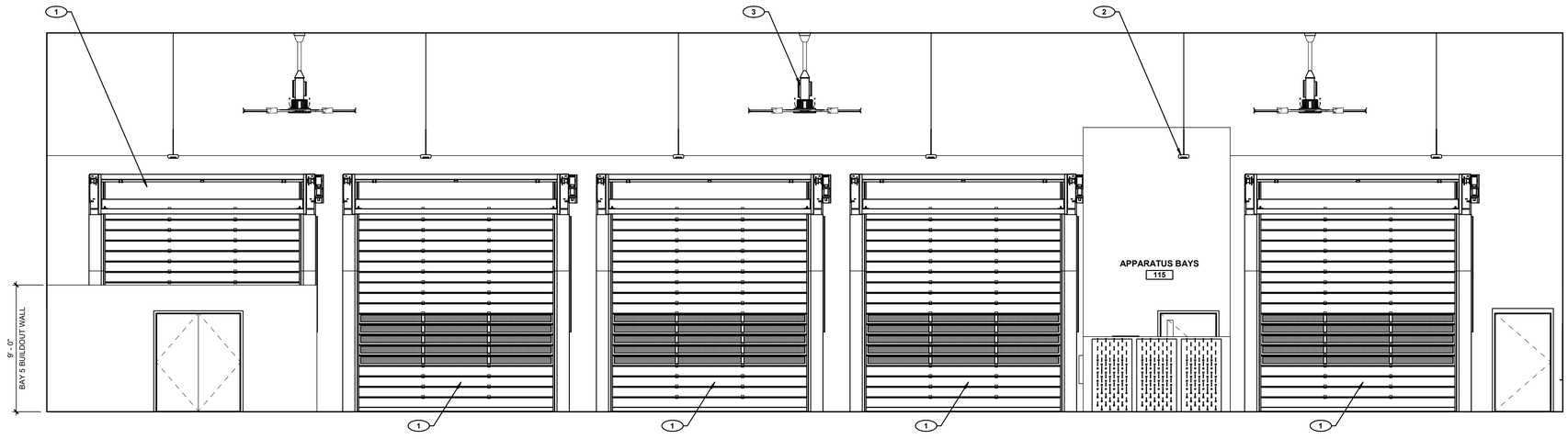

1 APPARATUS BAYS 115 - NORTH
SCALE: 1/4" = 1'-0"

GENERAL NOTES

1. REFER TO SHEET A2.01 FOR ROOM FINISH SCHEDULE AND MATERIAL SCHEDULE.
2. REFER TO CASEWORK PLANS & ELEVATIONS FOR INTERIOR ELEVATIONS OF WALLS BEHIND CASEWORK.
3. PROVIDE SUFFICIENT BLOCKING ON WALLS FOR ALL INTERIOR WALL MOUNTED EQUIPMENT.
4. CONTRACTOR TO REPORT ANY DISCREPANCIES WITH WALL MOUNTED EQUIPMENT AND ACCESSORIES WITH THE ARCHITECT.
5. REFER TO ELECTRICAL DRAWINGS FOR FIXTURE MOUNTING HEIGHTS AND LOCATIONS, UNLESS NOTED OTHERWISE.

KEYNOTES

1. OVERHEAD ROLL-UP DOOR WITH MID-GRAZING, REFER TO DOOR TYPES AND DOOR SCHEDULE
2. HIGH-BAY LED LIGHT FIXTURE, REFER TO ELECTRICAL DRAWINGS
3. HIGH VOLUME, LOW VELOCITY FAN, REFER TO ELECTRICAL DRAWINGS
4. FIRE EXTINGUISHER CABINET, REFER TO LIFE SAFETY PLAN
5. STAINLESS STEEL WITH MARINE EDGE WORK BENCH / CHARGING STATION WITH MULTIPLE OUTLET
6. SCHEDULED WINDOW, REFER TO WINDOW TYPES AND DETAILS
7. 4' x 7' MARKER BOARD
8. ICE MAKER
9. 75" SMART TV MONITOR
10. 4" WALL BASE, REFER TO MATERIAL SCHEDULE

tsk
314 South Water Street,
Suite 100
Henderson, NV 89015
phone: 702.456.3000
fax: 702.898.6209
www.tska.com

THESE DRAWINGS AND SPECIFICATIONS ARE THE PROPERTY OF TATE SNYDER KIMSEY ARCHITECTS AND MAY NOT BE REPRODUCED OR USED FOR ANY PURPOSE WITHOUT THE ARCHITECTS WRITTEN CONSENT. AS INSTRUMENTS OF SERVICE, THESE DOCUMENTS ARE NOT FINAL AND READY FOR USE, AND THEREFORE NOT VALID, UNLESS THEY ARE SEALED, SIGNED AND DATED.

Copyright, Ltd 2023

Consultant

PLEASE RECYCLE

Project
WEST WENDOVER NEW FS #13

N. GENE L. JONES WAY, WEST WENDOVER, NV 89883

Job No: 22-002.00

Owner
CITY OF WEST WENDOVER

PHASE-1B DESIGN DEVELOPMENT

REVISIONS		
REV	DATE	DESCRIPTION

Sheet Title
INTERIOR ELEVATIONS

Date: MAY 3, 2023
Sheet No:
A5.01

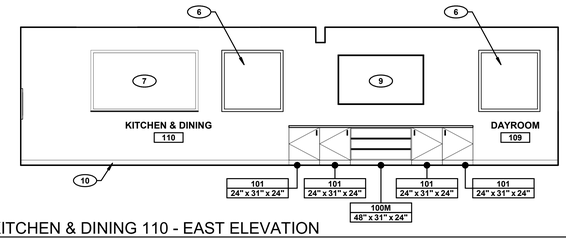

5 KITCHEN & DINING 110 - EAST ELEVATION
SCALE: 1/4" = 1'-0"

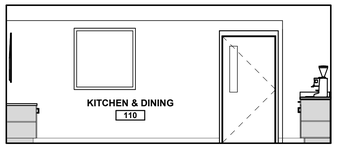

4 KITCHEN & DINING 110 - SOUTH ELEVATION
SCALE: 1/4" = 1'-0"

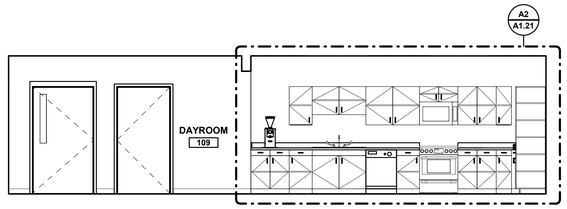

3 KITCHEN & DINING 110 - WEST ELEVATION
SCALE: 1/4" = 1'-0"

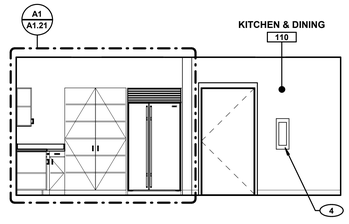

2 KITCHEN & DINING 110 - NORTH ELEVATION
SCALE: 1/4" = 1'-0"

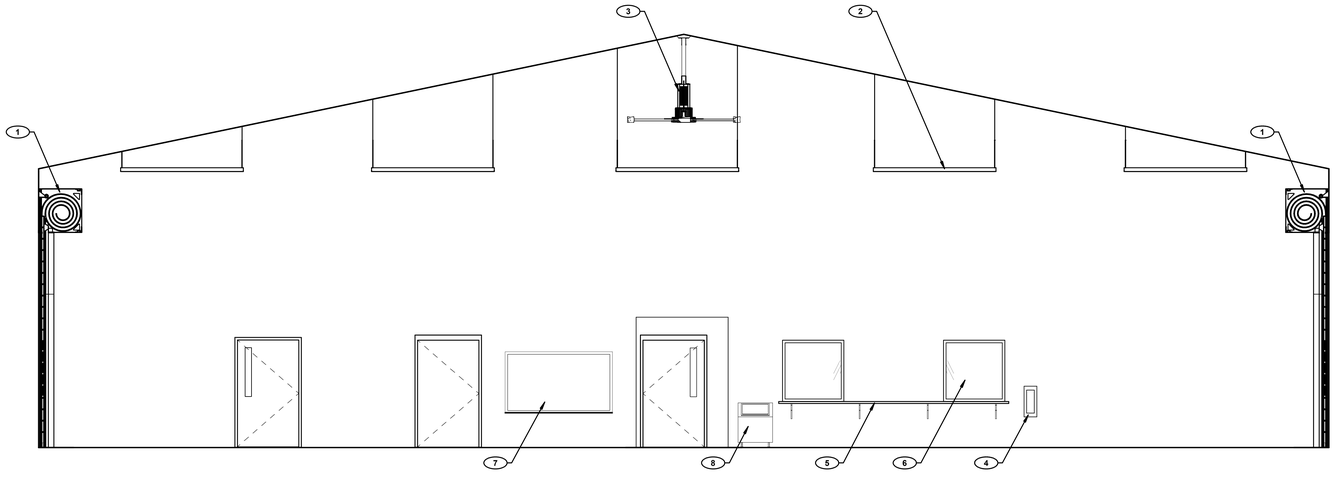

1 APPARATUS BAYS 115 - EAST
SCALE: 1/4" = 1'-0"

GENERAL NOTES

1. REFER TO SHEET A2.01 FOR ROOM FINISH SCHEDULE AND MATERIAL SCHEDULE.
2. REFER TO CASEWORK PLANS & ELEVATIONS FOR INTERIOR ELEVATIONS OF WALLS BEHIND CASEWORK.
3. PROVIDE SUFFICIENT BLOCKING ON WALLS FOR ALL INTERIOR WALL MOUNTED EQUIPMENT.
4. CONTRACTOR TO REPORT ANY DISCREPANCIES WITH WALL MOUNTED EQUIPMENT AND ACCESSORIES WITH THE ARCHITECT.
5. REFER TO ELECTRICAL DRAWINGS FOR FIXTURE MOUNTING HEIGHTS AND LOCATIONS, UNLESS NOTED OTHERWISE.

KEYNOTES

1. OVERHEAD ROLL-UP DOOR WITH MID-GRAZING, REFER TO DOOR TYPES AND DOOR SCHEDULE
2. HIGH-BAY LED LIGHT FIXTURE, REFER TO ELECTRICAL DRAWINGS
3. HIGH VOLUME, LOW VELOCITY FAN, REFER TO ELECTRICAL DRAWINGS
4. FIRE EXTINGUISHER CABINET, REFER TO LIFE SAFETY PLAN
5. STAINLESS STEEL WITH MARINE EDGE WORK BENCH / CHARGING STATION WITH MULTIPLE OUTLET
6. SCHEDULED WINDOW, REFER TO WINDOW TYPES AND DETAILS
7. 4' x 7' MARKER BOARD
8. ICE MAKER
9. 75" SMART TV MONITOR
10. 4" WALL BASE, REFER TO MATERIAL SCHEDULE

tsk
314 South Water Street,
Suite 100
Henderson, NV 89015
phone: 702.456.3000
fax: 702.898.6209
www.tska.com

THESE DRAWINGS AND SPECIFICATIONS ARE THE PROPERTY OF TATE SNYDER KIMSEY ARCHITECTS AND MAY NOT BE REPRODUCED OR USED FOR ANY PURPOSE WITHOUT THE ARCHITECTS WRITTEN CONSENT.
AS INSTRUMENTS OF SERVICE, THESE DOCUMENTS ARE NOT FINAL AND READY FOR USE, AND THEREFORE NOT VALID, UNLESS THEY ARE SEALED, SIGNED AND DATED.
Copyright, Ltd 2023

Consultant

PLEASE RECYCLE

Project
WEST WENDOVER NEW FS #13

N. GENE L. JONES WAY, WEST WENDOVER, NV 89883

Job No: 22-002.00

Owner
CITY OF WEST WENDOVER

PHASE-1B DESIGN DEVELOPMENT

REVISIONS		
REV	DATE	DESCRIPTION

Sheet Title
INTERIOR ELEVATIONS

Date: MAY 3, 2023
Sheet No:
A5.02

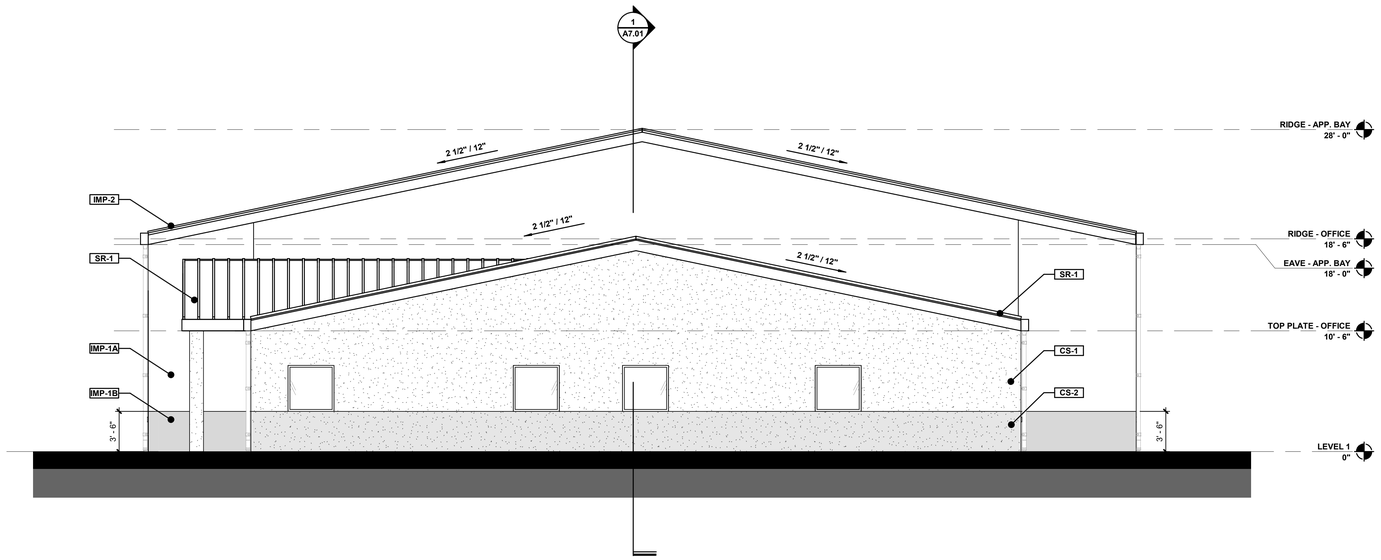

2 EXTERIOR ELEVATION - NORTH
SCALE: 3/16" = 1'-0"

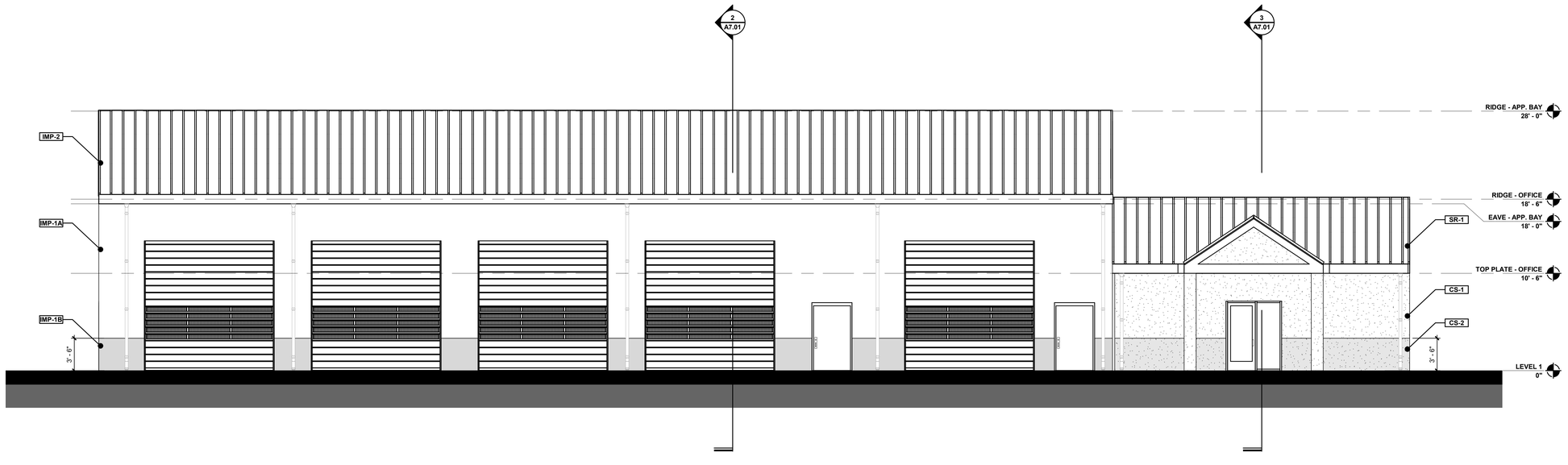

1 EXTERIOR ELEVATION - EAST
SCALE: 3/16" = 1'-0"

GENERAL NOTES

1. REFER TO CIVIL DRAWINGS FOR VARIOUS GRADE LEVELS.
2. ALL RIDGE, TOP PLATE AND EAVE ELEVATION INDICATED ARE MEASURED FROM FINISH FLOOR ELEVATION.
3. ALL EXPOSED EXTERIOR MASONRY TO RECEIVE ANTI-GRAFFITI COATING, INCLUDING ALL SITE WALLS.
4. REFER TO SHEET A2.01 FOR ROOM FINISH SCHEDULE AND MATERIAL SCHEDULE.
5. PROVIDE SUFFICIENT BLOCKING ON WALLS FOR ALL EXTERIOR WALL MOUNTED EQUIPMENT.
6. REFER TO ELECTRICAL DRAWINGS FOR FIXTURE MOUNTING HEIGHTS AND LOCATIONS UNLESS NOTED OTHERWISE.
7. COORDINATE ALL CONDUIT AND J-BOXES TO BE INSTALLED IN CMU WALLS PRIOR TO CMU WALL INSTALLATION.
8. PROVIDE EXPANSION JOINT / CONTROL JOINT ON CMU WALLS AS REQUIRED.
9. PAINT ALL EXPOSED MECHANICAL EQUIPMENT THAT ARE VISIBLE FROM THE ROOF PARAPET

KEYNOTES

LEGEND

- EIFS **(CS-1)**
- EIFS **(CS-2)**
- INSULATED METAL PANEL **(IMP-1A)**
- INSULATED METAL PANEL **(IMP-1B)**
- INSULATED METAL ROOF PANEL **(IMP-2)**
- STANDING SEAM ROOF **(SR-1)**

tsk
314 South Water Street,
Suite 100
Henderson, NV 89015
phone: 702.456.3000
fax: 702.898.6209
www.tska.com

THESE DRAWINGS AND SPECIFICATIONS ARE THE PROPERTY OF TATE SNYDER KIMSEY ARCHITECTS AND MAY NOT BE REPRODUCED OR USED FOR ANY PURPOSE WITHOUT THE ARCHITECTS WRITTEN CONSENT.
AS INSTRUMENTS OF SERVICE, THESE DOCUMENTS ARE NOT FINAL AND READY FOR USE, AND THEREFORE NOT VALID, UNLESS THEY ARE SEALED, SIGNED AND DATED.
Copyright, Ltd 2023

Consultant

PLEASE RECYCLE

Project
WEST WENDOVER NEW FS #13

N. GENE L. JONES WAY, WEST WENDOVER, NV 89883

Job No: 22-002.00

Owner
CITY OF WEST WENDOVER

PHASE-1B DESIGN DEVELOPMENT

REVISIONS

REV	DATE	DESCRIPTION

Sheet Title
EXTERIOR ELEVATIONS

Date: MAY 3, 2023
Sheet No:
A6.01

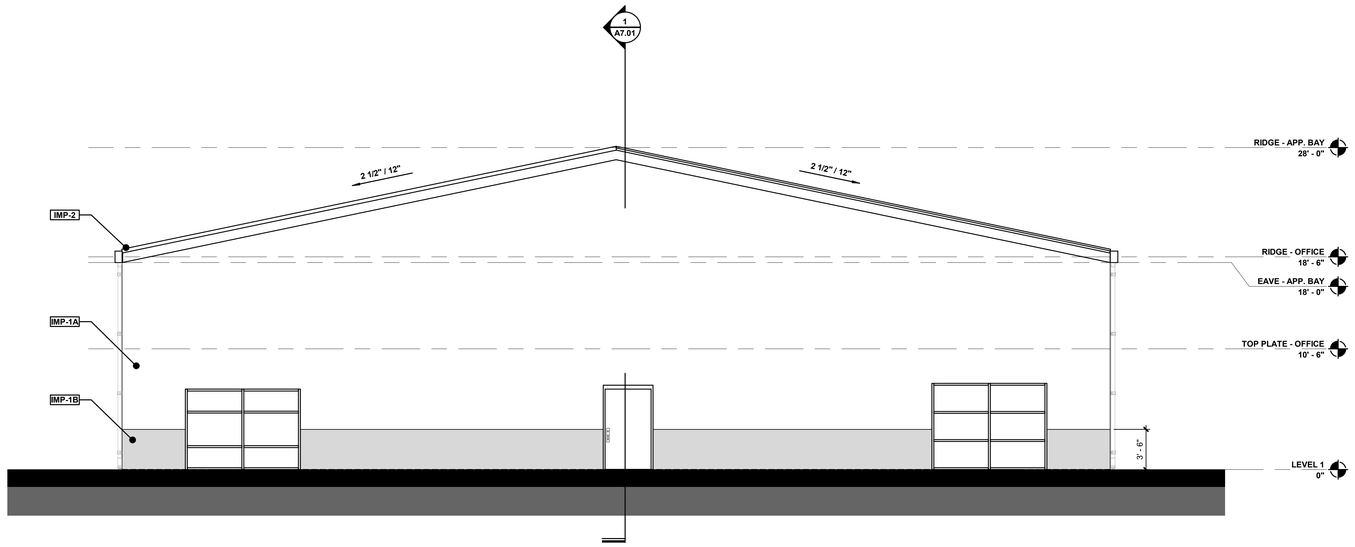

4 EXTERIOR ELEVATION - SOUTH
SCALE: 3/16" = 1'-0"

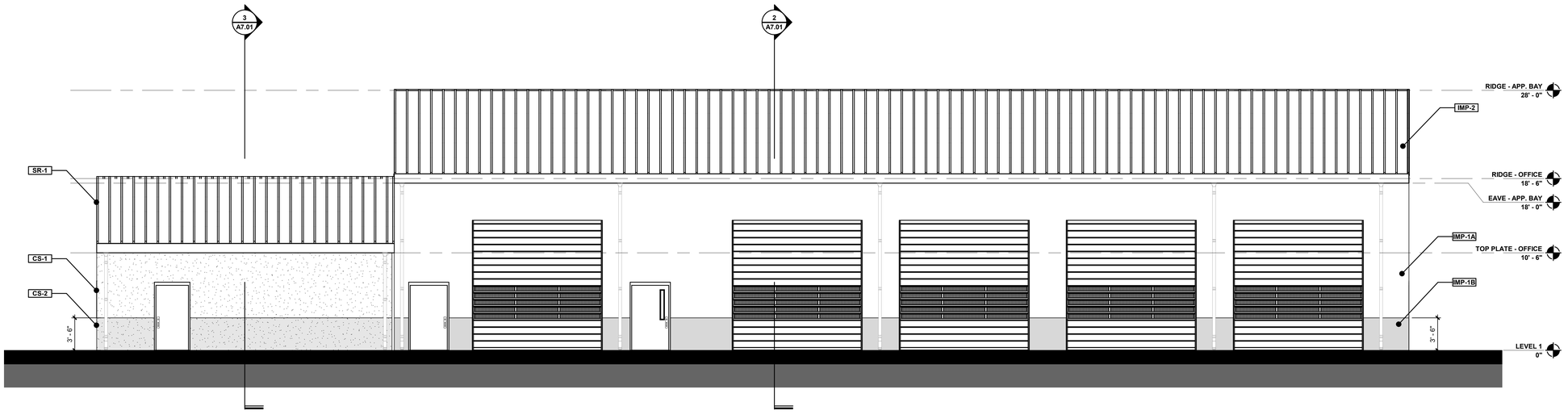

3 EXTERIOR ELEVATION - WEST
SCALE: 3/16" = 1'-0"

GENERAL NOTES

1. REFER TO CIVIL DRAWINGS FOR VARIOUS GRADE LEVELS.
2. ALL RIDGE, TOP PLATE AND EAVE ELEVATION INDICATED ARE MEASURED FROM FINISH FLOOR ELEVATION.
3. ALL EXPOSED EXTERIOR MASONRY TO RECEIVE ANTI-GRAFFITI COATING, INCLUDING ALL SITE WALLS.
4. REFER TO SHEET A2.01 FOR ROOM FINISH SCHEDULE AND MATERIAL SCHEDULE.
5. PROVIDE SUFFICIENT BLOCKING ON WALLS FOR ALL EXTERIOR WALL MOUNTED EQUIPMENT.
6. REFER TO ELECTRICAL DRAWINGS FOR FIXTURE MOUNTING HEIGHTS AND LOCATIONS UNLESS NOTED OTHERWISE.
7. COORDINATE ALL CONDUIT AND J-BOXES TO BE INSTALLED IN CMU WALLS PRIOR TO CMU WALL INSTALLATION.
8. PROVIDE EXPANSION JOINT / CONTROL JOINT ON CMU WALLS AS REQUIRED.
9. PAINT ALL EXPOSED MECHANICAL EQUIPMENT THAT ARE VISIBLE FROM THE ROOF PARAPET

KEYNOTES

LEGEND

- EIFS (CS-1)
- EIFS (CS-2)
- INSULATED METAL PANEL (IMP-1A)
- INSULATED METAL PANEL (IMP-1B)
- INSULATED METAL ROOF PANEL (IMP-2)
- STANDING SEAM ROOF (SR-1)

tsk
314 South Water Street,
Suite 100
Henderson, NV 89015
phone: 702.456.3000
fax: 702.898.6209
www.tska.com

THESE DRAWINGS AND SPECIFICATIONS ARE THE PROPERTY OF TATE SNYDER KIMSEY ARCHITECTS AND MAY NOT BE REPRODUCED OR USED FOR ANY PURPOSE WITHOUT THE ARCHITECTS WRITTEN CONSENT.
AS INSTRUMENTS OF SERVICE, THESE DOCUMENTS ARE NOT FINAL AND READY FOR USE, AND THEREFORE NOT VALID, UNLESS THEY ARE SEALED, SIGNED AND DATED.
Copyright, Ltd 2023

Consultant

PLEASE RECYCLE

Project
WEST WENDOVER NEW FS #13

N. GENE L. JONES WAY, WEST WENDOVER, NV 89883

Job No: 22-002.00

Owner
CITY OF WEST WENDOVER

PHASE-1B DESIGN DEVELOPMENT

REVISIONS		
REV	DATE	DESCRIPTION

Sheet Title
EXTERIOR ELEVATIONS

Date: MAY 3, 2023
Sheet No:
A6.02

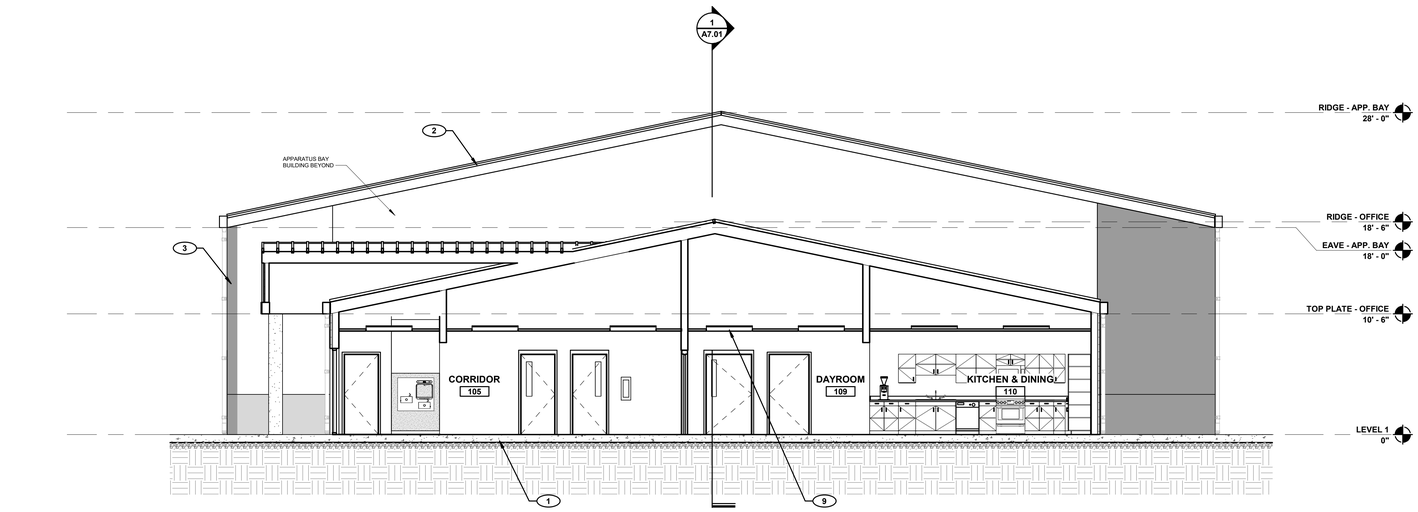

3 BUILDING SECTION - MAIN BUILDING
SCALE: 3/16" = 1'-0"

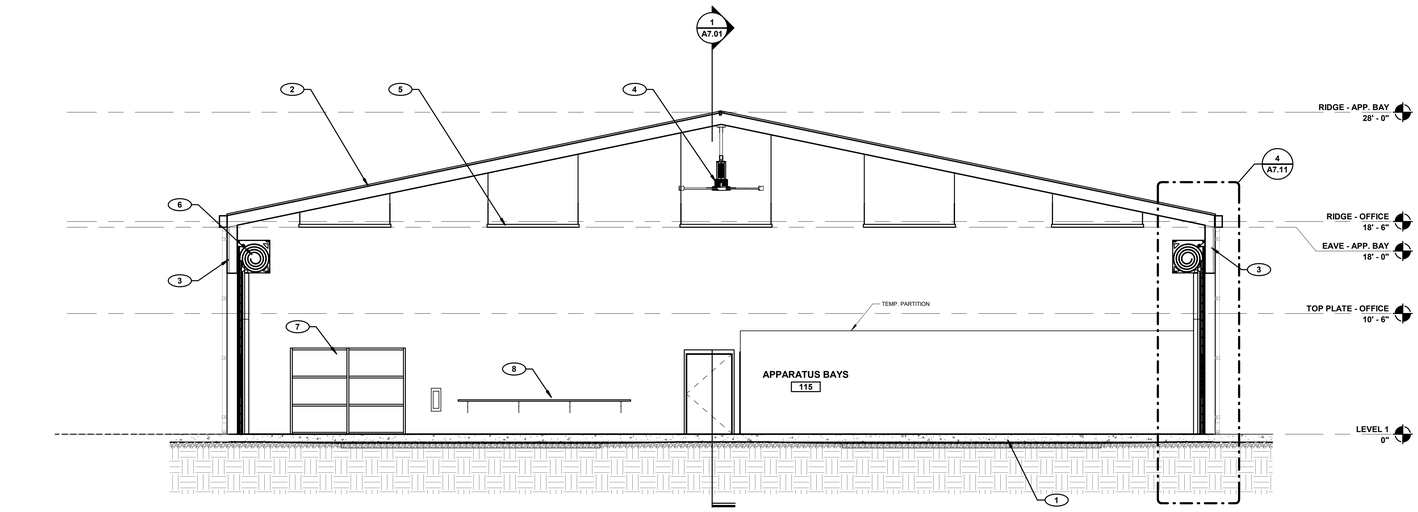

2 BUILDING SECTION - APPARATUS BAYS
SCALE: 3/16" = 1'-0"

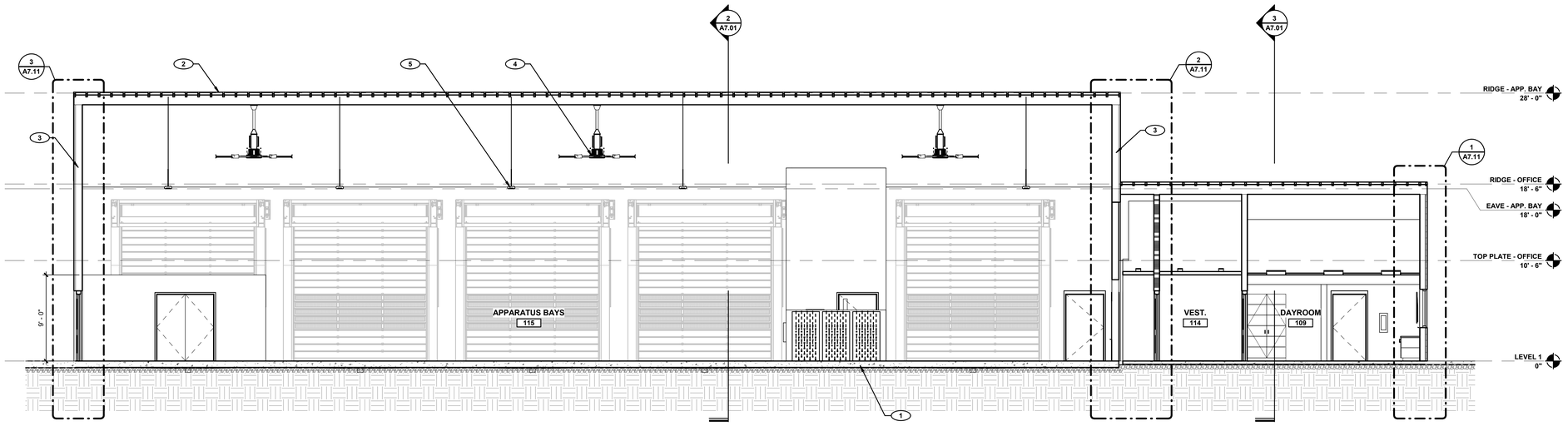

1 BUILDING SECTION - SOUTH/NORTH
SCALE: 3/16" = 1'-0"

GENERAL NOTES

1. ALL RIDGE, TOP PLATE AND EAVE ELEVATION INDICATED ARE MEASURED FROM FINISH FLOOR ELEVATION.
2. REFER TO STRUCTURAL DRAWINGS FOR FOOTING AND SLAB REQUIREMENTS.
3. ALL CONCRETE BLOCK SURFACES ADJACENT TO SOIL BERMS AND PLANTERS SHALL BE PROVIDED WITH A MONOLITHIC WATERPROOF SYSTEM EXTENDING FROM BOTTOM OF FOOTING TO 2" ABOVE SOIL.
4. REFER TO SHEET A4.11 FOR ROOF TYPES AND DETAILS.
5. REFER TO DIMENSION PLAN FOR WALL TYPES.
6. PAINT ALL EXPOSED INTERIOR AND EXTERIOR STRUCTURAL STEEL. SEE FINISH SCHEDULE AND ELEVATIONS.
7. REFER TO FINISH SCHEDULE FOR FLOOR, WALL, AND CEILING FINISHES.
8. PAINT ALL EXPOSED INTERIOR AND EXTERIOR STRUCTURAL STEEL. SEE FINISH SCHEDULE AND ELEVATIONS.
9. PROVIDE APPROPRIATE FIRE STOPPING AT ALL FIRE-RATED PARTITIONS.
10. ALL PENETRATIONS THROUGH WALLS WITH SOUND INSULATION SHALL BE SEALED TIGHT WITH ACOUSTICAL INSULATION AND SEALANT.
11. GRAY CMU IS ACCEPTABLE BELOW GRADE.
12. ALL DISSIMILAR MATERIALS TO RECEIVE SEALANT PRIOR TO PAINTING.

KEYNOTES

1. CONCRETE SLAB OVER VAPOR BARRIER AND ENGINEERED FILL, REFER TO STRUCTURAL DRAWINGS AND SOILS REPORT FOR ADDITIONAL INFORMATION
2. INSULATED STANDING SEAM METAL ROOF PANEL
3. INSULATED METAL WALL PANEL, REFER TO EXTERIOR ELEVATION
4. HIGH VOLUME, LOW VELOCITY FAN, REFER TO ELECTRICAL DRAWINGS
5. HIGH-BAY LED LIGHT FIXTURE, REFER TO ELECTRICAL DRAWINGS
6. OVERHEAD ROLL-UP DOOR WITH MID-GRAZING
7. STOREFRONT WINDOW SYSTEM
8. WALL-MOUNTED WORK BENCH
9. LIGHT FIXTURE, REFER TO ELECTRICAL DRAWINGS

tsk
314 South Water Street,
Suite 100
Henderson, NV 89015
phone: 702.456.3000
fax: 702.898.6209
www.tska.com

THESE DRAWINGS AND SPECIFICATIONS ARE THE PROPERTY OF TATE SNYDER KIMSEY ARCHITECTS AND MAY NOT BE REPRODUCED OR USED FOR ANY PURPOSE WITHOUT THE ARCHITECTS WRITTEN CONSENT.
AS INSTRUMENTS OF SERVICE, THESE DOCUMENTS ARE NOT FINAL AND READY FOR USE, AND THEREFORE NOT VALID, UNLESS THEY ARE SEALED, SIGNED AND DATED.
Copyright, Ltd 2023

Consultant

PLEASE RECYCLE

Project
WEST WENDOVER NEW FS #13

N. GENE L. JONES WAY, WEST WENDOVER, NV 89883

Job No: 22-002.00

Owner
CITY OF WEST WENDOVER

PHASE-1B DESIGN DEVELOPMENT

REVISIONS		
REV	DATE	DESCRIPTION

Sheet Title
BUILDING SECTIONS

Date: MAY 3, 2023
Sheet No:
A7.01

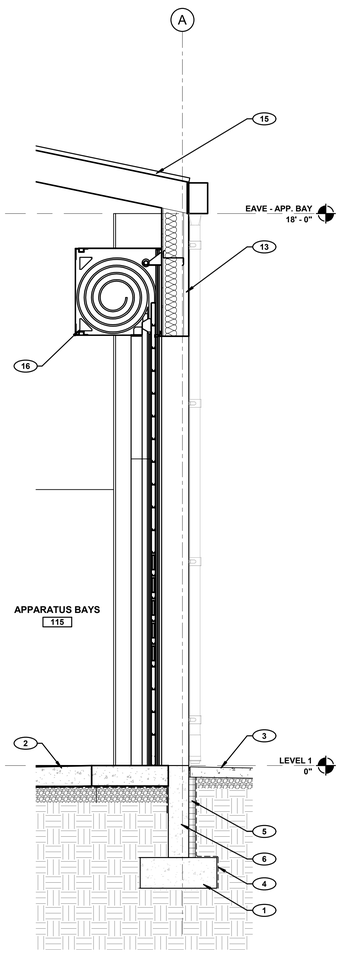

4 WALL SECTION
SCALE: 1/2" = 1'-0"

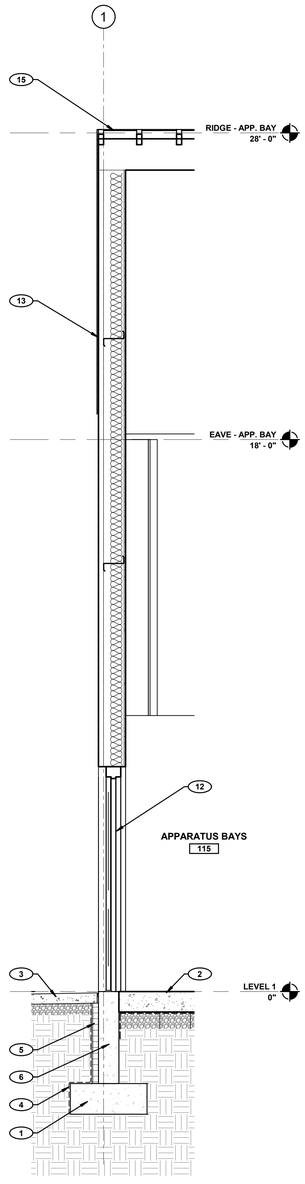

3 WALL SECTION
SCALE: 1/2" = 1'-0"

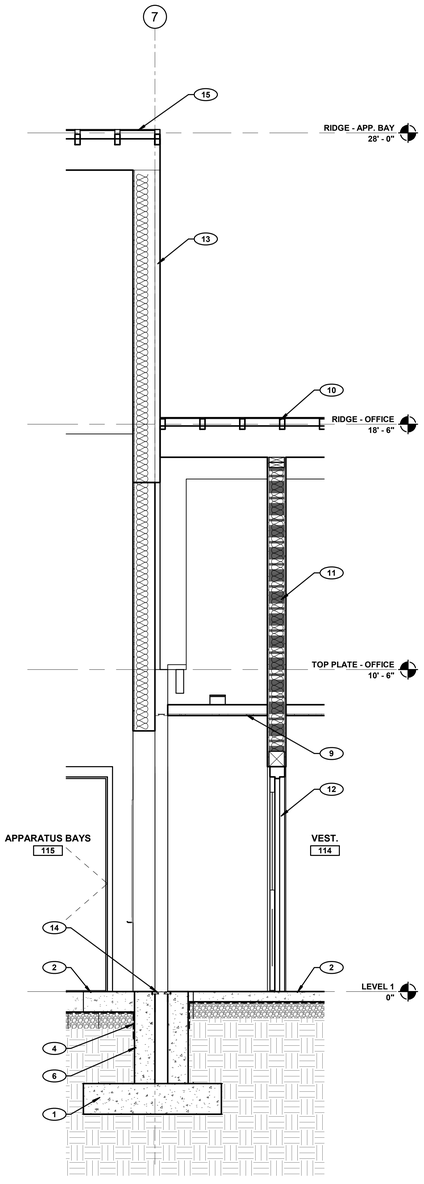

2 WALL SECTION
SCALE: 1/2" = 1'-0"

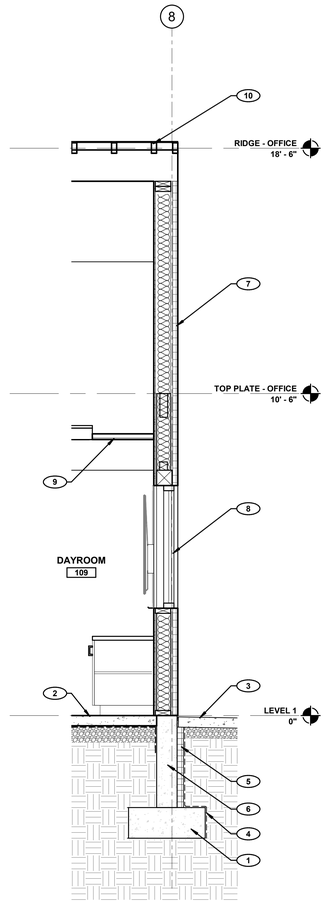

1 WALL SECTION
SCALE: 1/2" = 1'-0"

GENERAL NOTES

1. ALL RIDGE, TOP PLATE AND EAVE ELEVATION INDICATED ARE MEASURED FROM FINISH FLOOR ELEVATION.
2. REFER TO DIMENSION PLAN FOR WALL TYPES.
3. REFER TO SHEET A4.11 FOR ROOF TYPES AND DETAILS.
4. REFER TO FINISH SCHEDULE FOR FLOOR, WALL, AND CEILING FINISHES.
5. REFER TO EXTERIOR ELEVATIONS FOR EXTERIOR MATERIAL COLOR / TEXTURE.
6. PAINT ALL EXPOSED INTERIOR AND EXTERIOR STRUCTURAL STEEL. SEE FINISH SCHEDULE AND ELEVATIONS.
7. REFER TO STRUCTURAL DRAWINGS FOR FOOTING AND SLAB REQUIREMENTS.
8. ALL CONCRETE BLOCK SURFACES ADJACENT TO SOIL BERMS AND PLANTERS SHALL BE PROVIDED WITH A MONOLITHIC WATERPROOF SYSTEM EXTENDING FROM BOTTOM OF FOOTING TO 2" ABOVE SOIL.
9. GRAY CMU IS ACCEPTABLE BELOW GRADE.
10. PROVIDE APPROPRIATE FIRE STOPPING AT ALL FIRE-RATED PARTITIONS.
11. ALL PENETRATIONS THROUGH WALLS WITH SOUND INSULATION SHALL BE SEALED TIGHT WITH ACOUSTICAL INSULATION AND SEALANT.
12. ALL DISSIMILAR MATERIALS TO RECEIVE SEALANT PRIOR TO PAINTING.
13. PROVIDE EXPANSION JOINT MATERIAL BETWEEN CMU WALL AND CONCRETE FLOOR.

KEYNOTES

1. CONCRETE FOOTING, REFER TO STRUCTURAL DRAWINGS
2. CONCRETE SLAB OVER VAPOR BARRIER AND ENGINEERED FILL, REFER TO STRUCTURAL DRAWINGS AND SOILS REPORT FOR ADDITIONAL INFORMATION
3. CONCRETE APRON / SIDEWALK, REFER TO CIVIL DRAWINGS FOR ADDITIONAL INFORMATION
4. WATERPROOFING, REFER TO SPECIFICATIONS
5. PERIMETER SLAB INSULATION AT GRADE
6. CAST-IN-PLACE CONCRETE STEM WALL, REFER TO STRUCTURAL DRAWINGS
7. EXTERIOR INSULATION FINISH SYSTEM (EIFS), REFER TO EXTERIOR ELEVATIONS AND MATERIAL SCHEDULE
8. SCHEDULED WINDOW, REFER TO WINDOW TYPES AND DETAILS
9. CEILING AS SCHEDULE, REFER TO REFLECTED CEILING PLAN FOR TYPE
10. STANDING SEAM ROOFING SYSTEM
11. RATED WALL ASSEMBLY, REFER TO PARTITION TYPES AND LIFE SAFETY PLAN
12. SCHEDULED DOOR, REFER TO DOOR DETAILS AND SCHEDULE
13. INSULATED METAL WALL PANEL, REFER TO EXTERIOR ELEVATION
14. EXPANSION JOINT COVER, REFER TO STRUCTURAL DRAWINGS FOR SEISMIC SEPARATION INFORMATION
15. INSULATED STANDING SEAM METAL ROOF PANEL
16. OVERHEAD ROLL-UP DOOR WITH MID-GRAZING, REFER TO DOOR TYPES AND DOOR SCHEDULE

tsk
314 South Water Street,
Suite 100
Henderson, NV 89015
phone: 702.456.3000
fax: 702.898.6209
www.tska.com

THESE DRAWINGS AND SPECIFICATIONS ARE THE PROPERTY OF TATE SNYDER KIMSEY ARCHITECTS AND MAY NOT BE REPRODUCED OR USED FOR ANY PURPOSE WITHOUT THE ARCHITECTS WRITTEN CONSENT. AS INSTRUMENTS OF SERVICE, THESE DOCUMENTS ARE NOT FINAL AND READY FOR USE, AND THEREFORE NOT VALID, UNLESS THEY ARE SEALED, SIGNED AND DATED.

Copyright, Ltd 2023

Consultant

PLEASE RECYCLE

Project
WEST WENDOVER NEW FS #13

N. GENE L. JONES WAY, WEST WENDOVER, NV 89883

Job No: 22-002.00

Owner
CITY OF WEST WENDOVER

PHASE-1B DESIGN DEVELOPMENT

REVISIONS		
REV	DATE	DESCRIPTION

Sheet Title
WALL SECTIONS

Date: MAY 3, 2023
Sheet No:
A7.11

1.00 DESIGN DATA

1.01 BUILDING CODE - INTERNATIONAL BUILDING CODE 2018
2018 NEVADA STATE BUILDING CODE WITH NORTHERN NEVADA AMENDMENTS

1.02 DESIGN LOADS

A. WIND LOAD

BASIC WIND SPEED (3-SECOND GUST)	115 MPH
RISK CATEGORY	IV
EXPOSURE	C
INTERNAL PRESSURE COEFFICIENT, GCPI	+/- 0.55

THE WIND PRESSURE IN TERMS OF POUNDS PER SQUARE FOOT TO BE USED FOR THE DESIGN OF EXTERIOR COMPONENTS AND CLADDING MATERIALS SHALL BE INDICATED ON THE SHOP DRAWINGS SUBMITTED BY THE SUPPLIER AND CERTIFIED BY A REGISTERED ENGINEER IN THE STATE OF THE PROJECT.

B. ROOF LOADS

LIVE LOAD (L.L.)	20 PSF**
DEAD LOAD (DESIGN D.L.)	20 PSF

C. ROOF SNOW LOAD

GROUND SNOW LOAD, PG	30 PSF
FLAT-ROOF SNOW LOAD, PF	25.2 PSF***
SNOW EXPOSURE FACTOR, CE	1.0
SNOW LOAD IMPORTANCE FACTOR, I	1.2
THERMAL FACTOR, C_T	1.0

D. EARTHQUAKE DESIGN DATA

SEISMIC RISK CATEGORY	IV
IMPORTANCE FACTOR	1.5
SITE CLASS	D
SPECTRAL RESPONSE ACCELERATION S_S	1.538
SPECTRAL RESPONSE ACCELERATION S_1	2.346
SPECTRAL RESPONSE COEFFICIENTS SD_S	0.336
SPECTRAL RESPONSE COEFFICIENTS SD_1	0.178
SEISMIC DESIGN CATEGORY	D
BASIC SEISMIC-FORCE-RESISTING SYSTEM BY PEMB ENGINEER)	STEEL INTERMEDIATE MOMENT FRAMES (APPARTUS BAY – TO BE CONFIRMED
	LIGHT-FRAMED (WOOD) WALLS SHEATHED WITH WOOD STRUCTURAL PANELS (OFFICE)
ANALYSIS PROCEDURE	EQUIVALENT LATERAL FORCE SYSTEM
SEISMIC RESPONSE MODIFICATION FACTOR R	4.5 (APPARTUS BAY – TO BE CONFIRMED BY PEMB ENGINEER) 6.5 (OFFICE)
SEISMIC RESPONSE COEFFICIENTS C_S	0.112 (APPARTUS BAY – TO BE CONFIRMED BY PEMB ENGINEER) 0.078 (OFFICE)
DESIGN BASE SHEAR	XXX K (APPARTUS BAY – TO BE CONFIRMED BY PEMB ENGINEER) 9.3 K (OFFICE)

E. SLAB ON GRADE – SEE LOADING PLAN

**REDUCIBLE PER IBC, SECTION 1607.12
***PLUS SNOW ACCUMULATION AS REQUIRED BY IBC, SECTION 1608

2.00 DESIGN DATA

2.01 THE PROJECT IS NOT DESIGNED FOR FUTURE EXPANSION.

3.00 DIMENSIONS

3.01 BEFORE STARTING WORK, THE CONTRACTOR SHALL VERIFY ALL DIMENSIONS ON THE SITE, AND REPORT ANY DISCREPANCIES IMMEDIATELY TO THE ENGINEER.

3.02 THE CONTRACTOR, BEFORE STARTING ANY WORK, SHALL CHECK ALL DIMENSIONS GIVEN ON THE STRUCTURAL DRAWINGS, RELATING TO GRID LINES, COLUMN AND WALL LOCATIONS, STRUCTURAL AND FINISHED FLOOR ELEVATIONS, MEMBER SIZES, ETC., WITH THE ARCHITECTURAL, TRAFFIC, AND CIVIL DRAWINGS. IF ANY DISCREPANCY IS NOTICED, IT SHALL BE IMMEDIATELY BROUGHT TO THE ATTENTION OF THE ARCHITECT AND THE ENGINEER, AND WORK SHALL NOT COMMENCE UNTIL INSTRUCTIONS ARE RECEIVED FROM THE ENGINEER

3.03 THE CONTRACTOR SHALL REFER TO THE ENGINEER FOR INSTRUCTIONS FOR ANY DIMENSION NOT GIVEN ON OR OBTAINABLE FROM THE DRAWINGS. THE CONTRACTOR SHALL NOT USE SCALE TO OBTAIN OR VERIFY ANY DIMENSION SHOWN ON THESE DRAWINGS.

4.00 DOCUMENTS AND LIMITATIONS

4.01 THIS STRUCTURAL DOCUMENT, TOGETHER WITH THE CONCEPTS AND DESIGNS PRESENTED HEREIN, AS AN INSTRUCMENT OF SERVICE, ARE INTENDED ONLY FOR THE SPECIFIC PURPOSE AND CLIENT FOR WHICH IT WAS PREPARED. REUSE OF AND IMPROPER RELIANCE ON THIS DOCUMENT WITHOUT WRITTEN AUTHORIZATION AND ADAPTATION BY KIMLEY-HORN AND ASSOCIATES, INC. SHALL BE WITHOUT LIABILITY TO KIMLEY-HORN AND ASSOCIATES, INC.

4.02 IT IS UNDERSTOOD THAT THE STRUCTURAL ENGINEER OF RECORD MAKES NO WARRANTY, EITHER EXPRESSED OR IMPLIED, AS TO FINDINGS, DESIGNS, RECOMMENDATIONS, SPECIFICATIONS, OPINION, OR PROFESSIONAL ADVICE, EXCEPT THAT THESE INSTRUMENTS OF SERVICE HAVE BEEN PREPARED IN ACCORDANCE WITH THE CURRENT GENERALLY ACCEPTED PROFESSIONAL ENGINEERING PRACTICES.

4.03 ALL NON-STRUCTURAL ELEMENTS INDICATED ON THE STRUCTURAL DRAWINGS HAVE BEEN SHOWN IN GENERAL RELATIONSHIP TO THE STRUCTURAL ELEMENTS. ACCORDINGLY, THEY SHALL NOT BE ASSUMED TO BE ACCURATE AND REFERENCE MUST BE MADE TO THE APPROPRIATE CONSULTANT(S) PLANS AND SPECIFICATIONS.

4.04 EXISTING CONSTRUCTION AND GRIDLINES MAY BE SHOWN FOR REFERENCE. THIS INFORMATION WAS TAKEN FROM RECORD DOCUMENTS PROVIDED BY THE OWNER. IT SHALL BE THE CONTRACTOR'S RESPONSIBILITY TO FIELD–VERIFY THE EXISTING MEMBER SIZES, ELEVATIONS AND DIMENSIONS PRIOR TO BEGINNING WORK IN A GIVEN AREA.

5.00 CONSTRUCTION SAFETY

5.01 IT IS UNDERSTOOD THAT THE CONTRACTOR IS SOLELY RESPONSIBLE FOR INITIATING, MAINTAINING, AND SUPERVISING ALL SAFETY PRECAUTIONS AND PROGRAMS IN CONNECTION WITH THE WORK ON THE PROJECT. THE CONTRACTOR SHALL TAKE ALL NECESSARY PRECAUTIONS FOR THE SAFETY OF THE PERSONS AND PROTECT THEM AGAINST INJURY. LIKEWISE, THE CONTRACTOR SHALL PROTECT ALL PROPERTY AGAINST DAMAGE AND LOSS.

5.02 THE CONTRACTOR SHALL COMPLY WITH ALL APPLICABLE LAWS, ORDINANCES, RULES, REGULATIONS, AND ORDERS OF ANY PUBLIC BODY HAVING JURISDICTION FOR THE SAFETY OF PERSONS AND PROPERTY.

5.03 THE CONTRACTOR'S DUTIES AND RESPONSIBILITIES FOR THE SAFETY AND PROTECTION OF THE WORK SHALL CONTINUE UNTIL SUCH TIME AS THE WORK IS SATISFACTORILY COMPLETED, AND THE ENGINEER HAS ISSUED A NOTICE TO THAT EFFECT TO THE OWNER AND THE CONTRACTOR.

5.04 ALL STRUCTURAL MEMBERS SHOWN HEREIN HAVE BEEN DESIGNED FOR THE FINAL DESIGN LOADS PROVIDED IN THIS DOCUMENT IN THE FINAL ERECTED CONDITION SHOWN HEREIN. THE CONTRACTOR IS RESPONSIBLE FOR CONDITIONS ENCOUNTERED DURING ERECTION AND HANDLING, AND NECESSARY TEMPORARY BRACING AND SHORING. SHORING AND BRACING SHALL BE DESIGNED TO PRECLUDE ANY STRUCTURAL ELEMENT FROM BEING OVERSTRESSED AT ANY POINT DURING CONSTRUCTION. SHORING SHALL BE DESIGNED BY A PROFESSIONAL ENGINEER LICENSED IN THE STATE OF THE PROJECT AND DRAWINGS SHALL BE SIGNED AND SEALED.

6.00 FORMWORK, SHORING, AND RE SHORING

6.01 THE CONTRACTOR SHALL EMPLOY, AT HIS EXPENSE, A FORMWORK/SHORING ENGINEER REGISTERED IN THE STATE OF THE PROJECT TO CONTROL ALL OPERATIONS RELATING TO DESIGN, INSTALLATION, AND REMOVAL OF ALL FORMWORK, SHORING, AND RESHORING.

6.02 CONTRACTOR SHALL SUBMIT SHOP DRAWINGS FOR FABRICATION, ERECTION, SUPPORT, AND BRACING OF FORMWORK, SHORING, AND RESHORING PROCEDURES FOR THE ENGINEER'S RECORDS.

6.03 PRIOR TO PLACEMENT OF CONCRETE, THE FORMWORK/SHORING ENGINEER SHALL INSPECT THE SHORING (AND AGAIN IF THERE ARE ANY CHANGES IN THE METHOD OF SHORING", TO VERIFY THAT THE SHORING INSTALLATION IS IN CONFORMANCE WITH THE SHORING DRAWINGS. A WRITTEN STATEMENT OF COMPLIANCE SIGNED BY THE SHORING ENGINEER SHALL BE SUBMITTED TO THE OWNER.

6.04 CONTINUOUS SHORING SHALL BE PROVIDED AT THE CENTER OF ALL SLAB SPANS AND BEAM SPANS FOR A MINIMUM OF 14 DAYS, WHERE NOT POST-TENSIONED OR OTHERWISE APPROVED BY THE ENGINEER.

7.00 SHOP DRAWINGS

7.01 REVIEW OF SHOP DRAWINGS BY THE ENGINEER IS LIMITED TO COMPLIANCE OF THE COMPLETED STRUCTURE WITH THE DESIGN CONCEPT AND INFORMATION GIVEN IN THE CONTRACT DOCUMENTS. THE CONTRACTOR IS SOLELY RESPONSIBLE FOR DIMENSIONS, QUANTITIES, PERFORMANCE, SAFETY, COORDINATION WITH OTHER WORK, AND ALL OTHER REQUIREMENTS OF THE CONTRACT DOCUMENTS. REVIEW DOES NOT AUTHORIZE CHANGES TO CONTRACT.

7.02 THE CONTRACTOR SHALL SUBMIT SHOP DRAWINGS TO THE ENGINEER FOR HIS REVIEW IN ACCORDANCE WITH A SCHEDULE OF SUBMITTALS ACCEPTABLE TO THE ENGINEER. THESE SHOP DRAWINGS SHALL HAVE BEEN CHECKED BY AND STAMPED WITH THE APPROVAL OF THE CONTRACTOR, AND IDENTIFIED AS THE ENGINEER MAY REQUIRE. THE DATA SHOWN ON THE SHOP DRAWINGS SHALL BE COMPLETE WITH RESPECT TO DIMENSIONS, DESIGN CRITERIA, AND DULY SIGNED AND SEALED BY A PROFESSIONAL ENGINEER REGISTERED IN THE STATE OF THE PROJECT.

8.00 DEFERRED SUBMITTALS

8.01 THE FOLLOWING SUBMITTALS ARE DEFERRED FOR THEIR DESIGN TO BE PROVIDED BY THE SUPPLIER:
A. PRE-ENGINEERED METAL BUILDING AND BASE PLATES
B. WOOD ROOF TRUSS
C. ATTACHMENT OF EXTERIOR WALL OR ROOF MOUNTED ASSEMBLIES INCLUDING, BUT NOT LIMITED TO ROOF HATCHES, LOUVERS, ETC
D. TEMPORARY EARTH RETENTION SYSTEMS AND UNDERPINNING.
E. TEMPORARY SHORING AND RESHORING SYSTEMS.

8.02 DOCUMENTS FOR THE DEFERRED SUBMITTAL ITEMS SHALL BE SUBMITTED A MINIMUM OF 30 DAYS BEFORE ITEMS ARE TO BE INSTALLED. THESE ITEMS ARE TO BE REVIEWED BY THE GENERAL CONTRACTOR AND THE ENGINEER OF RECORD FOR GENERAL CONFORMANCE WITH THE CONSTRUCTION DOCUMENTS. REFER TO THE PROJECT MANUAL FOR DEFERRED SUBMITTAL DESIGN QUALIFICATIONS AND ADDITIONAL DEFERRED SUBMITTAL REQUIREMENTS.

9.00 FIELD MODIFICATION

9.01 WRITTEN AUTHORIZATION FROM THE STRUCTURAL ENGINEER OF RECORD IS REQUIRED FOR ALL FIELD MODIFICATIONS TO THE STRUCTURAL SYSTEM INCLUDING, BUT NOT LIMITED TO, BEAM AND COLUMN CONNECTIONS, JOIST AND JOIST GIRDER CONNECTIONS, JOIST BRIDGING, CUTTING OR DRILLING THROUGH ANY STRUCTURAL ELEMENT, CUTTING OR THE RELOCATION OF PT. OR MILD STEEL REINFORCEMENT, EMBED PLATES AND BOLTS, TILT-UP AND PRECAST WALL CONNECTIONS, ETC.

10.00 SPECIAL INSPECTIONS

10.01 SPECIAL INSPECTIONS WILL BE PROVIDED IN COMPLIANCE WITH THE STATEMENT OF SPECIAL INSPECTIONS

10.02 OWNER WILL ENGAGE A SPECIAL INSPECTOR AND QUALIFIED TESTING AND INSPECTING AGENCY TO PERFORM FIELD TESTS AND INSPECTIONS, AND PREPARE TEST REPORTS.

10.03 THE GENERAL CONTRACTOR SHALL ASSIST AND COOPERATE WITH AN INDEPENDENT TESTING LABORATORY (TO BE RETAINED BY THE OWNER) WHICH SHALL CONDUCT ALL THE SPECIFIED TESTS REQUIRED FOR THE PROJECT AND REPORT THE RESULTS OF THESE TESTS DIRECTLY AND PROMPTLY TO THE ENGINEER FOR HIS REVIEW.

10.04 CONTRACTOR SHALL NOTIFY SPECIAL INSPECTOR AND TESTING AGENCY 48 HOURS IN ADVANCE OF ITEMS REQUIRED FOR SPECIAL INSPECTION.

10.05 ALL SPECIAL INSPECTION MONTHLY REPORTS SHALL BE SIGNED AND SEALED BY AN ENGINEER LICENSED IN THE STATE OF_____, WHO HAS RESPONSIBLE CHARGE OF THE SPECIAL INSPECTIONS PROGRAM.

10.06 A SPECIAL INSPECTIONS MEETING SHALL BE HELD ON SITE WITH ENGINEER OF RECORD, CONSTRUCTION COORDINATOR, INDEPENDENT TESTING AGENCY, AND SPECIAL INSPECTOR TO CLARIFY ALL SPECIAL INSPECTION REQUIREMENTS PRIOR TO BEGINNING WORK.

11.00 FOUNDATIONS

11.01 FOUNDATIONS, RETAINING & BASEMENT WALLS, FOUNDATION DRAINAGE, SLABS ON GRADE & OTHER ITEMS RELATED TO THE SOILS ARE DESIGNED & SHALL BE CONSTRUCTED IN ACCORDANCE WITH THE RECOMMENDATIONS OF SUMMIT ENGINEERING CORPORATION JOB NO. 3-82965 DATED NOVEMBER 25, 2022.

11.02 DESIGN NET SOIL BEARING CAPACITY IS AS FOLLOWS:

SPREAD FOOTINGS	2,500 PSF
STRIP FOOTINGS	2,500 PSF

11.03 ALLOWABLE ACTIVE PRESSURE 35 PSF/ FT

11.04 ALLOWABLE PASSIVE PRESSURE 407 PSF/FT

11.05 COEFFICIENT OF FRICTION 0.32

11.06 MINIMUM DEPTH FROM EXTERIOR GRADE TO BOTTOM OF BUILDING PERIMETER FOOTINGS SHALL BE 3'-0".

11.07 SLABS ON GRADE ARE DESIGNED USING A MODULUS OF SUBGRADE REACTION OF 200 PCI.

11.08 ALL UNDERPINNING OF EXISTING FOUNDATIONS THAT MAY BE REQUIRED FOR A TEMPORARY OR PERMANENT CONDITION, SHALL BE THE SOLE RESPONSIBILITY OF THE GENERAL CONTRACTOR. PRIOR TO THE WORK BEING PERFORMED, DRAWINGS AND CALCULATIONS FOR THE PROPOSED METHOD OF UNDERPINNING, SIGNED BY A PROFESSIONAL ENGINEER, SHALL BE PROVIDED TO THE ENGINEER OF RECORD FOR REVIEW.

12.00 CONCRETE MATERIAL PROPERTIES

12.01 CONCRETE STRENGTH: F'C PSI
A. FOOTINGS, 4500
B. FOUNDATION WALLS 4500
C. INTERIOR SLAB-ON-GRADE 4000

13.00 REINFORCING

13.01 MATERIAL PROPERTIES:

	FY, KSI	ASTM
A. ALL BARS UNLESS NOTED	60	A615
B. TIES & STIRRUP	60	A615
C WELDED WIRE FABRIC (SMOOTH)	65	A185
D. POST-TENSIONING STRAND	270 FPU	A416
E WELDABLE REBAR	60	A706

14.00 CAST-IN-PLACE

14.01 ALL CONCRETE SHALL BE DESIGNED AND CONSTRUCTED IN ACCORDANCE WITH IBC CHAPTER 19 & ACI-318, LATEST CODE ADOPTED EDITION.

14.02 ALL REINFORCING SHALL BE DETAILED, FABRICATED & PLACED IN ACCORDANCE WITH CRSI "MANUAL OF STANDARD PRACTICE", LATEST EDITION.

14.03 ALL CAST IN PLACE CONCRETE AND POST INSTALLED ANCHORS SHALL BE DESIGNED IN ACCORDANCE WITH APPENDIX D OF ACI 318 AS MODIFIED BY THE APPLICABLE BUILDING CODE.

14.04 SPACING OF CONSTRUCTION OR CONTROL JOINTS IN WALLS EXPOSED TO VIEW SHALL NOT EXCEED 40 FEET UNLESS SPECIFICALLY NOTED OTHERWISE ON THE DRAWINGS. CUT HALF OF THE HORIZONTAL REINFORCING AT CONTROL JOINTS.

14.05 SLEEVES EMBEDDED IN SLABS AND WALLS SHALL BE LOCATED CLEAR BETWEEN REINFORCING BARS AND SHALL MAINTAIN CLEAR SPACING EQUAL TO THE DIAMETER OF THE LARGEST SLEEVE IN ANY DIRECTION. SLEEVE GROUPS THAT DO NOT COMPLY WITH THE ABOVE REQUIREMENTS SHALL BE CONSIDERED AS AN OPENING AND REINFORCED PER NOTE BELOW.

14.06 UNLESS NOTED OTHERWISE ON THE DRAWINGS: PROVIDE EXTRA REINFORCING ON ALL SIDES OF ALL MISCELLANEOUS WALL AND SLAB OPENINGS EQUAL TO ONE HALF THE INTERRUPTED REINFORCING BARS EACH SIDE BUT NOT LESS THAN 2 - #5 FOR EACH LAYER OF REINFORCEMENT. EXTEND BARS CLASS 'B' LAP LENGTH BUT NOT LESS THAN 2 FEET BEYOND EDGE OF OPENINGS. PROVIDE 2 - #4X4'-0" DIAGONAL BARS AT EACH CORNER FOR EACH LAYER OF REINFORCEMENT.

14.07 IN CAST-IN-PLACE CONCRETE WORK, NO OPENINGS SHALL BE PERMITTED IN SLABS WITHIN A DISTANCE OF EIGHT INCHES FROM THE FACE OF A COLUMN OR EDGE OF SLAB. OPENINGS BETWEEN EIGHT TO TWENTY FOUR INCHES FROM THE FACE OF THE COLUMN OR EDGE OF SLAB SHALL NOT GENERALLY BE PERMITTED EXCEPT WITH THE SPECIFIC APPROVAL OF THE ENGINEER. OPENINGS LOCATED GREATER THAN TWO FEET FROM THE FACE OF THE COLUMN OR EDGE OF SLAB ARE GENERALLY PERMITTED, SUBJECT TO APPROVAL OF THE ENGINEER.

14.08 NO DRILLING THROUGH WALLS SHALL BE CARRIED OUT EXCEPT WITH THE SPECIFIC APPROVAL OF THE ENGINEER. SUCH APPROVAL, IF GRANTED, SHALL BE ON A CASE BY CASE BASIS. CONTRACTOR SHALL BE RESPONSIBLE FOR VERIFYING REINF LAYOUT USING NDT PRIOR TO DRILLING INTO CAST CONCRETE .

14.10 DETAILING OF REBAR SHALL BE IN ACCORDANCE WITH THE LATEST REVISION OF THE ACI DETAILING MANUAL, AND CONCRETE REINFORCING INSTITUTE'S LATEST EDITION OF "MANUAL OF STANDARD PRACTICE". ALL SHOP DRAWINGS PERTAINING TO REBAR DETAILS SHALL BE SUBMITTED TO THE ENGINEER FOR HIS REVIEW.CONCRETE MIX DESIGN FOR ALL CONCRETE WORK IS REQUIRED TO BE SUBMITTED TO THE ENGINEER FOR REVIEW.

14.11 CONCRETE SUPPLIER SHALL HAVE A QUALITY CONTROL PROCEDURE FOR THE PRODUCTION OF ALL CONCRETE, WHICH MUST BE ACCEPTABLE TO THE ENGINEER AND MEETS CURRENT ACI STANDARDS.

14.12 CONSTRUCTION JOINTS SHALL BE AS APPROVED BY THE STRUCTURAL ENGINEER AND THE ARCHITECT.

14.13 EMBEDDED ITEMS THAT WILL SUPPORT STRUCTURAL STEEL CONSTRUCTION SHALL BE PLACED WITHIN THE TOLERANCES PRESCRIBED IN THE LATEST EDITION OF THE AISC "CODE OF STANDARD PRACTICE". GENERAL CONTRACTOR SHALL FIELD VERIFY LOCATION OF EMBEDDED ITEMS PRIOR TO FABRICATION AND DELIVERY OF STRUCTURAL STEEL TO THE PROJECT SITE. SHOP DRAWINGS FOR CAST-IN-PLACE CONCRETE SHALL INCLUDE LOCATIONS AND COORDINATION OF ALL EMBEDS INCLUDING PRECAST SUPPORTS.

14.14 LAP SPLICES ARE ALL CLASS B TENSION LAP SPLICES, UNO.

14.15 PROVIDE A 3/4" CHAMFER ON ALL EXPOSED CORNERS OF CONCRETE.

14.16 PROVIDE ISOLATION JOINTS AROUND COLUMNS AT SLAB ON GRADE AREAS.

14.17 THE FOLLOWING MINIMUM CONCRETE COVER SHALL BE PROVIDED FOR REINFORCEMENT:

A. CONCRETE CAST AGAINST & PERMANENTLY EXPOSED TO EARTH	3"
B. CONCRETE EXPOSED TO EARTH OR WEATHER:	
#6 THRU # 18 BARS	2"
# 5 & SMALLER BARS	1 ½"
C. CONCRETE NOT EXPOSED TO WEATHER OR IN CONTACT WITH GROUND:	
SLABS & WALLS:	
#14 & #18 BARS	1 ½"
#11 & SMALLER BARS	¾"

15.00 STRUCTURAL STEEL

15.01 STRUCTURAL STEEL DESIGN & CONSTRUCTION SHALL CONFORM TO IBC CHAPTER 22, SECTION 2201, AISC "LOAD & RESISTANCE FACTOR DESIGN SPECIFICATION FOR STRUCTURAL STEEL BUILDINGS" & AISC "CODE OF STANDARD PRACTICE" LATEST CODE ADOPTED EDITION, UNO.

15.02 STRUCTURAL STEEL SUPPLIER SHALL SUBMIT SHOP DRAWINGS AND CALCULATIONS CERTIFIED BY A PROFESSIONAL ENGINEER REGISTERED IN THE STATE OF THE PROJECT FOR ALL CAP PLATES, BEARING PLATES, BASE PLATES, STIFFENERS, SPLICES & CONNECTIONS DESIGNED BY THE SUPPLIER.

15.03 STRUCTURAL STEEL SUPPLIER SHALL FURNISH BOLTS AT COLUMNS AND ELSEWHERE FOR OSHA CONNECTIONS. BOLT HOLES IN BEAM TOP FLANGE SHALL BE MAXIMUM 9/16" DIA. FOR "K" SERIES JOISTS AND 13/16" DIA. FOR "LH" SERIES JOISTS. STRUCTURAL STEEL AND JOIST SUPPLIERS SHALL COORDINATE OSHA CONNECTION LOCATIONS.

15.04 PROVIDE PROTECTIVE ASPHALTIC COATING OR EQUAL AROUND STRUCTURAL STEEL BELOW GRADE.

15.05 IN LIEU OF THE FABRICATION TOLERANCES SPECIFIED IN SECTION 6.4.4 OF AISC "CODE OF STANDARD PRACTICE FOR STEEL BUILDINGS AND BRIDGES" BEAMS WITH CAMBERS SHALL BE FABRICATED WITH A CAMBER TOLERANCE OF -0", + 1/2". MILL CAMBERED BEAMS SHALL BE MODIFIED AS NECESSARY IN THE FABRICATION SHOP TO MEET THE ABOVE CRITERIA. SINGLE POINT CAMBERING IS NOT ALLOWED.

15.06 BEAM CAMBERS SHALL BE VERIFIED IN THE FABRICATION SHOP BY AN INDEPENDENT TESTING AGENCY AND THE INSPECTION DOCUMENTATION SHALL BE PROVIDED TO THE STRUCTURAL ENGINEER OF RECORD FOR REVIEW.

15.07 THIS STRUCTURE IS A NON-SELF SUPPORTING STEEL FRAME REQUIRING INTERACTION WITH OTHER ELEMENTS TO PROVIDE THE REQUIRED STABILITY. THE STEEL ERECTOR SHALL PROVIDE TEMPORARY BRACING UNTIL FINAL STABILITY IS PROVIDED. AS A MINIMUM, TEMPORARY BRACING SHALL BE PROVIDED AT EACH GRID IN BOTH DIRECTIONS.

15.08 BOLTED CONNECTIONS SHALL BE 3/4" DIA., A325 BEARING-TYPE WITH THREADS INCLUDED IN THE SHEAR PLANE. UNO, INSTALL BOLTS IN PROPERLY ALIGNED HOLES AND TIGHTEN USING ONE OF THE FOLLOWING METHODS: SNUG-TIGHT CONDITION, TURN-OF-THE-NUT METHOD, A DIRECT TENSION INDICATOR, OR CALIBRATED WRENCH AS DEFINED BY THE LATEST EDITION OF AISC "SPECIFICATION FOR STRUCTURAL JOINTS USING ASTM A325 OR A490 BOLTS".

15.09 SHEAR CONNECTORS SHALL BE 3/4" DIAMETER BY THE TOTAL FLOOR THICKNESS MINUS 1" IN LENGTH, HEADED STUDS PER AISC SPECIFICATION, LATEST EDITION. THE SPECIFIED LENGTH IS THE NET STUD LENGTH AFTER INSTALLATION. STUDS SHALL BE FIELD WELDED TO THE TOP FLANGE OF THE BEAMS THROUGH THE STEEL DECK UNITS USING AUTOMATICALLY TIMED STUD ARC WELDING EQUIPMENT. OTHER WELDING PROCESSES MUST BE APPROVED BY THE STRUCTURAL ENGINEER OF RECORD PRIOR TO INSTALLATION.

15.10 COMPOSITE SLABS SHALL BE POURED TO A CONSISTENT THICKNESS.

15.11 ROOF BEAMS ARE DESIGNED IN ACCORDANCE WITH AISC LRFD SPECIFICATION, CONTINUOUS BEAM PLASTIC DESIGN, LATEST EDITION.

15.12 STRUCTURAL STEEL IN EXTERIOR LOCATIONS SHALL BE GALVANIZED, UNO. SEE ARCH FOR FINAL FINISH OR FIRE PROOFING AT INTERIOR LOCATIONS OR AS NOTED ON THE DRAWINGS.

16.00 STEEL DECK

16.13 ALL STEEL DECKS SHALL BE DESIGNED & CONSTRUCTED IN ACCORDANCE WITH IBC CHAPTER 22, SECTION 2210.1.1 – COLD-FORMED STEEL AND THE STEEL DECK INSTITUTE SPECIFICATIONS AND RECOMMENDATIONS, LATEST CODE ADOPTED EDITION UNO.

16.14 PRE-APPROVED DECK MANUFACTURERS ARE VULCRAFT, WHEELING, AND VERCO. OTHER METAL DECK MANUFACTURERS MAY BE APPROVED PROVIDING THAT THE DECK SPECIFICATIONS MEET OR EXCEED THE SPECIFICATIONS OF THE PRE-APPROVED MANUFACTURERS. METAL DECK SIZE, GAUGE AND TYPE ARE INDICATED ON THE DRAWINGS.

16.15 ROOF DECK SHALL BE PRIME PAINTED AND LAID OUT CONTINUOUS OVER THREE SPANS MINIMUM. YIELD STRESS SHALL BE 33,000 PSI MINIMUM. DECK SUPPLIER SHALL SUBMIT ICC REPORTS SHOWING ALLOWABLE DIAPHRAGM SHEAR VALUES. ERECT IN ACCORDANCE WITH THE REPORT TO MEET THE REQUIRED SHEAR SPECIFIED ON THE DRAWINGS. CONNECTION TO FRAMING MEMBERS SHALL NOT BE LESS THAN THAT SHOWN ON DRAWINGS.

16.16 MINIMUM REQUIREMENTS FOR ROOF DECK FASTENING SHALL BE 5/8" Ø PUDDLE WELDS USING THE WELD PATTERN SHOWN ON THE DRAWINGS AND #10 TEK SCREW SIDELAP FASTENERS PER FASTENING DETAILS SHOWN ON THE DRAWINGS OR PRE-APPROVED EQUAL.

16.17 STRUCTURAL SLAB FORM (METAL CENTERING) SHALL BE UNCOATED AT TOP, PRIME PAINTED AT BOTTOM, DESIGNED FOR THE SPANS AND SLAB DEAD LOADS AS SHOWN ON THE DRAWINGS & INSTALLED IN ACCORDANCE WITH SDI SPECIFICATIONS, LATEST EDITION AND MANUFACTURER'S REQUIREMENTS.

16.18 COMPOSITE METAL FLOOR DECK SHALL BE PHOSPHATIZED/PAINTED AT TOP, PRIME PAINTED AT BOTTOM AND LAID OUT FOR THREE SPANS WHERE POSSIBLE. THE COMPOSITE FLOOR SYSTEM SHALL BE CAPABLE OF SUPPORTING THE SUPERIMPOSED LOADS AS SHOWN ON THE DRAWINGS. THE STEEL DECK SHALL SUPPORT THE WEIGHT OF WET CONCRETE AND OTHER CONSTRUCTION LOADS AS AN UNSHORED FORM DECK. DECK FASTENING SHALL BE PER SDI & MANUFACTURER'S RECOMMENDATIONS BUT NOT LESS THAN THAT SHOWN ON THE DRAWINGS.

16.19 ALL METAL DECK TO BE SPRAY FIREPROOFED SHALL BE GALVANIZED, CLEANED & DEGREASED PRIOR TO SHIPPING. SEE ARCHITECTURAL DRAWINGS FOR EXTENT OF FIREPROOFING.

16.20 CONDUITS ARE NOT PERMITTED IN COMPOSITE SLABS WITHOUT AUTHORIZATION FROM THE STRUCTURAL ENGINEER.

17.00 STEEL

17.01 STEEL MATERIAL PROPERTIES

		FY, PSI	ASTM
A.	STRUCTURAL WIDE FLANGE SHAPES	50,000	A992
B.	OTHER STRUCT. SHAPES & PLATES	36,000	A36
C.	HIGH STRENGTH BOLTS, UNO	92,000 (1" AND SMALLER)	A325
D.	ANCHOR RODS	36,000 UNO	F1554
E.	WELDING ELECTRODES	E70XX	AWS D1.3 CHAPTER 5
F.	DECK WELDING ELECTRODES	E60XX OR E70XX	AWS D1.3 CHAPTER 1
G.	STRUCTURAL PIPES	35,000	A53 GRADE B
H.	RECTANGULAR & SQUARE HSS	46,000	A500 GRADE C
I.	ROUND HSS	42,000	A500 GRADE C
J.	HEADED STUDS, TYPE B (FU = 65,000)	51,000	AWS D1.1 CHAPTER 7

17.02 STRUCTURAL STEEL DESIGN & CONSTRUCTION SHALL CONFORM TO IBC CHAPTER 22, SECTION 2201, AISC "LOAD & RESISTANCE FACTOR DESIGN SPECIFICATION FOR STRUCTURAL STEEL BUILDINGS" & AISC "CODE OF STANDARD PRACTICE" LATEST CODE ADOPTED EDITION, UNO.

17.03 STRUCTURAL STEEL SUPPLIER SHALL FURNISH BOLTS AT COLUMNS AND ELSEWHERE FOR OSHA CONNECTIONS. BOLT HOLES IN BEAM TOP FLANGE SHALL BE MAXIMUM 9/16" DIA. FOR "K" SERIES JOISTS AND 13/16" DIA. FOR "LH" SERIES JOISTS. STRUCTURAL STEEL AND JOIST SUPPLIERS SHALL COORDINATE OSHA CONNECTION LOCATIONS.

17.04 PROVIDE PROTECTIVE ASPHALTIC COATING OR EQUAL AROUND STRUCTURAL STEEL BELOW GRADE.

17.05 IN LIEU OF THE FABRICATION TOLERANCES SPECIFIED IN SECTION 6.4.4 OF AISC "CODE OF STANDARD PRACTICE FOR STEEL BUILDINGS AND BRIDGES" BEAMS WITH CAMBERS SHALL BE FABRICATED WITH A CAMBER TOLERANCE OF -0", + 1/2". MILL CAMBERED BEAMS SHALL BE MODIFIED AS NECESSARY IN THE FABRICATION SHOP TO MEET THE ABOVE CRITERIA. SINGLE POINT CAMBERING IS NOT ALLOWED.

17.06 BEAM CAMBERS SHALL BE VERIFIED IN THE FABRICATION SHOP BY AN INDEPENDENT TESTING AGENCY AND THE INSPECTION DOCUMENTATION SHALL BE PROVIDED TO THE STRUCTURAL ENGINEER OF RECORD FOR REVIEW.

17.07 BOLTED CONNECTIONS SHALL BE 3/4" DIA., A325 BEARING-TYPE WITH THREADS INCLUDED IN THE SHEAR PLANE. UNO, INSTALL BOLTS IN PROPERLY ALIGNED HOLES AND TIGHTEN USING ONE OF THE FOLLOWING METHODS: SNUG-TIGHT CONDITION, TURN-OF-THE-NUT METHOD, A DIRECT TENSION INDICATOR, OR CALIBRATED WRENCH AS DEFINED BY THE LATEST EDITION OF AISC "SPECIFICATION FOR STRUCTURAL JOINTS USING ASTM A325 OR A490 BOLTS".

17.08 SHEAR CONNECTORS SHALL BE 3/4" DIAMETER BY THE TOTAL FLOOR THICKNESS MINUS 1" IN LENGTH, HEADED STUDS PER AISC SPECIFICATION, LATEST EDITION. THE SPECIFIED LENGTH IS THE NET STUD LENGTH AFTER INSTALLATION. STUDS SHALL BE FIELD WELDED TO THE TOP FLANGE OF THE BEAMS THROUGH THE STEEL DECK UNITS USING AUTOMATICALLY TIMED STUD ARC WELDING EQUIPMENT. OTHER WELDING PROCESSES MUST BE APPROVED BY THE STRUCTURAL ENGINEER OF RECORD PRIOR TO INSTALLATION.

17.09 STRUCTURAL STEEL IN EXTERIOR LOCATIONS SHALL BE GALVANIZED, UNO. SEE ARCH FOR FINAL FINISH OR FIRE PROOFING AT INTERIOR LOCATIONS OR AS NOTED ON THE DRAWINGS.

18.00 POST-INSTALLED ANCHORS

18.01 UNLESS OTHERWISE INDICATED ON PLANS, POST-INSTALLED ANCHORS SHALL CONSIST OF THE FOLLOWING ANCHOR TYPES, OR ENGINEER'S APPROVED EQUAL:

SUBSTRATE	ADHESIVE ANCHOR	MECHANICAL ANCHOR
SOLID CONCRETE	HILTI RE 500 SD V3	HILTI KWIK BOLT TZ
	HILTI HY 200 SAFE SET SYSTEM	HILTI KH-EZ SCREW ANCHOR
	SIMPSON SET-XP	SIMPSON STRONG-BOLT

18.02 SUBSTITUTION REQUESTS FOR ALTERN

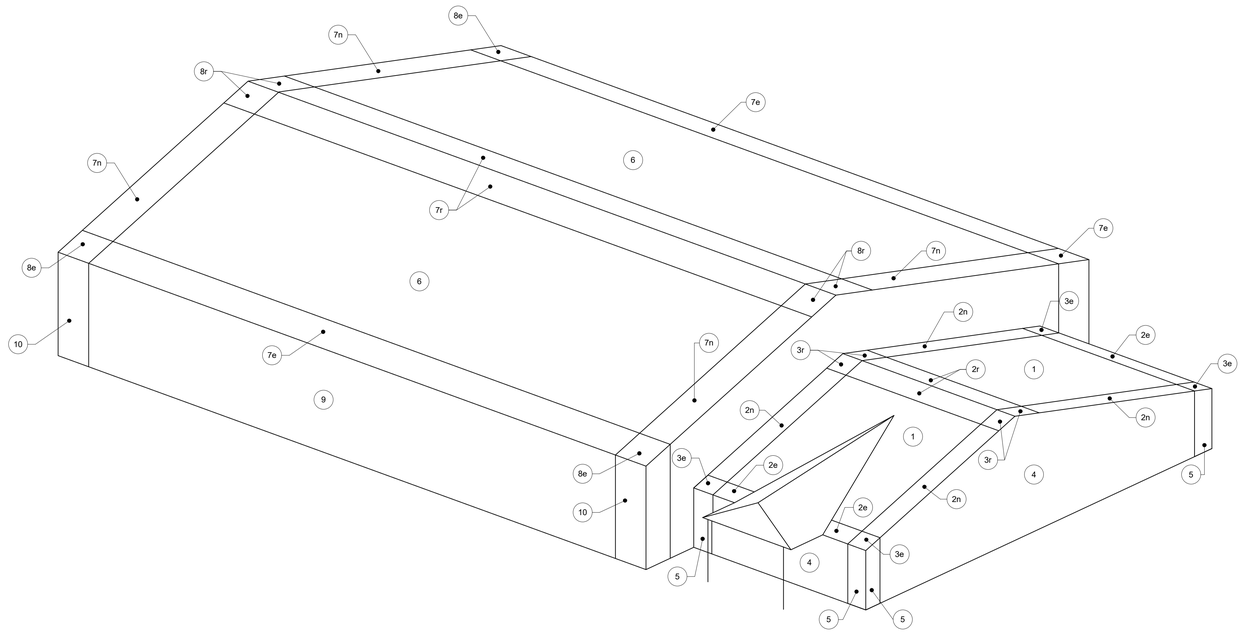

2 S1.02 WIND COMPONENTS AND CLADDING DIAGRAM

NTS

COMPONENTS AND CLADDING DESIGN WIND PRESSURES									
ZONE		AREA ≤ 20 SF		50 SF		200 SF		AREA > 500 SF	
MARK	WIDTH	PRESSURE (PSF)	SUCTION (PSF)	PRESSURE (PSF)	SUCTION (PSF)	PRESSURE (PSF)	SUCTION (PSF)	PRESSURE (PSF)	SUCTION (PSF)
1	-	21.1	-53.0	19.1	-35.2	17.7	-21.8	17.7	-21.8
2e	-	21.1	-53.0	19.1	-35.2	17.7	-21.8	17.7	-21.8
2n	-	21.1	-64.8	19.1	-53.0	17.7	-35.1	17.7	-32.2
2r	-	21.1	-64.8	19.1	-53.0	17.7	-35.1	17.7	-32.2
3e	3'-4"	21.1	-64.8	19.1	-53.0	17.7	-35.1	17.7	-32.2
3r	3'-4"	21.1	-75.0	19.1	-60.1	17.7	-48.8	17.7	-48.8
4	-	31.1	-33.2	29.6	-31.7	27.4	-29.5	26.0	-28.1
5	3'-4"	31.1	-35.4	29.6	-35.4	27.4	-31.0	26.0	-28.1
6	-	22.8	-57.4	20.7	-38.2	19.1	-23.6	19.1	-23.6
7e	-	22.8	-57.4	20.7	-38.2	19.1	-23.6	19.1	-23.6
7n	-	22.8	-70.2	20.7	-57.4	19.1	-38.0	19.1	-34.9
7r	-	22.8	-70.2	20.7	-57.4	19.1	-38.0	19.1	-34.9
8e	8'-8"	22.8	-70.2	20.7	-57.4	19.1	-38.0	19.1	-34.9
8r	8'-8"	22.8	-81.2	20.7	-65.1	19.1	-52.9	19.1	-52.9
9	-	33.7	-35.9	32.1	-34.3	29.7	-32.0	28.1	-30.4
10	8'-8"	33.7	-41.5	32.1	-38.3	29.7	-33.5	28.1	-30.4

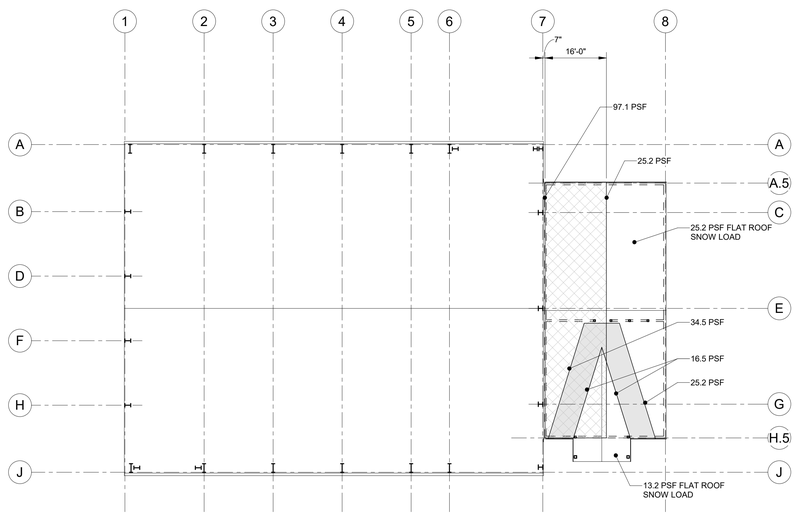

1. S1.02 SNOW DRIFT PLAN

NTS

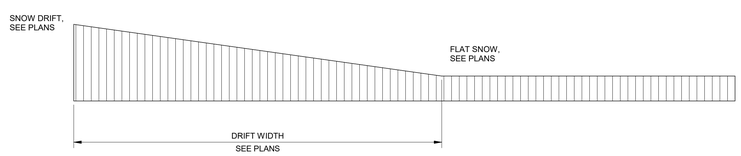

tsk
314 South Water Street,
Suite 100
Henderson, NV 89015
phone: 702.456.3000
fax: 702.898.6209
www.tska.com

THESE DRAWINGS AND SPECIFICATIONS ARE THE PROPERTY OF TATE SNYDER KIMSEY ARCHITECTS AND MAY NOT BE REPRODUCED OR USED FOR ANY PURPOSE WITHOUT THE ARCHITECTS WRITTEN CONSENT. AS INSTRUMENTS OF SERVICE, THESE DOCUMENTS ARE NOT FINAL AND READY FOR USE, AND THEREFORE NOT VALID, UNLESS THEY ARE SEALED, SIGNED AND DATED.

Consultant

Kimley»Horn

PLEASE RECYCLE

Project

WEST WENDOVER NEW FS #13

ANYWHERE BUT HERE

Job No: 092767002

Owner

CITY OF WEST WENDOVER

NOT FOR CONSTRUCTION

Project Status

REVISIONS		
REV	DATE	DESCRIPTION

Sheet Title

DESIGN LOADS

Date: Issue Date

Sheet No:

S1.02

BIM 360://WEST WENDOVER FIRE STATION/092767002 - WEST WENDOVER FS_STR_R21.rvt

ABBREVIATIONS

A/E	ARCHITECT/ENGINEER
AB	ANCHOR BOLT
ABC	AGGREGATE BASE COURSE
ACC	ACCESSIBLE
ADDL	ADDITIONAL
ADDM	ADDENDUM
ADJ	ADJACENT
AFF	ABOVE FINISHED FLOOR
AFG	ABOVE FINISHED GRADE
AFS	ABOVE FINISHED SLAB
AGGR	AGGREGATE
ALLOW	ALLOWANCE
ALT	ALTERNATE
APPROX	APPROXIMATE
ARCH	ARCHITECT, ARCHITECTURAL
BC	BACK OF CURB
BF	BOTH FACES
BLDG	BUILDING
BM	BEAM; BENCHMARK
BOT	BOTTOM
BTWN	BETWEEN
BW	BOTH WAYS
C&G	CURB AND GUTTER
CANTIL	CANTILEVER
CCW	COUNTERCLOCKWISE
CD	CONSTRUCTION DOCUMENTS
CEM	CEMENT
CGS	CENTER OF GRAVITY OF STRAND
CIP	CAST-IN-PLACE
CJ	CONSTRUCTION JOINT
CL	CENTERLINE
CLG	CEILING
CLL	COLUMN LINE
CLR	CLEAR
CMU	CONCRETE MASONRY UNIT
COL	COLUMN
CONC	CONCRETE
CONN	CONNECTION
CONSTR	CONSTRUCTION
CONT	CONTINUE; CONTINUOUS
COORD	COORDINATE
COV	COVER
CTC	CENTER TO CENTER
CTR	CENTER
CTRL JT	CONTROL JOINT
CW	CLOCKWISE
D	DEPTH
D-B	DESIGN-BUILD
DEFL	DEFLECTION
DEG	DEGREE
DEL	DELETE
DEMO	DEMOLITION
DET	DETAIL
DIA	DIAMETER
DIAG	DIAGONAL
DIM	DIMENSION
DIR	DIRECTION
DIST	DISTANCE
DL	DEAD LOAD
DR	DRAIN; DRIVE
DSGN	DESIGN
DWG	DRAWING
DWL	DOWEL(S)
E	EAST
EA	EACH
EC	EDGE OF CURB
EE	EACH END
EF	EACH FACE
EJ	EXPANSION JOINT
EL	EACH LAYER; ELEVATION
ELEV	ELEVATOR
EMBED	EMBEDMENT
ENGR	ENGINEER
ENTR	ENTRANCE
EOR	ENGINEER OF RECORD
EOS	EDGE OF SLAB
EQ	EQUAL
EQL SP	EQUALLY SPACED
EQUIP	EQUIPMENT
ESP	EXPANSION; EXPOSED
EST	ESTIMATE
EW	EACH WAY
EX / EXIST	EXISTING
EXP BT	EXPANSION BOLT
EXP JT	EXPANSION JOINT
EXST GR	EXISTING GRADE
EXT	EXTERIOR
EXTN	EXTENSION
FD	FLOOR DRAIN
FDTN	FOUNDATION
FF	FINISH FACE
FF EL	FINISH FLOOR ELEVATION
FIN	FINISH
FIN FLR	FINISH FLOOR
FIN GR	FINISH GRADE
FLR	FLOOR
FOC	FACE OF CONCRETE
FOM	FACE OF MASONRY
FOW	FACE OF WALL
FR	FRAME
FRMG	FRAMING
FT	FEET; FOOT
FTF	FACE TO FACE
FTG	FOOTING
FWRK	FORMWORK
G	GIRDER; GROUND
GA	GAGE
GALV	GALVANIZED
GC	GENERAL CONTRACTOR
GEN	GENERAL
GL	GROUND LEVEL
GR BM	GRADE BEAM
GR FL	GROUND FLOOR
HDG	HOT-DIP GALVANIZING
HK	HOOK
HORIZ	HORIZONTAL
HS	HEADED STUD
HT	HEIGHT
ID	INSIDE DIAMETER (DIMENSION)
IF	INSIDE FACE
IN	INCH
INFO	INFORMATION
INSTL	INSTALL
INT	INTERIOR
ISO JT	ISOLATION JOINT
JST	JOIST
JT	JOINT
KIP	THOUSAND POUNDS
KLF	KIPS PER LINEAR FOOT
KSF	KIPS PER SQUARE FOOT
KSI	KIPS PER SQUARE INCH
KWY	KEYWAY
L	ANGLE
LBS	POUNDS
LD	LONG DIRECTION
LF	LINEAR FEET (FOOT)
LL	LIVE LOAD
LLH	LONG LEG HORIZONTAL
LLV	LONG LEG VERTICAL
LN	LANE
LTL	LINTEL
M	MOMENT
MAS	MASONRY
MATL	MATERIAL
MAX	MAXIMUM
MBR	MEMBER
MEAS	MEASURE
MECH	MECHANICAL
MFR	MANUFACTURER
MIN	MINIMUM
MISC	MISCELLANEOUS
MULT	MULTIPLE
N	NORTH
NA	NOT APPLICABLE
NF	NEAR FACE
NIC	NOT IN CONTRACT
NO	NUMBER
NOM	NOMINAL
NORM	NORMAL
NTS	NOT TO SCALE
OC	ON CENTER
OD	OUTSIDE DIAMETER (DIMENSION)
OF	OUTSIDE FACE
OPNG	OPENING
OPP	OPPOSITE
OTO	OUT TO OUT
PAR	PARALLEL
PCC	PRECAST CONCRETE
PCF	POUNDS PER CUBIC FOOT
PEMB	PRE-ENGINEERED METAL BUILDING
PERP	PERPENDICULAR
PL	PLATE; PROPERTY LINE
PRCST	PRECAST
PRELIM	PRELIMINARY
PRKG	PARKING
PROJ	PROJECT
PROP	PROPERTY
PS CONC	PRESTRESSED CONCRETE
PSF	POUNDS PER SQUARE FOOT
PSI	POUNDS PER SQUARE INCH
PT	POST TENSIONED
PT CONC	POST TENSIONED CONCRETE
QTR	QUARTER
R	RADIUS
RC	REINFORCED CONCRETE
RCB	REINFORCED CONCRETE BOX
RCP	REINFORCED CONCRETE PIPE
RD	ROOF DRAIN
REBAR	REINFORCING STEEL BAR
REF	REFERENCE
REINF	REINFORCEMENT
REP	REPAIR
REPL	REPLACE
REQD	REQUIRED
REV	REVISION
RFI	REQUEST FOR INFORMATION
RFP	REQUEST FOR PROPOSAL
RT/W	RETAINING WALL
S	SOUTH
SCHED	SCHEDULE
SD	SHOP DRAWINGS; SCHEMATIC DESIGN; SHORT DIRECTION
SEC	SECTION
SIM	SIMILAR
SL	SNOW LOAD
SOG	SLAB-ON-GRADE
SP EL	SPOT ELEVATION
SPA	SPACES
SPEC	SPECIFICATION
SQ	SQUARE
STD	STANDARD
STL	STEEL
STL JST	STEEL JOIST
STOR	STORAGE
STRUCT	STRUCTURAL
T&B	TOP AND BOTTOM
TB	THROUGH BOLT
TE	TOP ELEVATION
TEMP	TEMPERATURE; TEMPORARY
TFF	TOP OF FINISH FLOOR
THK	THICKNESS
THRU	THROUGH
TO	TOP OF ___
TO FDN	TOP OF FOUNDATION
TOB	TOP OF BEAM
TOC	TOP OF CONCRETE (CURB)
TOC FTG	TOP OF CONCRETE FOOTING
TOC WALL	TOP OF CONCRETE WALL
TOF	TOP OF FLOOR (FOOTING)
TOM	TOP OF MASONRY
TOS	TOP OF SLAB
TOW	TOP OF WALL
TYP	TYPICAL
UNIF	UNIFORM
UNO	UNLESS NOTED OTHERWISE
V	SHEAR
VAR	VARIES
VEH	VEHICLE
VERT	VERTICAL
VIF	VERIFY IN FIELD
W	WEST
W/	WITH
W/O	WITHOUT
W/W	WALL TO WALL
WF	WIDE FLANGE
WL	WIND LOAD
WP	WATERPROOFING
WWF	WELDED WIRE FABRIC

SPREAD FOOTING SCHEDULE

MARK	LENGTH	WIDTH	THICKNESS	BOT REINF	TOP REINF	COMMENTS
F3.0	3'-0"	3'-0"	1'-0"	(4) #4 EW	(4) #4 EW	
F5.0	5'-0"	5'-0"	1'-0"	(5) #5 EW	(5) #5 EW	
F7.0	7'-0"	7'-0"	1'-0"	(6) #5 EW	(6) #5 EW	

CONCRETE PEDESTAL SCHEDULE

MARK	SIZE (WxL)	VERT REINF	TIES	COMMENTS
P1	1'-0"X1'-0"	(8) #4	#3 AT 6" OC	
P2	2'-3"X2'-3"	(16) #6	#4 AT 12" OC	
P3	3'-0"X3'-0"	(20) #8	#4 AT 12" OC	PLACE VERTICAL REINFORCEMENT A.S. IN 6/S5.01 WITH (4)-#5 SHEAR REINF. A.S.
P5.25	5'-3"X5'-3"			PLACE REINFORCEMENT AS DETAILED FOR P2 AND P3 UNDER THE CORRESPONDING COLUMNS

BASE PLATE SCHEDULE

MARK	BASE PL	ANCHOR RODS	COMMENTS
BP1	-	HEAVY HEX HEAD, F1554 GR 55, 5/8" DIA x 10" EFF	BASEPLATE DIMENSIONS AND EDGE DISTANCES WERE PROVIDED BY THE PEMB SUPPLIER AND ARE NOTED AS THE BASIS OF DESIGN FOR THE ANCHOR SIZE AND EMBEDMENT DEPTH. CONTRACTOR TO CONFIRM BASE PLATE SIZE AND LAYOUT WITH THE PEMB SUPPLIER PRIOR TO INSTALLING ANCHORS.
BP2	-	HEAVY HEX HEAD, F1554 GR 55, 7/8" DIA x 10" EFF	
BP3	-	-	

STRIP FOOTING SCHEDULE

MARK	WIDTH	THICKNESS	BOT REINF	TOP REINF	COMMENTS
SF2.5	2'-6"	1'-0"	#4 @ 9" OC	#4 @ 9" OC	
SF3.75	4'-5"	1'-0"	#4 @ 9" OC	#4 @ 9" OC	

ROOF TRUSS SCHEDULE RTX

	TRUSS TYPE	TRUSS PROFILE
MARK	DESCRIPTION	DESCRIPTION
RT1	HIP TRUSS	3 POINT BEARING
RT2	HIP TRUSS	2 POINT BEARING

NOTES:

1. TRUSS MANUFACTURER TO COORDINATE WITH MECHANICAL, PLUMBING AND ARCHITECTURAL DRAWINGS ABOVE GUESS ROOM AREAS FOR MECHANICAL DUCTS, PIPES, ETC., AND DESIGN TRUSS TO SUPPORT ADDITIONAL LOAD WHERE REQUIRED.
2. TRUSS MANUFACTURER TO REDUCE SPACING AS REQUIRED.
3. PROVIDE DOUBLE TRUSSES UNDER MECHANICAL ROOF ROP UNIT AS NEEDED.
4. ALL GIRDER TRUSSES TO BE DESIGNED FOR AN AXIAL WIND/SEISMIC FORCE OF 4000# MIN (ASD).
5. TRUSS MANUFACTURER TO COORDINATE WITH MECHANICAL AND ARCHITECTURAL DRAWINGS TO LOCATE AND PROVIDE REQUIRED OPENING BETWEEN CHORDS FOR DUCT WORKS THROUGH TRUSSES WHERE NEEDED..
6. TRUSS MANUFACTURER TO COORDINATE WITH ARCHITECTURAL DRAWINGS FOR EXACT DEPTH OF TRUSS.

HOLD-DOWN SCHEDULE

HOLDOWN NOTES:

A. HOLDOWN INSTALLATION PER TYPICAL DETAILS.
B. AT CONTRACTOR'S OPTION - SIMPSON ATS HOLDOWN SYSTEM MAY BE USED IN LIEU OF HOLDOWNS SHOWN PROVIDED ENGINEERED DRAWINGS AND CALCULATIONS ARE SUBMITTED AND APPROVED BY ENGINEER OF RECORD (EOR).

MARK	SIMPSON HOLDOWN/ STRAP	SIMPSON ANCHOR			POST SIZE U.N.O.		POST ATTACHMENT	REMARKS
		DIA	MODEL	EMBED "le"	6" WALL	4" WALL		
1	HDU5-SDS2.5	5/8"	SB5/8X 24	18"	(3) 2x6 MIN	4x6 MIN	(14) SDS 1/4" X 2 1/2"	NOTES 2 AND 3
2	HDU8-SDS2.5	7/8"	SSTB28	24 7/8"	(3) 2x6 MIN	4x8 MIN	(20) SDS 1/4" X 2 1/2"	NOTES 2 AND 3

NOTES:

1. ALLOW BUILDING TO SHRINK PRIOR TO INSTALLING BOTH ENDS OF THE STRAPS TO MINIMIZE POTENTIAL FOR STRAP BUCKLING. SIMPSON HDU5 MAY BE USED IN LIEU OF HOLDOWN STRAPS 1 TO 3.
2. WHEN HOLDOWN ANCHOR IS CONNECTED TO ELEVATED CONCRETE SLAB, USE SIMPSON SAR TYPE ANCHOR WITH SAME DIAMETER. ANCHOR EMBEDMENT DEPTH AND INSTALLATION PER TYPICAL DETAILS.
3. WHEN HOLDOWN IS CONNECTED TO INTERIOR SLAB ON GRADE USE SIMPSON PAB5 AT 5/8" DIA ANCHORS AND PAB7 AT 7/8" DIA WITH 6 1/2" AND 8 1/2" EMBEDMENT RESPECTIVELY.

TYPICAL HEADER SCHEDULE

HEADERS AND WINDOW SILLS

OPENING WIDTH	BEARING WALLS MINIMUM HEADER SIZE		NON-BEARING WALLS MINIMUM HEADER SIZE	SILL PLATES AT WINDOWS		FACE NAILS AT HEADER AND WINDOW SILL
	6" WALL	4" WALL	6" AND 4" WALLS	6" WALL	4" WALL	
0'-0" - 3'-6"	(3) 2x6	4x8	(1) 2x HORIZONTAL	2x6	2x4	(3) 16d
3'-6" - 5'-0"	(3) 2x10	4x10	(1) 2x6 VERTICAL (1) 2x HORIZONTAL	2x6	(2) 2x4	(3) 16d
5'-1" - 6'-0"	(3) 2x10	4x10	(1) 2x8 VERTICAL (1) 2x HORIZONTAL	2x6	(2) 2x4	(4) 16d
6'-1" - 7'-0"	(3) 2x12	4x12	(1) 2x8 VERTICAL (1) 2x HORIZONTAL	2x6	(2) 2x4	(6) 16d
7'-1" - 8'-0"	(3) 2x12	3 1/8X12 GLB	(1) 2x8 VERTICAL (2) 2x HORIZONTAL	(2) 2x6	(2) 2x4	(8) 16d
8'-1" - 9'-0"	6x14	3 1/8X12 GLB	(1) 2x8 VERTICAL (2) 2x HORIZONTAL	(2) 2x6	(3) 2x4	(8) 16d

KING AND TRIMMER STUDS

	MAXIMUM OPENING WIDTH	KING STUDS		TRIMMER STUDS	
		6" WALL	4" WALL	6" WALL	4" WALL
AT 1ST FLOOR WALLS	4'-0"	2x6	2x4	2x6	2x4
	5'-0"	2x6	2x4	2x6	(2) 2x4
	6'-0"	2x6	2x4	2x6	(2) 2x4
	7'-0"	2x6	(2) 2x4	2x6	(2) 2x4
	8'-0"	(2) 2x6	(2) 2x4	2x6	(2) 2x4
	9'-0"	(2) 2x6	(2) 2x4	(2) 2x6	(2) 2x4

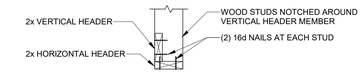

TYPICAL "L" SHAPED HEADER AT NON-BEARING WALLS

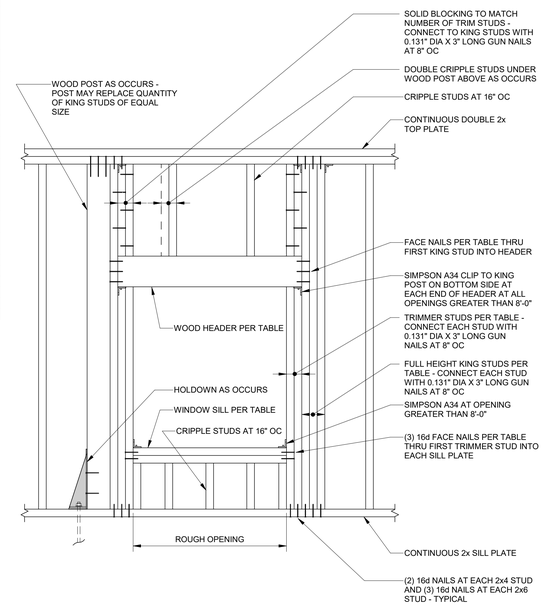

WOOD SHEAR WALL (SW) SCHEDULE

GENERAL (SW) NOTES:

A. SHEAR WALL CONFIGURATION AND CONSTRUCTION INFORMATION PER TYPICAL SHEAR WALL ELEVATIONS, AND
B. PROVIDE (2) STUDS MINIMUM AT EACH END OF SHEAR WALL U.N.O. END STUDS SHALL RECEIVE EDGE NAILING.
C. ALL BLOCKING IN WALLS SHALL MEET OR EXCEED STUD GRADE.
D. PANEL JOINTS SHALL OCCUR AT CENTERLINE OF STUDS OR BLOCKING.
E. VERIFY WITH ARCHITECT IF ADDITIONAL LAYERS OF GYP BOARD ARE REQUIRED FOR FINISHES.
F. CONTRACTOR'S OPTION - PROVIDE CLIPS AT TOP AND SILL PLATES BY ALTERNATE MANUFACTURER THAT MEET OR EXCEED CAPACITY OF CLIPS INDICATED IN SCHEDULE.
G. HOLDOWN INFORMATION PER HOLDOWN SCHEDULE.
H. PROVIDE NAILING AT CLIP ANGLES PER MANUFACTURER'S RECOMMENDATIONS.
I. TOP AND SILL PLATE NAILING SHALL BE STAGGERED WHERE NAILS ARE SPACED AT 2" OC.
J. FASTENER SPACING AT INTERIOR SUPPORTS SHALL BE 12" O.C. UNLESS NOTED OTHERWISE.
K. PROVIDE PLATE WASHERS AT SILL PLATE ANCHORS PER TYPICAL DETAIL
L. WOOD STUDS IN A SHEARWALL SHALL NOT BE SPACED MORE THAN 16" OC.

MARK	WALL PANEL CONSTRUCTION	WALL PANEL FASTENING			TOP AND SILL PLATE FASTENING			ALLOWABLE SHEAR (PLF)	
		EDGE SPACING	MINIMUM FASTENER SIZE	PER NOTES	JOIST/TRUSS OR BLOCKING TO TOP PLATE (a)	SILL PLATE TO WOOD FRAMING (b)	SILL PLATE TO CONCRETE (10)	WIND	SEISMIC
					SIMPSON CLIP	COMMON OR BOX NAILS			
SW1	(1) LAYER 3/8" OSB OR PLYWOOD (1) SIDE OF WALL - BLOCKED	6"	10d COMMON OR GALVANIZED BOX NAIL	7 AND 9	A35 OR LTP4 AT 16" OC	16d AT 16" OC OR 12d AT 4" OC	5/8" DIA ANCHORS AT 32" OC	365	260
SW2	(1) LAYER 3/8" OSB OR PLYWOOD (1) SIDE OF WALL - BLOCKED	4"	10d COMMON OR GALVANIZED BOX NAIL	7 AND 9	A35 OR LTP4 AT 12" OC	16d AT 3" OC OR 12d AT 2" OC	5/8" DIA ANCHORS AT 24" OC	645	460

NOTES:

1. FASTENER SPACING AT INTERMEDIATE SUPPORTS SHALL MATCH THE SCHEDULED EDGE SPACING.
2. ALL WALLBOARD NAILS INDICATED IN SCHEDULE SHALL BE 0.120"Ø AND HAVE A MINIMUM 3/8" HEAD.
3. STAPLES SHALL BE GALVANIZED, HAVE 7/16" MINIMUM CROWN WIDTH AND BE INSTALLED PARALLEL TO FRAMING MEMBERS.
4. 6d NAILS MAY BE SUBSTITUTED WITH DRYWALL SCREWS OR NO.6 - 1 1/4" TYPE S OR W SCREWS.
5. PROVIDE EXTERIOR GYP BOARD WHERE SHEAR WALL IS AN EXTERIOR WALL.
6. BLOCK ALL PANEL EDGES WITH WOOD BLOCKING TO MATCH THE STUD WALL SIZE.
7. BLOCK ALL PANEL EDGES WITH WOOD BLOCKING 2" NOMINAL OR WIDER.
8. BLOCK ALL PANEL EDGES WITH WOOD BLOCKING 3" NOMINAL OR WIDER, STAGGER NAILS.
9. PROVIDE 1 1/2" MINIMUM PENETRATION INTO STUD AT 10d NAIL AND 1 3/8" AT 8d NAIL.
10. AT CONTRACTOR'S OPTION, USE 5/8"Ø SIMPSON TITEN HD SCREW ANCHORS WITH MINIMUM 3" EMBEDMENT WITH SAME SPACING. DO NOT DAMAGE REINFORCING WHEN DRILLING.

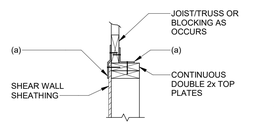

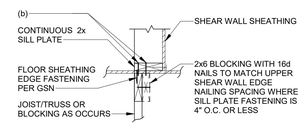

tsk
314 South Water Street,
Suite 100
Henderson, NV 89015
phone: 702.456.3000
fax: 702.898.6209
www.tska.com

THESE DRAWINGS AND SPECIFICATIONS ARE THE PROPERTY OF TATE SNYDER KIMSEY ARCHITECTS AND MAY NOT BE REPRODUCED OR USED FOR ANY PURPOSE WITHOUT THE ARCHITECTS WRITTEN CONSENT. AS INSTRUMENTS OF SERVICE, THESE DOCUMENTS ARE NOT FINAL AND READY FOR USE, AND THEREFORE NOT VALID, UNLESS THEY ARE SEALED, SIGNED AND DATED.

Consultant

Kimley»Horn

PLEASE RECYCLE

Project

WEST WENDOVER NEW FS #13

ANYWHERE BUT HERE

Job No: 092767002

Owner

CITY OF WEST WENDOVER

NOT FOR CONSTRUCTION

Project Status

REVISIONS		
REV	DATE	DESCRIPTION

Sheet Title

ABBREVIATIONS AND SCHEDULES

Date: Issue Date

Sheet No:

S1.03

BIM 360://WEST WENDOVER FIRE STATION/092767002 - WEST WENDOVER FS_STR_R21.rvt

NOTES:

1. COMPLY WITH SPECIFICATIONS AND STRUCTURAL GENERAL NOTES. UNLESS OTHERWISE SPECIFIED, THE FOLLOWING NOTES RELATING TO THE FOUNDATION PLAN SHALL GOVERN.
2. REFER TO PLUMBING, MECHANICAL, FIRE PROTECTION, CIVIL, AND ELECTRICAL PLANS FOR LOCATIONS AND SIZES OF OPENING THROUGH CIP CONCRETE, CMU WALLS AND ALL NECESSARY EMBEDDED ITEMS AS REQUIRED.
3. WALL CONSTRUCTION JOINTS SHALL BE LOCATED AT CONTROL JOINT LOCATIONS. SEE DETAILS ON S501.
4. ELEVATION 100'-0" (ARCHITECTURAL DATUM) = 4232.00'.
5. COLUMNS AND FOUNDATIONS SHALL BE CENTERED ON COLUMN GRID LINES (EG. COLUMNS, WALLS, ETC.) UNLESS NOTED OTHERWISE.
6. REFER TO PLUMBING, MECHANICAL, FIRE PROTECTION, CIVIL, ELECTRICAL PLANS AND STRUCTURAL DETAILS FOR LOCATIONS AND SIZES OF OPENINGS THROUGH CIP CONCRETE AND ALL REQUIRED EMBEDDED ITEMS.
7. WHERE SHOWN, BUT NOT SPECIFICALLY NOTED, PROVIDE STANDARD ACI-90 DEGREE OR 180 DEGREE HOOKS, AS APPLICABLE, TO REBAR.
8. PROVIDE CLASS B LAPS FOR ALL REBAR SPLICES RELATING TO FOUNDATION WORK UNLESS NOTED OTHERWISE. SEE LAP SPLICE SCHEDULE.
9. REFER TO CIVIL PLANS FOR PROPERTY LINES.
10. REFER TO CIVIL PLANS FOR SLAB-ON-GRADE TYPICAL DETAILS FOR SLAB-ON-GRADE OUTSIDE OF THE BUILDING FOOTPRINT. REFER TO CIVIL PLANS FOR SLAB-ON-GRADE ELEVATIONS AND GRADES.
11. CONTRACTOR SHALL AVOID CONFLICT WITH FOUNDATIONS OF NEARBY EXISTING AND PROPOSED STRUCTURES AND BURIED UTILITIES.
12. POSITIVE DRAINAGE SHALL BE PROVIDED AROUND THE PERIMETER OF THE PARKING STRUCTURE TO MINIMIZE MOISTURE INFILTRATION INTO THE FOUNDATION SOILS.

LEGEND:

1. (XXX'-X") — NUMBER IN PARENTHESIS DENOTES TOP OF FOOTING. TOF = 97'-0" UNO.
2. CAST-IN-PLACE CONCRETE PEDESTAL
3. CAST-IN-PLACE CONCRETE FOUNDATION WALL
4. DENOTES DRAINAGE SLOPE DIRECTIONS
5. DENOTES FOUNDATION STEP
7. **F3.0** — DENOTES CONCRETE SPREAD FOOTING, TYPE F3.0, REFER TO DETAIL 1/S5.01
8. **P1** — DENOTES CONCRETE PEDESTAL, TYPE 1, REFER TO DETAIL 5/S5.01
9. **SF1** — DENOTES STRIP FOOTING, TYPE SF1, REFER TO DETAIL 2/S5.01

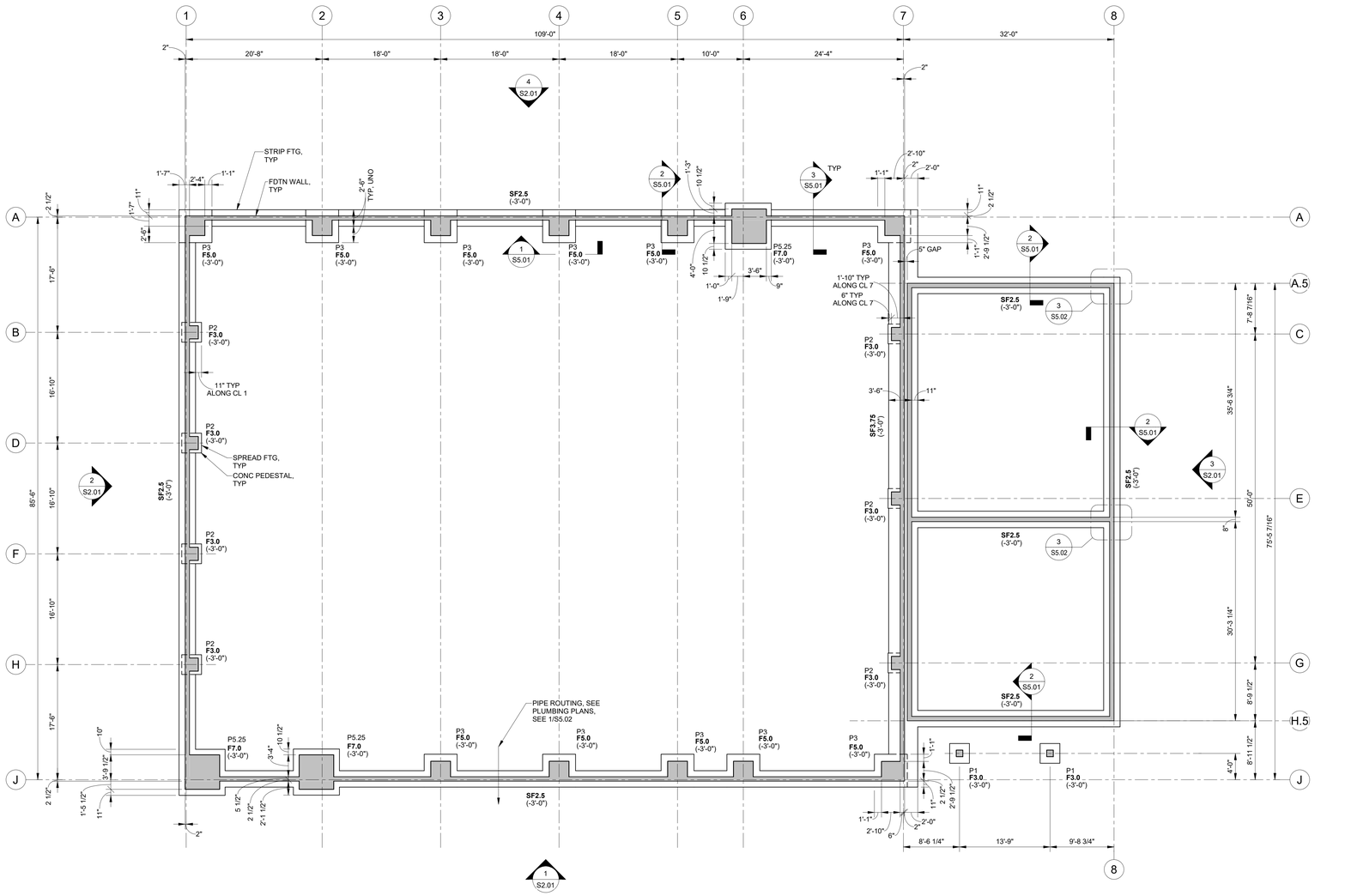

1 S1.10 FOUNDATION PLAN
SCALE: 1/8" = 1'-0"

BIM 360://WEST WENDOVER FIRE STATION/092767002 - WEST WENDOVER FS_STR_R21.rvt

tsk
314 South Water Street,
Suite 100
Henderson, NV 89015
phone: 702.456.3000
fax: 702.898.6209
www.tska.com

THESE DRAWINGS AND SPECIFICATIONS ARE THE PROPERTY OF TATE SNYDER KIMSEY ARCHITECTS AND MAY NOT BE REPRODUCED OR USED FOR ANY PURPOSE WITHOUT THE ARCHITECTS WRITTEN CONSENT. AS INSTRUMENTS OF SERVICE, THESE DOCUMENTS ARE NOT FINAL AND READY FOR USE, AND THEREFORE NOT VALID, UNLESS THEY ARE SEALED, SIGNED AND DATED.

Consultant

Kimley»Horn

PLEASE RECYCLE

Project
WEST WENDOVER NEW FS #13

ANYWHERE BUT HERE

Job No: 092767002

Owner
CITY OF WEST WENDOVER

NOT FOR CONSTRUCTION

Project Status

REVISIONS		
REV	DATE	DESCRIPTION

Sheet Title
FOUNDATION PLAN

Date: Issue Date

Sheet No:
S1.10

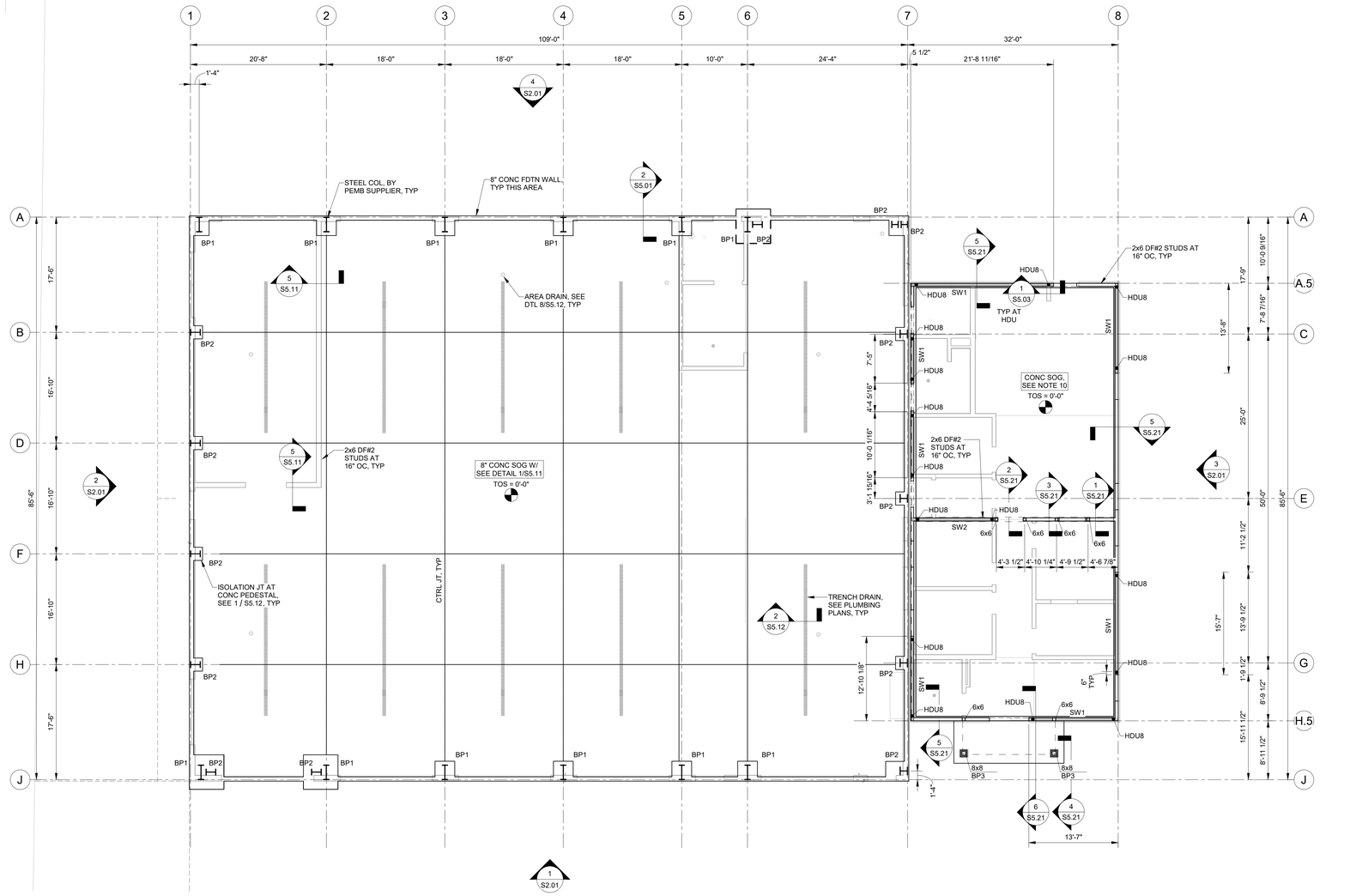

1 S1.11 SLAB-ON-GRADE PLAN
SCALE: 1/8" = 1'-0"

NOTES:

1. COMPLY WITH SPECIFICATIONS AND THE GENERAL NOTES ON SHEET S1.01 AND S1.02. UNLESS NOTED OTHERWISE, THE FOLLOWING NOTES RELATING TO THIS SHEET SHALL GOVERN.
2. ELEVATIONS NOTED THUS (XXX.XX') ARE TOP OF CONCRETE SLAB ON GRADE, TYPICAL. ELEVATIONS ARE INTENDED TO BE APPLIED AT FACE OF COLUMN OR WALL AT GRID LINES, UNLESS NOTED OTHERWISE, AND THE NOTED SLAB-ON-GRADE ELEVATION DOES NOT INCLUDE WASH OR CURB. USE LINEAR INTERPOLATION BETWEEN NOTED ELEVATIONS.
3. BOLLARDS NOT SHOWN ON STRUCTURAL PLANS. SEE ARCHITECTURAL AND STRIPING PLANS FOR BOLLARDS REQUIRED AROUND THE PERIMETER, NEAR THE ENTRY/EXIT LANES AND OTHER LOCATIONS WITHIN THE BUILDING. REFER TO SHEET S511 FOR BOLLARD ATTACHEMENT DETAILS.
4. CONSTRUCTION PROCEDURE FOR THE SLAB-ON-GRADE SHALL BE BASED ON LINE STRIP CONSTRUCTION METHOD. SLAB SHALL BE PLACED WITH CONSTRUCTION JOINTS AS SHOWN. ANY DEVIATIONS SHALL BE SUBJECT TO ENGINEERS APPROVAL. ALL CONTROL JOINTS SHALL BE SAWED IN ACCORDANCE WITH THE SPECIFIC LOCATIONS SHOWN.
5. CONCRETE CURBS AND RAISED ISLANDS ARE NOT SHOWN ON SLAB-ON-GRADE PLANS FOR CLARITY. REFER TO STRIPING AND SIGNING PLANS FOR LOCATIONS.
6. REFER TO PLUMBING PLANS FOR EXACT LOCATION OF FLOOR DRAINS.
7. CONTRACTOR SHALL NOTIFY ENGINEER IF DISCREPANCIES IN DRAINAGE INTENT ARE NOTICED.
8. REFER TO CIVIL, PLUMBING, MECHANICAL, FIRE PROTECTION, AND ELECTRICAL PLANS FOR LOCATIONS AND SIZES OF OPENINGS THROUGH CIP CONCRETE AND ALL NECESSARY EMBEDDED ITEMS AS REQUIRED.
9. REFER TO ARCH PLANS FOR FLOOR FLATNESS REQUIREMENTS IN CONDITIONED ROOMS.
10. 4" SLAB-ON-GRADE WITH 6x6 W2.9xW2.9 WWF OVER VAPOR BARRIER OVER STRUCTURAL FILL PER GEOTECHNICAL REPORT.
11. SEE SHEET S1.04 FOR ABBREVIATIONS AND SCHEDULES.

SHEARWALL NOTES:

1. ORIENTED STRAND BOARD (OSB) PANEL PER GSN MAY BE USED IN LIEU OF PLYWOOD. USE SAME THICKNESS AND NAILING AS NOTED FOR PLYWOOD PANELS. PANELS SHALL HAVE CURRENT I.C.C. APPROVAL.
2. SHEAR WALL OR SHEAR PANEL SHALL BE 2x AT 16" O.C. MAXIMUM.
3. DRAFTSTOPS OCCUR AT PARTY WALLS OF EVERY UNIT. MATERIAL SHALL BE 3/8" PLYWOOD OR DRYWALL AS PER SHEAR WALL SCHEDULE. FURR DOWNS SHALL BE DRAFTSTOPPED. ALL PENETRATIONS SHALL BE AS PER I.B.C.
4. SHEAR WALL SHEATHING SHALL BE CONTINUOUS TO BASE PLATE AT TUB LOCATIONS AND TO TOP PLATES AT FURRED DOWN CEILINGS.
5. PROVIDE DOUBLE BOTTOM PLATE, STAGGERED EDGE NAILING, AND SPLICE NAILING AT ALL TOP AND BOTTOM PLATES IN WALLS AND SHEAR PANELS WHERE 2- 2x BOTTOM PLATE IS REQUIRED.
6. SHEAR PANELS MAY BE SHEATHED ON THE EXTERIOR OR INTERIOR FACE OF EXTERIOR STUDS OR EITHER FACE OF INTERIOR STUDS AS REQUIRED FOR CONSTRUCTION EASE. COORDINATE WITH OTHER TRADES AS REQUIRED.
7. EDGE NAILING APPLIES TO ALL EDGES AND BOUNDARIES, FIELD NAILING APPLIES TO ALL INTERMEDIATE NAILING.
8. WHERE PANELS ARE APPLIED ON BOTH FACES OF A WALL AND NAIL SPACING IS LESS THAN 6 INCHES O.C. ON EITHER SIDE, PANEL JOINTS SHALL BE OFFSET TO FALL ON DIFFERENT FRAMING MEMBERS OR FRAMING SHALL BE 3 INCH NOMINAL OR THICKER AND NAILS ON EACH SIDE SHALL BE STAGGERED.
9. ANY SHEAR WALL MAY BE REPLACED WITH A SHEAR WALL HAVING A HIGHER ALLOWABLE SHEAR.
10. PROVIDE THE SAME THICKNESS PLYWOOD STRIPS FOR THE ENTIRE LENGTH OF WALL, ABOVE AND BELOW OPENINGS, FOR FLUSH FINISH.
11. PANEL SHEATHING SHALL NOT BE LESS THAN 4'x8', EXCEPT AT BOUNDARIES AND CHANGES IN FRAMING. ALL EDGES OF PANELS SHALL BE SUPPORTED BY AND FASTENED TO FRAMING MEMBERS OR BLOCKING. LOCATE NAILS A MINIMUM OF 3/8" FROM PANEL EDGES.
12. WHERE TIMBERSTRAND BLOCKING OCCURS, USE LSL 1 1/4" WIDE MEMBERS TYPICAL. WHERE BOTTOM PLATE CONNECTION SPACING IS 3" OR LESS, USE 1 3/4" WIDE MEMBERS MINIMUM.

LEGEND:

1. (XXX'-XX") DENOTES TOP OF SLAB ELEVATION (XXX'-XX"), SEE NOTE 1
2. CAST-IN-PLACE CONCRETE COLUMN
3. CAST-IN-PLACE CONCRETE WALL
4. FLOOR DRAIN, REFER TO MEP AND ARCH, REINF PER DETAIL 8/S5.12
5. DENOTES DRAINAGE SLOPE DIRECTIONS
6. BP1 DENOTES BASE PLATE, TYPE BP1. REFER TO DETAIL 1/S5.04
7. SW1 DENOTES SHEAR WALL, TYPE SW1.

tsk
314 South Water Street,
Suite 100
Henderson, NV 89015
phone: 702.456.3000
fax: 702.898.6209
www.tska.com

THESE DRAWINGS AND SPECIFICATIONS ARE THE PROPERTY OF TATE SNYDER KIMSEY ARCHITECTS AND MAY NOT BE REPRODUCED OR USED FOR ANY PURPOSE WITHOUT THE ARCHITECTS WRITTEN CONSENT. AS INSTRUMENTS OF SERVICE, THESE DOCUMENTS ARE NOT FINAL AND READY FOR USE, AND THEREFORE NOT VALID, UNLESS THEY ARE SEALED, SIGNED AND DATED.

Consultant

Kimley»Horn

PLEASE RECYCLE

Project
WEST WENDOVER NEW FS #13

ANYWHERE BUT HERE

Job No: 092767002

Owner
CITY OF WEST WENDOVER

NOT FOR CONSTRUCTION

Project Status

REVISIONS		
REV	DATE	DESCRIPTION

Sheet Title
SLAB-ON-GRADE PLAN

Date: Issue Date
Sheet No:
S1.11

BIM 360://WEST WENDOVER FIRE STATION/092767002 - WEST WENDOVER FS_STR_R21.rvt

NOTES:

1. STRUCTURAL REFERENCE ELEVATIONS ( ) = 0'-0" WHICH IS THE TOP OF FINISHED SLAB ELEVATION FOR LEVEL 1. VERIFY WITH CIVIL DRAWINGS. ALL ELEVATIONS NOTED ON PLANS ARE WITH RESPECT TO REFERENCE DATUM ELEVATIONS INFORMATION UNLESS NOTED OTHERWISE. THE CONTRACTOR SHALL VISIT THE SITE AND BECOME FAMILIAR WITH THE SITE AND LOCAL CONDITIONS.
2. THE ARCHITECT FURNISHES ALL ELEVATIONS AND DIMENSIONS. RESOLVE ANY DISCREPANCY WITH ARCHITECT. NOTIFY EOR THROUGH ARCHITECT OF ANY VARIATIONS FROM DIMENSIONS AND CONDITIONS SHOWN BY THIS DRAWING.
3. ALL OPENINGS THROUGH FLOORS, WALLS OR ROOFS ARE NOT SHOWN ON PLANS. COORDINATE ALL OPENING LOCATIONS WITH ARCHITECTURAL, MECHANICAL, AND ELECTRICAL DRAWINGS. COORDINATE ADDITIONAL FRAMING REQUIREMENTS OR REINFORCING WITH TYPICAL DETAILS.
4. SEE SHEET S1.01 THRU S1.03 FOR GENERAL STRUCTURAL NOTES AND SPECIAL INSPECTION REQUIREMENTS.
5. SEE SHEET S1.04 FOR ABBREVIATIONS AND SCHEDULES.
6. REFER TO SHEETS S_ THRU S_ FOR TYPICAL DETAILS. TYPICAL DETAILS APPLY TO SITUATIONS OCCURING ON THE PROJECT THAT ARE THE SAME OR SIMILAR TO THOSE SPECIFICALLY REFERENCED. TYPICAL DETAILS ARE NOT NOTED AT EACH LOCATION WHICH THEY ARE APPLICABLE.
7. SEE SHEET S1.04 FOR TYPICAL HEADER SCHEDULE. CONTRACTOR SHALL COORDINATE WITH OTHER TRADES FOR EXACT SIZE AND LOCATION REQUIREMENTS.

LEGEND:

1. DENOTES ROOF SLOPE

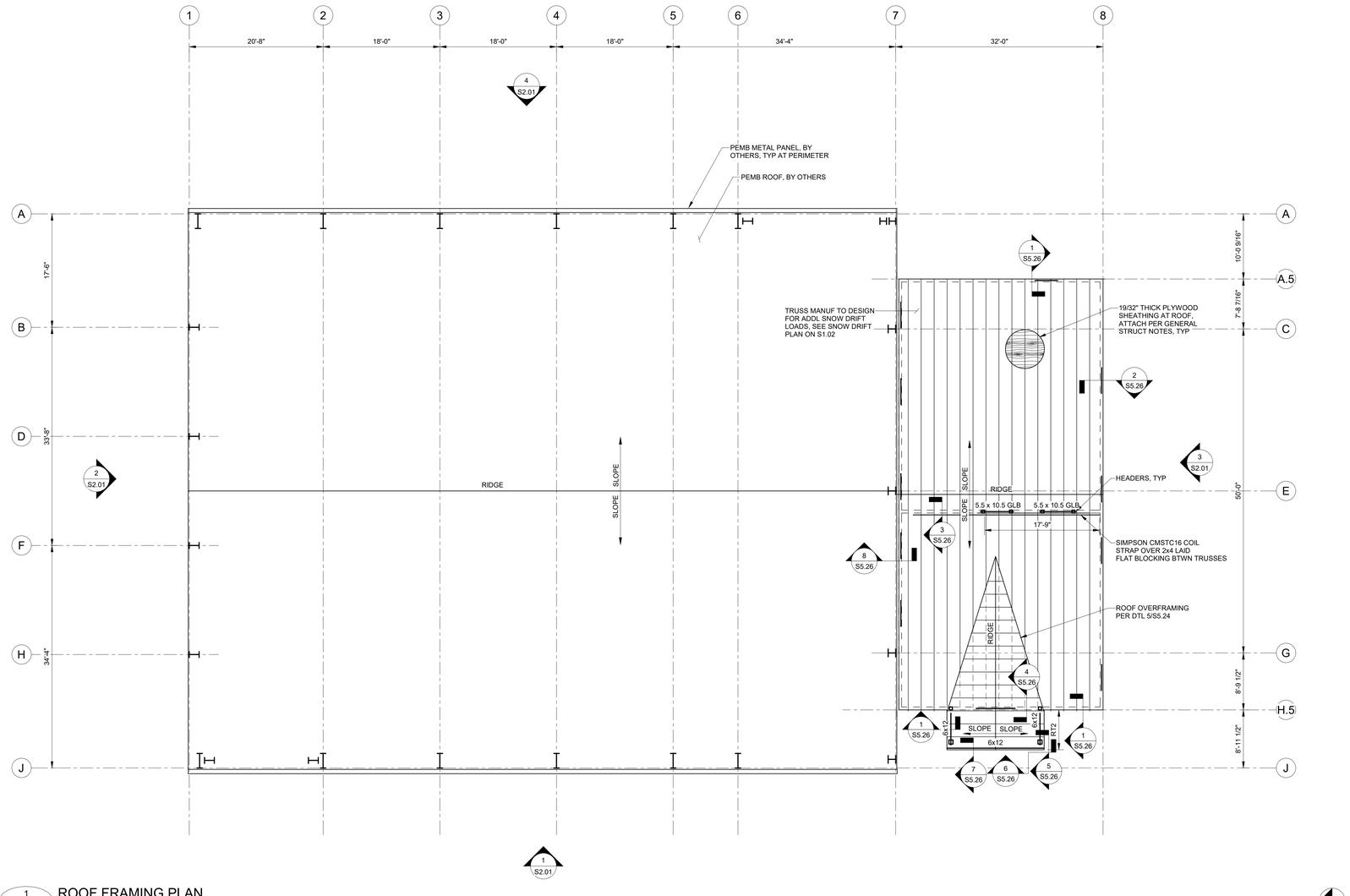

1 S1.20 ROOF FRAMING PLAN
SCALE: 1/8" = 1'-0"

tsk
314 South Water Street,
Suite 100
Henderson, NV 89015
phone: 702.456.3000
fax: 702.898.6209
www.tska.com

THESE DRAWINGS AND SPECIFICATIONS ARE THE PROPERTY OF TATE SNYDER KIMSEY ARCHITECTS AND MAY NOT BE REPRODUCED OR USED FOR ANY PURPOSE WITHOUT THE ARCHITECTS WRITTEN CONSENT. AS INSTRUMENTS OF SERVICE, THESE DOCUMENTS ARE NOT FINAL AND READY FOR USE, AND THEREFORE NOT VALID, UNLESS THEY ARE SEALED, SIGNED AND DATED.

Consultant

Kimley»Horn

PLEASE RECYCLE

Project
WEST WENDOVER NEW FS #13

ANYWHERE BUT HERE

Job No: 092767002

Owner
CITY OF WEST WENDOVER

NOT FOR CONSTRUCTION

Project Status

REVISIONS		
REV	DATE	DESCRIPTION

Sheet Title
ROOF FRAMING PLAN

Date: Issue Date
Sheet No:
S1.20

BIM 360://WEST WENDOVER FIRE STATION/092767002 - WEST WENDOVER FS_STR_R21.rvt

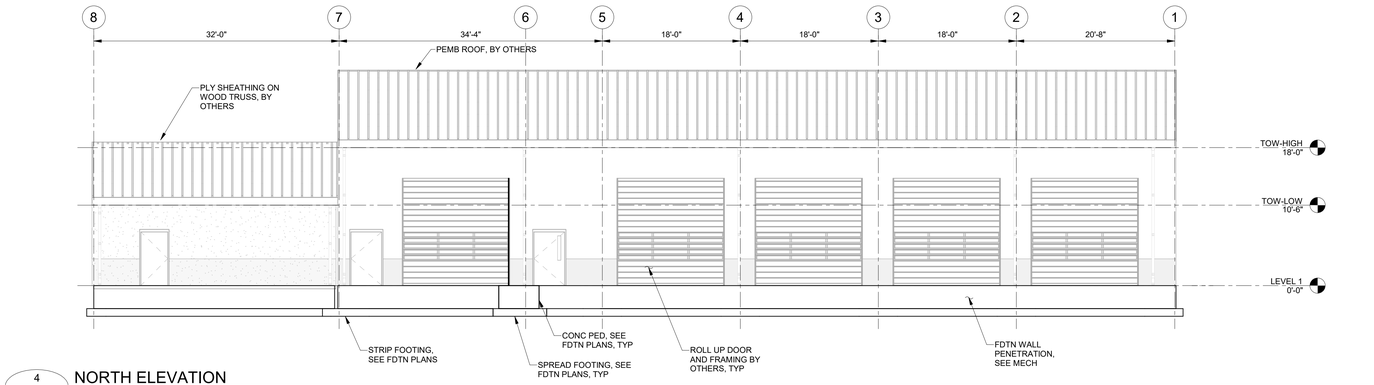

4 S2.01 NORTH ELEVATION
SCALE: 1/8" = 1'-0"

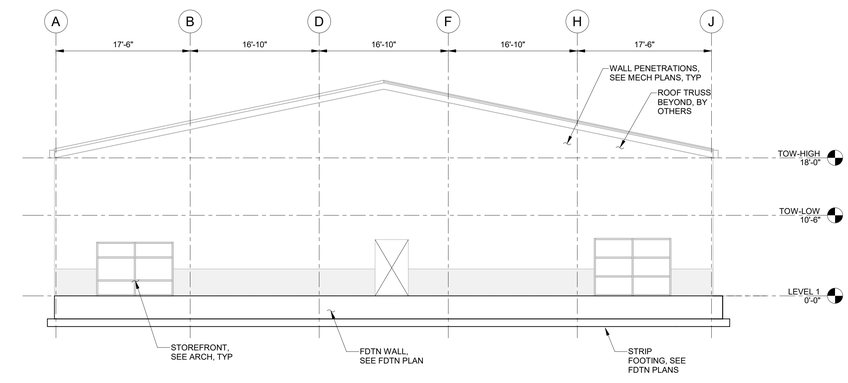

2 S2.01 WEST ELEVATION
SCALE: 1/8" = 1'-0"

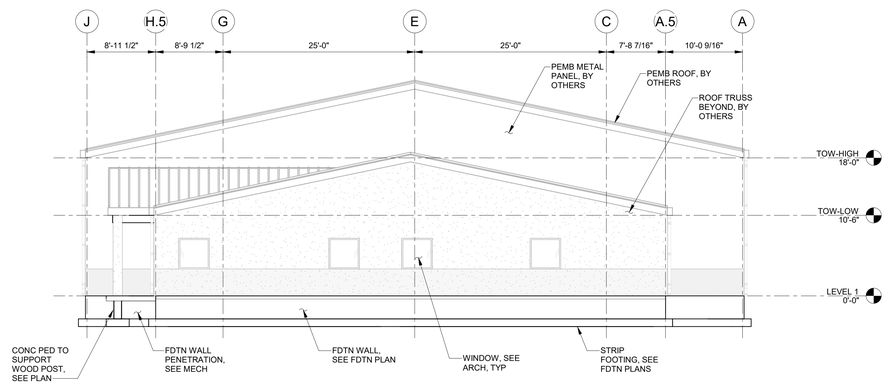

3 S2.01 EAST ELEVATION
SCALE: 1/8" = 1'-0"

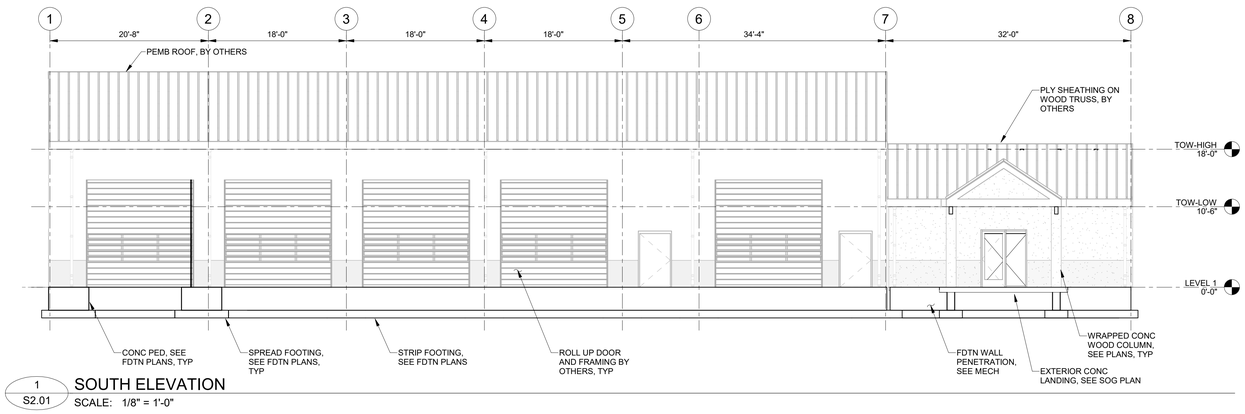

1 S2.01 SOUTH ELEVATION
SCALE: 1/8" = 1'-0"

tsk
314 South Water Street,
Suite 100
Henderson, NV 89015
phone: 702.456.3000
fax: 702.898.6209
www.tska.com

THESE DRAWINGS AND SPECIFICATIONS ARE THE PROPERTY OF TATE SNYDER KIMSEY ARCHITECTS AND MAY NOT BE REPRODUCED OR USED FOR ANY PURPOSE WITHOUT THE ARCHITECTS WRITTEN CONSENT. AS INSTRUMENTS OF SERVICE, THESE DOCUMENTS ARE NOT FINAL AND READY FOR USE, AND THEREFORE NOT VALID, UNLESS THEY ARE SEALED, SIGNED AND DATED.

Consultant

Kimley»Horn

PLEASE RECYCLE

Project
WEST WENDOVER NEW FS #13

ANYWHERE BUT HERE

Job No: 092767002

Owner
CITY OF WEST WENDOVER

NOT FOR CONSTRUCTION

Project Status

REVISIONS		
REV	DATE	DESCRIPTION

Sheet Title
ELEVATIONS

Date: Issue Date
Sheet No:

S2.01

BIM 360://WEST WENDOVER FIRE STATION/092767002 - WEST WENDOVER FS_STR_R21.rvt

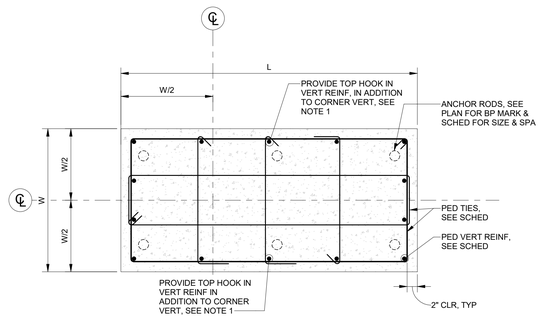

ELONGATED PEDESTAL AT BRACED FRAME GUSSET CONNECTIONS

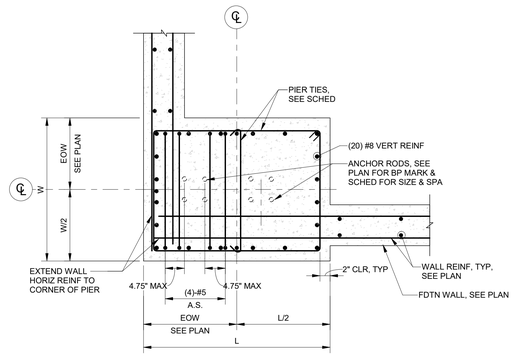

PEDESTAL P5.25

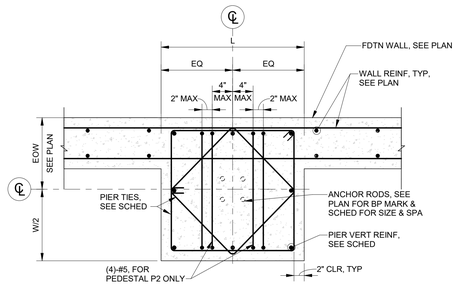

PEDESTAL P2 AND P3

6 S5.01 CONCRETE PEDESTAL DETAILS

SCALE: 1" = 1'-0"

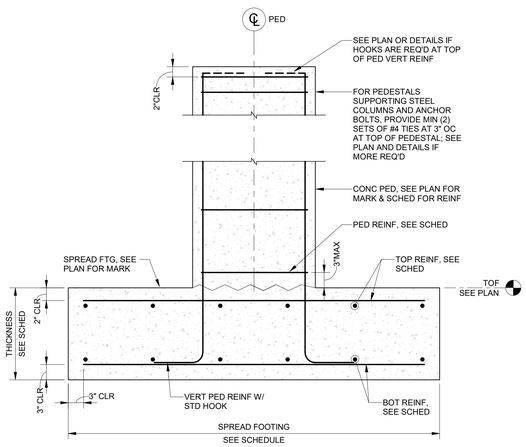

1 S5.01 CONCRETE PEDESTAL ON SPREAD FOOTING

SCALE: 1" = 1'-0"

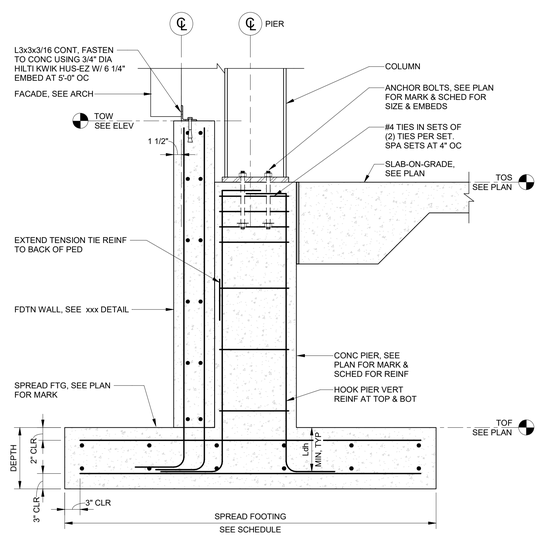

2 S5.01 SECTION THROUGH FOUNDATION AT FRAME COLUMN

SCALE: 1" = 1'-0"

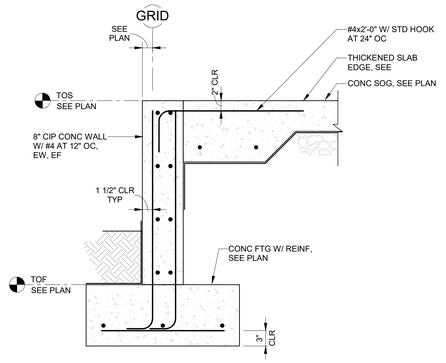

3 S5.01 FOUNDATION WALL DETAIL AT DOOR OPENING

SCALE: 1" = 1'-0"

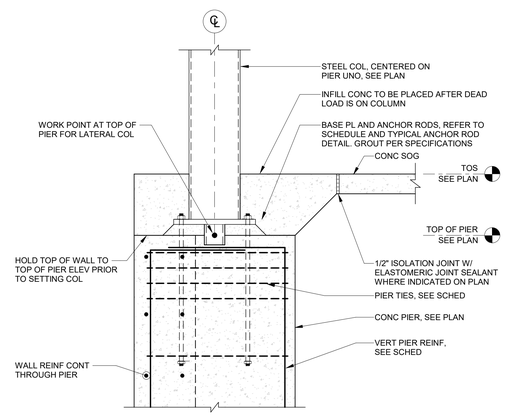

5 S5.01 WALL DETAIL AT COLUMN ON PIER WITH STEM WALL

SCALE: 1" = 1'-0"

tsk
314 South Water Street,
Suite 100
Henderson, NV 89015
phone: 702.456.3000
fax: 702.898.6209
www.tska.com

THESE DRAWINGS AND SPECIFICATIONS ARE THE PROPERTY OF TATE SNYDER KIMSEY ARCHITECTS AND MAY NOT BE REPRODUCED OR USED FOR ANY PURPOSE WITHOUT THE ARCHITECTS WRITTEN CONSENT. AS INSTRUMENTS OF SERVICE, THESE DOCUMENTS ARE NOT FINAL AND READY FOR USE, AND THEREFORE NOT VALID, UNLESS THEY ARE SEALED, SIGNED AND DATED.

Consultant

Kimley»Horn

PLEASE RECYCLE

Project

WEST WENDOVER NEW FS #13

ANYWHERE BUT HERE

Job No: 092767002

Owner

CITY OF WEST WENDOVER

NOT FOR CONSTRUCTION

Project Status

REVISIONS		
REV	DATE	DESCRIPTION

Sheet Title

FOUNDATION DETAILS

Date: Issue Date

Sheet No:

S5.01

BIM 360://WEST WENDOVER FIRE STATION/092767002 - WEST WENDOVER FS_STR_R21.rvt

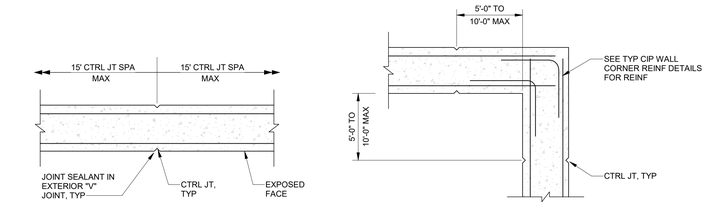

WALL LENGTH PLAN

WALL CORNER PLAN

NOTES:
1. ADDITIONAL CONTROL JOINTS MUST BE PROVIDED AT EACH FOOTING STEP.
2. WALL CONSTRUCTION JOINTS MUST BE LOCATED AT CONTROL JOINT LOCATIONS.
3. CUT EVERY OTHER HORIZONTAL BAR AT CONTROL JOINT LOCATIONS EXCEPT TOP AND BOTTOM BARS. PROVIDE A "V" JOINT ON ONE SIDE OF THE WALL (NON-FORMLINER SIDE) AT EACH CONTROL JOINT LOCATION.

4 S5.02 TYPICAL WALL CONTROL JOINT DETAIL

NTS

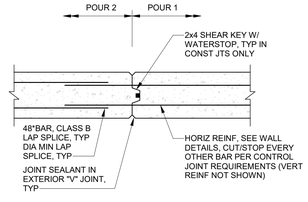

5 S5.02 TYPICAL WALL CONSTRUCTION JOINT DETAIL

NTS

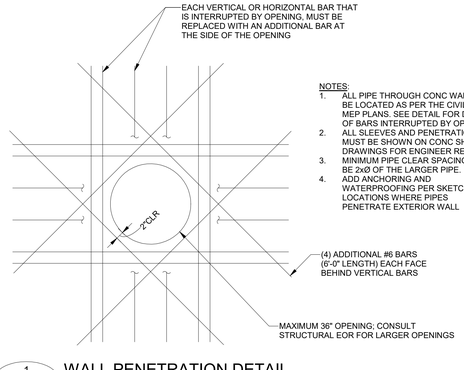

NOTES:
1. ALL PIPE THROUGH CONC WALL MUST BE LOCATED AS PER THE CIVIL OR MEP PLANS. SEE DETAIL FOR DETAILS OF BARS INTERRUPTED BY OPENING.
2. ALL SLEEVES AND PENETRATIONS MUST BE SHOWN ON CONC SHOP DRAWINGS FOR ENGINEER REVIEW.
3. MINIMUM PIPE CLEAR SPACING MUST BE 2xØ OF THE LARGER PIPE.
4. ADD ANCHORING AND WATERPROOFING PER SKETCH AT LOCATIONS WHERE PIPES PENETRATE EXTERIOR WALL

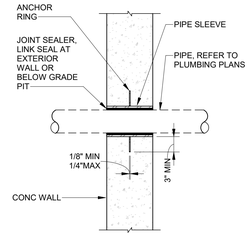

ANCHOR RING

1 S5.02 WALL PENETRATION DETAIL

NTS

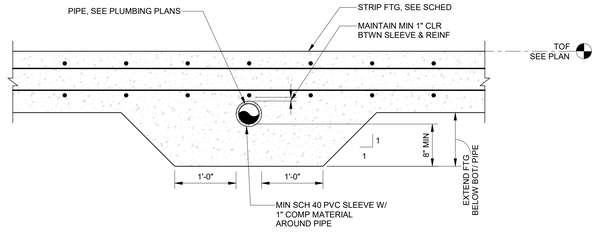

TYPE A - PIPE CAST IN THICKENED FOOTING

2 S5.02 PIPE DETAIL AT STRIP FOOTING

NTS

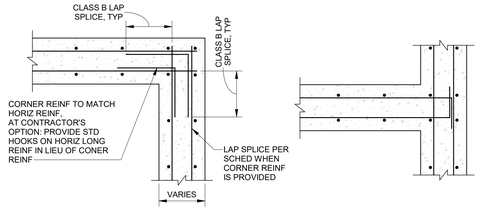

CORNER "T" JOINT

3 S5.02 TYPICAL CIP WALL CORNER REINF DETAILS - PLAN

NTS

tsk

314 South Water Street,
Suite 100
Henderson, NV 89015
phone: 702.456.3000
fax: 702.898.6209
www.tska.com

THESE DRAWINGS AND SPECIFICATIONS ARE THE PROPERTY OF TATE SNYDER KIMSEY ARCHITECTS AND MAY NOT BE REPRODUCED OR USED FOR ANY PURPOSE WITHOUT THE ARCHITECTS WRITTEN CONSENT. AS INSTRUMENTS OF SERVICE, THESE DOCUMENTS ARE NOT FINAL AND READY FOR USE, AND THEREFORE NOT VALID, UNLESS THEY ARE SEALED, SIGNED AND DATED.

Consultant

Kimley»Horn

PLEASE RECYCLE

Project

WEST WENDOVER NEW FS #13

ANYWHERE BUT HERE

Job No: 092767002

Owner

CITY OF WEST WENDOVER

NOT FOR CONSTRUCTION

Project Status

REVISIONS		
REV	DATE	DESCRIPTION

Sheet Title

FOUNDATION DETAILS

Date: Issue Date

Sheet No:

S5.02

BIM 360://WEST WENDOVER FIRE STATION/092767002 - WEST WENDOVER FS_STR_R21.rvt

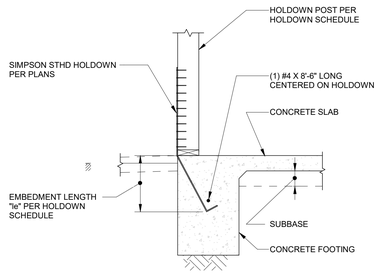

3 S5.03 TYPICAL DETAIL - STHD HOLDOWN ANCHOR AT CONCRETE FOOTING

NTS

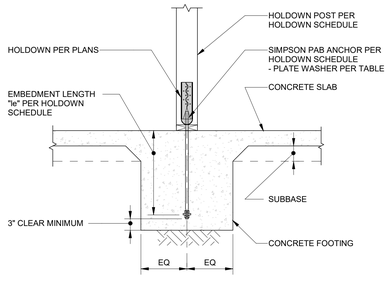

ANCHOR AT INTERIOR CONCRETE FOOTING

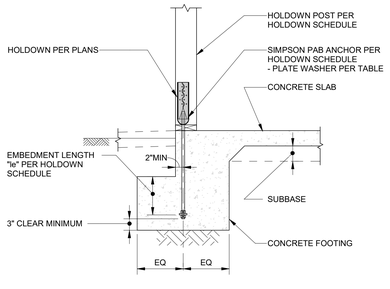

ANCHOR AT EXTERIOR CONCRETE FOOTING

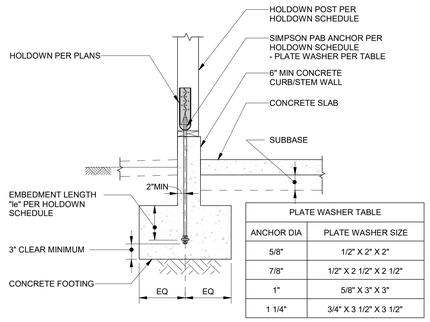

PLATE WASHER TABLE	
ANCHOR DIA	PLATE WASHER SIZE
5/8"	1/2" X 2" X 2"
7/8"	1/2" X 2 1/2" X 2 1/2"
1"	5/8" X 3" X 3"
1 1/4"	3/4" X 3 1/2" X 3 1/2"

ANCHOR AT CONCRETE CURB/STEM WALL

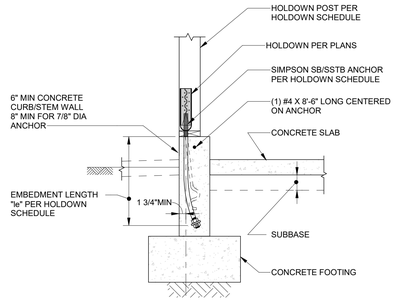

ANCHOR AT STEM WALL

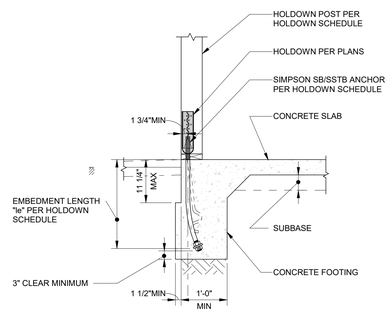

ANCHOR AT CONCRETE FOOTING

1 S5.03 TYPICAL DETAIL - PAB HOLDOWN ANCHOR AT CONCRETE FOOTING

NTS

2 S5.03 TYPICAL DETAIL - SB AND SSTB HOLDOWN ANCHOR

NTS

BIM 360://WEST WENDOVER FIRE STATION/092767002 - WEST WENDOVER FS_STR_R21.rvt

tsk
314 South Water Street,
Suite 100
Henderson, NV 89015
phone: 702.456.3000
fax: 702.898.6209
www.tska.com

THESE DRAWINGS AND SPECIFICATIONS ARE THE PROPERTY OF TATE SNYDER KIMSEY ARCHITECTS AND MAY NOT BE REPRODUCED OR USED FOR ANY PURPOSE WITHOUT THE ARCHITECTS WRITTEN CONSENT. AS INSTRUMENTS OF SERVICE, THESE DOCUMENTS ARE NOT FINAL AND READY FOR USE, AND THEREFORE NOT VALID, UNLESS THEY ARE SEALED, SIGNED AND DATED.

Consultant

Kimley»Horn

PLEASE RECYCLE

Project

WEST WENDOVER NEW FS #13

ANYWHERE BUT HERE

Job No: 092767002

Owner

CITY OF WEST WENDOVER

NOT FOR CONSTRUCTION

Project Status

REVISIONS		
REV	DATE	DESCRIPTION

Sheet Title

FOUNDATION DETAILS

Date: Issue Date

Sheet No:

S5.03

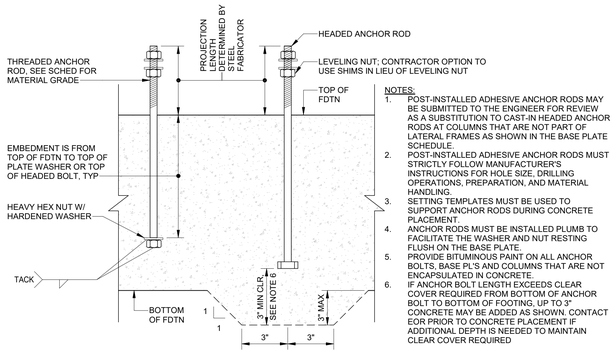

NOTES:
1. POST-INSTALLED ADHESIVE ANCHOR RODS MAY BE SUBMITTED TO THE ENGINEER FOR REVIEW AS A SUBSTITUTION TO CAST-IN HEADED ANCHOR RODS AT COLUMNS THAT ARE NOT PART OF LATERAL FRAMES AS SHOWN IN THE BASE PLATE SCHEDULE.
2. POST-INSTALLED ADHESIVE ANCHOR RODS MUST STRICTLY FOLLOW MANUFACTURER'S INSTRUCTIONS FOR HOLE SIZE, DRILLING OPERATIONS, PREPARATION, AND MATERIAL HANDLING.
3. SETTING TEMPLATES MUST BE USED TO SUPPORT ANCHOR RODS DURING CONCRETE PLACEMENT.
4. ANCHOR RODS MUST BE INSTALLED PLUMB TO FACILITATE THE WASHER AND NUT RESTING FLUSH ON THE BASE PLATE.
5. PROVIDE BITUMINOUS PAINT ON ALL ANCHOR BOLTS, BASE PL'S AND COLUMNS THAT ARE NOT ENCAPSULATED IN CONCRETE.
6. IF ANCHOR BOLT LENGTH EXCEEDS CLEAR COVER REQUIRED FROM BOTTOM OF ANCHOR BOLT TO BOTTOM OF FOOTING, UP TO 3" CONCRETE MAY BE ADDED AS SHOWN. CONTACT EOR PRIOR TO CONCRETE PLACEMENT IF ADDITIONAL DEPTH IS NEEDED TO MAINTAIN CLEAR COVER REQUIRED

2 S5.04 TYPICAL ANCHOR ROD DETAIL
NTS

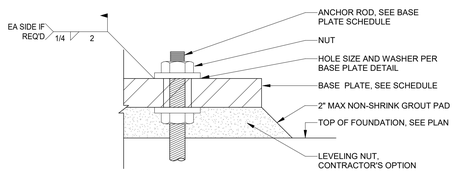

3 S5.04 TYPICAL BASE PLATE SECTION
NTS

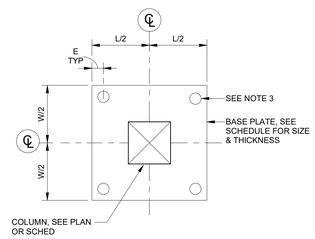

WOOD COLUMN

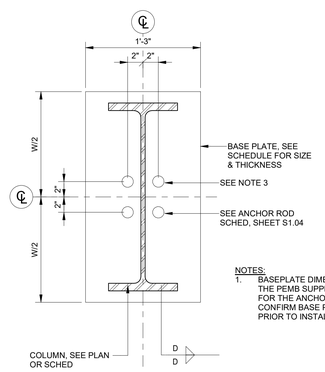

WIDE FLANGE COLUMN

NOTES:
1. BASEPLATE DIMENSIONS AND EDGE DISTANCES WERE PROVIDED BY THE PEMB SUPPLIER AND ARE NOTED AS THE THE BASIS OF DESIGN FOR THE ANCHOR SIZE AND EMBEDMENT DEPTH, CONTRACTOR TO CONFIRM BASE PLATE SIZE AND LAYOUT WITH THE PEMB SUPPLIER PRIOR TO INSTALLING ANCHORS.

AISC RECOMMENDED SIZES FOR ANCHOR-ROD HOLES IN BASE PLATES			
ANCHOR ROD DIAMETER	MAXIMUM HOLE DIAMETER, [1]	MINIMUM WASHER SIZE, [2,3]	MINIMUM WASHER THICKNESS
3/4"	1 5/16"	2"	1/4"
7/8"	1 9/16"	2 1/2"	5/16"
1"	1 13/16"	3"	3/8"
1 1/4"	2 1/16"	3"	1/2"
1 1/2"	2 5/16"	3 1/2"	1/2"
1 3/4"	2 3/4"	4"	5/8"
2"	3 1/4"	5"	3/4"
2 1/2"	3 3/4"	5 1/2"	7/8"

NOTES:
1. CIRCULAR OR SQUARE WASHERS MEETING THE WASHER SIZE ARE ACCEPTABLE.
2. IF PLATE WASHER CONFLICTS WITH COLUMN, CONTRACTOR MUST NOTIFY STRUCTURAL EOR PRIOR TO STEEL FABRICATION.
3. FOR BASE PLATES AT GRAVITY COLUMNS, WHEN BASE PLATES ARE LESS THAN 1 1/4" THICK, 1 1/16" DIA HOLES MAY BE USED FOR 3/4" DIA ANCHOR RODS WITH STANDARD WASHERS IN PLACE OF FABRICATED PLATE WASHERS.

1 S5.04 TYPICAL BASE PLATE DETAILS
NTS

tsk
314 South Water Street,
Suite 100
Henderson, NV 89015
phone: 702.456.3000
fax: 702.898.6209
www.tska.com

THESE DRAWINGS AND SPECIFICATIONS ARE THE PROPERTY OF TATE SNYDER KIMSEY ARCHITECTS AND MAY NOT BE REPRODUCED OR USED FOR ANY PURPOSE WITHOUT THE ARCHITECTS WRITTEN CONSENT. AS INSTRUMENTS OF SERVICE, THESE DOCUMENTS ARE NOT FINAL AND READY FOR USE, AND THEREFORE NOT VALID, UNLESS THEY ARE SEALED, SIGNED AND DATED.

Consultant
Kimley»Horn

PLEASE RECYCLE

Project
WEST WENDOVER NEW FS #13

ANYWHERE BUT HERE

Job No: 092767002

Owner
CITY OF WEST WENDOVER

NOT FOR CONSTRUCTION

Project Status

REVISIONS		
REV	DATE	DESCRIPTION

Sheet Title
FOUNDATION DETAILS

Date: Issue Date
Sheet No:
S5.04

BIM 360://WEST WENDOVER FIRE STATION/092767002 - WEST WENDOVER FS_STR_R21.rvt

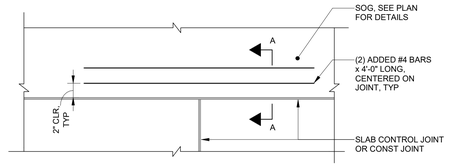

DISCONTINUOUS JOINT

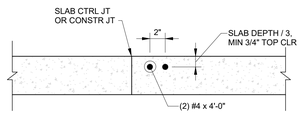

SECTION A - A

RE-ENTRANT CORNER

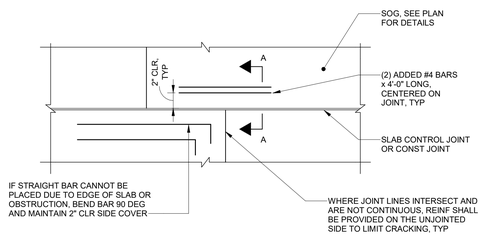

OFFSET JOINT

SUPPORTED ELEMENT	WIDTH
EQUIPMENT	8" BEYOND EQUIP FOOTPRINT
INTERIOR NON-LOAD BEARING WOOD WALL	2'-0" CENTERED ON WALL

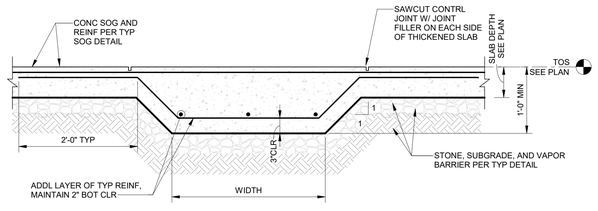

5 S5.11 THICKENED SLAB-ON-GRADE DETAIL
NTS

6 S5.11 ADDED REINF AT CONTROL JOINT OFFSETS AND RE-ENTRANT CORNERS
NTS

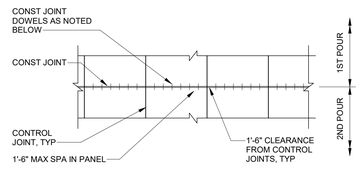

PLAN SECTION

DEPTH	REINFORCEMENT	TOP CLR	ALLOW . UNIFORM LOAD
4"	6x6-W2.1xW2.1 WWF	2"	100 PSF
8"	#4 AT 12" OC EW	2 1/2"	250 PCF

*BASED ON SUBGRADE MODULUS OF 200 PCI

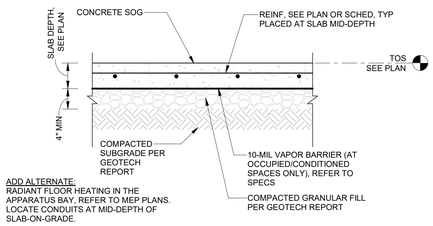

1 S5.11 TYPICAL SLAB-ON-GRADE
NTS

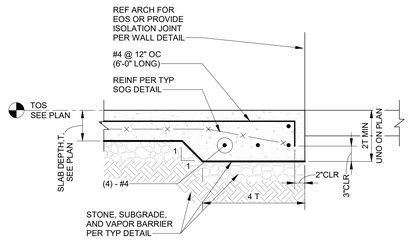

2 S5.11 TYPICAL SLAB-ON-GRADE EDGE
NTS

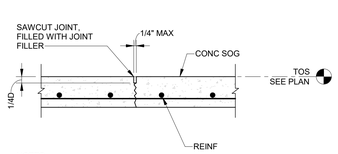

NOTES:
1. SAWCUT JOINT IMMEDIATELY AFTER INITIAL SET, BEFORE CONCRETE BEGINS TO COOL, AS SOON AS CONCRETE SURFACE IS FIRM ENOUGH TO NOT BE DAMAGED BY BLADE AND BEFORE RANDOM SHRINKAGE CRACKING OCCURS.

3 S5.11 TYPICAL SLAB-ON-GRADE JOINT - CTRL JT
NTS

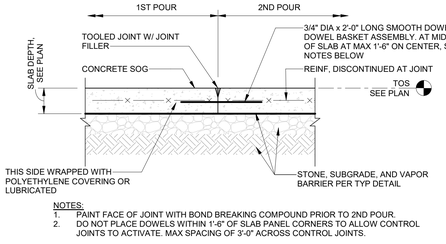

NOTES:
1. PAINT FACE OF JOINT WITH BOND BREAKING COMPOUND PRIOR TO 2ND POUR.
2. DO NOT PLACE DOWELS WITHIN 1'-6" OF SLAB PANEL CORNERS TO ALLOW CONTROL JOINTS TO ACTIVATE. MAX SPACING OF 3'-0" ACROSS CONTROL JOINTS.

4 S5.11 TYPICAL CONSTRUCTION JOINT
NTS

tsk
314 South Water Street,
Suite 100
Henderson, NV 89015
phone: 702.456.3000
fax: 702.898.6209
www.tska.com

THESE DRAWINGS AND SPECIFICATIONS ARE THE PROPERTY OF TATE SNYDER KIMSEY ARCHITECTS AND MAY NOT BE REPRODUCED OR USED FOR ANY PURPOSE WITHOUT THE ARCHITECTS WRITTEN CONSENT. AS INSTRUMENTS OF SERVICE, THESE DOCUMENTS ARE NOT FINAL AND READY FOR USE, AND THEREFORE NOT VALID, UNLESS THEY ARE SEALED, SIGNED AND DATED.

Consultant

Kimley»Horn

PLEASE RECYCLE

Project
WEST WENDOVER NEW FS #13

ANYWHERE BUT HERE

Job No: 092767002

Owner
CITY OF WEST WENDOVER

NOT FOR CONSTRUCTION

Project Status

REVISIONS		
REV	DATE	DESCRIPTION

Sheet Title
SLAB-ON-GRADE DETAILS

Date: Issue Date
Sheet No:
S5.11

BIM 360://WEST WENDOVER FIRE STATION/092767002 - WEST WENDOVER FS_STR_R21.rvt

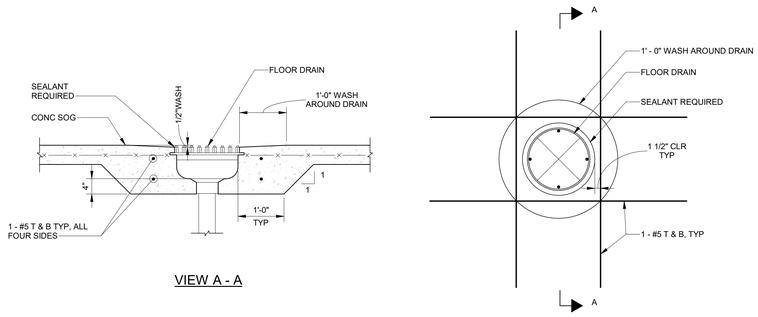

VIEW A - A

8 S5.12 FLOOR DRAIN DETAIL
NTS

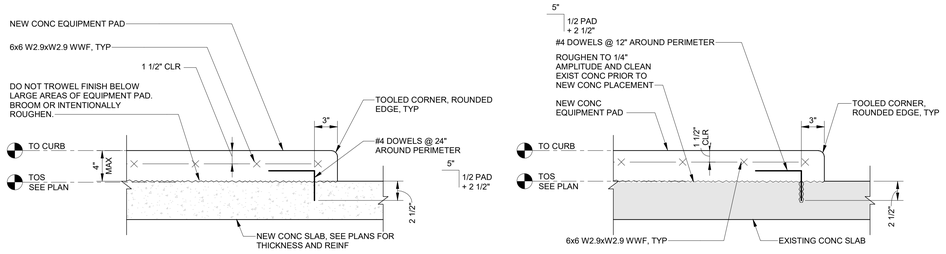

PAD ON NEW CONC SLAB

PAD ON EXISTING CONC SLAB

NOTES:
1. PADS ON SLAB-ON-GRADE MAY BE NORMAL-WT CONC. PADS ON ELEVATED SLABS MUST BE LIGHT-WT CONC UNLESS APPROVED BY ENGINEER.
2. PROVIDE BONDING AGENT ON CONC PRIOR TO NEW CONC PLACEMENT.
3. PAD EXTENTS MUST BE MIN 4" BEYOND FOOTPRINT OF SUPPORTED EQUIPMENT. EQUIPMENT SIZES MUST BE COORDINATED WITH MEP TRADES.
4. EQUIPMENT PROVIDER MUST BE RESPONSIBLE FOR DESIGNING AND SUPPLYING ANCHORS FOR EQUIPMENT ATTACHMENT.

6 S5.12 EQUIPMENT PAD DETAIL
NTS

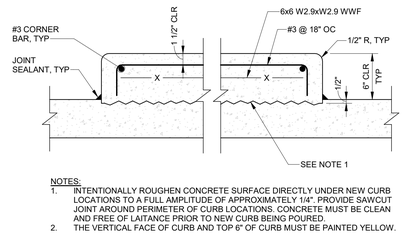

NOTES:
1. INTENTIONALLY ROUGHEN CONCRETE SURFACE DIRECTLY UNDER NEW CURB LOCATIONS TO A FULL AMPLITUDE OF APPROXIMATELY 1/4". PROVIDE SAWCUT JOINT AROUND PERIMETER OF CURB LOCATIONS. CONCRETE MUST BE CLEAN AND FREE OF LAITANCE PRIOR TO NEW CURB BEING POURED.
2. THE VERTICAL FACE OF CURB AND TOP 6" OF CURB MUST BE PAINTED YELLOW.

7 S5.12 SLAB EDGE/CURB REINFORCING
NTS

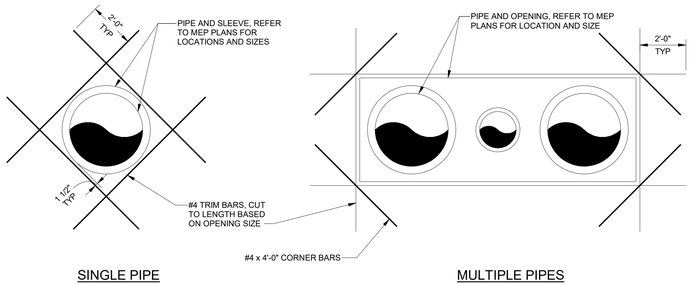

SINGLE PIPE

MULTIPLE PIPES

NOTES:
1. FOR SINGLE PIPE OPENINGS, PLACE TRIM BARS AT 45-DEGREES TO PRIMARY SLAB REINF.
2. DO NOT POUR CONCRETE TIGHT TO PIPES, PROVIDE ISOLATION MATERIAL. ISOLATION NOT REQ'D WHERE SHRINKAGE COMPENSATING CONC IS USED.

3 S5.12 SLAB-ON-GRADE OPENINGS
NTS

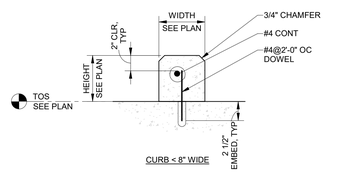

CURB < 8" WIDE

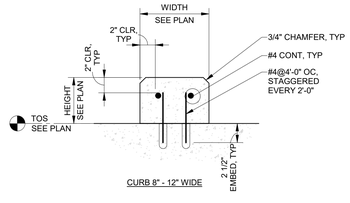

CURB 8" - 12" WIDE

4 S5.12 TYPICAL ISOLATED CURB DETAIL
NTS

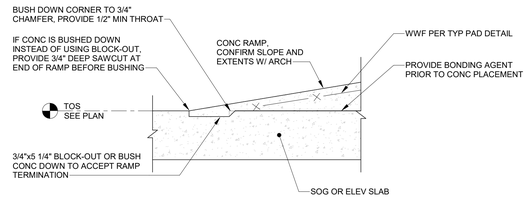

5 S5.12 TYPICAL CONCRETE RAMP DETAIL
NTS

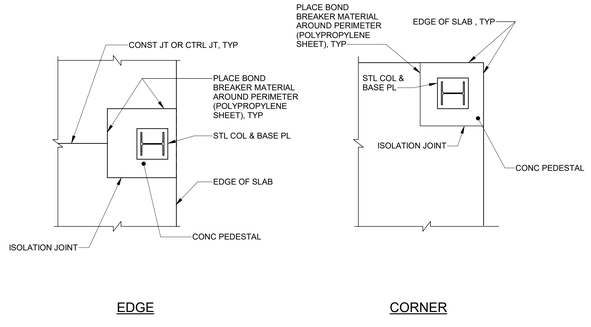

EDGE

CORNER

1 S5.12 TYPICAL COLUMN ISOLATION JOINTS
NTS

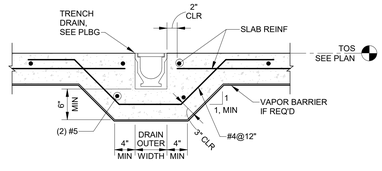

2 S5.12 TRENCH DRAIN IN SLAB
NTS

tsk
314 South Water Street,
Suite 100
Henderson, NV 89015
phone: 702.456.3000
fax: 702.898.6209
www.tska.com

THESE DRAWINGS AND SPECIFICATIONS ARE THE PROPERTY OF TATE SNYDER KIMSEY ARCHITECTS AND MAY NOT BE REPRODUCED OR USED FOR ANY PURPOSE WITHOUT THE ARCHITECTS WRITTEN CONSENT. AS INSTRUMENTS OF SERVICE, THESE DOCUMENTS ARE NOT FINAL AND READY FOR USE, AND THEREFORE NOT VALID, UNLESS THEY ARE SEALED, SIGNED AND DATED.

Consultant

Kimley»Horn

PLEASE RECYCLE

Project
WEST WENDOVER NEW FS #13

ANYWHERE BUT HERE

Job No: 092767002

Owner
CITY OF WEST WENDOVER

NOT FOR CONSTRUCTION

Project Status

REVISIONS		
REV	DATE	DESCRIPTION

Sheet Title
SLAB-ON-GRADE DETAILS

Date: Issue Date
Sheet No:
S5.12

BIM 360://WEST WENDOVER FIRE STATION/092767002 - WEST WENDOVER FS_STR_R21.rvt

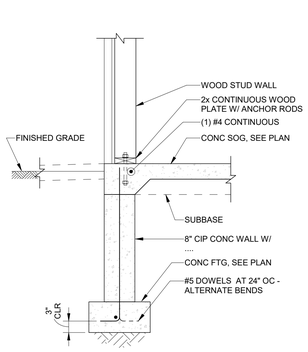

5 S5.21 EXTERIOR WOOD STUD WALL FOOTING
NTS

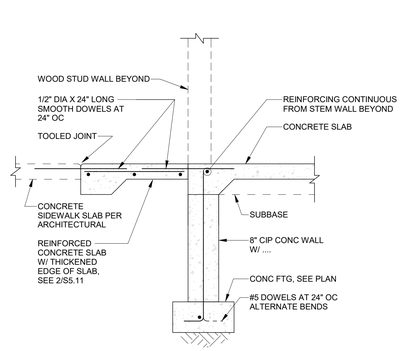

6 S5.21 EXTERIOR WOOD STUD WALL FOOTING AT WALL OPENING
NTS

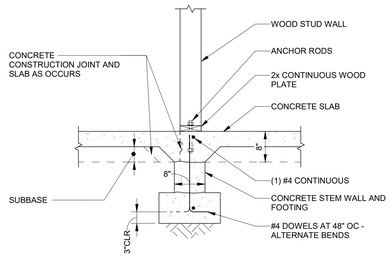

1 S5.21 INTERIOR WOOD STUD WALL FOOTING
NTS

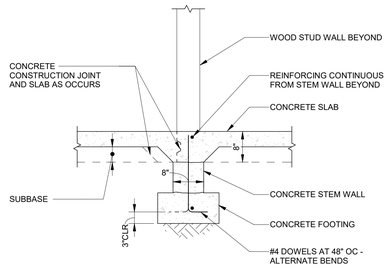

2 S5.21 INTERIOR WOOD STUD WALL FOOTING AT WALL OPENING
NTS

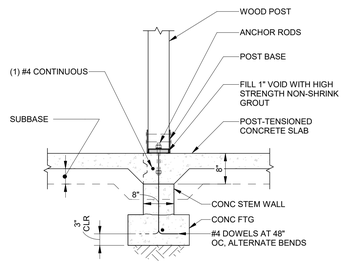

3 S5.21 INTERIOR WOOD POST FOOTING
NTS

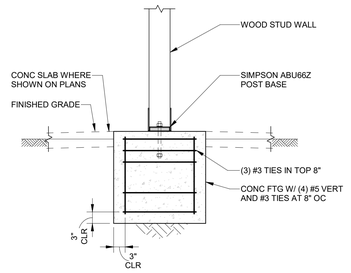

4 S5.21 EXTERIOR WOOD POST ON PEDESTAL
NTS

tsk
314 South Water Street,
Suite 100
Henderson, NV 89015
phone: 702.456.3000
fax: 702.898.6209
www.tska.com

THESE DRAWINGS AND SPECIFICATIONS ARE THE PROPERTY OF TATE SNYDER KIMSEY ARCHITECTS AND MAY NOT BE REPRODUCED OR USED FOR ANY PURPOSE WITHOUT THE ARCHITECTS WRITTEN CONSENT. AS INSTRUMENTS OF SERVICE, THESE DOCUMENTS ARE NOT FINAL AND READY FOR USE, AND THEREFORE NOT VALID, UNLESS THEY ARE SEALED, SIGNED AND DATED.

Consultant

Kimley»Horn

PLEASE RECYCLE

Project
WEST WENDOVER NEW FS #13

ANYWHERE BUT HERE

Job No: 092767002

Owner
CITY OF WEST WENDOVER

NOT FOR CONSTRUCTION

Project Status

REVISIONS		
REV	DATE	DESCRIPTION

Sheet Title
WOOD DETAILS

Date: Issue Date
Sheet No:
S5.21

BIM 360://WEST WENDOVER FIRE STATION/092767002 - WEST WENDOVER FS_STR_R21.rvt

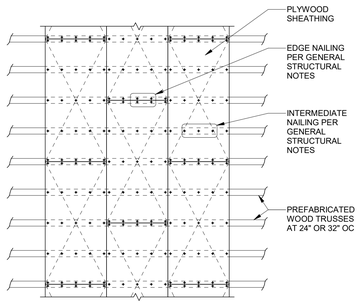

4 S5.22 TYPICAL DETAIL - ROOF PLYWOOD AT PREFABRICATED WOOD TRUSSES
NTS

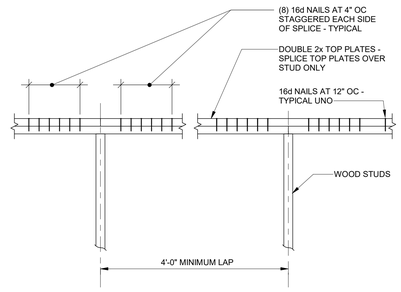

5 S5.22 TYPICAL DETAIL - DOUBLE TOP PLATE SPLICE
NTS

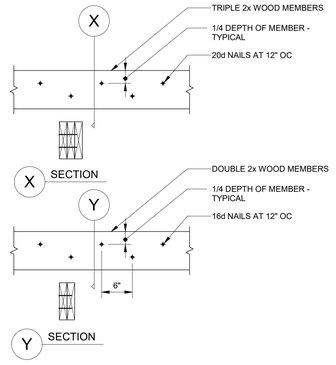

6 S5.22 TYPICAL DETAIL - BUILT-UP WOOD MEMBERS
NTS

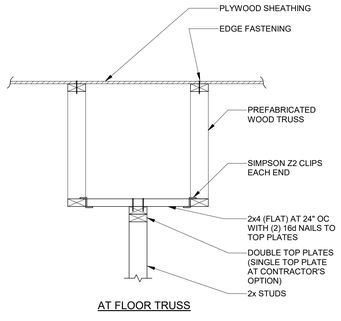

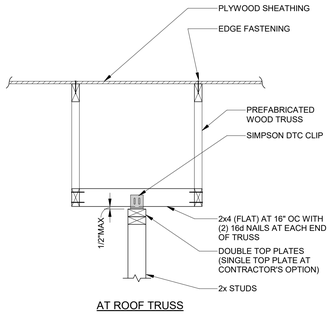

1 S5.22 TYPICAL DETAIL - NON-BEARING WALL AT WOOD TRUSS
NTS

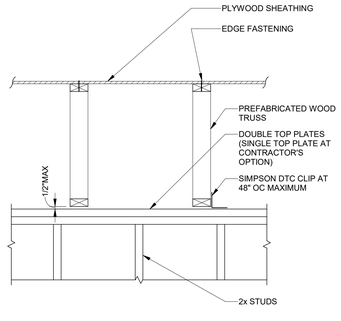

2 S5.22 TYPICAL DETAIL - INTERIOR NON-BEARING STUD WALLS AT TRUSSES OR TJI'S
NTS

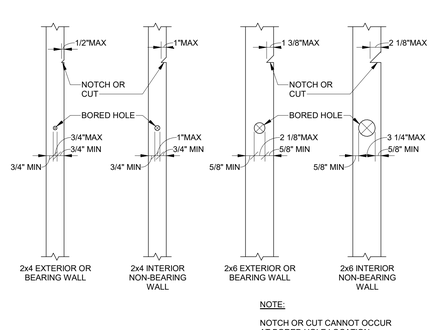

NOTE:

NOTCH OR CUT CANNOT OCCUR AT BORED HOLE LOCATION

3 S5.22 TYPICAL DETAIL - TYPICAL ALLOWABLE HOLES AND NOTCHES IN WOOD STUDS
NTS

tsk
314 South Water Street,
Suite 100
Henderson, NV 89015
phone: 702.456.3000
fax: 702.898.6209
www.tska.com

THESE DRAWINGS AND SPECIFICATIONS ARE THE PROPERTY OF TATE SNYDER KIMSEY ARCHITECTS AND MAY NOT BE REPRODUCED OR USED FOR ANY PURPOSE WITHOUT THE ARCHITECTS WRITTEN CONSENT. AS INSTRUMENTS OF SERVICE, THESE DOCUMENTS ARE NOT FINAL AND READY FOR USE, AND THEREFORE NOT VALID, UNLESS THEY ARE SEALED, SIGNED AND DATED.

Consultant

Kimley»Horn

PLEASE RECYCLE

Project
WEST WENDOVER NEW FS #13

ANYWHERE BUT HERE

Job No: 092767002

Owner
CITY OF WEST WENDOVER

NOT FOR CONSTRUCTION

Project Status

REVISIONS		
REV	DATE	DESCRIPTION

Sheet Title
WOOD DETAILS

Date: Issue Date
Sheet No:
S5.22

BIM 360://WEST WENDOVER FIRE STATION/092767002 - WEST WENDOVER FS_STR_R21.rvt

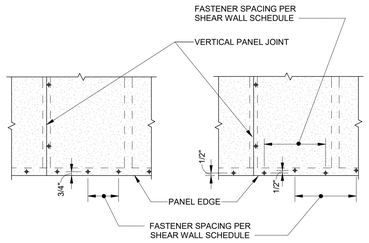

SINGLE ROW OF FASTENERS DOUBLE ROW OF FASTENERS

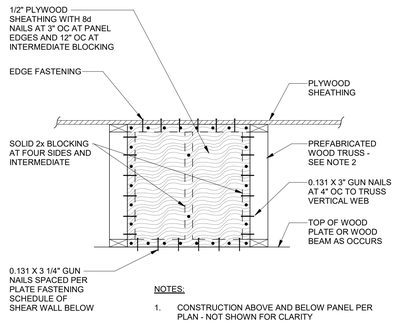

NOTES:

1. CONSTRUCTION ABOVE AND BELOW PANEL PER PLAN - NOT SHOWN FOR CLARITY
2. TRUSS MANUFACTURER SHALL PROVIDE VERTICAL WEB TO MATCH LOCATION OF SHEAR PANEL

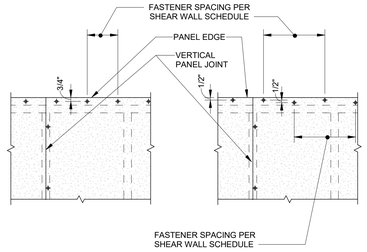

SINGLE ROW OF FASTENERS DOUBLE ROW OF FASTENERS

8 S5.23 TYPICAL DETAIL - SHEAR WALL PANEL ATTACHMENT AT SILL PLATE
NTS

9 S5.23 PLYWOOD SHEAR BLOCKING
NTS

10 S5.23 TYPICAL DETAIL - SHEAR WALL PANEL ATTACHMENT AT TOP PLATE
NTS

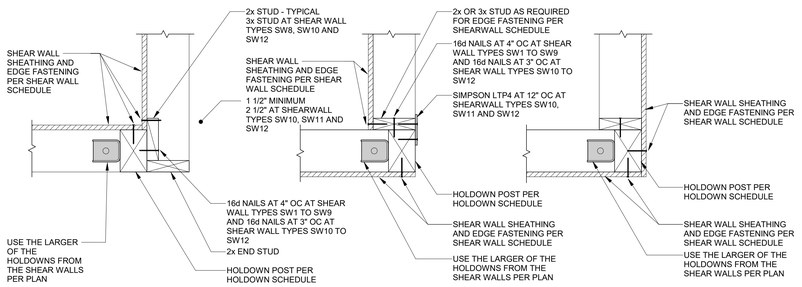

SHEATHING AT INSIDE FACE SHEATHING AT INSIDE/OUTSIDE FACE SHEATHING AT OUTSIDE FACE

NOTE:

THIS DETAIL ONLY APPLIES WHEN SHEATHING IS PLACED ON ONE SIDE OF THE WALL ONLY

5 S5.23 TYPICAL DETAIL - PLAN VIEW - SHEARWALLS AND HOLDOWNS AT WALL CORNERS
NTS

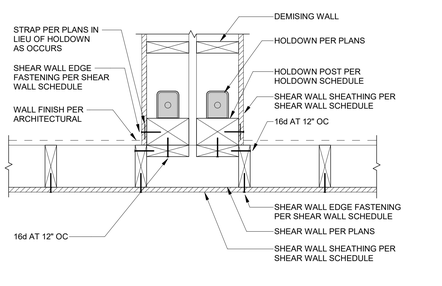

6 S5.23 TYPICAL DETAIL - PLAN VIEW - DEMISING WALL AT EXTERIOR WALL
NTS

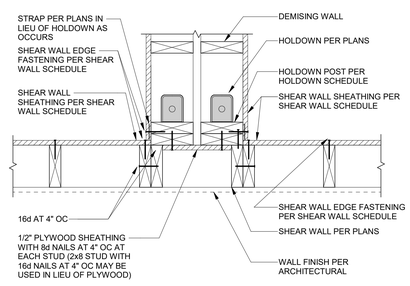

7 S5.23 TYPICAL DETAIL - PLAN VIEW - CORRIDOR SHEAR WALL DEMISING WALL
NTS

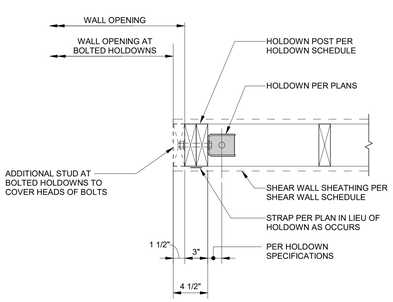

1 S5.23 TYPICAL DETAIL - PLAN VIEW - HOLDOWN AT OPENING
NTS

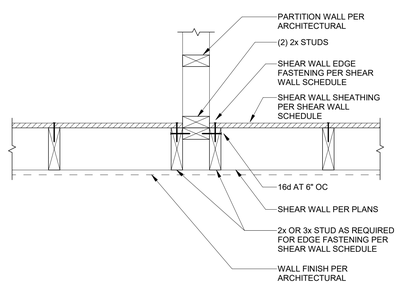

NOTE:

PLYWOOD MAY BE PLACED ON EXTERIOR FACE OR INTERIOR FACE OF SHEAR WALL

2 S5.23 TYPICAL DETAIL - PLAN VIEW - SHEAR WALL AT PARTITION WALL
NTS

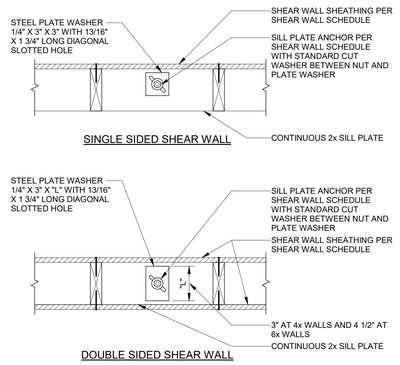

3 S5.23 TYPICAL DETAIL - PLAN VIEW - PLATE WASHER AT SHEAR WALL SILL PLATE ANCHOR
NTS

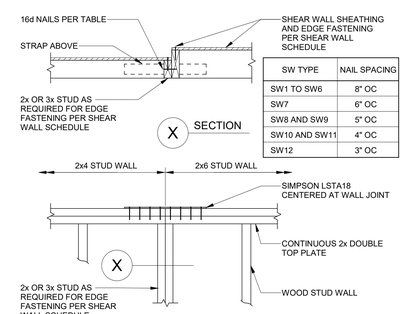

SW TYPE	NAIL SPACING
SW1 TO SW6	8" OC
SW7	6" OC
SW8 AND SW9	5" OC
SW10 AND SW11	4" OC
SW12	3" OC

4 S5.23 TYPICAL DETAIL - SHEAR WALL AT TRANSITION OF 2x4 TO 2x6 WALL
NTS

tsk
314 South Water Street,
Suite 100
Henderson, NV 89015
phone: 702.456.3000
fax: 702.898.6209
www.tska.com

THESE DRAWINGS AND SPECIFICATIONS ARE THE PROPERTY OF TATE SNYDER KIMSEY ARCHITECTS AND MAY NOT BE REPRODUCED OR USED FOR ANY PURPOSE WITHOUT THE ARCHITECTS WRITTEN CONSENT. AS INSTRUMENTS OF SERVICE, THESE DOCUMENTS ARE NOT FINAL AND READY FOR USE, AND THEREFORE NOT VALID, UNLESS THEY ARE SEALED, SIGNED AND DATED.

Consultant

Kimley»Horn

PLEASE RECYCLE

Project
WEST WENDOVER NEW FS #13

ANYWHERE BUT HERE

Job No: 092767002

Owner
CITY OF WEST WENDOVER

NOT FOR CONSTRUCTION

Project Status

REVISIONS		
REV	DATE	DESCRIPTION

Sheet Title
WOOD DETAILS

Date: Issue Date
Sheet No:
S5.23

BIM 360://WEST WENDOVER FIRE STATION/092767002 - WEST WENDOVER FS_STR_R21.rvt

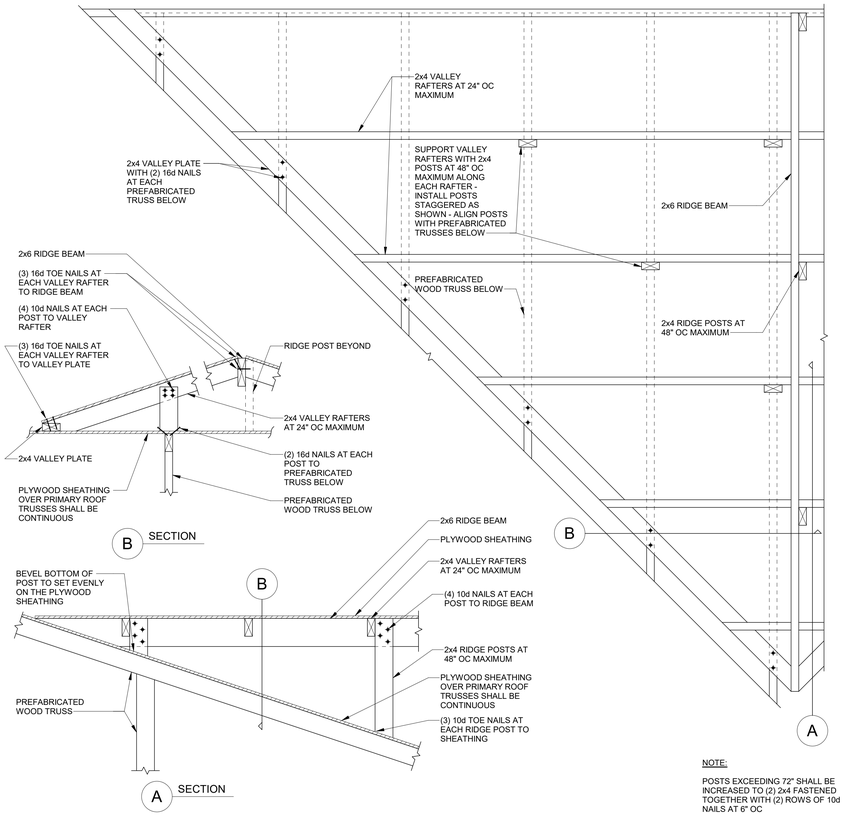

5 S5.24 TYPICAL DETAIL - PLAN VIEW - TYPICAL OVER FRAMING AT PREFABRICATED WOOD TRUSSES

NTS

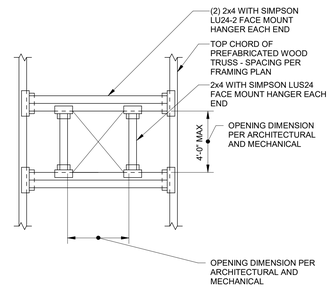

6 S5.24 TYPICAL DETAIL - FRAMING AROUND SMALL ROOF OPENING

NTS

NAIL DIMENSIONS

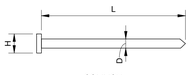

COMMON

L = LENGTH
D = DIAMETER
H = HEAD DIAMETER

TYPE		PENNYWEIGHT						
		6d	7d	8d	10d	12d	16d	20d
	L	2"	2 1/4"	2 1/2"	3"	3 1/4"	3 1/2"	4"
COMMON	D	0.113"	0.113"	0.131"	0.148"	0.148"	0.162"	0.192"
	H	0.266"	0.266"	0.281"	0.312"	0.312"	0.344"	0.406"

NOTES:

1. WHERE PENNYWEIGHTS ARE SPECIFIED, NAIL DIMENSIONS SHALL MATCH OR EXCEED THIS SCHEDULE UNLESS NOTED OTHERWISE.
2. ALL ALTERNATES OR SUBSTITUTIONS MUST BE SUBMITTED TO THE ENGINEER OF RECORD FOR REVIEW AND APPROVAL.

1 S5.24 TYPICAL DETAIL - NAIL DIMENSIONS SCHEDULE

NTS

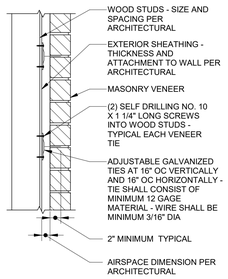

2 S5.24 TYPICAL DETAIL - VENEER CONNECTION AT WOOD STUD WALL

NTS

FASTENING SCHEDULE U.N.O.

CONNECTED ELEMENTS	FASTENER SIZE AND PATTERN
JOIST TO ALL SILL OR GIRDER, TOE NAIL	(3) 8d
BRIDGING TO JOIST, TOE NAIL EACH END	(2) 8d
PLATE TO JOIST OR BLOCKING, FACE NAIL	16d AT 16" OC
TOP PLATE TO STUD, END NAIL	(2) 16d
STUD TO PLATE	(4) 8d, TOE NAIL OR (2) 16d, END NAIL
DOUBLED STUDS, FACE NAIL	16d AT 24" OC
DOUBLED TOP PLATES, FACE NAIL	16d AT 16" OC
TOP PLATE, LAPS AND INTERSECTIONS, FACE NAIL	(2) 16d
CONTINUOUS HEADER, TWO PIECES	16d AT 16" OC ALONG EACH EDGE
CEILING JOISTS TO PLATE, TOE NAIL	(3) 8d
CONTINUOUS HEADER TO STUDS, TOE NAIL	(4) 8d
CEILING JOISTS, LAPS OVER PARTITIONS, FACE NAIL	(3) 16d
CEILING JOISTS TO PARALLEL RAFTERS, FACE NAIL	(3) 16d
RAFTER TO PLATE, TOE NAIL	(3) 8d
BUILT-UP CORNER STUDS	16d AT 24" OC

3 S5.24 TYPICAL WOOD FASTENING SCHEDULE

NTS

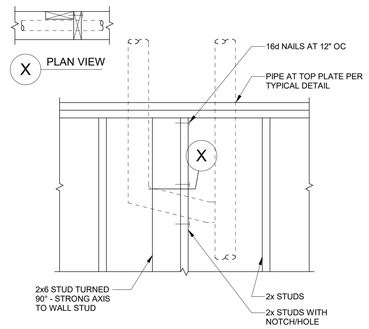

4 S5.24 TYPICAL DETAIL - PIPE AT WOOD STUD WALL

NTS

tsk
314 South Water Street,
Suite 100
Henderson, NV 89015
phone: 702.456.3000
fax: 702.898.6209
www.tska.com

THESE DRAWINGS AND SPECIFICATIONS ARE THE PROPERTY OF TATE SNYDER KIMSEY ARCHITECTS AND MAY NOT BE REPRODUCED OR USED FOR ANY PURPOSE WITHOUT THE ARCHITECTS WRITTEN CONSENT. AS INSTRUMENTS OF SERVICE, THESE DOCUMENTS ARE NOT FINAL AND READY FOR USE, AND THEREFORE NOT VALID, UNLESS THEY ARE SEALED, SIGNED AND DATED.

Consultant

Kimley»Horn

PLEASE RECYCLE

Project
WEST WENDOVER NEW FS #13

ANYWHERE BUT HERE

Job No: 092767002

Owner
CITY OF WEST WENDOVER

NOT FOR CONSTRUCTION

Project Status

REVISIONS		
REV	DATE	DESCRIPTION

Sheet Title
WOOD DETAILS

Date: Issue Date

Sheet No:
S5.24

BIM 360://WEST WENDOVER FIRE STATION/092767002 - WEST WENDOVER FS_STR_R21.rvt

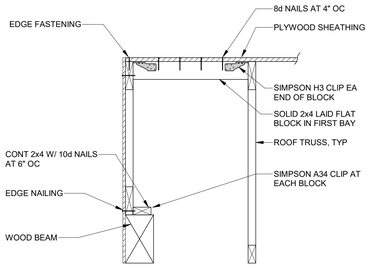

7 S5.26 WOOD TRUSS AT EXTERIOR WOOD STUD WALL

NTS

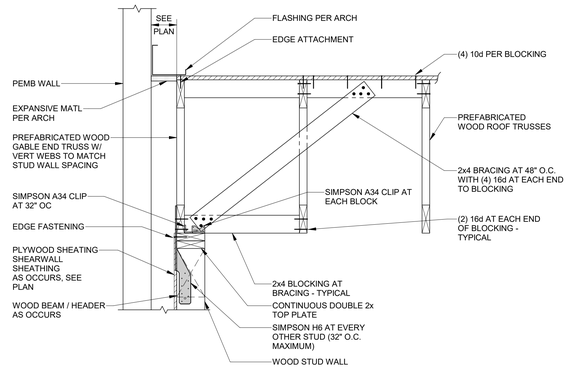

8 S5.26 WOOD TRUSS AT EXTERIOR WOOD STUD WALL

NTS

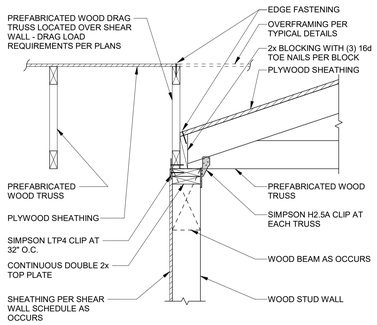

4 S5.26 WOOD TRUSS AT INTERIOR WOOD STUD WALL

NTS

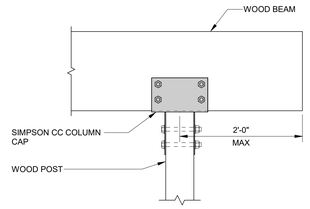

5 S5.26 WOOD BEAM TO WOOD POST CONNECTION

NTS

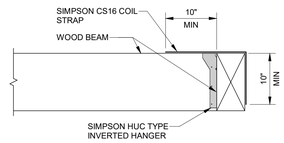

6 S5.26 INVERTED WOOD BEAM CONNECTION TO WOOD BEAM

NTS

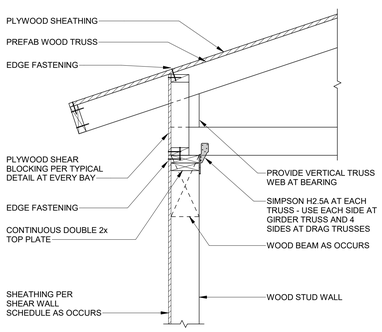

HIGH HEEL

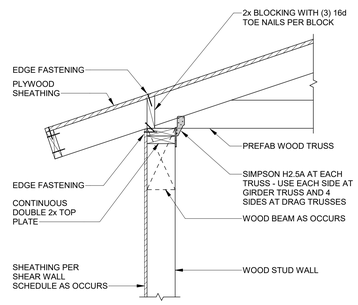

LOW HEEL

1 S5.26 WOOD TRUSS AT EXTERIOR WOOD STUD WALL

NTS

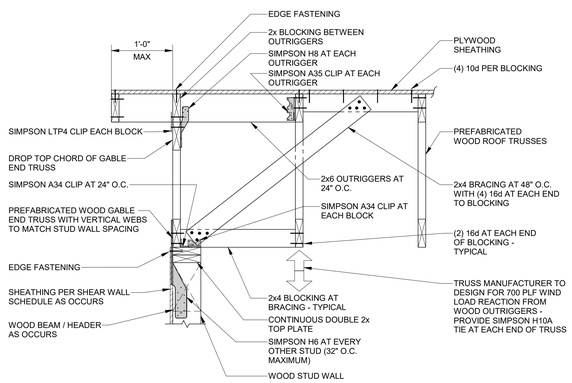

2 S5.26 WOOD TRUSS AT EXTERIOR WOOD STUD WALL

NTS

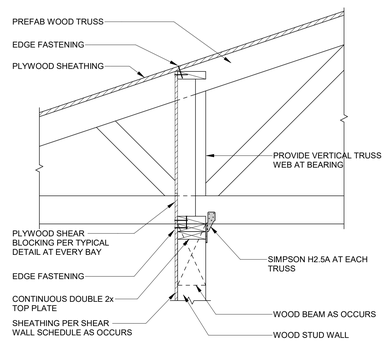

3 S5.26 WOOD TRUSS AT INTERIOR WOOD STUD WALL

NTS

BIM 360://WEST WENDOVER FIRE STATION/092767002 - WEST WENDOVER FS_STR_R21.rvt

tsk

314 South Water Street,
Suite 100
Henderson, NV 89015
phone: 702.456.3000
fax: 702.898.6209
www.tska.com

THESE DRAWINGS AND SPECIFICATIONS ARE THE PROPERTY OF TATE SNYDER KIMSEY ARCHITECTS AND MAY NOT BE REPRODUCED OR USED FOR ANY PURPOSE WITHOUT THE ARCHITECTS WRITTEN CONSENT. AS INSTRUMENTS OF SERVICE, THESE DOCUMENTS ARE NOT FINAL AND READY FOR USE, AND THEREFORE NOT VALID, UNLESS THEY ARE SEALED, SIGNED AND DATED.

Consultant

Kimley»Horn

PLEASE RECYCLE

Project

WEST WENDOVER NEW FS #13

ANYWHERE BUT HERE

Job No: 092767002

Owner

CITY OF WEST WENDOVER

NOT FOR CONSTRUCTION

Project Status

REVISIONS		
REV	DATE	DESCRIPTION

Sheet Title

WOOD DETAILS

Date: Issue Date

Sheet No:

S5.26

GENERAL NEW NOTES:

1. PRIOR TO SUBMITTING BID, VISIT THE JOB SITE AND BECOME FULLY ACQUAINTED WITH THE EXISTING CONDITIONS OF THE PROJECT. REVIEW THE GENERAL NOTES, SPECIFICATIONS AND OTHER DRAWINGS FOR ADDITIONAL REQUIREMENTS WHICH MAY NOT BE SPECIFICALLY CALLED OUT IN THIS PORTION OF THE CONSTRUCTION DOCUMENTS. NOTIFY ARCHITECT, ENGINEER AND/OR OWNER OF CONFLICTS OR DISCREPANCIES PRIOR TO SUBMISSION OF BID.
2. REFER TO ARCHITECTURAL DRAWINGS FOR RELATED CONSTRUCTION DETAILS AS APPLICABLE TO THE HVAC SYSTEM. VERIFY CHASES AND PENETRATIONS SHOWN ON ARCHITECTURAL DRAWINGS THAT ARE INTENDED FOR DUCTWORK AND PIPING MEET REQUIREMENTS.
3. ALL WORK SHALL CONFORM TO THE APPLICABLE LOCAL, STATE, AND FEDERAL CODES AND REGULATIONS, INCLUDING THE FOLLOWING:
   A. 2018 INTERNATIONAL BUILDING CODE
   B. 2018 INTERNATIONAL MECHANICAL CODE
   C. 2018 INTERNATIONAL PLUMBING CODE
   D. 2018 INTERNATIONAL ENERGY CONSERVATION CODE
   E. 2018 NATIONAL FIRE PROTECTION CODE
4. COORDINATE LOCATION OF ROOF PENETRATIONS WITH THE ARCHITECTURAL AND STRUCTURAL DRAWINGS.
5. PROVIDE SEISMIC RESTRAINTS AS NEEDED FOR THE MECHANICAL SYSTEMS IN THE PROJECT BASED ON THE SEISMIC ANALYSIS REQUIRED BY THE SPECIFICATIONS.
6. COORDINATE THE INSTALLATION OF THE MECHANICAL SYSTEMS WITH OTHER TRADES TO ENSURE A NEAT AND ORDERLY INSTALLATION. INSTALL DUCTWORK AND PIPING AS TIGHT TO STRUCTURE AS POSSIBLE. COORDINATE WITH OTHER TRADES TO AVOID CONFLICTS. COORDINATE INSTALLATION OF DUCTWORK AND PIPING TO AVOID CONFLICTS WITH ELECTRICAL PANELS, LIGHTING FIXTURES, ETC. ANY MODIFICATIONS REQUIRED DUE TO LACK OF COORDINATION WILL BE THE RESPONSIBILITY OF THE CONTRACTOR AT NO EXTRA COST TO THE OWNER.
7. ALL MECHANICAL EQUIPMENT SHOWN ON THE MECHANICAL PLANS SHALL BE PROVIDED BY DIVISION 23 UNLESS OTHERWISE NOTED.
8. NEW MECHANICAL EQUIPMENT, DUCTWORK AND PIPING ARE SHOWN AT APPROXIMATE LOCATIONS. FIELD MEASURE FINAL DUCTWORK AND PIPING LOCATIONS PRIOR TO FABRICATION AND MAKE ADJUSTMENTS AS REQUIRED TO FIT THE DUCTWORK AND PIPING WITHIN THE AVAILABLE SPACE. VERIFY THAT FINAL EQUIPMENT LOCATIONS MEET MANUFACTURER'S RECOMMENDATIONS REGARDING SERVICE CLEARANCE AND PROPER AIRFLOW CLEARANCE AROUND EQUIPMENT.
9. INDOOR AIR QUALITY MEASURES: PROTECT INSIDE OF (INSTALLED AND DELIVERED) DUCTWORK AND HVAC UNITS FROM EXPOSURE TO DUST, DIRT, PAINT AND MOISTURE. REPLACE INSULATION THAT HAS BECOME WET AT ANY TIME DURING CONSTRUCTION, DRYING THE INSULATION IS NOT ACCEPTABLE. SEAL ANY TEARS OR JOINTS OF INTERNAL FIBERGLASS INSULATION. REMOVE DEBRIS FROM CEILING/RETURN AIR PLENUM INCLUDING DUST. AN INDEPENDENT, PROFESSIONAL DUCT CLEANING COMPANY SHALL VACUUM CLEAN ANY DUCTWORK CONNECTED TO HVAC UNITS THAT WERE OPERATED DURING THE CONSTRUCTION PERIOD AFTER NEW FILTERS ARE INSTALLED AND PRIOR TO TURNING SYSTEM OVER TO THE OWNER. THE INTERNAL SURFACES AND ASSOCIATED COILS OF ANY HVAC UNITS THAT WERE OPERATED SHALL ALSO BE CLEANED.
10. INSTALL DUCTWORK AND PIPING PARALLEL TO BUILDING COLUMN LINES UNLESS OTHERWISE SHOWN OR NOTED.
11. OVERHEAD HANGERS AND SUPPORTS FOR EQUIPMENT, DUCTWORK AND PIPING SHALL BE FASTENED TO BUILDING JOISTS OR BEAMS. DO NOT ATTACH HANGERS AND SUPPORTS TO THE ABOVE FLOOR SLAB OR ROOF EXCEPT WHERE CONCRETE INSERTS IN CONCRETE SLABS ARE ALLOWED BY THE SPECIFICATIONS.
12. COORDINATE LOCATION OF EQUIPMENT SUPPORTS WITH LOCATION OF EQUIPMENT ACCESS PANELS/DOORS TO ENABLE SERVICE OF EQUIPMENT AND/OR FILTER REPLACEMENT.
13. SEAL PENETRATIONS THROUGH THE BUILDING COMPONENTS IN ACCORDANCE WITH THE CONTRACT SPECIFICATIONS. FIREPROOF PENETRATIONS THROUGH FIRE RATED COMPONENTS IN ACCORDANCE WITH U.L. REQUIREMENTS.
14. DRAIN, FLUSH, AND REFILL ALL PIPING SYSTEMS NECESSARY TO PERFORM THE WORK. REFERENCE SPECIFICATIONS FOR FLUSHING PERFORMANCE REQUIREMENTS AND SUBMIT FLUSHING PLAN TO ENGINEER FOR REVIEW. PROVIDE CHEMICAL TREATMENT FOR ALL PIPING SYSTEMS AFTER FLUSHING AND REFILLING THE SYSTEM.
15. COORDINATE THE EXACT MOUNTING SIZE AND FRAME TYPE OF DIFFUSERS, REGISTERS AND GRILLES WITH THE SUPPLIER TO MEET THE CEILING, WALL AND DUCT INSTALLATION REQUIREMENTS.
16. ADJUST LOCATION OF CEILING DIFFUSERS, REGISTERS AND GRILLES AS REQUIRED TO ACCOMMODATE FINAL CEILING GRID AND LIGHTING LOCATIONS.
17. PAINT PORTIONS OF DUCTWORK AND INSULATION THAT ARE EXPOSED TO VIEW BY THE INSTALLATION OF DIFFUSERS, REGISTERS, AND GRILLES IN CEILINGS OR WALLS FLAT BLACK. PORTIONS INCLUDE BOTH THE INTERIOR OF UNLINED DUCTWORK AND THE EXTERIOR OF DUCTWORK AND INSULATION.
18. DUCTWORK CROSSING FIRE RATED WALLS OR OTHER FIRE RATED ASSEMBLIES SHALL BE MINIMUM 26 GAUGE SHEET METAL.
19. PROVIDE FIRE OR FIRE/SMOKE DAMPERS, AS APPLICABLE, IN DUCTWORK AT CEILINGS AND WALLS AT LOCATIONS SHOWN ON THE PLANS. FIRE AND FIRE/SMOKE DAMPERS SHALL CONFORM TO NFPA AS APPLICABLE. COORDINATE SLEEVE LENGTH WITH REQUIREMENTS OF INSTALLED LOCATION.
20. PROVIDE WALL OR DUCT ACCESS PANELS OR DOORS FOR ACCESS TO FIRE AND FIRE/SMOKE DAMPERS. ACCESS PANEL OR DOOR SHALL BE MINIMUM SIZE OF 10" BY 10" AND SHALL BE INSTALLED WITHIN 12" OF DAMPER. PROVIDE A REMOVABLE DUCT SECTION WHERE DUCT SIZE IS TOO SMALL FOR A 10" BY 10" ACCESS DOOR.
21. LOCATE AND SET THERMOSTATS AND HUMIDISTATS AT LOCATIONS SHOWN ON PLANS. VERIFY EXACT LOCATIONS WITH ARCHITECT PRIOR TO INSTALLATION. INSTALL DEVICES WITH TOP OF DEVICE AT MAXIMUM 48" AFF TO MEET ADA REQUIREMENTS UNLESS NOTED OTHERWISE ON PLANS. PROVIDE INSULATED BACKING FOR THERMOSTATS MOUNTED ON EXTERIOR BUILDING WALLS. INSTALL WIRING IN CONDUIT PROVIDED BY ELECTRICAL CONTRACTOR. AT A MINIMUM, PROVIDE CONDUIT IN THE WALL FROM THE JUNCTION BOX TO 6" ABOVE THE CEILING.
22. COORDINATE THE LOCATION AND ELEVATION OF WALL-MOUNTED DEVICES WITH PRESENTATION BOARDS, DISPLAY CABINETS, SHELVES OR OTHER COMPONENTS SHOWN ON THE ARCHITECTURAL DRAWINGS THAT ARE TO BE INSTALLED UNDER OTHER DIVISIONS. CONTRACTOR WILL NOT BE REIMBURSED FOR RELOCATION OF WALL-MOUNTED DEVICES CAUSED BY A LACK OF COORDINATION.
23. PROVIDE A MANUAL BALANCING DAMPER IN EACH DUCT TAKEOFF FROM SUPPLY, RETURN, OUTDOOR AND EXHAUST AIR DUCTS.
24. PROVIDE A PREFABRICATED 45 DEGREE, HIGH EFFICIENCY, RECTANGULAR/ROUND BRANCH DUCT TAKEOFF FITTING FOR BRANCH DUCT CONNECTIONS AND TAKE-OFFS TO INDIVIDUAL DIFFUSERS, REGISTERS AND GRILLES. PROVIDE WITH INTEGRAL MANUAL BALANCING DAMPER AND LOCKING QUADRANT WHERE INDICATED ON PLANS.
25. BRANCH DUCTWORK TO AIR OUTLETS SHALL BE SAME SIZE AS OUTLET NECK SIZE UNLESS OTHERWISE NOTED.
26. REFER TO SPECIFICATIONS FOR DUCTWORK AND PIPING INSULATION REQUIREMENTS. DUCT SIZES ON MECHANICAL PLANS INDICATE CLEAR INSIDE AIRFLOW DIMENSIONS, INCREASE SHEET METAL SIZES ACCORDINGLY TO ACCOUNT FOR THICKNESS OF DUCT LINER.
27. FLEXIBLE DUCTWORK SHALL NOT EXCEED 5'-0" IN LENGTH AND SHALL BE INSTALLED AND SUPPORTED TO AVOID SHARP BENDS AND SAGGING. REFER TO SPECIFICATIONS FOR ADDITIONAL REQUIREMENTS.
28. RIGIDLY SUSPEND UNIT HEATER FROM STRUCTURE WITH SUPPORTING ANGLES AND ALL-THREAD HANGING RODS IN ACCORDANCE WITH MANUFACTURER'S RECOMMENDATIONS.
29. PROVIDE EQUIPMENT VENTS AND FLUES PER EQUIPMENT MANUFACTURERS RECOMMENDATIONS AND EQUIPMENT SPECIFICATIONS. KEEP PENETRATIONS THROUGH ROOF A MINIMUM OF 10'-0" FROM HVAC EQUIPMENT FRESH AIR INLETS AND 2'-0" FROM ROOF PARAPETS.
30. PROVIDE WALL MOUNTED LOUVERS AND DAMPERS WITH SUITABLE MOUNTING FRAME TO MATCH WALL CONSTRUCTION. COORDINATE WITH ARCHITECTURAL DRAWINGS.
31. PROVIDE A NEW SET OF AIR FILTERS IN UNITS PRIOR TO TESTING, ADJUSTING AND BALANCING AND BEFORE TURNING SYSTEM(S) OVER TO OWNER.

MECHANICAL SYMBOLS & LEGENDS

THIS IS A MASTER LEGEND, NOT ALL ABBREVIATIONS OR SYMBOLS ARE USED ON DRAWINGS.

HVAC SYMBOLS & LEGENDS

ALL DUCT DIMENSIONS SHOWN ON DRAWINGS ARE INSIDE CLEAR DIMENSIONS. REFER TO HVAC SPECIFICATIONS FOR DUCTWRAP AND LINER INFORMATION. FINAL DUCT DIMENSION SHALL ACCOUNT FOR TYPE & THICKNESS OF INSULATION (TYP).

SYMBOL	DESCRIPTION
	ROUND DIFFUSER/REGISTER ANNOTATION SD-1 (TYPE) 12"Ø / 500 (NECK SIZE) / (CFM)
	RECTANGULAR DIFFUSER/REGISTER ANNOTATION RG-1 (TYPE) 22x22" / 500 (NECK SIZE) / (CFM)
	MANUAL VOLUME/BALANCING DAMPER
	DUCT WITH ACOUSTIC LINING
	SQUARE TO ROUND DUCT TRANSITION
	HIGH EFFICIENCY TAKEOFF (45 DEGREES) RECTANGLE TO ROUND BRANCH FITTING WITH VOLUME DAMPER
	FLEXIBLE DUCT CONNECTOR AT EQUIPMENT
	ELBOW WITH TURNING VANES
	SUPPLY OR OUTSIDE AIR DUCT UP
	SUPPLY OR OUTSIDE AIR DUCT DOWN
	RETURN OR EXHAUST AIR DUCT UP
	RETURN OR EXHAUST AIR DUCT DOWN
	DUCT SMOKE DETECTOR
FD	FIRE DAMPER
SD	SMOKE DAMPER
FSD	COMBINATION FIRE/SMOKE DAMPER
VD	VOLUME/MANUAL DAMPER
MD	MOTORIZED DAMPER
BD	BACKDRAFT DAMPER

CONTROL DEVICES

THERMOSTATS (USER ADJUSTABLE) - TOP OF DEVICE 48" AFF
CONTROL DEVICES - TOP OF DEVICE 48" AFF

INSTALL ALL DEVICES AT ELEVATIONS SHOWN ABOVE UNLESS NOTES OTHERWISE IN DRAWINGS OR SPECIFICATIONS. ELEVATIONS ARE DIMENSIONED FROM AFF OR AFG TO TOP OF DEVICE. INSTALL ALL DEVICES IN COMPLIANCE WITH CURRENT ADA AND LOCAL REQUIREMENTS. REFER TO ARCHIECTURAL DRAWINGS FOR LOCATIONS & ELEVATIONS.

SYMBOL	DESCRIPTION
T	THERMOSTAT
H	HUMIDISTAT
TS	TEMPERATURE SENSOR
HS	HUMIDITY SENSOR
DP	DIFFERENTIAL PRESSURE SENSOR
SP	STATIC PRESSURE SENSOR
CO	CARBON MONOXIDE SENSOR
CO2	CARBON DIOXIDE SENSOR
FS	FLOW SWITCH
PS	PULL STATION (REFER TO KITCHEN DRAWINGS)

GENERAL ANNOTATIONS

	POINT OF CONNECTION (POC) - NEW ITEMS TO EXISTING ITEMS
	ACCESS PANEL (AP)
RTU-X	MECHANICAL EQUIPMENT. (CONTRACTOR FURNISHED & INSTALLED UNLESS NOTED OTHERWISE). REFER TO MECHANICAL SCHEDULES.
1	MECHANICAL PLAN KEYNOTE
1 / M0.00	DETAIL REFERENCE CALLOUT. UPPER VALUE = DETAIL NUMBER. LOWER VALUE = SHEET NUMBER
1 / M0.00	SECTION VIEW REFERENCE CALLOUT. UPPER VALUE = DETAIL NUMBER. LOWER VALUE = SHEET NUMBER

ABBREVIATIONS

ABBREVIATION	DESCRIPTION
AABC	AMERICAN AIR BALANCE COUNCIL
AFF	ABOVE FINISHED FLOOR
AHJ	AUTHORITY HAVING JURISDICTION
AHU	AIR HANDLING UNIT
AI	ANALOG INPUT
AO	ANALOG OUTPUT
AP	ACCESS PANEL
APD	AIR PRESSURE DROP
BAS	BUILDING AUTOMATION SYSTEM
BD	BACKDRAFT DAMPER
BFP	BACKFLOW PREVENTER DEVICE
BFF	BELOW FINISHED FLOOR
BHP	BRAKE HORSE POWER
BI	BINARY INPUT
BO	BINARY OUTPUT
BOD	BOTTOM OF DUCT
BTU/H	BRITISH THERMAL UNIT PER HOUR
CFM	CUBIC FEET PER MINUTE
CH	CHILLER
CLG	COOLING
CRAC	COMPUTER ROOM AIR CONDITIONING UNIT
CU	CONDENSING UNIT
CV	CONTROL VALVE
(D)	DEMOLISHED
dB	DECIBLES
DB	DRY BULB TEMPERATURE
DDC	DIRECT DIGITAL CONTROL
DI	DIGITAL INPUT
DIA	DIAMETER
DISC	DISCONNECT
DN	DOWN
DX	DIRECT EXPANSION
(E)	EXISTING
EA	EXHAUST AIR
EAT	ENTERING AIR TEMPERATURE
EER	ENERGY EFFICIENCY RATIO
EF	EXHAUST FAN
EFF	EFFICIENCY
ESP	EXTERNAL STATIC PRESSURE
ETR	EXISTING TO REMAIN
EWT	ENTERING WATER TEMPERATURE
°F	DEGREES FAHRENHEIT
FFA	FINISHED FLOOR ABOVE
FFB	FINISHED FLOOR BELOW
FF	FINISHED FLOOR
FPI	FINS PER INCH
FPM	FEET PER MINUTE
GA	GAGE OR GAUGE
GAL	GALLONS
GPM	GALLONS PER MINUTE
HD	HEAD
HP	HORSEPOWER
HSPF	HEATING SEASONAL PERFORMANCE FACTOR
HTG	HEATING
IBC	INTERNATIONAL BUILDING CODE
IMC	INTERNATIONAL MECHANICAL CODE
kW	KILOWATT
LAT	LEAVING AIR TEMPERATURE
LBS	POUNDS
LWT	LEAVING WATER TEMPERATURE
MAX	MAXIMUM
MBH	ONE THOUSAND BTUH
MCA	MINIMUM CIRCUIT AMPS
MFR	MANUFACTURER
MIN	MINIMUM
MOCP	MAXIMUM OVER CURRENT PROTECTION
N/A	NOT APPLICABLE
N/C	NORMALLY CLOSED
N/O	NORMALLY OPEN
NC	NOISE CRITERIA
NEBB	NATIONAL ENVIROMENTAL BALANCING BUREAU
NEC	NATIONAL ELECTRIC CODE
NFPA	NATIONAL FIRE PROTECTION ASSOCIATION
NIC	NOT IN CONTRACT
NOM	NOMINAL
NTS	NOT TO SCALE
OA	OUTSIDE AIR
OAT	OUTSIDE AIR TEMPERATURE
OBD	OPPOSED BLADE DAMPER
PD	PRESSURE DROP
PRV	PRESSURE REDUCING VALVE
PROVIDE	FURNISH & INSTALL
PSI	POUNDS PER SQUARE INCH
PSIA	POUNDS PER SQUARE INCH ABSOLUTE
PSID	POUNDS PER SQUARE INCH DIFFERENTIAL
PSIG	POUNDS PER SQUARE INCH GAUGE
QTY	QUANTITY
(R)	EXISTING TO BE RELOCATED
RA	RETURN AIR
RH	RELATIVE HUMIDITY
RPM	REVOLUTIONS PER MINUTE
SA	SUPPLY AIR
SD	SMOKE DAMPER
SD	SUPPLY DUCT
SEER	SEASONAL ENERGY EFFICIENCY RATIO
SF	SUPPLY FAN
SH	SENSIBLE HEAT CAPACITY
"SP	STATIC PRESSURE (INCHES OF)
SPECS	SPECIFICATIONS
SQFT	SQUARE FEET
SS	STAINLESS STEEL
T	TEMPERATURE
TAB	TEST AND BALANCE WORK AND REPORT
TBD	TO BE DETERMINED
TFA	TO FLOOR ABOVE
TFB	TO FLOOR BELOW
TH	TOTAL HEAT CAPACITY
TSP	TOTAL STATIC PRESSURE
TYP	TYPICAL
U/G	UNDERGROUND
UBC	UNIFORM BUILDING CODE
UMC	UNIFORM MECHANICAL CODE
UNO	UNLESS NOTED OTHERWISE
V/PH/HZ	VOLTAGE/PHASE/HERTZ
VAV	VARIABLE AIR VOLUME
VFD	VARIABLE FREQUENCY DRIVE
VRF	VARIABLE REFRIGERANT FLOW
VRV	VARIABLE REFRIGERANT VOLUME
W/	WITH
W/O	WITHOUT
WB	WET BULB TEMPERATURE
WG	WATER GAUGE
WPD	WATER PRESSURE DROP
XP	EXPLOSION PROOF

PIPING SYMBOLS & LEGENDS

SYMBOL	DESCRIPTION
	DIRECTION OF FLOW
	SHUTOFF VALVE (SO)
	BALANCING VALVE WITH PRESSURE PORTS (BLV)
	BUTTERFLY VALVE (BFV)
	CHECK VALVE (CHV)
	TRIPLE DUTY VALVE (TDV)
	BACKFLOW PREVENTOR (BP)
	PRESSURE REDUCING VALVE (PRV)
	STRAINER (STR)
	STRAINER WITH 3/4" HOSE END DRAIN VALVE
	2-WAY CONTROL VALVE
	3-WAY CONTROL VALVE
	REDUCER
	WATER HAMMER ARRESTOR
	UNION
	PRESSURE GAGE WITH GAUGE COCK
	THERMOMETER
	PIPING TEE DOWN
	PIPING TEE UP
	PIPING ELBOW UP
	PIPING ELBOW DOWN
	CAP
	FLEXIBLE COUPLING
	PUMP

PIPING LINETYPES

SYMBOL	DESCRIPTION
CD	CONDENSATE DRAIN (CD)
G	NATURAL GAS (G)
RL	REFRIGERANT LIQUID (RL)
RS	REFRIGERANT SUCTION (RS)
CWS	CHILLED WATER SUPPLY (CWS)
CWR	CHILLED WATER RETURN (CWR)
CS	CONDENSER WATER SUPPLY (CS)
CR	CONDENSER WATER RETURN (CR)
HWS	HEATING HOT WATER SUPPLY (HWS)
HWR	HEATING HOT WATER RETURN (HWR)

MECHANICAL SHEET LIST

SHEET NUMBER	SHEET NAME
M000	MECHANICAL SYMBOLS, ABBREVIATIONS, AND NOTES
M002	MECHANICAL SCHEDULES
M200	MECHANICAL FLOOR PLAN
M600	MECHANICAL DETAILS

Kimley»Horn

7900 RANCHARRAH PARKWAY
SUITE 100
RENO, NV 89511
PHONE: 775.787.7552

2023 ©

This document is an instrument of service prepared solely for Kimley-Horn's client and for a particular purpose. Any other use or reliance is without liability to Kimley-Horn.

SEALS

PRELIMINARY
FOR REVIEW ONLY
NOT FOR RECORDATION PURPOSES
Kimley»Horn
ENGINEER _____
PE NO. _____ DATE _____

WEST WENDOVER FIRE STATION #13

1121 N. GENE L. JONES WAY

CLIENT PROJECT INFO

NO:	DATE	DRAWING ISSUE DESCRIPTION

DESIGNED BY: AS
DRAWN BY: AS
CHECKED BY: MCM
SCALE: As indicated
DATE: 5/01/2023
PROJECT NO: 092767002
FILENAME:

MECHANICAL SYMBOLS, ABBREVIATIONS, AND NOTES

M000

5/2/2023 12:45:32 PM BIM 360://092767002-Wendover Fire Station/Wendover Fire Station FS MEP.rvt

OUTDOOR CONDENSING UNIT SCHEDULE

NOTES:
1. PROVIDE LOW AMBIENT CONTROL TO 0°F.
2. EQUIPMENT SIZED FOR SUMMER AMBIENT OF 105°F AND WINTER AMBIENT OF 7°F.
3. COORDINATE WITH THE MANUFACTURER THE HORIZONTAL AND VERTICAL REFRIGERANT PIPE ROUTING TO DETERMINE PIPE SIZES FOR THE REFRIGERANT PIPING. MANUFACTURER SHALL PROVIDE DETAILED REFRIGERANT PIPING DIAGRAMS INCLUDING DIMENSIONAL DATA FOR ALL REFRIGERANT PIPING DEVICES. THE MANUFACTURER SHALL SIZE AND LOCATETHE ASSOCIATED REFRIGERANT TRAPS BASED ON THE ACTUAL ROUTING AND PROVIDE OTHER APPURTENANCES TO PROVIDE A FULLY FUNCTIONAL AND OPERATIONAL SYSTEM. COORDINATE WITH THE MANUFACTURER LOCATIONS FOR ALL REFRIGERANT PIPING DEVICES TO MAINTAIN SERVICEABILITY AND ACCESSIBILITY.
4. PROVIDE LIQUID LINE FILTER DRYER AND SIGHT GLASS.
5. PROVIDE CONCRETE HOUSEKEEPING PAD, SEE STRUCTURAL DRAWINGS.
6. PROVIDE FACTORY MOUNTED DISCONNECT INSTALLED ON SERVICE SIDE OF UNIT.
7. PROVIDE CONDENSER COIL HAIL GUARDS.
8. SELECT EQUIPMENT FOR ELEVATION OF 4500 FEET ABOVE SEA LEVEL.

	COOLING		COOLING		ELECTRICAL							
MARK	TOTAL CAP (TON)	REFRIGERANT TYPE	SUMMER AMBIENT DB (°F)	SEER	VOLTAGE	PHASE	HZ	MCA	ASSOCIATED UNIT	MANUFACTURER	MODEL	NOTES
CU-1	3.0	R-410	97.0	14	208 V	3	60 Hz	14 A	CC-1, F-1	TBD	TBD	1-12
CU-2	3.0	R-410	97.0	14	208 V	3	60 Hz	14 A	CC-2, F-1	TBD	TBD	1-12
CU-3	1.0	R-410	97.0	22	208 V	1	60 Hz	10 A	FC-1	LG	LSU120HSVS	1-12

EXHAUST FAN SCHEDULE

NOTES:
1. PROVIDE WITH 6" TO 4" ROUND REDUCER.
2. PROVIDE WALL CAP WITH INTEGRAL BACKDRAFT DAMPER.
3. FAN TO OPERATE OFF ROOMS LIGHT SWITCH, SEE ELECTRICAL DRAWING.
4. FAN SHALL BE INTEGRATED TO GAS DETECTION SYSTEM TO ACTIVATE BASED ON CO AND NO2 DETECTION.
5. PROVIDE WITH BIRDSCREEN AND GRAVITY BACKDRAFT DAMPER.
6. FAN TO OPERATE CONTINUOUSLY, SEE ELECTRICAL FOR WALL SWITCH LOCATION.

				ELECTRICAL							
MARK	MOUNTING	AIRFLOW (CFM)	ESP (IN W.C.)	VOLTAGE	PHASE	HZ	MOTOR HP	WEIGHT	MANUFACTURER	MODEL	NOTES
EF-1	CEILING	60	0.10	115 V	1	60	0.016	12 lb	GREENHECK	SP-A90	1,2,3
EF-2	CEILING	60	0.10	115 V	1	60	0.016	12 lb	GREENHECK	SP-A90	1,2,3
EF-3	CEILING	60	0.10	115 V	1	60	0.016	12 lb	GREENHECK	SP-A90	1,2,3
EF-4	CEILING	60	0.10	115 V	1	60	0.016	12 lb	GREENHECK	SP-A90	1,2,3
EF-5	CEILING	100	0.10	115 V	1	60	0.016	12 lb	GREENHECK	SP-A90	1,2,3
EF-6	WALL	275	0.15	115 V	1	60	0.1	29 lb	GREENHECK	CUE-070-VG	3,5,6
EF-7	WALL	275	0.15	115 V	1	60	0.1	29 lb	GREENHECK	CUE-070-VG	3,5,6
EF-8	WALL	6850	0.00	115 V	1	60	2	142 lb	GREENHECK	CUBE-220	4,5

LOUVER SCHEDULE

NOTES:
1. PROVIDE 3/4" MESH ALUMINUM BIRD SCREEN.
2. PROVIDE STANDARD MILL FINISH.
3. FRAME TYPE SHALL MATCH WALL CONSTRUCTION. COORDINDATE WITH ARCHITECT.
4. PROVIDE WITH MANUFACTURER'S BACKDRAFT DAMPER.
5. PROVIDE WITH OPTIONAL WELDED CONSTRUCTION PER THE LARGE MISSLE IMPACT TEST (ASTM E1996/TAS 201) AND THE CYCLIC WIND-LOADING TEST (TAS 203). QUALIFIED FOR WIND-LOADS UP TO 200 PSF.
6. PROVIDE WITH GREENHECK MODEL BR-42 BACKDRAFT DAMPER.

		SIZE		AIRFLOW	MIN. FREE	MAX	MAX APD			
MARK	SERVICE	WIDTH	HEIGHT	(CFM)	AREA	VELOCITY	(IN W.C.)	MANUFACTURER	MODEL	NOTES
L-1	EMERGENCY INTAKE	5' - 0"	5' - 0"	6890	13.8 ft²	500 FPM	0.07	GREENHECK	ESD-435X	1-6
L-2	GENERAL INTAKE	2' - 0"	2' - 0"	632	1.3 ft²	500 FPM	0.07	GREENHECK	ESD-435X	1-6

ELECTRIC FURNACE SCHEDULE

NOTES:
1. PROVIDE WITH MATCHED CASE COOLING COIL.
2. PROVIDE WALL MOUNTED THERMOSTAT BY UNIT MANUFACTURER.

				HEATING		ELECTRICAL						
MARK	AIRFLOW (CFM)	UNIT TYPE	ESP (IN W.C.)	EAT (°F)	INPUT KW	VOLTAGE	PHASE	HZ	MOTOR HP	MANUFACTURER	MODEL	NOTES
F-1	1400	ELECTRIC FURNACE	0.50	70.0	17.6	208 V	3	60	0.5	TBD	TBD	1,2
F-2	1200	ELECTRIC FURNACE	0.50	70.0	17.6	208 V	3	60	0.5	TBD	TBD	1,2

GRILLES, REGISTERS, & DIFFUSERS SCHEDULE

NOTES:
1. NECK SIZE SHOWN ON DRAWINGS. PROVIDE BRANCH DUCT TO MATCH NECK SIZE UNLESS OTHERWISE SHOWN ON DRAWINGS.
2. FRAME TO MATCH CEILING/WALL CONSTRUCTION, COORDINATE WITH ARCHITECTURAL REFLECTED CEILING/WALL PLAN.

MARK	MATERIAL	FACE TYPE	FACE SIZE	MARGIN	FINISH	MAX AIRFLOW	MAX APD (IN W.C.)	MAX NC	MANUFACTURER	MODEL	NOTES
CD-1	STEEL	LOUCERED	24"X24"	LAY-IN	WHITE	1000 CFM	0.10	30	TITUS	TMS	1,2
CD-2	STEEL	LOUCERED	12"X12"	LAY-IN	WHITE	250 CFM	0.10	30	TITUS	TMS	1,2
RG-1	STEEL	PERFORATED	24"X24"	LAY-IN	WHITE	2500 CFM	0.10	30	TITUS	PAR	1,2
TG-1	STEEL	PERFORATED	18"X18"	LAY-IN	WHITE	244 CFM	0.10	30	TITUS	PAR	1,2

COOLING COIL UNIT

NOTES:
1. CONTRACTOR SHALL VERIFY WITH EQUIPMENT SUPPLIER EXACT ROUTING AND SIZE OF INSULATED REFRIGERANT PIPING. INSTALL PER MANUFACTURERS RECOMMENDATIONS.
2. SELECT EQUIPMENT FOR ELEVATION OF 4500 FEET ABOVE SEA LEVEL.
3. ELECTRICAL CONTRACTOR TO PROVIDE DISCONNECT SWITCH FOR EVAPORATOR SECTION AND CONDENSING SECTION.
4. PROVIDE WITH FACTORY CONDENSATE PUMP. SHIPPED LOOSE, FIELD INSTALLED BY PLUMBING CONTRACTOR.

		COOLING COIL						
MARK	UNIT TYPE	AIRFLOW (CFM)	TOTAL CAP (TON)	EAT DB (°F)	EAT WB (°F)	ASSOCIATED UNIT	MANUFACTURER	MODEL	NOTES
CC-1	COOLING COIL	1400	3.0	80.0	67.0	CU-1, F-1	TBD	TBD	1-4
CC-2	COOLING COIL	1200	3.0	80.0	67.0	CU-2, F-1	TBD	TBD	1-4

MINI SPLIT - INDOOR CONDENSING UNIT

NOTES:
1. PROVIDE AND INSTALL MANUFACTURER'S PROGRAMMABLE THERMOSTAT AND REFRIGERATION LINESET.
2. SET FAN SPEED TO MEDIUM.
3. MAX 23 FEET ELEVATION ABOVE CONDENSER.

		SUPPLY FAN	COOLING COIL					
MARK	UNIT TYPE	AIRFLOW (CFM)	TOTAL CAP (MBH)	ASSOCIATED UNIT	WEIGHT	MANUFACTURER	MODEL	NOTES
FC-1	WALL MOUNT FAN COIL	400	7.0	CU-3	21.00 lbf	TBD	TBD	1-3

INFRARED TUBE HEATER SCHEDULE

NOTES:
1. MOUNT 13 FEET ABOVE FINISHED FLOOR WITHOUT OBSTRUCTING AIRFLOW.
2. PROVIDE WITH WALL MOUNTED THERMOSTAT.
3. PROVIDE NECESSARY MOUNTING BRACKET AND ACCESSORIES FOR HORIZONTAL MOUNTING.

		HEATING (GAS)	ELECTRICAL		BURNER			
MARK	LOCATION	MBH	VOLTAGE	HZ	WEIGHT	MANUFACTURER	MODEL	NOTES
H-1	APPARATUS BAY	40.0	120 V	60	19.00 lbf	ROBERTS GORDON	CORAYVAC B-4	1-3

Kimley»Horn
7900 RANCHARRAH PARKWAY
SUITE 100
RENO, NV 89511
PHONE: 775.787.7552
2023 ©

This document is an instrument of service prepared solely for Kimley-Horn's client and for a particular purpose. Any other use or reliance is without liability to Kimley-Horn.

SEALS

PRELIMINARY
FOR REVIEW ONLY
NOT FOR RECORDATION PURPOSES
Kimley»Horn
ENGINEER _____
PE NO. _____ DATE _____

WEST WENDOVER FIRE STATION #13

1121 N. GENE L. JONES WAY

CLIENT PROJECT INFO

NO:	DATE	DRAWING ISSUE DESCRIPTION

DESIGNED BY: AS
DRAWN BY: AS
CHECKED BY: MCM
SCALE:
DATE: 5/01/2023
PROJECT NO: 092767002
FILENAME:

MECHANICAL SCHEDULES

M002

5/25/2023 12:45:54 PM BIM 360://092767002-Wendover Fire Station/Wendover FS M&P.rvt

MECHANICAL VENTILATION CALCULATION

BAY AREA:	9084 FT²
EXHAUST RATE PER 2020 FBC SECTION 404.1[A]:	0.75 CFM/FT²
REQUIRED VENTILATION:	6813 CFM
PROPOSED VENTILATION:	6850 CFM
MIN. CONTINUOUS VENTILATION:	.06 CFM/FT²
REQUIRED VENTILATION:	545 CFM
PROPOSED VENTILATION:	550 CFM

A: EXHAUST RATE APPLIES UPON DETECTION OF CO OR NO_2 IN THE AREA.

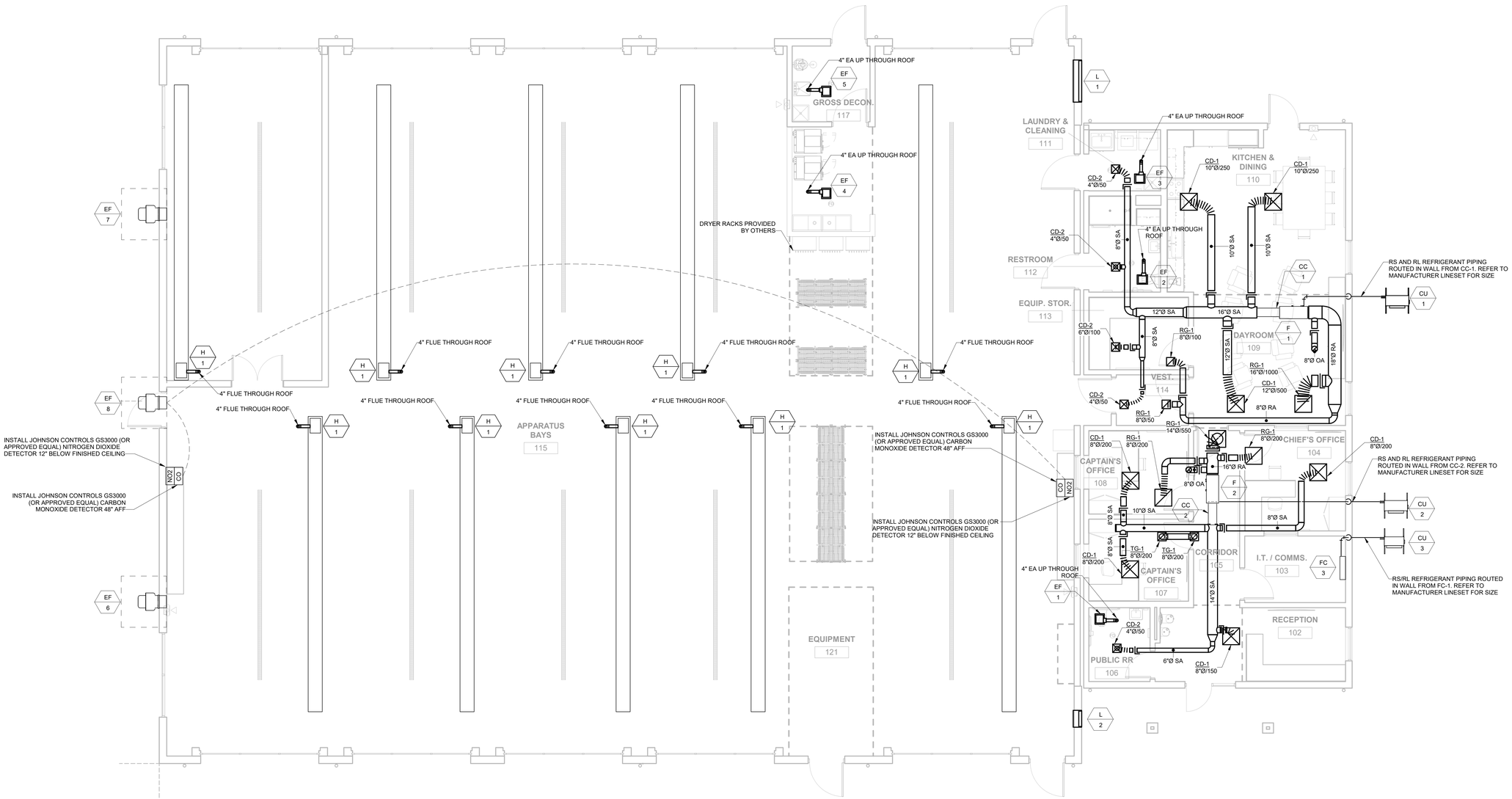

1 MECHANICAL FLOOR PLAN

3/16" = 1'-0"

Kimley»Horn

7900 RANCHARRAH PARKWAY
SUITE 100
RENO, NV 89511
PHONE: 775.787.7552

2023 ©

This document is an instrument of service prepared solely for Kimley-Horn's client and for a particular purpose. Any other use or reliance is without liability to Kimley-Horn.

SEALS

PRELIMINARY
FOR REVIEW ONLY
NOT FOR RECORDATION PURPOSES
Kimley»Horn
ENGINEER _____
PE NO. _____ DATE _____

WEST WENDOVER FIRE STATION #13

1121 N. GENE L. JONES WAY

CLIENT PROJECT INFO

NO:	DATE	DRAWING ISSUE DESCRIPTION

DESIGNED BY: AS
DRAWN BY: AS
CHECKED BY: MCM
SCALE: 3/16" = 1'-0"
DATE: 5/01/2023
PROJECT NO: 092767002
FILENAME:

MECHANICAL FLOOR PLAN

M200

5/2/2023 12:45:57 PM BIM 360://092767002-Wendover Fire Station/Wendover FS M&P.rvt

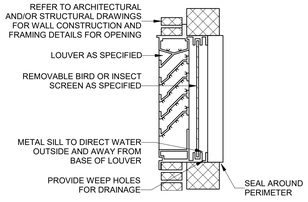

NOTES:

1. SEAL ALL JOINTS AND SEAMS OF PLENUM AND DUCT TO PROVIDE WATER TIGHT CONSTRUCTION. PROVIDE INSULATION FOR PLENUM AND DUCT PER SPECIFICATIONS.

1 LOUVER INSTALLATION DETAIL

N.T.S

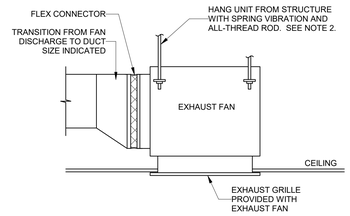

NOTES:

1. ARRANGEMENT SHOWN IS SCHEMATIC, ADJUST TO SUIT FIELD CONDITIONS AND MEET LOCAL CODE REQUIREMENTS.
2. FOR FANS 1 HP AND LESS, PROVIDE NEOPRENE RUBBER MOUNT HANGER. FOR FANS LARGER THAN 1 HP, PROVIDE SPRING VIBRATION ISOLATION HANGER.

2 CEILING MOUNTED FAN DETAIL

N.T.S

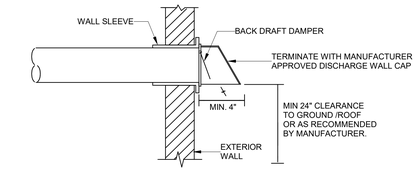

NOTES:

1. DRYER EXHAUST TERMINATIONS SHALL BE IN ACCORDANCE WITH THE APPLIANCE MANUFACTURER'S INSTALLATION INSTRUCTIONS.
2. DAMPERS OR ANY OTHER OBSTRUCTIONS ARE NOT PERMITTED IN DRYER VENT DUCT.
3. SCREENS SHALL NOT BE INSTALLED AT THE DUCT TERMINATION.
4. ALL DRYER EXHAUST DUCTWORK SHALL BE SMOOTH INSIDE WITH NO PROJECTIONS FROM SHEET METAL SCREWS OR OTHER OBSTRUCTIONS.

3 DRYER EXHAUST VENT DETAIL

N.T.S

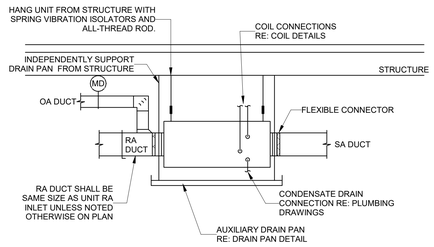

NOTES:

1. ARRANGEMENT SHOWN IS SCHEMATIC, ADJUST TO SUIT FIELD CONDITIONS AND MEET LOCAL CODE REQUIREMENTS.

4 HORIZONTAL FCU DETAIL

N.T.S

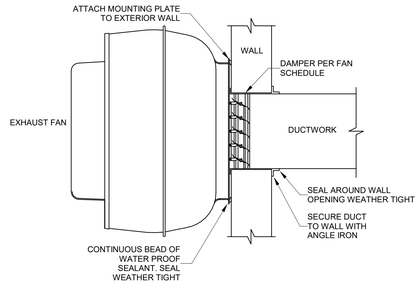

5 SIDEWALL CENTRIFUGAL EXHAUST FAN

N.T.S

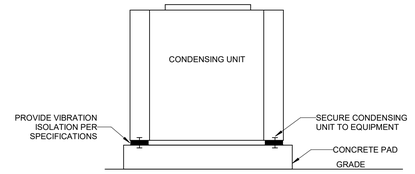

NOTES:

1. SUPPORT AND ANCHOR OUTDOOR UNITS IN COMPLIANCE WITH LOCAL SEISMIC AND WIND RESTRAINT REQUIREMENTS.
2. SEE MECHANICAL EQUIPMENT ANCHORS AND SUPPORT SPECIFICATIONS FOR ADDITIONAL REQUIREMENTS.

6 CONDENSING UNIT GROUND SUPPORT DETAIL

N.T.S

Kimley»Horn

7900 RANCHARRAH PARKWAY
SUITE 100
RENO, NV 89511
PHONE: 775.787.7552
2023 ©

This document is an instrument of service prepared solely for Kimley-Horn's client and for a particular purpose. Any other use or reliance is without liability to Kimley-Horn.

SEALS

PRELIMINARY
FOR REVIEW ONLY
NOT FOR RECORDATION PURPOSES
Kimley»Horn
ENGINEER _____
PE NO. _____ DATE _____

WEST WENDOVER FIRE STATION #13

1121 N. GENE L. JONES WAY

CLIENT PROJECT INFO

NO:	DATE	DRAWING ISSUE DESCRIPTION

DESIGNED BY: AS
DRAWN BY: AS
CHECKED BY: MCM
SCALE: 12" = 1'-0"
DATE: 5/01/2023
PROJECT NO: 092767002
FILENAME:

MECHANICAL DETAILS

M600

5/2/2023 12:45:57 PM BIM 360://092767002/Wendover Fire Station/Wendover FS MEP.rvt

PLUMBING GENERAL NOTES:

1. DRAWINGS ARE DIAGRAMMATIC ONLY AND REPRESENT THE GENERAL SCOPE OF THE WORK. REVIEW THE GENERAL NOTES, SPECIFICATIONS AND PLANS FOR ADDITIONAL REQUIREMENTS THAT MAY NOT BE SPECIFICALLY CALLED OUT IN THIS PORTION OF THE CONSTRUCTION DOCUMENTS. NOTIFY THE ARCHITECT AND ENGINEER ON RECORD OF ANY CONFLICTS OR DISCREPANCIES PRIOR TO SUBMISSION OF BID.
2. ALL WORK SHALL BE IN ACCORDANCE WITH THE 2018 INTERNATIONAL PLUMBING CODE (IPC), 2018 INTERNATIONAL ENERGY CONSERVATION CODE (IECC), 2018 INTERNATIONAL BUILDING CODE (IBS), 2018 INTERNATIONAL MECHANICAL CODE (IMC), NATIONAL FIRE PROTECTION ASSOCIATION (NFPA) STANDARDS, AND ALL OTHER APPLICABLE CODES, RULES, AND CITY OF WENDOVER AMENDMENTS.
3. GUARANTEE MATERIAL, EQUIPMENT, AND INSTALLATION FOR ONE YEAR FROM SUBSTANTIAL COMPLETION DATE. ALL DEFECTS SHALL BE CONTRACTORS RESPONSIBILITY.
4. PROVIDE A CONSTRUCTION RECORD SET OF "AS-BUILT" DOCUMENTS TO THE ARCHITECT AND ENGINEER ON RECORD REFLECTING ANY VARIANCES OF INSTALLED PIPING LOCATIONS OR EQUIPMENT CONTRARY TO THE CONSTRUCTION DOCUMENTS, REFER TO SPECIFICATIONS.
5. PROVIDE TO THE ARCHITECT AND ENGINEER ON RECORD A COPY OF INSPECTION REPORTS AND APPROVAL CERTIFICATES FROM LOCAL AND STATE INSPECTIONS, REFER TO SPECIFICATIONS.
6. INSTALLATION SHALL COMPLY WITH LEGALLY CONSTITUTED CODES AND THE REQUIREMENTS OF AUTHORITIES HAVING JURISDICTION.
7. PLANS AND SPECIFICATIONS GOVERN WHERE THEY EXCEED CODE REQUIREMENTS.
8. REFER TO ARCHITECTURAL PLANS FOR EXACT LOCATION AND MOUNTING HEIGHTS OF PLUMBING FIXTURES.
9. DO NOT SCALE FLOOR PLANS FOR EXACT HORIZONTAL LOCATION OF PIPE ROUTING.
10. INSTALL CONCEALED PIPING TIGHT TO THE STRUCTURE AND AS HIGH AS POSSIBLE. INSTALL EXPOSED PIPING TIGHT TO THE STRUCTURE, WALL OR CEILING AND AS HIGH AS POSSIBLE. COORDINATE WITH OTHER TRADES TO AVOID CONFLICTS.
11. INSTALL VALVES AND APPURTENANCES A MAXIMUM OF 24" ABOVE CEILING IN ACCESSIBLE LOCATION WITHIN 24" OF ACCESS DOORS OR ACCESSIBLE CEILING TILES. PROVIDE PIPE AND FITTINGS TO INSTALL VALVES AND APPURTENANCES AT REQUIRED HEIGHT AND WITHIN 24" OF ACCESS DOORS OR ACCESSIBLE CEILING TILES.
12. VALVES SHALL BE LINE SIZE UNLESS OTHERWISE NOTED.
13. PIPING IN FINISHED AREAS SHALL BE ROUTED CONCEALED; EXPOSED PIPING, WHERE NECESSARY, SHALL BE ROUTED AS HIGH AS POSSIBLE AND TIGHT TO WALLS.
14. VERIFY LOCATION AND DEPTH OF UTILITIES AT POINTS OF CONNECTION BEFORE START OF PIPING INSTALLATION.
15. COORDINATE ALL WORK WITH OTHER TRADES AND CONTRACTORS.
16. COORDINATE PIPING INSTALLATION WITH STRUCTURAL GRADE BEAMS, FOOTINGS, COLUMN PIERS, ETC. SLEEVE PIPING THROUGH GRADE BEAMS, FOOTING, ETC. WHERE REQUIRED AND AS NOTED ON PLANS. COORDINATE SLEEVE INSTALLATIONS WITH THE ARCHITECT, STRUCTURAL ENGINEER, STRUCTURAL CONTRACTOR AND GENERAL CONTRACTOR BEFORE CONCRETE IS INSTALLED.
17. CLEAN FAUCET AERATORS AND PIPE STRAINERS PRIOR TO TURNING BUILDING OVER TO THE OWNER.
18. COORDINATE PIPE ROUTING AWAY FROM ELECTRICAL PANELS. DO NOT INSTALL PIPING OVER ELECTRICAL PANELS.
19. PAINT ALL EXPOSED GAS AND WATER PIPING USING RUST INHIBITOR PAINT. PAINT AND COLOR SHALL BE COORDINATED WITH THE ARCHITECT AND / OR OWNER.
20. COORDINATE ALL ROOF PENETRATIONS WITH OTHER TRADES. MAINTAIN 10' MINIMUM CLEARANCE FROM ALL AIR INTAKES. MAINTAIN 2' CLEARANCE FROM ALL OTHER EQUIPMENT.
21. INSULATE PIPING ROUTED IN EXTERIOR BUILDING WALLS WITH MINIMUM 2" BATT INSULATION TO PREVENT FREEZING.
22. PROVIDE "HEAVY-DUTY" NO-HUB COUPLINGS ON SANITARY PIPING 3" AND LARGER. SEE DIVISION 22 SPECIFICATION SECTION "SANITARY DRAINAGE AND VENT AND PIPING SPECIALTIES" FOR MORE INFORMATION.
23. PROVIDE "HEAVY-DUTY" NO-HUB COUPLINGS ON STORM PIPING, INCLUDING CONNECTIONS TO ROOF DRAINS. SEE DIVISION 22 SPECIFICATION SECTION "STORM DRAINAGE PIPING AND SPECIALTIES" FOR MORE INFORMATION.
24. PROVIDE TRANSITION ADAPTER COUPLINGS FOR CONNECTION OF PVC DWV TO CAST IRON SANITARY, WASTE AND VENT PIPE AT SLAB ON GRADE. SEE DIVISION 22 SPECIFICATION SECTION "SANITARY DRAINAGE AND VENT PIPING AND SPECIALTIES" FOR MORE INFORMATION.
25. PROVIDE TRANSITION ADAPTER COUPLINGS FOR CONNECTION OF PVC DWV TO CAST IRON STORM PIPE AT SLAB ON GRADE. SEE DIVISION 22 SPECIFICATION SECTION "STORM DRAINAGE PIPING AND SPECIALTIES" FOR MORE INFORMATION.
26. FLOW CONTROL VALVES SHALL BE SIZE 1/2" AND SET AT 0.5 GPM UNLESS NOTED OTHERWISE.
27. WATER HAMMER ARRESTORS SHALL BE SIZE "A" UNLESS NOTED OTHERWISE.
28. PROVIDE CHECK VALVES IN HOT AND COLD WATER SUPPLIES FOR MOP SINK FAUCETS DOWNSTREAM OF SHUTOFF VALVES.
29. PROVIDE STACK SLEEVES AT PIPING PENETATIONS OF ELEVATED WATERPROOF FLOOR SLABS, REFER TO SPECIFICATIONS.
30. PROVIDE WALL PIPES AT PIPING PENETRATIONS OF ELEVATED WATERPROOF FLOOR SLABS, REFER TO SPECIFICATIONS.
31. PROVIDE DIELECTRIC UNIONS ON ALL CONNECTION BETWEEN DISSIMILAR METALS.
32. FLUSH AND DISINFECT ALL POTABLE WATER SYSTEMS AFTER FINAL INSTALLTION AND PRIOR TO BUILDING OCCUPANCY PER PLUMBING CODE.
33. ALL PENETRATIONS THROUGH RATED WALLS AND FLOORS SHALL BE SEALED WITH A MATERIAL CAPABLE OF PREVENTING THE PASSAGE OF FLAMES AND HOT GASES. MATERIALS SHALL BE UL LISTED AND COMPLY WITH PLUMBING CODE.
34. CALL FOR INSPECTION AND TEST FROM AUTHORITY HAVING JURISDICTION OF ALL WASTE PIPE, WATER PIPE, AND NATURAL GAS PIPE PRIOR TO BACKFILL AND COVER PER PLUMBING CODE.
35. PROVIDE THIRD PARTY TESTING AND CERTIFICATION OF ALL NATURAL GAS PIPE AND FITTINGS PER FUEL GAS CODE.
36. PROVIDE SIZE AND LENGTH OF HOT WATER FIXTURE SUPPLY PIPE FROM CIRCULATED HOT WATER BRANCH OR MAIN TO TERMINATION OF HOT WATER FIXTURE SUPPLY PIPE AT EACH FIXTURE PER 2015 INTERNATIONAL ENERGY CONSERVATION CODE, TABLE C404.3.1. FOR ½" HOT WATER FIXTURE SUPPLY PIPE SIZE TO INDIVIDUAL LAVATORIES, PROVIDE MAXIMUM LENGTH OF TWO FEET. FOR ½" HOT WATER FIXTURE SUPPLY PIPE SIZE TO INDIVIDUAL SINKS, PROVIDE MAXIMUM LENGTH OF 43 FEET. FOR 3/4" HOT WATER FIXTURE SUPPLY PIPE SIZE TO INDIVIDUAL SINKS, PROVIDE MAXIMUM LENGTH OF 21 FEET.

PLUMBING SYMBOLS & LEGENDS

THIS IS A MASTER LEGEND, NOT ALL ABBREVIATIONS OR SYMBOLS ARE USED ON DRAWINGS.

STANDARD MOUNTING ELEVATIONS

INSTALL PLUMBING FIXTURES AT ELEVATIONS IN DRAWINGS OR SPECIFICATIONS. ELEVATIONS ARE DIMENSIONED FROM AFF OR AFG. INSTALL ALL DEVICES IN COMPLIANCE WITH CURRENT ADA AND LOCAL REQUIREMENTS.

REFER TO ARCHIECTURAL DRAWINGS FOR FINAL LOCATIONS AND MOUNTING ELEVATIONS.

PIPING SYMBOLS & LEGENDS

SYMBOL	DESCRIPTION
	DIRECTION OF FLOW
	FLOOR SINK (FS) OR FLOOR DRAIN (FD), SIZE AND TYPE
	SHUTOFF VALVE (SOV)
	BALANCING VALVE WITH PRESSURE PORTS (BLV)
	CHECK VALVE (CHV)
	BACKFLOW PREVENTOR (BP)
	PRESSURE REDUCING VALVE (PRV)
	STRAINER (STR)
	STRAINER WITH 3/4" HOSE END DRAIN VALVE
	2-WAY CONTROL VALVE
	3-WAY CONTROL VALVE
	REDUCER
	WATER HAMMER ARRESTOR
	UNION
	PRESSURE GAGE WITH GAUGE COCK
	THERMOMETER
	PIPING TEE DOWN
	PIPING TEE UP
	PIPING ELBOW UP
	PIPING ELBOW DOWN
	CAP
	FLEXIBLE COUPLING
	PUMP

ABBREVIATIONS

ABBREVIATION	DESCRIPTION
ADA	AMERICANS WITH DISABILITIES ACT
AFF	ABOVE FINISHED FLOOR
AP	ACCESS PANEL
AV	ACID VENT
AW	ACID WASTE
BFP	BACKFLOW PREVENTER
BFF	BELOW FINISHED FLOOR
BHP	BRAKE HORSE POWER
BOP	BOTTOM OF PIPE
BTU/H	BRITISH THERMAL UNIT PER HOUR
CD	CONDENSATE DRAIN
CO	CLEANOUT
CP	CONDENSATE PYMP
CPVC	CHLORINATED POLYVINLY CHLORIDE
CU	COPPER
(D)	DEMOLISHED
DI	DUCTILE IRON
DIA	DIAMETER
DFU	DRAINAGE FIXTURE UNIT
DN	DOWN
(E)	EXISTING
ECO	EXTERIOR CLEANOUT
EFF	EFFICIENCY
EWC	ELECTRIC WATER COOLER
EWT	ENTERING WATER TEMPERATURE
°F	DEGREES FAHRENHEIT
FCO	FLOOR CLEANOUT
FD	FLOOR DRAIN
FPM	FEET PER MINUTE
GA	GAGE OR GAUGE
GAL	GALLONS
GI	GREASE INTERCEPTOR
GPF	GALLONS PER FLUSH
GPM	GALLONS PER MINUTE
HD	HEAD, HUB DRAIN
HP	HORSEPOWER
IBC	INTERNATIONAL BUILDING CODE
IE	INVERT ELEVATION
IPC	INTERNATIONAL PLUMBING CODE
KW	KILOWATT
L	LAVATORY OR SINK
LBS	POUNDS
LWT	LEAVING WATER TEMPERATURE
MAX	MAXIMUM
MBH	ONE THOUSAND BTUH
MCA	MINIMUM CIRCUIT AMPS
MH	MANHOLE
MIN	MINIMUM
MOCP	MAXIMUM OVER CURRENT PROTECTION
N/A	NOT APPLICABLE
N/C	NORMALLY CLOSED
N/O	NORMALLY OPEN
NEC	NATIONAL ELECTRIC CODE
NFPA	NATIONAL FIRE PROTECTION ASSOCIATION
NIC	NOT IN CONTRACT
NTS	NOT TO SCALE
OFCI	OWNER FURNISHED, CONTRACTOR INSTALLED
PD	PRESSURE DROP
PRV	PRESSURE REDUCING VALVE
PSI	POUNDS PER SQUARE INCH
PVC	POLYVINYL CHLORIDE
(R)	EXISTING TO BE RELOCATED
RD	ROOF DRAIN
RPM	REVOLUTIONS PER MINUTE
SK	SINK
SOI	SAND OIL INTERCEPTOR
SP	SUMP PUMP
SS	STAINLESS STEEL
TDH	TOTAL DYNAMIC HEAD
TFA	TO FLOOR ABOVE
TFB	TO FLOOR BELOW
UBC	UNIFORM BUILDING CODE
UL	UNDERWRITERS LABORATORIES, INC.
UMC	UNIFORM MECHANICAL CODE
UNO	UNLESS NOTED OTHERWISE
UPC	UNIFORM PLUMBING CODE
V	VENT
VFD	VARIABLE FREQUENCY DRIVE
VTR	VENT THROUGH ROOF
W/	WTH
W/O	WITHOUT
WC	WATER COLUMN
WCO	WALL CLEANOUT
WG	WATER GAUGE
WSFU	WATER SUPPLY FIXTURE UNIT
WVS	WASTE VENT STACK

PIPING LINETYPES

SYMBOL	DESCRIPTION
—CD—	CONDENSATE DRAIN PIPING (CD)
—CW—	COLD WATER (CW)
—HW—	DOMESTIC HOT WATER (HW)
—HWR—	DOMESTIC HOT WATER RETURN (HWC)
—G—	GAS - LOW PRESSURE (G) (7" WC AND BELOW)
—MPG—	GAS - MEDIUM PRESSURE (MPG) (2-5 PSI)
—GW—	GREASE WASTER (ABOVE GRADE/FLOOR) (GW)
—GW—	GREASE WASTE (BELOW GRADE/FLOOR) (GW)
—W—	WASTE PIPING (ABOVE GRADE/FLOOR) (W)
—W—	WASTE PIPING (BELOW GRADE/FLOOR) (W)
—ST—	STORM/ROOF DRAIN PIPING (BELOW GRADE/ FLOOR)
—ST—	STORM/ROOF DRAIN PIPING (ABOVE GRADE/FLOOR)
—STS—	SECONDARY STORM/ROOF DRAIN PIPING (BELOW GRADE/FLOOR)
—STS—	SECONDARY STORM/ROOF DRAIN PIPING (ABOVE GRADE/FLOOR)
—TW—	TEPID WATER
—TWC—	TEPID WATER CIRCULATION
—TP—	TRAP PRIMER WATER PIPING
—V—	VENT PIPING (ABOVE GRADE/FLOOR)
—VBG—	VENT BELOW GRADE PIPING

GENERAL ANNOTATIONS

	POINT OF CONNECTION (POC) - NEW ITEMS TO EXISTING ITEMS
	ACCESS PANEL (AP)
RTU X	MECHANICAL EQUIPMENT. (CONTRACTOR FURNISHED & INSTALLED UNLESS NOTED OTHERWISE). REFER TO MECHANICAL SCHEDULES.
1	PLUMBING PLAN KEYNOTE
1	PLUMBING EQUIPMENT. (CONTRACTOR FURNISHED & INSTALLED). REFER TO PLUMBING MATERIAL LIST.
1	PLUMBING EQUIPMENT. (OWNER FURNISHED, CONTRACTOR INSTALLED).
1 P0.00	DETAIL REFERENCE CALLOUT. UPPER VALUE = DETAIL NUMBER. LOWER VALUE = SHEET NUMBER
1 P0.00	SECTION VIEW REFERENCE CALLOUT. UPPER VALUE = DETAIL NUMBER. LOWER VALUE = SHEET NUMBER

PLUMBING SHEET LIST

SHEET NUMBER	SHEET NAME
P000	PLUMBING SYMBOLS, ABBREVIATIONS, AND NOTES
P002	PLUMBING SCHEDULES
P200	PLUMBING FLOOR PLAN

Kimley»Horn

7900 RANCHARRAH PARKWAY
SUITE 100
RENO, NV 89511
PHONE: 775.787.7552

2023 ©

This document is an instrument of service prepared solely for Kimley-Horn's client and for a particular purpose. Any other use or reliance is without liability to Kimley-Horn.

SEALS

PRELIMINARY
FOR REVIEW ONLY
NOT FOR RECORDATION PURPOSES
Kimley»Horn
ENGINEER _____
PE NO. _____ DATE _____

WEST WENDOVER FIRE STATION #13

1121 N. GENE L. JONES WAY

CLIENT PROJECT INFO

NO:	DATE	DRAWING ISSUE DESCRIPTION

DESIGNED BY: AS
DRAWN BY: AS
CHECKED BY: MCM
SCALE: As indicated
DATE: 5/01/2023
PROJECT NO: 092767002
FILENAME:

PLUMBING SYMBOLS, ABBREVIATIONS, AND NOTES

P000

5/2/2023 12:45:57 PM BIM 360://092767002-Wendover Fire Station/Wendover FS MEP.rvt

PLUMBING FIXTURE SCHEDULE

MARK	FIXTURE TYPE	DESCRIPTION	MANUFACTURER	MODEL	ROUGH-IN SIZE			
					W	V	CW	HW
EE-1	EMERGENCY EYE WASH	COMBINATION EMERGENCY SHOWER AND EYEWASH. PROVIDE WITH 11" STAINLESS STEEL BOWL, INTEGRAL 20 GPM FLOW CONTROL, MODEL SP157A SCALD BLEED VALVE, MODEL 92011E THERMOSTATIC MIXING VALVE, AND STAINLESS STEEL DUST COVER.	HAWS	8300	0"	0"	1 1/4"	1 1/4"
EWC-1	ELECTRIC WATER COOLER	BI-LEVEL, BARRIER-FREE, WALL MOUNTED REFRIGERATED WATER COOLER WITH SELF-CLOSING EASY-TOUCH CONTROLS REQUIRING LESS THAN 3 POUNDS OF FORCE TO OPERATE. UNIT SHALL PROVIDE 8.0 GPH OF 50°F WATER WITH 80°F ENTERING WATER AND 90°F AMBIENT. PROVIDE AND INSTALL MANUFACTURERS CANE SKIRT. PROVIDE COMPLETE WITH MOUNTING PLATE, STOP, SUPPLY, TRAP, CANE SKIRT, AND BOTTLE FILLER (MODEL NO. LZWSR).	ELKAY	LZSTL8WSLP - LHHS	2"	1 1/2"	1/2"	0"
FCO-1	FLOOR CLEANOUT	FLOOR CLEANOUT, REFER TO PLANS FOR SIZE. LOCATE IN ACCESSIBLE AREA. TUF-TOP NON-ADJUSTABLE CLEANOUT WITH DURA-COATED CAST IRON BODY, WITH GAS AND WATERTIGHT ABS TAPERED THREAD PLUG, AND ROUND SCORIATED CAST IRON HEAVY-DUTY SECURED COVER AND FRAME.	WATTS	CO-202-RC	2"	0"	0"	0"
FD-1	4" FLOOR DRAIN	CAST IRON BODY FLOOR DRAIN.	ZURN	Z415	4"	2"	0"	0"
HB-1	HOSE BIBB	EXPOSED HOSE BIBB, MILD CLIMATE, ANTI-SIPHON, CHROME PLATED.	WOODFORD	79	0"	0"	3/4"	0"
HB-2	HOSE BIBB	UNDER COVER WALL HYDRANT, ANIT SIPHON, CHROME PLATED. PROVIDE WITH INTEGRAL DOUBLE CHECK BACKFLOW PREVENTER AND LOOSE TEE KEY AND DOOR LOCK.	WOODFORD	68	0"	0"	3/4"	0"
L-1	LAVATORY	21"X20 1/4" SELF DRAINING DECK 4" CENTERS WALL MOUNTED LAVATORY, PROVIDE WITH AMERICAN STANDARD FAUCET MODEL 6053.204. FACUET TO BE 0.35 GPM, BATTERY OPERATED SENSOR WITH ESTIMATED LIFE CYCLES OF 480,000 AND OPTIONAL THERMOSTATIC MIXING VALVE MODEL 605TXMV1070. ADA COMPLIENT WHEN INSTALLED PER MANUFACTURERS ADA REQUIREMENTS.	AMERICAN STANDARD	DECORUM 9134004EC	1 1/2"	1 1/2"	1/2"	1/2"
MS-1	MOP SINK	FLOOR MOUNTED 24"X24"X10" DEEP MOP SINK. ONE PIECE MOLDED STRUCTURAL FIBERGLASS CONSTRUCTION WITH MARBELIZED WHITE FINISH. PROVIDE WITH FAUCET (MODEL 63.600A), 31" HOSE AND HOSE HOLDER (MODEL 830AA), MOP HANGER (889CC), BUMPER GUARDS, AND WALL GUARDS. PROVIDE MOP SINK WITH 3" INTEGRAL DRAIN WITH REMOVEABLE STAINLESS STEEL STRAINER.	FIAT	MSB-2424	2"	2"	1/2"	1/2"
MS-2	MOP SINK	FLOOR MOUNTED 23"X21-1/2 SINGLE BOWL LAUNDRY TUB WITH WHITE BAKED ENAMEL STEEL LEGS, STRAINER, AND PLUG. PROVIDE WITH CHICAGO FAUCETS 895 SERIES DECK MOUNTED SINK FAUCET.	FIAT	FL1	2"	2"	1/2"	1/2"
SK-1	SINK - SINGLE BOWL	20 GAUGE 304 STAINLESS STEEL SINGLE BOWL DROPIN SINK, 21-1/4" X 15-3/4" X 8" DEEP. BARRIER FREE ADA COMPLIANT, 27" MINIMUM CABINET SIZE. PROVIDE WITH 3-HOLE PUNCH CONFIGURATION ON 4" CENTERS. PROVIDE 1.5 GPM FAUCET, BRASS SWIVEL SPOUT (MODEL NO. 7074000.075). PROVIDE ASSE 1070 COMPLIANT THERMOSTATIC MIXING VALVE, TRUEBRO LAVGUARDS, 1-1/2" CHROME PLATED P-TRAP, GRID STRAINER, LEAD FREE QUARTER TURN VALVES, AND FLEXIBLE SUPPLY LINES.	AMERICAN STANDARD	20SB.8252283S.075	2"	1 1/2"	1/2"	1/2"
SK-2	SINK - DOUBLE BOWL	120 GAUGE STAINSS STEEL DOUBLE BOWL DROP-IN SINK, 33" X 22" X 8" DEEP. BARRIER FREE ADA COMPLIANT, 36" MINIMUM CABINET SIZE. PROVIDE WITH 3-HOLE PUNCH CONFIGURATION ON 4" CENTERS. PROVIDE 1.5 GPM FAUCET WITH 8" FIXED CENTERS, BRASS SWIVEL SPOUT (MODEL NO. 707400.075). PROVIDE ASSE 1070 COMPLIANT THERMOSTATIC MIXING VALVE, TRUEBRO LAVGUARDS, 1-1/2" CHROME PLATED P-TRAP, GRID STRAINER, LEAD FREE QUARTER TURN VALVES, AND FLEXIBLE SUPPLY LINES.	AMERICAN STANDARD	22DB.6332283S.075	2"	1 1/2"	1/2"	1/2"
SOI-1	SAND/OIL INTERCEPTOR	SAND-OIL INTERCEPTOR, 320 GALLON, 2 COMPARTMENT CONCRETE STRUCTURE. PROVIDE WITH #4 H20 TRAFFIC RATED, 26" X 26" AIR TIGHT DIAMOND FLOOR PLATE COVER, FABRICATED STEEL FRAME, AND SURFACE INLET GRATE 26" X 26" WITH FABRICATED STEEL FRAME.	JENSEN	JP320EE-SO	4"	2"	0"	0"
TD-1	TRENCH DRAINS	6-3/4" WIDE REVEAL TRENCH DRAIN SYSTEM WITH HEAVY-DUTY FRAME ASSEMBLY. DUCTILE IRON CLASS C GRATE.	ZURN	Z886-HD	4"	0"	0"	0"
TP-1	TRAP PRIMER	115V POWERED ELECTRIC TRAP PRIMER.	PRECISION PLUMBING PRODUCTS	MP-500-115V	0"	0"	1/2"	0"
UB-1	UTILITY WATER BOX	LOW LEAD SQUARE 1/4 TURN COPPER UTIITY BOX WITH OPTIONAL WATER HAMMER	OATEY COMPANY	39156	0"	0"	1/2"	0"
WC-1	WATER CLOSET - FLUSH VALVE	WALL MOUNTED WATER CLOSET, HIGH EFFICIENCY 1.28 GPF, ELONGATED BOWL, VITREOUS CHINA, TOP SPUD. PROVIDE WITH AMERICAN STANDARD 1.28 GPF BATTERY-POWERED SENSOR-OPERATED SELECTRONIC FLUSHOMETER VALVE (MODEL NO. 6065.121.002) AND HEAY DUTY OPEN FRONT SEAT (MODEL NO. 5901.100). PROVIDE WITH J. R. SMITH FLOOR MOUNTED CARRIER.	AMERICAN STANDARD	AFWALL FLOWISE 2257.101	4"	2"	1 1/2"	0"
WCO-1	WALL CLEANOUT	WALL CLEANOUT, REFER TO PLANS FOR SIZE. LOCATE IN ACCESSIBLE AREA. DURA-COATED CAST IRON BODY, WITH GAS AND WATERTIGHT ABS TAPERED THREAD PLUG, AND ROUND SMOOTH STAINLESS STEEL ACCESS COVER WITH SECURING SCREW.	WATTS	CO44	0"	0"	0"	0"

TANKLESS WATER HEATER SCHEDULE

MARK	LOCATION	EQUIPMENT TYPE	MIN GPM FOR TEMP RISE	TEMPERATURE RISE (°F)	ELECTRICAL							MANUFACTURER	MODEL	NOTES
					INPUT (W)	NUMBER OF ELEMENTS	ELEMENT WATTAGE (W)	VOLTAGE	PHASE	HZ	FLA			
WH-1	PUBLIC RR 106	TANKLESS	0.35	59 °F	3000.0	1	3000.0	208 V	1	60 Hz	15	EEMAX	SPEX3208T	

GAS WATER HEATER SCHEDULE

MARK	LOCATION	EQUIPMENT TYPE	RECOVERY CAP.	TEMPERATURE RISE (°F)	INPUT MBH	ELECTRICAL			MANUFACTURER	MODEL	NOTES
						VOLTAGE	PHASE	HZ			
WH-2	DECON	TANK TYPE - GAS	512 GPH	90 °F	399.0	208 V	1	60 Hz	STATE	SUF119 400	

Kimley»Horn

7900 RANCHARRAH PARKWAY
SUITE 100
RENO, NV 89511
PHONE: 775.787.7552

2023 ©

This document is an instrument of service prepared solely for Kimley-Horn's client and for a particular purpose. Any other use or reliance is without liability to Kimley-Horn.

SEALS

PRELIMINARY
FOR REVIEW ONLY
NOT FOR RECORDATION PURPOSES
Kimley»Horn
ENGINEER _____
PE NO. _____ DATE _____

WEST WENDOVER FIRE STATION #13

1121 N. GENE L. JONES WAY

CLIENT PROJECT INFO

NO:	DATE	DRAWING ISSUE DESCRIPTION

DESIGNED BY: AS
DRAWN BY: AS
CHECKED BY: MCM
SCALE:
DATE: 5/01/2023
PROJECT NO: 092767002
FILENAME:

PLUMBING SCHEDULES

P002

5/2/2023 12:45:57 PM BIM 360://092767002-Wendover Fire Station/Wendover FS MEP.rvt

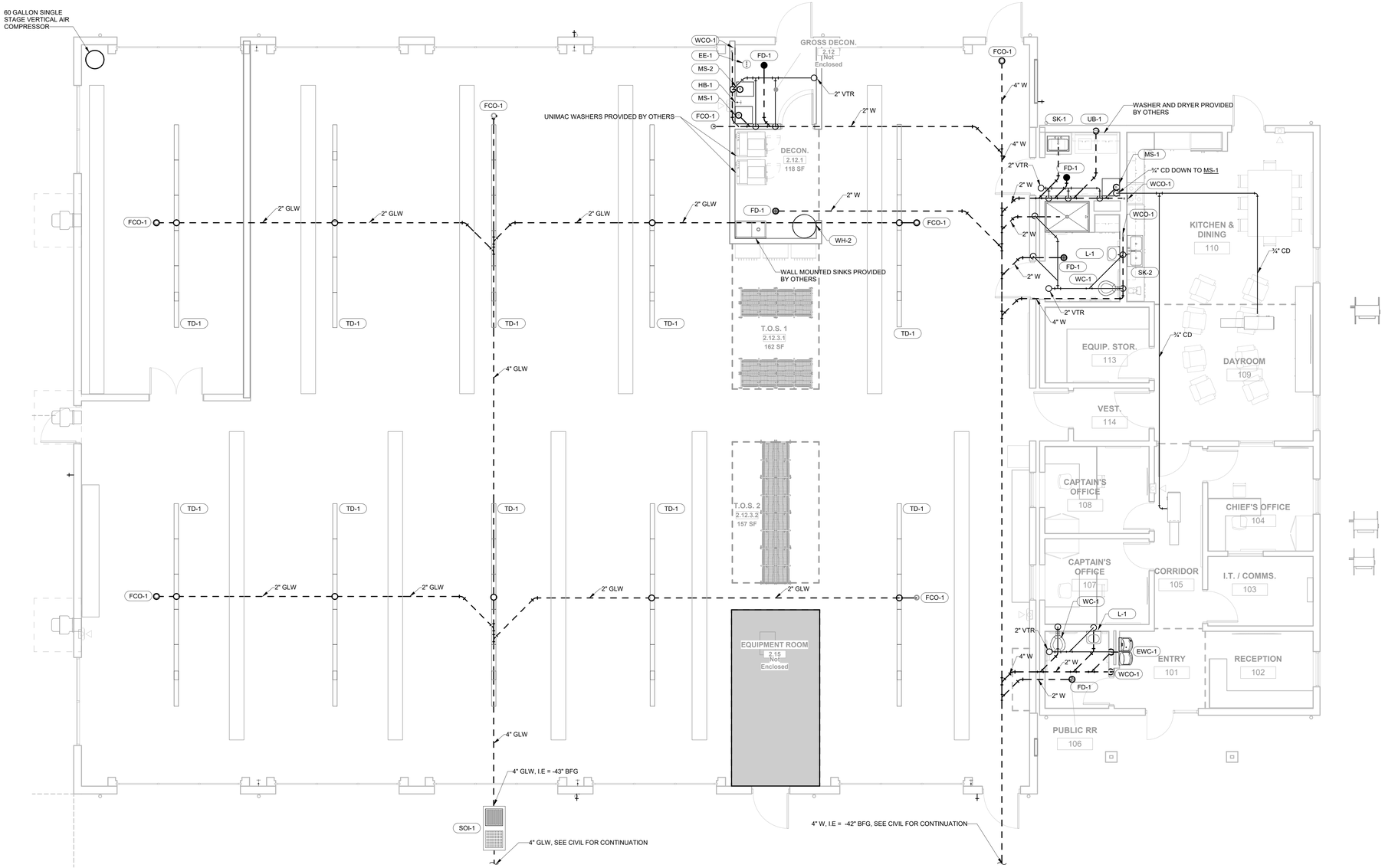

1 PLUMBING FLOOR PLAN - WASTE AND VENT

3/16" = 1'-0"

Kimley»Horn

7900 RANCHARRAH PARKWAY
SUITE 100
RENO, NV 89511
PHONE: 775.787.7552

2023 ©

This document is an instrument of service prepared solely for Kimley-Horn's client and for a particular purpose. Any other use or reliance is without liability to Kimley-Horn.

SEALS

PRELIMINARY
FOR REVIEW ONLY
NOT FOR RECORDATION PURPOSES
Kimley»Horn
ENGINEER _____
PE NO. _____ DATE _____

WEST WENDOVER FIRE STATION #13

1121 N. GENE L. JONES WAY

CLIENT PROJECT INFO

NO.	DATE	DRAWING ISSUE DESCRIPTION

DESIGNED BY: AS
DRAWN BY: AS
CHECKED BY: MCM
SCALE: 3/16" = 1'-0"
DATE: 5/01/2023
PROJECT NO: 092767002
FILENAME:

PLUMBING FLOOR PLAN - WASTE AND VENT

P200

5/2/2023 12:46:04 PM BIM 360://092767002/Wendover Fire Station/Wendover FS MEP.rvt

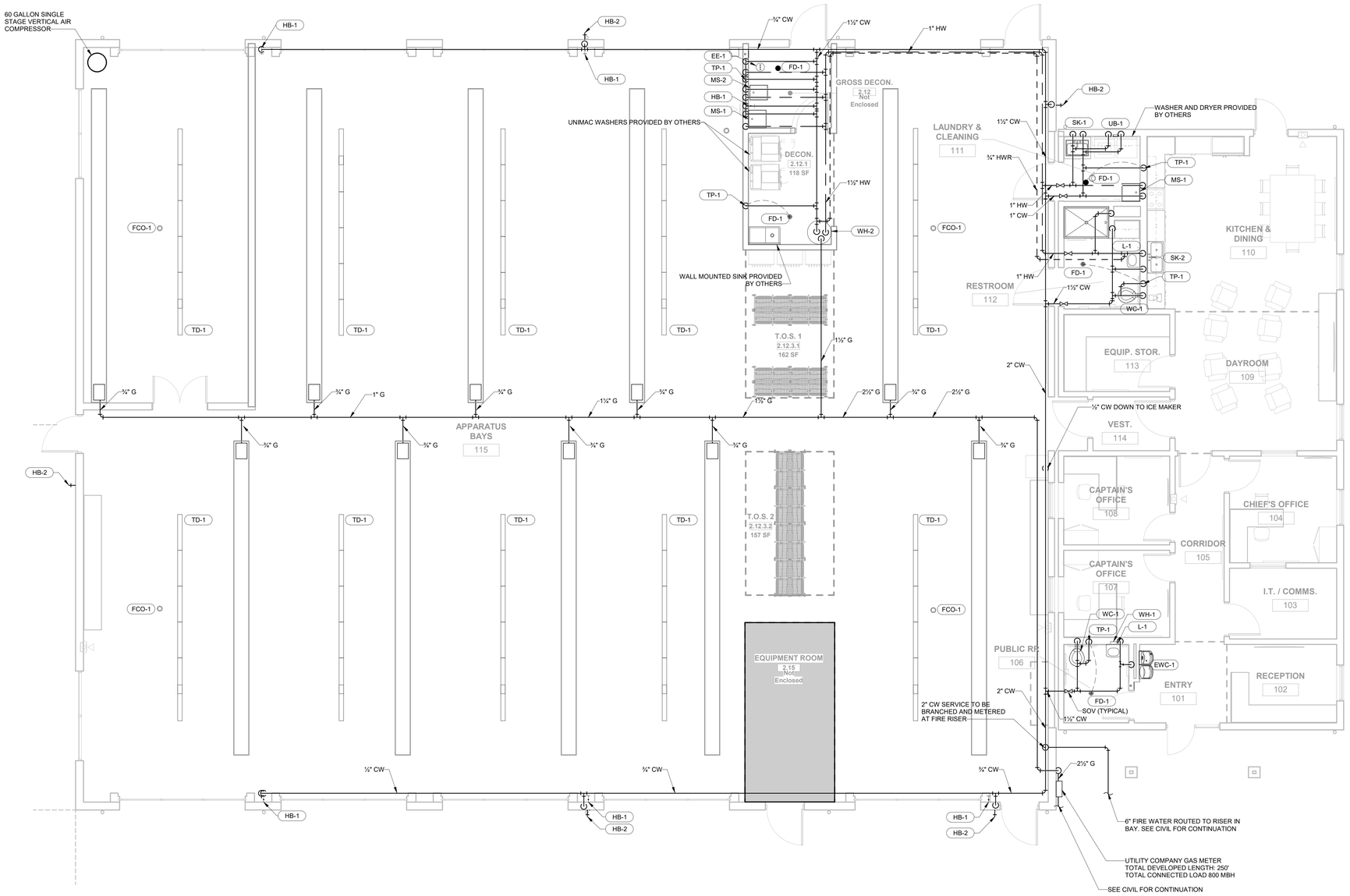

1 PLUMBING FLOOR PLAN - WATER

3/16" = 1'-0"

Kimley»Horn

7900 RANCHARRAH PARKWAY
SUITE 100
RENO, NV 89511
PHONE: 775.787.7552

2023 ©

This document is an instrument of service prepared solely for Kimley-Horn's client and for a particular purpose. Any other use or reliance is without liability to Kimley-Horn.

SEALS

PRELIMINARY
FOR REVIEW ONLY
NOT FOR RECORDATION PURPOSES
Kimley»Horn
ENGINEER _____
PE NO. _____ DATE _____

WEST WENDOVER FIRE STATION #13

1121 N. GENE L. JONES WAY

CLIENT PROJECT INFO

NO:	DATE	DRAWING ISSUE DESCRIPTION

DESIGNED BY: AS
DRAWN BY: AS
CHECKED BY: MCM
SCALE: 3/16" = 1'-0"
DATE: 5/01/2023
PROJECT NO: 092767002
FILENAME:

PLUMBING FLOOR PLAN - DOMESTIC

P201

5/2/2023 12:46:13 PM BIM 360://092767002-Wendover Fire Station/Wendover FS MEP.rvt

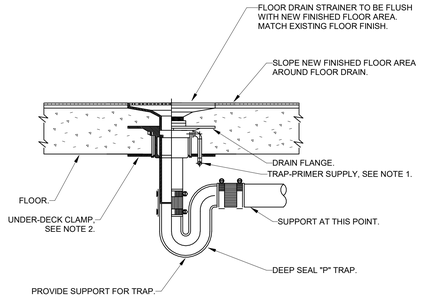

NOTES:

1. FOR TRAP-PRIMER REQUIREMENTS REF. PLAN DWG'S AND SPECIFICATIONS.
2. PROVIDE UNDER DECK CLAMP ON THIS SLAB INSTALLATIONS OF 5" OR LESS. SECURE CLAMP TO DRAIN, REF. SPECIFICATIONS.
3. NO-HUB FOR ABOVE GRADE INSTALLATION.

1 FLOOR DRAIN
N.T.S

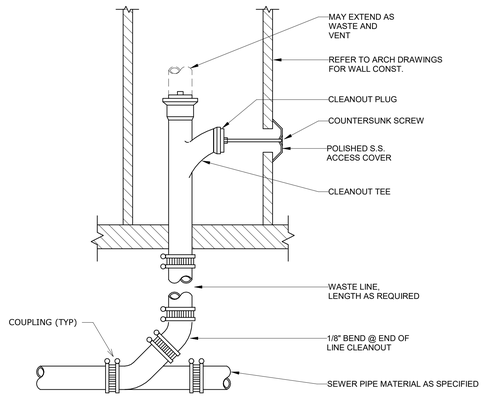

2 WALL CLEANOUT
N.T.S

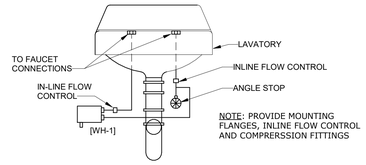

3 LAVATORY/WATER HEATER CONNECTION
N.T.S

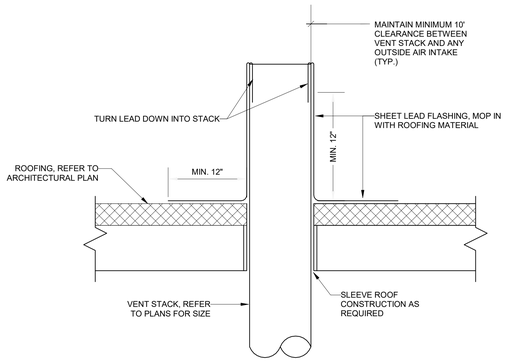

4 VENT THROUGH ROOF
N.T.S

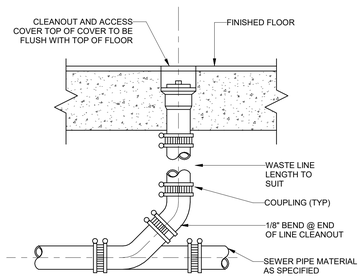

5 FLOOR CLEANOUT
N.T.S

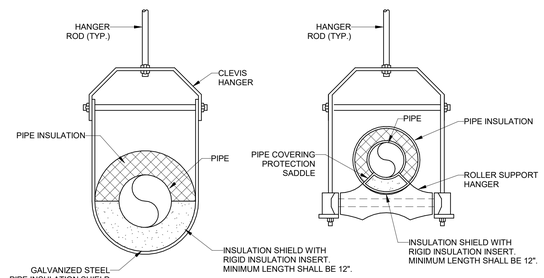

NOTES:

1. USE CLEVIS HANGER FOR 1/2" UP TO 4" .
2. USE ROLL SUPPORT HANGER FOR 6" TO 8".
3. PIPE 10" AND LARGER SHALL HAVE ROLLER. SUPPORT HANGER WITH DUAL RODS. FASTEN TO TOP CHORD OF STRUCTURAL ELEMENTS.

6 PIPE HANGER FOR INSULATED PIPE
N.T.S

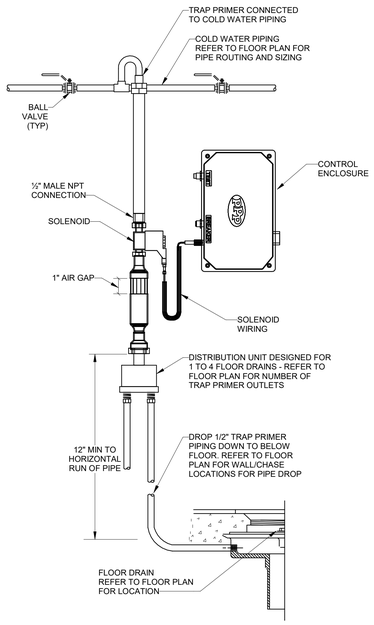

7 POWERED TRAP PRIMER DETAIL
N.T.S

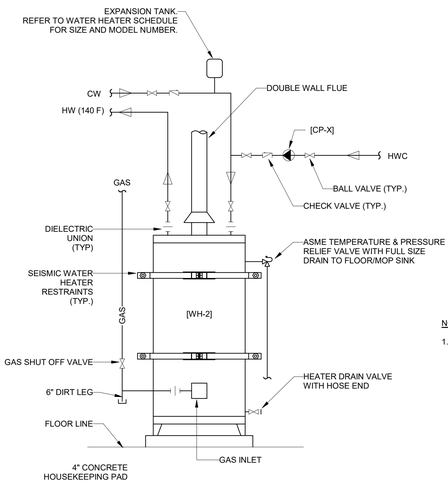

NOTES:

1. WATER HEATER STRAPPING SHALL BE AT POINTS WITHIN THE UPPER ONE-THIRD AND LOWER ONE-THIRD (1/3) OF ITS VERTICAL DIMENSIONS. A MINIMUM (1/3) DISTANCE OF FOUR (4) INCHES SHALL BE MAINTAINED ABOVE CONTROLS WITH THE STRAPPING.

8 GAS FIRED WATER HEATER WITH CIRCULATION PUMP
N.T.S

Kimley»Horn

7900 RANCHARRAH PARKWAY
SUITE 100
RENO, NV 89511
PHONE: 775.787.7552
2023 ©

This document is an instrument of service prepared solely for Kimley-Horn's client and for a particular purpose. Any other use or reliance is without liability to Kimley-Horn.

SEALS

PRELIMINARY
FOR REVIEW ONLY
NOT FOR RECORDATION PURPOSES
Kimley»Horn
ENGINEER _____
PE NO. _____ DATE _____

WEST WENDOVER FIRE STATION #13

1121 N. GENE L. JONES WAY

CLIENT PROJECT INFO

NO:	DATE	DRAWING ISSUE DESCRIPTION

DESIGNED BY: AS
DRAWN BY: AS
CHECKED BY: MCM
SCALE: 12" = 1'-0"
DATE: 5/01/2023
PROJECT NO: 092767002
FILENAME: _____

PLUMBING DETAILS

P600

5/2/2023 12:46:12 PM BIM 360://092767002-Wendover Fire Station/Wendover FS MEP.rvt

ELECTRICAL SYMBOLS

CONDUIT AND RACEWAY		MOUNTING (UON)
	CONDUIT RUN IN OR ON CEILING OR WALL.	NA
	CONDUIT RUN IN FLOOR, UNDER FLOOR, OR UNDERGROUND.	NA
	MARKS INDICATE QTY OF CONDUCTORS IN CONDUIT EXCLUDING GROUND. NO MARKS INDICATE (2) CONDUCTORS. ADD GROUND PER NEC FOR EMT & NON-METALLIC CONDUIT.	NA
	LONG MARK INDICATES GROUND FOR ISOLATED GROUNDING SYSTEM. SIZE PER NEC.	NA
	BRANCH CIRCUIT (DIAGRAMMATIC)	NA
LA-1	HOMERUN INDICATING PANEL AND CIRCUIT NUMBER.	NA
LA-[1,3,5]	HOMERUN WITH CIRCUIT NUMBER IN BRACKETS INDICATING MULTI-PHASE LOAD.	NA
ON HA-1	"ON" INDICATES CIRCUITING SPLIT AT DIFFERENT LOCATIONS	NA
	CONDUIT DOWN.	NA
	CONDUIT UP.	NA
	CONDUIT STUB AND CAP.	NA
POWER DEVICES		MOUNTING (UON)
	DUPLEX CONVENIENCE OUTLET, +18" AFF (TYPICAL).	W, +18" AFF
	DUPLEX CONVENIENCE OUTLET, COUNTER HEIGHT +48" AFF (TYPICAL).	W, FVMH
	CONVENIENCE OUTLET W/ GFCI PROTECTION.	W, +18" AFF
WP	CONVENIENCE OUTLET W/ GFCI PROTECTION & WEATHER PROOF-IN-USE COVER.	W, +18" AFF
IG	DUPLEX CONVENIENCE OUTLET W/ DEDICATED CIRCUIT & ISOLATED GROUND.	W, +18" AFF
MON	DUPLEX CONVENIENCE OUTLET FOR MONITOR. COORDINATE WITH ARCH/OWNER.	W, +60" AFF
USB	DUPLEX CONVENIENCE OUTLET WITH INTEGRAL USB CHARGING PORTS.	W, +18" AFF
DF	DUPLEX CONVENIENCE OUTLET FOR DRINKING FOUNTAIN. COORDINATE WITH MECH.	W, +30" AFF
REF	DUPLEX CONVENIENCE OUTLET W/ DEDICATED CIRCUIT FOR REFRIGERATOR.	W, +42" AFF
DISP	DUPLEX CONVENIENCE OUTLET W/ DEDICATED CIRCUIT FOR WASTE DISPOSAL.	W, +18" AFF
	DOUBLE DUPLEX CONVENIENCE OUTLET.	W, +18" AFF
	DUPLEX CONVENIENCE OUTLET, CEILING MOUNTED, FVMH.	C, FVMH
	QUAD RECEPTACLE IN FLOOR BOX.	FL
	DUPLEX RECEPTACLE IN FLOOR BOX.	FL
	SPECIAL PURPOSE OUTLET, NEMA CONFIGURATION AND VOLTAGE AS NOTED.	W, FVMH
USE	JUNCTION BOX, SPECIFIC USE AS NOTED.	W, FVMH
TELECOMMUNICATION DEVICES		MOUNTING (UON)
#	DATA OUTLET (SINGLE DATA OUTLET UNLESS OTHERWISE NOTED ON DRAWINGS.)	W
	TELEPHONE OUTLET	W
	WIRELESS ACCESS POINT (WAP)	C
FIRE ALARM		MOUNTING (UON)
	SMOKE DETECTOR.	C
D	DUCT SMOKE DETECTOR.	FVM
CO	SMOKE/CO DETECTOR.	FVM
	HEAT DETECTOR.	C
FS	FLOW SWITCH.	W
TS	TAMPER SWITCH.	W
RM	RELAY MODULE.	FVM
MM	MONITOR MODULE	W
CO	CARBON MONOXIDE DETECTOR.	W
	FIRE STROBE, CEILING MOUNTED.	C
	FIRE HORN STROBE, CEILING MOUNTED.	C
	FIRE LOUDSPEAKER, CEILING MOUNTED.	C
	FIRE STROBE, WALL MOUNTED AT +84" AFF.	W
	FIRE HORN STROBE, WALL MOUNTED AT +84" AFF.	W
	FIRE HORN STROBE, WALL MOUNTED.	C
	FIRE HORN STROBE, WALL MOUNTED.	C
	FIRE HORN STROBE, WALL MOUNTED.	C
WALL	FIRE ALARM CONTROL PANEL, SURFACE MOUNTED.	W

ELECTRICAL SYMBOLS

LIGHTING (REFER TO LIGHTING FIXTURE SCHEDULE FOR DETAILS)		MOUNTING (UON)
L#	LIGHTING FIXTURE TAG, INDICATING FIXTURE ID.	
EM	HALF SHADING AND/OR 'EM' TAG INDICATES FIXTURE W/ 90 MIN. EMEGENCY BACKUP.	W
	RECESSED VOLUMETRIC TROFFER, 1'X4', 2'X2', 2'X4'	C
	STRIP LIGHT FIXTURE.	C
	LINEAR LIGHTING FIXTURE.	C, W, FL
	RECESSED SQUARE DOWNLIGHT FIXTURE.	C
	RECESSED AND/OR SEMI-RECESSED ROUND DOWNLIGHT FIXTURE.	C
	TRACK AND TRACK LIGHT FIXTURE.	C, W
WALL	VANITY FIXTURE.	W
	EXIT SIGN, SINGLE FACE. ARROWS INDICATE PATH OF EGRESS. REFER TO PLANS FOR MOUNTING. ON UNSWITCHED LEG ON CIRCUIT.	FVM
	EXIT SIGN, DOUBLE FACE. ARROWS INDICATE PATH OF EGRESS. REFER TO PLANS FOR MOUNTING. ON UNSWITCHED LEG ON CIRCUIT.	FVM
LIGHTING CONTROLS		MOUNTING (UON)
S	LINE VOLTAGE LIGHT SWITCH, SINGLE POLE, +48" AFF.	W, +48" AFF
S_3	THREE-WAY SWITCH, +48" AFF.	W, +48" AFF
S_4	FOUR-WAY SWITCH, +48" AFF.	W, +48" AFF
S_D	LINE VOLTAGE DIMMER SWITCH, +48" AFF.	W, +48" AFF
S_K	KEYED SWITCH, +48" AFF.	W, +48" AFF
S_L	LIGHT SWITCH, SINGLE POLE, LIGHTED HANDLE, +48" AFF.	W, +48" AFF
S_O	MOMENTARY OVERRIDE SWITCH, +48" AFF.	W, +48" AFF
S_{LV}	LOW VOLTAGE DIMMING SWITCH, +48" AFF.	W, +48" AFF
S_{OS}	LINE VOLTAGE DIMMING SWITCH, OCCUPANCY SENSOR +48" AFF.	W, +48" AFF
S_T	DIGITAL TIME SWITCH, +48" AFF.	W, +48" AFF
S_0	MOMENTARY CONTACT SWITCH, +48" AFF.	W, +48" AFF
OS	OCCUPANCY SENSOR, DUAL TECHNOLOGY.	C
PC	PHOTOELECTRIC SENSOR.	C
HM	CONTROL ETHERNET GATEWAY HUB. REFER TO LIGHTING CONTROLS RISER DIAGRAM.	FVM
PP	CONTROL POWER PACK. REFER TO LIGHTING CONTROLS RISER DIAGRAM.	FVM
S#	CONTROL DEVICE. REFER TO LIGHTING CONTROLS RISER DIAGRAM.	W, +48" AFF
ONELINE		
M	CT METER.	
	BREAKER.	
LSI	BREAKER WITH GFI PROTECTION, "LSI" INDICATES TRIP SETTINGS LONG, SHORT, & INSTANTANEOUS.	
	GROUND.	
GND	GROUND BUSBAR.	
NEUT	NEUTRAL BUSBAR.	
	TRANSFORMER PAD MOUNTED.	
	ATS.	
	PANELBOARD.	
EQUIPMENT		MOUNTING (UON)
M	MOTOR RATED SWITCH.	FVM
	MOTOR RATED HAND-OFF-AUTO SWITCH.	FVM
	EMERGENCY POWER OFF SWITCH, MUSHROOM TYPE.	W, FVMH
	DISCONNECT, HEAVY DUTY, NON-FUSIBLE.	W
	DISCONNECT, HEAVY DUTY, FUSIBLE.	W, FVMH
	MAGNETIC MOTOR STARTER.	W
	COMBINATION MOTOR STARTER & DISCONNECT.	W, FVMH
	VARIABLE FREQUENCY DRIVE.	W
WALL	ELECTRICAL PANEL, SURFACE MOUNTED.	W
WALL	ELECTRICAL PANEL, FLUSH MOUNTED.	W
	TRANSFORMER.	FL
	DISTRIBUTION PANELBOARD.	W, FVMH
WALL	INVERTER.	W, FVMH
W1S-1 AC1 AC 1	EQUIPMENT CALLOUT.	
WALL	AUXILIARY SYSTEM CABINET.	W, FVMH

ELEC ABBREVIATION...

1P	ONE POLE
1PH	SINGLE PHASE
2/C	TWO-CONDUCTOR
2P	TWO POLE
3/C	THREE-CONDUCTOR
3P	THREE POLE
3PH	THREE PHASE
3W	THREE WIRE
4PDT	FOUR POLE DOUBLE THROW
4PST	FOUR POLE SINGLE THROW
4W	FOUR WIRE
A/C	AIR CONDITIONIG
AC	ALTERNATING CURRENT
ACS	ACCESS CONTROL SYSTEM
ADA	AMERICANS WITH DISABILITIES ACT
ADJ	ADJACENT
AFC	AVAILABLE FAULT CURRENT
AFF	ABOVE FINISHED FLOOR / GRADE
AIC	AMPERE INTERRUPTING CAPACITY
AL	ALUMINUM
ALCP	AREA LIGHT CONTACTOR PANEL
ALT	ALTERNATE
AMP	AMPERE
APPROX.	APPROXIMATE / APPROXIMATELY
AR	AS REQUIRED
ARCH	ARCHITECTURAL / ARCHITECT
ATS	AUTOMATIC TRANSFER SWITCH
AWG	AMERICAN WIRE GAUGE
BB	BUCK BOOST
BFB	BACK FEED BREAKER
BLDG	BUILDING
BRKR	BREAKER
BTU	BRITISH THERMAL UNIT
C	CEILING
CATV	COMMUNITY ANTENNA TELEVISION
CB	CIRCUIT BREAKER
CFBA	CUSTOM COLOR / FINISH SELECTED BY ARCHITECT
CFCI	CONTRACTOR FURNISHED CONTRACTOR INSTALLED
CFOI	CONTRACTOR FURNISHED OWNER INSTALLED
CKT	CIRCUIT
CL	CENTERLINE
CLG	CEILING
CO	CONVENIENCE OUTLET, RECEPTACLE
CU	COPPER
DA	DAMPER ACTUATOR
dB	DECIBLE, UNIT OF SOUND LEVEL
DEMO	DEMOLITION
DEPT	DEPARTMENT
DF	DRINKING FOUNTAIN
DIA	DIAMETER
DIM	DIMENSION
DISC	DISCONNECT
DN	DOWN
DPDT	DOUBLE POLE DOUBLE THROW
DWG	DRAWINGS
E	EAST
EA	EACH
EC	EMPTY CONDUIT WITH PULL WIRE
EJ	EXPANSION JOINT
ELEC	ELECTRICAL
ELEV	ELEVATOR
EM	EMERGENCY
EMB	EXTERNAL MAINTENANCE BYPASS
EMT	ELECTRICAL METALLIC CONDUIT
ENT	ELECTRICAL NONMETALLIC CONDUIT
EPO	EMERGENCY POWER OFF
EQUIP	EQUIPMENT

ELEC ABBREVIATION...

EXIST.	EXISTING
FA	FIRE ALARM
FAA	FIRE ALARM ANNUCIATOR
FACP	FIRE ALARM CONTROL PANEL
FBO	FURNISHED BY OTHERS
FLA	FULL LOAD AMPERES
FMC	FLEXIBLE METAL CONDUIT
FPEN	FUSE PER EQUIPMENT NAMEPLATE
FSD	FIRE SMOKE DAMPER
FVM	FIELD VERIFY MOUNTING
FVMH	FIELD VERIFY MOUNTING HEIGHT
FVNR	FULL VOLTAGE NON-REVERSING
FVR	FULL VOLTAGE REVERSING
G	GROUND
GALV	GALVANIZED
GEC	GROUNDING ELECTRODE CONDUCTOR
GEN	GENERATOR
GFCI	GROUND FAULT CIRCUIT INTERRUPTER
GFP	GROUND FAULT PROTECTION
GND	GROUND
HD	HEAVY DUTY
HID	HIGH INTENSITY DISCHARGE
HOA	HAND-OFF-AUTOMATIC
HP	HORSEPOWER
HPS	HIGH-PRESSURE SODIUM
HV	HIGH VOLTAGE
HVAC	HEATING, VENTILATION & AIR CONDITIONING
Hz	HERTZ, UNIT OF FREQUENCY
I/O	INPUT / OUTPUT
IG	ISOLATED GROUND
IMC	INTERMEDIATE METAL CONDUIT
IN/IS	INSULATED / ISOLATED
IR	INFRARED
KV	KILOVOLT
KVA	KILOVOLT AMPERE
KVAR	KILOVOLT AMPERE REACTIVE
KW	KILOWATT
KWH	KILOWATT HOUR
LED	LIGHT EMITTING DIODE
LFNC	LIQUID TIGHT FLEXIBLE NONMETALLIC CONDUIT
LPS	LOW-PRESSURE SODIUM
LRA	LOCKED ROTOR AMPERES
LTG	LIGHTING
LV	LOW VOLTAGE
MAX	MAXIMUM
MBJ	MAIN BONDING JUMPER
MC	METAL CLAD
MCA	MINIMUM CIRCUIT AMPERES
MCB	MAIN CIRCUIT BREAKER
MCC	MOTOR CONTROL CENTER
MECH	MECHANICAL
MFR	MANUFACTURER
MH	MAN HOLE
MIN	MINIMUM
MISC	MISCELLANEOUS
MLO	MAIN LUGS ONLY
MOCP	MAXIMUM OVER-CURRENT PROTECTION
MON	MONITOR
N	NORTH
NA	NOT APPLICABLE
NC	NORMALLY CLOSED
NEC	NATIONAL ELECTRIC CODE
NEMA	NATIONAL ELECTRIC MANUFACTURERS ASSOCIATION
NFC	NATIONAL FIRE CODE
NFPA	NATIONAL FIRE PROTECTION ASSOCIATION
NIC	NOT IN CONTRACT
NL	NIGHT LIGHT

ELEC ABBREVIATION...

NO	NORMALLY OPEN
NO.	NUMBER
NTS	NOT TO SCALE
OAE	OR APPROVED EQUAL
OC	ON CENTER
OCP	OVER-CURRENT PROTECTION
OFCI	OWNER FURNISHED CONTRACTOR INSTALLED
OFOI	OWNER FURNISHED OWNER INSTALLED
OHD	OVERHEAD DOOR
OL	OVERLOAD
PF	POWER FACTOR
PH	PHASE
PNL	PANEL
PROJ	PROJECTOR
PVC	POLYVINYL CHLORIDE
QTY	QUANTITY
R	RELOCATED DEVICE / EQUIPMENT
RAU	REMOTE ANNUNCIATOR UNIT
RCP	REFLECTED CEILING PLAN
REF	REFRIGERATOR
REV	REVISIONS / REVISED
RMC	RIGID METAL CONDUIT
RNC	RIGID NONMETALLIC CONDUIT
RPM	REVOLUTIONS PER MINUTE
RR	REMOVE & RELOCATE
S	SOUTH
S/N	SWITCH NEUTRAL
S/S	START / STOP
SCA	SHORT CIRCUIT AMPERES
SF	SQUARE FOOT / FEET
SFBA	STANDARD FINISH / COLOR BY ARCHITECT
SPD	SURGE PROTECTION DEVICE
SPDT	SINGLE POLE DOUBLE THROW
SPEC	SPECIFICATION
SPST	SINGLE POLE SINGLE THROW
SQ	SQUARE
ST	SINGLE THROW
STRUCT	STRUCTURAL
SWBD	SWITCHBOARD
SWGR	SWITCHGEAR
TEMP	TEMPORARY
TL	TWISTLOCK
TP	TWISTED PAIR
TSP	TWISTED SHIELDED PAIR
TTB	TELEPHONE TERMINAL BOARD
TV	TELEVISION (CABLE)
TVSS	TRANSIENT VOLTAGE SURGE SUPPRESSOR
TYP	TYPICAL
UF	UNDERFLOOR / UNDERSLAB
UGND	UNDERGROUND
UNO	UNLESS NOTED OTHERWISE
UNSW	UNSWITCHED
UPS	UNINTERRUPTIBLE POWER SOURCE
V	VOLTS / VOLTAGE
VA	VOLT AMPERE
VFD	VARIABLE FREQUENCY DRIVE
W	WEST
W/	WITH
W/O	WITHOUT
WH	WATER HEATER
WP	WEATHER PROOF (NEMA 3R)
X	REMOVE / DEMOLISH
XF	TRANSFORMER
XP	EXPLOSION PROOF
Y	WYE

ELECTRICAL SHEET LIST

SHEET NUMBER	SHEET NAME
E000	ELECTRICAL SYMBOLS, ABBREVIATIONS, AND NOTES
E001	ELECTRICAL SPECIFICATIONS
E100	SITE ELECTRICAL PLAN
E201	POWER PLAN
E202	LIGHTING PLAN
E600	SINGLE LINE DIAGRAM
E601	PANEL SCHEDULES
E602	ELECTRICAL DETAILS
E603	ELECTRICAL DETAILS
F000	FIRE ALARM RISER DIAGRAM
F101	FIRE ALARM PLAN

Kimley»Horn

7900 RANCHARRAH PARKWAY
SUITE 100
RENO, NV 89511
PHONE: 775.787.7552

2023 ©

This document is an instrument of service prepared solely for Kimley-Horn's client and for a particular purpose. Any other use or reliance is without liability to Kimley-Horn.

SEALS

PRELIMINARY
FOR REVIEW ONLY
NOT FOR RECORDATION PURPOSES
Kimley»Horn
ENGINEER _____
PE NO. _____ DATE _____

WEST WENDOVER FIRE STATION #13

1121 N. GENE L. JONES WAY

CLIENT PROJECT INFO

NO:	DATE	DRAWING ISSUE DESCRIPTION

DESIGNED BY: JPN
DRAWN BY: JPN
CHECKED BY: JDB
SCALE: 12" = 1'-0"
DATE: 5/01/2023
PROJECT NO: 092767002
FILENAME:

ELECTRICAL SYMBOLS, ABBREVIATIONS, AND NOTES

E000

5/5/2023 10:31:57 AM BIM 360://092767002-Wendover Fire Station/Wendover FS MEP.rvt

GENERAL ELECTRICAL NOTES

1. PROVIDE ALL LABOR, MATERIALS, TOOLS, ACCESSORIES, ETC. REQUIRED FOR A COMPLETE WORKING ELECTRICAL SYSTEM.
2. ALL CONDUIT SHALL BE ROUTED UNDER FOOTINGS WHERE APPLICABLE. REFER TO STRUCTURAL DETAILS FOR MORE INFORMATION.
3. THE USE OF SERIES RATING OF UPSTREAM OR DOWNSTREAM CIRCUIT BREAKERS OR FUSES IS PROHIBITED. ONLY FULLY RATED SYSTEM COMPONENTS WILL BE ACCEPTED.
4. PULL ROPES: PROVIDE 300 POUND PULL WIRE OR NYLON EQUIVALENT IN ALL INTERIOR EMPTY CONDUIT RUNS. PROVIDE 1/4" DIA NYLON PULL ROPE IN EACH EMPTY EXTERIOR CONDUIT OR DUCT.
5. ALL MULTIPLE POLE CIRCUITS SHALL BE PROVIDED WITH HANDLE TIES AS REQUIRED BY NEC.
6. CONDUIT/CONDUCTOR RUNS SHOWN ARE DIAGRAMMATICAL ONLY. THE BEST FINAL CONDUIT ROUTING SHALL BE AS DETERMINED BY THE ELECTRICAL CONTRACTOR AT THE TIME OF CONSTRUCTION.
7. PRIOR TO PURCHASE OF ANY PANEL, PROTECTIVE DEVICES, SWITCH, STARTER, CONDUIT, WIRE, ETC., TO FEED ANY PIECE OF EQUIPMENT VERIFY THE VOLTAGE, PHASE, AND LOAD OF THAT ITEM IN THE FIELD AND/OR WITH THE PARTICULAR ENTITY INVOLVED IN THE FURNISHING THE ITEM SUCH THAT THE PROPER SIZE & RATING OF THE MATERIALS ARE PURCHASED. NO EXTRAS WILL BE ALLOWED FOR FAILURE TO COMPLY. THIS APPLIES TO ALL EQUIPMENT UNDER OTHER SECTIONS & BY THE OWNER.
8. PROVIDE ALL TRENCHING, EXCAVATION, BACK FILLING, SHORING, PUMPING, COMPACTION TEST ETC. THAT ARE REQUIRED FOR THE SCOPE OF ELECTRICAL WORK.
9. VERIFY THE EXACT LOCATION AND ELEVATION OF ALL ELECTRICAL EQUIPMENT PRIOR TO ROUGH-IN. FINAL CONNECTIONS OF EQUIPMENT SHALL BE PER MANUFACTURERS APPROVED WIRING DIAGRAMS, DETAILS AND INSTRUCTIONS. THE ELECTRICAL CONTRACTOR SHALL PROVIDE MATERIALS AND EQUIPMENT COMPATIBLE WITH EQUIPMENT ACTUALLY SUPPLIED.
10. ALL PANELBOARDS, SWITCHES, MOTOR STARTERS AND SWITCHBOARD CIRCUIT BREAKERS SHALL HAVE ENGRAVED MICARTA NAMEPLATES.
11. PROVIDE ALL PANELBOARDS WITH TYPED DIRECTORIES INSTALLED UNDER A CLEAR PLASTIC COVER. SUBMIT DIRECTORY INFORMATION TO THE OWNER FOR APPROVAL PRIOR TO FINALIZATION. PROVIDE NEW DIRECTORIES FOR ANY PANELBOARDS REQUIRING MODIFICATION.
12. COORDINATE ALL NEW OR PROPOSED WORK WITH EXISTING CONDITIONS. FIELD CONFLICTS AND/OR DISCREPANCIES IN THE DRAWINGS SHALL BE BROUGHT TO THE ATTENTION OF THE ENGINEER OF RECORD FOR RESOLUTION BEFORE PROCEEDING WITH THE WORK.
13. CONDUIT AND CONDUCTOR ROUTINGS WHERE SHOWN ON PLANS ARE DIAGRAMMATICAL. ALTERNATE ROUTES TO BE APPROVED BY CITY OF AURORA PROJECT MANAGER AND ENGINEER PRIOR TO INSTALLATION. CONTRACTOR TO FIELD COORDINATE CONDUCTOR ROUTING IN CONDUIT AND/OR IN CABLE TRAY IN THE FIELD WITH EXISTING CONDITIONS.
14. EXISTING CONDITIONS ARE INDICATED ON THE DRAWINGS WITH HALF-TONE LINE WORK AND/OR THE NOTATION "(E)". DEMOLTITION WORK IS INDICATED WITH FULL-TONE, DASHED LINE WORK, AND NEW OR PROPOSED WORK IS INDICATED WITH FULL-TONE, SOLID LINE WORK AND/OR THE NOTATION "(N)".

ELECTRICAL SPECIFICATIONS

PART ONE - GENERAL

1.1. THE WORK: ALL WORK SHALL BE NEW UNLESS OTHERWISE NOTED. THE CONTRACTOR SHALL PROVIDE THE WORK SHOWN ON THE DRAWINGS AND SPECIFIED FOR ITS INDIVIDUAL SECTIONS OF WORK. THE WORD "WORK" IS DEFINED AS ALL LABOR, TRANSPORTATION, MATERIAL, EQUIPMENT, TOOLS, INSTALLATION, SUPERVISION AND ANY OTHER INCIDENTAL ITEMS OR SERVICES NECESSARY FOR THE PROPER INSTALLATION AND OPERATION OF THE COMPLETE SYSTEMS, WHICH SHALL BE PROVIDED BY THIS CONTRACTOR WHETHER OR NOT SPECIFICALLY INDICATED OR NOTED.

1.2. RESPONSIBILITY: THIS CONTRACTOR IS SOLELY RESPONSIBLE FOR THE ACTIONS OF ITS PERSONNEL, SUPPLIERS, AND SUB-CONTRACTORS. THIS CONTRACTOR SHALL BE RESPONSIBLE FOR THE PERFORMANCE OF ALL WORK AS MAY BE REQUIRED TO ACCOMMODATE THE SUPPORT OF THE EQUIPMENT, INCLUDING ALL MECHANICAL, STRUCTURAL SUPPORTS, CUTTING AND PATCHING, EXCAVATION AND BACKFILL, CONCRETE PADS, ROOF JACKS, ETC. REQUIRING THIS CONTRACTOR'S ENGAGEMENT OF APPROPRIATE TRADES TO PERFORM SUCH WORK FOR THE PROPER INSTALLATION AND OPERATION OF COMPLETE ELECTRICAL SYSTEMS.

1.3. MINIMUM REQUIREMENTS: THESE SPECIFICATIONS ESTABLISH THE MINIMUM REQUIREMENTS FOR THE WORK AND MATERIALS, EQUIPMENT AND METHODS TO BE PROVIDED. THE DRAWINGS MAY INDICATE REQUIREMENTS WHICH EXCEED THESE MINIMUMS.

1.4. GENERAL CONDITIONS: ALL GENERAL CONDITIONS, SPECIAL REQUIREMENTS OR GENERAL REQUIREMENTS OF THE CONSTRUCTION SPECIFICATIONS ARE MADE PART OF THIS SPECIFICATION AND HAVE THE SAME FORCE AND EFFECT AS IF COMPLETELY REPRODUCED.

1.5. DEFINITIONS:
AHJ: AUTHORITY HAVING JURISDICTION.
ASSEMBLY: AN INSTALLATION OR SYSTEM OF MULTIPLE COMPONENTS REQUIRING MULTIPLE CONNECTIONS. (EXAMPLES: TRASH COMPACTOR, MOTORIZED DOOR, HVAC SPLIT SYSTEM, ETC.).
EQUAL: ACCEPTED BY THE ENGINEER AS EQUAL.
FF&E: FURNISHINGS, FIXTURES AND EQUIPMENT - PROVIDED BY OTHERS AT JOBSITE.
RECEIVE, PROTECT, STORE, ASSEMBLE, INSTALL AND CONNECT. PROVIDE MINIMUM 5X STRUCTURAL BACKING. (EXAMPLES: CHANDELIERS, PROJECTORS, ETC.).
PROVIDE: FURNISH, INSTALL, ACTIVATE, AND COMMISSION.

1.6. CODES: ALL WORK SHALL BE DONE IN ACCORDANCE WITH THE 2017 EDITION OF THE NATIONAL ELECTRICAL CODE (NEC), THE 2015 EDITION OF THE INTERNATIONAL ENERGY CONSERVATION CODE (IECC), AND ALL OTHER ADOPTED APPLICABLE FEDERAL, STATE, AND LOCAL REGULATIONS.

1.7. PERMITS: PAY ALL FEES AND OBTAIN ALL PERMITS AND INSPECTIONS REQUIRED FOR THE WORK.

1.8. DRAWINGS: DRAWINGS ARE DIAGRAMMATIC AND SCHEMATIC IN NATURE, AND INDICATE THE TYPE, SIZE, ARRANGEMENT AND LOCATIONS OF MATERIALS AND EQUIPMENT. WORK INCLUDES CERTAIN COMPONENTS, APPURTENANCES, AND RELATED SPECIALTIES THAT MAY NOT BE SHOWN. PROVIDE ALL NECESSARY ITEMS FOR COMPLETE WORK ACCORDING TO INDUSTRY STANDARDS. IT IS THE INTENT OF THE DRAWINGS AND SPECIFICATIONS TO REQUIRE FINISHED WORK, TESTED AND READY FOR OPERATION AS SHOWN ON THE DRAWINGS. ARRANGEMENT OF EQUIPMENT AND ROUTING OF PIPING AND BRANCH CIRCUITING SHALL BE PLUMB AND AT RIGHT ANGLES TO BUILDING CONSTRUCTION, AND MAY REQUIRE MODIFICATIONS TO UNFORESEEN FIELD CONDITIONS REQUIRING ONSITE REVISIONS DURING CONSTRUCTION. (SEE ALSO "BIDDING").

1.9. COORDINATION: THIS PROJECT REQUIRES A HIGH LEVEL OF COORDINATION AND COOPERATION BY OWNER, ARCHITECT, OTHER TRADE/EQUIPMENT VENDORS AND FACILITY CONTRACTORS. CAREFULLY EXAMINE ALL CONTRACT DOCUMENTS INCLUDING, BUT NOT LIMITED TO, SHOP DRAWINGS, ETC. FOR ALL GENERAL CONSTRUCTION, STRUCTURAL, MECHANICAL, PLUMBING, ELECTRICAL, AND SPECIALTY WORK. BECOME FAMILIAR WITH TO ROUGH-IN, COORDINATE THE WORK WITH ALL OTHER TRADES, TAKING RESPONSIBILITY FOR THE PROPER FITTING OF MATERIAL INTO THE BUILDING AS PLANNED WITHOUT INTERFERENCE WITH OTHERWORK. ESTABLISH AND VERIFY LOCATIONS, HEIGHTS, CONNECTIONS, CLEARANCES, ETC. WITH EQUIPMENT INSTALLER (AND OWNER, ARCHITECT, AND/OR INTERIOR DESIGNER FOR FF&E ITEMS), AND MAKE REASONABLE MODIFICATIONS IN THE LAYOUTS NEEDED TO PREVENT CONFLICTS WITH OTHER TRADES IN ORDER TO PROVIDE ACCESS FOR THE PROPER EXECUTION OF THE WORK.

1.10. IDENTICAL: ALL WORK REQUIRED FOR IDENTICAL ITEMS AND ASSEMBLIES OF THE PROJECT SHALL BE PROVIDED, ALTHOUGH EACH SPECIFIC IDENTICAL ITEM MAY NOT BE SHOWN IN DETAIL.

1.11. VERIFICATION: CHECK AND VERIFY ALL SIZES, DIMENSIONS, AND CONDITIONS BEFORE STARTING ANY WORK. ANY DEVIATION(S) OR PROBLEM(S) SHALL BE TRANSMITTED TO THE ENGINEER FOR REVIEW.

1.12. CONNECTIONS: CONNECT ALL EQUIPMENT, SYSTEMS, AND ASSEMBLIES PROVIDED BY OTHERS/OWNER. SAFETY DEVICES AND INTERLOCKS: EXCEPTION: DO NOT INTERCONNECT THE CONTROL SYSTEMS OF THOSE MECHANICAL AND PLUMBING SYSTEMS WHICH ARE SPECIFICALLY NOTED TO BE THE RESPONSIBILITY OF THOSE TRADES. PROVIDE FUSIBLE DISCONNECT SWITCHES AND MOTOR STARTERS FOR ALL EQUIPMENT EXCEPT THOSE ITEMS WHICH ARE SPECIFICALLY LISTED WITH INTEGRAL STARTERS/DISCONNECT SWITCHES. WHERE STARTERS AND/OR DISCONNECT SWITCHES ARE FURNISHED TOGETHER WITH EQUIPMENT, RECEIVE, INSTALL, AND CONNECT THOSE ITEMS.

1.13. SUBMITTAL: SUBMIT TO THE ENGINEER COMPLETE ELECTRONIC SETS OF SHOP DRAWINGS AND TECHNICAL DATA SHEETS FOR ALL EQUIPMENT AND MATERIALS SPECIFIED HEREIN. THE ENGINEER SHALL REVIEW SHOP DRAWINGS AND TECHNICAL DATA SHEETS FOR CONFORMANCE WITH THE CONTRACT DOCUMENTS AND ISSUE A WRITTEN ASSESSMENT TO THE OWNER PRIOR TO COMMENCEMENT OF WORK. THE ENGINEER'S FAILURE TO CORRECT ERRORS IN THE SUBMITTAL SHALL NOT RELIEVE THE CONTRACTOR OF THE OBLIGATION TO PERFORM THE WORK AS SHOWN AND/OR SPECIFIED. THE CONTRACTOR SHALL BE RESPONSIBLE FOR ALL ENGINEERING FEES NECESSARY TO CHANGE PROJECT DOCUMENTS BASED ON ALTERNATE SUBMITTAL PACKAGES/EQUIPMENT SUBSTITUTIONS.

1.14. OR-EQUAL SUBSTITUTIONS: ALL PROPOSED "OR EQUAL" SUBSTITUTIONS SHALL BE SUBMITTED TO THE ENGINEER FOR CONSIDERATION PRIOR TO BIDDING AND AFTER ALL REQUIREMENTS ASSOCIATED WITH SUBSTITUTED EQUIPMENT AND/OR MATERIALS HAVE BEEN COORDINATED WITH OTHER BUILDING TRADES, INCLUDING ALL MECHANICAL, STRUCTURAL, AND/OR ARCHITECTURAL ELEMENTS. THE OWNER'S REPRESENTATIVE SHALL PRE-APPROVE ANY PROPOSED SUBSTITUTION IN WRITING. IDENTIFY AND ANNOTATE ALL REVISED REQUIREMENTS PER BUILDING TRADE ON THE SHOP DRAWINGS. ALSO IDENTIFY ALL COST DEBITS OR CREDITS IN WRITING FOR THE PROPOSED CHANGES PER BUILDING TRADE AND SUMMARIZE THESE AS A TOTAL NET-TO-OWNER CHARGE OR CREDIT FOR CONSIDERATION.

1.15. AS-BUILT: UPON COMPLETION OF CONSTRUCTION, SUPPLY THE ENGINEER WITH AS-BUILT DOCUMENTS ACCURATELY SHOWING THE MATERIALS AND EQUIPMENT AS INSTALLED. PROVIDE OPERATION AND MAINTENANCE MANUAL(S) CONTAINING APPROVED SHOP DRAWINGS, OPERATING AND MAINTENANCE INSTRUCTION FOR SWITCHGEAR, LIGHTING FIXTURES, CONTROLS, AND SPECIALTY EQUIPMENT.

1.16. GUARANTEE: ALL MATERIALS AND WORKMANSHIP SHALL BE GUARANTEED FOR A MINIMUM OF ONE (1) YEAR FROM DATE OF ACCEPTANCE BY OWNER (LONGER IF REQUIRED BY GENERAL AND/OR SPECIAL CONDITIONS). IN ADDITION, THE INSTALLATION SHALL BE GUARANTEED TO PERFORM AS SPECIFIED AND FULFILL EACH AND EVERY REQUIREMENT OF THE DRAWINGS AND SPECIFICATIONS WHEN OPERATED IN ACCORDANCE WITH THE CONTRACTOR'S INSTRUCTIONS. SHOULD THE INSTALLATION IN ANY WAY FAIL TO DO SO, THE CONTRACTOR WILL, WITHOUT DELAY AND WITHOUT COST TO THE OWNER, PROVIDE WHATEVER ADDITIONAL EQUIPMENT, MATERIAL, AND LABOR REQUIRED TO CORRECT THE DEFICIENCY AND COMPLY WITH THE REQUIREMENTS OF THE DRAWINGS AND SPECIFICATIONS. WHERE SPECIFIED EQUIPMENT HAS A LONGER GUARANTEE PERIOD, THE TERMS OF THAT GUARANTEE SHALL GOVERN (EXAMPLE: LED SYSTEM WITH 5 YEAR GUARANTEE). INCANDESCENT LAMPS ARE EXEMPT BUT SHALL BE NEW AND UNUSED AT THE TIME OF FINAL ACCEPTANCE.

1.17. IECC COMPLIANCE: COMPLY WITH ALL REQUIREMENTS SET FORTH IN THE IECC COMPLIANCE CERTIFICATE INCLUDED IN THESE DOCUMENTS. HIRE A COMMISSIONING AGENT TO COMPLY WITH AND PERFORM ALL ASPECTS OF SECTION C408 OF THE 2018 IECC.

BIDDING

1.18. SITE VISIT: CONTRACT DOCUMENTS INDICATE NEW WORK TO BE PERFORMED AND DO NOT PURPORT TO SHOW ALL EXISTING CONDITIONS. VISIT THE SITE PRIOR TO SUBMITTING A BID TO BECOME FAMILIAR WITH EXISTING CONDITIONS. COMPARE THE WORK SPECIFIED IN THE CONTRACT DOCUMENTS AGAINST EXISTING CONDITIONS, AND IDENTIFY AND ANNOTATE ALL WORK OR CONDITIONS THAT ARE DIFFERENT FROM THE CONTRACT DOCUMENTS OR THEIR INTENT. UPON DISCOVERY, IMMEDIATELY NOTIFY AND REPORT IN WRITING ANY DISCREPANCIES TO THE ENGINEER. NO EXTRAS OR CHANGE ORDERS WILL BE ALLOWED FOR FAILURE TO PERFORM THE PRE-BID SITE VISIT.

1.19. BASIS OF PROPOSAL: PROPOSAL SHALL BE BASED ON MANUFACTURERS AND MODELS AS LISTED UNLESS "OR EQUAL" IS INDICATED. PROVIDE SUBSTITUTION REQUESTS A MINIMUM OF FIVE (5) BUSINESS DAYS PRIOR TO BID DATE CLOSING TO ALLOW TIME FOR DUE CONSIDERATION OF PROPOSED ALTERNATE AND SUBSEQUENT NOTIFICATION TO ALL OTHER BIDDERS IN THE EVENT SUBSTITUTION IS DEEMED ACCEPTABLE. DETERMINATION OF SUBSTITUTION EQUALITY RESTS SOLELY WITH THE ENGINEER.

1.20. VALUE ENGINEERING (V.E.) INITIATIVES: IN ADDITION TO THE "AS SPECIFIED/OR EQUAL" BASE BID, A COST REDUCTION INITIATIVE(S) MAY BE PROPOSED BASED ON SUBSTITUTIONS OF EQUIPMENT, MATERIALS, AND/OR METHODS. EACH SUCH PROPOSAL SHALL INCLUDE A DATA SHEET(S) ON THE SPECIFIED ITEM(S), THE PROPOSED SUBSTITUTE(S), AND THE NET CREDIT TO THE OWNER, INCLUDING ALL CREDITS AND CHARGES FROM ALL MEMBERS OF THE CONSTRUCTION TEAM. THE ENGINEER WILL REVIEW AND RENDER AN OPINION TO THE OWNER. IF THE V.E. INITIATIVE IS DECLINED, PROVIDE THE SPECIFIED EQUIPMENT/MATERIAL/METHOD. IF THE V.E. INITIATIVE IS ACCEPTED, AND IF SUCH ACCEPTANCE RESULTS IN A REQUIREMENT TO REVISE ANY DESIGN DOCUMENTS, THE CHARGES FOR THESE REVISIONS SHALL BE BILLED TO THE CONTRACTOR AND THE INVOICING SHALL BE SETTLED BEFORE THE PROJECT IS SIGNED OFF FOR FINAL ACCEPTANCE.

1.21. BIDDING: THE CIVIL, ARCHITECTURAL, MECHANICAL, KITCHEN, AND/OR INTERIOR DRAWINGS CONTAIN DETAILED DESCRIPTIONS, CIRCUITING, AND CONNECTION REQUIREMENTS WHICH ARE PART OF THIS CONTRACTOR'S RESPONSIBILITIES. DO NOT SUBMIT BIDS ON THIS PROJECT PRIOR TO REVIEWING ALL PROJECT DRAWINGS, SPECIFICATIONS, AND ADDENDA.

1.22. SPECIFICATIONS BOOK: THE SPECIFICATIONS CONTAIN SIGNIFICANT INFORMATION, CONDITIONS, AND PROCEDURES WHICH MAY HAVE A SUBSTANTIAL IMPACT ON THIS CONTRACTOR'S COSTS. DO NOT SUBMIT A BID ON THIS PROJECT UNLESS THE SPECIFICATIONS HAVE BEEN THOROUGHLY REVIEWED. THE GENERAL NOTES CONTAINED HEREIN ARE COMPLIMENTARY TO THE SPECIFICATIONS BOOK, AND IN COMPARISON THE MORE STRINGENT REQUIREMENT(S) SHALL GOVERN.

PART TWO - PRODUCTS

2.1. EQUIPMENT STANDARDS: ALL MATERIALS AND EQUIPMENT SHALL BE NEW AND OF THE HIGHEST QUALITY AVAILABLE ("SPECIFICATION GRADE"). EQUIPMENT SHALL BE CONSTRUCTED TO NEMA STANDARDS AND SHALL BE LABELED FOR THEIR INTENDED PURPOSE BY A RECOGNIZED TESTING AGENCY ACCEPTABLE TO THE AHJ (I.E., CSA, ETL, ETC.).

2.2. ACCEPTABLE MANUFACTURERS AND SUPPLIERS: WHERE EQUIPMENT AND MATERIALS ARE NOT SPECIFIED BY NAME THEY ARE DEEMED TO GENERIC, SUBJECT TO THE REQUIREMENTS LISTED HEREIN. THESE MANUFACTURERS ARE CONSIDERED CAPABLE OF OFFERING EQUIVALENT PRODUCTS. MINIMUM STANDARD IN ALL INSTANCES IS COMMERCIAL GRADE.
SWITCHGEAR: EATON, GENERAL ELECTRIC, SIEMENS, SQUARE D
LIGHT FIXTURES: ACUITY, COOPER, HUBBELL, THOMAS
WIRING DEVICES: HUBBELL, LEVITON, LEGRAND, WIREMOLD

2.3. CIRCUITING: ALL WIRING SHALL BE IN CONDUIT. CONCEALED WHERE POSSIBLE EXCEPT WHERE NOTED. EMT WITH STEEL INSULATED THROAT SET SCREW FITTINGS MAY BE USED IN DRY, PROTECTED INTERIOR LOCATIONS. PVC SCHEDULE 40 SHALL BE USED BELOW GRADE AT MINIMUM -24". WRAPPED RIGID ELBOWS AND RISERS SHALL BE USED FOR ALL THROUGH-GRADE TRANSITIONS AND STUB-UPS. RGS OR IMC CONDUIT WITH THREADED FITTINGS SHALL BE USED IN ALL LOCATIONS WHERE EXPOSED TO THE ELEMENTS OR SUBJECT TO PHYSICAL DAMAGE. IMC OR RIGID CONDUIT BELOW GRADE SHALL BE HALF-LAP WRAPPED WITH 20 MIL PVC TAPE. TYPE ENT RACEWAY IS NOT ALLOWED. CONNECT RECESSED AND SUSPENDED LIGHTING FIXTURES, MOTORIZED DAMPERS AND/OR VIBRATING EQUIPMENT WITH STEEL FLEX OR SEALTITE CONDUIT. ALL CONDUIT SHALL HAVE PULL CORD IF OTHERWISE EMPTY.

2.4. MC CABLE: MC CABLE MAY BE USED ONLY WITH SPECIFIC PERMISSION FROM THE ENGINEER. MC CABLE USE SHALL BE LIMITED TO CIRCUITING SOLUTIONS IN TIGHT CONDITIONS WHERE CONDUIT AND WIRE CIRCUITING CANNOT FIT. HOMERUNS AND FEEDERS SHALL BE CONDUIT AND WIRE.

2.5. WIRING: ALL WIRE SHALL BE COPPER UNLESS OTHERWISE NOTED. ALL WIRE SHALL BE STRANDED IN SIZES #8 AWG AND LARGER. SINGLE PHASE BRANCH CIRCUITS SHALL INCLUDE A SEPARATE NEUTRAL WIRE WITH EACH PHASE WIRE. NEUTRAL SHALL BE WHITE WITH COLOR STRIPE MATCHING COLOR OF PHASE WIRE. HOMERUNS TO PANELBOARDS SHALL BE MINIMUM #12 AWG CU IN 3/4" CONDUIT UNLESS OTHERWISE NOTED.

2.6. FUSES AND CIRCUIT BREAKERS: FUSES AND CIRCUIT BREAKERS SHALL BE SIZED PER ACTUAL RESPECTIVE EQUIPMENT PROTECTION (I.e., MOTOR CIRCUIT PROTECTOR, GROUND FAULT CIRCUIT INTERRUPTER, ARC FAULT CIRCUIT INTERRUPTER, ETC.). FUSES SHALL BE DUAL ELEMENT, CURRENT-LIMITING, AND SHALL BE INTERCHANGEABLE BETWEEN FRAME SIZES WITH STANDARD CLIP ADAPTERS AND FUSE REDUCERS. PROVIDE LOCKABLE SPARE FUSE CABINET WITH (3) SPARE FUSES OF EACH SIZE USED.

2.7. DISTRIBUTION SWITCHGEAR: SWITCHGEAR SHALL HAVE COPPER BUS AND HEAVY GAUGE HOUSINGS. SWITCHGEAR IN LOCATIONS OTHER THAN LOCKED ELECTRIC ROOMS SHALL HAVE LOCKABLE COVERS. SWITCHGEAR SHALL HAVE NO LESS THAN 20% SPARE BUSSED AND USABLE SPACE, MEASURED AS A PERCENTAGE OF THE SPACE OCCUPIED BY SPECIFIED CIRCUIT BREAKERS, SWITCHES, ETC.

2.8. SERVICE SWITCHGEAR: IN ADDITION TO THE ABOVE, SERVICE SWITCHGEAR SHALL MEET THE REQUIREMENTS OF THE SERVING UTILITY.

2.9. PANELBOARDS: PANELS SHALL HAVE COPPER BUS AND HARDWARE, BOLT-ON CIRCUIT BREAKERS, FLUSH MONO-FLAT TRIM, PIANO HINGED DOORS AND COVER (DOOR-IN-DOOR) WITH LOCKABLE MASTER-KEYED FLUSH LATCHES. FLUSH-MOUNTED PANELS SHALL HAVE EMPTY CONDUITS STUBBED TO ACCESSIBLE ATTIC SPACE: (1) 3/4" CONDUIT FOR EACH THREE (3) SPARE/SPACE CIRCUITS.

2.10. SAFETY SWITCHES: SWITCHES SHALL BE GENERAL DUTY UP TO 250 VOLTS, HEAVY DUTY ABOVE 250 VOLTS. FUSIBLE SWITCHES SHALL BE FUSED PER THE NAMEPLATE RECOMMENDATIONS OF THE EQUIPMENT BEING CONNECTED.

2.11. MOTOR STARTERS: STARTERS SHALL BE MINIMUM NEMA SIZE 1 WITH INTEGRAL CONTROL TRANSFORMER, RED MUSHROOM "RUN" PILOT LIGHT AND "ON-OFF-AUTO" SELECTOR SWITCH ON COVER. OVERLOAD DEVICES SHALL BE SIZED PER THE NAMEPLATE AMPERAGE OF THE EQUIPMENT BEING CONTROLLED.

2.12. CONTACTORS: CONTACTORS SHALL BE ELECTRICALLY HELD WITH "ON-OFF-AUTO" SELECTOR SWITCH ON COVER.

2.13. RATINGS: ALL ELECTRICAL EQUIPMENT SHALL BE FULLY RATED FOR BRACING IN EXCESS OF THE MAXIMUM AVAILABLE FAULT CURRENT CALCULATED AND SHOWN AT THE EQUIPMENT CONNECTION POINT WITHIN THE DISTRIBUTION SYSTEM. MINIMUM RATING SHALL BE 10K AIC.

2.14. WIRING DEVICES: WIRING DEVICES (SWITCHES, RECEPTACLES, ETC.) SHALL BE SPECIFICATION GRADE "DECORA" STYLE, MINIMUM 20-AMP RATED. COVER PLATES SHALL BE NYLON. DEVICE AND PLATE COLOR(S) SHALL BE AS SPECIFIED BY ARCHITECT OR INTERIOR DESIGNER - VERIFY PRIOR TO COMMENCEMENT OF WORK. WIRING DEVICES EXPOSED TO THE ELEMENTS SHALL HAVE WEATHERPROOF-IN-USE LOCKABLE COVERS. RAISED STEEL BOX COVERS MAY BE USED IN UTILITY AREAS. REFER TO FOOD SERVICE NOTES (IF APPLICABLE TO THIS PROJECT) FOR ADDITIONAL REQUIREMENTS.

2.15. TRANSFORMERS: TRANSFORMERS SHALL BE TYPE TP-1 MINIMUM, WITH ALUMINUM WINDINGS, RATED FOR 150°C RISE (UNLESS OTHERWISE NOTED), MOUNTED ON RUBBER-IN-SHEAR VIBRATION ISOLATORS, CONNECTED WITH FLEXIBLE CONDUIT. PUBLISHED AND MEASURED NOISE RATING SHALL NOT EXCEED NEMA TP-20 MAXIMUM.

2.16. LIGHTING FIXTURES: LIGHT FIXTURES SHALL BE PROVIDED WITH ALL ASSOCIATED HARDWARE (HANGER BARS, PENDANTS, STEMS, RESTRAINTS, CHAINS, CORDS, LAMPS, ETC.). LENSES SHALL BE ACRYLIC, REFLECTORS SHALL BE ANODIZED. FLUORESCENT BALLASTS SHALL BE ELECTRONIC, PROGRAM RAPID START, THD LESS THAN 10%. FLUORESCENT LAMPS SHALL HAVE MINIMUM CRI OF 80%. INCANDESCENT LAMPS SHALL BE 130 VOLT, INSIDE FROST, MINIMUM 2000 HOUR LIFE. LOW VOLTAGE INCANDESCENT LAMPS SHALL BE HIR HALOGEN, MINIMUM 3000 HOUR LIFE. EXTERIOR LIGHTING FIXTURES SHALL BE INSTALLED TO PREVENT WATER, DUST AND INSECT INTRUSION, WITH GASKETING FOR DOOR/BACKPLATE AND SEALANT AT THE WIRING ENTRY POINT. REFER TO LIGHTING FIXTURE SCHEDULE WITHIN PLAN SET FOR ADDITIONAL REQUIREMENTS (LED CRITERIA, ETC.).

2.17. TAMPERPROOF: ALL EQUIPMENT AND CIRCUITING ACCESSIBLE BY THE PUBLIC SHALL BE DEMONSTRATED TO BE TAMPERPROOF AND VANDAL RESISTANT. OPENABLE DEVICES AND EQUIPMENT SHALL BE PAD LOCKABLE.

PART THREE - EXECUTION

3.1. GROUNDING: GROUND ALL EQUIPMENT AND SYSTEM NEUTRAL IN ACCORDANCE WITH THE REQUIREMENTS OF NEC ARTICLE 250. PROVIDE CODE-SIZED EQUIPMENT GROUNDING CONDUCTOR IN ALL FEEDERS AND BRANCH CIRCUIT RACEWAYS. WHERE ISOLATED GROUNDS ARE INDICATED, PROVIDE INSULATED CONDUCTOR (GREEN WITH YELLOW STRIPE).

3.2. UTILITY SERVICES: PROVIDE POWER AND COMMUNICATIONS SYSTEM SERVICES IN ACCORDANCE WITH THE REQUIREMENTS OF THE SERVING UTILITIES. CONTRACTOR TO PROVIDE ARC FLASH STUDY AND LABELLING ON ALL NEW EQUIPMENT IN ACCORDANCE WITH NEC. PROVIDE EXCAVATION, RACEWAY, STRUCTURES, GROUNDING, ETC. AS DIRECTED. POWER SERVICES AND DISTRIBUTION SYSTEM AIC RATING SHALL EXCEED MAXIMUM AVAILABLE FAULT CURRENT THROUGH UTILITY SERVICE TRANSFORMER.

3.3. TEMPORARY CONSTRUCTION POWER: PROVIDE TEMPORARY ELECTRICAL POWER DISTRIBUTION AND LIGHTING AS REQUIRED FOR ALL TRADES THAT REQUIRE SERVICE DURING THE COURSE OF THIS PROJECT IN COMPLIANCE WITH ALL NEC AND OSHA REQUIREMENTS. OWNER SHALL NOT BE RESPONSIBLE FOR TEMPORARY POWER CHARGES.

3.4. LOCATIONS: INDICATED LOCATIONS OF ALL OUTLETS AND EQUIPMENT ARE SUBJECT TO CHANGE. SHIFT/RELOCATE/RECONFIGURE ANY OUTLET, EQUIPMENT OR CONNECTION POINT UP TO 10' AS DIRECTED BY ENGINEER AT NO ADDED COST.

3.5. WORKMANSHIP: THE WORK SHALL BE INSTALLED PARALLEL AND AT RIGHT ANGLES TO THE BUILDING LINES, LEVEL AND PLUMB. THE WORK SHALL BE WELL SUPPORTED AND SOLIDLY MOUNTED. DRESS AND TIE WIRING IN PANELBOARDS AND SWITCHGEAR. THE WORK SHALL BE LEFT CLEAN WITH NO DIRT, DENTS, ABRASIONS, PAINT SPLATTERS, OR OTHER IRREGULARITIES.

3.6. FIRE STOPPING: ALL PENETRATED FIRE RATED SURFACES SHALL BE FIRE SEALED WITH APPROVED U.L. LISTED SEALANTS AS LISTED WITHIN ARCHITECTURAL SPECIFICATIONS. DO NOT EXCEED MAXIMUM ALLOWABLE SURFACE PENETRATIONS DEPENDENT ON RATING OF SURFACES. REFER TO ARCHITECTURAL DRAWINGS FOR DETERMINATION OF PENETRATION LOCATIONS THROUGH FIRE RATED ASSEMBLIES.

3.7. SUPPORTS AND HANGERS: PROVIDE 3" HIGH HOUSEKEEPING CONCRETE PAD BENEATH FLOOR MOUNTED EQUIPMENT, EXTENDING 3" BEYOND EQUIPMENT FOOTPRINT. SUPPORT AND ALIGN ALL RACEWAYS, CABINETS, BOXES, BACK BOXES, FIXTURES, AND EQUIPMENT FROM STRUCTURE. SECURE ALL SUPPORTING METHODS BY MEANS OF TOGGLE BOLTS IN HOLLOW MASONRY, EXPANSION BOLTS IN SOLID MASONRY, CONCRETE PRESET INSERTS OR EXPANSION BOLTS IN CONCRETE, MACHINE SCREWS OR BOLTS IN METAL, AND WOOD SCREWS IN WOOD CONSTRUCTION. ALL SUPPORTING SYSTEMS AND COMPONENTS SHALL BE RATED FOR A MINIMUM OF FIVE (5) TIMES THE ACTUAL LOAD.

3.8. SLEEVES AND PENETRATIONS: PENETRATIONS OF ALL SURFACES SHALL BE PROVIDED WITH SLEEVES THAT SHALL BE SEALED WITH LIKE MATERIALS AND SHALL BE FINISHED WITH ESCUTCHEON PLATES. PENETRATIONS BELOW GRADE LEVEL SHALL BE WATERTIGHT. PENETRATIONS AT EXTERIOR WALLS SHALL BE WEATHERPROOF. ROOF PENETRATIONS SHALL BE FLASHED AND COUNTER FLASHED.

3.9. EXPANSION AND CONTRACTION: RACEWAYS PASSING THROUGH BUILDING EXPANSION JOINTS, ON ROOF, AND IN AREAS OF TEMPERATURE VARIATIONS GREATER THAN 30°F SHALL BE INSTALLED WITH EXPANSION FITTINGS.

3.10. IDENTIFICATION: IDENTIFY ALL EQUIPMENT, SWITCHBOARD CIRCUITS AND ELECTRICALLY-CONNECTED EQUIPMENT WITH ENGRAVED NAMEPLATES. BOXES SHALL BE MARKED WITH PANEL AND CIRCUIT NUMBERS (PERMANENT PEN ACCEPTABLE ABOVE CEILING). NAMEPLATES SHALL BE FASTENED WITH A MINIMUM OF TWO (2) SCREWS. PANEL DIRECTORIES SHALL BE TYPED. CONDUCTORS SHALL BE TAGGED WITH CIRCUIT NUMBERS AT SOURCE, JUNCTION BOXES, AND ALL OUTLET BOXES WITH PERMANENT ADHESIVE MARKER STRIP. PANEL DIRECTORIES SHALL BE TYPED. IDENTIFY WIRING DEVICES WITH SELF ADHESIVE CLEAR SATIN FINISH LABELS WITH SOURCE AND CIRCUIT NUMBER.

3.11. ELECTRIC ROOM CODE COMPLIANCE: DUE TO THE DIAGRAMMATIC NATURE OF THE DESIGN DOCUMENTS (ELECTRICAL, MECHANICAL, PLUMBING, FIRE SPRINKLER, ETC.), COORDINATE WITH ALL FIXTURES, EQUIPMENT AND SECTORS AT THE START OF THIS PROJECT TO INFORM AND VERIFY THAT NO FOREIGN SYSTEMS OR EQUIPMENT ARE MOUNTED ABOVE ELECTRICAL EQUIPMENT OR PASS THROUGH THE DESIGNATED ELECTRIC ROOMS, AND THAT A MINIMUM OF 7'-0" IS PROVIDED AS CLEAR HEADROOM ALONG ACCESS PATHS TO ELECTRIC ROOMS. ANY REROUTING OR RELOCATION OF SYSTEMS THAT A SUBCONTRACTOR

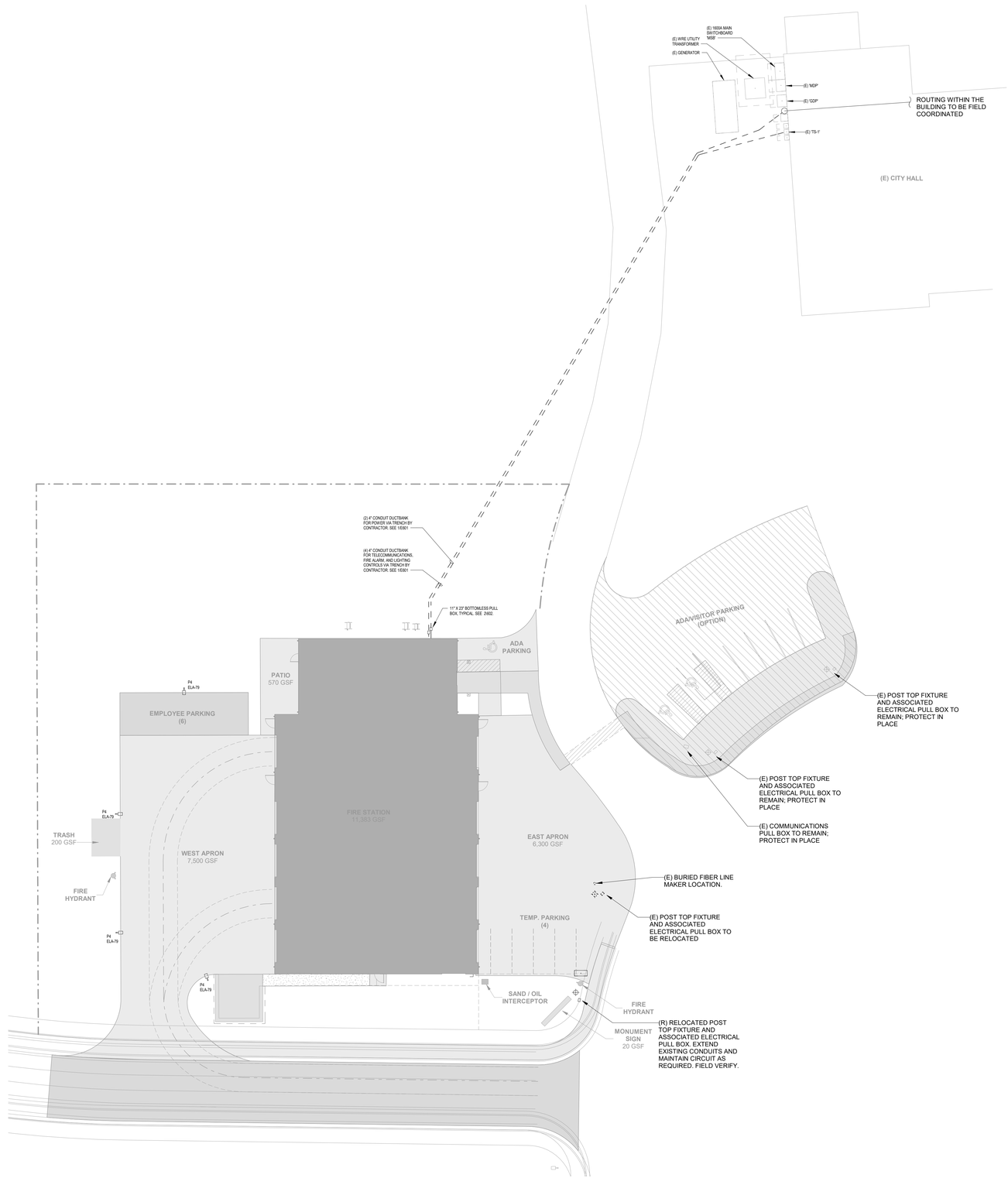

1 SITE ELECTRICAL PLAN

1" = 20'-0"

Kimley»Horn

7900 RANCHARRAH PARKWAY
SUITE 100
RENO, NV 89511
PHONE: 775.787.7552
2023 ©

This document is an instrument of service prepared solely for Kimley-Horn's client and for a particular purpose. Any other use or reliance is without liability to Kimley-Horn.

SEALS

PRELIMINARY
FOR REVIEW ONLY
NOT FOR RECORDATION PURPOSES
Kimley»Horn
ENGINEER _____
PE NO. _____ DATE _____

WEST WENDOVER FIRE STATION #13

1121 N. GENE L. JONES WAY

CLIENT PROJECT INFO

NO:	DATE	DRAWING ISSUE DESCRIPTION

DESIGNED BY: JPN
DRAWN BY: JPN
CHECKED BY: JDB
SCALE: 1" = 20'-0"
DATE: 5/01/2023
PROJECT NO: 092767002
FILENAME:

SITE ELECTRICAL PLAN

E100

5/3/2023 10:32:00 AM BIM 360://092767002/Wendover Fire Station/Wendover FS MEP.rvt

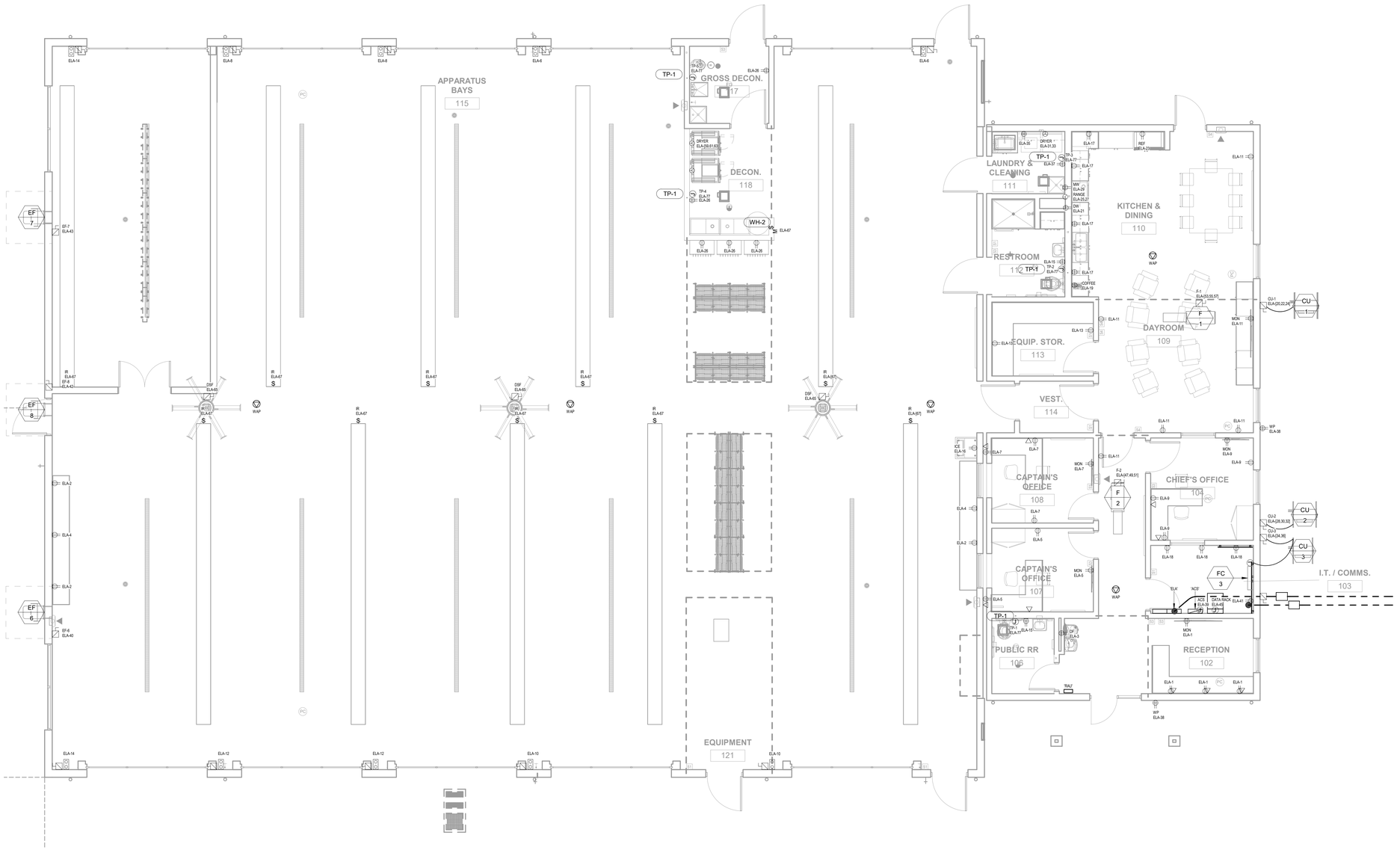

1 POWER PLAN

3/16" = 1'-0"

Kimley»Horn

7900 RANCHARRAH PARKWAY
SUITE 100
RENO, NV 89511
PHONE: 775.787.7552

2023 ©

This document is an instrument of service prepared solely for Kimley-Horn's client and for a particular purpose. Any other use or reliance is without liability to Kimley-Horn.

SEALS

PRELIMINARY
FOR REVIEW ONLY
NOT FOR RECORDATION PURPOSES
Kimley»Horn
ENGINEER _____
PE NO. _____ DATE _____

WEST WENDOVER FIRE STATION #13

1121 N. GENE L. JONES WAY

CLIENT PROJECT INFO

NO:	DATE	DRAWING ISSUE DESCRIPTION

DESIGNED BY: JPN
DRAWN BY: JPN
CHECKED BY: JDB
SCALE: 3/16" = 1'-0"
DATE: 5/01/2023
PROJECT NO: 092767002
FILENAME:

POWER PLAN

E201

BIM 360://092767002/Wendover Fire Station/Wendover FS MEP.rvt
5/2/2023 10:32:01 AM

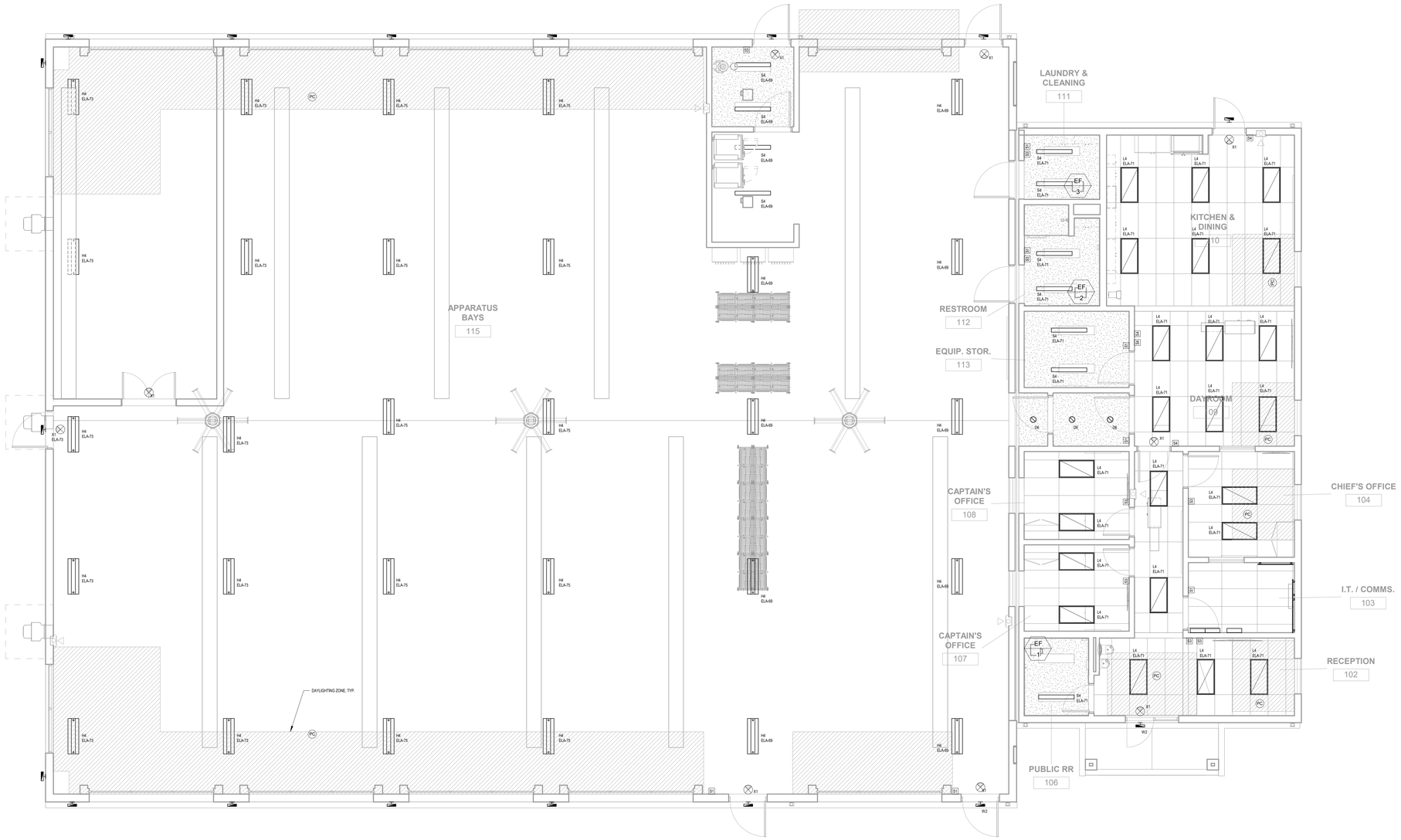

1 LIGHTING PLAN

3/16" = 1'-0"

Kimley»Horn

7900 RANCHARRAH PARKWAY
SUITE 100
RENO, NV 89511
PHONE: 775.787.7552

2023 ©

This document is an instrument of service prepared solely for Kimley-Horn's client and for a particular purpose. Any other use or reliance is without liability to Kimley-Horn.

SEALS

PRELIMINARY
FOR REVIEW ONLY
NOT FOR RECORDATION PURPOSES
Kimley»Horn
ENGINEER _____
PE NO. _____ DATE _____

WEST WENDOVER FIRE STATION #13

1121 N. GENE L. JONES WAY

CLIENT PROJECT INFO

NO.	DATE	DRAWING ISSUE DESCRIPTION

DESIGNED BY: JPN
DRAWN BY: JPN
CHECKED BY: JDB
SCALE: 3/16" = 1'-0"
DATE: 5/01/2023
PROJECT NO: 092767002
FILENAME:

LIGHTING PLAN

E202

5/3/2023 10:32:04 AM
BIM 360://092767002-Wendover Fire Station/Wendover FS MEP.rvt

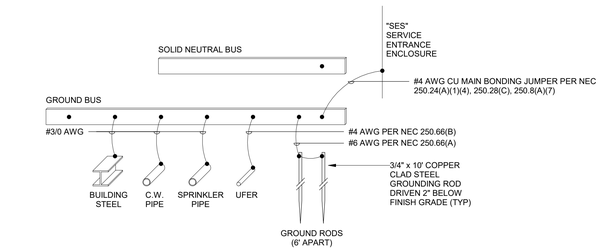

2 MAIN SERVICE ENTRANCE GROUNDING DETAIL

1/8" = 1'-0"

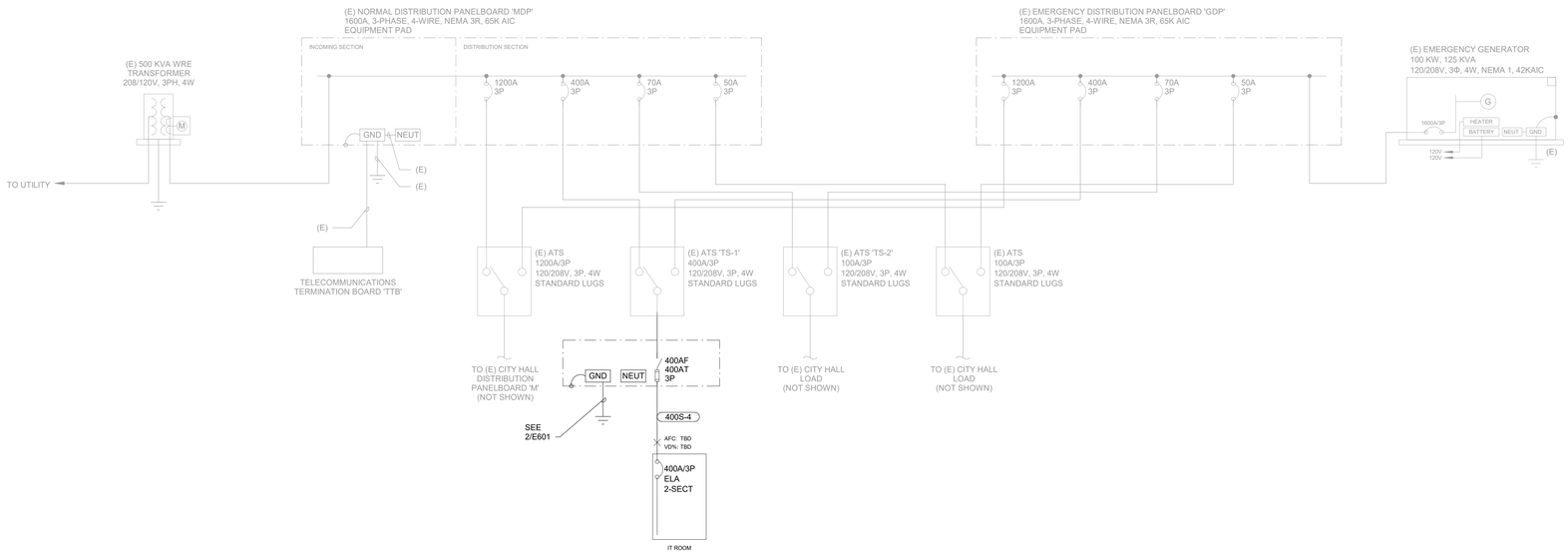

1 SINGLE LINE DIAGRAM

1/8" = 1'-0"

WIRE AND CONDUIT SCHEDULE

SCHEDULE NUMBER (2-4 DIGIT #)
RACEWAY TYPE (NOTE 5)
XXXXZ-# GND
SUBSCRIPT (NOTE 4)
NUMBER OF CURRENT CARRYING CONDUCTORS (1-2 DIGIT#, NOTE 3)
ALL COPPER CONDUCTORS
(E.G.) 150E-4 SE

TAG	TYPICAL OCP DEVICE	CONDUCTOR AMPACITY	CONDUIT SIZE	CONDUCTOR (NOTE 6) SIZE (AWG)	CONDUCTOR (NOTE 6) GND (CU)	IG (CU)	SE (CU)	NOTES
15Z-#	15	15	3/4"	14	14	14	8	
20Z-#	20	20	3/4"	12	12	12	8	
30Z-#	30	30	3/4"	10	10	10	8	
40Z-#	40	40	3/4"	8	10	10	8	
55Z-#	50	55	3/4"	6	10	10	8	
70Z-#	60	70	1"	4	8	8	8	
70Z-#	70	70	1-1/4"	4	8	8	8	
85Z-#	80	85	1-1/4"	3	8	8	8	
85Z-#	90	85	1-1/4"	3	8	8	8	
95Z-#	100	95	1-1/4"	2	8	8	8	
130Z-#	125	130	1-1/2"	1	6	6	6	
150Z-#	150	150	2"	1/0	6	6	6	
175Z-#	175	175	2"	2/0	6	6	4	
200Z-#	200	200	2"	3/0	6	6	4	
230Z-#	225	230	3"	4/0	4	4	2	
255Z-#	250	255	3"	250	4	4	2	
285Z-#	300	285	3"	300	4	4	2	
310Z-#	300	310	4"	350	3	3	1/0	
335Z-#	350	335	4"	400	3	3	1/0	
380Z-#	400	380	4"	500	3	3	1/0	
400Z-#	400	400	(2) 3"	3/0	2	2	1/0	
460Z-#	450	460	(2) 3"	4/0	2	2	1/0	
460Z-#	500	460	(2) 3"	4/0	2	2	1/0	
510Z-#	500	510	(2) 3"	250	2	2	1/0	
570Z-#	600	570	(2) 3"	300	1	1	2/0	
620Z-#	600	620	(2) 3"	350	1	1	2/0	
670Z-#	700	670	(2) 4"	400	1/0	1/0	2/0	
760Z-#	800	760	(2) 4"	500	1/0	1/0	2/0	
840Z-#	800	840	(2) 4"	600	1/0	1/0	3/0	
930Z-#	900	930	(3) 3"	350	2/0	2/0	3/0	
1005Z-#	1000	1005	(3) 3"	400	2/0	2/0	3/0	
1240Z-#	1200	1240	(4) 3"	350	3/0	3/0	3/0	
1675Z-#	1600	1675	(5) 3"	400	4/0	4/0	3/0	
2010Z-#	2000	2010	(6) 3"	400	250	250	3/0	
2520Z-#	2500	2520	(6) 4"	600	350	350	3/0	
3040Z-#	3000	3040	(8) 4"	500	400	400	3/0	
4180Z-#	4000	4180	(11) 4"	500	500	500	3/0	
5040Z-#	5000	5040	(12) 4"	600	750	750	3/0	
XXXXZ-#								
XXXXZ-#								

WIRE AND CONDUIT SCHEDULE NOTES:

1. GROUND "GND" CONDUCTOR MAY BE DELETED ON SERVICE ENTRANCE CONDUCTORS.
2. EQUIPMENT GROUNDING CONDUCTORS SHALL BE SIZED PER TABLE 250-122 (NEC 2017) WHEN CIRCUIT BREAKERS ARE SIZED GREATER THAN AMPERE RATING SHOWN IN TABLE.
3. INDICATES THE QUANTITY OF CURRENT CARRYING CONDUCTORS (GROUND CONDUCTORS NOT INCLUDED) TO BE PULLED IN EACH RACEWAY.
4. GROUNDING SUBSCRIPTS ARE AS FOLLOWS: NO SUBSCRIPT = PROVIDE GROUND WIRE SIZE PER "GND" COLUMN, R = PROVIDE RACEWAY ONLY, CONDUCTORS FURNISHED AND INSTALLED BY OTHERS, SE = PROVIDE GROUND WIRE SIZED PER "SE" COLUMN, IG = PROVIDE AN INSULATED GROUND CONDUCTOR PER "IG" COLUMN ALONG WITH THE GROUND OR EQUIPMENT GROUND CONDUCTOR, NG = DO NOT PROVIDE GROUNDING CONDUCTOR IN RACEWAY.
5. RACEWAY SUBSCRIPTS "Z" ARE AS FOLLOWS: P = PVC SCH-40, E = EMT, R = RIGID, AF = ALUMINUM FLEX, SF = STEELE FLEX, LT = LIQUID TIGHT FLEX, S = SEE SPECIFICATIONS FOR REQUIRED TYPE BASED ON USE AND LOCATION.
6. ALL COPPER CONDUCTORS SHOWN ARE THWN UNLESS OTHERWISE NOTED.

Kimley»Horn

7900 RANCHARRAH PARKWAY
SUITE 100
RENO, NV 89511
PHONE: 775.787.7552
2023 ©

This document is an instrument of service prepared solely for Kimley-Horn's client and for a particular purpose. Any other use or reliance is without liability to Kimley-Horn.

SEALS

PRELIMINARY
FOR REVIEW ONLY
NOT FOR RECORDATION PURPOSES
Kimley»Horn
ENGINEER _____
PE NO. _____ DATE _____

WEST WENDOVER FIRE STATION #13

1121 N. GENE L. JONES WAY

CLIENT PROJECT INFO

NO:	DATE	DRAWING ISSUE DESCRIPTION

DESIGNED BY: JPN
DRAWN BY: JPN
CHECKED BY: JDB
SCALE: 1/8" = 1'-0"
DATE: 5/01/2023
PROJECT NO: 092767002
FILENAME:

SINGLE LINE DIAGRAM

E600

5/3/2023 10:32:04 AM BIM 360://092767002-Wendover Fire Station/Wendover FS MEP.rvt

LIGHTING FIXTURE SCHEDULE

FIXTURE ID	DESCRIPTION	SOURCE	LOAD	VOLTAGE	MOUNTING	MANUFACTURER & MODEL NUMBER	NOTES
D6		LED	18 VA				
H4	4-FOOT HIGH BAY	LED	197 VA	120 V	PENDANT MOUNTED AT +30' AFF	COLUMBIA PEL4-40MV-FAW-EDU OR APPROVED EQUAL	
P4		LED	0 VA				
S4	SURFACE MOUNTED LINEAR STRIP LIGHT	LED	32 VA	120 V	SURFACE MOUNTED @ +9' AFF	LITHONIA C-2-32-MVOLT-GEB101S-WGCUN-NST	
X1	SINGLE FACE, GREEN LETTERS, LED EXIT SIGN	LED	2 VA			ISOLITE ELT-FT-EM-G-1C-BA OR APPROVED EQUAL	

EQUIPMENT SCHEDULE

EQUIPMENT ID	EQUIPMENT DESCRIPTION	COORDINATING DISCIPLINE	VOLTAGE	POLES	LOAD	CONDUIT AND WIRE SIZE*	DISCONNECT MEANS AND SIZE	NEMA RATING	FUSE SIZE	FUSE CLASS	PANEL - CIRCUIT	NOTES
ACS	ACCESS CONTROL SYSTEM		0 V		0 VA						ELA-39	
DR	DATA RACK		0 V		0 VA						ELA-45	
FC-3	FAN COIL UNIT		0 V		0 VA							
J			0 V		0 VA						ELA-77	
TP-1	TRAP PRIMER		0 V		0 VA						ELA-77	
BD	BAY ROLL UP DOOR	ARCHITECTURAL	0 V		0 VA				FPEN		ELA-	
DSF	DESTRATIFICATION FAN	ARCHITECTURAL	0 V		0 VA				FPEN		ELA-65	
MSD	MAIN SERVICE DISCONNECT	ELECTRICAL	208 V		0 VA				FPEN	RK5		
CU-1	CONDENSING UNIT	MECHANICAL	208 V		350 VA				FPEN	RK5	ELA-20,22,24	
CU-2	CONDENSING UNIT	MECHANICAL	208 V		350 VA				FPEN	RK5	ELA-28,30,32	
CU-3	CONDENSING UNIT	MECHANICAL	208 V		350 VA				FPEN	RK5	ELA-34,36	
EF-6	EXHAUST FAN	MECHANICAL	0 V		0 VA				FPEN		ELA-40	
EF-7	EXHAUST FAN	MECHANICAL	0 V		0 VA				FPEN		ELA-43	
EF-8	EXHAUST FAN	MECHANICAL	0 V		2880 VA				FPEN		ELA-42	
F-1	ELECTRIC FURNACE	MECHANICAL	208 V		17600 VA				FPEN	RK5	ELA-53,55,57	
F-2	ELECTRIC FURNACE	MECHANICAL	208 V		17600 VA				FPEN	RK5	ELA-47,49,51	
IR	INFRARED GAS HEATER	MECHANICAL	0 V		0 VA						ELA-67	

LIGHTING CONTROLS LEGEND

- - - - - - - -	LOW VOLTAGE CONTROLS CABLING (BY OTHERS)
————	LINE VOLTAGE CONDUIT AND CONDUCTORS
PP	ROOM/ZONE CONTROL PACK (LITHONIA PP20 OR APPROVE EQUAL)
S1	DIMMING SWITCH, 0-10V DIMMING, 4-BUTTON - ON/OFF/RAISE/LOWER (LITHONIA SPODM-D-SA-WH OR APPROVE EQUAL)
S2	DIMMING SWITCH W/ INTEGRAL OCCUPANCY SENSOR (LITHONIA WSX-PDT-D-SA-WH OR APPROVED EQUAL)
PC	PHOTOCELL SENSOR (LITHONIA CM ADC OR APPROVE EQUAL)
OS	OCCUPANCY SENSOR, 360 DEGREE (LITHONIA CM-PDT-9-ADC OR APPROVE EQUAL)

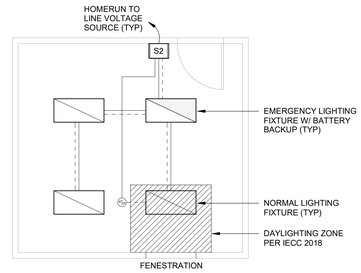

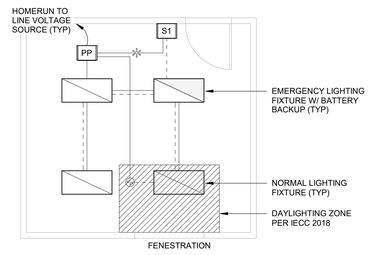

LIGHTING CONTROLS SEQUENCE OF OPERATIONS

1. GENERAL
   1. ALL LIGHTING SHALL BE HIGH EFFICIENCY LED WITH DIMMING CONTROLS. OWNER SHALL HAVE THE ABILITY TO REDUCE TOTAL LUMEN OUTPUT AS DESIRED.
   2. ALL EMERGENCY LIGHTING SHALL BE EMERGENCY BATTERY BACKUP EITHER REMOTELY MOUNTED OR INTEGRAL TO THE FIXTURE. FIXTURES WITH EMERGENCY BATTERY BACKUP ARE INDICATED ON THE PLANS. PROVIDE WITH INTEGRAL TEST SWITCH.
   3. INTERIOR LIGHTING CONTROLS SHALL BE LOW VOLTAGE, 0-10V DIMMING COMPATIBLE.
   4. DAYLIGHTING
      A. FIXTURES SPECIFIED WITH DAYLIGHTING CONTROLS SHALL BE INTEGRAL TO THE FIXTURE TO BE CONTROLLED BY AUTOMATIC PHOTOCELL DIMMING AS REQUIRED IN THE 2018 IECC.
   5. OCCUPANCY
      A. ALL LIGHTING SHALL BE CONTROLLED BY AUTOMATIC OFF/MANUAL ON OCCUPANCY SENSOR CONTROLS. EXPECT WHERE PERMITTED UNDER 2018 IECC. CONTRACTOR SHALL COORDINATE WITH END USER TO SET DELAY TIMES FOR OCCUPANCY SENSORS TO A MAXIMUM OF 30 MINUTES.
      B. THE LIGHTING IN THE HALLWAYS, LOBBIES, AND OTHER EGRESS AREAS SHALL BE HAVE NO OCCUPANCY SENSOR CONTROLS AS PERMITTED BY THE 2018 IECC.

NOTES:

1. CONTROLS CABLING AS REQUIRED. COORDINATE CONTROLS CABLING REQUIREMENTS WITH CONTROLS MANUFACTURER.

1 TYPICAL LIGHTING CONTROLS RISER DIAGRAMS

SCALE: N.T.S.

BRANCH PANEL: ELA

LOCATION: I.T. / COMMS. 103
SUPPLY FROM:
MOUNTING: SURFACE
ENCLOSURE: NEMA 1

VOLTS: 120/208 Wye
PHASES: 3
WIRES: 4

A.I.C. RATING: 22K
MAINS TYPE: MCB
MAINS RATING: 400 A
MCB RATING: 400 A

CKT	CIRCUIT DESCRIPTION	TRIP	POLES	A		B		C		POLES	TRIP	CIRCUIT DESCRIPTION	CKT
1	CO RECEPTION	20 A	1	1040 VA	540 VA					1	20 A	CO WORK BENCH	2
3	EQ DRINKING FOUNTAIN	20 A	1			370 VA	360 VA			1	20 A	CO WORK BENCH	4
5	CO CAPTAIN'S OFFICE	20 A	1					540 VA	1600 VA	1	20 A	EQ BAY DOORS	6
7	CO CAPTAIN'S OFFICE	20 A	1	720 VA	1600 VA					1	20 A	EQ BAY DOORS	8
9	CO CHIEF'S OFFICE	20 A	1			720 VA	1600 VA			1	20 A	EQ BAY DOORS	10
11	CO DAYROOM	20 A	1					1080 VA	1600 VA	1	20 A	EQ BAY DOORS	12
13	CO EQUIPMENT STORAGE	20 A	1	360 VA	1600 VA					1	20 A	EQ BAY DOORS	14
15	CO RESTROOMS	20 A	1			360 VA	1200 VA			1	20 A	EQ ICE MAKER	16
17	CO KITCHEN	20 A	1					720 VA	540 VA	1	20 A	CO TTB	18
19	EQ COFFEE MACHINE	20 A	1	1500 VA	117 VA								20
21	EQ DISHWASHER	20 A	1			180 VA	117 VA			3	20 A	HVAC CU-1	22
23	EQ REFRIGERATOR	20 A	1					180 VA	117 VA				24
25	EQ RANGE OVEN	20 A	2	4500 VA	900 VA					1	20 A	CO GROSS DECON / DECON	26
27						4500 VA	117 VA						28
29	EQ MICROWAVE	20 A	1					180 VA	117 VA	3	20 A	HVAC CU-2	30
31	EQ ELECTRIC DRYER	20 A	2	180 VA	117 VA								32
33						180 VA	175 VA						34
35	RECEPTACLE	20 A	1					180 VA	175 VA	2	20 A	HVAC CU-3	36
37	CO LAUNDRY	20 A	1	180 VA	360 VA					1	20 A	CO EXTERIOR	38
39	EQ ACCESS CONTROL SYSTE...	20 A	1			0 VA	0 VA			1	20 A	HVAC EF-6	40
41	CO TTB	20 A	1					180 VA	2880 VA	1	20 A	HVAC EF-8	42
43	HVAC EF-7	20 A	1	0 VA	--					1	--	SPACE	44
45	EQ DATA RACK	20 A	1			0 VA	--			1	--	SPACE	46
47								5867 VA	--	1	--	SPACE	48
49	HVAC F-2	20 A	3	5867 VA	--					1	--	SPACE	50
51						5867 VA	--			1	--	SPACE	52
53								5867 VA	--	1	--	SPACE	54
55	HVAC F-1	20 A	3	5867 VA	--					1	--	SPACE	56
57						5867 VA	--			1	--	SPACE	58
59								120 VA	--	1	--	SPACE	60
61	EQ GEAR TURNOUT DRYER	20 A	3	120 VA	--					1	--	SPACE	62
63						120 VA	--			1	--	SPACE	64
65	HVAC DESTRAT FAN	20 A	1					0 VA	--	1	--	SPACE	66
67	EQ INFRARED HEATERS	20 A	1	0 VA	--					1	--	SPACE	68
69	LTG BAY	20 A	1			1778 VA	--			1	--	SPACE	70
71	LTG OFFICE AREA	20 A	1					769 VA	--	1	--	SPACE	72
73	LTG BAY	20 A	1	1972 VA	--					1	--	SPACE	74
75	LTG BAY	20 A	1			1970 VA	--			1	--	SPACE	76
77	EQ TRAP PRIMERS	20 A	1					0 VA	--	1	--	SPACE	78
79	LTG WEST APRON	20 A	1	0 VA	--					1	--	SPACE	80
81							--			1	--	SPACE	82
83									--	1	--	SPACE	84
		TOTAL LOAD:		27539 VA		25475 VA		22679 VA					
		TOTAL AMPS:		233 A		216 A		189 A					

LOAD CLASSIFICATION	CONNECTED LOAD	DEMAND FACTOR	EST. DEMAND	PANEL TOTALS
EQUIPMENT	22550 VA	100.00%	22550 VA	
HVAC	39130 VA	100.00%	39130 VA	TOTAL CONN. LOAD: 75692 VA
Other	0 VA	0.00%	0 VA	TOTAL EST. DEMAND: 77305 VA
RECEPTACLE	7560 VA	100.00%	7560 VA	TOTAL CONN.: 210 A
LIGHTING	6461 VA	125.00%	8076 VA	TOTAL EST. DEMAND: 215 A

NOTES:

Kimley»Horn

7900 RANCHARRAH PARKWAY
SUITE 100
RENO, NV 89511
PHONE: 775.787.7552

2023 ©

This document is an instrument of service prepared solely for Kimley-Horn's client and for a particular purpose. Any other use or reliance is without liability to Kimley-Horn.

SEALS

PRELIMINARY
FOR REVIEW ONLY
NOT FOR RECORDATION PURPOSES
Kimley»Horn
ENGINEER _____
PE NO. _____ DATE _____

WEST WENDOVER FIRE STATION #13

1121 N. GENE L. JONES WAY

CLIENT PROJECT INFO

NO:	DATE	DRAWING ISSUE DESCRIPTION

DESIGNED BY: JPN
DRAWN BY: JPN
CHECKED BY: JDB
SCALE: As indicated
DATE: 5/01/2023
PROJECT NO: 092767002
FILENAME:

PANEL SCHEDULES

E601

5/3/2023 10:32:05 AM BIM 360://092767002-Wendover Fire Station/Wendover FS MEP.rvt

8 TYPE S2 DIMMER SWITCH W/ INTEGRAL OCCUPANCY
SCALE: N.T.S.

7 TYPE S1 DIMMER SWITCH
SCALE: N.T.S.

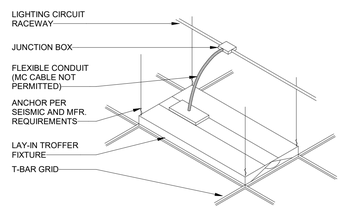

6 RECESSED TROFFER MOUNTING DETAIL
SCALE: N.T.S.

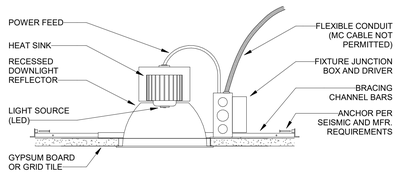

5 RECESSED DOWNLIGHT MOUNTING DETAIL
SCALE: N.T.S.

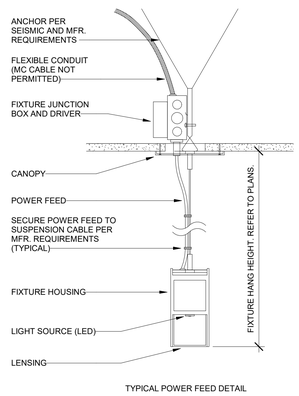

TYPICAL POWER FEED DETAIL

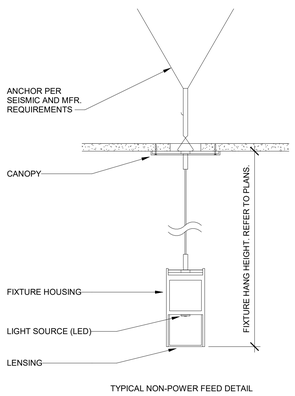

TYPICAL NON-POWER FEED DETAIL

4 PENDANT MOUNTING DETAIL
SCALE: N.T.S.

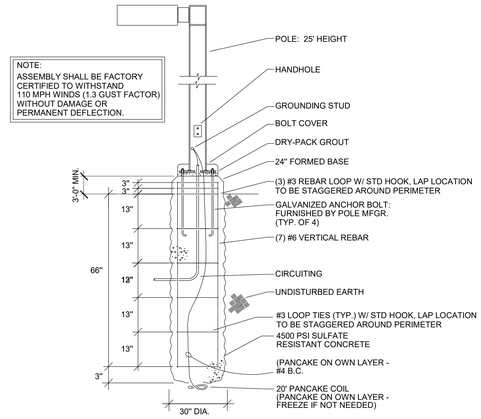

3 LIGHT POLE DETAIL
SCALE: N.T.S.

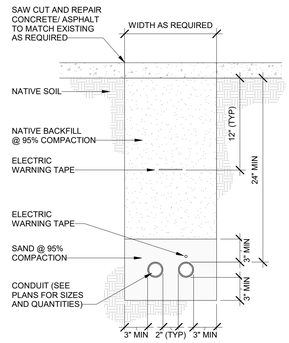

2 TRENCH DETAIL
SCALE: N.T.S.

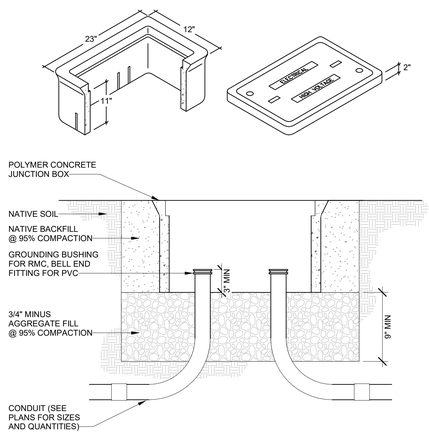

1 PULL BOX DETAIL
SCALE: N.T.S.

Kimley»Horn

7900 RANCHARRAH PARKWAY
SUITE 100
RENO, NV 89511
PHONE: 775.787.7552
2023 ©

This document is an instrument of service prepared solely for Kimley-Horn's client and for a particular purpose. Any other use or reliance is without liability to Kimley-Horn.

SEALS

PRELIMINARY
FOR REVIEW ONLY
NOT FOR RECORDATION PURPOSES
Kimley»Horn
ENGINEER _____
PE NO. _____ DATE _____

WEST WENDOVER FIRE STATION #13

1121 N. GENE L. JONES WAY

CLIENT PROJECT INFO

NO:	DATE	DRAWING ISSUE DESCRIPTION

DESIGNED BY: JPN
DRAWN BY: JPN
CHECKED BY: JDB
SCALE: As indicated
DATE: 5/01/2023
PROJECT NO: 092767002
FILENAME: _____

ELECTRICAL DETAILS

E602

BIM 360://092767002-Wendover Fire Station/Wendover FS MEP.rvt
5/3/2023 10:32:05 AM

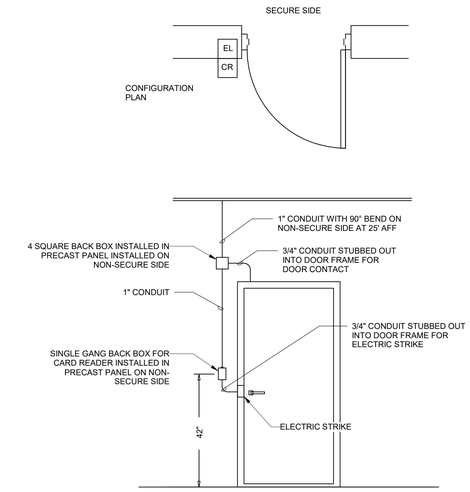

NOTE: ALL CONDUITS AND BACK BOXES SHALL BE CONCEALED IN THE WALL DURING CONSTRUCTION WHERE POSSIBLE.

FUNCTIONALITY:
IN THE NORMAL STATE THE DOOR IS CLOSED, LOCKED ON THE UNSECURED SIDE AND UNLOCKED ON THE SECURED SIDE. DOOR SHALL FAIL SECURE.

1 ACCESS CONTROL - SECURE IN SINGLE DOOR DETAIL

N.T.S

Kimley»Horn

7900 RANCHARRAH PARKWAY
SUITE 100
RENO, NV 89511
PHONE: 775.787.7552
2023 ©

This document is an instrument of service prepared solely for Kimley-Horn's client and for a particular purpose. Any other use or reliance is without liability to Kimley-Horn.

SEALS

PRELIMINARY
FOR REVIEW ONLY
NOT FOR RECORDATION PURPOSES
Kimley»Horn
ENGINEER _____
PE NO. _____ DATE _____

WEST WENDOVER FIRE STATION #13

1121 N. GENE L. JONES WAY

CLIENT PROJECT INFO

NO:	DATE	DRAWING ISSUE DESCRIPTION

DESIGNED BY: JPN
DRAWN BY: JPN
CHECKED BY: JDB
SCALE: 12" = 1'-0"
DATE: 5/01/2023
PROJECT NO: 092767002
FILENAME:

ELECTRICAL DETAILS

E603

5/3/2023 10:32:06 AM BIM 360://092767002-Wendover Fire Station/Wendover FS MEP.rvt

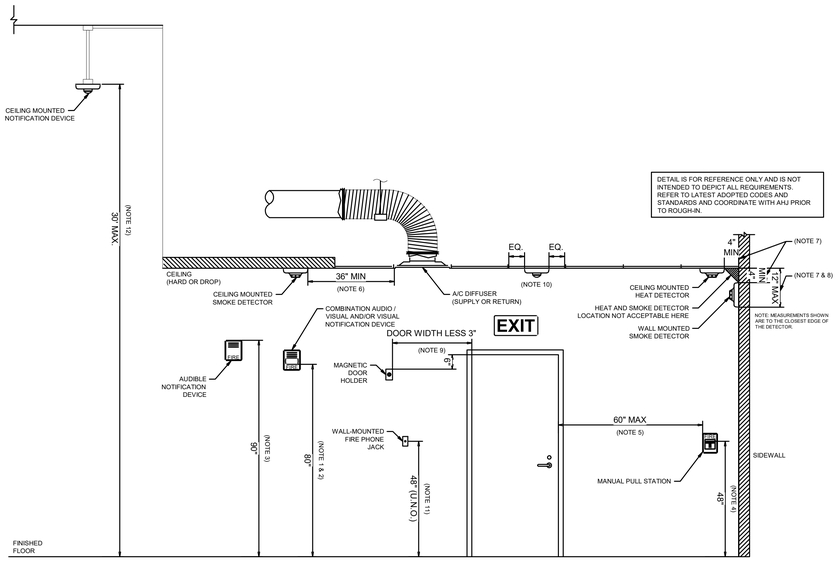

NOTES:
1. 80" ABOVE THE HIGHEST FLOOR LEVEL WITHIN THE SPACE OR 6" BELOW THE CEILING, WHICHEVER IS LOWER.
2. 80" MIN AND 96" MAX ABOVE FINISHED FLOOR.
3. 90" MIN ABOVE FINISHED FLOOR AND 6" MIN BELOW FINISHED CEILING.
4. TOP OF OPERATING HANDLE SHALL BE 48" MAX ABOVE FINISHED FLOOR FOR FORWARD REACH, 54" MAX ABOVE FINISHED FLOOR FOR SIDE REACH, AND 15" MIN ABOVE FINISHED FLOOR.
5. WITHIN 60" OF EXIT DOORWAYS.
6. DO NOT LOCATE IN A DIRECT AIRFLOW OR CLOSER THAN 38" MIN FROM AN AIR SUPPLY DIFFUSER OR RETURN AIR OPENING.
7. HEAT DETECTORS: 4" MIN FROM THE SIDEWALL OR BETWEEN 4" AND 12" FROM CEILING.
8. SMOKE DETECTORS: 12" MAX DOWN FROM CEILING.
9. REFER TO MANUFACTURER'S INSTALLATION MANUAL FOR SPECIFIC REQUIREMENTS AND MODIFY ACCORDINGLY.
10. CENTER CEILING MOUNTED DEVICES IN CEILING TILES.
11. NOT LESS THAN 36" AND NOT MORE THAN 66" ABOVE FLOOR LEVEL WITH CLEAR ACCESS TO THE APPLIANCE THAT IS AT LEAST 30" WIDE.
12. NOTIFICATION DEVICES SHALL NOT BE MOUNTED ABOVE +30' AFF. PROVIDE MOUNTING APPARATUS AS REQUIRED.

3 FIRE ALARM DEVICE MOUNTING HEIGHTS
SCALE: N.T.S.

MAXIMUM ROOM SIZE (FT)	MAXIMUM LENS HEIGHT (FT)	MINIMUM REQUIRED LIGHT OUTPUT (CD) ONE LIGHT PER ROOM
20 X 20	10	15
30 X 30	10	30
40 X 40	10	60
50 X 50	10	95
20 X 20	20	30
30 X 30	20	45
40 X 40	20	80
50 X 50	20	115
20 X 20	30	55
30 X 30	30	75
40 X 40	30	115

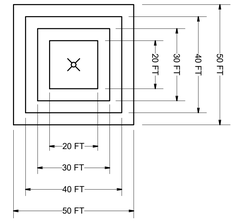

2 ROOM SPACING FOR CEILING-MOUNTED NOTIFICATION DEVICES
SCALE: N.T.S.

SYSTEM INPUTS

		ANNUNCIATION AT LOCAL PANELS				TRANSMIT SIGNALS TO FIRE DEPARTMENT				EVACUATION SIGNALS							AUXILIARY FUNCTION					
		AUDIO-VISUAL FIRE ALARM INDICATION BY ZONE	AUDIO-VISUAL FIRE ALARM INDICATION BY ZONE/MODULE	AUDIO-VISUAL COMMON TROUBLE INDICATION	AUDIO-VISUAL ALARM INDICATION BY DEVICE	COMMON TROUBLE SIGNAL PER BUILDING	COMMON SUPERVISORY SIGNAL PER BUILDING	COMMON FIRE ALARM PER GENERAL AREA	SPRINKLER WATER FLOW PER GENERAL AREA	FACILITY FIRE EVACUATION AUDIO-VISUAL SIGNAL	INDIVIDUAL DWELLING UNIT SOUNDER	INDIVIDUAL DWELLING UNIT SOUNDER BASES (FIRE)	INDIVIDUAL DWELLING UNIT SOUNDER BASES (CARBON MONOXIDE)	ALL UNITS SOUNDER BASES (FIRE)	ADA UNIT VISUAL STROBE DEVICES	ELEVATOR LOBBY FIRE DOOR RELEASE	ELEVATOR RECALL	ELEVATOR SHUNT TRIP				
FIRE ALARMS		A	B	C	D	E	F	G	H	I	J	K	L	M	N	O	P	Q	R	S	T	U
1	MANUAL FIRE ALARM STATIONS	X						X			X			X	X							
2	SPOT-TYPE SMOKE DETECTORS (EXCLUDING DWELLING UNITS)	X						X			X			X	X							
3	FIXED TEMP & RATE-OF-RISE TYPE HEAT DETECTORS	X						X			X			X	X							
4	WATER FLOW SWITCHES - WET-PIPE	X									X			X	X							
5	NON-ADA DWELLING UNIT SMOKE DETECTOR											X										
6	NON-ADA DWELLING UNIT HEAT DETECTOR											X										
7	ADA DWELLING UNIT SMOKE DETECTOR											X			X							
8	ADA DWELLING UNIT HEAT DETECTOR											X			X		X					
9	ELEVATOR LOBBY SMOKE DETECTOR	X						X			X			X	X	X	X					
10	ELEVATOR SHAFT OR CONTROL ROOM SMOKE DETECTOR	X						X			X			X	X		X					
11	ELEVATOR SHAFT OR CONTROL ROOM HEAT DETECTOR	X						X			X			X	X			X				
12																						
13																						
14																						
SUPERVISORY SIGNALS																						
15	VALVE SUPERVISORY SWITCH - WET-PIPE SPRINKLERS		X				X															
16	VALVE SUPERVISORY SWITCH - SPRINKLERS			X			X															
17	TEMPERATURE MONITORING SYSTEM			X			X															
18	CONTROL COMPONENT COMMON TROUBLE CONDITION		X				X															
19	IN-DUCT SMOKE DETECTORS		X				X															
TROUBLE CONDITIONS																						
20	LOW BATTERY VOLTAGE			X		X																
14	CIRCUIT FAULT		X	X		X																
14	SUPERVISED COMPONENT FAILURE			X		X																
14	AC POWER FAILURE			X		X																
14	DWELLING UNIT CARBON MONOXIDE DETECTION		X	X		X							X									

FIRE ALARM MATRIX NOTES:
1. DWELLING UNIT ALARMS FOR ADA AND NON-ADA UNITS SHALL INITIATE ONLY IN THE RESPECTIVE UNIT WHEN DETECTION (SMOKE OR CO) IS PRESENT IN THAT UNIT.
2. BUILDING ALARMS SHALL ACTIVATE ALL DEVICES IN ALL UNITS.

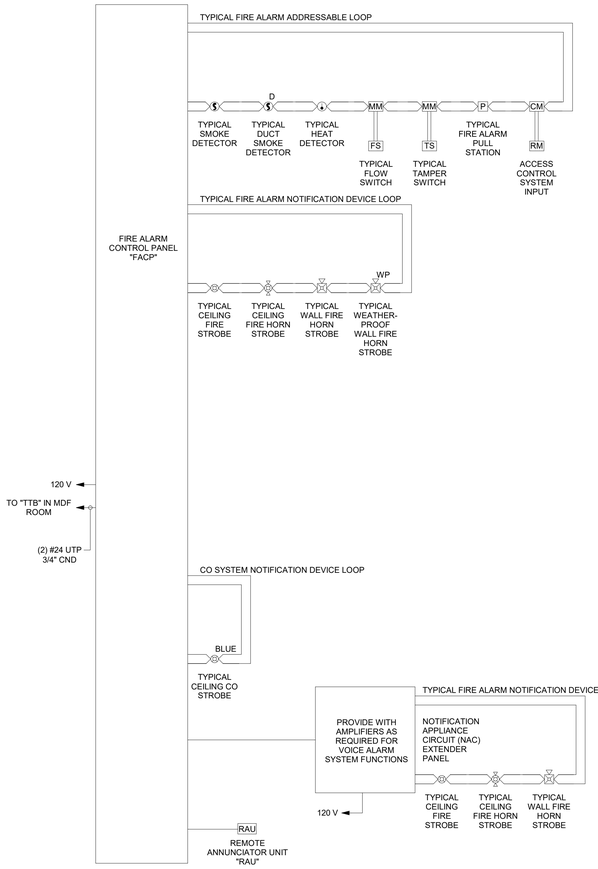

1 EXISTING FIRE ALARM RISER DIAGRAM
SCALE: N.T.S.

FIRE ALARM SYMBOLS

FIRE ALARM		MOUNTING (UON)
S	SMOKE DETECTOR.	C
S D	DUCT SMOKE DETECTOR.	FVM
S CO	SMOKE/CO DETECTOR.	FVM
H	HEAT DETECTOR.	C
FS	FLOW SWITCH.	W
TS	TAMPER SWITCH.	W
RM	RELAY MODULE.	FVM
MM	MONITOR MODULE	W
CO	CARBON MONOXIDE DETECTOR.	W
	FIRE STROBE, CEILING MOUNTED.	C
	FIRE HORN STROBE, CEILING MOUNTED.	C
	FIRE LOUDSPEAKER, CEILING MOUNTED.	C
	FIRE STROBE, WALL MOUNTED AT +84" AFF.	W
	FIRE HORN STROBE, WALL MOUNTED AT +84" AFF.	W
	FIRE HORN STROBE, WALL MOUNTED.	C
	FIRE HORN STROBE, WALL MOUNTED.	C
	FIRE HORN STROBE, WALL MOUNTED.	C
WALL	FIRE ALARM CONTROL PANEL, SURFACE MOUNTED.	W

FIRE ALARM GENERAL NOTES

1. FIRE ALARM SYSTEM DESIGN: FIRE ALARM SYSTEM DESIGN AS SHOWN IS CONCEPTUAL. LOCATION AND QUANTITY OF LIFE SAFETY EQUIPMENT AND FIELD DEVICES DEPICTED ON DRAWINGS ARE RECOMMENDATIONS TO CONTRACTOR FOR BIDDING PURPOSES ONLY. FIRE ALARM CONTRACTOR IS RESPONSIBLE FOR PROVIDING THE FINAL DESIGN IN ACCORDANCE WITH APPLICABLE CODES AND LOCAL REQUIREMENTS. EXACT ROUTING OF CONDUIT TO SUIT CONDITIONS. ALL CHANGES SHALL BE CLEARLY INDICATED ON THE RECORD DRAWINGS. REFER TO THE PROJECT SPECIFICATIONS FOR ADDITIONAL REQUIREMENTS.
2. PERMIT: FIRE ALARM CONTRACTOR IS RESPONSIBLE FOR OBTAINING A SEPARATE FIRE ALARM PERMIT AND PROVIDING A DETAILED SET OF SHOP DRAWINGS FOR APPROVAL BY ENGINEER AND LOCAL FIRE MARSHAL PRIOR TO START OF SYSTEM INSTALLATION AS REQUIRED BY THE MUNICIPALITY. SHOP DRAWINGS FOR THE FIRE ALARM SYSTEM(S) SHALL INCLUDE NOT LESS THAN THE MINIMUM REQUIRED DOCUMENTATION PER LOCAL FIRE MARSHAL AND NFPA 72.
3. SUBMITTALS: PROVIDE THE FOLLOWING DOCUMENTS FOR REVIEW AND APPROVAL:
   A. FLOOR PLAN LAYOUT INDICATING FINAL DEVICE LOCATIONS, INCLUDING CANDELA RATINGS FOR ALARM NOTIFICATION APPLIANCES, AND USE OF ALL ROOMS.
   B. BATTERY CAPACITY CALCULATIONS INDICATING REQUIRED AND SPARE CAPACITY.
   C. NOTIFICATION APPLIANCE CIRCUIT CALCULATIONS AND VOLTAGE DROP CALCULATIONS (FOR THE SYSTEM TO BE INSTALLED).
   D. EQUIPMENT CUT SHEETS WITH CATALOG NUMBERS AND DESCRIPTIONS CLEARLY HIGHLIGHTED TO SPECIFICALLY INDICATE WHICH PRODUCTS ARE PROPOSED FOR USE.
   E. RISER DIAGRAM.
   F. WRITTEN NARRATIVE PROVIDING INTENT AND SYSTEM DESCRIPTION.
   G. SEQUENCE OF OPERATION IN EITHER AN INPUT/OUTPUT MATRIX OR NARRATIVE FORM.
4. COORDINATION: COORDINATE INSTALLATION W/ OTHER TRADES. REFER TO THE ARCHITECTURAL PLANS FOR DIMENSIONS, ROOM FINISHES, FIRE WALLS, DOOR HARDWARE SCHEDULES AND LIKE ITEMS. REFER TO THE STRUCTURAL DRAWINGS FOR STRUCTURAL MEMBERS. REFER TO OTHER TRADES PLANS TO UNDERSTAND THE EXTENT OF THEIR WORK AS REQUIRED. REPORT ANY DISCREPANCIES TO THE ENGINEER FOR CLARIFICATION.
5. REGULATIONS: FIRE ALARM SYSTEMS SHALL BE INSTALLED IN ACCORDANCE WITH LOCAL FIRE MARSHAL REQUIREMENTS, MANUFACTURER'S WRITTEN INSTRUCTIONS, RECOGNIZED INDUSTRY PRACTICES, AND THE LATEST ADOPTED OF ALL APPLICABLE CODES AND REGULATIONS SUCH AS NFPA 72, NFPA 70, NFPA 101, AND ADA. FURNISH AND INSTALL ALL FIRE ALARM EQUIPMENT, RACEWAY SYSTEM, CONDUCTORS, DEVICES, AND ALL OTHER ACCESSORIES AS REQUIRED TO PROVIDE A COMPLETE AND FULLY FUNCTIONAL FIRE ALARM SYSTEM. SYSTEMS AND COMPONENTS SHALL BE LISTED AND APPROVED FOR THE PURPOSE FOR WHICH THEY ARE INSTALLED. FOLLOW MANUFACTURER CUT SHEET AS APPROPRIATE.
6. AUDIBLE NOTIFICATIONS: AUDIBLE ALARM NOTIFICATION APPLIANCES SHALL BE OF SUCH CHARACTER AND SO LOCATED, AS TO BE CLEARLY HEARD THROUGHOUT AND ABOVE AMBIENT NOISE LEVELS.
7. NOTIFICATION APPLIANCES: NOTIFICATION APPLIANCES MAY BE OF CONVENTIONAL OR ADDRESSABLE TYPE. FOR ADDRESSABLE APPLIANCES, PROVIDE LABELS WITH ASSIGNED ADDRESS ON BOTH THE DETECTOR HOUSING AND THE BASE WITH A BLACK ON CLEAR TYPED LABEL. THE BASE ADDRESS SHALL BE LEGIBLE WITHOUT REMOVAL OF THE DETECTOR. THE DETECTOR ADDRESS SHALL BE CONCEALED WITH PLACED INTO THE BASE.
8. POWER SUPPLY: THE PRIMARY AND SECONDARY POWER SUPPLY FOR THE FIRE ALARM SYSTEM SHALL BE PROVIDED IN ACCORDANCE WITH NFPA 72.
9. SPARE: CIRCUITS SHALL CONTAIN AT LEAST 20 PERCENT SPARE CAPACITY FOR NOTIFICATION APPLIANCES ON THE NAC AND/OR AMPLIFIER CIRCUITS AND 20 PERCENT SPARE CAPACITY FOR INITIATING DEVICES ON THE SLC.
10. MANUALS: PROVIDE THE OWNER WITH A COMPLETE FIRE ALARM SYSTEM OPERATIONS AND INSTALLATION MANUAL COVERING ALL SYSTEM EQUIPMENT INSTALLED FOR THIS PROJECT. KEEP AT THE MAIN FIRE ALARM CONTROL PANEL.
11. TERMINATIONS: CONNECTIONS AND SPLICES SHALL BE MADE USING SCREW TERMINAL BLOCKS. THE USE OF WIRE NUT TYPE CONNECTORS IS PROHIBITED IN THE SYSTEM.
12. RACEWAY AND WIRING: PATHWAY SHALL BE INSTALLED IN EMT IN THE MANUFACTURING AREAS OF THE PLANT AND WITHIN WALLS AND WHERE INACCESSIBLE WITHIN THE OFFICES AREAS. CABLING SHALL BE PROTECT FROM DAMAGE AND SECURED IN OPEN PATHWAYS USING CABLE TRAY OR J-HOOKS. EXPOSED EMT CONDUIT SHALL BE PAINTED RED ENAMEL. CONTRACTOR SHALL COORDINATE ROUTINGS WITHIN THESE EXPOSED AREAS TO PRODUCE A SYMMETRIC AND AESTHETIC LAYOUT.
13. CERTIFICATION: CERTIFY INSTALLATION WITH THE SUCCESSFUL COMPLETION OF ALL ASSOCIATED NFPA 72 TESTS AND MEASURE SOUND PRESSURE LEVELS IN ALL ROOMS (IF APPLICABLE) WITHIN THE SCOPE OF THIS PROJECT.
14. TESTING: SYSTEMS SHALL BE TESTED IN ACCORDANCE WITH NFPA REQUIREMENT. THE OWNER'S REPRESENTATIVE AND AHJ SHALL BE PRESENT FOR THE TEST. THE CONTRACTOR SHALL CARRY ALL COSTS ASSOCIATED WITH FINAL CONNECTIONS, PROGRAMMING AND TESTING AS WELL AS DISABLING CONNECTIONS TO THE MUNICIPAL LOOP DURING FINAL CONNECTIONS AND TESTING. EQUIPMENT NOT OPERATING CORRECTLY SHALL BE FIELD CORRECTED OR REPLACED.
15. WARRANTY: CONTRACTOR SHALL WARRANTY ALL WORKMANSHIP AND MATERIALS FOR ONE YEAR FROM FINAL INSPECTION.
16. KNOX BOX: THE ACCESS BOX(ES) SHALL BE OF AN APPROVED TYPE LISTED IN ACCORDANCE WITH UL 1037.
17. ACCESS CONTROL: ACCESS CONTROL SYSTEMS ALONG WITH THE PATH OF EGRESS SHALL BE DESIGNED FOR FIRE-RATED APPLICATION.
18. ELECTRIC GATES: ELECTRIC GATES SHALL BE EQUIPPED WITH A MEANS OF OPENING THE GATE BY FIRE DEPARTMENT PERSONNEL FOR EMERGENCY ACCESS. EMERGENCY OPENING DEVICES SHALL BE APPROVED BY THE FIRE CODE OFFICIAL.
19. ACCESS-CONTROLLED EGRESS DOOR: ACTIVATION OF THE BUILDING FIRE ALARM SYSTEM SHALL AUTOMATICALLY UNLOCK THE DOOR LEAVES IN THE DIRECTION OF EGRESS, AND THE DOOR LEAVES SHALL REMAIN UNLOCKED UNTIL THE FIRE ALARM CONDITION IS MANUALLY RESET.
20. SUPERVISION AND ALARMS: ALL VALVES CONTROLLING THE WATER SUPPLY FOR AUTOMATIC SPRINKLER SYSTEMS, PUMPS, TANKS, WATER LEVELS AND TEMPERATURES, CRITICAL AIR PRESSURE, AND WATERFLOW SWITCHES ON ALL SPRINKLER SYSTEMS SHALL BE ELECTRICALLY SUPERVISED BY A LISTED FIRE ALARM CONTROL UNIT.
21. MONITORING: ACTUATION OF THE AUTOMATIC SPRINKLER SYSTEM SHALL ACTUATE THE BUILDING FIRE ALARM SYSTEM.
22. DUCT SMOKE DETECTORS: DUCT SMOKE DETECTORS ARE REQUIRED TO BE CONNECTED TO THE FIRE ALARM AND SIGNALING SYSTEM AND SHALL INITIATE A SUPERVISORY SIGNAL. SMOKE DETECTORS MOUNTED IN THE AIR DUCTS OF HVAC SYSTEMS IN A FIRE ALARM SYSTEM WITHOUT A CONSTANTLY ATTENDED LOCATION OR SUPERVISING STATION SHALL BE PERMITTED TO INITIATE AN ALARM SIGNAL.

Kimley»Horn
7900 RANCHARRAH PARKWAY
SUITE 100
RENO, NV 89511
PHONE: 775.787.7552
2023 ©

This document is an instrument of service prepared solely for Kimley-Horn's client and for a particular purpose. Any other use or reliance is without liability to Kimley-Horn.

SEALS

PRELIMINARY
FOR REVIEW ONLY
NOT FOR RECORDATION PURPOSES
Kimley»Horn
ENGINEER _____
PE NO. _____ DATE _____

WEST WENDOVER FIRE STATION #13

1121 N. GENE L. JONES WAY

CLIENT PROJECT INFO

NO:	DATE	DRAWING ISSUE DESCRIPTION

DESIGNED BY: JPN
DRAWN BY: JPN
CHECKED BY: JDB
SCALE: As indicated
DATE: 5/01/2023
PROJECT NO: 092767002
FILENAME:

FIRE ALARM RISER DIAGRAM

F000

5/3/2023 13:32:06 AM BIM 360://092767002/Wendover Fire Station/Wendover FS MEP.rvt

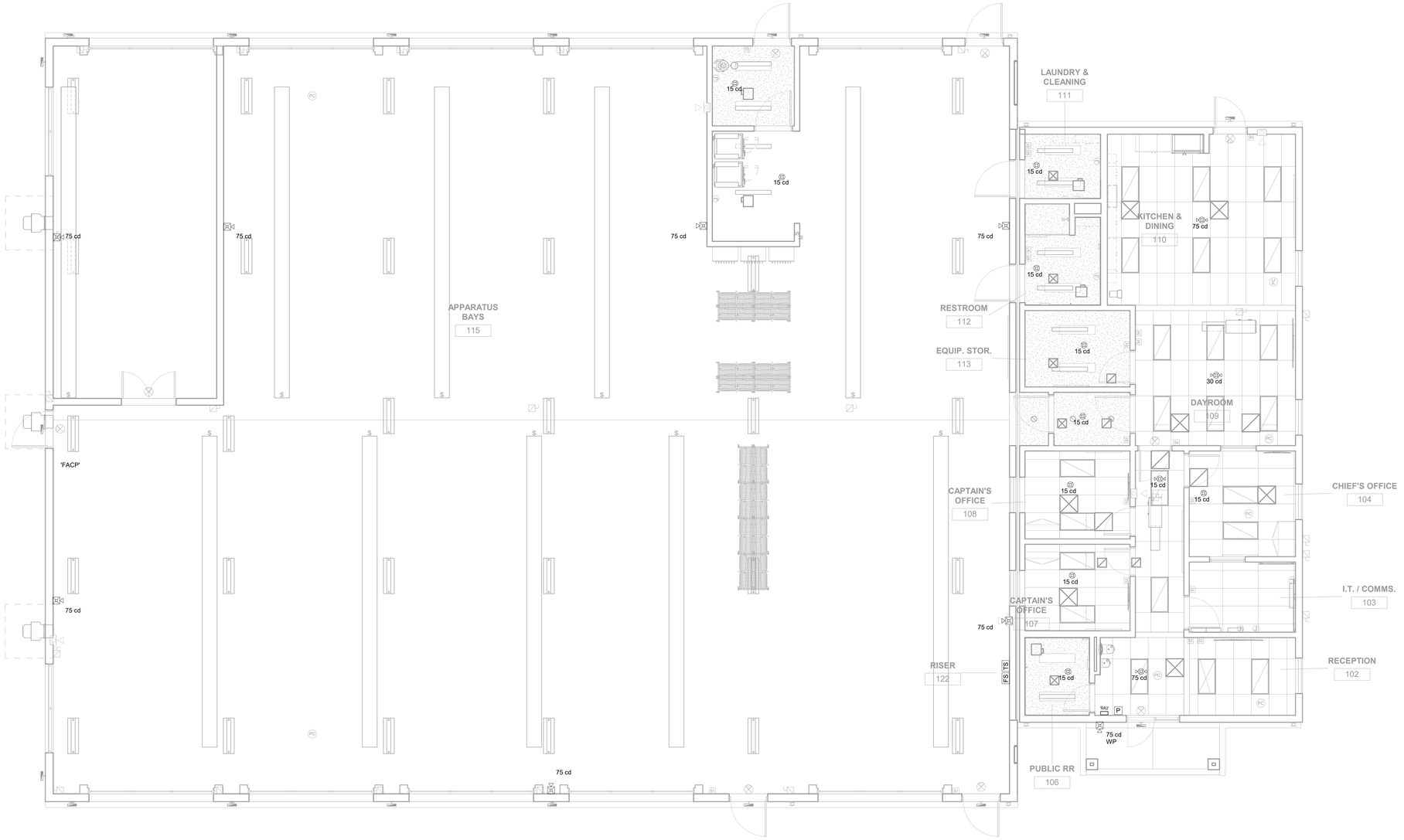

1 FIRE ALARM PLAN

3/16" = 1'-0"

Kimley»Horn

7900 RANCHARRAH PARKWAY
SUITE 100
RENO, NV 89511
PHONE: 775.787.7552

2023 ©

This document is an instrument of service prepared solely for Kimley-Horn's client and for a particular purpose. Any other use or reliance is without liability to Kimley-Horn.

SEALS

PRELIMINARY
FOR REVIEW ONLY
NOT FOR RECORDATION PURPOSES
Kimley»Horn
ENGINEER _____
PE NO. _____ DATE _____

WEST WENDOVER FIRE STATION #13

1121 N. GENE L. JONES WAY

CLIENT PROJECT INFO

NO.	DATE	DRAWING ISSUE DESCRIPTION

DESIGNED BY: JPN
DRAWN BY: JPN
CHECKED BY: JDB
SCALE: 3/16" = 1'-0"
DATE: 5/01/2023
PROJECT NO: 092767002
FILENAME:

FIRE ALARM PLAN

F101

5/3/2023 10:32:08 AM BIM 360://092767002-Wendover Fire Station/Wendover FS MEP.rvt

NUCOR
BUILDING SYSTEMS
A DIVISION OF NUCOR CORPORATION

PROJECT NUMBER:	U23G0555A
PROJECT NAME:	WENDOVER FS #13 REPLACEMENT
PROJECT LOCATION:	WENDOVER, NV
COUNTY:	ELKO
CUSTOMER:	MICHAEL CLAY CORPORATION

MBMA MEMBER
CSSBI
CWB CERTIFIED CSA W47.1
IAS ACCREDITED AC 472
CWB

APPROVAL ORDER

THESE DRAWINGS MUST BE RETURNED SIGNED BY YOU (ON NUCOR'S STAMP) WITH THE CORRECT STATUS OF THE DRAWINGS INDICATED. THE DRAWINGS SHOULD EITHER BE MARKED, "APPROVED WITHOUT EXCEPTION", "APPROVED AS NOTED", OR "NOT APPROVED – REVISE AND RESUBMIT". WHEN AN ARCHITECT IS INVOLVED AND HIS/HER STAMP IS REQUIRED TO SHOW THE STATUS OF THE DRAWINGS, **WE STILL REQUIRE YOUR SIGNATURE AND STATUS AS WELL.**

KEEP IN MIND THAT NBS WILL NOT PURCHASE ANY SPECIAL MATERIAL FOR THIS PROJECT UNTIL THE APPROVAL DRAWINGS ARE RETURNED AND APPROVED. ITEMS OF THIS NATURE INCLUDE (BUT ARE NOT LIMITED TO) CRANE STEEL, SPECIAL COLOR COILS, WALK DOORS, WINDOWS, CURBS, ETC. ONCE THE APPROVALS HAVE BEEN RETURNED A CHANGE ORDER WILL FOLLOW CONFIRMING ANY SCOPE CHANGES, COST CHANGES, AND A FINAL DELIVERY SCHEDULE.

THIS BOX NEEDS TO BE FILLED IN COMPLETELY BEFORE NUCOR CAN PROCEED.

THESE DRAWINGS ARE FOR APPROVAL USE ONLY. FINAL DETAILING AND FABRICATION HAVE NOT YET BEEN SCHEDULED. YOUR PRICE IS PROTECTED BASED ON THE MUST SHIP BY DATE LISTED ON THE ORDER CONTRACT. PLEASE RETURN THE APPROVED DRAWINGS NO LATER THAN **08/14/2023** SO WE CAN BEGIN FINAL DETAILING AND DETERMINE A DELIVERY SCHEDULE. FAILURE TO RETURN THE DRAWINGS BY THE DATE SHOWN ABOVE MAY VOID PRIOR SCHEDULE COMMITMENTS AND POSSIBLY RESULT IN AN INCREASE IN PRICE BASED ON THE MUST SHIP BY DATE.

- ☐ APPROVED WITHOUT EXCEPTION
- ☐ APPROVED AS NOTED
- ☐ NOT APPROVED, REVISE AND RESUBMIT

CUSTOMER'S SIGNATURE: _____

DATE: _____

PLEASE VERIFY/SUPPLY INFORMATION ON SHEETS:

STRUCTURAL/SHEETING DRAWINGS **E1 – E12**

DETAILS **D1 – D20**

ISSUE	DWN	CHK	ENG	PE	DATE
CONST. AB PLAN	NBS	EOP	CBM		7/24/2023
BUILDING DEPARTMENT REVIEW	WBS	DAN	CBM		7/31/2023

NUCOR BUILDING SYSTEMS
300 INDUSTRIAL PARKWAY, WATERLOO, IN 46793
PHONE: (260) 837-7891 FAX: (260) 837-7384
PO BOX 1006, 200 WHETSTONE RD, SWANSEA, SC 29160
PHONE: (803) 568-2100 FAX: (803) 568-2121
600 APACHE TRAIL, TERRELL, TX 75160
PHONE: (972) 524-4700 FAX: (972) 524-4717
1050 WATERY LANE, BRIGHAM CITY, UT 84302
PHONE: (435) 919-3100 FAX: (435) 919-3101

PROJECT NAME: WENDOVER FS #13 REPLACEMENT
WENDOVER, NV

CUSTOMER NAME: MICHAEL CLAY CORP
WINNEMUCCA, NV

JOB NUMBER: U23G0555A

SHEET TITLE

This set of plans only to the materials described herein which Nucor Building Systems, a division of Nucor Corporation has prepared. The drawings and the information shown thereon are the product of Nucor Building Systems's engineering staff and those drawings is employed by Nucor Buildings Systems and does not serve as a certification of design of record and shall not be construed as such.

SHEET: DWGCOVER2

GENERAL NOTES:

1. MATERIALS — ASTM DESCRIPTION

MATERIALS	ASTM DESCRIPTION
STRUCTURAL STEEL PLATE	A529 / A572 / A1011
HOT ROLLED MILL SHAPES	A36 / A529 / A500
HHS ROUND	A500
HHS RECTANGULAR	A500
COLD FORM SHAPES	A653 / A1011
ROOF AND WALL SHEETING	A653 / A792
BOLTS	A307 / A325 / A490
CABLE	A475
RODS	A529 / A572

2. STRUCTURAL PRIMER NOTE:

SHOP COAT PRIMER IS INTENDED TO PROTECT THE STEEL FRAMING FOR A SHORT PERIOD OF TIME. STORAGE IN EXTREME COLD TEMPERATURES OR WINTER SNOW CONDITIONS, INCLUDING TRANSPORTATION ON SALTED OR CHEMICALLY TREATED ROADS WILL ADVERSELY AFFECT THE DURABILITY AND LONGEVITY OF THE PRIMER. THE COAT OF SHOP PRIMER DOES NOT PROVIDE THE UNIFORMITY OF APPEARANCE, OR THE DURABILITY AND CORROSION RESISTANCE OF A FIELD APPLIED FINISH COAT OF PAINT OVER A SHOP PRIMER. MINOR ABRASIONS TO THE SHOP COAT PRIMER CAUSED BY HANDLING, LOADING, SHIPPING, UNLOADING AND ERECTION ARE UNAVOIDABLE AND ARE NOT THE RESPONSIBILITY OF THE METAL BUILDING MANUFACTURER. METAL BUILDING MANUFACTURER IS NOT RESPONSIBLE FOR THE DETERIORATION OF THE PRIMER OR CORROSION THAT MAY RESULT FROM ATMOSPHERIC AND ENVIRONMENTAL CONDITIONS NOR THE COMPATIBILITY OF THE PRIMER TO ANY FIELD APPLIED COATING.

3. BUILDING ERECTION NOTES:

THE GENERAL CONTRACTOR AND/OR ERECTOR IS RESPONSIBLE TO SAFELY AND PROPERLY ERECT THE METAL BUILDING SYSTEM IN CONFORMANCE WITH THESE DRAWINGS, OSHA REQUIREMENTS, AND EITHER MBMA OR CSA S16 STANDARDS PERTAINING TO PROPER ERECTION. TEMPORARY SUPPORTS SUCH AS GUYS, BRACES, FALSEWORK, CRIBBING OR OTHER ELEMENTS FOR ERECTION ARE TO BE DETERMINED, FURNISHED AND INSTALLED BY THE ERECTOR. THESE SUPPORTS MUST SECURE THE STEEL FRAMING, OR PARTLY ASSEMBLED STEEL FRAMING, AGAINST LOADS COMPARABLE IN INTENSITY TO THOSE FOR WHICH THE STRUCTURE WAS DESIGNED IN ADDITION TO LOADS RESULTING FROM THE ERECTION OPERATION. SECONDARY WALL AND ROOF FRAMING (PURLINS, GIRTS AND/OR JOIST) ARE NOT DESIGNED TO FUNCTION AS A WORKING PLATFORM OR TO PROVIDE AS AN ANCHORAGE POINT FOR A FALL ARREST /SAFETY TIE OFF.

4. SPECIAL INSPECTION:

SPECIAL INSPECTIONS AND TESTING THAT MAY BE REQUIRED BY GOVERNMENTAL OR OTHER AUTHORITY DURING CONSTRUCTION AND/OR STEEL FABRICATION (COLLECTIVELY, "INSPECTIONS") ARE NOT THE RESPONSIBILITY OF THE PEMB MANUFACTURER, AND TO THE EXTENT REQUIRED IT SHALL BE THE RESPONSIBILITY OF THE OWNER AND/OR THE OWNER'S REPRESENTITIVE. IN THE EVENT INSPECTIONS ARE REQUIRED, THE OWNER AND/OR THE OWNER'S REPRESENTITIVE SHALL EMPLOY A THIRD PARTY QUALITY ASSURANCE TESTING AGENCY APPROVED BY THE RELEVANT AUTHORITY. IF SUCH REQUIREMENTS ARE NOT SPECIFICALLY INCLUDED IN THE PEMB MANUFACTURER'S SALES DOCUMENTS, NO INSPECTIONS BY THE PEMB MANUFACTURER OR AT THE PEMB MANUFACTURER'S FACILITY SHALL BE MADE. THE PEMB MANUFACTURER'S FACILITIES ARE ACCREDITED BY IAS AC472.

5. A325 & A490 BOLT TIGHTENING REQUIREMENTS:

IT IS THE RESPONSIBILITY OF THE ERECTOR TO ENSURE PROPER BOLT TIGHTNESS IN ACCORDANCE WITH APPLICABLE REGULATIONS. FOR PROJECTS IN THE UNITED STATES, SEE THE RCSC SPECIFICATION FOR STRUCTURAL JOINTS USING A325 OR A490 BOLTS OR FOR PROJECTS IN CANADA, SEE THE CAN/CSA S16 LIMIT STATES DESIGN OF STEEL STRUCTURES FOR MORE INFORMATION.

THE FOLLOWING CRITERIA MAY BE USED TO DETERMINE THE BOLT TIGHTNESS (I.E., "SNUG-TIGHT" OR "FULLY-PRETENSIONED"), UNLESS REQUIRED OTHERWISE BY LOCAL JURISDICTION OR CONTRACT REQUIREMENTS:

A) ALL A490 BOLTS SHALL BE "FULLY-PRETENSIONED".
B) ALL A325 BOLTS IN PRIMARY FRAMING (RIGID FRAMES AND BRACING) MAY BE "SNUG-TIGHT", EXCEPT AS FOLLOWS: "FULLY-PRETENSION" A325 BOLTS IF:
  a) BUILDING SUPPORTS A CRANE SYSTEM WITH A CAPACITY GREATER THAN 5 TONS.
  b) BUILDING SUPPORTS MACHINERY THAT CREATES VIBRATION, IMPACT, OR STRESS-REVERSALS ON THE CONNECTIONS. THE ENGINEER-OF-RECORD FOR THE PROJECT SHOULD BE CONSULTED TO EVALUATE FOR THIS CONDITION.
  c) THE PROJECT SITE IS LOCATED IN A HIGH SEISMIC AREA. FOR IBC-BASED CODES, "HIGH SEISMIC AREA" IS DEFINED AS "SEISMIC DESIGN CATEGORY" OF 'D', 'E', OR 'F'. SEE THE "BUILDING LOADS" SECTION ON THIS PAGE FOR THE DEFINED SEISMIC DESIGN CATEGORY FOR THIS PROJECT.
  d) ANY CONNECTION DESIGNATED IN THESE DRAWINGS AS "A325-SC". "SLIP-CRITICAL (SC)" CONNECTIONS MUST BE FREE OF PAINT, OIL, OR OTHER MATERIALS THAT REDUCE FRICTION AT CONTACT SURFACES. GALVANIZED OR LIGHTLY-RUSTED SURFACES ARE ACCEPTABLE.
C) IN CANADA, ALL A325 AND A490 BOLTS SHALL BE "FULLY-PRETENSIONED", EXCEPT FOR SECONDARY MEMBERS (PURLINS, GIRTS, OPENING FRAMING, ETC.) AND FLANGE BRACES.

SECONDARY MEMBERS (PURLINS, GIRTS, OPENING FRAMING, ETC.) AND FLANGE BRACE CONNECTIONS MAY ALWAYS BE "SNUG-TIGHT", UNLESS INDICATED OTHERWISE IN THESE DRAWINGS.

6. GENERAL DESIGN NOTES:

1) ALL STRUCTURAL STEEL SECTIONS AND WELDED PLATE MEMBERS ARE DESIGNED IN ACCORDANCE WITH ANSI/AISC 360 "SPECIFICATIONS FOR STRUCTURAL STEEL BUILDINGS" OR THE CAN/CSA S16 "LIMIT STATES DESIGN OF STEEL STRUCTURES", AS REQUIRED BY THE SPECIFIED BUILDING CODE.
2) ALL WELDING OF STRUCTURAL STEEL IS BASED ON EITHER AWS D1.1 "STRUCTURAL WELDING CODE – STEEL" OR CAN/CSA W59 "WELDED STEEL CONSTRUCTION (METAL ARC WELDING)", AS REQUIRED BY THE SPECIFIED BUILDING CODE.
3) ALL COLD FORMED MEMBERS ARE DESIGNED IN ACCORDANCE WITH ANSI/AISI S100 OR CAN/CSA S136 "SPECIFICATIONS FOR THE DESIGN OF COLD FORMED STEEL STRUCTURAL MEMBERS", AS REQUIRED BY THE SPECIFIED BUILDING CODE.
4) ALL WELDING OF COLD FORMED STEEL IS BASED ON AWS D1.3 "STRUCTURAL WELDING CODE – SHEET STEEL" OR CAN/CSA W59 "WELDED STEEL CONSTRUCTION (METAL ARC WELDING)", AS REQUIRED BY THE SPECIFIED BUILDING CODE.
5) ALL NUCOR BUILDING GROUP FACILITIES ARE IAS AC-472 ACCREDITED FOR DESIGN AND FABRICATION OF METAL BUILDING SYSTEMS. FOR PROJECTS IN CANADA, DESIGN AND FABRICATION ARE DONE ONLY IN FACILITIES THAT ARE ALSO CAN/CSA A660 AND W47.1 CERTIFIED.
6) IF JOISTS ARE INCLUDED WITH THIS PROJECT, THEY ARE SUPPLIED AS A PART OF THE SYSTEMS ENGINEERED METAL BUILDING AND ARE FABRICATED IN ACCORDANCE WITH THE REQUIREMENTS OF SECTION 1926.758 OF THE OSHA SAFETY STANDARDS FOR STEEL ERECTION, DATED JANUARY 18, 2001.
7) COLUMN BASE PLATES ARE DESIGNED NOT TO EXCEED THE ALLOWABLE BEARING STRESS OF CONCRETE THAT HAS A MINIMUM COMPRESSIVE STRENGTH OF 3000 P.S.I. AT 28 DAYS.

BUILDING INFORMATION

PRIMER COLORS

PRIMARY PRIMER COLOR: RED SECONDARY PRIMER COLOR: RED

ROOF SHEETING

TYPE: 4" IMP CFR42/LS360 GAUGE: 24 FINISH: TERRA COTTA – PVDF CLIP TYPE: SLIDING/SHORT
THERMAL BLOCKS: No EPS FOAM SPACER: YES (LS360 ONLY) ROOF LINE TRIM, PAINTED: TERRA COTTA – PVDF

YES☒ NO☐ DOWNSPOUTS PAINTED: TERRA COTTA – PVDF GUTTERS PAINTED: TERRA COTTA – PVDF
YES☐ NO☒ INSULATION ____ (NOT BY MBS)
YES☐ NO☒ PIPE JACKS, SIZE: ____ QUANTITY: ____
YES☐ NO☒ RIDGE VENTS, 10'-0" LONG X 9" THROAT. QUANTITY: ____
YES☐ NO☒ ROOF FRAMED OPENINGS, SEE ROOF FRAMING PLAN FOR SIZES
YES☐ NO☒ COMPOSITE CFR DECK, TYPE: ____ GAUGE: ____ FINISH: ____

WALL SHEETING

TYPE: 2.5" SANTA FE GAUGE: 24 FINISH: DESERT SAND – PVDF
CORNER TRIM, PAINTED: DESERT SAND – PVDF BASE TRIM, PAINTED: SURREY BEIGE – PVDF

YES☐ NO☒ WALKDOORS, QUANTITY: ____ PAINTED: ____
YES☐ NO☒ WINDOWS, QUANTITY: ____ PAINTED: ____
YES☐ NO☒ INSULATION ____ (NOT BY MBS)

WALL FRAMED OPENINGS

YES☒ NO☐ FRAMED OPENING TRIM, PAINTED: SURREY BEIGE – PVDF

SIZES:
- FSW: (5) 14'-0" x 14'-0"; (1) 4'-4" x 7'-2"
- BSW: (2) 4'-4" x 7'-2"; (5) 14'-0" x 14'-0"
- LEW: (2) 10'-0" x 7'-6"; (1) 4'-4" x 7'-2"
- REW: (2) 4'-0" x 4'-0" SILL @ 3'-2"; (1) 3'-4" x 7'-2"; (1) 3'-10" x 7'-2"

BUILDING OPTIONS

YES☐ NO☒ LINER PANELS
FRAMED OPENING TRIM, PAINTED: ____
WALL: TYPE: ____ GAUGE: ____ FINISH: ____ WALL TRIM, PAINTED: ____
CEILING: TYPE: ____ GAUGE: ____ FINISH: ____

YES☐ NO☒ TRANSLUCENT PANELS
WALL: ____
ROOF: ____
INSULATED PANELS? YES☐ NO☐

YES☐ NO☒ EAVE EXTENSION
PROJ: ____ TYPE: ____ GAUGE: ____ FINISH: ____ SOFFIT TRIM AT BUILDING LINE PAINTED: ____

YES☐ NO☒ RAKE EXTENSION
PROJ: ____ TYPE: ____ GAUGE: ____ FINISH: ____ SOFFIT TRIM AT BUILDING LINE PAINTED: ____

YES☐ NO☒ CANOPY
AT EAVE LINE ☐ BELOW EAVE ☐ PROJECTION: ____ CLEAR UNDER CANOPY BEAM: ____
ROOF PANEL: TYPE: ____ ___GAUGE, FINISH: ____
SOFFIT PANEL: TYPE: ____ ___GAUGE, FINISH: ____ SOFFIT TRIM AT BUILDING LINE PAINTED: ____

YES☐ NO☒ PARTITION WALLS
WALL PANEL: TYPE: ____ ___GAUGE, FINISH: ____ TRIM PAINTED: ____

YES☒ NO☐ WAINSCOT
WALL PANEL: TYPE: 2.5" SANTA FE 24 GAUGE, FINISH: SURREY BEIGE – PVDF TOP TRANSITION TRIM PAINTED: DESERT SAND – PVDF
BASE TRIM PAINTED: SURREY BEIGE – PVDF JAMB TRIM PAINTED: SURREY BEIGE – PVDF BOTTOM TRANS. TRIM PAINTED: SURREY BEIGE – PVDF

YES☐ NO☒ FASCIA
PROJ: ____ TOP OF FASCIA HEIGHT: ____
FACE PANEL, TYPE: ____ ___GAUGE, FINISH: ____ CAP TRIM PAINTED: ____
BACK PANEL, TYPE: ____ ___GAUGE, FINISH: ____ BASE TRIM PAINTED: ____
☐ CLOSED SYSTEM, CLEAR UNDER SOFFIT TRIM: ____
SOFFIT PANEL, TYPE: ____ ___GAUGE, FINISH: ____ SOFFIT TRIM AT BUILDING LINE PAINTED: ____
☐ OPEN SYSTEM, (NO SOFFIT PANEL PROVIDED) CLEAR UNDER SOFFIT TRIM: ____

YES☐ NO☒ PARAPET
☐ STRUCTURAL PARAPET ☐ NON-STRUCTURAL PARAPET TOP OF PARAPET HEIGHT: ____
BACK PANEL, TYPE: ____ ___GAUGE, FINISH: ____

YES☐ NO☒ CRANES (SEE CRANE PLAN FOR ADDITIONAL INFORMATION)
YES☐ NO☒ MEZZANINE (SEE MEZZANINE PLAN FOR ADDITIONAL INFORMATION)

THE DRAWINGS AND THE METAL BUILDING THEY REPRESENT ARE THE PRODUCT OF THE METAL BUILDING MANUFACTURER. THE REGISTERED PROFESSIONAL ENGINEER'S SEAL PERTAINS ONLY TO THE REQUIREMENTS LISTED HEREIN FOR THE MATERIALS DESIGNED AND SUPPLIED BY THE METAL BUILDING MANUFACTURER. THE REGISTERED PROFESSIONAL ENGINEER WHOSE SEAL APPEARS ON THESE DRAWINGS IS EMPLOYED OR ENGAGED BY THE METAL BUILDING MANUFACTURER AND DOES NOT SERVE AS OR REPRESENT THE PROJECT ENGINEER OF RECORD AND SHALL NOT BE CONSTRUED AS SUCH.

7. GLOSSARY OF ABBREVIATIONS:

A.B. = ANCHOR BOLTS
BS = BOTH SIDES
B.U. = BUILT-UP
DIA = DIAMETER
FLG = FLANGE
F.S = FAR SIDE
GA. = GAUGE
H.S.B. = HIGH STRENGTH BOLTS
HT. = HEIGHT
LLV = LONG LEG VERTICAL
MAX = MAXIMUM
M.B. = MACHINE BOLTS
MBS = METAL BUILDING SUPPLIER
TBD = TO BE DETERMINED
N/A = NOT APPLICABLE
NIC = NOT IN CONTRACT
SLV = SHORT LEG VERTICAL
O.A.L. = OVERALL LENGTH
O.C. = ON CENTER
U.N.O. = UNLESS NOTED OTHERWISE
REQ'D = REQUIRED
REV. = REVISION
SIM = SIMILAR
SL = STEEL LINE
N.S. = NEAR SIDE
MIN = MINIMUM
TYP = TYPICAL
PL = PLATE
PEMB = PRE-ENGINEERED METAL BUILDING MANUFACTURER
?? = PART MARK TO BE DETERMINED AND WILL BE UPDATED ON CONSTRUCTION DRAWINGS

NUCOR BUILDING SYSTEMS
A DIVISION OF NUCOR CORPORATION

MBMA MEMBER · IAS ACCREDITED Metal Building Systems AC 472 · CSSBI · CWB CERTIFIED CSA W47.1 · CWB CERTIFIED CSA A660

BUILDING LOADS

DESIGN CODE: IBC 2018

ROOF LIVE LOAD: 20.00 PSF RISK CATEGORY: IV
LIVE LOAD REDUCIBLE Yes

GROUND SNOW LOAD: 30.0 PSF SNOW EXP. FACTOR, Ce: 1.00
SNOW IMPORTANCE FACTOR, Is: 1.20

RAINFALL INTENSITY (IN/HR): 4.00
WIND: 115 / 89 MPH (Vult) / (Vasd)

C & C PRESSURES (PSF): 32 / -43
EXPOSURE: C
UL 90 NO
Classic Roof-Const. No. **161** ; **Classic** Roof w/ Translucent Panel-Const. No. **167**
CFR Roof-Const. No. **552** ; **CFR** Roof w/ Translucent Panel-Const. No. **590** ;
Composite CFR Roof-Const. No. **552A** ; **VR16 II** Roof-Const. No. **332** .

SEISMIC INFORMATION Ss: 0.327 S1: 0.114
Design Sds/Sd1: 0.335 / 0.180 Site Class: D
Seismic Imp. Factor: 1.50 Seismic Design Category: D
Analysis Procedure: Equivalent Lateral Force Method
LONG SFRS: Ord. Concentrically Braced Frame
LAT SFRS: Ord. Moment Frame

NOTES:
1) COLLATERAL DEAD LOADS, UNLESS OTHERWISE NOTED, ARE ASSUMED TO BE UNIFORMLY DISTRIBUTED. WHEN SUSPENDED SPRINKLER SYSTEMS, LIGHTING, HVAC EQUIPMENT, CEILINGS, ETC., ARE SUSPENDED FROM ROOF MEMBERS, CONSULT THE M.B.S. IF THESE CONCENTRATED LOADS EXCEED 500 POUNDS (USING THE WEB MOUNT DETAIL) OR 200 POUNDS (USING THE FLANGE MOUNT DETAIL), OR IF INDIVIDUAL MEMBERS ARE LOADED SIGNIFICANTLY MORE THAN OTHERS.

2) THE DESIGN OF STRUCTURAL MEMBERS SUPPORTING GRAVITY LOADS IS CONTROLLED BY THE MORE CRITICAL EFFECT OF ROOF LIVE LOAD OR ROOF SNOW LOAD, AS DETERMINED BY THE APPLICABLE CODE.

3) Pm IS BASED ON THE MINIMUM ROOF SNOW LOAD CALCULATED PER BUILDING CODE OR THE CONTRACT SPECIFIED SNOW LOAD, WHICHEVER IS GREATER. THIS VALUE, Pm, IS ONLY APPLIED IN COMBINATION WITH THE DEAD AND COLLATERAL LOADS. ROOF SNOW IN OTHER LOADING CONDITIONS IS DETERMINED PER THE SPECIFIED BUILDING CODE.

	BUILDING		
ROOF DEAD (PSF):	4.25	ROOF SNOW Pm (PSF):	24.00
PRI. COL. (PSF):	5.00	WIND ENCLOSURE:	Enclosed
SEC. COL. (PSF):	5.00	GCpi:	+/-0.18
SNOW Ct:	1.00	SEISMIC R:	3.25
SNOW Cs:	1.00	SEISMIC Cs:	0.155
ROOF SNOW Ps (PSF):	25.20	BASE SHEAR (KIPS):	22.96

DRAWING INDEX

COVERSHEET C1, C2
ANCHOR BOLT DRAWINGS AB1, AB2
STRUCTURAL/SHEETING DRAWINGS E1 – E12
DETAILS D1 – D20

ISSUE	DWN	CHK	ENG	PE	DATE
CONST. AB PLAN	NBS	EOP	CBM		7/24/2023
BUILDING DEPARTMENT REVIEW	MBS	DAN	CBM		7/31/2023

NUCOR BUILDING SYSTEMS
305 INDUSTRIAL PARKWAY, WATERLOO, IN 46793
PHONE: (260) 837-7891 FAX: (260) 837-7384
PO BOX 1006, 200 WHETSTONE RD, SWANSEA, SC 29160
PHONE: (803) 568-2100 FAX: (803) 568-2121
600 APACHE TRAIL, TERRELL, TX 75160
PHONE: (972) 524-5407 FAX: (972) 524-5417
1050 WATERY LANE, BRIGHAM CITY, UT 84302
PHONE: (435) 919-3100 FAX: (435) 919-3101

PROJECT NAME: WENDOVER FS #13 REPLACEMENT, WENDOVER, NV
CUSTOMER NAME: MICHAEL CLAY CORP, WINNEMUCCA, NV
JOB NUMBER: U23G0555A
SHEET TITLE

PROFESSIONAL ENGINEER – STATE OF NEVADA — RUSSELL R. SKEEM — CIVIL/STRUCTURAL — No. 016713
07/31/2023
Exp. Jun 30, 2024

This seal pertains only to the materials designed and supplied by Nucor Building Systems, a division of Nucor Corporation. The drawings and the metal buildings which they represent are the product of Nucor Building Systems. The register professional engineer whose seal appears on these drawings is employed by Nucor Buildings Systems and does not serve as or represent the project engineer of record and shall not be construed as such.

SHEET: C1 of 2

THE BUILDING CODE REQUIRES CONSIDERATION OF SNOW SURCHARGES FOR ANY LOWER ROOF OF A STRUCTURE LOCATED WITHIN 20 ft. OF A HIGHER STRUCTURE. INFORMATION PROVIDED TO THE METAL BUILDING MANUFACTURER DOES NOT INDICATE THE PRESENCE OF A SHADOWING STRUCTURE WITHIN THIS 20 ft. ENVELOPE, THEREFORE SNOW SURCHARGES HAVE NOT BEEN CONSIDERED IN THE DESIGN.	BCL9
ACCESSORIES (DOORS, WINDOWS, ETC.) NOT PROVIDED BY THE METAL BUILDING MANUFACTURER MUST BE DESIGNED AS "COMPONENTS AND CLADDING" IN ACCORDANCE WITH THE SPECIFIC WIND PROVISIONS OF THE REFERENCED BUILDING CODE DISPLAYED ON THE COVER PAGE OF THIS DRAWING PACKET.	MO1
FRAMED OPENINGS HAVE BEEN DESIGNED TO SUPPORT WIND LOAD NORMAL TO THE WALL BASED ON THE STANDARD BUILDING CODE CRITERIA. FRAMED OPENINGS HAVE NOT BEEN DESIGNED FOR ANY ADDITIONAL MOMENT OR CATENARY FORCES FROM THE DOOR. ANY CHANGE TO THE INFORMATION SHOWN HERE WILL REQUIRE AN ENGINEERING INVESTIGATION AND POSSIBLE BUILDING REINFORCEMENT.	MO2

THE NEW BUILDING IS IN PROXIMITY TO, AND MAY CAUSE CHANGES TO THE CODE-PRESCRIBED SNOW LOADING CONDITIONS FOR THE EXISTING ADJACENT/ADJOINING BUILDING(S). IT IS THE RESPONSIBILITY OF OTHERS (NOT THE METAL BUILDING MANUFACTURER) TO INVESTIGATE ALL SNOW LOADING CONDITIONS FOR THE ADJACENT/ADJOINING BUILDING(S), AND PERFORM ANY REQUIRED ANALYSIS.	EB1
THE EXISTING BUILDING AND THE NEW BUILDING BY THE METAL BUILDING MANUFACTURER ARE STRUCTURALLY INDEPENDENT. THE SEISMIC STORY DRIFT OF THE NEW BUILDING CALCULATED IN ACCORDANCE WITH THE APPLICABLE BUILDING CODE IS 3.00 INCHES. THE METAL BUILDING MANUFACTURER CANNOT DETERMINE THE STORY DRIFT OF THE EXISTING BUILDING. THEREFORE, IT IS THE RESPONSIBILITY OF OTHERS (NOT THE METAL BUILDING MANUFACTURER) TO ENSURE THAT ADEQUATE SEPARATION EXISTS BETWEEN THE NEW AND EXISTING BUILDING.	EB6
THE SPECIFIED HVCF IN THE CONTRACT IS NOT TO EXCEED THE 300 LBS QUOTED AND DESIGNED FOR. IF IT DOES, A REVIEW AND POSSIBLE REDESIGN WILL BE NECESSARY.	SPECIAL NOTE–1

ISSUE	DWN	CHK	ENG	PE	DATE
CONST. AB PLAN	NBS	EOP	CBM		7/24/2023
BUILDING DEPARTMENT REVIEW	WBS	DAN	CBM		7/31/2023

NUCOR BUILDING SYSTEMS
300 INDUSTRIAL PARKWAY, WATERLOO, IN 46793
PHONE: (260) 837-7891 FAX: (260) 837-7384
PO BOX 1006, 200 WHETSTONE RD, SWANSEA, SC 29160
PHONE: (803) 568-2100 FAX: (803) 568-2121
600 APACHE TRAIL, TERRELL, TX 75160
PHONE: (972) 524-4500 FAX: (972) 524-4417
1050 WATER LANE, BRIGHAM CITY, UT 84302
PHONE: (435) 919-3100 FAX: (435) 919-3101

PROJECT NAME
WENDOVER FS #13 REPLACEMENT
WENDOVER, NV

CUSTOMER NAME
MICHAEL CLAY CORP
WINNEMUCCA, NV

JOB NUMBER
U23G0555A

SHEET TITLE

PROFESSIONAL ENGINEER – STATE OF UTAH
RUSSELL R. SKEEM
07/31/2023
Exp. Jun 30, 2024
CIVIL/STRUCTURAL
No. 0167[illegible]

This set of plans prepared by the materials designated and owned by Nucor Building Systems, a division of Nucor Corporation. The drawings and the materials shown thereon, are and are the product of Nucor Building Systems and are not to be used on those drawings is employed by Nucor Buildings Systems and does not serve as a record and shall not be construed as such.

SHEET
C2 of 2

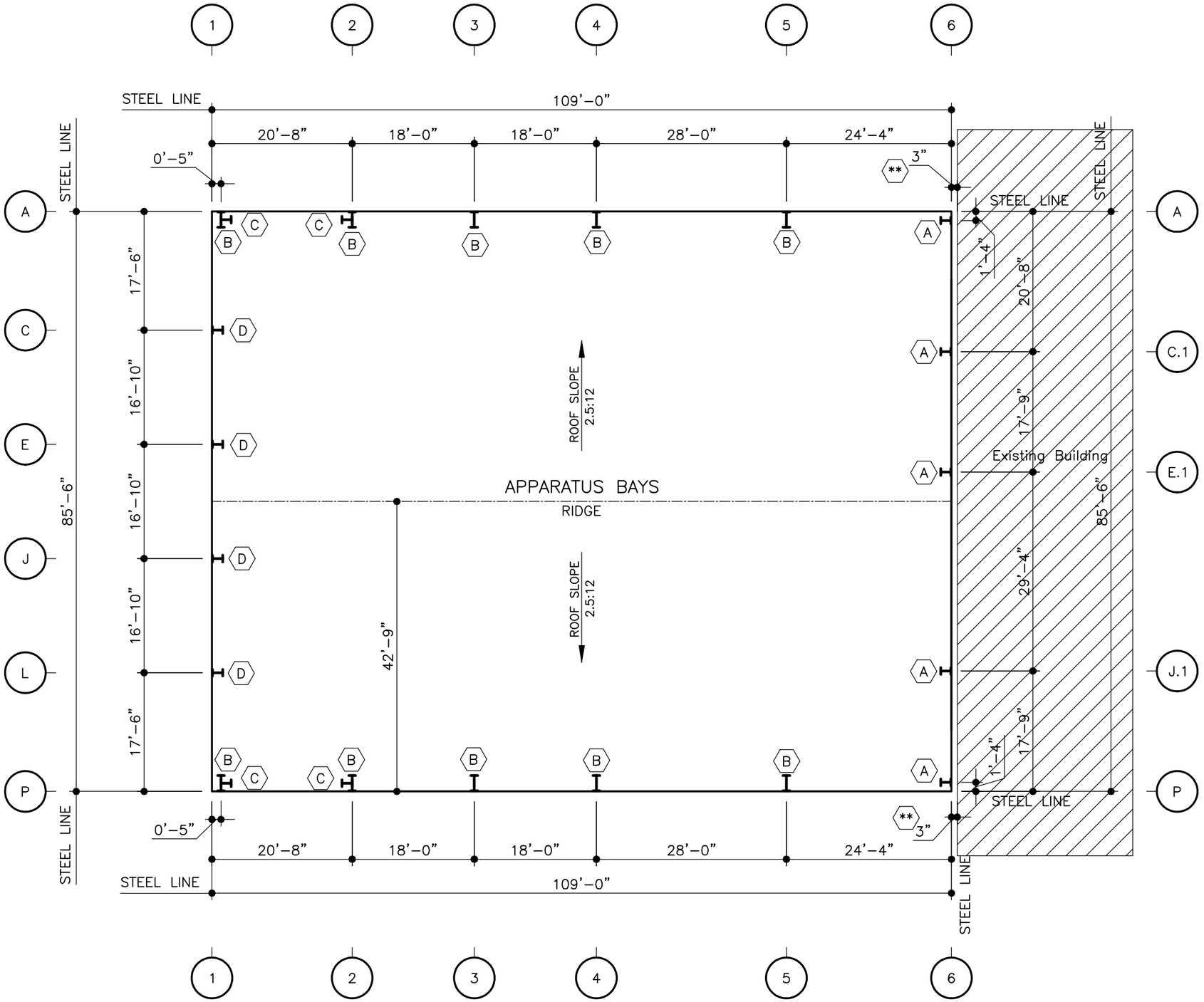

FINISH FLOOR = 100'-0"
BOTTOM OF BASE PLATE = 100'-0"
(UNLESS NOTED OTHERWISE)

ANCHOR BOLT SCHEDULE

QUANTITY	SIZE	MAT'L	PROJECTION
36	3/4"	Gr 55	3" FROM BOTTOM OF BPL
56	1"	Gr 55	3" FROM BOTTOM OF BPL
---	---	---	3" FROM BOT. OF BPL
---	---	---	3" FROM BOT. OF BPL
---	---	---	3" FROM BOT. OF BPL

THE EXISTING BUILDING AND THE NEW BUILDING BY THE METAL BUILDING MANUFACTURER ARE STRUCTURALLY INDEPENDENT. THE SEISMIC STORY DRIFT OF THE NEW BUILDING CALCULATED IN ACCORDANCE WITH THE APPLICABLE BUILDING CODE IS 3.00 INCHES. THE METAL BUILDING MANUFACTURER CANNOT DETERMINE THE STORY DRIFT OF THE EXISTING BUILDING. THEREFORE, IT IS THE RESPONSIBILITY OF OTHERS (NOT THE METAL BUILDING MANUFACTURER) TO ENSURE THAT ADEQUATE SEPARATION EXISTS BETWEEN THE NEW AND EXISTING BUILDING.

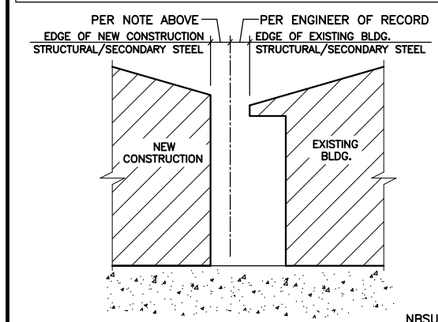

TYPICAL SEISMIC SEPARATION DETAIL (**)

ISSUE	DWN	CHK	ENG	PE	DATE
CONST. AB PLAN	NBS	EOP	CBM		7/24/2023
BUILDING DEPARTMENT REVIEW	WBS	DAN	CBM		7/31/2023

NUCOR BUILDING SYSTEMS
300 INDUSTRIAL PARKWAY, WATERLOO, IN 46793
PHONE: (260) 837-7891 FAX: (260) 837-7384
PO BOX 1005, 200 WHETSTONE RD, SWANSEA, SC 29160
PHONE: (803) 568-2100 FAX: (803) 568-2121
600 APACHE TRAIL, TERRELL, TX 75160
PHONE: (972) 524-4400 FAX: (972) 524-4417
1050 WATER LANE, BRIGHAM CITY, UT 84302
PHONE: (435) 919-3100 FAX: (435) 919-3101

PROJECT NAME: WENDOVER FS #13 REPLACEMENT
WENDOVER, NV

CUSTOMER NAME: MICHAEL CLAY CORP
WINNEMUCCA, NV

JOB NUMBER: U23G0555A

SHEET TITLE

RUSSELL R. SKEEN
07/31/2023
Exp. Jun 30, 2024
CIVIL/STRUCTURAL

This set of plans only to the materials and methods described in Nucor Building Systems' drawings. The drawings and the information shown thereon are the product of Nucor Building Systems' regular professional services and are copyrighted. Neither these drawings is employed by Nucor Buildings Systems and does not serve as a representation of the engineer of record and shall not be construed as such.

SHEET

AB1 of 2

ANCHOR BOLT PLAN

GENERAL NOTES

1. THE SPECIFIED ANCHOR ROD DIAMETER ASSUMES F1554 GRADE 55 UNLESS NOTED OTHERWISE. ANCHOR ROD MATERIAL OF EQUAL DIAMETER MEETING OR EXCEEDING THE STRENGTH REQUIREMENTS SET FORTH ON THESE DRAWINGS MAY BE UTILIZED AT THE DISCRETION OF THE FOUNDATION DESIGN ENGINEER. ANCHOR ROD EMBEDMENT LENGTH SHALL BE DETERMINED BY THE FOUNDATION DESIGN ENGINEER.
2. THE METAL BUILDING MFR. IS NOT RESPONSIBLE FOR PROJECT FOUNDATION DESIGN. THE FOUNDATION DESIGN IS THE RESPONSIBILITY OF A REGISTERED PROFESSIONAL ENGINEER, FAMILIAR WITH LOCAL SITE CONDITIONS.
3. ALL ANCHOR RODS, FLAT WASHERS FOR ANCHOR RODS, EXPANSION BOLTS, AS WELL AS ALL CONCRETE/MASONRY EMBED PLATES ARE NOT BY THE METAL BUILDING MFR.
4. THIS DRAWING IS NOT TO SCALE.
5. FINISHED FLOOR ELEVATION = 100'-0" UNLESS NOTED OTHERWISE.
6. "SINGLE" CEE COLUMNS SHALL BE ORIENTED WITH THE "TOES" TOWARD THE LOW EAVE UNLESS NOTED OTHERWISE.
7. THE ANCHOR BOLT LOCATIONS PROVIDED BY THE METAL BUILDING MANUFACTURER SATISFY ANY PERTINENT REQUIREMENTS FOR THE DESIGN OF THE MATERIALS SUPPLIED BY THE METAL BUILDING MANUFACTURER. PLEASE NOTE THAT THESE REQUIREMENTS MAY NOT SATISFY ALL ANCHOR BOLT CONCRETE EDGE DISTANCE REQUIREMENTS DEPENDING ON THE DETAILS OF THE FOUNDATION DESIGN. BECAUSE FOUNDATION DESIGN IS NOT WITHIN THE SCOPE OF WORK OF THE METAL BUILDING MANUFACTURER, IT IS THE RESPONSIBILITY OF THE QUALIFIED PROFESSIONAL DESIGNING THE FOUNDATION TO VERIFY THAT SUFFICIENT CONCRETE EDGE DISTANCE IS PROVIDED FOR THE ANCHOR BOLTS IN THE DETAILS THEREOF.
8. THE ANCHOR BOLT SETTINGS SHOWN ON THESE DRAWINGS NOT ONLY INDICATE WHERE THE ANCHOR BOLTS ARE TO BE PLACED, BUT ALSO THE FOOTPRINT OF THE METAL BUILDING. IT IS ESSENTIAL THAT THESE BOLT PATTERNS BE FOLLOWED. IN THE EVENT THAT THESE SETTINGS DIFFER FROM THE ARCHITECTURAL FOUNDATION PLANS, THE METAL BUILDING MANUFACTURER MUST BE CONTACTED IMMEDIATELY, PREFERABLY BEFORE CONCRETE IS PLACED.

– CROSS BRACING

BERTNOTE

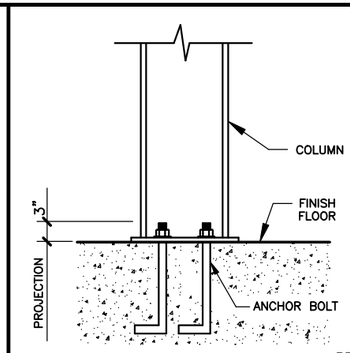

BPFFNG

TYPICAL COLUMN BASE PLATE DETAIL

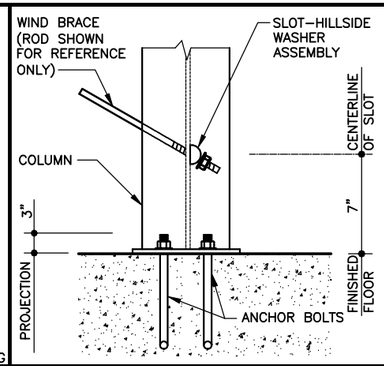

TYPICAL COLUMN BASE PLATE DETAIL AT SLOT–HILLSIDE WASHER LOCATION

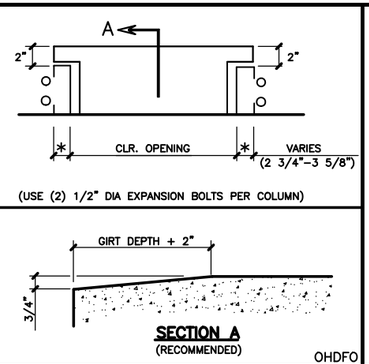

OHDFO

TYPICAL OVERHEAD DOOR FRAMED OPENING

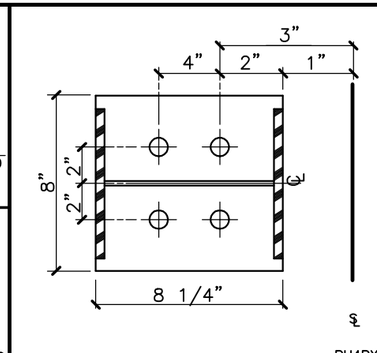

BU4RX

A | (4) 3/4" ø ANCHOR BOLTS WITH A 3" PROJECTION

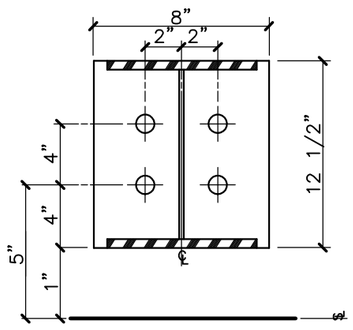

BU4BX

B | (4) 1" ø ANCHOR BOLTS WITH A 3" PROJECTION

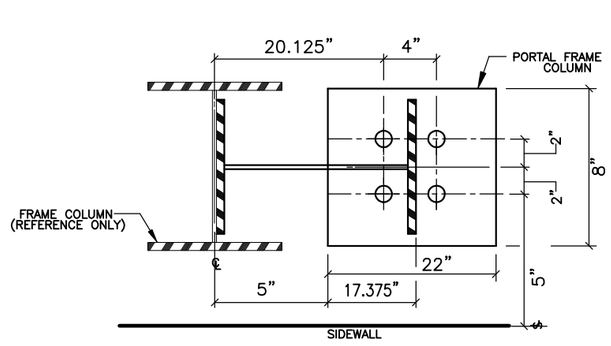

PortalNBR

C | PORTAL COLUMN | (4) 1" ø ANCHOR BOLTS WITH A 3" PROJECTION

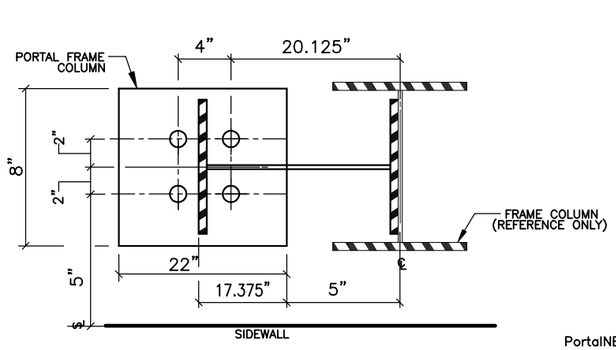

PortalNBL

C | PORTAL COLUMN | (4) 1" ø ANCHOR BOLTS WITH A 3" PROJECTION

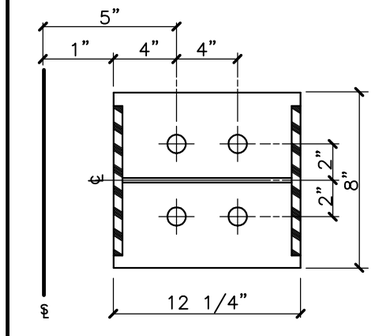

BU4LX

D | (4) 3/4" ø ANCHOR BOLTS WITH A 3" PROJECTION

ISSUE	DWN	CHK	ENG	PE	DATE
CONST. AB PLAN	NBS	EOP	CBM		7/24/2023
BUILDING DEPARTMENT REVIEW	NBS	DAN	CBM		7/31/2023

NUCOR BUILDING SYSTEMS
300 INDUSTRIAL PARKWAY, WATERLOO, IN 46793
PHONE: (260) 837-7891 FAX: (260) 837-7384
PO BOX 1006, 200 WHETSTONE RD, SWANSEA, SC 29160
PHONE: (803) 568-2100 FAX: (803) 568-2121
600 APACHE TRAIL, TERRELL, TX 75160
PHONE: (972) 524-4444 FAX: (972) 524-4417
1050 WATER LANE, BRIGHAM CITY, UT 84302
PHONE: (435) 919-3100 FAX: (435) 919-3101

PROJECT NAME: WENDOVER FS #13 REPLACEMENT
WENDOVER, NV

CUSTOMER NAME: MICHAEL CLAY CORP
WINNEMUCCA, NV

JOB NUMBER: U23G0555A

SHEET TITLE

PROFESSIONAL ENGINEER – STATE OF NEVADA
RUSSELL R. SKEEM
07/31/2023
Exp. Jun 30, 2024
CIVIL/STRUCTURAL
NO. 015713

This set contains and is subject to the materials and designs created by Nucor Building Systems, a division of Nucor Corporation. The drawings and the materials and designs contained therein are the property of Nucor Building Systems and may not be used on these drawings is employed by Nucor Buildings Systems and does not serve as a certification that the engineer of record and shall not be construed as such.

SHEET

AB2 of 2

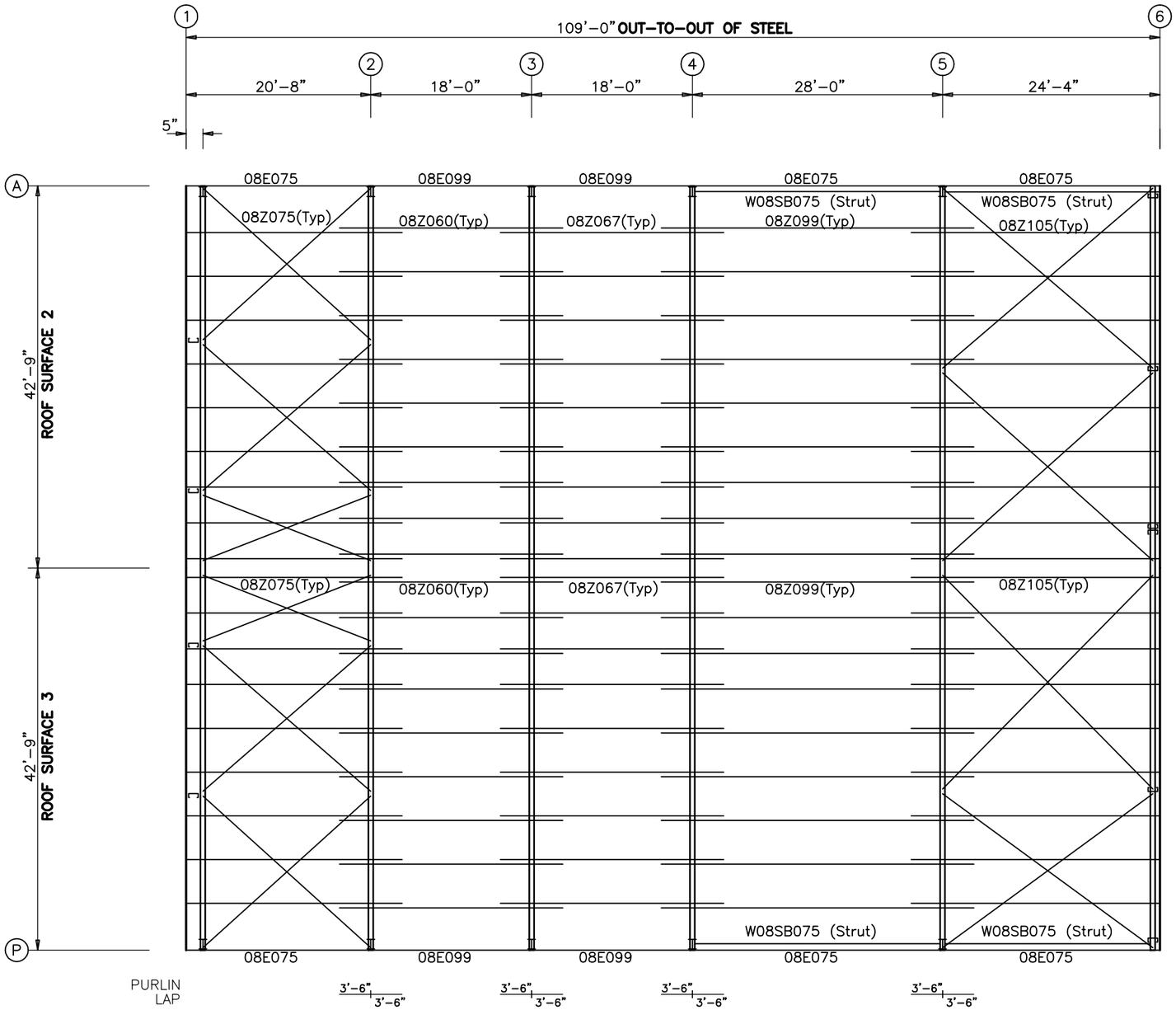

APPARATUS BAYS ROOF FRAMING PLAN
ALL ROD BRACING MATERIALS RD05– (U.N.O.)

ROOF FRAMING PLAN

GENERAL NOTES

1. PLACE TAGGED END OF RAFTERS TOWARDS THE LOW EAVE.
2. STD. ROD/CABLE SIZES PER PART PREFIX ARE:

ROD		CABLE	
RD05–	= 5/8" ROD	CA02–	= 1/4" CABLE
RD06–	= 3/4" ROD	CA03–	= 3/8" CABLE
RD07–	= 7/8" ROD	CA04–	= 1/2" CABLE
RD08–	= 1" ROD		
RD09–	= 1 1/8" ROD		
RD10–	= 1 1/4" ROD		

3. PURLIN AND EAVE STRUT CONNECTIONS UTILIZE BOTH A307 AND A325 BOLTS. REFER TO THE DETAILS FOR SPECIFIC USAGE REQUIREMENTS.
4. THIS DRAWING IS NOT TO SCALE.

ISSUE	DWN	CHK	ENG	PE	DATE
CONST. AB PLAN	NBS	EOP	CBM		7/24/2023
BUILDING DEPARTMENT REVIEW	WBS	DAN	CBM		7/31/2023

NUCOR BUILDING SYSTEMS
300 INDUSTRIAL PARKWAY, WATERLOO, IN 46793
PHONE: (260) 837-7891 FAX: (260) 837-7384
PO BOX 1006, 200 WHETSTONE RD, SWANSEA, SC 29160
PHONE: (803) 568-2100 FAX: (803) 568-2121
600 APACHE TRAIL, TERRELL, TX 75160
PHONE: (972) 524-4400 FAX: (972) 524-4417
1050 WATERY LANE, BRIGHAM CITY, UT 84302
PHONE: (435) 919-3100 FAX: (435) 919-3101

PROJECT NAME: WENDOVER FS #13 REPLACEMENT
WENDOVER, NV

CUSTOMER NAME: MICHAEL CLAY CORP
WINNEMUCCA, NV

JOB NUMBER: U23G0555A

SHEET TITLE

RUSSELL R. SKEEN
07/31/2023
Exp. Jun 30, 2024
CIVIL/STRUCTURAL

This sealed plans only to the materials designed herein by Nucor Building Systems, a division of Nucor Corporation. The drawings and the information shown thereon are the product of Nucor Building Systems and a register professional engineer employed by Nucor Building Systems and does not serve as a certification that the work out of record and shall not be construed as such.

SHEET

E1 of 12

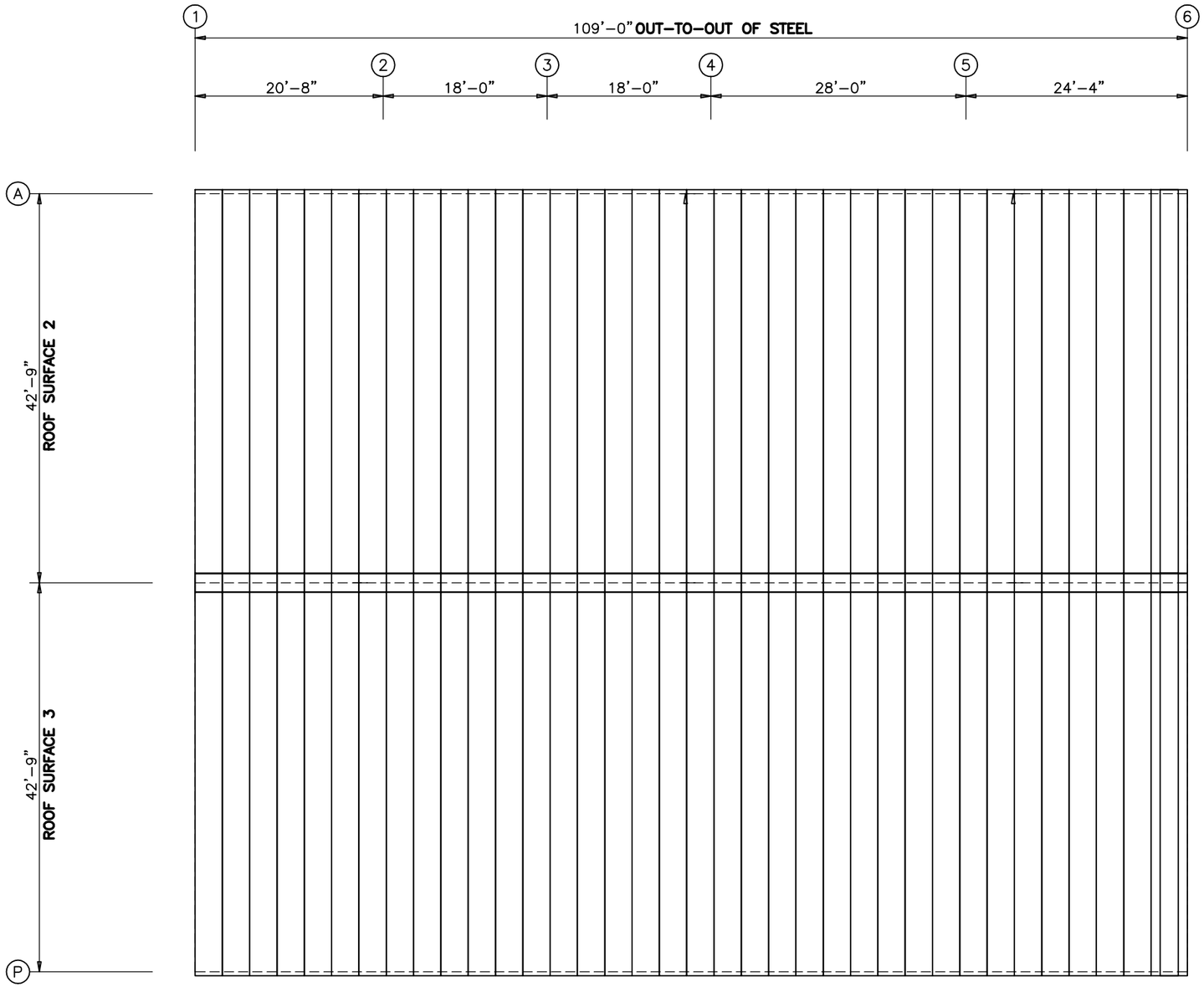

APPARATUS BAYS ROOF SHEETING PLAN

PANELS: 24Ga. 4" CFR42 – TERRA COTTA PVDF

ISSUE	DWN	CHK	ENG	PE	DATE
CONST. AB PLAN	NBS	EOP	CBM		7/24/2023
BUILDING DEPARTMENT REVIEW	WBS	DAN	CBM		7/31/2023

NUCOR BUILDING SYSTEMS
305 INDUSTRIAL PARKWAY, WATERLOO, IN 46793
PHONE: (260) 837-7891 FAX: (260) 837-7384
PO BOX 1006, 200 WHETSTONE RD, SWANSEA, SC 29160
PHONE: (803) 568-2100 FAX: (803) 568-2121
600 APACHE TRAIL, TERRELL, TX 75160
PHONE: (972) 524-4500 FAX: (972) 524-4417
1050 WATER LANE, BRIGHAM CITY, UT 84302
PHONE: (435) 919-3100 FAX: (435) 919-3101

PROJECT NAME
WENDOVER FS #13 REPLACEMENT
WENDOVER, NV

CUSTOMER NAME
MICHAEL CLAY CORP
WINNEMUCCA, NV

JOB NUMBER
U23G0555A

SHEET TITLE

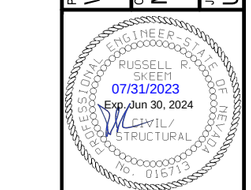

This sheet contains only to the materials described herein and is owned by Nucor Building Systems, a division of Nucor Corporation. The drawings and the information shown hereon are the product of Nucor Building Systems's engineer/ registered professional engineer whose seal appears on these drawings is employed by Nucor Buildings Systems and does not serve as a certification of any work performed or record and shall not be construed as such.

SHEET

E2 of 12

SPLICE PLATE & BOLT TABLE					
Mark	Qty	Type	Dia	Width	Thick
SP1	12	A325	0.750	8	0.625
SP2	8	A325	0.750	8	0.500
SP3	8	A325	0.625	8	0.375
SP4	8	A325	0.625	8	0.500
SP5	12	A325	0.750	8	0.625

MEMBER TABLE					
	Web Depth	Web Plate		Top/Left Flange	Bottom/Right Flange
MARK	Start/End	Thick	Length	W x Thk	W x Thk
COL01	11.50/40.00	0.220	199.87	8 x 0.38	8 x 0.38
COL02	11.50/40.00	0.220	199.87	8 x 0.38	8 x 0.38
RAF01	28.88/22.88	0.164	120.00	8 x 0.31	8 x 0.50
RAF02	22.88/22.88	0.135	174.00	8 x 0.31	8 x 0.31
	22.88/28.88	0.150	188.13	8 x 0.31	8 x 0.25
RAF03	28.88/22.88	0.150	188.13	8 x 0.31	8 x 0.25
	22.88/22.88	0.135	174.00	8 x 0.31	8 x 0.31
RAF04	22.88/28.88	0.164	120.00	8 x 0.31	8 x 0.50

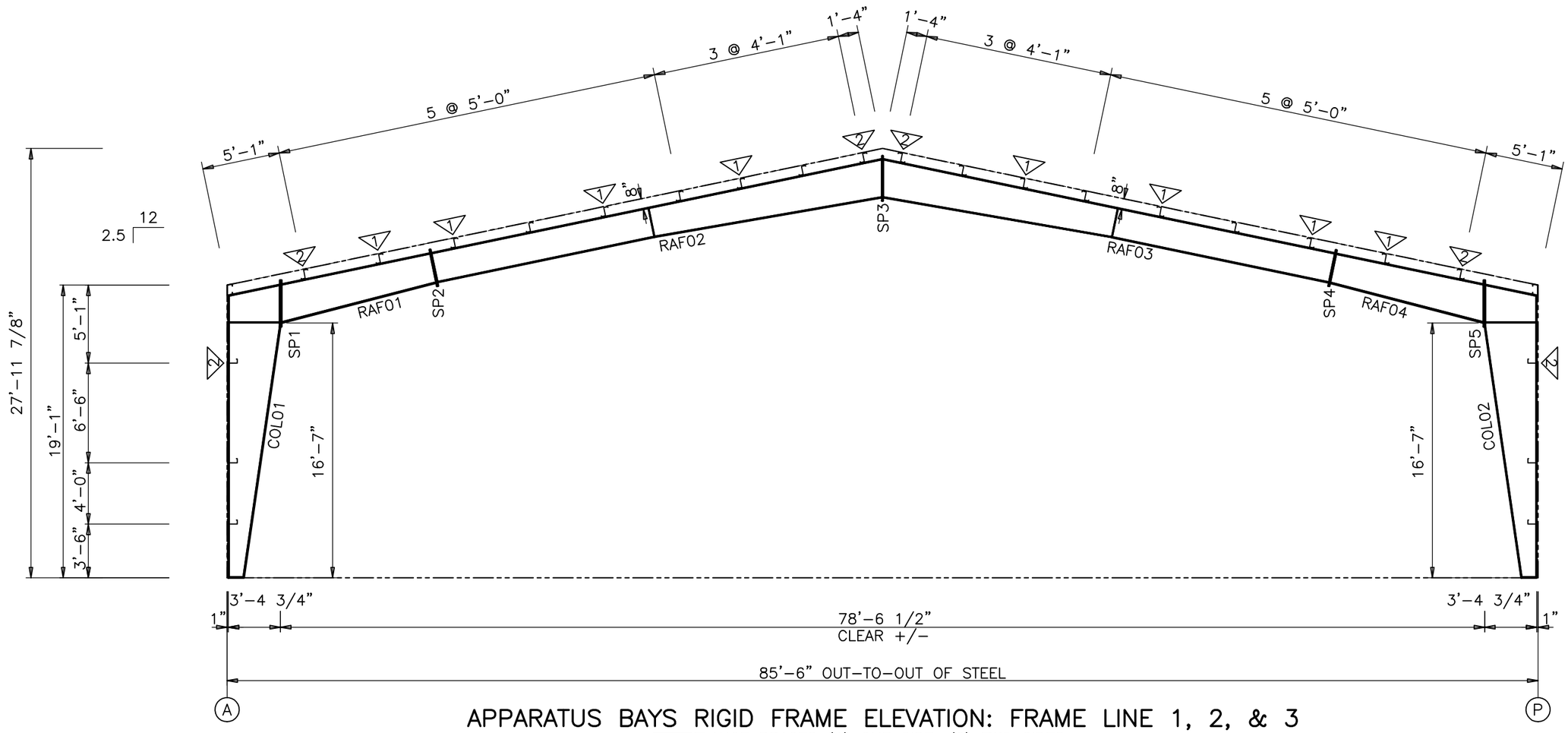

APPARATUS BAYS RIGID FRAME ELEVATION: FRAME LINE 1, 2, & 3

▽ FLANGE BRACES (1) ONE SIDE: (2) TWO SIDES

L2525105

ISSUE	DWN	CHK	ENG	PE	DATE
CONST. AB PLAN	NBS	EOP	CBM		7/24/2023
BUILDING DEPARTMENT REVIEW	WBS	DAN	CBM		7/31/2023

NUCOR BUILDING SYSTEMS
300 INDUSTRIAL PARKWAY, WATERLOO, IN 46793
PHONE: (260) 837-7891 FAX: (260) 837-7384
PO BOX 1006, 200 WHETSTONE RD, SWANSEA, SC 29160
PHONE: (803) 568-2100 FAX: (803) 568-2121
600 APACHE TRAIL, TERRELL, TX 75160
PHONE: (972) 551-6000 FAX: (972) 524-4417
1050 WATERY LANE, BRIGHAM CITY, UT 84302
PHONE: (435) 919-3100 FAX: (435) 919-3101

PROJECT NAME
WENDOVER FS #13 REPLACEMENT
WENDOVER, NV

CUSTOMER NAME
MICHAEL CLAY CORP
WINNEMUCCA, NV

JOB NUMBER
U23G0555A

SHEET TITLE

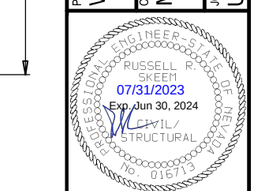

This sealed drawing is prepared only for the materials described herein by Nucor Building Systems, a division of Nucor Corporation. The drawings and the information shown thereon are the product of Nucor Building Systems engineering staff. Nucor Building Systems is employed by Nucor Buildings Systems and does not serve as a consultant to the owner. Any use of record and shall not be construed as such.

SHEET

E3 of 12

SPLICE PLATE & BOLT TABLE					
Mark	Qty	Type	Dia	Width	Thick
SP1	12	A325	0.875	8	0.750
SP2	12	A325	0.625	8	0.500
SP3	16	A325	0.750	8	0.750

MEMBER TABLE					
	Web Depth	Web Plate		Top/Left Flange	Bottom/Right Flange
MARK	Start/End	Thick	Length	W x Thk	W x Thk
COL01	11.25/31.00	0.188	198.00	8 x 0.38	8 x 0.63
COL02	11.25/31.00	0.188	198.00	8 x 0.63	8 x 0.38
RAF01	28.88/19.06	0.188	165.83	8 x 0.50	8 x 0.63
	19.06/28.88	0.150	204.00	8 x 0.38	8 x 0.38
	28.88/28.88	0.150	121.50	8 x 0.38	8 x 0.31
RAF02	28.88/28.88	0.150	121.50	8 x 0.38	8 x 0.31
	28.88/19.06	0.150	204.00	8 x 0.38	8 x 0.38
	19.06/28.88	0.188	165.83	8 x 0.50	8 x 0.63

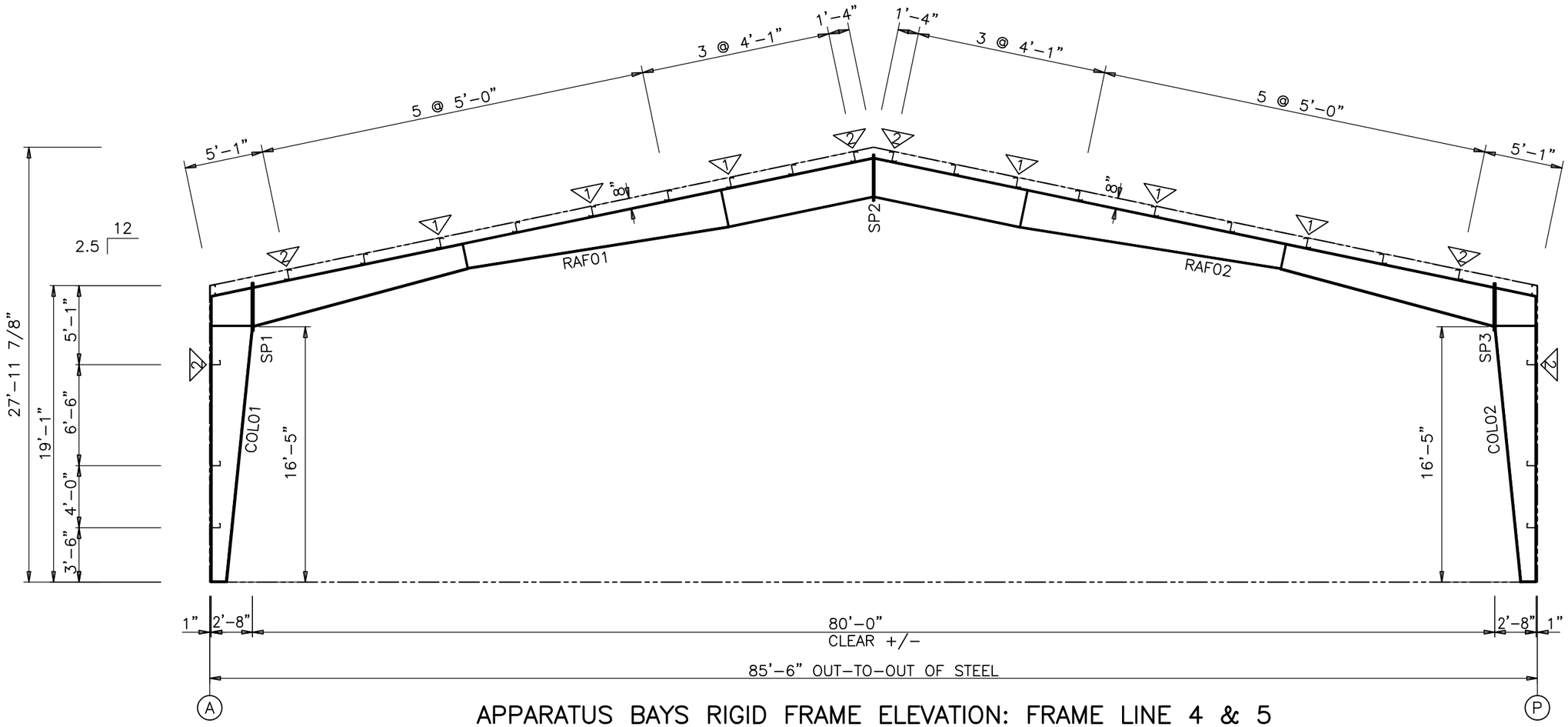

APPARATUS BAYS RIGID FRAME ELEVATION: FRAME LINE 4 & 5

▽ FLANGE BRACES (1) ONE SIDE: (2) TWO SIDES
L2525105

ISSUE	DWN	CHK	ENG	PE	DATE
CONST. AB PLAN	NBS	EOP	CBM		7/24/2023
BUILDING DEPARTMENT REVIEW	WBS	DAN	CBM		7/31/2023

NUCOR BUILDING SYSTEMS
300 INDUSTRIAL PARKWAY, WATERLOO, IN 46793
PHONE: (260) 837-7891 FAX: (260) 837-7384
PO BOX 1006, 200 WHETSTONE RD, SWANSEA, SC 29160
PHONE: (803) 568-2100 FAX: (803) 568-2121
600 APACHE TRAIL, TERRELL, TX 75160
PHONE: (972) 524-4500 FAX: (972) 524-4417
1050 WATERY LANE, BRIGHAM CITY, UT 84302
PHONE: (435) 919-3100 FAX: (435) 919-3101

PROJECT NAME
WENDOVER FS #13 REPLACEMENT
WENDOVER, NV

CUSTOMER NAME
MICHAEL CLAY CORP
WINNEMUCCA, NV

JOB NUMBER
U23G0555A

SHEET TITLE

RUSSELL R. SKEEN
07/31/2023
Exp. Jun 30, 2024
CIVIL/STRUCTURAL

This set of plans only to the materials described herein. Nucor Building Systems, a division of Nucor Corporation. The drawings and the information shown thereon are not to be used for any project of Nucor Building Systems or a registered professional engineer employed by Nucor. Nucor Buildings Systems and does not serve as a record and shall not be construed as such.

SHEET

E4 of 12

SPLICE PLATE & BOLT TABLE					
Mark	Qty	Type	Dia	Width	Thick
SP1	4	A325	0.500	8	0.375
SP2	4	A325	0.500	8	0.375
SP3	4	A325	0.500	6	0.375
SP4	4	A325	0.500	8	0.375
SP5	4	A325	0.500	6	0.375
SP6	8	A325	0.500	6	0.375
SP7	4	A325	0.500	8	0.375
SP8	8	A325	0.750	6	0.500
SP9	4	A325	0.500	8	0.375

MEMBER TABLE			
	Web Depth	Web Plate	
MARK	Start/End	Thick	Length
COL01		W8x10	214.56
COL02		W8x18	264.36
COL03		W8x18	308.64
COL04		W8x18	257.04
COL05		W8x10	213.12
RAF01	8.00/8.00	W8x18	260.48
	8.00/8.00	W8x18	60.69
RAF02	8.00/8.00	W8x18	156.88
	8.00/8.00	W8x18	53.12
RAF03	8.00/8.00	W8x18	211.44
RAF04	8.00/8.00	W8x18	95.00
RAF05	8.00/8.00	W8x18	224.72

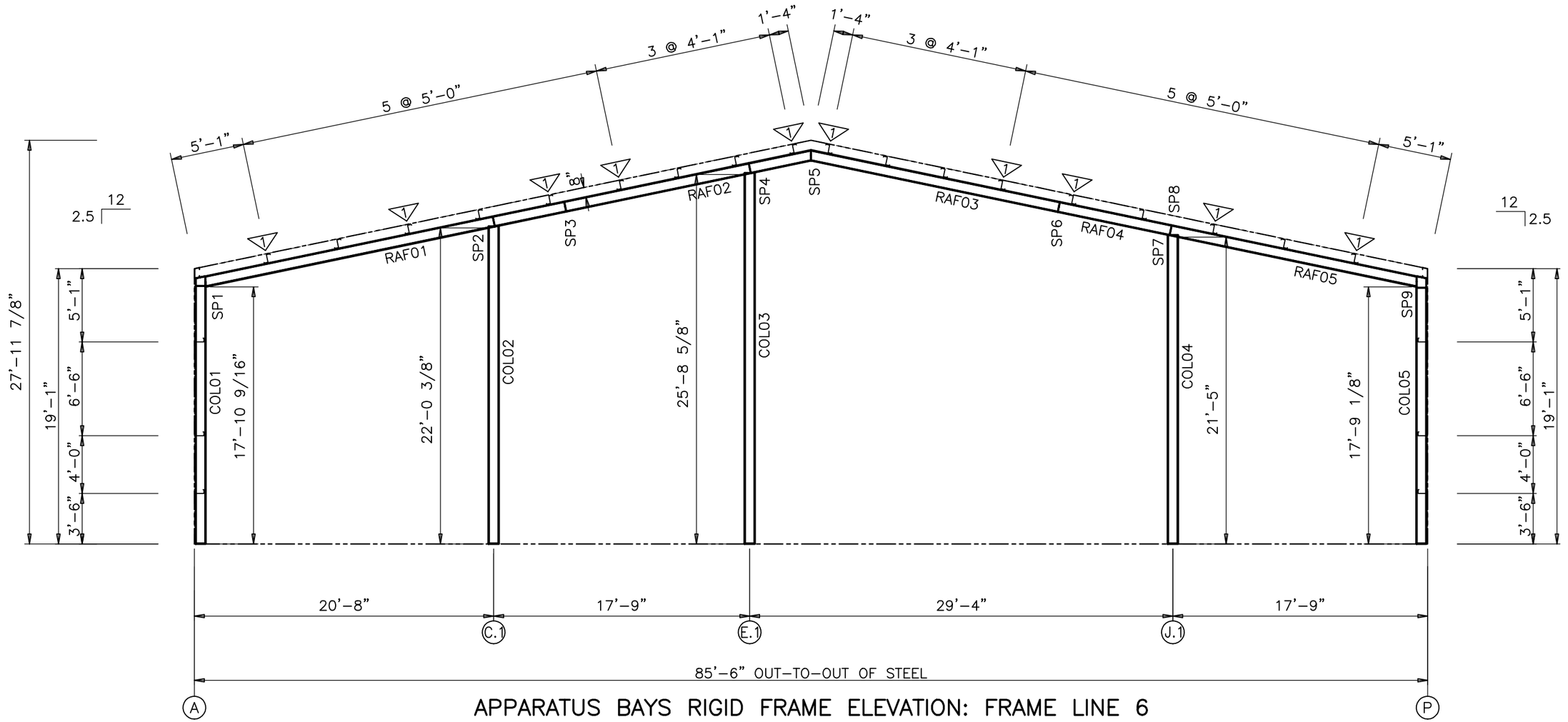

APPARATUS BAYS RIGID FRAME ELEVATION: FRAME LINE 6

▽ FLANGE BRACES (1) ONE SIDE: (2) TWO SIDES
L2525105

ISSUE	DWN	CHK	ENG	PE	DATE
CONST. AB PLAN	NBS	EOP	CBM		7/24/2023
BUILDING DEPARTMENT REVIEW	WBS	DAN	CBM		7/31/2023

NUCOR BUILDING SYSTEMS
300 INDUSTRIAL PARKWAY, WATERLOO, IN 46793
PHONE: (260) 837-7891 FAX: (260) 837-7384
PO BOX 1006, 200 WHETSTONE RD, SWANSEA, SC 29160
PHONE: (803) 568-2100 FAX: (803) 568-2121
600 APACHE TRAIL, TERRELL, TX 75160
PHONE: (972) 524-4400 FAX: (972) 524-4417
1050 WATERY LANE, BRIGHAM CITY, UT 84302
PHONE: (435) 919-3100 FAX: (435) 919-3101

PROJECT NAME
WENDOVER FS #13 REPLACEMENT
WENDOVER, NV

CUSTOMER NAME
MICHAEL CLAY CORP
WINNEMUCCA, NV

JOB NUMBER
U23G0555A

SHEET TITLE

RUSSELL R. SKEEN
07/31/2023
Exp. Jun 30, 2024
CIVIL/STRUCTURAL

This seal affirms only to the materials shown hereon, provided by Nucor Building Systems, a division of Nucor Corporation. The drawings and the information shown hereon are instruments of service of Nucor Building Systems and are the property of Nucor Building Systems. The registered professional engineer whose seal appears on these drawings is employed by Nucor Buildings Systems and does not serve as a consultant. Any reuse without written verification or adaptation by Nucor Buildings Systems for the specific purpose intended will be at user's sole risk and without liability to Nucor Buildings Systems. Unauthorized use of these drawings is prohibited and shall not be considered as such.

SHEET
E5 of 12

SPLICE PLATE & BOLT TABLE					
Mark	Qty	Type	Dia	Width	Thick
SP1	12	A325	0.75	8	0.625
SP2	12	A325	0.75	8	0.625

MEMBER TABLE					
	Web Depth	Web Plate		Top/Left Flange	Bottom/Right Flange
MARK	Start/End	Thick	Length	W x Thk	W x Thk
COL01	21.00/21.00	0.164	199.00	8 x 0.50	8 x 0.50
COL02	21.00/21.00	0.164	199.00	8 x 0.50	8 x 0.50
RAF01	19.00/19.00	0.164	201.00	8 x 0.50	8 x 0.50

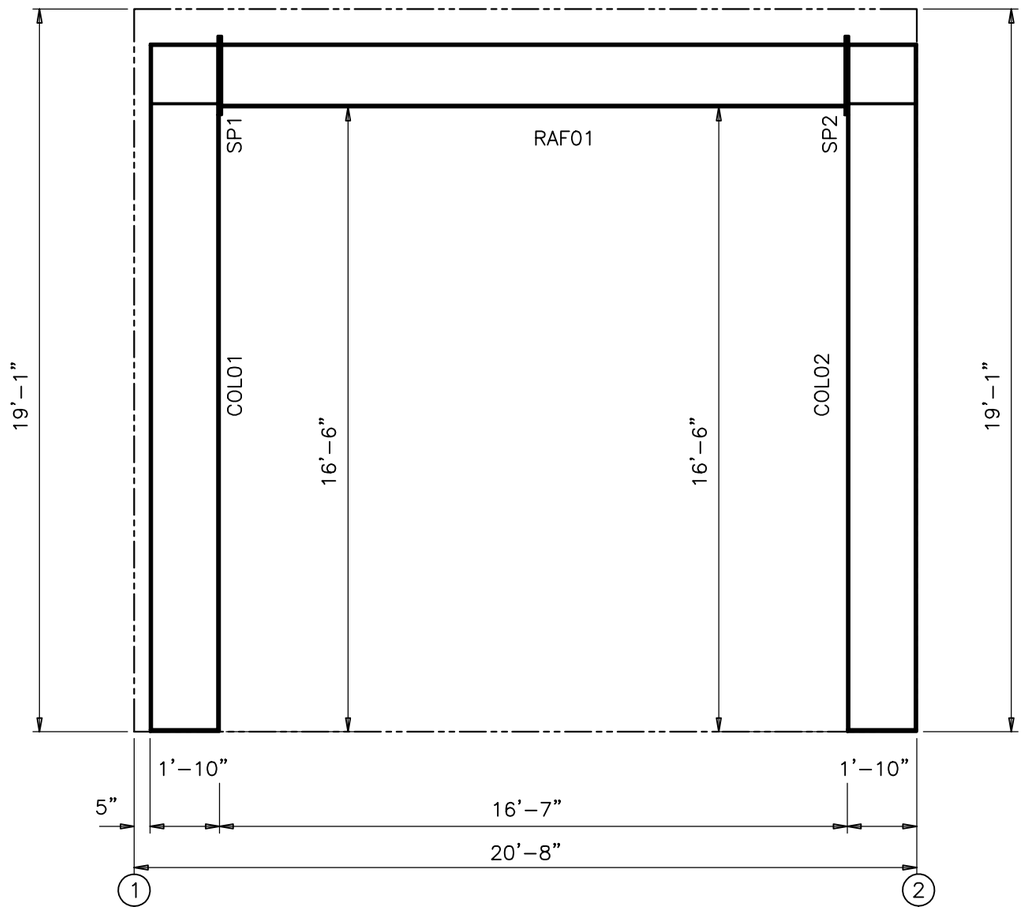

APPARATUS BAYS PORTAL FRAME ELEVATION: FRAME LINE A & P, BAY 1–2

ISSUE	DWN	CHK	ENG	PE	DATE
CONST. AB PLAN	NBS	EOP	CBM		7/24/2023
BUILDING DEPARTMENT REVIEW	WBS	DAN	CBM		7/31/2023

NUCOR BUILDING SYSTEMS
300 INDUSTRIAL PARKWAY, WATERLOO, IN 46793
PHONE: (260) 837-7891 FAX: (260) 837-7384
PO BOX 1006, 200 WHETSTONE RD, SWANSEA, SC 29160
PHONE: (803) 568-2100 FAX: (803) 568-2121
600 APACHE TRAIL, TERRELL, TX 75160
PHONE: (972) 524-4500 FAX: (972) 524-4417
1050 WATERY LANE, BRIGHAM CITY, UT 84302
PHONE: (435) 919-3100 FAX: (435) 919-3101

PROJECT NAME
WENDOVER FS #13 REPLACEMENT
WENDOVER, NV

CUSTOMER NAME
MICHAEL CLAY CORP
WINNEMUCCA, NV

JOB NUMBER
U23G0555A

SHEET TITLE

RUSSELL R. SKEEM
PROFESSIONAL ENGINEER - STATE OF NEVADA
07/31/2023
Exp. Jun 30, 2024
CIVIL/STRUCTURAL
NO. 016713

This set of plans and/or specifications is the property of Nucor Building Systems, a division of Nucor Corporation. The drawings and the information shown thereon are not to be reproduced or used in any form or manner whatsoever without the written permission of Nucor Building Systems. Only those drawings which are signed and sealed by a registered professional engineer employed by Nucor Buildings Systems and does not serve as a record drawing shall be considered a record and shall not be construed as such.

SHEET
E6 of 12

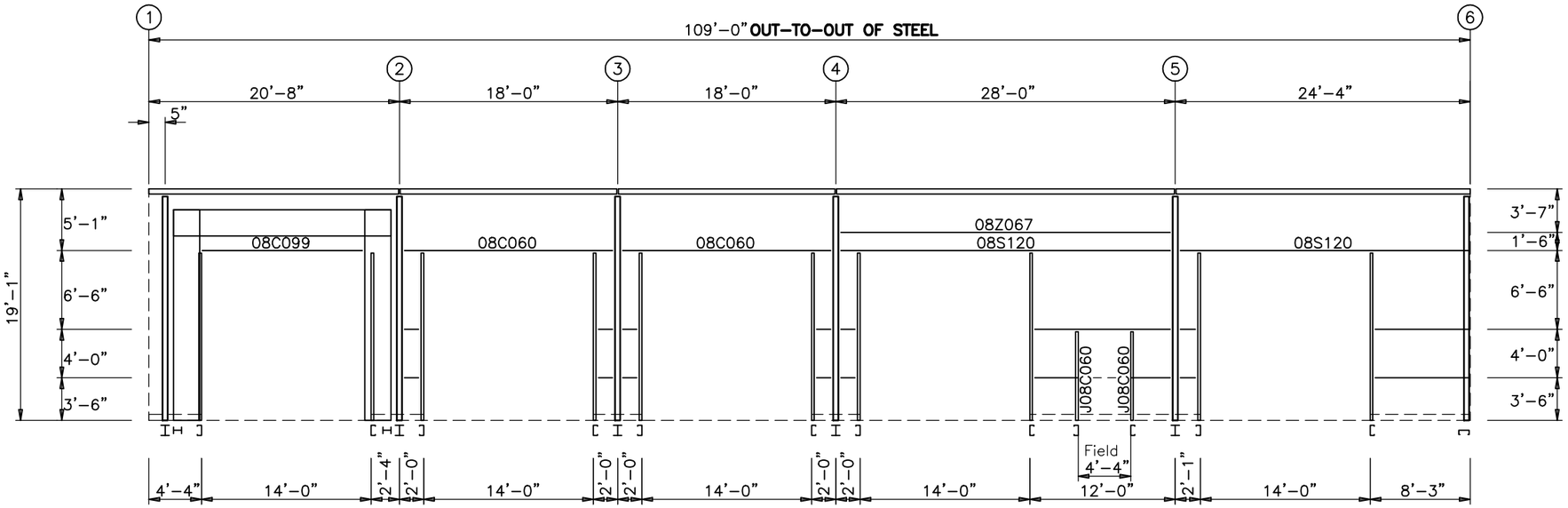

APPARATUS BAYS SIDEWALL FRAMING: FRAME LINE P
ALL GIRTS 08Z060 (U.N.O.)
ALL F.O. MATERIALS 08C075 (U.N.O.)

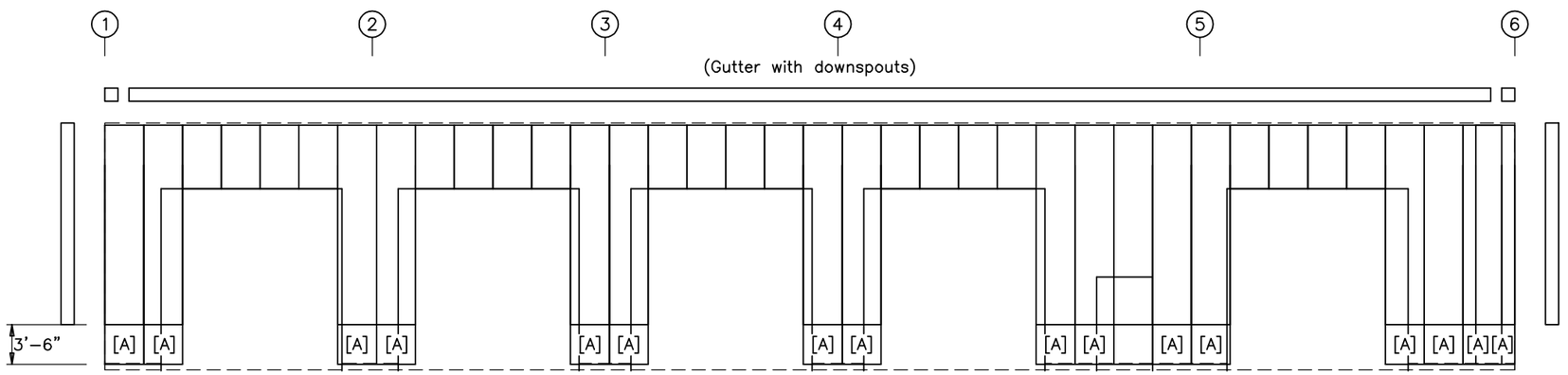

APPARATUS BAYS SIDEWALL SHEETING & TRIM: FRAME LINE P

PANELS: 24Ga. 2.5" Santa Fe – Desert Sand PVDF

[A] PANELS: 24Ga. 2.5" Santa Fe – Surrey Beige PVDF

6" TALL WALL BY OTHERS FROM F.F. WHOLE WALL

SIDEWALL FRAMING PLAN

GENERAL NOTES

1. STD. ROD/CABLE SIZES PER PART PREFIX ARE:

ROD		CABLE	
RD05–	= 5/8" ROD	CA02–	= 1/4" CABLE
RD06–	= 3/4" ROD	CA03–	= 3/8" CABLE
RD07–	= 7/8" ROD	CA04–	= 1/2" CABLE
RD08–	= 1" ROD		
RD09–	= 1 1/8" ROD		
RD10–	= 1 1/4" ROD		

2. ROD/CABLE BRACING THAT OCCURS IN FLUSH OR INSET GIRT CONDITIONS WILL REQUIRE FIELD SLOTTING OF GIRT WEBS TO ALLOW FOR BRACING.
3. FRAMED OPENINGS WHICH ARE FIELD LOCATED WILL REQUIRE FIELD CUTTING OF GIRTS AND SHEETING.
4. THIS DRAWING IS NOT TO SCALE.

ISSUE	DWN	CHK	ENG	PE	DATE
CONST. AB PLAN	NBS	EOP	CBM		7/24/2023
BUILDING DEPARTMENT REVIEW	WBS	DAN	CBM		7/31/2023

NUCOR BUILDING SYSTEMS
300 INDUSTRIAL PARKWAY, WATERLOO, IN 46793
PHONE: (260) 837-7891 FAX: (260) 837-7384
PO BOX 1006, 200 WHETSTONE RD, SWANSEA, SC 29160
PHONE: (803) 568-2100 FAX: (803) 568-2121
600 APACHE TRAIL, TERRELL, TX 75160
PHONE: (972) 524-4500 FAX: (972) 524-4417
1050 WATERY LANE, BRIGHAM CITY, UT 84302
PHONE: (435) 919-3100 FAX: (435) 919-3101

PROJECT NAME: WENDOVER FS #13 REPLACEMENT
WENDOVER, NV

CUSTOMER NAME: MICHAEL CLAY CORP
WINNEMUCCA, NV

JOB NUMBER: U23G0555A

SHEET TITLE

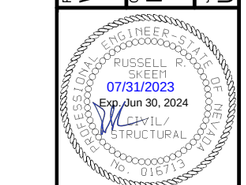

This set of plans and/or specifications is submitted only to the materials as described herein by Nucor Building Systems, a division of Nucor Corporation. The Drawings and the Specifications, which accompany this transmittal are the product of Nucor Building Systems and are copyrighted. Nucor Building Systems has not registered professional engineers in the states where these drawings is employed by Nucor Buildings Systems and does not serve as a substitute for project engineering of record and shall not be construed as such.

SHEET
E7 of 12

SIDEWALL FRAMING PLAN

GENERAL NOTES

1. STD. ROD/CABLE SIZES PER PART PREFIX ARE:

ROD		CABLE	
RD05–	= 5/8" ROD	CA02–	= 1/4" CABLE
RD06–	= 3/4" ROD	CA03–	= 3/8" CABLE
RD07–	= 7/8" ROD	CA04–	= 1/2" CABLE
RD08–	= 1" ROD		
RD09–	= 1 1/8" ROD		
RD10–	= 1 1/4" ROD		

2. ROD/CABLE BRACING THAT OCCURS IN FLUSH OR INSET GIRT CONDITIONS WILL REQUIRE FIELD SLOTTING OF GIRT WEBS TO ALLOW FOR BRACING.
3. FRAMED OPENINGS WHICH ARE FIELD LOCATED WILL REQUIRE FIELD CUTTING OF GIRTS AND SHEETING.
4. THIS DRAWING IS NOT TO SCALE.

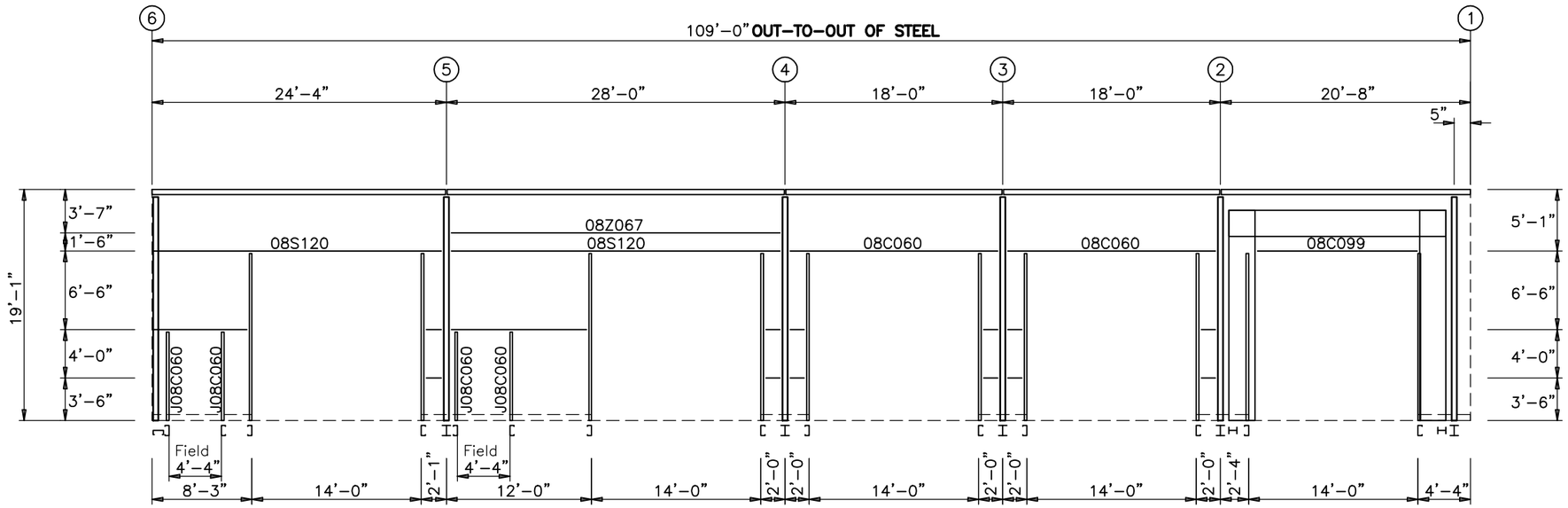

APPARATUS BAYS SIDEWALL FRAMING: FRAME LINE A
ALL GIRTS 08Z060 (U.N.O.)
ALL F.O. MATERIALS 08C075 (U.N.O.)

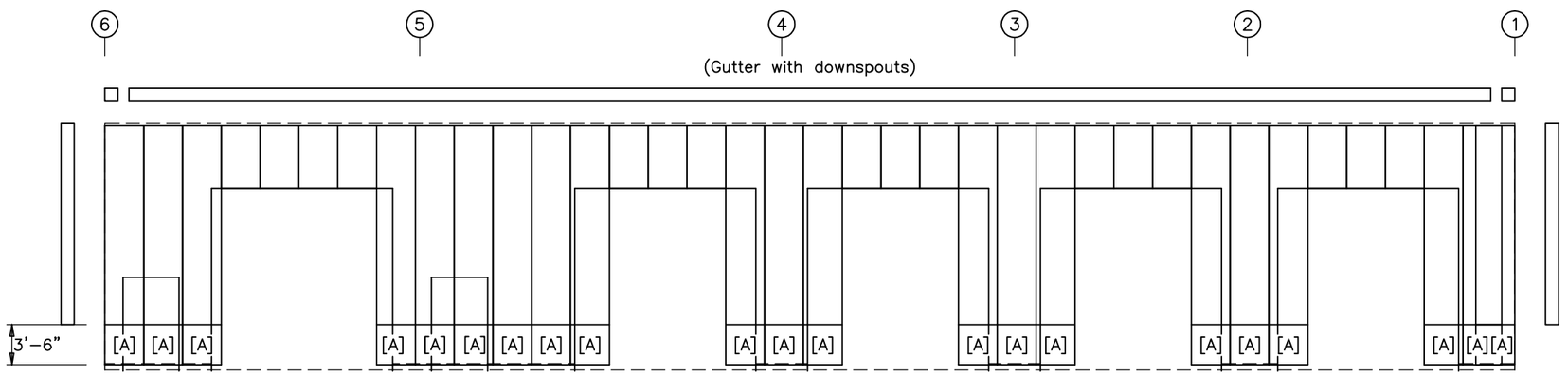

APPARATUS BAYS SIDEWALL SHEETING & TRIM: FRAME LINE A

PANELS: 24Ga. 2.5" Santa Fe – Desert Sand PVDF

[A] PANELS: 24Ga. 2.5" Santa Fe – Surrey Beige PVDF

6" TALL WALL BY OTHERS FROM F.F. WHOLE WALL

ISSUE	DWN	CHK	ENG	PE	DATE
CONST. AB PLAN	NBS	EOP	CBM		7/24/2023
BUILDING DEPARTMENT REVIEW	WBS	DAN	CBM		7/31/2023

NUCOR BUILDING SYSTEMS
300 INDUSTRIAL PARKWAY, WATERLOO, IN 46793
PHONE: (260) 837–7891 FAX: (260) 837–7384
PO BOX 1006, 200 WHETSTONE RD, SWANSEA, SC 29160
PHONE: (803) 568–2100 FAX: (803) 568–2121
600 APACHE TRAIL, TERRELL, TX 75160
PHONE: (972) 524–4400 FAX: (972) 524–4417
1050 WATERY LANE, BRIGHAM CITY, UT 84302
PHONE: (435) 919–3100 FAX: (435) 919–3101

PROJECT NAME: WENDOVER FS #13 REPLACEMENT
WENDOVER, NV

CUSTOMER NAME: MICHAEL CLAY CORP
WINNEMUCCA, NV

JOB NUMBER: U23G0555A

SHEET TITLE

RUSSELL R. SKEEN
07/31/2023
Exp. Jun 30, 2024
CIVIL/STRUCTURAL

This sealed plans only to the materials as described herein by Nucor Building Systems, a division of Nucor Corporation. The drawings and the information shown thereon are the product of Nucor Building Systems and are to be used only with its authorized purchaser or user in the building designated for Nucor Building Systems and shall not be used on any other building. Nucor Building Systems is employed by Nucor Buildings Systems and does not serve as the architect of record for any of these drawings and shall not be construed as such.

SHEET

E8 of 12

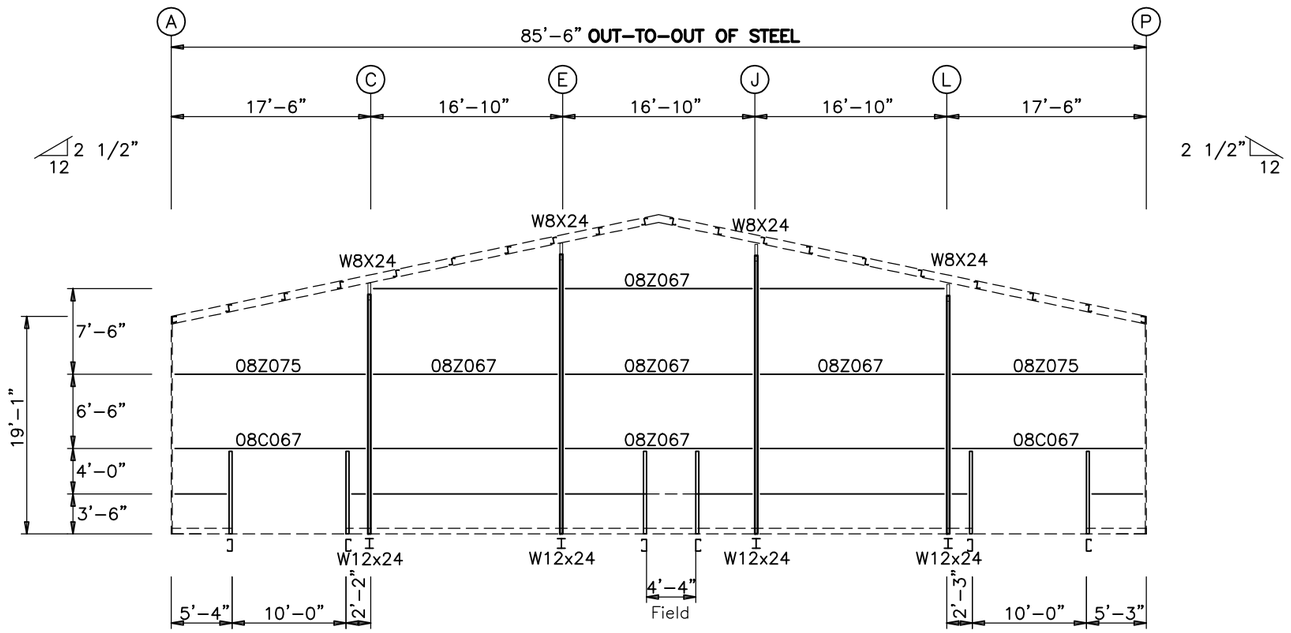

APPARATUS BAYS ENDWALL FRAMING: FRAME LINE 1

ALL GIRTS 08Z060 (U.N.O.)
ALL F.O. MATERIALS 08C060 (U.N.O.)

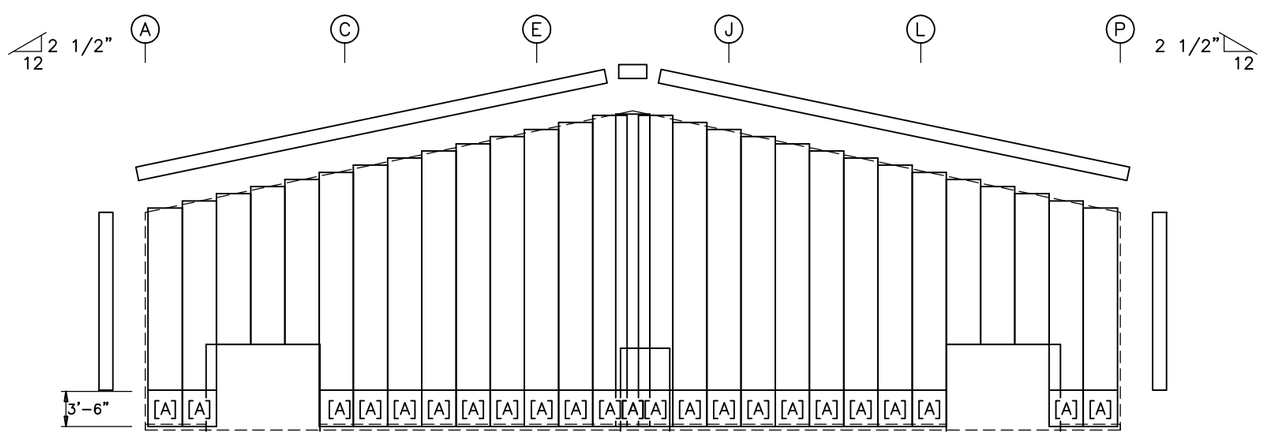

APPARATUS BAYS ENDWALL SHEETING & TRIM: FRAME LINE 1

PANELS: 24Ga. 2.5" Santa Fe – Desert Sand PVDF
[A] PANELS: 24Ga. 2.5" Santa Fe – Surrey Beige PVDF
6" TALL WALL BY OTHERS FROM F.F. WHOLE WALL

ENDWALL FRAMING PLAN

GENERAL NOTES

1. STD. ROD/CABLE SIZES PER PART PREFIX ARE:

ROD		CABLE	
RD05–	= 5/8" ROD	CA02–	= 1/4" CABLE
RD06–	= 3/4" ROD	CA03–	= 3/8" CABLE
RD07–	= 7/8" ROD	CA04–	= 1/2" CABLE
RD08–	= 1" ROD		
RD09–	= 1 1/8" ROD		
RD10–	= 1 1/4" ROD		

2. ROD/CABLE BRACING THAT OCCURS IN FLUSH OR INSET GIRT CONDITIONS WILL REQUIRE FIELD SLOTTING OF GIRT WEBS TO ALLOW FOR BRACING.
3. FRAMED OPENINGS WHICH ARE FIELD LOCATED WILL REQUIRE FIELD CUTTING OF GIRTS AND SHEETING.
4. THIS DRAWING IS NOT TO SCALE.

ISSUE	DWN	CHK	ENG	PE	DATE
CONST. AB PLAN	NBS	EOP	CBM		7/24/2023
BUILDING DEPARTMENT REVIEW	WBS	DAN	CBM		7/31/2023

NUCOR BUILDING SYSTEMS
300 INDUSTRIAL PARKWAY, WATERLOO, IN 46793
PHONE: (260) 837-7891 FAX: (260) 837-7384
PO BOX 1006, 200 WHETSTONE RD, SWANSEA, SC 29160
PHONE: (803) 568-2100 FAX: (803) 568-2121
600 APACHE TRAIL, TERRELL, TX 75160
PHONE: (972) 524-4000 FAX: (972) 524-4417
1050 WATERY LANE, BRIGHAM CITY, UT 84302
PHONE: (435) 919-3100 FAX: (435) 919-3101

PROJECT NAME
WENDOVER FS #13 REPLACEMENT
WENDOVER, NV

CUSTOMER NAME
MICHAEL CLAY CORP
WINNEMUCCA, NV

JOB NUMBER
U23G0555A

SHEET TITLE

RUSSELL R. SKEEN
07/31/2023
Exp. Jun 30, 2024
CIVIL/STRUCTURAL

This sheet contains only the materials designed, detailed, and manufactured by Nucor Building Systems, a division of Nucor Corporation. The drawings and the information shown hereon are the product of Nucor Building Systems's in-house professional engineering staff. Review and approval of these drawings is employed by Nucor Buildings Systems and does not serve as a substitute for those required of record and shall not be construed as such.

SHEET
E9 of 12

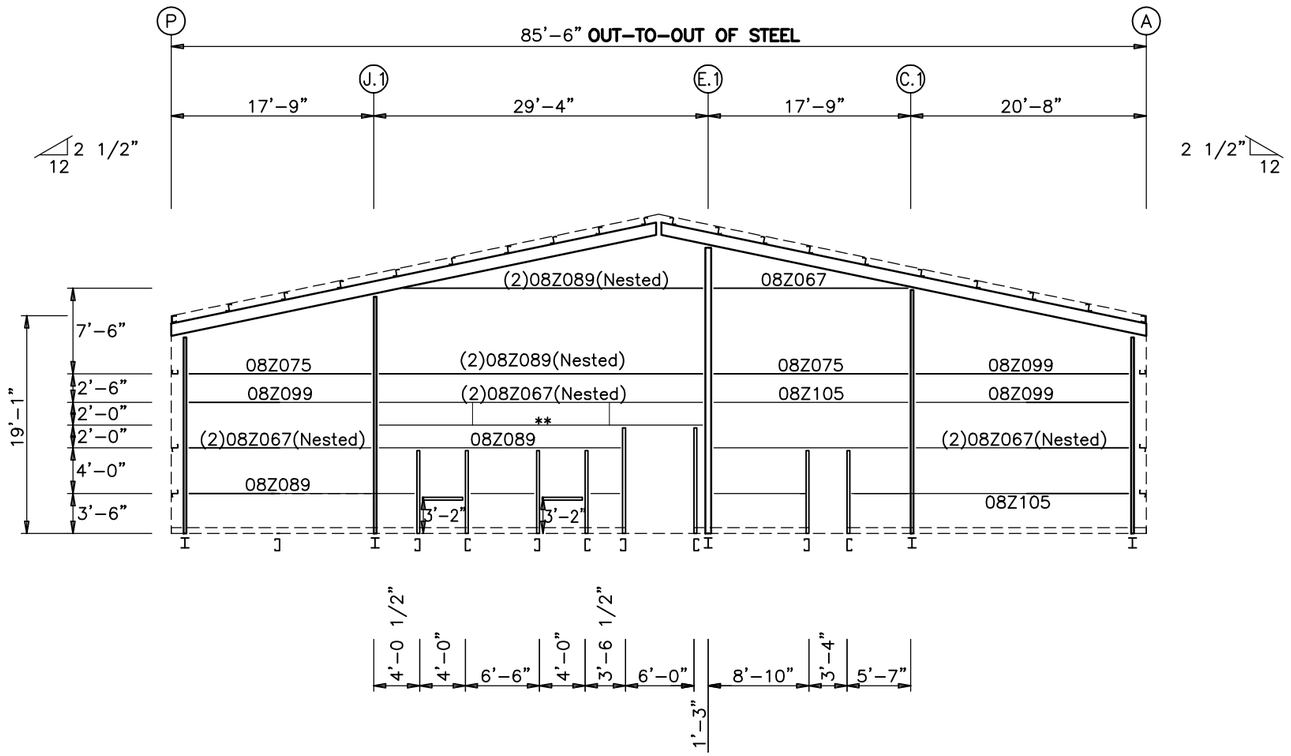

APPARATUS BAYS ENDWALL FRAMING: FRAME LINE 6

(2) ROWS GIRT BRACING REQUIRED IN BAY 2 @ 9'-6" TO 11'-6" , SEE PAGE D4 FOR INFORMATION
ALL GIRTS 08Z060 (U.N.O.)
ALL F.O. MATERIALS 08C060 (U.N.O.)
**** INDICATES (2)08Z105(NESTED)**

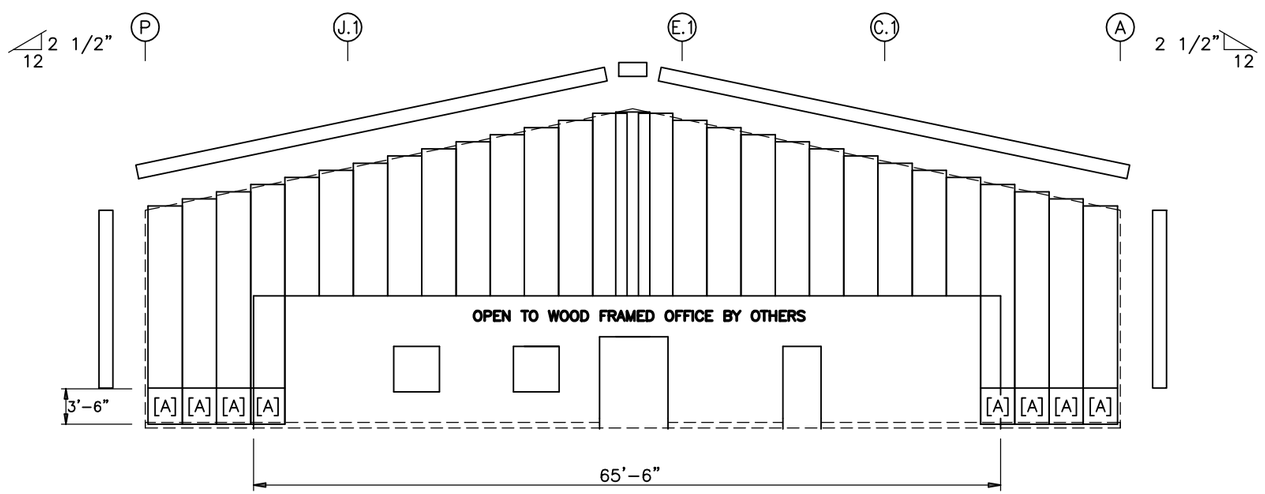

APPARATUS BAYS ENDWALL SHEETING & TRIM: FRAME LINE 6

PANELS: 24Ga. 2.5" Santa Fe – Desert Sand PVDF
[A] PANELS: 24Ga. 2.5" Santa Fe – Surrey Beige PVDF
6" TALL WALL BY OTHERS FROM F.F. WHOLE WALL

ENDWALL FRAMING PLAN

GENERAL NOTES

1. STD. ROD/CABLE SIZES PER PART PREFIX ARE:

ROD		CABLE	
RD05–	= 5/8" ROD	CA02–	= 1/4" CABLE
RD06–	= 3/4" ROD	CA03–	= 3/8" CABLE
RD07–	= 7/8" ROD	CA04–	= 1/2" CABLE
RD08–	= 1" ROD		
RD09–	= 1 1/8" ROD		
RD10–	= 1 1/4" ROD		

2. ROD/CABLE BRACING THAT OCCURS IN FLUSH OR INSET GIRT CONDITIONS WILL REQUIRE FIELD SLOTTING OF GIRT WEBS TO ALLOW FOR BRACING.
3. FRAMED OPENINGS WHICH ARE FIELD LOCATED WILL REQUIRE FIELD CUTTING OF GIRTS AND SHEETING.
4. THIS DRAWING IS NOT TO SCALE.

ISSUE	DWN	CHK	ENG	PE	DATE
CONST. AB PLAN	NBS	EOP	CBM		7/24/2023
BUILDING DEPARTMENT REVIEW	WBS	DAN	CBM		7/31/2023

NUCOR BUILDING SYSTEMS
300 INDUSTRIAL PARKWAY, WATERLOO, IN 46793
PHONE: (260) 837-7891 FAX: (260) 837-7384
PO BOX 1006, 200 WHETSTONE RD, SWANSEA, SC 29160
PHONE: (803) 568-2100 FAX: (803) 568-2121
600 APACHE TRAIL, TERRELL, TX 75160
PHONE: (972) 524-4500 FAX: (972) 524-4417
1050 WATERY LANE, BRIGHAM CITY, UT 84302
PHONE: (435) 919-3100 FAX: (435) 919-3101

PROJECT NAME: WENDOVER FS #13 REPLACEMENT
WENDOVER, NV

CUSTOMER NAME: MICHAEL CLAY CORP
WINNEMUCCA, NV

JOB NUMBER: U23G0555A

SHEET TITLE

RUSSELL R. SKEEN
07/31/2023
Exp. Jun 30, 2024
CIVIL/STRUCTURAL

This set of plans only to the materials described herein by Nucor Building Systems, a division of Nucor Corporation. The drawings and the information shown thereon are the product of Nucor Building Systems's regular professional engineering staff and consultants and those drawings is employed by Nucor Buildings Systems and does not serve as a representation that the drawings of record and shall not be construed as such.

SHEET

E10 of 12

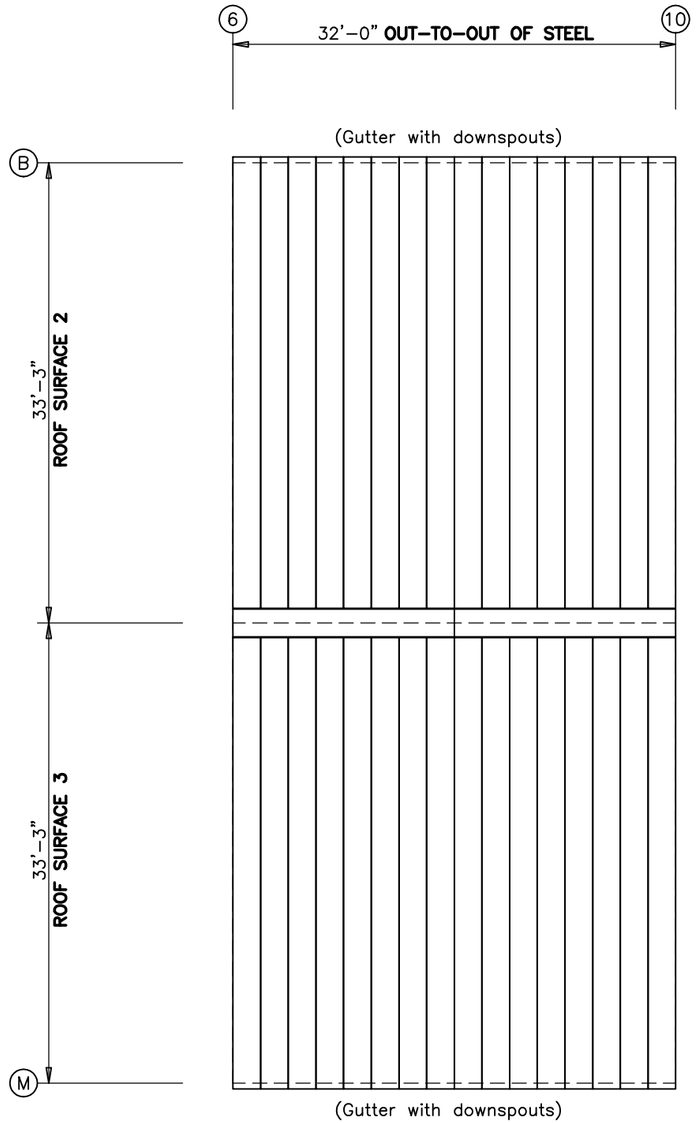

WOOD FRAMED OFFICE BY OTHERS ROOF SHEETING PLAN

PANELS: 24 Ga. LS360 – Terra Cotta PVDF

ISSUE	DWN	CHK	ENG	PE	DATE
CONST. AB PLAN	NBS	EOP	CBM		7/24/2023
BUILDING DEPARTMENT REVIEW	WBS	DAN	CBM		7/31/2023

NUCOR BUILDING SYSTEMS
305 INDUSTRIAL PARKWAY, WATERLOO, IN 46793
PHONE: (260) 837-7891 FAX: (260) 837-7384
PO BOX 1006, 200 WHETSTONE RD, SWANSEA, SC 29160
PHONE: (803) 568-2100 FAX: (803) 568-2121
600 APACHE TRAIL, TERRELL, TX 75160
PHONE: (972) 524-4500 FAX: (972) 524-4417
1050 WATER LANE, BRIGHAM CITY, UT 84302
PHONE: (435) 919-3100 FAX: (435) 919-3101

PROJECT NAME
WENDOVER FS #13 REPLACEMENT
WENDOVER, NV

CUSTOMER NAME
MICHAEL CLAY CORP
WINNEMUCCA, NV

JOB NUMBER
U23G0555A

SHEET TITLE

RUSSELL R. SKEEM
07/31/2023
Exp. Jun 30, 2024
CIVIL/STRUCTURAL
No. 016713

This set of plans and/or specifications is the property of Nucor Building Systems, a division of Nucor Corporation. The drawings and the information shown thereon are the product of Nucor Building Systems' engineering department. Any use of these drawings is employed by Nucor Buildings Systems and does not serve as a representation that the drawings are record and shall not be construed as such.

SHEET
E11 of 12

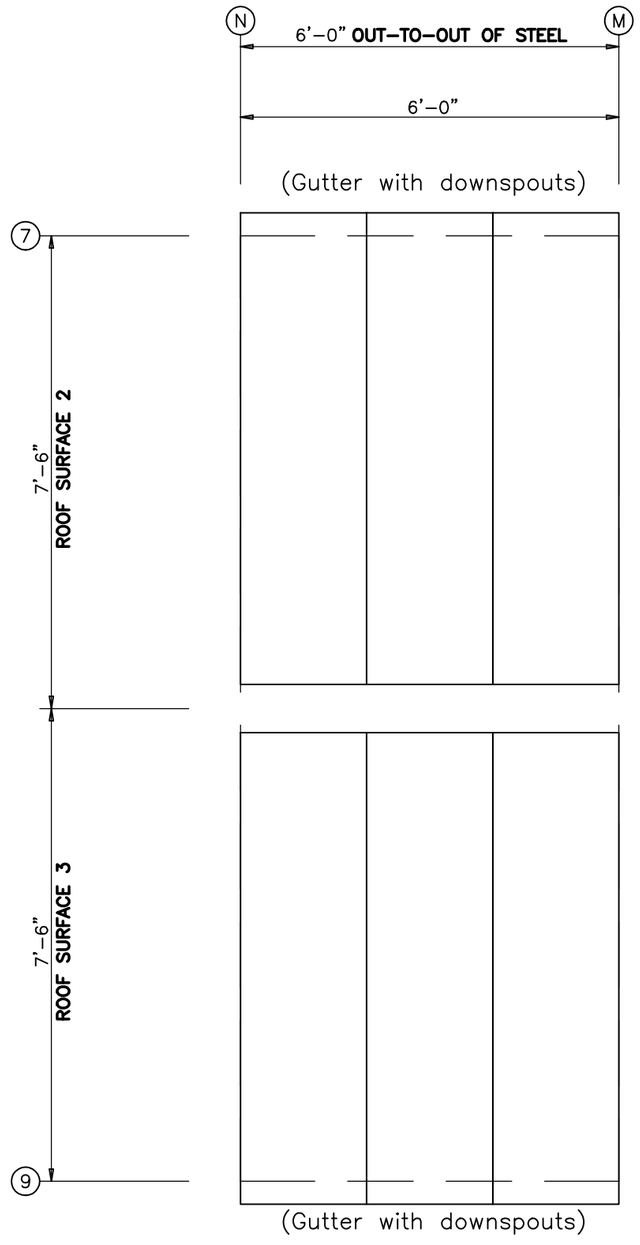

ENTRY BY OTHERS ROOF SHEETING PLAN

PANELS: 24 Ga. LS360 – Terra Cotta PVDF

ISSUE	DWN	CHK	ENG	PE	DATE
CONST. AB PLAN	NBS	EOP	CBM		7/24/2023
BUILDING DEPARTMENT REVIEW	WBS	DAN	CBM		7/31/2023

NUCOR BUILDING SYSTEMS
300 INDUSTRIAL PARKWAY, WATERLOO, IN 46793
PHONE: (260) 837-7891 FAX: (260) 837-7384
PO BOX 1006, 200 WHETSTONE RD, SWANSEA, SC 29160
PHONE: (803) 568-2100 FAX: (803) 568-2121
600 APACHE TRAIL, TERRELL, TX 75160
PHONE: (972) 524-4500 FAX: (972) 524-4417
1050 WATER LANE, BRIGHAM CITY, UT 84302
PHONE: (435) 919-3100 FAX: (435) 919-3101

PROJECT NAME
WENDOVER FS #13 REPLACEMENT
WENDOVER, NV

CUSTOMER NAME
MICHAEL CLAY CORP
WINNEMUCCA, NV

JOB NUMBER
U23G0555A

SHEET TITLE

RUSSELL R. SKEEM
07/31/2023
Exp. Jun 30, 2024
CIVIL/STRUCTURAL

This set of plans, prepared by the materials designated and supplied by Nucor Building Systems, a division of Nucor Corporation. The drawings and the information shown thereon are the exclusive property of Nucor Building Systems and are to be used only by a registered professional engineer employed by Nucor Building Systems and does not serve as a construction document unless signed, sealed and shall not be construed as such.

SHEET
E12 of 12

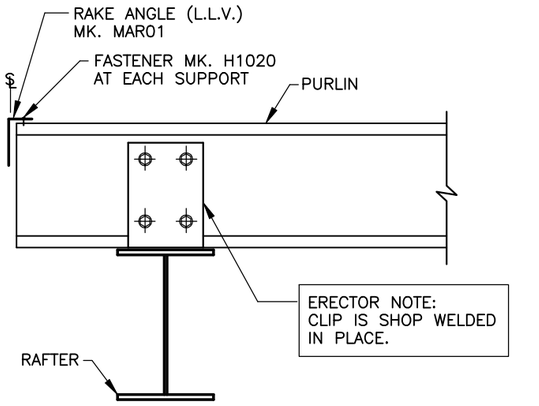

WELDED CLIP @ ENDWALL RAFTER

USE (4) 1/2" X 1 1/2" A307
BOLTS H0500/NUTS H0400
SEE ERECTOR NOTE FOR TYP. WASHER REQUIREMENTS

A7

BB0050

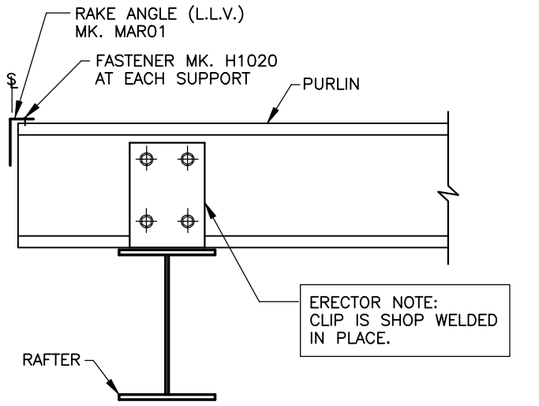

WELDED CLIP @ R/F ENDWALL

USE (4) 1/2" X 1 1/2" A307
BOLTS H0500/NUTS H0400
SEE ERECTOR NOTE FOR TYP. WASHER REQUIREMENTS

A10

BB0050

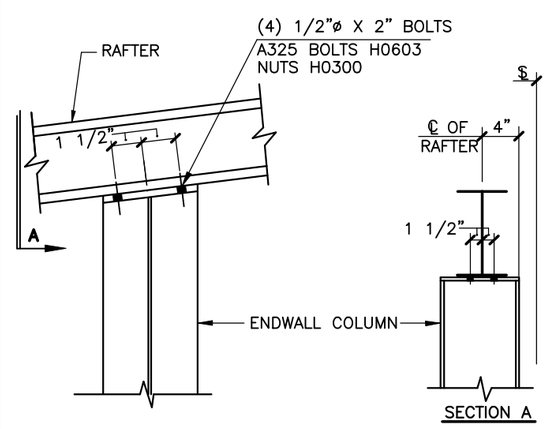

EW COLUMN TO RAFTER CONN

(CONTINUOUS RAFTER)
SEE ERECTOR NOTE FOR TYP. WASHER REQUIREMENTS

B5

AC0045

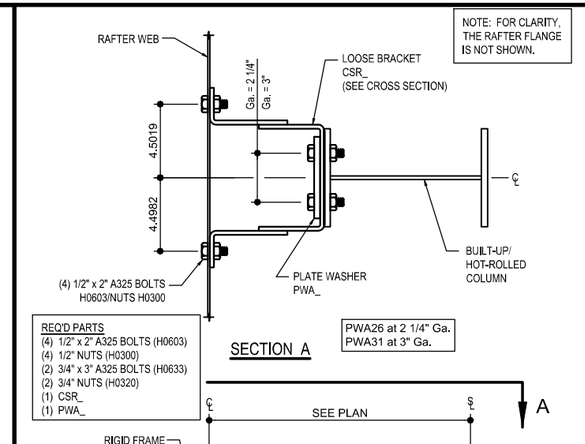

ENDWALL COL TO EXP. EW RAFTER CONNECTION

10" DEEP (MIN.) BU/HR COLUMN AND COLUMN EXTENSION AT FLUSH/INSET GIRTS
REFERENCE ERECTOR NOTE FOR TYPICAL WASHER REQUIREMENTS

B13

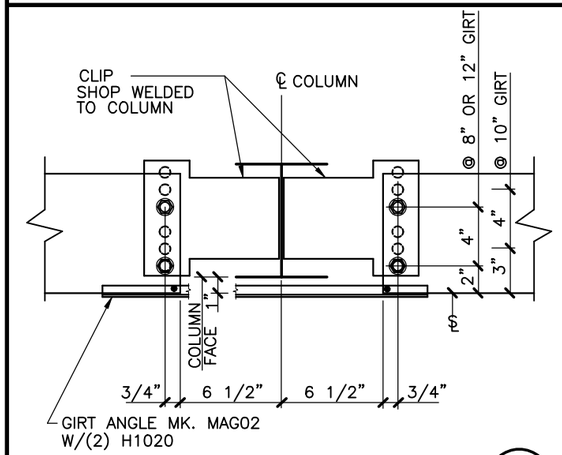

INSET GIRT @ INTERIOR BAY COL.

USE (4) 1/2" X 1 1/2" A307
BOLTS H0500/NUTS H0400
SEE ERECTOR NOTE FOR TYP. WASHER REQUIREMENTS

C4

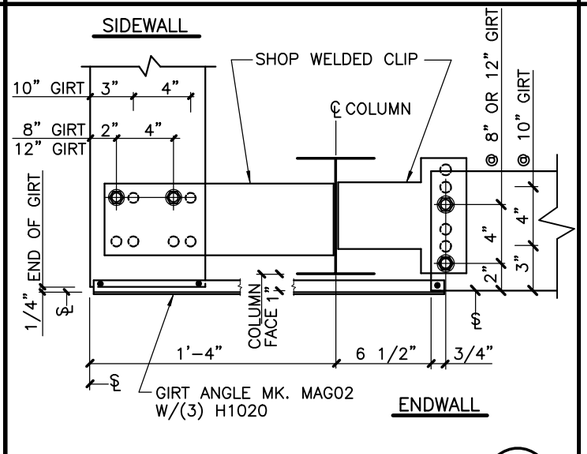

CORNER GIRT DETAIL

USE (4) 1/2" X 1 1/2" A307
BOLTS H0500/NUTS H0400
SEE ERECTOR NOTE FOR TYP. WASHER REQUIREMENTS

D6

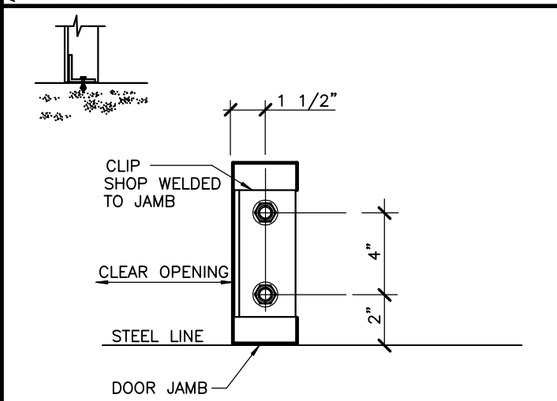

JAMB TO FINISH FLOOR CONN

ATTACHMENT TO SLAB BY OTHERS

E9

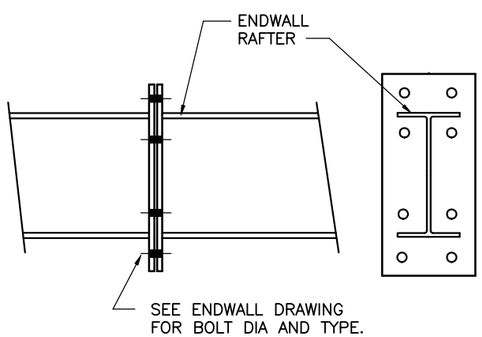

ENDWALL RAFTER SPLICE

F9

AC0170

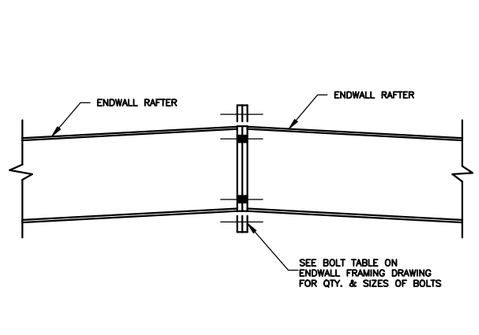

EW RAFTER RIDGE CONNECTION

W/O COLUMN

F11

AC0160

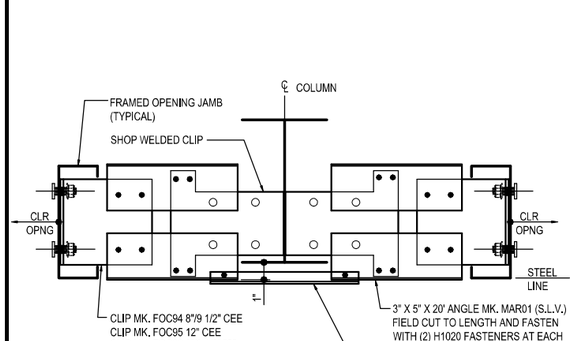

COLD FORMED JAMB SHOWN. HOT-ROLL SIMILAR

SW OR EW GIRT DETAIL

FRAMED OPENINGS AT INSET GIRT CONDITION
USE (4) 1/2" x 1 1/4" A307 BUTTON HEAD BOLTS H0510/NUTS H0400
REFERENCE ERECTOR NOTE FOR TYPICAL WASHER REQUIREMENTS

G1

ISSUE	DWN	CHK	ENG	PE	DATE
CONST. AB PLAN	NBS	EOP	CBM		7/24/2023
BUILDING DEPARTMENT REVIEW	WBS	DAN	CBM		7/31/2023

NUCOR BUILDING SYSTEMS
300 INDUSTRIAL PARKWAY, WATERLOO, IN 46793
PHONE: (260) 837-7891 FAX: (260) 837-7384
PO BOX 1006, 200 WHETSTONE RD, SWANSEA, SC 29160
PHONE: (803) 568-2100 FAX: (803) 568-2121
600 APACHE TRAIL, TERRELL, TX 75160
PHONE: (972) 524-8484 FAX: (972) 524-8417
1050 WATER LANE, BRIGHAM CITY, UT 84302
PHONE: (435) 919-3100 FAX: (435) 919-3101

PROJECT NAME: WENDOVER FS #13 REPLACEMENT
WENDOVER, NV

CUSTOMER NAME: MICHAEL CLAY CORP
WINNEMUCCA, NV

JOB NUMBER: U23G0555A

SHEET TITLE

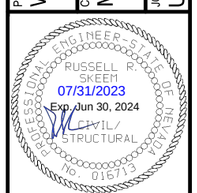

This set of plans, and/or the materials described herein, prepared by Nucor Building Systems, a division of Nucor Corporation, and the drawings and the information shown thereon, (collectively are the "Documents") are the property of Nucor Building Systems and are not to be used in any way by those who register professional engineers or their employees except those Buildings Systems is employed by Nucor Buildings Systems and does not serve as the registered engineer of record on record and shall not be construed as such.

SHEET
D1 of 20

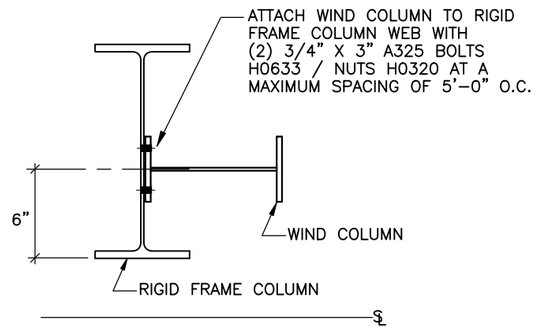

WIND COLUMN TO RIGID FRAME — H9

SEE ERECTOR NOTE FOR TYP. WASHER REQUIREMENTS

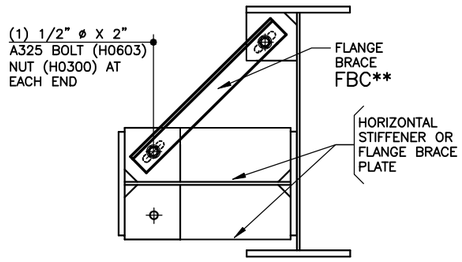

TYPICAL FLANGE BRACE CONNECTION AT FRAME COLUMN AND PORTAL COLUMN — H12

AJ0050

(REFER TO CROSS SECTIONS & ELEVATIONS FOR PART NUMBERS)

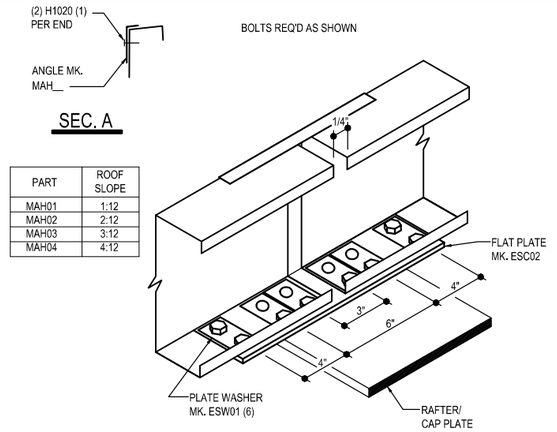

PART	ROOF SLOPE
MAH01	1:12
MAH02	2:12
MAH03	3:12
MAH04	4:12

EAVE STRUT WITH STRUT PLATE — I4

LOW EAVE FLUSH/INSET SW GIRT CONDITION
USE (8) 1/2" X 2" A325 BOLT H0603/ NUT H0300 U.N.O.

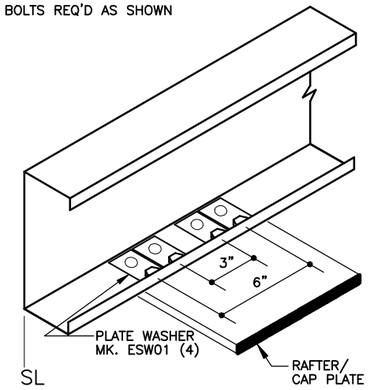

EAVE STRUT — J4

LOW EAVE FLUSH/INSET SW GIRT CONDITION
USE (4) 1/2" X 2" A325
BOLT H0603/NUT H0300 U.N.O.

PART #	MTRL SIZE	MTRL THICK.
S8Z84	8" ZEE	.060 MIN.
S8C84	8" CEE	.060 MIN.
S1Z84	10" ZEE	.060 MIN.
S1C84	10" CEE	.060 MIN.
S2Z84	12" ZEE	.075 MIN.
S2C84	12" CEE	.075 MIN.

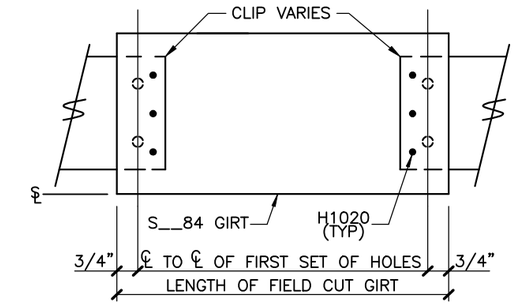

UNPUNCHED SHORT GIRT DETAIL — K2

FIELD CUT TO LENGTH AND FASTEN WITH (3) H1020 AT EACH END

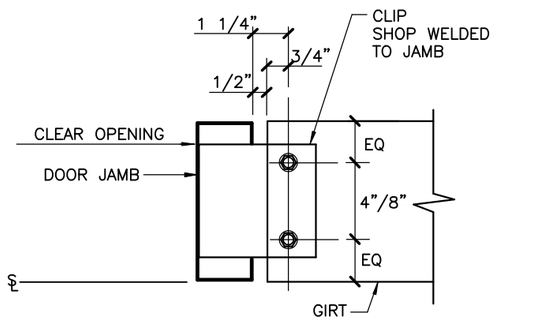

GIRT TO JAMB CONNECTION — K3

USE (2) 1/2" X 1 1/2" A307
BOLTS H0500/NUTS H0400
SEE ERECTOR NOTE FOR TYP. WASHER REQUIREMENTS

ERECTOR NOTE:
PRE-DRILL HOLES @ NESTED ZEE GIRTS & DOUBLE CEE GIRTS IF REQUIRED.

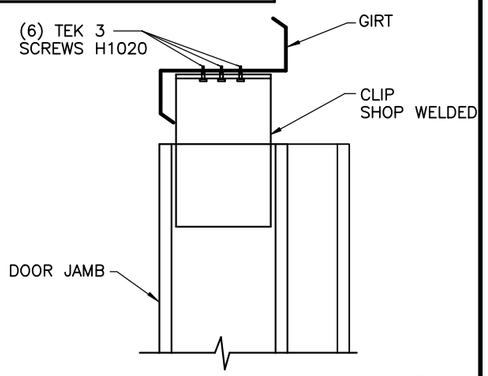

DOOR JAMB TO GIRT CONNECTION — L8

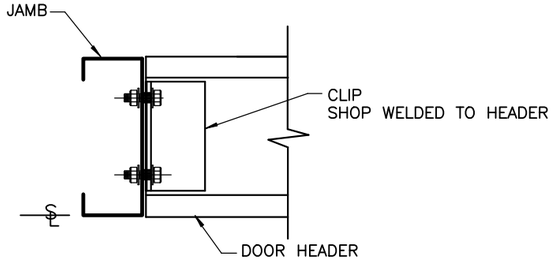

HEADER/SILL TO JAMB CONNECTION — M3

USE (2) 1/2" X 1 1/2" A307
BOLTS H0500/NUTS H0400 (U.N.O.)
SEE ERECTOR NOTE FOR TYP. WASHER REQUIREMENTS

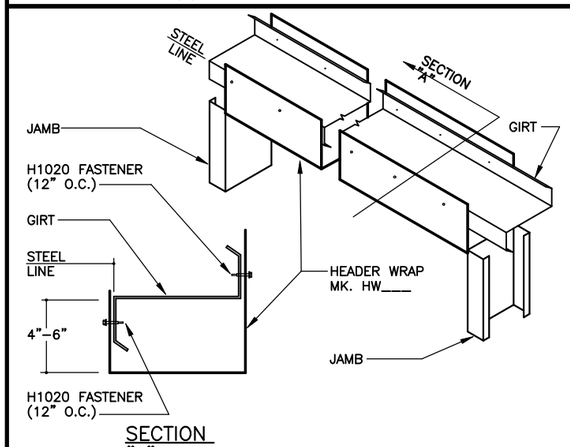

HEADER WRAP DETAIL — M16

CG0025

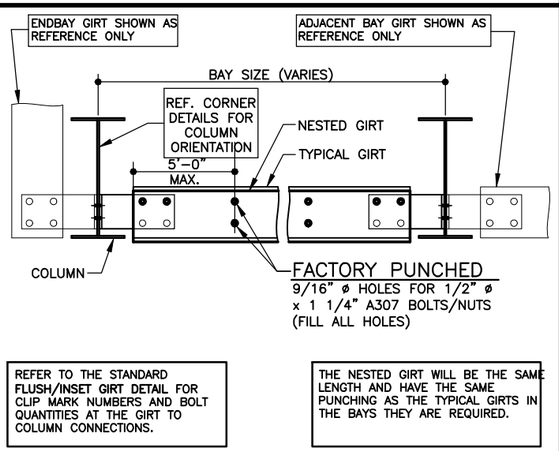

REFER TO THE STANDARD **FLUSH/INSET GIRT DETAIL** FOR CLIP MARK NUMBERS AND BOLT QUANTITIES AT THE GIRT TO COLUMN CONNECTIONS.

THE NESTED GIRT WILL BE THE SAME LENGTH AND HAVE THE SAME PUNCHING AS THE TYPICAL GIRTS IN THE BAYS THEY ARE REQUIRED.

FLUSH/INSET NESTED GIRT DETAIL — N2

- REFERENCE ERECTOR NOTE FOR TYPICAL WASHER REQUIREMENTS
- THE QUANTITY OF 1/2" x 1 1/4" A307 BOLTS (MK. H0500) & NUTS (MK. H0400) VARIES DEPENDING ON THE BAY SIZE.

CM0005

ROD DIAMETER	MARK NUMBER	HILLSIDE WASHERS	FLAT WASHERS	A307/A325 NUTS	COUPLING NUTS
5/8" ø	RD05-__	(2) H0930	(2) H0210	(2) H0310	H0810
3/4" ø	RD06-__	(2) H0930	(2) H0220	(2) H0320	H0820
7/8" ø	RD07-__	(2) H0930	(2) H0230	(2) H0325	H0830
1" ø	RD08-__	(2) H0960	(2) H0240	(2) H0330	H0840
1 1/8" ø	RD09-__	(2) H0960	(2) H0250	(2) H0450	H0850
1 1/4" ø	RD10-__	(2) H0960	(2) H0260	(2) H0340	H0860

SEE PLANS AND ELEVATIONS FOR BRACING MARK NUMBERS

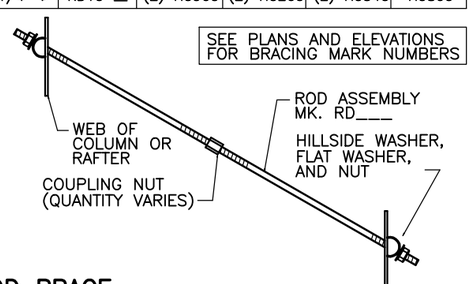

ROD BRACE — Q3

WEB TO WEB

AF0010

ISSUE	DWN	CHK	ENG	PE	DATE
CONST. AB PLAN	NBS	EOP	CBM		7/24/2023
BUILDING DEPARTMENT REVIEW	WBS	DAN	CBM		7/31/2023

NUCOR BUILDING SYSTEMS
300 INDUSTRIAL PARKWAY, WATERLOO, IN 46793
PHONE: (260) 837-7891 FAX: (260) 837-7384
PO BOX 1006, 200 WHETSTONE RD, SWANSEA, SC 29160
PHONE: (803) 568-2100 FAX: (803) 568-2121
600 APACHE TRAIL, TERRELL, TX 75160
PHONE: (972) 524-1781 FAX: (972) 524-1447
1050 WATER LANE, BRIGHAM CITY, UT 84302
PHONE: (435) 919-3100 FAX: (435) 919-3101

PROJECT NAME: WENDOVER FS #13 REPLACEMENT
WENDOVER, NV

CUSTOMER NAME: MICHAEL CLAY CORP
WINNEMUCCA, NV

JOB NUMBER: U23G0555A

SHEET TITLE:

RUSSELL R. SKEEM — 07/31/2023 — Exp. Jun 30, 2024 — CIVIL/STRUCTURAL

This set of plans and/or specifications is the property of Nucor Building Systems, a division of Nucor Corporation. The drawings and the information contained therein are the property of Nucor Building Systems and may be used by a purchaser or owner of a Nucor Building Systems building for information regarding the erection of such building. Any other use or reproduction of these drawings is prohibited. No right is conveyed to any party to make any use of these drawings except as authorized by Nucor Building Systems and does not serve as a substitute for any engineered drawing required by law. These drawings are not to be used for construction purposes unless released for construction by Nucor Building Systems and shall not be construed as such.

SHEET: D2 of 20

TYPICAL FIELD WELD REQUIREMENTS ERECTOR NOTE:

(UNLESS NOTED OTHERWISE ON DRAWINGS)

ALL FIELD WELDING **MUST BE PERFORMED BY AWS/CWB CERTIFIED WELDERS WHO ARE QUALIFIED** FOR THE WELDING PROCESSES AND POSITIONS INDICATED.

ALL WORK MUST BE **COMPLETED AND INSPECTED IN ACCORDANCE WITH THE APPLICABLE AWS/CWB SPECIFICATIONS.**

WELD ELECTRODES USED FOR THE SMAW (OR STICK) WELD PROCESS **MUST BE 70 KSI/483 MPa MATERIAL AND LOW HYDROGEN CONTENT.**

GALVANIZED STEEL FIELD WELDING RECOMMENDATIONS

PREPARATION OF WELD AREA

AWS D–19.0, WELDING ZINC COATED STEEL, CALLS FOR WELDS TO BE MADE ON STEEL THAT IS FREE OF ZINC IN THE AREA TO BE WELDED. FOR GALVANIZED STRUCTURAL COMPONENTS, THE ZINC COATING SHOULD BE REMOVED AT LEAST ONE TO FOUR INCHES (2.5–10 cm) FROM EITHER SIDE OF THE INTENDED WELD ZONE AND ON BOTH SIDES OF THE WORKPIECE. GRINDING BACK THE ZINC COATING IS THE PREFERRED AND MOST COMMON METHOD; BURNING THE ZINC AWAY OR PUSHING BACK THE MOLTEN ZINC FROM THE WELD AREA ARE ALSO EFFECTIVE.

TOUCH–UP OF WELD AREA

WELDING ON GALVANIZED SURFACES DESTROYS THE ZINC COATING ON AND AROUND THE WELD AREA. RESTORATION OF THE AREA WILL BE PERFORMED IN ACCORDANCE WITH ASTM A 780, STANDARD PRACTICE FOR REPAIR OF DAMAGED AND UNCOATED AREAS OF HOT–DIP GALVANIZED COATINGS, WHICH SPECIFIES THE USE OF PAINTS CONTAINING ZINC DUST, ZINC–BASED SOLDERS OR SPRAYED ZINC. ALL TOUCHUP AND REPAIR METHODS ARE CAPABLE OF BUILDING A PROTECTIVE LAYER TO THE THICKNESS REQUIRED BY ASTM A 780.

SAFETY & HEALTH

WHEN WELDING DIRECTLY ON GALVANIZED STEEL IS UNAVOIDABLE, OSHA PERMISSIBLE EXPOSURE LIMITS (PELS) MAY BE EXCEEDED AND EVERY PRECAUTION, INCLUDING HIGH–VELOCITY CIRCULATING FANS WITH FILTERS, AIR RESPIRATORS AND FUME–EXTRACTION SYSTEMS SUGGESTED BY AWS, SHOULD BE EMPLOYED. FUMES FROM WELDING GALVANIZED STEEL CAN CONTAIN ZINC, IRON, AND LEAD. FUME COMPOSITION TYPICALLY DEPENDS ON THE COMPOSITION OF THE MATERIALS USED, AS WELL AS THE HEAT APPLIED BY THE PARTICULAR WELDING PROCESS. IN ANY EVENT, GOOD VENTILATION MINIMIZES THE AMOUNT OF EXPOSURE TO FUMES.

PRIOR TO WELDING ON ANY METAL, CONSULT ANSI/ASC Z–49.1, SAFETY IN WELDING, CUTTING AND ALLIED PROCESSES, WHICH CONTAINS INFORMATION ON THE PROTECTION OF PERSONNEL AND THE GENERAL AREA, VENTILATION AND FIRE PREVENTION.

INFORMATION COURTESY OF AMERICAN GALVANIZERS ASSOCIATION

TYPICAL FIELD WELD REQUIREMENTS

NAA0040

COLLATERAL DEAD LOADS, UNLESS OTHERWISE NOTED, ARE ASSUMED TO BE UNIFORMLY DISTRIBUTED. WHEN SUSPENDED SPRINKLER SYSTEMS, LIGHTING, HVAC EQUIPMENT, CEILINGS, ETC. ARE SUSPENDED FROM ROOF MEMBERS, CONSULT ENGINEER OF RECORD IF THESE CONCENTRATED LOADS EXCEED 500 POUNDS (USING THE WEB MOUNT DETAIL) OR 200 POUNDS (USING THE FLANGE MOUNT DETAIL), OR IF INDIVIDUAL MEMBERS ARE LOADED SIGNIFICANTLY MORE THAN OTHERS.

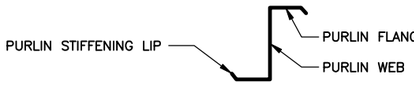

GENERAL RESTRICTION:

UNDER NO CIRCUMSTANCES CAN THE PURLIN STIFFENING LIP BE FIELD MODIFIED FROM THE FACTORY SUPPLIED CONDITION. ALSO DO NOT HANG ANYTHING FROM PURLIN STIFFENING LIP.

OPTIONS FOR SUPPORT ATTACHMENTS

OPTION A (200 LBS MAX)
DRILL SUPPORT THROUGH THE BOTTOM FLANGE OF THE PURLIN.

OPTION B (500 LBS MAX)
SUPPORT ANGLE OR SOME OTHER TYPE OF BRACKET. (NOT BY NBS) SUPPORT THROUGH PURLIN WEB.

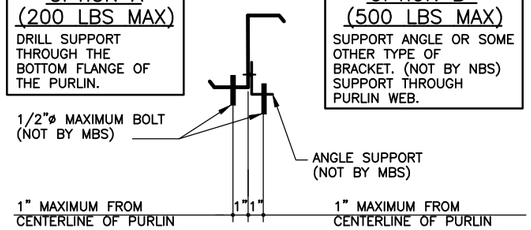

OPTION C: (200 LBS MAX)
IF PURLIN FLANGE SUPPORT CLAMPS ARE USED.

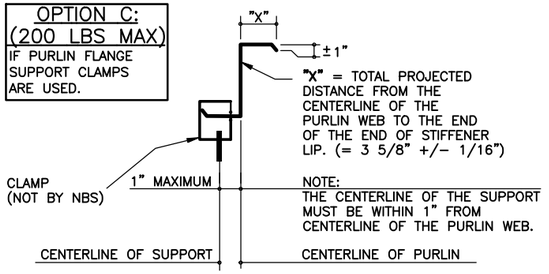

B00010

PURLIN SUPPORT METHODS

NBD0130

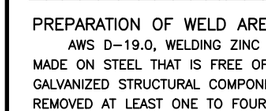

SLOT TO SLOT CONNECTIONS

WASHERS ARE REQUIRED ON BOTH SIDES OF MATERIAL IF SLOTS ARE USED ON BOTH SIDES (NOTE LAPPED ZEE MEMBER EXCEPTION).

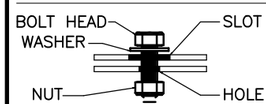

SLOT TO HOLE CONNECTIONS

ONE WASHER REQUIRED ON SLOTTED SIDE ONLY.

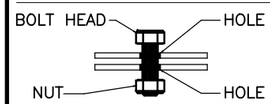

HOLE TO HOLE CONNECTIONS

NO WASHERS ARE REQUIRED WHEN SLOTS ARE NOT USED.

WASHER PART NUMBERS

H0200 – 1/2" FLAT WASHER	H0240 – 1" FLAT WASHER
H0210 – 5/8" FLAT WASHER	H0250 – 1 1/8" FLAT WASHER
H0220 – 3/4" FLAT WASHER	H0260 – 1 1/4" FLAT WASHER
H0230 – 7/8" FLAT WASHER	

TYPICAL WASHER REQUIREMENTS ERECTOR NOTE

(UNLESS NOTED OTHERWISE ON DRAWINGS)

NAA0030

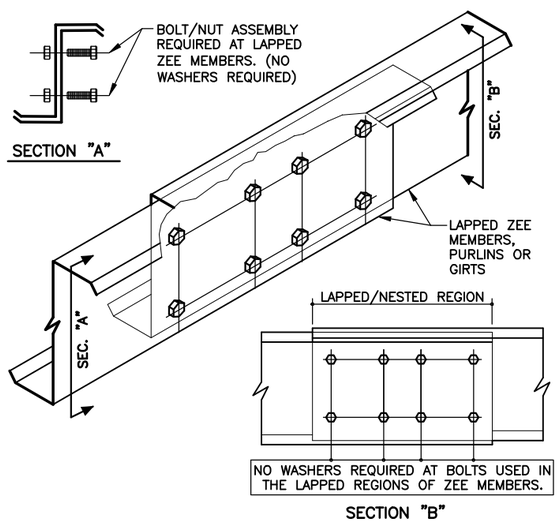

FBC__ INDICATES LENGTH OF FLANGE BRACE IN INCHES

BLANK LENGTH

FBH– COUNTER (1–999)
SPECIAL LENGTH FLANGE BRACE

BLANK LENGTH

FBE__ COUNTER (01–07)
COPED FLANGE BRACE

BLANK LENGTH

FBJ– COUNTER (1–999)
SPECIAL LENGTH COPED FLANGE BRACE

BLANK LENGTH

FBF– COUNTER (1–999)
3" X 3" 1/4" BRACE ANGLE

BLANK LENGTH

FBK__ INDICATES LENGTH OF FLANGE BRACE IN INCHES

BLANK LENGTH

AG0003

FLANGE BRACE MARK NUMBERS

NAG0003

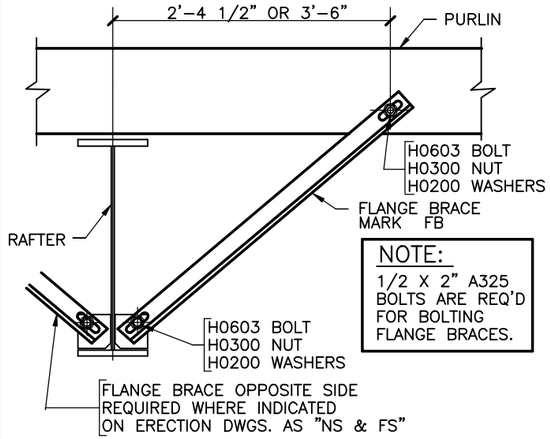

AG0010

TYP FLANGE BRACE @ PURLIN & RAFTER

NOTE: SEE PLANS AND ELEVATIONS FOR FLANGE BRACE PART MARKS

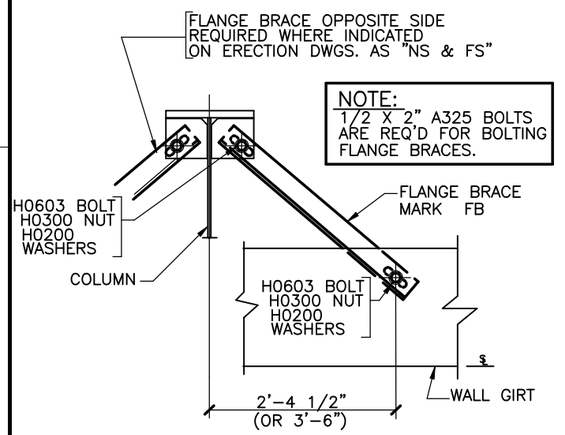

A60030

TYP FLANGE BRACE @ BU COL & GIRT

NOTE: SEE PLANS AND ELEVATIONS FOR FLANGE BRACE PART MARKS

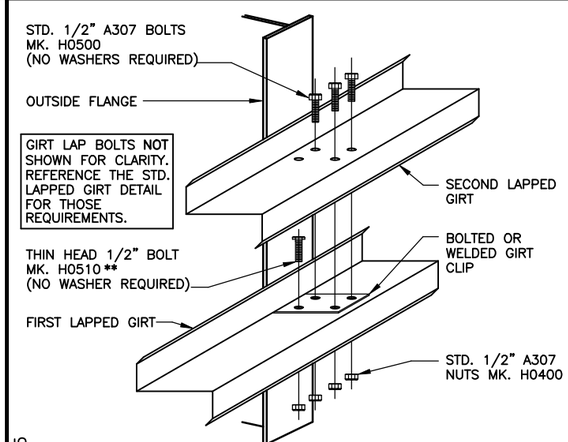

CC0015

LAPPED GIRT DETAIL

LAPPED GIRTS @ INTERIOR BAY COLUMNS

** THE THIN HEAD 1/2" A307 BOLT MUST BE INSTALLED INTO THE FIRST GIRT AND CLIP OF A LAPPED CONDITION. THE BOLT/NUT ASSEMBLY MUST BE WRENCH TIGHT PRIOR TO THE SECOND LAPPED GIRT BEING INSTALLED.

ERECTOR NOTE: UNLESS SPECIFICALLY NOTED OTHERWISE, STANDARD ZEE GIRT ORIENTATION IS TO HAVE THE GIRT TOED DOWN AT THE STEEL LINE AS SHOWN IN THE DETAIL BELOW.

UNLESS SPECIFICALLY NOTED OTHERWISE, STANDARD CEE GIRT ORIENTATION IS TO HAVE THE GIRT TOED UP AS SHOWN IN THE DETAIL BELOW. STANDARD CLIP ATTACHMENT IS BELOW THE GIRT, HOWEVER SOME DETAILS REQUIRE THAT THE CLIP BE ABOVE THE GIRT. (REFER TO THE GIRT DETAILS ON THE ERECTION DRAWINGS FOR REQUIREMENTS) BOTH CLIP ATTACHMENTS ARE SHOWN IN THE DETAIL BELOW.

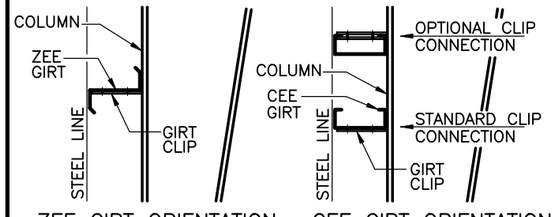

ZEE GIRT ORIENTATION

CEE GIRT ORIENTATION

CC0005

STANDARD GIRT ORIENTATION DETAIL

NOTE: BYPASS GIRT CONDITION IS SHOWN FOR REFERENCE ONLY. YOUR PROJECT MAY HAVE FLUSH OR INSET GIRTS.

ISSUE	DWN	CHK	ENG	PE	DATE
CONST. AB PLAN	NBS	EOP	CBM		7/24/2023
BUILDING DEPARTMENT REVIEW	WBS	DAN	CBM		7/31/2023

NUCOR BUILDING SYSTEMS
300 INDUSTRIAL PARKWAY, WATERLOO, IN 46793
PHONE: (260) 837–7891 FAX: (260) 837–7384
PO BOX 1000, 200 WHETSTONE RD, SWANSEA, SC 29160
PHONE: (803) 568–2100 FAX: (803) 568–2121
600 APACHE TRAIL, TERRELL, TX 75160
PHONE: (214) 432–0300 FAX: (214) 432–0417
1050 WATERS LANE, BRIGHAM CITY, UT 84302
PHONE: (435) 919–3100 FAX: (435) 919–3101

PROJECT NAME: WENDOVER FS #13 REPLACEMENT
WENDOVER, NV

CUSTOMER NAME: MICHAEL CLAY CORP
WINNEMUCCA, NV

JOB NUMBER: U23G0555A

SHEET TITLE

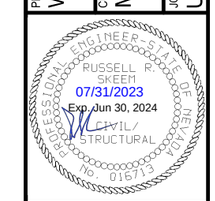

This set of plans (only) is the materials designed and detailed by Nucor Building Systems, a division of Nucor Corporation. The drawings and the information shown thereon are the property of Nucor Building Systems and are not to be used on any other project. Nucor Building Systems is employed by Nucor Buildings Systems and does not serve as the registered professional engineer of record and shall not be construed as such.

SHEET

D3 of 20

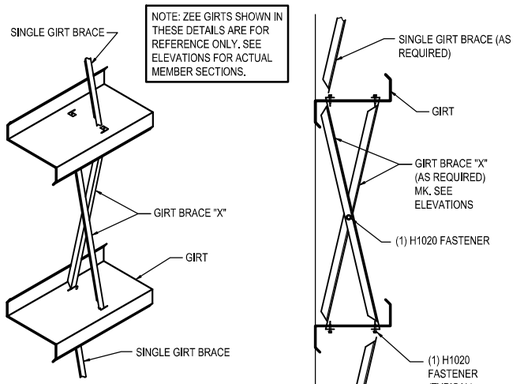

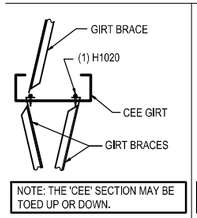

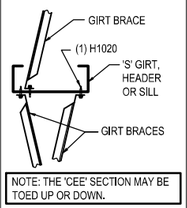

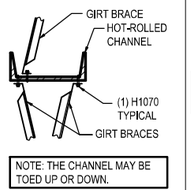

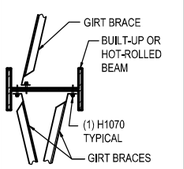

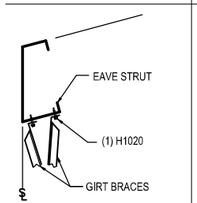

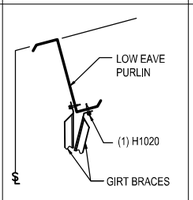

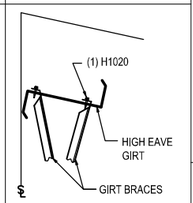

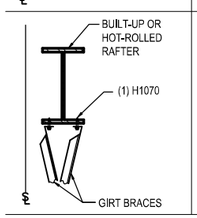

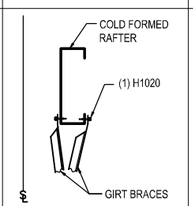

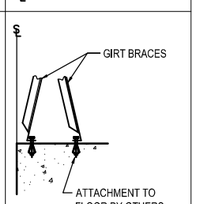

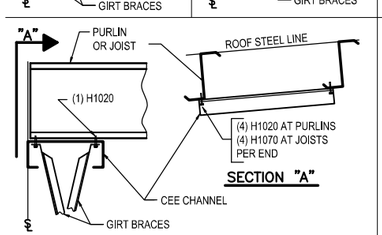

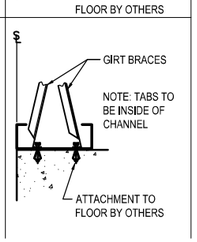

INSTALLATION INSTRUCTIONS

1) FOR SINGLE GIRT BRACE, INSERT ANGLE INTO THE FACTORY PUNCHED SLOTS. BEND TABS AS SHOWN AND FASTEN THROUGH TAB WITH (1) H1020 FASTENER PER END.

2) FOR GIRT BRACE "X", INSERT ANGLES "BACK-TO-BACK" INTO THE FACTORY PUNCHED SLOTS. BEND TABS AS SHOWN AND FASTEN THROUGH TAB WITH (1) H1020 FASTENER PER END.

3) CONNECT GIRT BRACE "X" AT THE ANGLE INTERSECTION WITH (1) H1020 FASTENER.

4) GIRT BRACING IS NOT TO DISTORT OR ALTER GIRTS FROM THIER INTENDED SHAPE AND LOCATION.

5) SEE DETAILS BELOW FOR ADDITIONAL INFORMATION WHEN ATTACHING TO ALTERNATE FRAMING MEMBERS.

PLAN VIEW OF (2) GIRT BRACING ROWS PER BAY

1) INSTALL (2) REQUIRED ROWS OF GIRT BRACING REGARDLESS OF THE BAY LENGTH. GIRT BRACING IS SPACED AS SHOWN IN THE DETAIL BELOW.

2) SEE WALL ELEVATION(S) FOR GIRT BRACING MARK NUMBERS, QUANTITIES AND LOCATIONS.

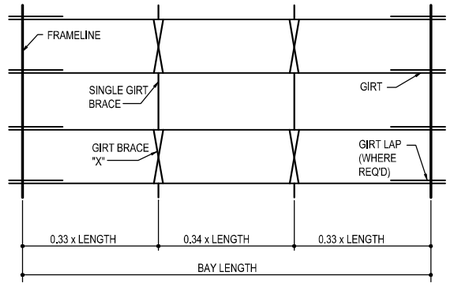

PLAN VIEW OF (3) GIRT BRACING ROWS PER BAY

1) INSTALL (3) REQUIRED ROWS OF GIRT BRACING REGARDLESS OF THE BAY LENGTH. GIRT BRACING IS SPACED AS SHOWN IN THE DETAIL BELOW.

2) SEE WALL ELEVATION(S) FOR GIRT BRACING MARK NUMBERS, QUANTITIES AND LOCATIONS.

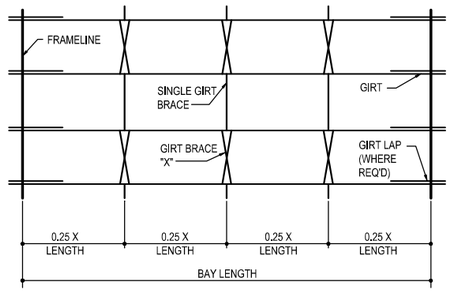

PLAN VIEW OF (4) GIRT BRACING ROWS PER BAY

1) INSTALL (4) REQUIRED ROWS OF GIRT BRACING REGARDLESS OF THE BAY LENGTH. GIRT BRACING IS SPACED AS SHOWN IN THE DETAIL BELOW.

2) SEE WALL ELEVATION(S) FOR GIRT BRACING MARK NUMBERS, QUANTITIES AND LOCATIONS.

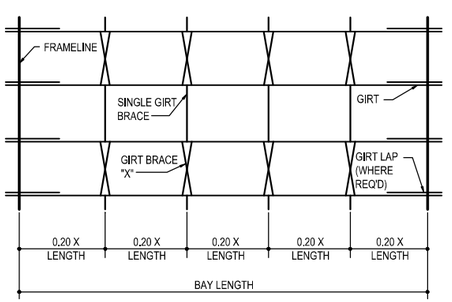

GIRT BRACING ATTACHMENT METHODS

ISSUE	DWN	CHK	ENG	PE	DATE
CONST. AB PLAN	NBS	EOP	CBM		7/24/2023
BUILDING DEPARTMENT REVIEW	WBS	DAN	CBM		7/31/2023

NUCOR BUILDING SYSTEMS
300 INDUSTRIAL PARKWAY, WATERLOO, IN 46793
PHONE: (260) 837-7891 FAX: (260) 837-7384
PO BOX 1006, 200 WHETSTONE RD, SWANSEA, SC 29160
PHONE: (803) 568-2100 FAX: (803) 568-2121
600 APACHE TRAIL, TERRELL, TX 75160
PHONE: (972) 524-4417 FAX: (972) 524-4445
1050 WATERY LANE, BRIGHAM CITY, UT 84302
PHONE: (435) 919-3100 FAX: (435) 919-3101

PROJECT NAME
WENDOVER FS #13 REPLACEMENT
WENDOVER, NV

CUSTOMER NAME
MICHAEL CLAY CORP
WINNEMUCCA, NV

JOB NUMBER
U23G0555A

SHEET TITLE

ENGINEER STATE OF UTAH PROFESSIONAL
RUSSELL R. SKEEN
07/31/2023
Exp. Jun 30, 2024
CIVIL/STRUCTURAL
No. 016713

This set of plans and/or specifications is submitted only to the materials described herein by Nucor Building Systems, a division of Nucor Corporation. The drawings and the specifications are instruments of service and are the product of Nucor Building Systems. We register professional engineers who have prepared these drawings is employed by Nucor Buildings Systems and does not serve as the engineer of record of record and shall not be construed as such.

SHEET
D4 of 20

SUGGESTED INITIAL PROCEDURES FOR INSTALLER:

1) CHECK ALL APPLICABLE FEDERAL, STAE AND LOCAL CODES TO VERIFY COMPLIANCE WITH THE CODE.

2) BE CERTAIN THAT SITE CONDITIONS ARE SUCH THAT SAFE WORKING PRACTICES ARE STRICTLY OBSERVED.

3) REVIEW ALL INSTALLATION DRAWINGS AND ASSOCIATED PROJECT DOCUMENTS.

4) CONSULT WITH THE GENERAL CONTRACTOR, DESIGN ENGINEER, ARCHITECT AND/OR OWNER TO CONFIRM THOSE RECOMMENDED.

5) COMPLY WITH ALL SAFETY REGULATIONS.

IT IS THE RESPONSIBLILITY OF THE DESIGNER / CONTRACTOR / INSTALLER TO ENSURE THAT THE DETAILS AND INSTALLATION PROCEDURES ARE ADAPTED TO MEET PARTICULAR BUILDING REQUIREMENTS.
THE METAL BUILDING / PANEL SUPPLIER SHALL NOT BE HELD LIABLE FOR ANY AND ALL CLAIMS ARISING FROM LACK OF PROPER INSTALLATION. THE DESIGNER / INSTALLER MUST BE AWARE OF AND ALLOW FOR EXPANSION AND CONTRACTION OF WALL PANELS WHEN DESIGNING AND/OR INSTALLING WALL PANELS.

SOME FIELD CUTTING IS PART OF NORMAL ERECTION WORK. WORKMANSHIP SHALL CONFORM TO THE HIGHEST INDUSTRY STANDARDS. A CERTAIN AMOUNT OF WAVINESS CALLED "OIL CANNING" MAY EXIST IN THE PANEL. MINOR WAVINESS IS NOT SUFFICIENT CAUSE FOR REJECTION AND DOES NOT AFFECT THE STRUCTURAL INTEGRITY OF THE PANEL. MINIMIZING OR ELIMINATION THIS EFFECT CAN BE ACCOMPLISHED BY USING SIMPLE INDUSTRY STANDARD PROCEDURES DURING SURFACE PREPARATION.

NOTES FOR HANDLING PANELS AND COMPONENTS:

INSULATED PANELS ARE CAREFULLY INSPECTED AND BUNDLED PRIOR TO LOADING FOR SHIPMENT. IT IS THE RESPONSIBILITY OF THE TRANSPORTATION COMPANY TO DELIVER THESE COMPONENTS UNDAMAGED. IT IS THE CONSIGNEE'S RESPONSIBILITY TO INSPECT THE SHIPMENT FOR DAMAGE AND SHORTAGES WHEN IT IS RECEIVED.

WHEN A SHIPMENT IS RECEIVED, CHECK EACH ITEM AGAINST THE BILL OF LADING FOR QUANTITY, LENGTH, DAMAGE, ETC. IF A SHORTAGE OR DAMAGE IS FOUND, MAKE SURE A NOTATION OF IT IS MADE ON THE BILL OF LADING AND SIGNED BY THE DRIVER. THE MANUFACTURE CANNOT BE RESPONSIBLE FOR SHORTAGES OR DAMAGED MATERIALS UNLESS THEY ARE NOTED ON THE BILL OF LADING.

IN THE CASE OF PACKAGED COMPONENTS (SUCH AS CLIPS, FASTENERS, AND SEALANTS, ECT.), THE QUANTITIES ARE MARKED ON THEIR CONTAINER AND SHOULD BE CHECKED AGAINST THE BILL OF MATERIALS.

IT IS THE CUSTOMER'S RESPONSIBILITY TO MAKE ANY DAMAGE CLAIM. IMMEDIATELY NOTIFY THE DESIGNATED CUSTOMER SERVICE COORDINATOR OF ANY SHORTAGES OR DAMAGED MATERIALS. THIS WILL HELP TO MINIMIZE ANY ERECTION DELAYS THAT MAY RESULT FROM THE SHORTAGE OR DAMAGED MATERIALS.

UPON ARRIVAL OF PANELS, FORKLIFTS OR HOISTING EQUIPMENT WILL BE REQUIRED TO UNLOAD AND POSITION THE PANEL BUNDLES AND ACCESSORY CRATES FOR JOBSITE STORAGE AND INSTALLATION.

EXTREME CARE SHOULD BE TAKEN TO AVOID BUMPING THE PANELS WHILE LIFTING AND MANEUVERING. IN ALL CASES PANELS SHOULD NOT DEFLECT SIGNIFICANTLY IN THE LIFTING PROCESS.

IN HANDLING PANELS INDIVIDUALLY, ALL PERSONNEL MUST WEAR THE PROPER CLOTHING, PROTECTIVE EYE WEAR, AND GLOVES.

TO HELP PREVENT DAMAGES TO THE SURFACES AND EDGES:
- ALWAYS LIFT THE PANELS WHEN REMOVING THEM FROM BUNDLES, NEVER DRAG THEM.
- NEVER LIFT THE PANEL FROM THE FLAT POSITION FROM THE HOOK OF THE VERTICAL SEAM.
- DO NOT CARRY PANELS IN THE FLAT POSITION.

UNLOADING:

PANELS ARE SPIRAL WRAPPED WITH STRETCH-FILM AND SHIPPED FLAT. PANEL BUNDLES ARE REINFORCED AT SPECIFIED LIFTING POINTS TO PREVENT DAMAGE WHEN LIFTING. SEE FIGURE'S 1 AND 2 IN THIS SECTION TO DETERMINE WHERE THE LIFTING POINTS ARE FOR THE PANEL BUNDLES.

UNLOADERS MUST TAKE CARE THAT FORKLIFT FORKS ARE LOCATED AT THE PARTICLE BOARD ON THE PANEL BUNDLES BEFORE LIFTING.

EXTREME CARE SHOULD BE TAKEN TO AVOID BUMPING OR DROPPING THE PANELS WHEN LIFTING AND MANEUVERING.

WHEN UNLOADING BUNDLES OF 36'-0" OR LONGER IN LENGTH, TWO OR MORE LIFTING POINTS MAY BE REQUIRED. OVER ENGAGEMENT OF FORKS WILL CAUSE DAMAGE TO THE MATERIALS LOCATED ON THE OPPOSITE SIDE OF THE BUNDLE BEING LIFTED.

WHEN AN OVERHEAD CRANE IS USED, REINFORCED NYLON SLINGS OR STRAPS SHOULD BE USED (NO CHAINS OR CABLES SHOULD COME IN CONTACT WITH THE PANELS), ALONG WITH SUITABLE STIFF INSERTS LOCATED AT TOP AND BOTTOM OF THE BUNDLES AT THE SLING POSITIONS TO PROTECT THE PANELS FROM DAMAGE. ALSO, PLACE FOAM BLOCKS ON THE SIDES OF BUNDLES AT ALL SLING LOCATIONS.

NOTES:

REINFORCED LIFTING POINTS ARE CLEARLY MARKED ON THE PANEL BUNDLE (SEE FIGURES 1 & 2)

LONG LENGTH PANELS HAVE TWO OR MORE LIFTING POINTS (SEE FIGURE 2).

USE EXTREME CARE TO AVOID BUMPING OR DROPPING THE PANELS WHILE LIFTING AND MANEUVERING.

HOIST THE PANELS TO THE ROOF WITH THE AID OF NYLON SLINGS AND A SPREADER BAR TO PREVENT ANY CHANCE OF BENDING OR BUCKLING THE PANELS.

UNLOADING WITH A FORKLIFT:

- OVER ENGAGEMENT OF FORKS WILL CAUSE DAMAGE TO THE MATERIALS LOCATED ON THE OPPOSITE SIDE OF THE BUNDLE BEING LIFTED
- PANELS SHOULD NOT DEFLECT SIGNIFICANTLY IN THE LIFTING PROCESS.
- ENSURE THE FORKS STRADDLE THE DESIGNATED LIFT POINT.
- LIFT BUNDLES ONE AT A TIME WITH THE FORKLIFT

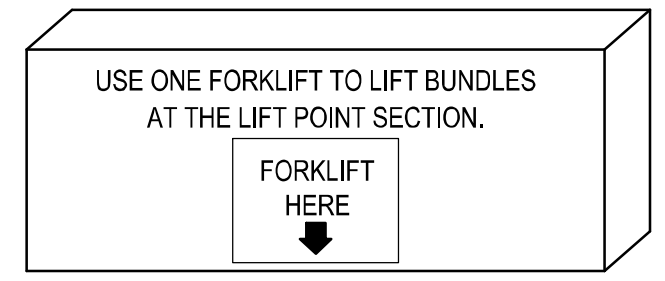

FIGURE 1
STANDARD LENGTH BUNDLES

- BE CAREFUL WHEN UNLOADING OR MOVING LONG LENGTH BUNDLES
- DO NOT POSITION YOUR LIFT AT THE CENTER OF THE BUNDLE, THIS MAY CAUSE PANEL DAMAGE.
- EACH FORKLIFT SHOULD STRADDLE ONE LIFT POINT.

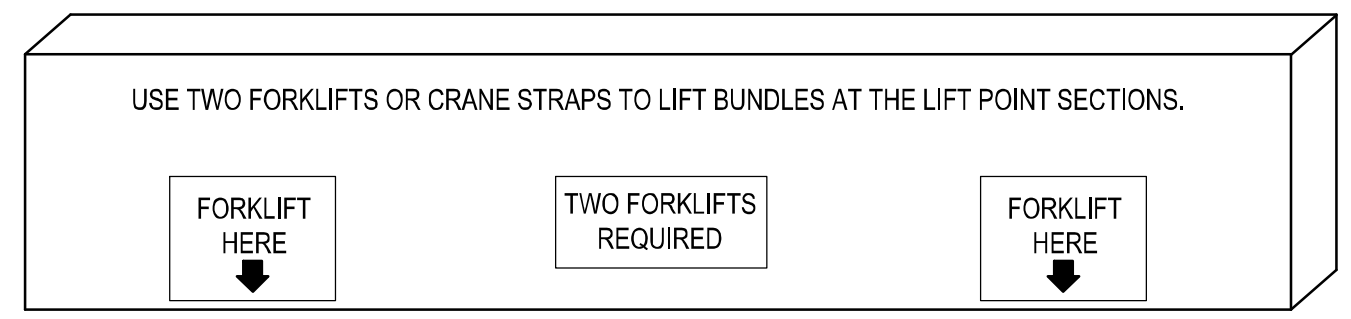

FIGURE 2
LONG LENGTH BUNDLES

UNLOADING WITH AN OVERHEAD CRANE:

- USE NYLON REINFORCED SLINGS OR STRAPS LOCATED AT A MINIMUM OF TWO POINTS ALONG THE LENGTH OF THE BUNDLE FOR CRANE LIFTING OF THE INDIVIDUAL BUNDLES.
- CHAINS OR CABLES SHOULD NOT COME IN CONTACT WITH THE PANELS.
- SUITABLY STIFF INSERTS SHOULD BE LOCATED AT TOP AND BOTTOM OF THE BUNDLES AT THE SLING POSITIONS TO PROTECT THE EDGES OF THE UPPER AND LOWER PANELS.
- PLACE FOAM BLOCKS ON THE SIDES OF BUNDLES AT ALL SLING LOCATIONS.
- WHEN BUNDLES ARE LONGER THAN 15'-0" IT IS SUGGESTED THAT A PROPERLY DESIGNED AND FABRICATED LIFTING BEAM IS USED.

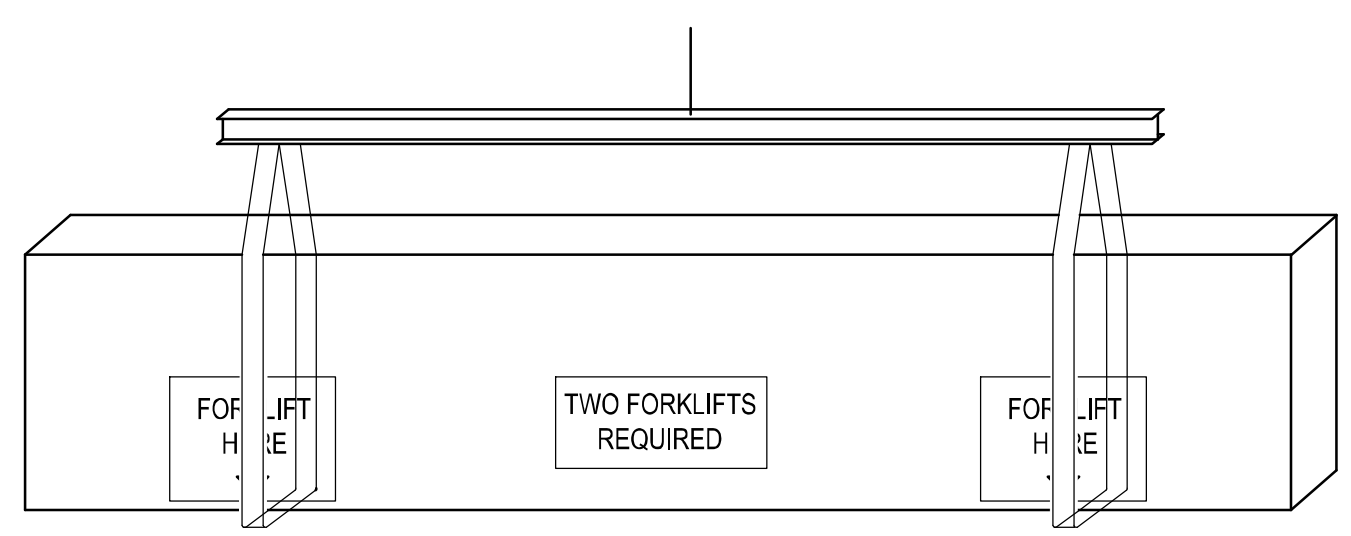

FIGURE 3
BUNDLES UNDER 4,000 LBS AND LESS THAN 44'-0"

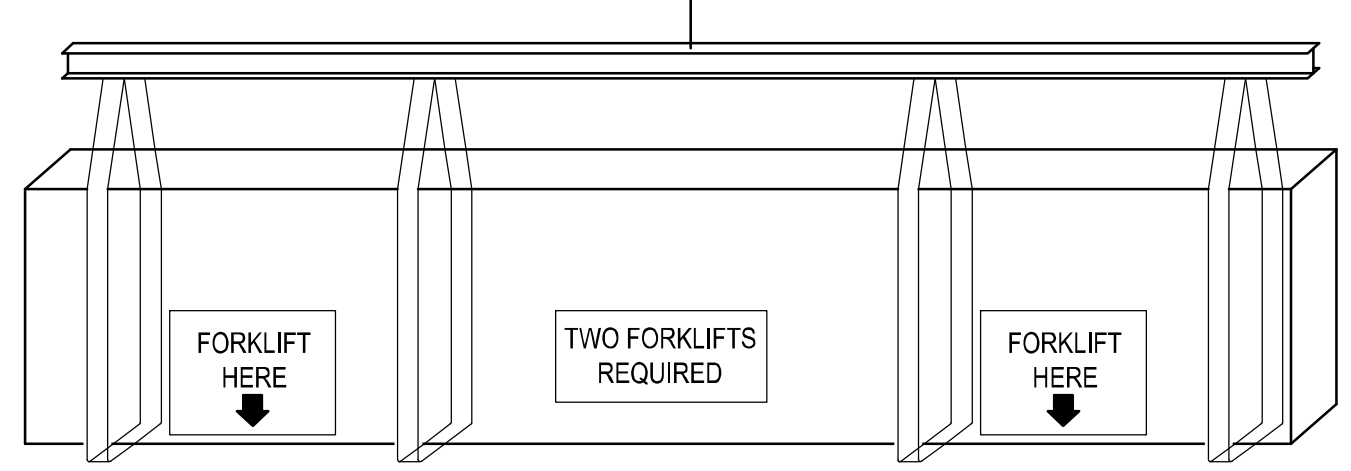

FIGURE 4
BUNDLES OVER 4,000 LBS AND LESS THAN 44'-0"

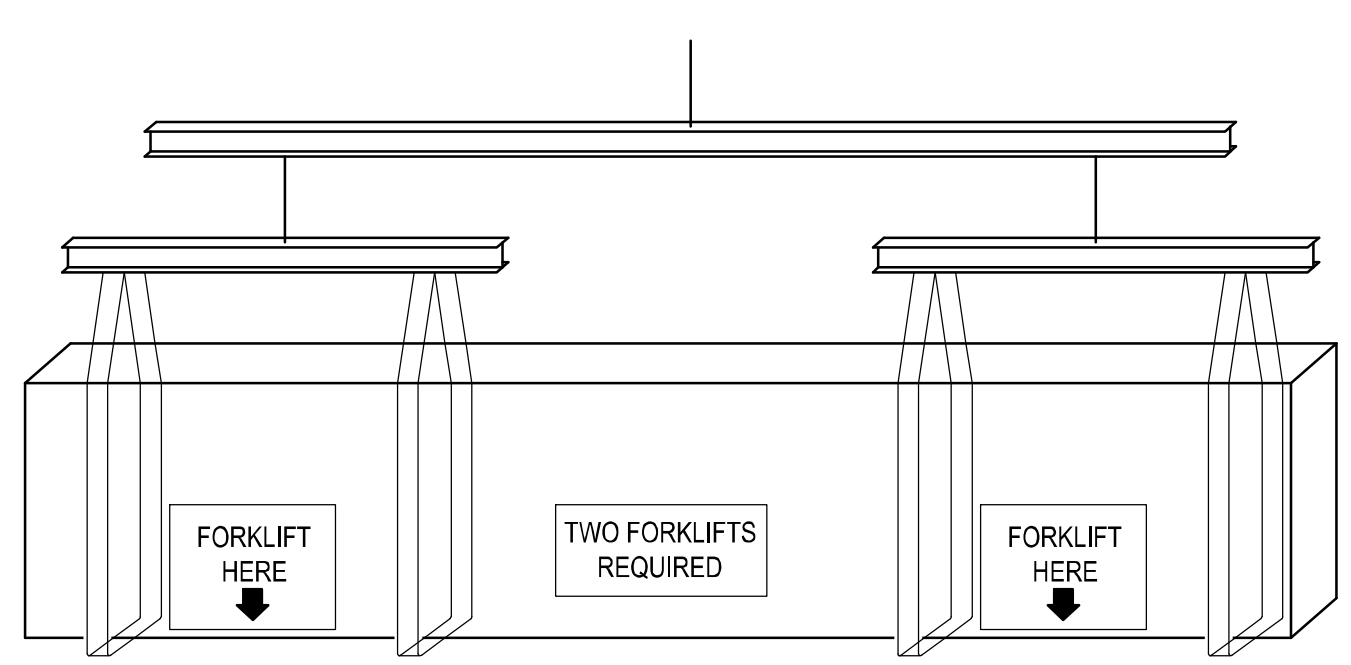

FIGURE 4
BUNDLES OVER 4,000 LBS AND MORE THAN 44'-0"

MANUALLY UNLOADING:

- ON SMALL PROJECTS UNLOADING OF THE PANELS MAY BE CARRIED OUT BY HAND.
  NOTE: SPECIAL CARE SHOULD BE TAKEN WHEN HANDLING. ALWAYS LIFT THE PANELS WHEN REMOVING FROM A BUNDLE, NEVER DRAG THEM.
- WARNING: TO PREVENT JOINT DAMAGE, NEVER LIFT THE PANEL FROM THE FLAT POSITION WITH THE HOOK OF THE VERTICAL SEAM. LIFT FROM THE BOTTOM SKIN.
- IT IS IMPORTANT THAT WHENEVER A PANEL IS HANDLED, PICKED-UP, MOVED OR CARRIED IT SHOULD BE TURNED ON EDGE FIRST. DO NOT CARRY PANEL WHILE FLAT.
- IMPORTANT NOTE: ALL PERSONNEL DOING THESE PROCEDURES MUST WEAR AT ALL TIMES THE PROPER CLOTHING, PROTECTIVE EYE WEAR AND GLOVES.

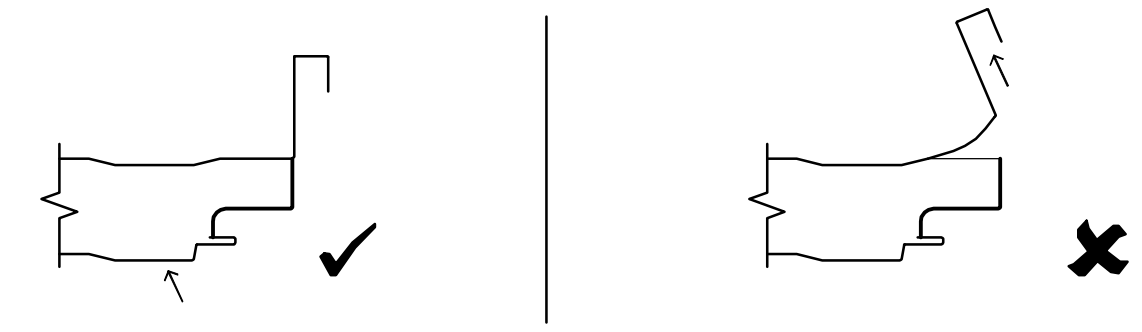

THE METAL BUILDING/PANEL SUPPLIER DOES NOT TAKE ANY RESPONSIBILITY FOR DAMAGE CAUSED FROM MISHANDLING OF PANELS. DAMAGED PANELS SHALL BE REPLACED OR CORRECTED TO APPROVAL OF THE ARCHITECT AND ANY COST INCURRED SHALL BE BORNE BY THE PARTIES RESPONSIBLE FOR THE DAMAGE.

JOBSITE STORAGE:

UPON ACCEPTANCE OF THE SHIPMENT, THE CUSTOMER IS RESPONSIBLE FOR PROPER HANDLING, STORAGE, AND SECURITY OF THE RECEIVED MATERIALS. THE MANUFACTURER IS NOT RESPONSIBLE FOR DAMAGE OR LOSS OF MATERIALS AT THE JOB SITE.

PANELS NOT REQUIRED FOR IMMEDIATE USE SHOULD BE:
- CAREFULLY UNLOAD AND PLACE DIRECTLY IN A PROTECTED STORAGE AREA ON A FIRM, LEVEL SURFACE CLEAR OF DEBRIS, PREFERABLY UNDER WATER PROOF COVER AND SLIT PLASTIC WRAP AT BASE TO ALLOW AIR FLOW, FOR NO LONGER THAN 30 DAYS.
- CUT / SLIT THE BOTTOM OF THE PLASTIC WRAP IN 1'-0" INCREMENTS AT 5'-0" O.C. ALONG THE LENGTH OF THE BUNDLES. A CONTINUOUS CUT / SLIT SHOULD BE MADE ALONG THE WIDTH OF THE BUNDLE.
- ELEVATE WITH WOOD BLOCKING, TO ALLOW AIR CIRCULATION UNDER THE BUNDLE, ON A FIRM, LEVEL SURFACE CLEAR OF DEBRIS, STANDING WATER, DIRECT SUN, AND DRIFTING SNOW.
- SEPARATE FLAT-LAID BUNDLES WITH THE STYRENE DUNNAGE PROVIDED WITH THE SHIPMENT.
- BUNDLES CAN BE STACKED, NO MORE THAN (2) BUNDLES HIGH.
- SLOPE AT A MINIMUM OF **1:12** FOR DRAINAGE OF MOISTURE FROM PANELS.
- INSPECTED DAILY FOR MOISTURE, INSURE NO SAGS ARE PRESENT. TRAPPED MOISTURE CAN DAMAGE THE PANEL FINISH AND VOID APPLICABLE FINISH WARRANTIES. IF PANEL BUNDLES CONTAIN MOISTURE OR SAGS, THE PANEL BUNDLE SHOULD BE DRIED AND RESTACKED. USE CARE IN RESTACKING TO AVOID DAMAGE TO PANELS.

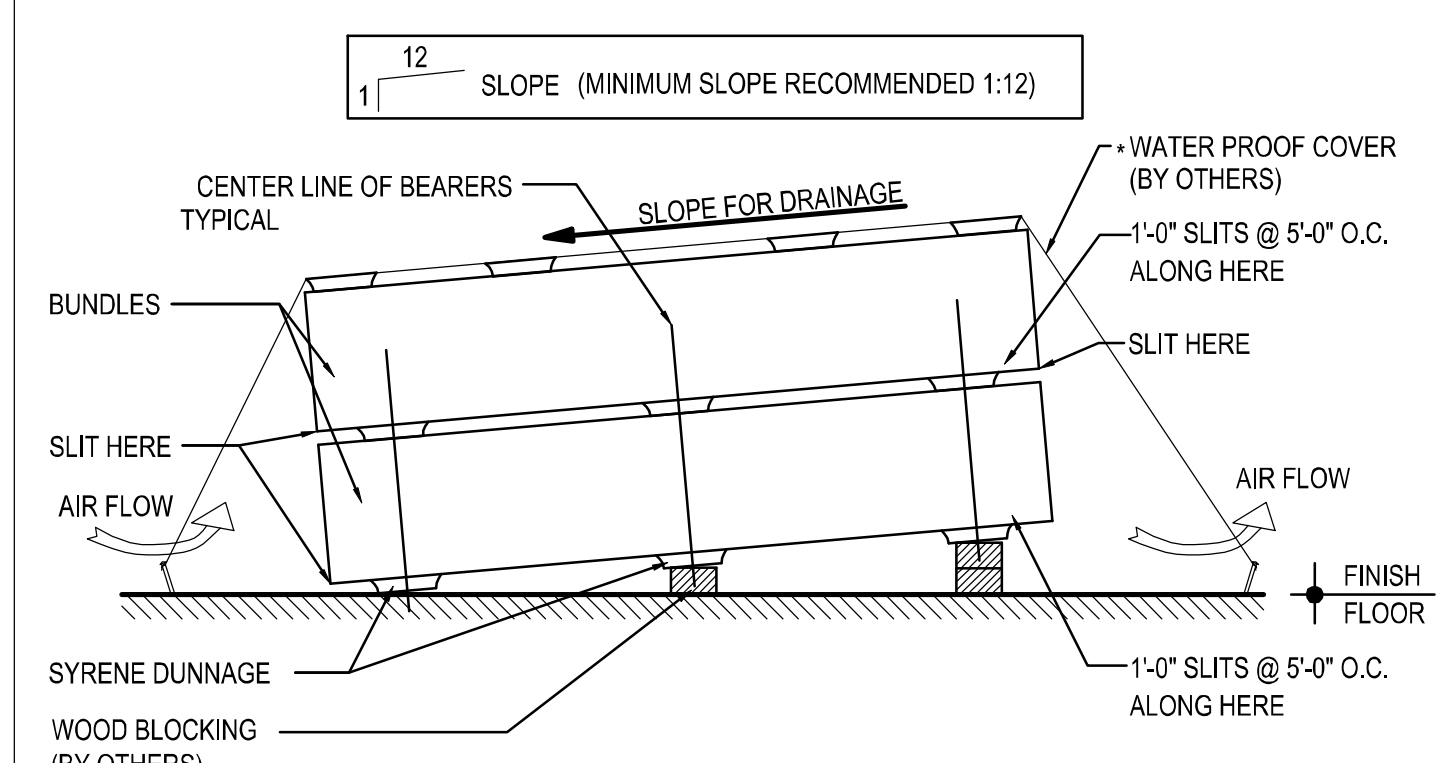

PANELS FOR IMMEDIATE USE:
IF THE PANELS ARE TO BE USED IMMEDIATELY, THE BUNDLES SHOULD BE PLACED AT PRE-PLANNED STRATEGIC LOCATIONS AROUND THE PERIMETER OF THE BUILDING, AS CLOSE AS POSSIBLE TO THE PLANNED WORK AREAS, TO AVOID UNDUE SITE MANEUVERING.

WHEN MOVING PANEL BUNDLES, EXTREME CAUTION SHOULD BE TAKEN TO PREVENT DAMAGE TO THE PANEL SURFACES AND EDGES.

WHEN HANDLING PANELS INDIVIDUALLY, THEY SHOULD BE CARRIED IN A VERTICAL, NOT FLAT POSITION. NEVER DRAG PANELS WHEN REMOVING THEM FROM BUNDLES.

(SEE "HANDLING PANELS AND COMPONENTS)

INSTALLATION TOOLS:

"READ BEFORE YOU START"

- SLIDING PANELS TOGETHER WILL SCUFF, DISCOLOR OR DAMAGE THE FINISH.
- IT IS IMPORTANT TO NOTE THAT, DUE TO THE HIDDEN FASTENER SIDE LAP CONNECTIONS OF THESE PANELS, EXTRA CARE SHOULD BE TAKEN WHEN HANDLING THESE COMPONENTS.
- THE FOLLOWING IS A LIST OF COMMON TOOL REQUIREMENTS. REFER TO "FIELD CUTTING" FOR PANEL CUTTING GUIDELINES.
- WEARING CLEAN GLOVES, HANDLING THE PANELS BY EDGES AND TAKING A LITTLE EXTRA CARE WILL PAY OFF BY PRODUCING A GOOD CLEAN FINISHED ROOF.

COMMON TOOL REQUIREMENTS:

CIRCULAR SAW	POWER DRILL	CARPENTER'S SQUARE
RIVET GUN	LEVEL	CHALK LINE
TAPE MEASURE	CAULK GUN	SCREW GUN
POWER SHEARS	HAMMER DRILL	POWER NIBBLER

CAUTION: ANY METAL FILINGS OR BURRS SHOULD BE CLEANED OFF THE FACE OF THE PANELS AS SOON AS POSSIBLE TO PREVENT RUST FROM FORMING ON THE PAINT. (SEE "CLEANING PROCEDURES")

ALIGNMENT & SHIMMING
PRIOR TO INSTALLATION, ROOF SECONDARY MEMBERS SHOULD BE CHECKED FOR OVERALL DIMENSIONS AND EVENNESS OF PLANE. THE ROOF SECONDARY MEMBERS SHOULD ALSO BE CHECKED TO VERIFY THE ROOF SYSTEM CAN BE INSTALLED WITHOUT INTERFERENCE. PRIOR TO INSTALLATION OF INSULATED PANEL, INSPECT ROOF FOR COMPONENT ALIGNMENT AND PLANE FLATNESS.

MISALIGNED SECONDARY STEEL MAY REQUIRE THE ERECTOR TO SHIM THE INSULATED ROOF PANELS AT SOME LOCATIONS. SHIMS AND LABOR FOR INSTALLING SHIMS ARE BY OTHERS.

FASTENERS:

INSULATED PANEL FASTENERS VARY BASED ON LOCATION AND PANEL THICKNESS. THE FASTENERS LISTED BELOW ARE TYPICAL FASTENERS. ADDITIONAL FASTENERS, WHEN REQUIRED BY DESIGN, WILL BE INDICATED ELSE WHERE ON THE ERECTION DRAWING SET.

43L — SELF-DRILLING SCREW 1/4-14 x 1 1/4" TYPE 2

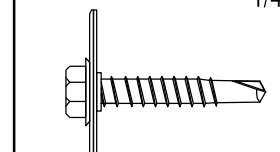

H1030 — SELF-DRILLING SCREW 1/4-14 x 1 1/4" TCP 3 W/ WASHER

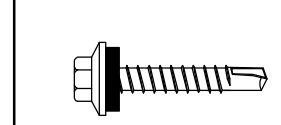

H1050 — SELF-DRILLING SCREW 1/4-14 x 7/8" TCP 1 W/ WASHER

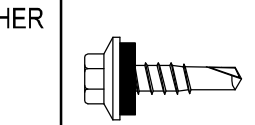

H1100 — 1/8" STAINLESS STEEL BLIND POP RIVET GRIP RANGE: 1/8" - 3/16"



17 — SELF-DRILLING SCREW 12-14 x 1" TCP 3 W/ WASHER

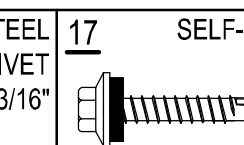

4 — SELF-DRILLING SCREW 1/4-14 x 7/8" TCP 1 W/ WASHER

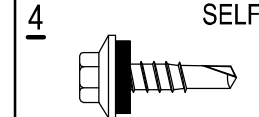

14 — 1/8" STAINLESS STEEL BLIND POP RIVET GRIP RANGE: 1/8" - 3/16"

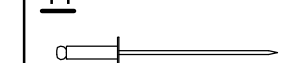

H1220 — SELF-DRILLING SCREW 12-14 x 1" TCP 3 SQUARE / PHILLIPS PANCAKE HEAD

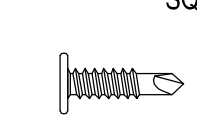

2605ANC — LOCK RIVET, 9/32 BT DOME HEAD W/ WASHER

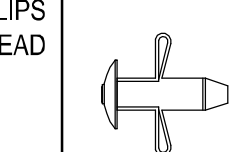

14A — 1/8" STAINLESS STEEL BLIND POP RIVET GRIP RANGE: 5/16" - 3/8"

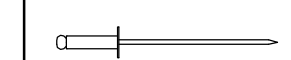

16__PNC / 17__PNC
#14 X _ SDHH (SELF DRILLING HEX HEAD)



STRUCTURAL FASTENING AT PANEL HIDDEN JOINT			
PANEL THICK.	HIDDEN FASTENER	(TEK 3) MARK#:	(TEK 5) MARK #:
2"	1/4 - 14 X 2 SDHH W/O WASHER	1616PNC	N/A
2 1/2" & 3"	1/4 - 14 X 3 SDHH W/O WASHER	1624PNC	1724PNC
4"	1/4 - 14 X 4 SDHH W/O WASHER	1632PNC	1732PNC

14__PNC
#14 X _ SDPH SELF DRILLING PANCAKE HEAD



STRUCTURAL FASTENER AT PANEL FACE		
PANEL THICK.	THROUGH FASTENER	(TEK 3) MARK#:
2"	#14 X 3 SDPH	1424PNC
2 1/2" & 3"	#14 X 4 SDPH	1432PNC
4"	#14 X 5 SDPH	1440PNC

11__P999
#14 X _ SDHH (SELF DRILLING HEX HEAD)



STRUCTURAL FASTENING FOR THROUGH CONDITIONS		
PANEL THICK.	THROUGH FASTENER	(TEK 3) MARK#:
2"	1/4 - 14 X 4 SDHH W/ WASHER	1132P999
2 1/2" & 3"	1/4 - 14 X 5 SDHH W/ WASHER	1140P999
4"	1/4 - 14 X 6 SDHH W/ WASHER	1148P999
5"	1/4 - 14 X 7 SDHH W/ WASHER	1156P999
6"	1/4 - 14 X 8 SDHH W/ WASHER	1164P999

41__GNC
METL-SPAN ROOF PANEL CLIP

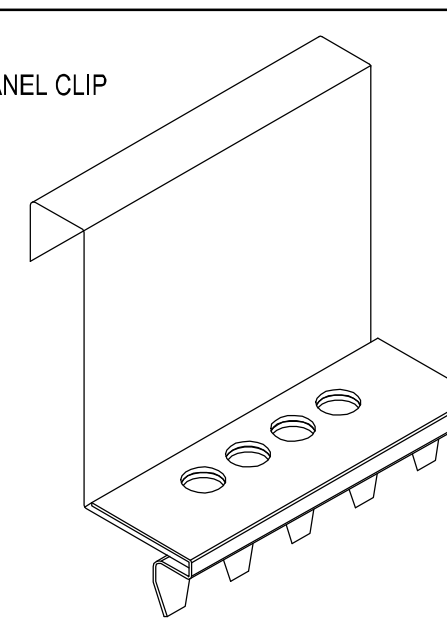

METL-SPAN ROOF PANEL CLIPS	
PANEL THICK.	METL-SPAN ROOF PANEL CLIP MK# 41__GNC
2"	4102GNC
2 1/2"	4125GNC
3"	4103GNC
4"	4104GNC
5"	4105GNC
6"	4106GNC

NOTES: THE USE OF A CENTER PUNCH TO SLIGHTLY DIMPLE THE PANEL FACE PRIOR TO INSTALLING THROUGH FASTENERS IS RECOMMENDED TO PREVENT "WALKING" OF THE FASTENERS. EXCESSIVE DAMAGE TO THE PANEL FINISH CAUSED DURING INSTALLATION MAY VOID THE PANEL FINISH WARRANTY.

PROJECT PREPERATION NOTES

INSULATED ROOF PANELS
INITIAL GUIDLINES, UNLOADING, HANDLING PANELS & COMPONENTS, JOBSITE STORAGE, & REQ'D TOOLING FOR INSTALLATION

TRIM_1

ISSUE	DWN	CHK	ENG	PE	DATE
CONST. AB PLAN	NBS	EOP	CBM		7/24/2023
BUILDING DEPARTMENT REVIEW	MBS	DAN	CBM		7/31/2023

NUCOR BUILDING SYSTEMS
305 INDUSTRIAL PARKWAY, WATERLOO, IN 46793
PHONE: (260) 837-7891 FAX: (260) 837-7384
PO BOX 1006, 200 WHETSTONE RD, SWANSEA, SC 29160
PHONE: (803) 568-2100 FAX: (803) 568-2121
600 APACHE TRAIL, TERRELL, TX 75160
PHONE: (972) 524-5407 FAX: (972) 524-5417
1050 WATERY LANE, BRIGHAM CITY, UT 84302
PHONE: (435) 919-3100 FAX: (435) 919-3101

PROJECT NAME
WENDOVER FS #13 REPLACEMENT
WENDOVER, NV

CUSTOMER NAME
MICHAEL CLAY CORP
WINNEMUCCA, NV

JOB NUMBER
U23G0555A

SHEET TITLE

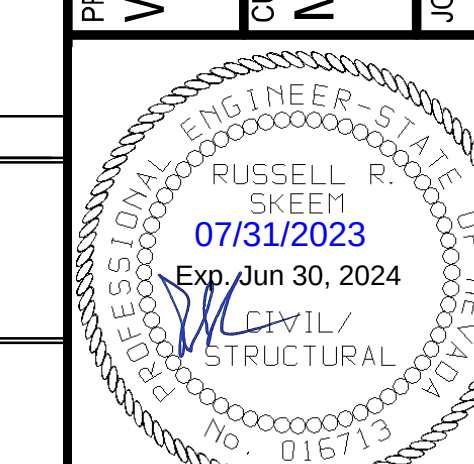

This seal pertains only to the materials designed and supplied by Nucor Building Systems, a division of Nucor Corporation. The drawings and the metal buildings which they represent are the product of Nucor Building Systems. The register professional engineer whose seal appears on these drawings is employed by Nucor Buildings Systems and does not serve as or represent the project engineer of record and shall not be construed as such.

PANEL JOINT SEQUENCE

1. SET PANEL IN PLACE
2. INSTALL PANEL CLIP ON TOP OF 6" OF 1/2" TAPE MASTIC MK. H3010
3. SECURE TO PURLINS W/ ROOF CLIP FASTENERS MK. 1616PNC

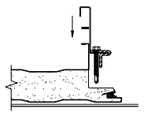

4. HAND "CRIMP" THE STANDING RIB / CLIP ASSEMBLY AT EACH CLIP LOCATION
5. INSTALL CONTINUOUS TAPE MASTIC MK. H3010 ON TOP OF MALE STANDING SEAM

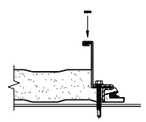

6. TILT NEXT PANEL TO BE INSTALLED AT 45 DEGREE ANGLE, ROTATE INTO POSITION

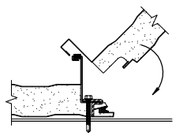

7. USE CLAMPS TO ENSURE PROPER PANEL ENGAGEMENT
8. HAND CRIMP AT RIDGE, ENDLAP AND EAVES
9. INSTALL RIDGE, RAKE AND EAVE COMPONENTS, THEN MECHANICALLY SEAM ROOF

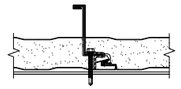

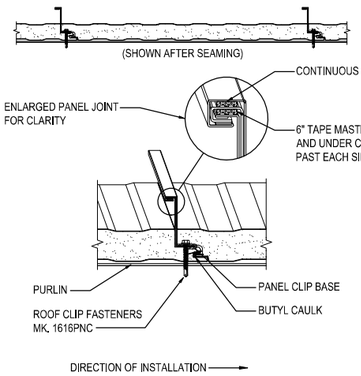

FINISHED PANEL JOINT

PANEL JOINT
INSULATED METAL PANEL ROOF INSTALLATION SEQUENCE

TRIM_2

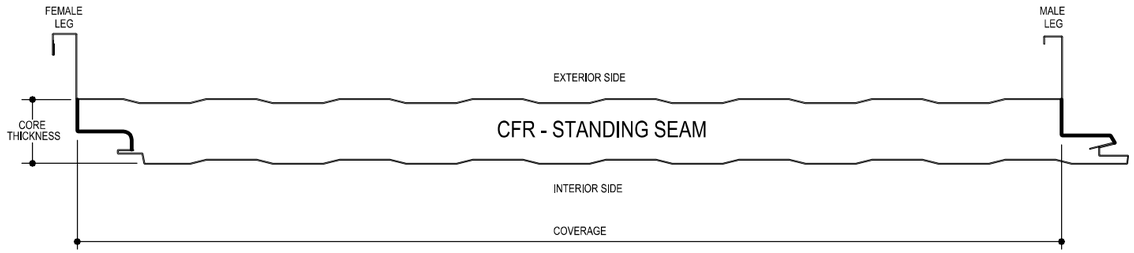

PANEL TYPE	CFR - STANDING SEAM
CORE MATERIAL	POLYURETHANE
CORE THICKNESS	4"
COVERAGE	42"

	EXTERIOR FACE	INTERIOR FACE
GAUGE	24	26
MATERIAL	G-90 GALV. or AZ50 STEEL	G-90 GALV. or AZ50 STEEL
FINISH	PVDF	POLYESTER
COLOR	TERRA COTTA	IGLOO WHITE
PATTERN	EMBOSSED	DEEP EMBOSSED

TRIM_3

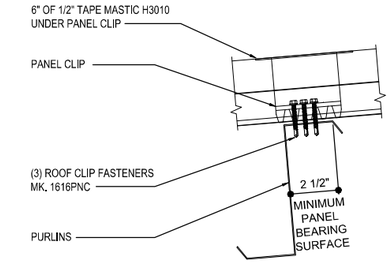

CLIP FASTENER QUANTITY
INSULATED METAL PANEL ROOF CLIP ATTACHMENT

TRIM_4

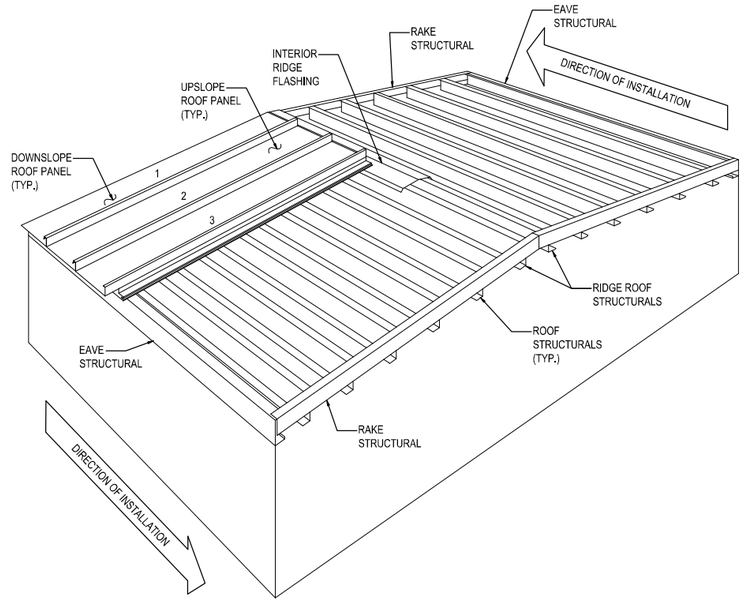

ROOF PANEL LAYOUT
ROOF PANEL LAYOUT WITH NO ENDLAP

TRIM_5

ISSUE	DWN	CHK	ENG	PE	DATE
CONST. AB PLAN	NBS	EOP	CBM		7/24/2023
BUILDING DEPARTMENT REVIEW	WBS	DAN	CBM		7/31/2023

NUCOR BUILDING SYSTEMS
300 INDUSTRIAL PARKWAY, WATERLOO, IN 46793
PHONE: (260) 837-7891 FAX: (260) 837-7384
PO BOX 1006, 200 WHETSTONE RD, SWANSEA, SC 29160
PHONE: (803) 568-2100 FAX: (803) 568-2121
600 APACHE TRAIL, TERRELL, TX 75160
PHONE: (972) 524-4700 FAX: (972) 524-4717
1050 WATER LANE, BRIGHAM CITY, UT 84302
PHONE: (435) 919-3100 FAX: (435) 919-3101

PROJECT NAME: WENDOVER FS #13 REPLACEMENT
WENDOVER, NV

CUSTOMER NAME: MICHAEL CLAY CORP
WINNEMUCCA, NV

JOB NUMBER: U23G0555A

SHEET TITLE

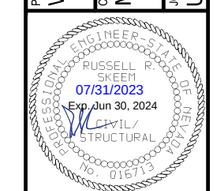

This set contains only to the materials described and shown and is owned by Nucor Building Systems, a division of Nucor Corporation. The drawings and the information shown thereon are not to be used for the benefit of Nucor Building Systems or a registered professional engineer employed by Nucor Building Systems and does not serve as a certification of any kind by anyone of record and shall not be construed as such.

SHEET: D6 of 20

GUTTER LAP & END CAP

APPLY BEAD OF POLYURETHANE CAULK 1" FROM END OF TRIM AND LAP SECTIONS 2" AND FASTEN AS SHOWN. TO TERMINATE THE GUTTER APPLY POLYURETHANE CAULK TO THREE SIDES OF END CAP AND TOP RETURN AREA AS SHOWN AND INSERT INTO THE GUTTER LEAVING 1/2" EXPOSED. ATTACH WITH RIVETS SAME AS END LAP.

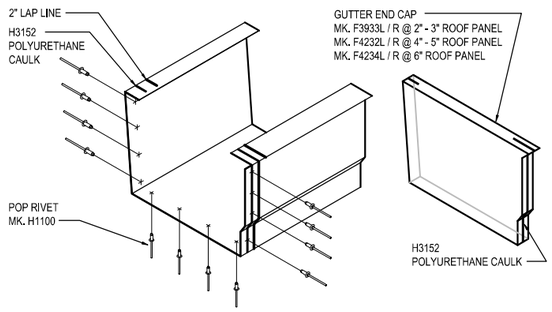

ERECTOR NOTE:
PART MARKS MAY CONTAIN A "- NUMBER" INDICATING ROOF SLOPE

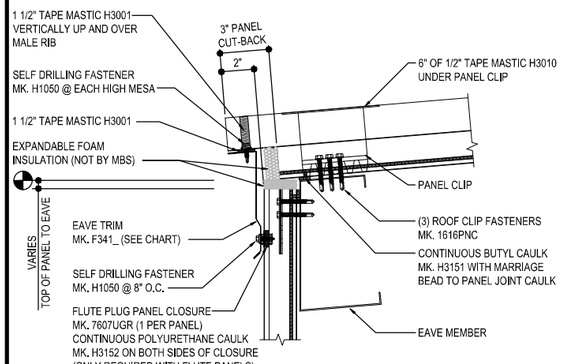

ROOF PANEL THICKNESS	EAVE TRIM
2" / 2.5" / 3"	F3415
4" / 5"	F3416
6"	F3417

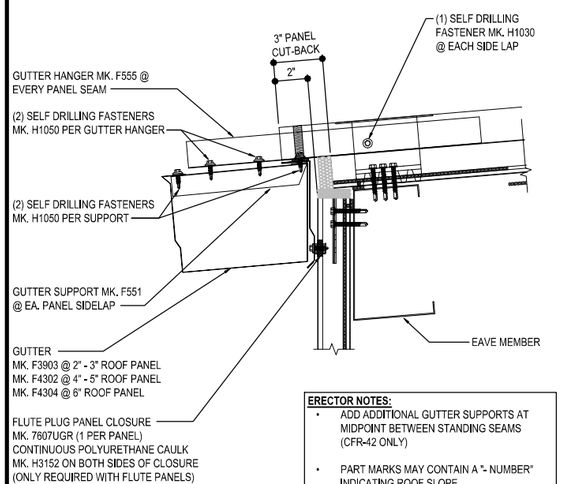

ERECTOR NOTES:
- ADD ADDITIONAL GUTTER SUPPORTS AT MIDPOINT BETWEEN STANDING SEAMS (CFR-42 ONLY)
- PART MARKS MAY CONTAIN A "- NUMBER" INDICATING ROOF SLOPE

EAVE GUTTER DETAIL

INSULATED METAL PANEL ROOF WITH GUTTER

TRIM_6

STEP 1

PREPARATION FOR RAKE TRIM INSTALLATION AT BUILDING WITH GUTTER

RAKE CLOSURE ATTACHMENT WITH GUTTER
ATTACH RAKE TRIM CLOSURE **F3444** AT A HIGH RIB OR LOW RIB FOR PROPER SEAL. EXTEND RAKE CLOSURE DOWNSLOPE FOR ATTACHMENT TO GUTTER.

WHEN BEGINNING GUTTER AND EAVE TRIM INSTALL LOCATE CORRECT POSITION OF **F341_** TRIM AND CLAMP / HOLD IN PLACE AND FASTEN TO WALL PANEL WITH FASTENER **MK. H1050.** DO NOT FASTEN TO ROOF PANEL AT THIS TIME.

FIELD COPE EAVE TRIM
EAVE TRIM **MK. F341_** HELD LEVEL TO FACE OF PANEL AND EXTENDED OUT PAST CORNER AND FIELD COPED AROUND CORNER ALLOWING FASTENING WITH **POP RIVETS MK. (H1100)** FIELD WORK REQURED FOR WEATHER TIGHTNESS.

GUTTER INSTALLATION WITH GUTTER CAP AND RAKE TRIM

MARK LOCATION OF RAKE CLOSURE **(F3444)** ON GUTTER FOR PLACEMENT OF GUTTER END CAP. THE GUTTER WILL EXTEND OUT TO BE FLUSH WITH WALL PANEL.

APPLY BEAD OF POLYURETHANE CAULK **(H3152)** TO THE GUTTER END CAP AND INSERT INTO THE END OF THE GUTTER. ENSURE THE GUTTER CAP IS IN-LINE WITH YOUR MARK FOR THE **F3444** RAKE CLOSURE AND FASTEN AS SHOWN.

FASTEN GUTTER ONTO LOW EAVE BY FOLLOW FASTENER QUANTITY AND LOCATION PER EAVE GUTTER DETAIL.

ERECTOR NOTE:
PART MARKS MAY CONTAIN A "- NUMBER" INDICATING ROOF SLOPE

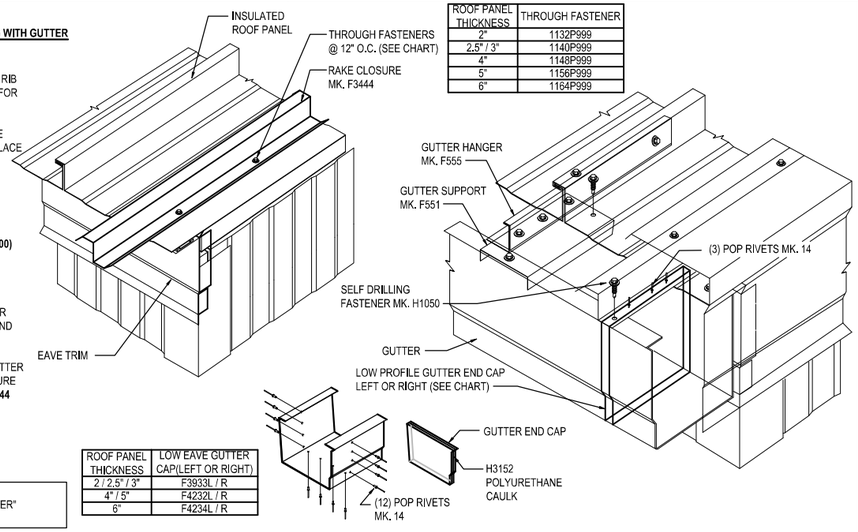

ROOF PANEL THICKNESS	THROUGH FASTENER
2"	1132P999
2.5" / 3"	1140P999
4"	1148P999
5"	1156P999
6"	1164P999

ROOF PANEL THICKNESS	LOW EAVE GUTTER CAP(LEFT OR RIGHT)
2 / 2.5" / 3"	F3933L / R
4" / 5"	F4232L / R
6"	F4234L / R

STEP 2

GUTTER CORNER CAP AND RAKE TRIM INSTALLATION

FASTEN THE RAKE TRIM TO THE ROOF PANEL AS INDICATED IN THE RAKE TRIM DETAIL.

FASTEN THE RAKE TRIM TO THE LOW EAVE CORNER ASSEMBLY USING POP RIVETS **MK. H1100** AS SHOWN.

COPE THE BOTTOM VERTICAL LEG OF THE RAKE TRIM FLUSH WITH THE OUTSIDE EDGE OF THE WALL CORNER TRIM.

ALWAYS START THE RAKE TRIM INSTALLATION AT THE LOW EAVE WORKING TOWARD THE HIGH EAVE OR RIDGE.

WALL PANEL THICKNESS	ROOF PANEL THICKNESS	RAKE TRIM
2" / 2.5" / 3"	2" / 2.5" / 3"	F3430
2" / 2.5" / 3"	4" / 5"	F3431
2" / 2.5" / 3"	6"	F3432
4"	2" / 2.5" / 3"	F3433
4"	4" / 5"	F3434
4"	6"	F3435

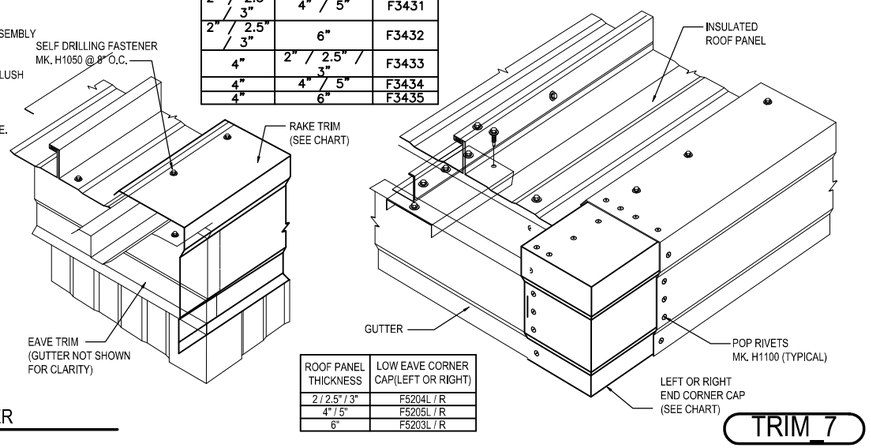

ROOF PANEL THICKNESS	LOW EAVE CORNER CAP(LEFT OR RIGHT)
2 / 2.5" / 3"	F5204L / R
4" / 5"	F5205L / R
6"	F5203L / R

SCULPTURED RAKE TO GUTTER

TRIM_7

RAKE LAP & FLASHING BACKER

SLIDE FIELD CUT SECTION FLASHING ENDLAP BACKER ONTO THE LOWER TRIM PIECE. PLACE TAPE MASTIC NEXT TO HEM OF THE BACKER (NOT ON TOP OF HEM). APPLY CONTINUOUS BEAD OF CAULK 1" FROM END OF TRIM DOWN PROFILE OF TRIM. FASTEN LAP WITH STITCH FASTENERS AND POP RIVETS AS SHOWN.

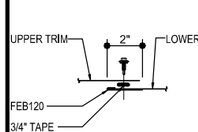

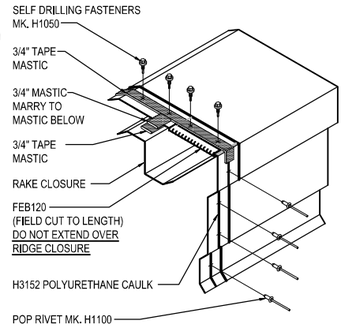

ROOF PANEL THICKNESS	THROUGH FASTENER
2"	1132P999
2.5" / 3"	1140P999
4"	1148P999
5"	1156P999
6"	1164P999

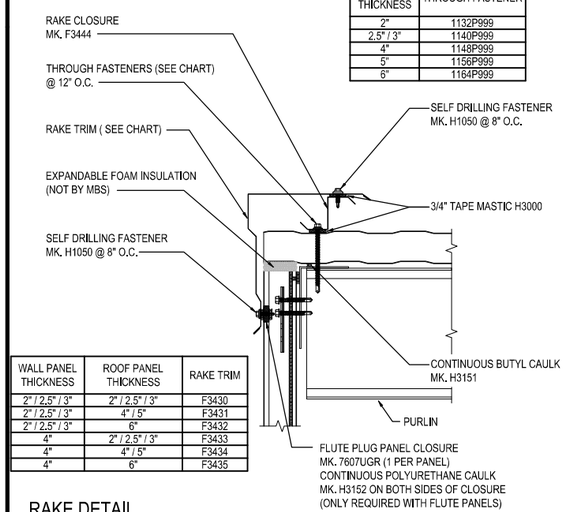

WALL PANEL THICKNESS	ROOF PANEL THICKNESS	RAKE TRIM
2" / 2.5" / 3"	2" / 2.5" / 3"	F3430
2" / 2.5" / 3"	4" / 5"	F3431
2" / 2.5" / 3"	6"	F3432
4"	2" / 2.5" / 3"	F3433
4"	4" / 5"	F3434
4"	6"	F3435

RAKE DETAIL

INSULATED METAL PANEL ROOF AT RAKE

TRIM_8

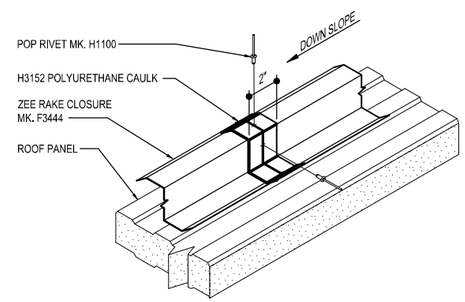

ZEE RAKE CLOSURE LAP DETAIL

TRIM_9

ISSUE	DWN	CHK	ENG	PE	DATE
CONST. AB PLAN	NBS	EOP	CBM		7/24/2023
BUILDING DEPARTMENT REVIEW	MBS	DAN	CBM		7/31/2023

NUCOR BUILDING SYSTEMS
300 INDUSTRIAL PARKWAY, WATERLOO, IN 46793
PHONE: (260) 837-7891 FAX: (260) 837-7384
PO BOX 1006, 200 WHETSTONE RD, SWANSEA, SC 29160
PHONE: (803) 568-2100 FAX: (803) 568-2121
600 APACHE TRAIL, TERRELL, TX 75160
PHONE: (469) 554-4400 FAX: (972) 554-4417
1050 WATER LANE, BRIGHAM CITY, UT 84302
PHONE: (435) 919-3100 FAX: (435) 919-3101

PROJECT NAME: WENDOVER FS #13 REPLACEMENT
WENDOVER, NV

CUSTOMER NAME: MICHAEL CLAY CORP
WINNEMUCCA, NV

JOB NUMBER: U23G0555A

SHEET TITLE

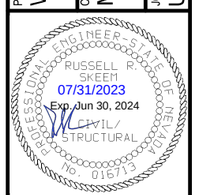

This set of plans and/or specifications is the property of Nucor Building Systems, a division of Nucor Corporation. The drawings and the information shown on the drawings are the property of Nucor Building Systems and are not to be used in any way detrimental to the interest of Nucor Building Systems unless expressed permission is granted by Nucor Buildings Systems and does not serve as a representation that the building is in accordance with the record and shall not be construed as such.

SHEET: D7 of 20

PRIOR TO INSTALLING THE INTERIOR RIDGE TRIM,
APPLY 3/8" BEAD OF BUTYL CAULK MK. H3151 ONTO RAKE ROOF ANGLE MK. MAR01

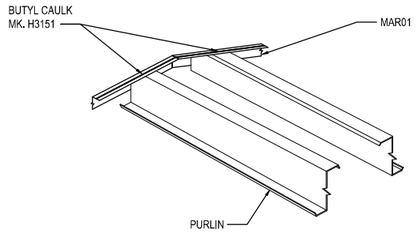

APPLY 3/8" CONTINUOUS BEAD OF BUTYL CAULK ALONG THE LENGTH OF THE INTERIOR RIDGE TRIM. MARRY TO THE BUTYL ALONG THE RAKE.

INSTALL INTERIOR RIDGE TRIM WITH POP RIVETS MK. 14 AS NEEDED INTO SECONDARY MEMBERS.

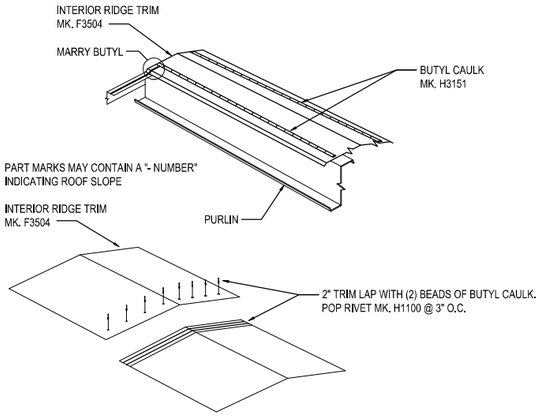

ONCE PANELS ARE INSTALLED, CRIMP PANEL SEAMS TO PREP FOR MASTIC AND RIDGE CLOSURE INSTALLATION.

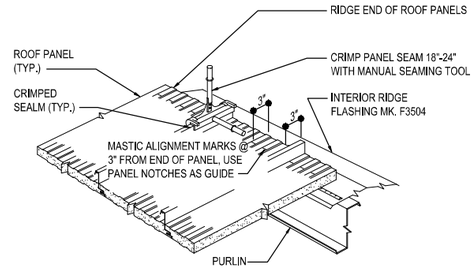

INSTALL MASTICS
ENSURE 1 1/2" MASTIC H3001 ENCOMPASSES THE ENTIRE PROFILE OF EACH VERTICAL RIB

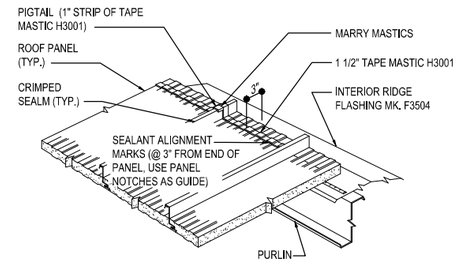

RIDGE CLOSURE INSTALLATION

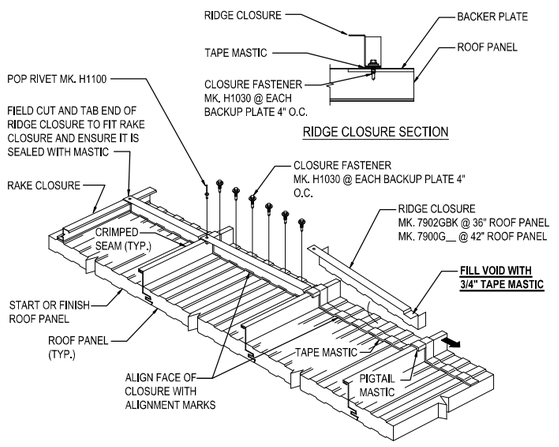

EXTERIOR RIDGE FLASHING INSTALLATION
INSTALL 3/4" TAPE MASTIC H3000 ON TOP LEG OF CLOSURE PRIOR TO EXTERIOR RIDGE FLASHING BEING INSTALLED

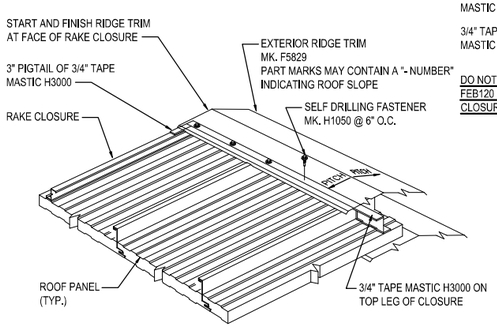

RIDGE CAP LAP & FLASHING BACKER

SLIDE FIELD CUT SECTION FLASHING ENDLAP BACKER ONTO THE LOWER TRIM PIECE. PLACE TAPE MASTIC NEXT TO HEM OF THE BACKER (NOT ON TOP OF HEM). MARRY LAP MASTIC WITH MASTIC BETWEEN RIDGE CAP AND PANEL CLOSURE.

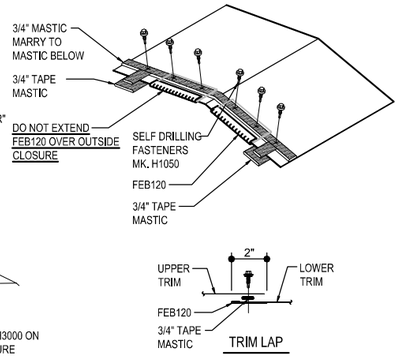

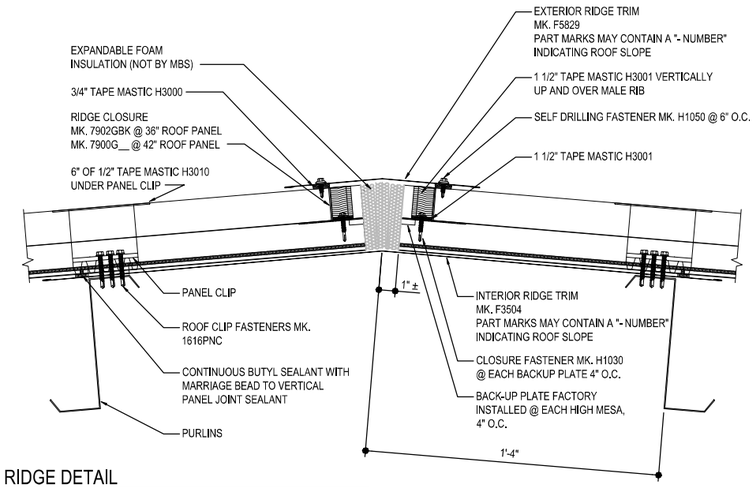

RIDGE DETAIL

INSULATED METAL PANEL ROOF AT RIDGE

TRIM_10

ISSUE	DWN	CHK	ENG	PE	DATE
CONST. AB PLAN	NBS	EOP	CBM		7/24/2023
BUILDING DEPARTMENT REVIEW	MBS	DAN	CBM		7/31/2023

NUCOR BUILDING SYSTEMS
300 INDUSTRIAL PARKWAY, WATERLOO, IN 46793
PHONE: (260) 837-7891 FAX: (260) 837-7384
PO BOX 1006, 200 WHETSTONE RD, SWANSEA, SC 29160
PHONE: (803) 568-2100 FAX: (803) 568-2121
600 APACHE TRAIL, TERRELL, TX 75160
PHONE: (972) 524-4417 FAX: (972) 524-4447
1050 WATER LANE, BRIGHAM CITY, UT 84302
PHONE: (435) 919-3100 FAX: (435) 919-3101

PROJECT NAME
WENDOVER FS #13 REPLACEMENT
WENDOVER, NV

CUSTOMER NAME
MICHAEL CLAY CORP
WINNEMUCCA, NV

JOB NUMBER
U23G0555A

SHEET TITLE

RUSSELL R. SKEEN
07/31/2023
Exp. Jun 30, 2024
CIVIL/STRUCTURAL

This sealed plans only to the materials shown herein and is furnished by Nucor Building Systems, a division of Nucor Corporation. The drawings and the material shown thereon are the property of Nucor Building Systems or register professional engineer whose seal appears on these drawings is employed by Nucor Buildings Systems and does not serve as a certified document if not signed and sealed of record and shall not be construed as such.

SHEET

D8 of 20

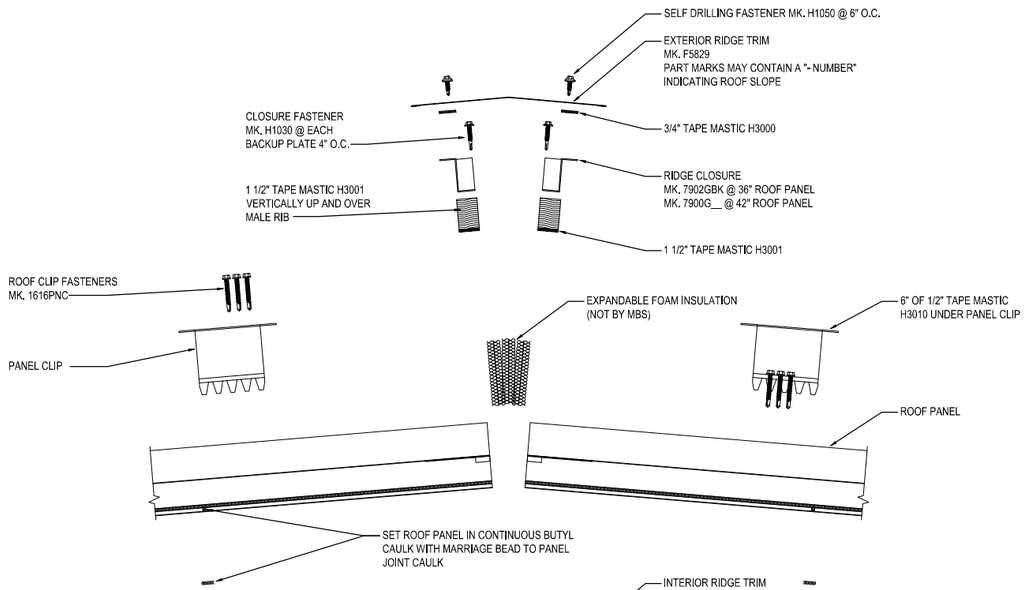

RIDGE DETAIL

EXPLODED INSULATED METAL PANEL ROOF AT RIDGE

TRIM_11

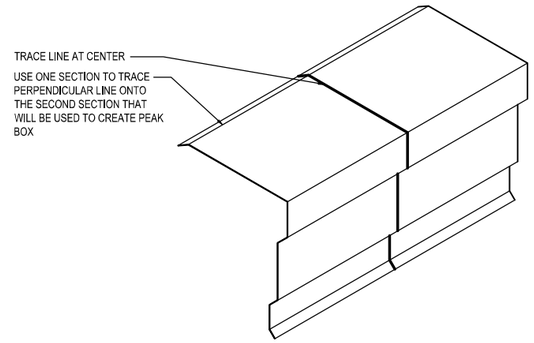

ROOF SLOPE	LAYOUT DIMENSION (INCHES			
	A	B	C	D
0.25:12	1/8"	1/4"	3/8"	11 7/8"
0.50:12	1/4"	1/2"	3/4"	11 5/8"
1:12	3/8"	1"	1 1/2"	11 3/8"
2:12	3/4"	2 1/8"	2 7/8"	10 5/8"
3:12	1 1/8"	3 1/8"	4 1/4"	9 7/8"
4:12	1 1/2"	4 1/8"	5 3/4"	9 1/4"
5:12	1 3/4"	5 1/8"	7 1/8"	8 1/2"
6:12	2 1/8"	6 1/8"	8 1/2"	7 3/4"

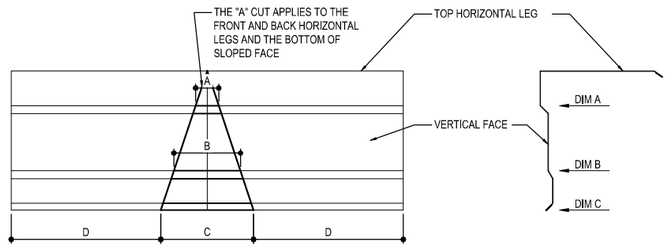

STEP BY STEP INSTRUCTIONS

1. CUT THE TRIM INTO (2) 2'-0" ± LENGTHS
2. LAYOUT THE WORK LINES AS SHOWN
3. OFFSET ONE OF THE WORK LINES FOR TABS LAYOUT
4. MAKE CUTS AS SHOWN
5. BEND AT THE TOP HORIZONTAL LEG OF THE TRIM
6. POP RIVET THE TWO SIDES TOGETHER WITH **MK. H1100**
7. CAULK ANY GAPS AS REQUIRED ON INSIDE WITH **H3152 POLYURETHANE TUBE CAULK**

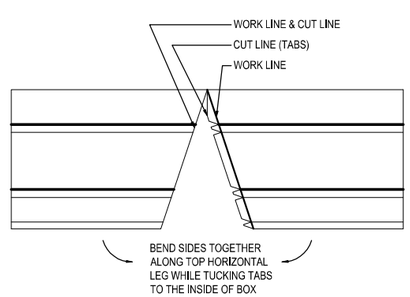

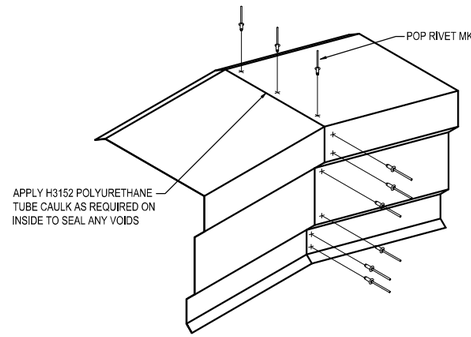

FIELD FABRICATED PEAK BOX INSTRUCTIONS

REFERENCE PEAK BOX DETAIL FOR INSTALLATION

TRIM_12

ISSUE	DWN	CHK	ENG	PE	DATE
CONST. AB PLAN	NBS	EOP	CBM		7/24/2023
BUILDING DEPARTMENT REVIEW	MBS	DAN	CBM		7/31/2023

NUCOR BUILDING SYSTEMS
300 INDUSTRIAL PARKWAY, WATERLOO, IN 46793
PHONE: (260) 837-7891 FAX: (260) 837-7384
PO BOX 1006, 200 WHETSTONE RD, SWANSEA, SC 29160
PHONE: (803) 568-2100 FAX: (803) 568-2121
600 APACHE TRAIL, TERRELL, TX 75160
PHONE: (972) 524-2700 FAX: (972) 524-2417
1050 WATERY LANE, BRIGHAM CITY, UT 84302
PHONE: (435) 919-3100 FAX: (435) 919-3101

PROJECT NAME
WENDOVER FS #13 REPLACEMENT
WENDOVER, NV

CUSTOMER NAME
MICHAEL CLAY CORP
WINNEMUCCA, NV

JOB NUMBER
U23G0555A

SHEET TITLE

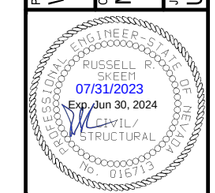

This sheet contains only to the materials described herein and is owned by Nucor Building Systems, a division of Nucor Corporation. The drawings and the information shown thereon are not to be used or reproduced in any manner except as the product of Nucor Building Systems or its registered professional engineer who has executed one of these drawings is employed by Nucor Buildings Systems and does not serve as a record and shall not be construed as such.

SHEET

D9 of 20

DESIGN AND PERFORMANCE CRITERIA

ROOF SYSTEM
THE ROOF SYSTEM CONSISTS OF 24 GAUGE PANELS WITH A NOMINAL COVERAGE OF 1'-4" AND A PANEL SEAM THAT IS 2 1/2" OR 3 1/2" HIGH DEPENDING ON CLIP TYPE USED. REFER TO THE DETAILS AND SECTIONS FOR SPECIFIC PANEL CLIP TYPE.

PANEL CLIP SPACING
THE ROOF SYSTEM USES A CLIP TO ATTACH THE PANELS TO THE ROOF SECONDARY MEMBERS. PANEL CLIP SPACING REQUIREMENTS AS A STANDARD ARE REQUIRED AT EVERY PURLIN AND/OR ROOF JOIST.

PANEL CLIP FASTENING REQUIREMENTS
STANDARD CLIP FASTENERS ARE DESIGNED TO FASTEN TO A STEEL STRUCTURAL MEMBER OF .060" MINIMUM THICKNESS (16 GA.). A MINIMUM OF TWO FASTENERS ARE REQUIRED TO ENGAGE THE STRUCTURAL MEMBER AT EVERY PANEL CLIP LOCATION. IN CERTAIN INSTANCES, THREE FASTENERS MAY BE REQUIRED PER CLIP REQUIRED. LOOK ON CHART AT RIGHT AND IN THE ERECTION DRAWINGS FOR YOUR SPECIFIC FASTENER REQUIREMENTS. FASTENER PULLOUT VALUES ARE DEPENDENT UPON PROJECT LOCATION, SIZE, BUILDING CODE AND LOADING.

ROOF TOP UNITS AND CURB SUPPORTS
THE ROOF SYSTEM IS ELEVATED ABOVE THE TOP OF THE ROOF SECONDARY STRUCTURAL MEMBERS. THE ROOF CURB SUB-FRAMING IS LEVEL WITH THE SECONDARY STRUCTURAL MEMBERS. REFER TO THE DETAILS FOR PROPER JAMB LOCATIONS AND DIMENSIONS.

THE ROOF SYSTEM IS DESIGNED AS A FLOATING SYSTEM. CURB FRAMING AND FLASHING MUST BE DESIGNED ACCORDINGLY TO ALLOW THE CURB SYSTEM TO FLOAT WITH THE ROOF DURING THERMAL EXPANSION AND CONTRACTION. ROOF CURBS SHALL NOT SPAN THE RIDGE OF A BUILDING.

INSULATION REQUIREMENTS
INSULATION IS RECOMMENDED TO BE USED IN ALL ROOF APPLICATIONS TO AVOID PROBLEMS WITH CONDENSATION FORMING ON THE UNDERSIDE OF THE SHEETING. THIS ALSO PROVIDES A BUFFER BETWEEN THE PURLINS AND THE ROOF TO ELIMINATE NOISE AND POSSIBLE DAMAGE DUE TO METAL-TO-METAL CONTACT. NOISE REDUCING FOAM TAPE CAN BE SUPPLIED FOR USE IN LIMITED APPLICATIONS (CANOPIES, ETC.) WHEN INCLUDED AS PART OF THE ROOF ORDER. REFER TO THE DETAILS FOR FOAM TAPE REQUIREMENTS.

PAINTED ROOF
PAINTED Loc Seam ROOF PANELS ARE OFTEN PROVIDED BY MBS. IN THIS CASE, GUTTER BRACKETS AND OUTSIDE CLOSURES WILL BE PAINTED TO MATCH THE ROOF COLOR AS A STANDARD.

MASTIC APPLICATION

TEMPERATURE EXTREMES
TEMPERATURE EXTREMES MUST BE CONSIDERED DURING INSTALLATION OF THE ROOF DUE TO THE SENSITIVITY OF MASTICS. THE RECOMMENDED INSTALLATION TEMPERATURE RANGE IS 20-120 DEGREES FAHRENHEIT. AT COLDER TEMPERATURES, THE MASTIC STIFFENS RESULTING IN LOSS OF ADHESION AND COMPRESSIBILITY. AT HOTTER TEMPERATURES, THE MASTIC BECOMES TOO SOFT FOR PRACTICAL HANDLING. ON COLD BUT SUNNY DAYS, THE PANEL SURFACE MAY BECOME WARM ENOUGH TO ACCEPT THE APPLICATION OF HEATED MASTIC EVEN THOUGH THE AIR TEMPERATURE IS BELOW 20 DEGREES FAHRENHEIT.

WHEN OVERNIGHT TEMPERATURES FALL BELOW FREEZING, THE MASTIC SHOULD BE STORED IN A HEATED ROOM SO IT WILL BE WARM ENOUGH TO USE THE FOLLOWING DAY. ON HOT DAYS, THE MASTIC CARTONS SHOULD BE STORED OFF THE ROOF IN A COOL AND SHADED AREA. WHILE ON THE ROOF, MASTIC ROLLS SHOULD BE KEPT SHADED UNTIL ACTUAL USE.

IN VERY COLD WEATHER, IT IS RECOMMENDED THAT THE FASTENERS BE TIGHTENED SLOWLY AND ONLY TIGHT ENOUGH THAT THE MASTIC IS IN FULL CONTACT WITH THE PANEL OR FLASHING. THEN ON THE NEXT SUNNY DAY, COMPLETE THE TIGHTENING PROCESS AFTER THE SUN WARMS THE PANEL AND FLASHING SURFACES.

CONTAMINATION
TO ASSURE PROPER ADHESION AND SEALING, THE MASTIC MUST HAVE COMPLETE CONTACT WITH ADJOINING SURFACES. CONTAMINANTS SUCH AS WATER OIL, DIRT AND DUST PREVENT SUCH CONTACT. THE PANEL AND FLASHING SURFACES MUST BE DRY AND THOROUGHLY CLEANED OF ALL CONTAMINANTS. BEFORE APPLYING TAPE MASTIC, THE MASTIC SHOULD BE CHECKED FOR CONTAMINANTS. IF THE MASTIC SURFACES ARE CONTAMINATED, IT MUST NOT BE USED.

DURING COOL WEATHER, CONDENSATION OR LIGHT MIST CAN ACCUMULATE ON THE PANEL AND FLASHING SURFACE AND NOT BE EASILY NOTICED. IT IS RECOMMENDED THAT THE MASTICS ALWAYS BE KEPT UNDER PROTECTIVE COVER AND THAT THE PANEL AND FLASHING SURFACES BE WIPED DRY IMMEDIATELY BEFORE INSTALLATION.

TAPE MASTIC IS PROVIDED WITH A PROTECTIVE PAPER TO REDUCE CONTAMINATION. INCOMPLETE REMOVAL OF THE PROTECTIVE PAPER WILL PREVENT THE MASTIC ADHESION TO THE PANEL OR FLASHING SURFACES. ALWAYS CHECK THAT THE PROTECTIVE PAPER IS COMPLETELY REMOVED. DO NOT REMOVE THE PROTECTIVE PAPER UNTIL IMMEDIATELY BEFORE THE PANEL OR FLASHING IS INSTALLED OVER THE MASTIC.

COMPRESSION
TO ASSURE PROPER COMPRESSION AND SEAL, THE TAPE MASTIC MUST BE COMPRESSED BETWEEN THE PANEL AND FLASHING SURFACES WITH FIRM AND UNIFORM PRESSURE. IN MOST CASES, THE REQUIRED PRESSURE IS APPLIED BY THE CLAMPING ACTION OF SCREWS PULLING THE ADJOINING SURFACES TOGETHER. HOWEVER, THE TAPE SEALANT'S RESISTANCE TO PRESSURE BECOMES GREATER IN COLD WEATHER.

DURING COLD WEATHER, THE FASTENERS MUST BE TIGHTENED SLOWLY TO ALLOW THE MASTIC TIME TO COMPRESS. IF THE FASTENERS ARE TIGHTENED TOO FAST, THE FASTENERS MAY STRIP OUT BEFORE THE MASTIC COMPRESSES ADEQUATELY, OR THE PANEL OR FLASHING MAY DEFORM IN THE IMMEDIATE AREA OF THE FASTENER, LEAVING THE REST OF THE MASTIC INSUFFICIENTLY COMPRESSED.

INSIDE CORNERS
AN INSIDE RADIUS, SUCH AS WHERE THE PANEL FLAT MEETS A RIB, IS USUALLY THE MOST CRITICAL AREA TO SEAL. A COMMON MISTAKE FOR THE INSTALLER IS TO BRIDGE THE MASTIC ACROSS THE INSIDE RADIUS.

WHEN THE LAPPING PANEL OR FLASHING IS PUSHED INTO PLACE, THE BRIDGED MASTIC IS STRETCHED AND THINNED. THE MASTIC MAY THEN BE TOO THIN TO ADEQUATELY SEAL THIS CRITICAL AREA. WHEN TAPE MASTIC IS APPLIED AT AN INSIDE RADIUS, IT IS RECOMMENDED THAT THE MASTIC BE FOLDED BACK, THEN PUSH THE MASTIC FOLD INTO THE RADIUS.

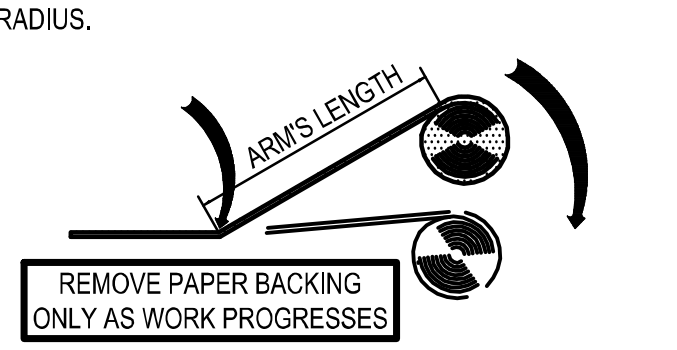

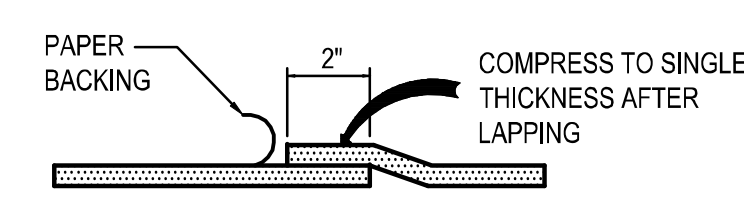

MASTIC LAP

ERECTORS RESPONSIBILITY

REGULATIONS
REGULATIONS SET FORTH BY THE OCCUPATIONAL SAFETY AND HEALTH ACT, LOCAL, STATE, AND/OR FEDERAL AGENCIES SHOULD BE ADHERED TO AT ALL TIMES. MBS IS NOT RESPONSIBLE FOR INJURY, DAMAGE, OR FAILURE, WHICH MAY BE THE RESULT FROM FAILING TO MEET ANY OF THESE REGULATIONS.

IN COMPLIANCE WITH THE HAZARD COMMUNICATION RULE 1910:1200, MATERIAL SAFETY DATA SHEETS (MSDS) HAVE BEEN PROVIDED FOR YOUR USE AND SAFETY. THESE DATA SHEETS SHOULD BE MADE AVAILABLE TO ALL PERSONNEL THAT COME IN CONTACT WITH THESE PRODUCTS. THESE DATA SHEETS WILL GIVE YOU THE NECESSARY INFORMATION TO PROPERLY HANDLE SUCH MATERIALS AND WHAT TO DO IN CASE OF AN EMERGENCY. (THE MSDS SHEETS ARE LOCATED ONLINE AND ARE AVAILABLE UPON REQUEST).

THE ERECTOR OF THE ROOF SYSTEM IS RESPONSIBLE FOR THE SAFE EXECUTION OF THIS DETAIL. THESE INSTRUCTIONS ARE INTENDED TO DESCRIBE THE SEQUENCE AND PROPER PLACEMENT OF PARTS. THEY ARE NOT INTENDED TO PRESCRIBE COMPREHENSIVE SAFETY PROCEDURES. THE PROCEDURES IN THIS DETAIL ARE BELIEVED TO BE RELIABLE. HOWEVER, MBS SHALL NOT BE RESPONSIBLE FOR INJURY, DAMAGE, OR FAILURE DUE TO THE MISAPPLICATION OF THESE PROCEDURES, IMPROPER ERECTION TECHNIQUES, OR NEGLIGENCE

WALKING AND WORKING ON ROOF PANELS
DO NOT PLACE BUNDLES OF PANELS ON THE ROOF STRUCTURE WITHOUT FIRST VERIFYING THE STRUCTURE WILL SAFELY SUPPORT THE CONCENTRATED WEIGHT OF THE PANELS AND THE WEIGHT OF THE INSTALLATION CREW. SOME ROOF STRUCTURES MAY NOT BE DESIGNED TO SUPPORT THE WEIGHT OF A FULL PANEL BUNDLE WITHOUT ADDITIONAL STRUCTURE SUPPORT.

DO NOT USE A ROOF PANEL AS A WORKING PLATFORM. AN UNSECURED PANEL COULD COLLAPSE UNDER THE WEIGHT OF A PERSON STANDING BETWEEN PURLINS OR AT THE PANEL END.

DO NOT WALK ON THE LAST INSTALLED PANEL RUN, AS THE UNSECURED EDGE COULD COLLAPSE UNDER A PERSON'S WEIGHT. WHEN INSTALLING CLIPS OR MAKING END LAP CONNECTIONS, ETC., STAND WHERE THE ROOF STRUCTURAL WILL SUPPORT YOUR WEIGHT.

AN APPROVED AND SAFE WALKING PLATFORM SHOULD BE USED IN HIGH TRAFFIC AREAS TO PREVENT THE ROOF PANEL FROM BEING DEFORMED, SCRATCHED, OR SCUFFED.

SAFETY EQUIPMENT
THE USE OF SAFETY EQUIPMENT FOR THE ROOF PANEL INSTALLATION IS RECOMMENDED AT ALL TIMES DURING THE INSTALLATION PROCESS. HOWEVER, WHEN USING LANYARDS, ENSURE THAT THE CLASP, BELT HOOKS AND WIRE CABLES ARE COVERED IN SUCH A MANNER THAT THEY WILL NOT SCRATCH THE PANEL SURFACE IF ACCIDENTALLY DRAGGED ALONG THE PANEL.

CREW SIZE
THE LENGTH OF THE INDIVIDUAL ROOF PANELS SHOULD BE CONSIDERED WHEN DETERMINING CREW SIZE. IT IS RECOMMENDED THAT UNDER NORMAL CONDITIONS, THERE BE ONE PERSON FOR EVERY TEN FEET OF PANEL LENGTH, PLUS ONE.

PANEL OVERHANG
DO NOT STAND ON THE END OF UNSUPPORTED (CANTILEVERED) PANELS AT THE EAVE OR RIDGE. STANDING ON THE CANTILEVER PORTION MAY RESULT IN PANEL COLLAPSE.

POINT LOADS
WHEN PROPERLY SUPPORTED BY THE STRUCTURAL STEEL, PANELS ARE DESIGNED TO SUPPORT UNIFORM LOADS, WHICH ARE EVENLY DISTRIBUTED OVER THE PANEL SURFACES. POINT LOADS THAT OCCUR IN SMALL OR CONCENTRATED AREAS, SUCH AS HEAVY EQUIPMENT, LADDER, OR PLATFORM FEET, ETC., MAY CAUSE PANEL DEFORMATION OR EVEN PANEL COLLAPSE.

SLICK SURFACES
PANEL SURFACES AND STRUCTURAL STEEL SURFACES ARE HARD, SMOOTH, AND NONABSORBENT, WHICH CAUSES THESE SURFACES TO BE VERY SLICK WHEN WET OR COVERED WITH SNOW OR ICE. EVEN BLOWING SAND OR HEAVY DUST CAN MAKE THESE SURFACES DIFFICULT TO WALK ON WITHOUT SLIPPING.

UNPAINTED PANEL SURFACES ARE OFTEN COATED WITH OIL TO ACCOMMODATE THE PANEL-FABRICATION PROCESS. ALTHOUGH DESIGNED TO WASH AWAY OR EVAPORATE DURING NORMAL WEATHER, THE OIL ON NEW PANELS CAN BE EXTREMELY SLICK, ESPECIALLY DURING PERIODS OF LIGHT RAIN AND DEW.
CAUTION MUST BE EXERCISED TO PREVENT SLIPPING AND FALLING ONTO THE ROOF SURFACE OR EVEN SLIDING OFF THE ROOF. NON-SLIP FOOTWEAR IS A NECESSITY AND NON-SLIP WORKING PLATFORMS ARE RECOMMENDED.

ELECTRICAL CONDUCTANCE
METAL PANELS ARE EXCELLENT ELECTRICAL CONDUCTORS. A COMMON CAUSE OF INJURY IS THE CONTACT OF METAL PANELS WITH POWER LINES DURING HANDLING AND INSTALLATION. THE LOCATION OF ALL POWER LINES MUST BE NOTED AND, IF POSSIBLE, FLAGGED. THE INSTALLATION PROCESS MUST BE ROUTED TO AVOID ACCIDENTAL CONTACT WITH ALL POWER LINES AND HIGH VOLTAGE SERVICES AND EQUIPMENT. ALL TOOLS AND POWER CORDS MUST BE PROPERLY INSULATED AND GROUNDED AND THE USE OF APPROVED GROUND FAULT CIRCUIT BREAKERS IS RECOMMENDED.

FALSE SECURITY OF INSULATION
BLANKET AND RIGID BOARD INSULATION BLOCK THE INSTALLER'S VIEW OF THE GROUND BELOW THE ROOF. SERIOUS INJURY CAN OCCUR WHEN THE INSTALLER GETS A FALSE SENSE OF SECURITY BECAUSE HE CANNOT SEE THE GROUND AND STEPS THROUGH THE INSULATION.

SHARP EDGES
SOME EDGES OR PANELS AND FLASHING ARE RAZOR SHARP AND CAN CAUSE SEVERE CUTS IF PROPER PROTECTIVE HAND GEAR IS NOT WORN. BE CAREFUL NOT TO INJURE OTHERS WHILE MOVING PANELS AND FLASHING.

COORDINATION WITH OTHER TRADES
SUPPORTS FOR THE ROOF SYSTEM SHALL BE PROVIDED AND ARE REQUIRED AS SHOWN IN THE SECTIONS AND AS NOTED IN THESE SPECIFICATIONS. ALL NECESSARY CLEARANCE DIMENSIONS FOR PROPER ELEVATIONS RELATIVE TO THE ROOF PANELS HAVE BEEN SHOWN. THE ERECTOR SHALL BE RESPONSIBLE FOR COORDINATING THESE DIMENSIONAL REQUIREMENTS WITH OTHER TRADES ASSOCIATED WITH THE BUILDING ROOF SYSTEM.

ERECTION CARE
THE ERECTOR MUST BE SKILLED IN THE ERECTION OF METAL BUILDING SYSTEMS AND IS RESPONSIBLE FOR COMPLYING WITH ALL APPLICABLE LOCAL, FEDERAL AND STATE CONSTRUCTION AND SAFETY REGULATIONS INCLUDING OSHA REGULATIONS AS WELL AS ANY APPLICABLE REQUIREMENTS OF LOCAL, NATIONAL OR INTERNATIONAL UNION RULES OR PRACTICES. THE ERECTOR REMAINS SOLELY RESPONSIBLE FOR THE SAFETY AND APPROPRIATENESS OF ALL TECHNIQUES AND METHODS UTILIZED BY ITS CREWS IN THE ERECTION OF THE METAL BUILDING SYSTEM AND/OR THE ROOF SYSTEM. THE ERECTOR IS ALSO RESPONSIBLE FOR SUPPLYING ANY SAFETY DEVICES SUCH AS SCAFFOLDS, RUNWAYS, NETS, ETC. WHICH MAY BE REQUIRED TO SAFELY ERECT THE METAL BUILDING SYSTEM AND/OR ROOF SYSTEM.

THE ERECTOR OF THE ROOF SYSTEM SHALL EXERCISE GREAT CARE AND ATTENTION TO THE DETAILS AS SHOWN ON THESE DRAWINGS TO INSURE A SECURE AND PROPER FIT OF ALL COMPONENTS. MBS SHALL NOT BE RESPONSIBLE FOR SUPERVISING AND/OR COORDINATING THE ERECTION OF THE ROOF SYSTEM WITH OTHER TRADES.

DUE CONSIDERATION MUST BE GIVEN BY THE ERECTOR TO THE EFFECTS OF THERMAL EXPANSION AND CONTRACTION WHEN ERECTING A ROOF TIE-IN TO AN EXISTING STRUCTURE TO INSURE A SAFE, SECURE, WEATHER TIGHT CONDITION. FLASHING FOR TIE-INS TO EXISTING BUILDINGS IS TYPICALLY NOT INCLUDED AS PART OF THE MATERIAL PROVIDED BY MBS. REFER TO THE SECTIONS/DETAILS FOR SPECIFIC MATERIALS PROVIDED BY MBS.

THERMAL BLOCKS

PURPOSE
THERMAL BLOCKS ARE USED IN BOTH INSULATED AND UN-INSULATED CONDITIONS. THEY PROVIDE IMPROVED THERMAL PERFORMANCE WERE INSULATION HAS BEEN COMPRESSED AT THE SECONDARY MEMBERS UNDER THE PANEL. THEY ALSO PROVIDE SUPPORT TO THE PANEL AND REDUCE PANEL FLUTTERING AND RUMBLE IN UN-INSULATED CONDITIONS. UN-INSULATED CONDITIONS UTILIZE THERMAL BLOCKS OR FOAM SPACERS THAT HAVE ADHESIVE TO ADHERE TO THE SECONDARY MEMBER TO PREVENT THEM FROM FALLING OUT OF PLACE.

LOCATIONS
THERMAL BLOCKS OR FOAM SPACERS ARE TO BE USED OVER ANY SECONDARY MEMBER WITH THE EXCEPTION OF THE EAVE MEMBER WHERE THE EAVE PLATE IS LOCATED.

INSULATED ROOF

INSULATION		BLOCK		
R_	THICK	MK #	THICK	CLIP
R7	2"	N/A	N/A	SHORT
R10	3 3/8"	N/A	N/A	SHORT
R11	3 3/4"	N/A	N/A	SHORT
R13	4 3/8"	N/A	N/A	SHORT
R13	4 3/8"	H4400	13/16"	TALL
R16	5 1/4"	H4400	13/16"	TALL
R19	6 3/8"	H4400	13/16"	TALL
R25	8"	H4400	13/16"	TALL

UN-INSULATED ROOF

BLOCK		
MK #	THICK	CLIP
H3310	1/2"	SHORT
H3305	1 1/2"	TALL
FIELD CUT H3305 TO LENGTH FOR PROPER FITTING BETWEEN PANEL CLIPS		

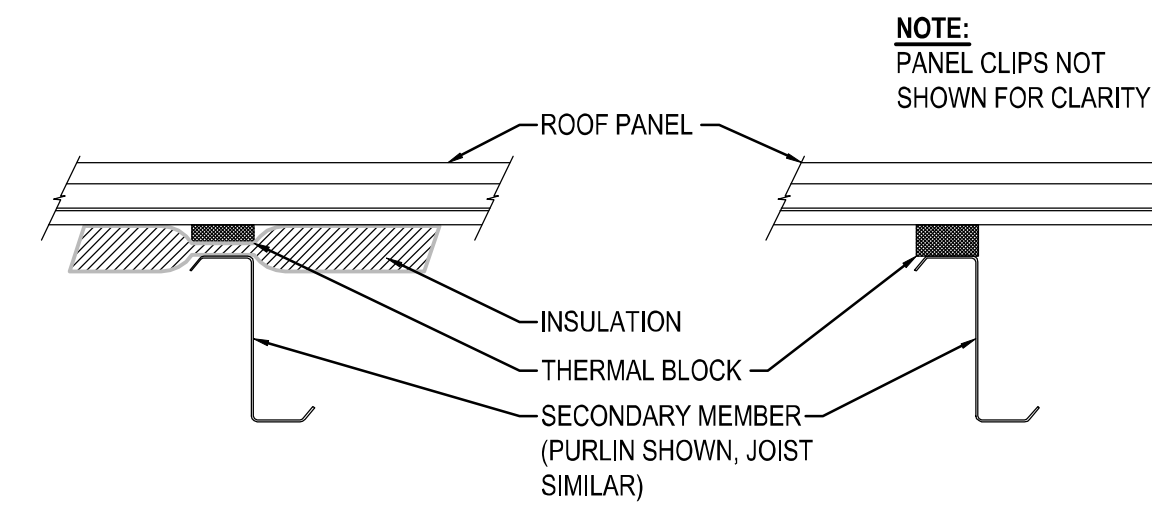

ROOF SYSTEM COMPONENT WITH DETAILING

DEFINITION
COMPONENTS WITH DETAILING DEFINITION IS A CASE WHERE MBS IS PROVIDING THE ROOF SYSTEM TO BE USED IN CONJUNCTION WITH ANOTHER STRUCTURE. MBS REFERS TO THAT AS A "COMPONENTS WITH DETAILING." THIS SIMPLY MEANS THAT MBS SHALL CALCULATE THE QUANTITIES AND LENGTHS FOR THE MATERIAL REQUIRED. MBS IS PERFORMING NO ENGINEERING STUDY OF THE EXISTING STRUCTURE. THE ENGINEER OF RECORD ON THE PROJECT SHALL BE RESPONSIBLE FOR COORDINATING THE ROOF SYSTEM WITH THE OTHER TRADES OF THE PROJECT TO INSURE A SAFE, QUALITY AND PROPER APPLICATION OF THE ROOF SYSTEM.

DIAPHRAGM
THE ROOF IS DESIGNED TO ACCOMMODATE THERMAL EXPANSION AND CONTRACTION AND WILL NOT ACT AS A DIAPHRAGM FOR RESISTING LATERAL LOAD FORCES OR PROVIDING LATERAL STABILITY TO THE ROOF STRUCTURAL MEMBERS. DUE CONSIDERATION FOR THIS MUST BE ADDRESSED BY THE PROJECT ENGINEER OF RECORD. IN ADDITION, THE ROOF SYSTEM, BECAUSE IT IS DESIGNED TO FLOAT, WILL NOT SUPPORT STRUCTURAL MEMBERS LATERALLY. WHEN REPLACING AN EXISTING SCREW DOWN ROOF, ADDITIONAL BRACING MAY BE REQUIRED TO LATERALLY SUPPORT THE MEMBERS. ENGINEERING AND MATERIAL FOR THESE USES SHALL NOT BE PROVIDED BY MBS.

BUILDING & PANEL PREPARATION

STEP 1: PLUMB AND SQUARE
THE FIRST STEP IN THE SUCCESSFUL INSTALLATION OF WALL PANELS IS TO HAVE THE PRIMARY FRAMING PLUMB AND SQUARE. FOR BEST RESULTS, IT IS RECOMMENDED THAT A TRANSIT BE USED WHEN ERECTING THE STRUCTURAL STEEL. MAKE SURE THAT THE FOUNDATION AND BUILDING STRUCTURE IS SQUARE, LEVEL, AND CORRECT TO THE OUT-TO-OUT STEEL LINE DIMENSIONS.
SEE FIGURE "A"

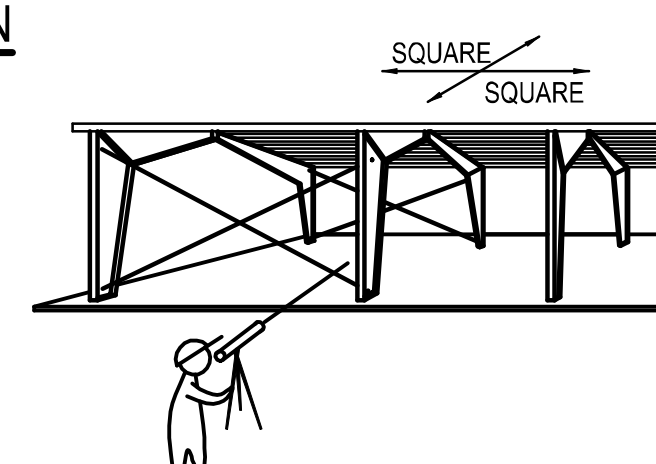

FIGURE "A"

FIELD CUTTING PANELS

WHEN FIELD CUTTING OR MITERING WALL PANELS, NON-ABRASIVE CUTTING TOOLS SUCH AS NIBBLERS OR TIN-SNIPS SHALL BE USED. ABRASIVE CUTTING TOOLS SUCH AS MECHANICAL GRINDERS OR POWER SAWS CAN DAMAGE THE MATERIAL FINISH AND CREATE EXCESS METAL SHAVINGS THAT CAN CORRODE THE PANELS. THE USE OF NON-APPROVED CUTTING DEVICES MAY VOID THE FACTORY WARRANTY.

ANY METAL SHAVINGS THAT ARE CREATED NEED TO BE CLEANED FROM THE PANEL TO PREVENT SCRATCHING AND/OR CORROSION. THE MANUFACTURER WILL NOT ACCEPT CLAIMS FOR DAMAGE/DETERIORATION DUE TO USE OF UNAPPROVED TOOLS.

SPECIAL CONDITION AT A STRONG-BACK EAVE BEAM

IF THIS PROJECT HAS AN EAVE BEAM WITH (2) PURLINS, AS SHOWN, DO NOT ATTACH ROOF CLIPS TO THE "SECOND" PURLIN.

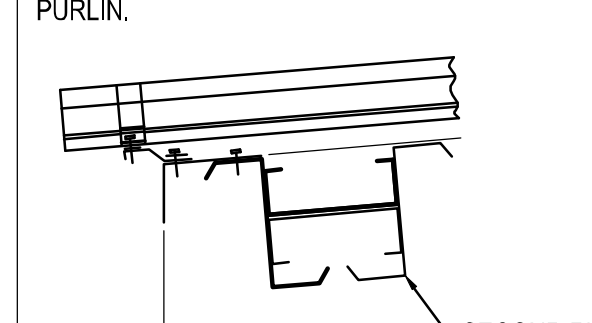

EAVE BEAM AT LOW EAVE

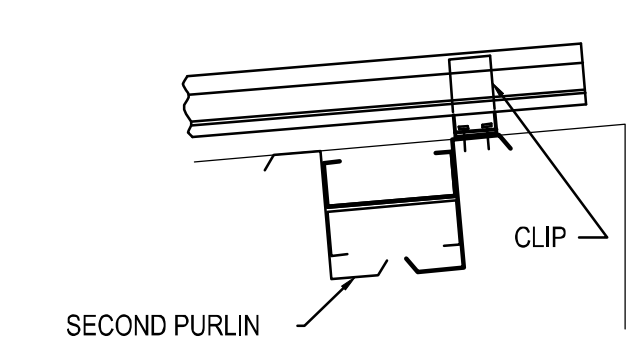

EAVE BEAM AT HIGH EAVE

FASTENER INSTALLATION

RECOMMENDED TOOL TYPES: SEE ALSO FASTENER SCHEDULE
4 AMP OR HIGHER RATED TOOLS (DO NOT USE IMPACTING TOOLS)
2000 - 2500 RPM SCREW GUN WITH TORQUE ADJUSTABLE CLUTCH
MANUAL OR ELECTRIC RIVET TOOL

DO NOT USE IMPACTING TOOLS
TO ASSURE PROPER VOLTAGE TO THE TOOL, EXTENSION CORDS SHOULD BE CHECKED FOR PROPER WIRE SIZE/CHORD LENGTH.
16 GAGE WIRE, MAXIMUM CHORD LENGTH = 100'
14 GAGE WIRE, MAXIMUM CHORD LENGTH = 200'
12 GAGE WIRE, MAXIMUM CHORD LENGTH = 300'

DRIVING TIPS:
SET THE NUT DRIVER AS DESCRIBED BELOW PRIOR TO INSTALLING FASTENERS TO PREVENT FASTENER WOBBLE...

SOCKET EXTENSIONS (4" OR 6") ARE RECOMMENDED TO BE USED FOR INSTALLING PANEL CLIP FASTENERS TO MAINTAIN VERTICAL FASTENER INSTALLATION.

EXCESSIVE PRESSURE CAN CAUSE DRILL POINT FAILURE. LET THE FASTENER DO THE WORK.

DO NOT OVER TIGHTEN FASTENERS AS THIS WILL LEAD TO PANEL DIMPLING AND DISTORTION.

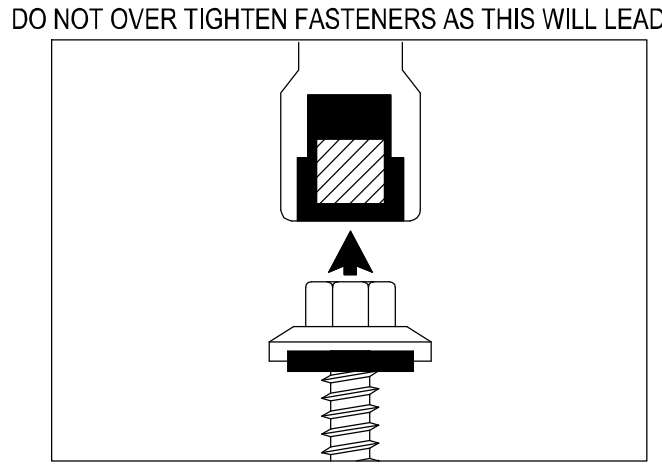

1. PUT THE TOP OF THE FASTENER INTO THE NUT DRIVER. NOTE: FOR PAINTED FASTENERS, PLACE A SINGLE OR DOUBLED LAYER OF PLASTIC BETWEEN THE FASTENER HEAD AND THE NUT DRIVER.

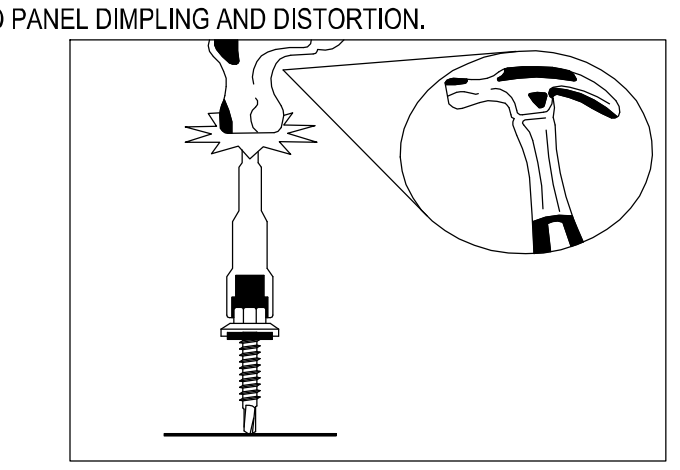

2. PLACE THE POINT OF THE FASTENER ONTO A HARD SURFACE AND FIRMLY HIT THE TOP OF THE NUT DRIVER 2-3 TIMES.

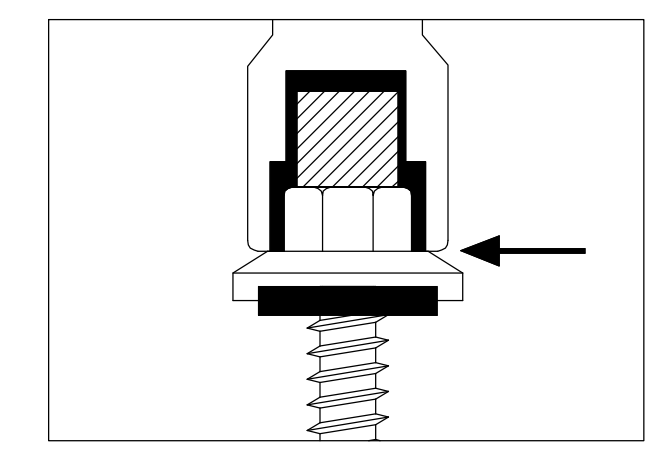

3. THE BASE OF THE NUT DRIVER SHOULD NOW BE CONTACTING THE TOP OF THE HEAD OF THE FASTENER WITH NO GAPS.

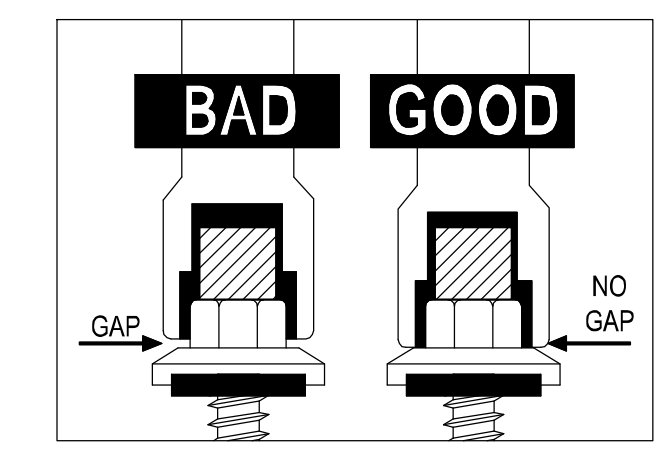

4. BAD SET VS. GOOD SET.

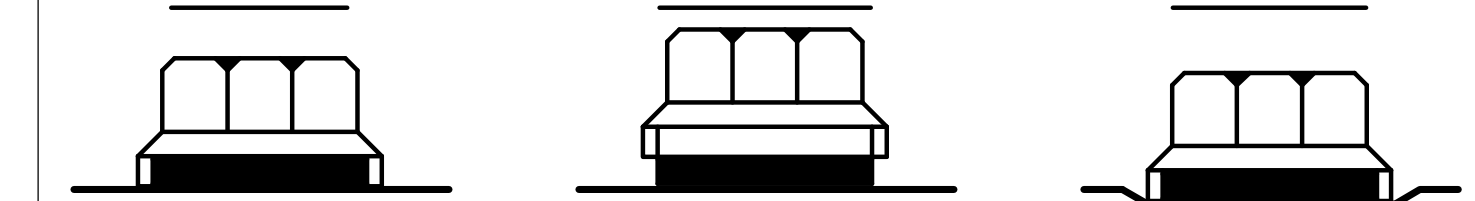

SEALING MATERIAL COMPRESSED UNDER CAP OF FASTENER. | SEALING MATERIAL VISIBLE UNDER CAP OF FASTENER. | SEALING MATERIAL COMPRESSED BUT DIMPLED THE PANEL / TRIM.

STRIP A FASTENER?

IF YOU STRIP H1030 OR H1050 REPLACE IT WITH H1000

IF YOU STRIP H1000 IN ENDLAP YOU MUST REBUILD THE ENDLAP

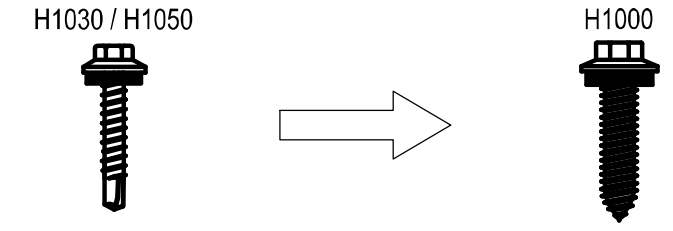

ROOF SHEETING DIRECTION

1.) THE ROOF SHEETING PLAN IS SHOWN WITH THE ROOF PANELS BEING ERECTED FROM "LEFT-TO-RIGHT". IF THE DESIRE IS TO ERECT THE ROOF PANELS FROM "LEFT-TO-RIGHT", FOLLOW THE ROOF SHEETING PLAN AS SHOWN. IF THE DESIRE IS TO ERECT THE ROOF PANELS FROM "RIGHT-TO-LEFT", FOLLOW THE INSTRUCTIONS SHOWN BELOW.

2.) WHEN SETTING BUNDLES OF PANELS ON THE ROOF, THE "MALE RIB" MUST ALWAYS BE AWAY FROM THE END OF THE BUILDING WHERE THE SHEETING WILL BEGIN.

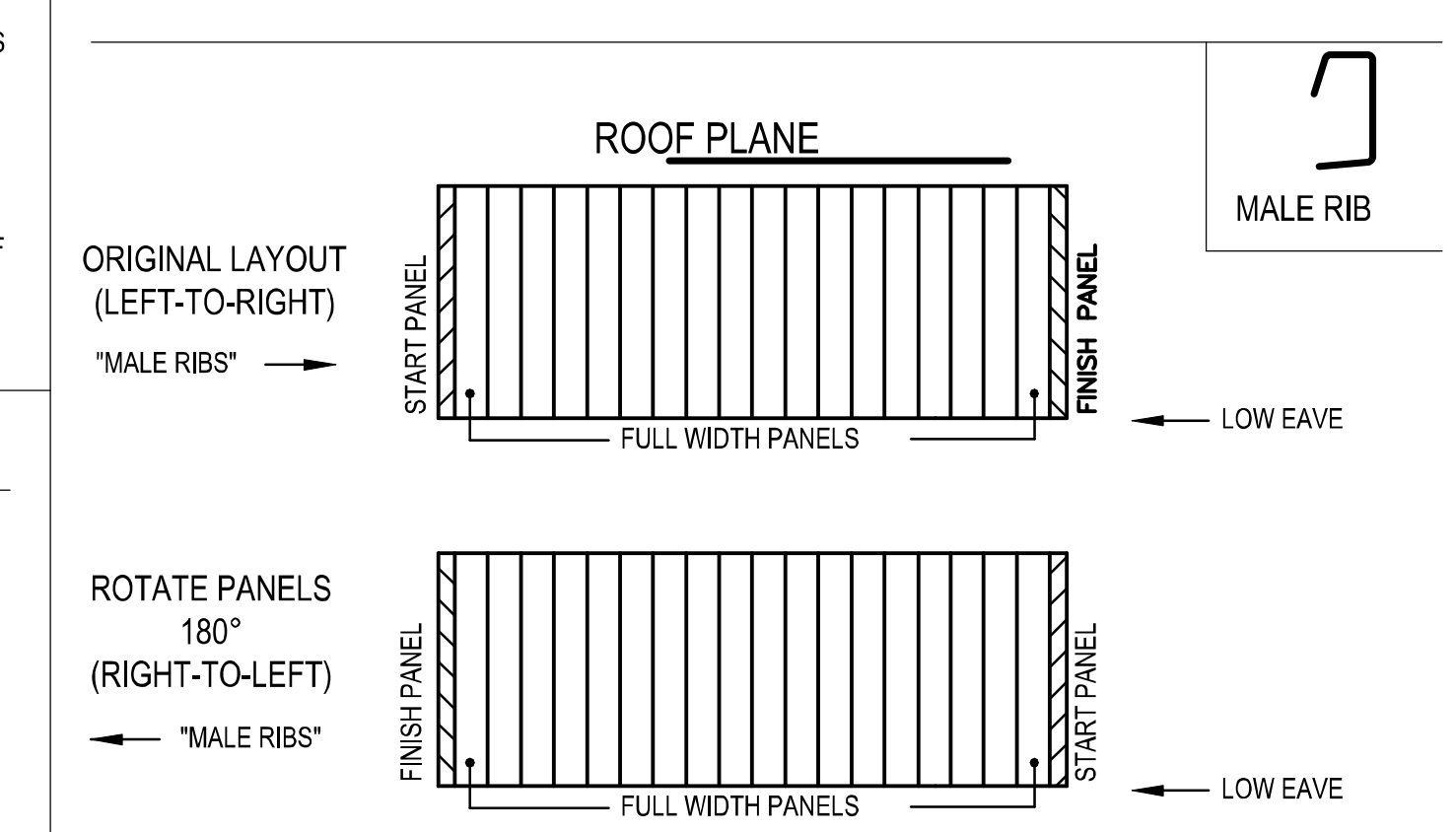

Loc Seam NOTES

EAVE GUTTER DETAIL w/ WALL PANELS
SEE WALL SHEETING ERECTION NOTES FOR WALL PANEL FASTENER LOCATIONS

TRIM_13

ISSUE	DWN	CHK	ENG	PE	DATE
CONST. AB PLAN	NBS	EOP	CBM		7/24/2023
BUILDING DEPARTMENT REVIEW	MBS	DAN	CBM		7/31/2023



305 INDUSTRIAL PARKWAY, WATERLOO, IN 46793
PHONE: (260) 837-7891 FAX: (260) 837-7384
PO BOX 1006, 200 WHETSTONE RD, SWANSEA, SC 29160
PHONE: (803) 568-2100 FAX: (803) 568-2121
600 APACHE TRAIL, TERRELL, TX 75160
PHONE: (972) 524-5407 FAX: (972) 524-5417
1050 WATERY LANE, BRIGHAM CITY, UT 84302
PHONE: (435) 919-3100 FAX: (435) 919-3101

PROJECT NAME
WENDOVER FS #13 REPLACEMENT
WENDOVER, NV

CUSTOMER NAME
MICHAEL CLAY CORP
WINNEMUCCA, NV

JOB NUMBER
U23G0555A

SHEET TITLE

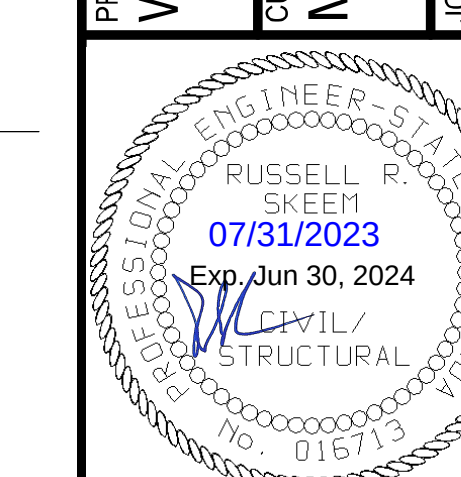

This seal pertains only to the materials designed and supplied by Nucor Building Systems, a divisions of Nucor Corporation. The drawings and the metal buildings which they represent are the product of Nucor Building Systems. The register professional engineer whose seal appears on these drawings is employed by Nucor Buildings Systems and does not serve as or represent the project engineer of record and shall not be construed as such.

SHEET
D10 of 20

BASIC INSTALLATION SEQUENCE

THE FOLLOWING STEPS OUTLINE THE BASIC INSTALLATION OF THE ROOF SYSTEM. REFERENCE THE SPECIFIC DETAILS WITHIN THIS ERECTION DRAWING SET FOR CONDITIONS SPECIFIC TO THIS PROJECT.

START PANEL PREPARATION
THE ROOF SYSTEM IS DESIGNED TO BE ELEVATED AND FLOAT ABOVE THE ROOF SUPPORT MEMBERS. BEGIN AT THE LOWER RAKE CORNER BY INSTALLING THE EAVE PLATE. (REFERENCE EAVE PLATE INSTALLATION BELOW)

AFTER EAVE PLATE HAS BEEN INSTALLED, STITCH THE FIRST ROLL OF ROOF INSULATION FROM RIDGE / HIGH EAVE TO LOW EAVE.

INSTALL THE RAKE CLIPS AND RAKE ANGLE TO SUPPORT / SECURE THE START PANEL. (REFERENCE RAKE ANGLE / RAKE CLIP PREPARATION TO THE RIGHT)

FIELD CUT AND INSTALL START PANEL
THE START PANEL IS SUPPLIED AS A FULL SHEET AND WILL NEED TO BE CUT. REFER TO THE ROOF SHEETING PLAN FOR START / FINISH DIMENSIONS AND RAKE DETAILS TO DETERMINE PROPER PANEL CUT. INSTALL THE START PANEL (LOW EAVE PANEL FIRST IF PANEL RUN IS LONG ENOUGH TO REQUIRE ENDLAPS) BY SECURING THE PANEL TO THE EAVE PLATE AND RAKE ANGLE. (REFERENCE LOW EAVE AND RAKE DETAILS). INSTALL PANEL CLIPS ON LEADING EDGE OF PANEL AS SHOWN IN THE PANEL CLIP DETAIL. CONTINUE TO INSTALL UPSLOPE START PANEL IF ENDLAPS ARE REQUIRED. REFERENCE THE BACKUP PLATE DETAIL AND ENDLAP DETAIL FOR ATTACHMENT OF START PANEL(S) AT RAKE ANGLE.

INTERMEDIATE PANEL & MODULARITY
THE INTERMEDIATE PANELS (FULL PANELS) SHOULD BE INSTALLED BY ROLLING THE PANEL INTO PLACE ENSURING THE SEAM IS FULLY ENGAGED. SECURE THE PANELS WITH PANEL CLIPS AND THE LOW EAVE ACROSS THE ROOF. IT IS RECOMMENDED TO INSTALL THE OUTSIDE CLOSURE AT THE HIGH EAVE / RIDGE AS THE ROOF PROGRESSES. THIS WILL HELP MAINTAIN MODULARITY. (REFERENCE HIGH EAVE / RIDGE DETAILS)

FINISH PANEL
THE FINISH PANEL IS SIMILAR TO THE START PANEL INSTALLATION. THE RAKE ANGLE CLIPS AND RAKE ANGLE NEEDS TO BE INSTALLED ON TOP OF THE INSULATION PRIOR TO INSTALLING THE FINISH PANEL. THE FINISH PANEL SHOULD BE FIELD CUT AND ROLLED INTO PLACE AND SECURED TO THE RAKE ANGLE SIMILAR TO THE START PANEL.

TRIM INSTALLATION
TRIM INSTALLATION CAN BE DONE AFTER THE ROOF PANELS ALL HAVE BEEN INSTALLED OR CAN BE INSTALLED AS ENOUGH PANELS HAVE BEEN INSTALLED FOR ATTACHMENT OF TRIMS. (REFERENCE TRIM DETAILS)

EAVE PLATE INSTALLATION

PLACE TAPE MASTIC ON TOP OF EAVE MEMBER PRIOR TO INSTALLING EAVE PLATE. INSTALL EAVE PLATE BY FASTENING EVERY HOLE TO EAVE MEMBER (6" O.C.) PRIOR TO INSULATION BEING INSTALLED. SECURE INSULATION WITH FASTENER & INSULATION RETAINER WASHER. NOTE: IF NO ROOF INSULATION IS USED SECURE EAVE PLATE IN EVERY HOLE (6" O.C.)

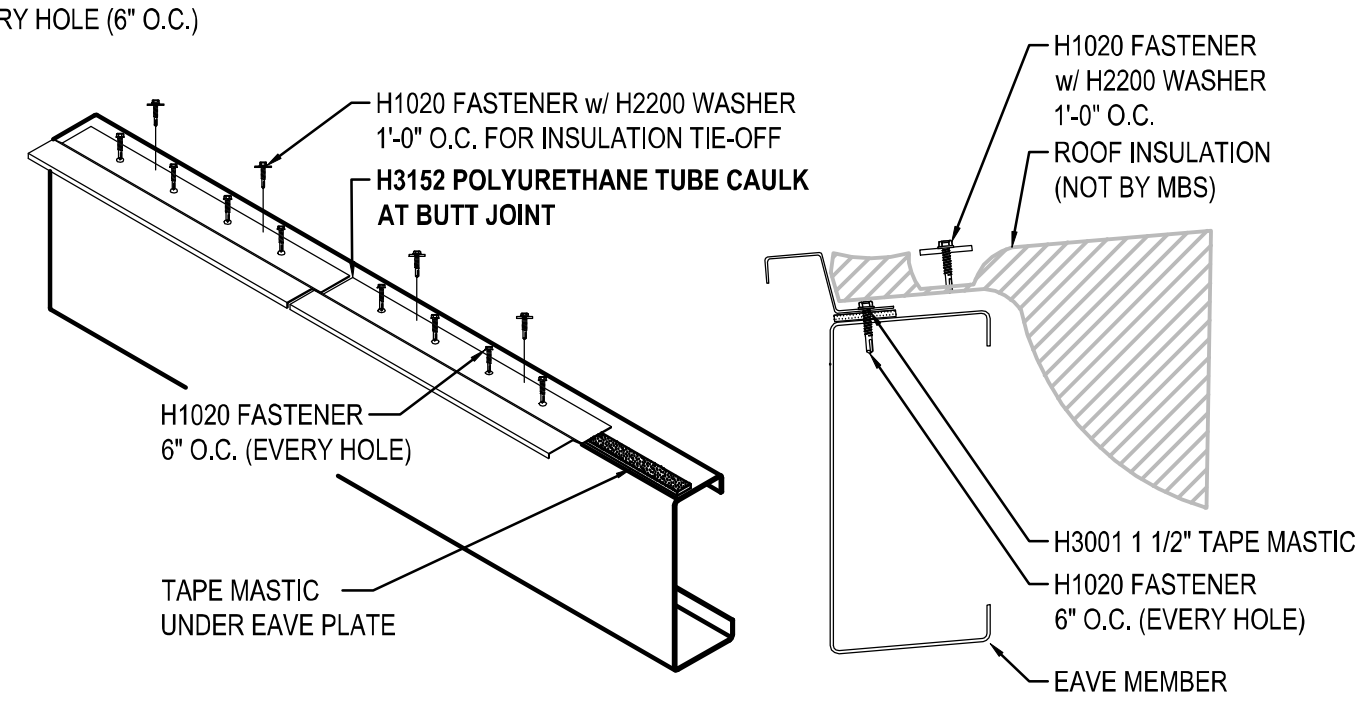

NOTE: H1020/H1070 (PURLIN/JOIST) FASTENER w/ H2200 WASHER
1'-0" O.C. FOR INSULATION TIE-OFF PROVIDED AT HIGH SIDE / RIDGE

SHORT EAVE PLATE		TALL EAVE PLATE	
EPS108	BASIC EAVE / GUTTER	EPT108	BASIC EAVE / GUTTER

PANEL CLIP INSTALLATION

BEFORE INSTALLING THE PANEL CLIP, FEEL FOR THE SUPPORT MEMBER BELOW THE INSULATION. ALIGN CLIP CENTERED OVER THE SUPPORT MEMBER AND ROLL CLIP OVER THE MALE HOOK OF THE PANEL. FASTEN CLIP WITH FASTENERS AS SPECIFIED IN THE DETAILS BASED ON THE SUPPORT MEMBER AND INSULATION UTILIZED FOR THE ROOF SYSTEM.

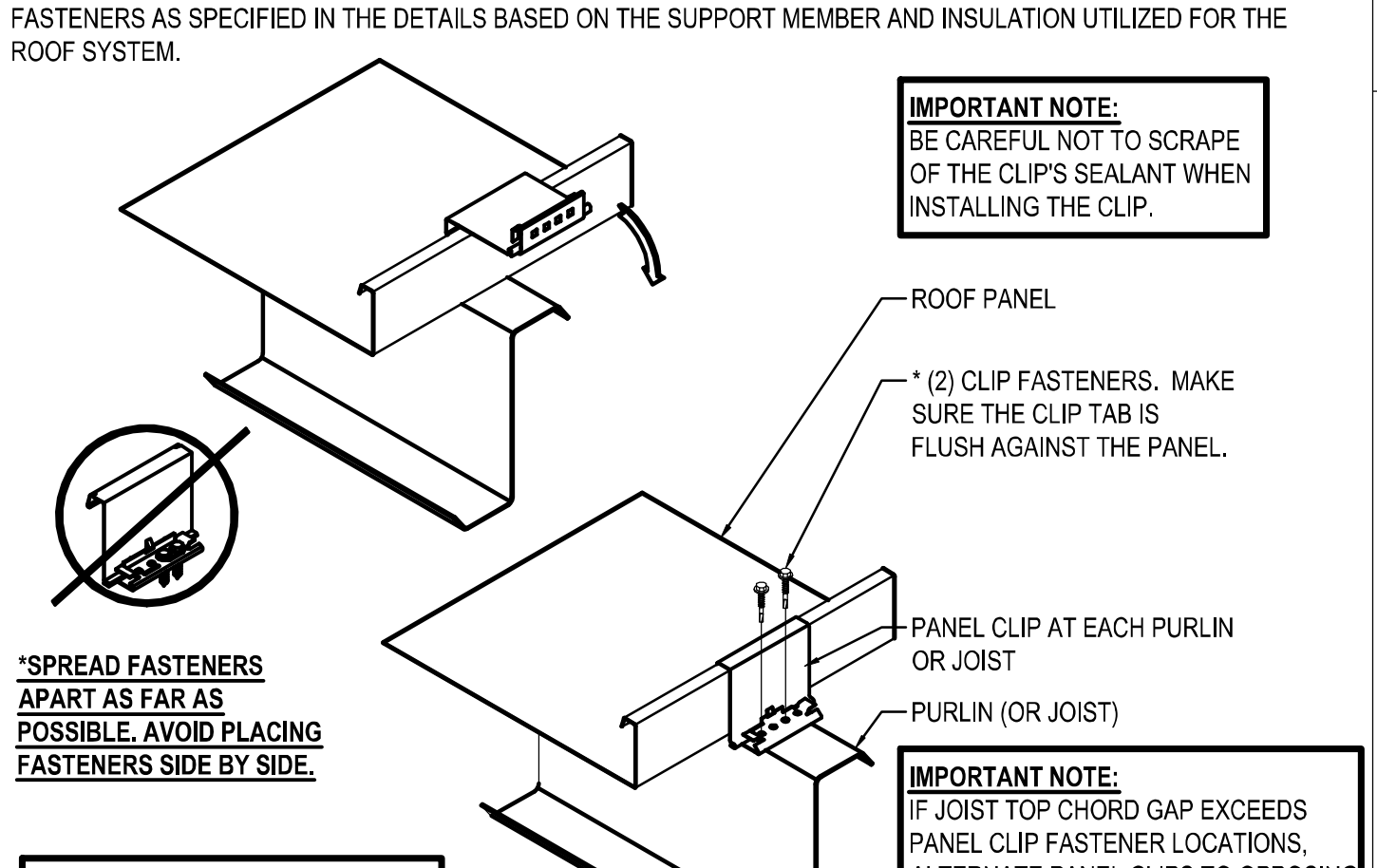

IMPORTANT NOTE:
BE CAREFUL NOT TO SCRAPE OF THE CLIP'S SEALANT WHEN INSTALLING THE CLIP.

***SPREAD FASTENERS APART AS FAR AS POSSIBLE. AVOID PLACING FASTENERS SIDE BY SIDE.**

IMPORTANT NOTE:
IF JOIST TOP CHORD GAP EXCEEDS PANEL CLIP FASTENER LOCATIONS, ALTERNATE PANEL CLIPS TO OPPOSING CHORD ANGLES TO PREVENT LOADING JOIST TO ONE SIDE.

THERMAL BLOCKS AND INSULATION NOT SHOWN FOR CLARITY

STANDARD CLIPS	
PART #	PART DESCRIPTION
H4550	UTILITY FIXED CLIP
LSBC-1	SHORT BEARING CLIP (USED WITH RIGID BOARD)
LSEC-1	SHORT SLIDING CLIP
LSEC-2T	TALL SLIDING CLIP

CLIP FASTENER SELECTION

PURLIN APPLICATION
H1020 FOR INSULATION ≤ R-19 (6 3/8")
H1025 FOR INSULATION = R-25 (8")
H1220 FOR UTILITY CLIP

JOIST APPLICATION
H1070 FOR INSULATION ≤ R-19 (6 3/8")
H1075 FOR INSULATION = R-25 (8")

RAKE ANGLE / RAKE CLIP PREPARATION

PRIOR TO INSTALLING THE ROOF INSULATION THE SECONDARY MEMBER WILL NEED TO BE PRE-DRILLED FOR THE RAKE CLIPS. PRE-DRILLING WILL MAKE INSTALLATION OF THE RAKE AND CLIPS MUCH EASIER AFTER INSULATION IS IN PLACE. DO NOT INSTALL RAKE CLIPS UNTIL INSULATION (IF REQUIRED) IS INSTALLED. **RAKE CLIP IS INSTALLED ON TOP OF THE INSULATION.**

SNAP A CHALK LINE AS SHOWN BELOW FROM HIGH EAVE / RIDGE TO LOW EAVE. DRILL 3/16" Ø HOLE CENTERED ON SECONDARY MEMBER. THIS IS HELPS TO ALIGN THE START PANEL.

NOTE: IMP WALL PANEL >4" THICK REQUIRE ANGLES ON TOP OF SECONDARY MEMBER EXTENDED BEYOND STEEL LINE TO ALLOW FOR RAKE CLIP ATTACHMENT. ATTACH WITH (1) H1020 / H1070 TO PURLIN / JOIST PRIOR TO RAKE CLIP INSTALLATION.

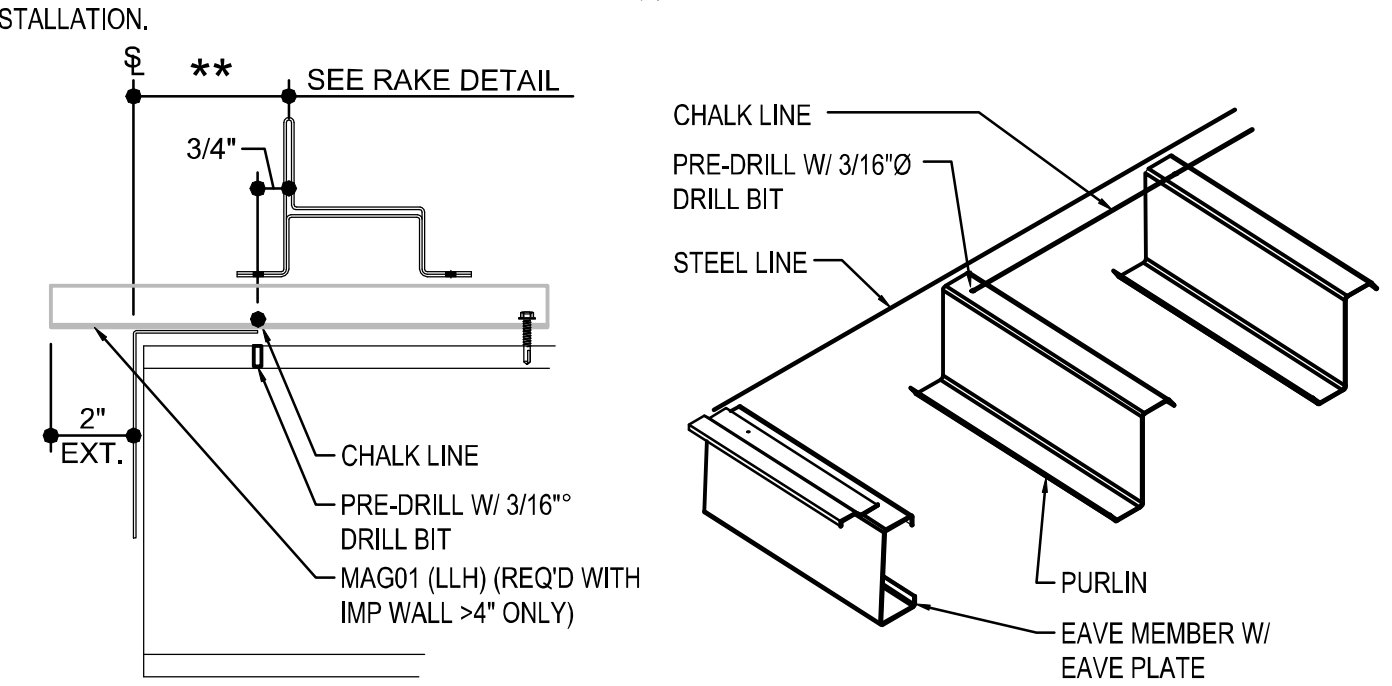

RAKE ANGLE / RAKE CLIP INSTALLATION

AFTER INSULATION IS IN PLACE AND PRIOR TO INSTALLING THE RAKE CLIPS AND RAKE ANGLE APPLY 1 1/2" TAPE MASTIC ON TOP OF THE EAVE PLATE BUT ONLY REMOVE PAPER BACKING WHERE THE RAKE ANGLE WILL REST. THIS WILL SEAL BETWEEN THE EAVE PLATE AND THE RAKE ANGLE.

SLIDE RAKE CLIPS ONTO RAKE ANGLE PRIOR TO SECURING THE RAKE CLIPS TO THE SECONDARY MEMBERS. PLACE THE RAKE CLIPS AND ANGLE OVER THE INSULATION USING A SMALL DRIFT PIN TO LOCATE THE PRE-DRILLED HOLE. INSTALL FASTENER THROUGH OPPOSITE CLIP HOLE INTO SECONDARY MEMBER. REMOVE DRIFT PIN AND INSTALL SECOND FASTENER TO SECURE CLIP. NOTE: (2) SCREWS ARE REQUIRED IN EVERY CLIP. DO NOT CUT INSULATION OUT FROM AROUND THE CLIP.

PLACE ADDITIONAL PIECE OF 1 1/2" TAPE MASTIC ON TOP OF RAKE ANGLE AND MARRY INTO EAVE PLATE MASTIC. NEXT RUN 3/4" TAPE MASTIC ALONG BEND OF RAKE ANGLE.

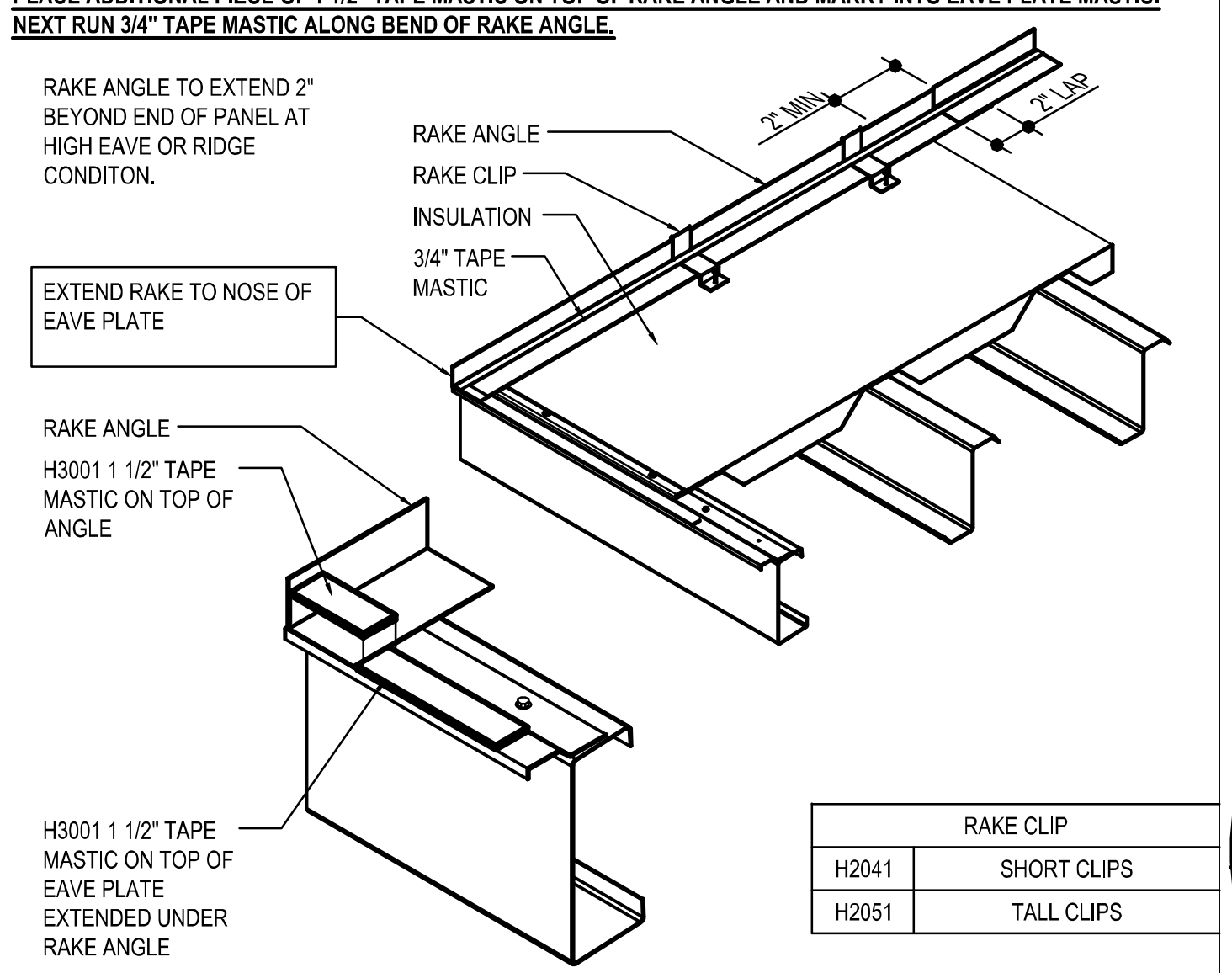

RAKE CLIP	
H2041	SHORT CLIPS
H2051	TALL CLIPS

* INSTALL FASTENERS IN EXACT SEQUENCE SHOWN TO PREVENT PANEL BUCKLING.

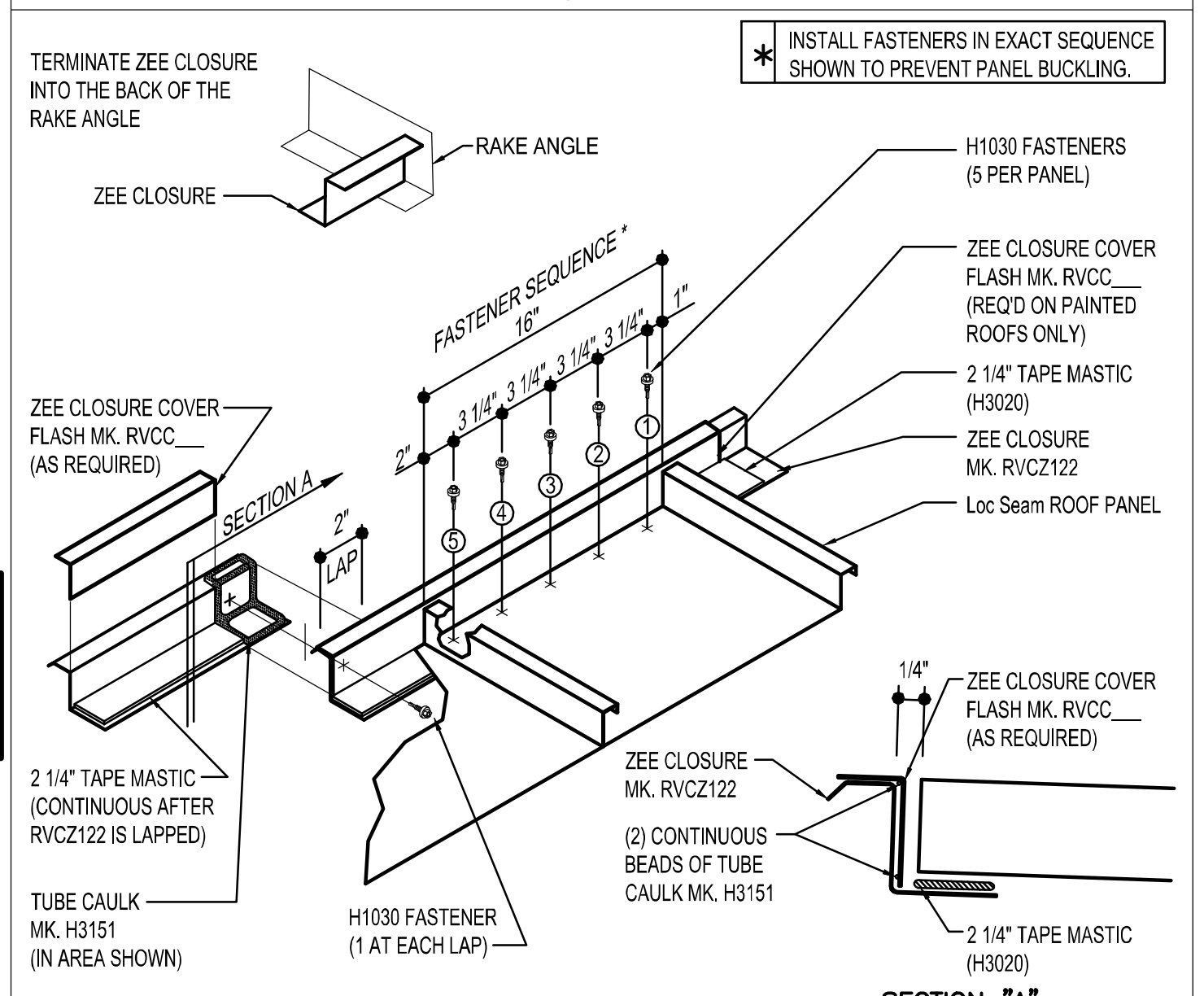

RIDGE/HIGHSIDE ZEE CLOSURE DETAIL

BACKUP PLATE INSTALLATION

THE BACKUP PLATE PROVIDES SUPPORT AT THE ENDLAP OF THE PANEL TO ALLOW FOR COMPRESSION OF SEALANTS. THE BACK UP PLATE HAS NOTCHES THAT SLIDE ONTO THE PANEL TO LOCATE AND HOLD THE BACKUP PLATE IN PLACE. AT THE RAKE CONDITION, THE BACKUP PLATE IS TO BE FIELD CUT FLUSH WITH THE HORIZONTAL LEG OF THE RAKE ANGLE. DO NOT EXTEND BACKUP PLATE ON TOP OF RAKE ANGLE.

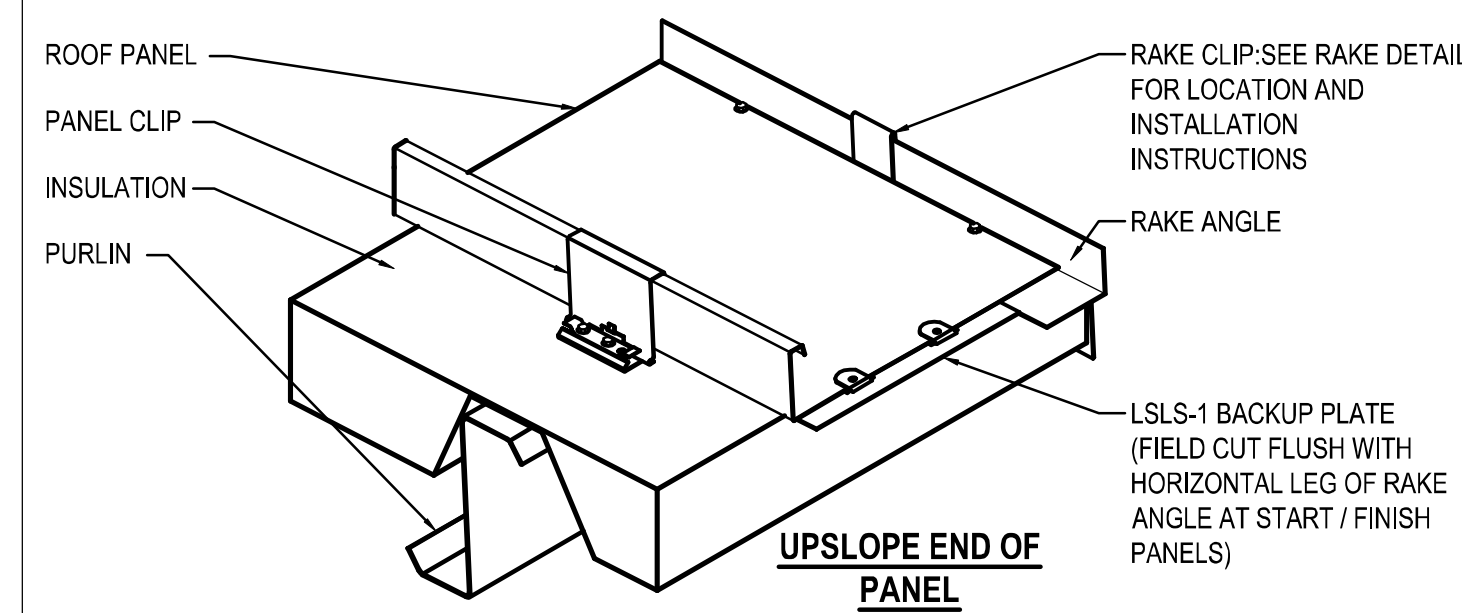

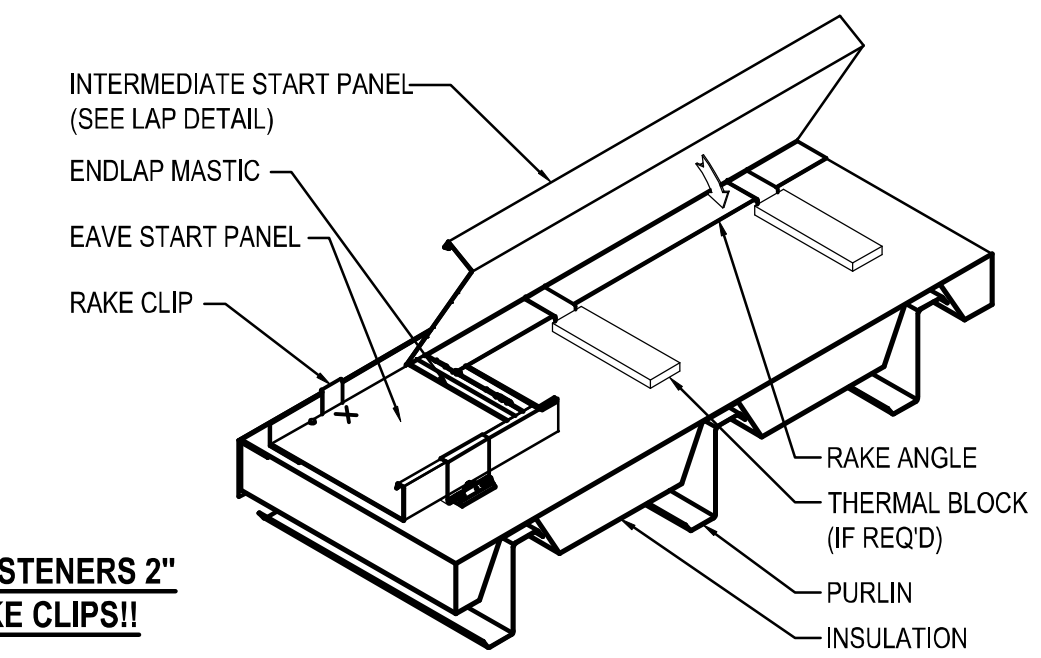

NOTE 1: KEEP FASTENERS 2" AWAY FROM RAKE CLIPS!!

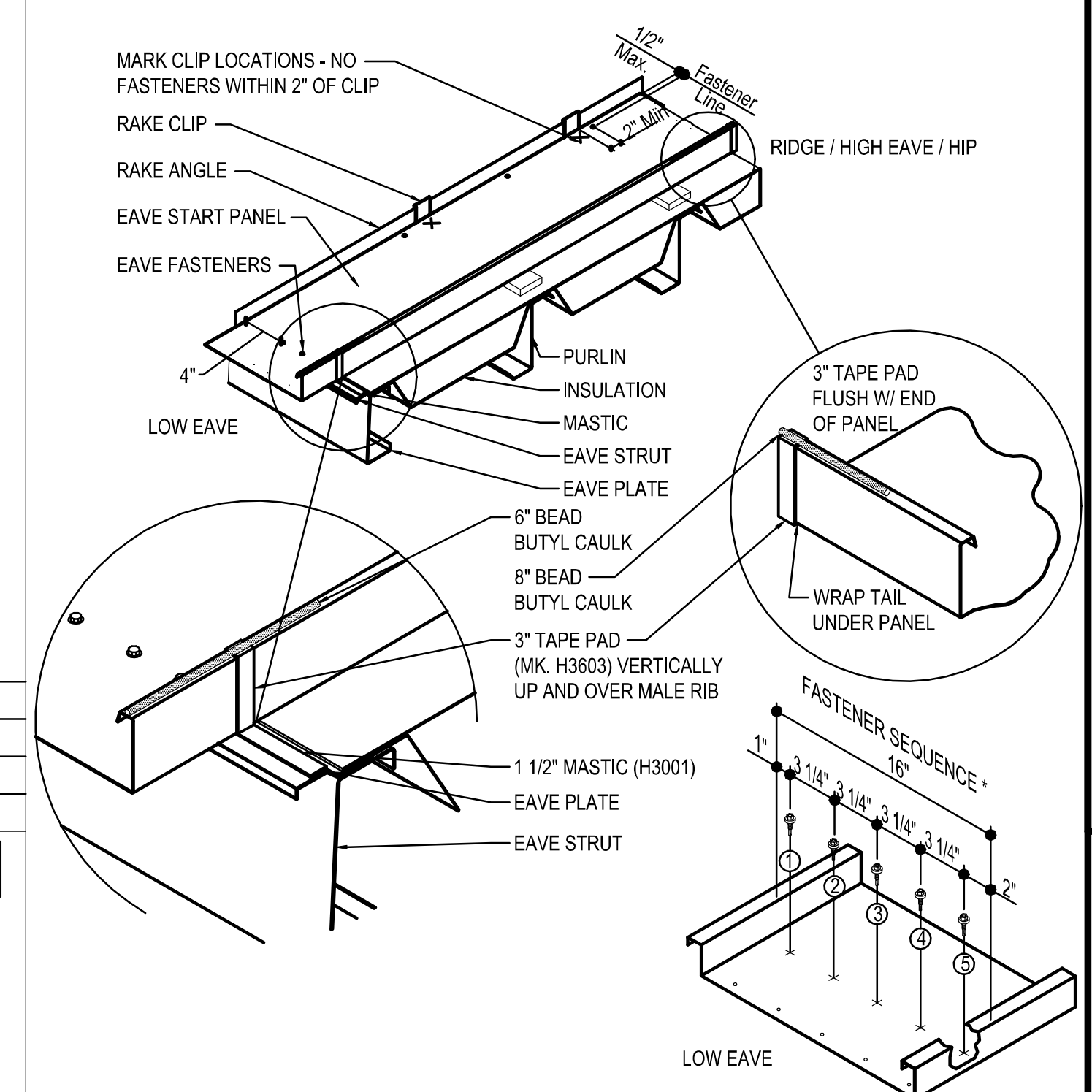

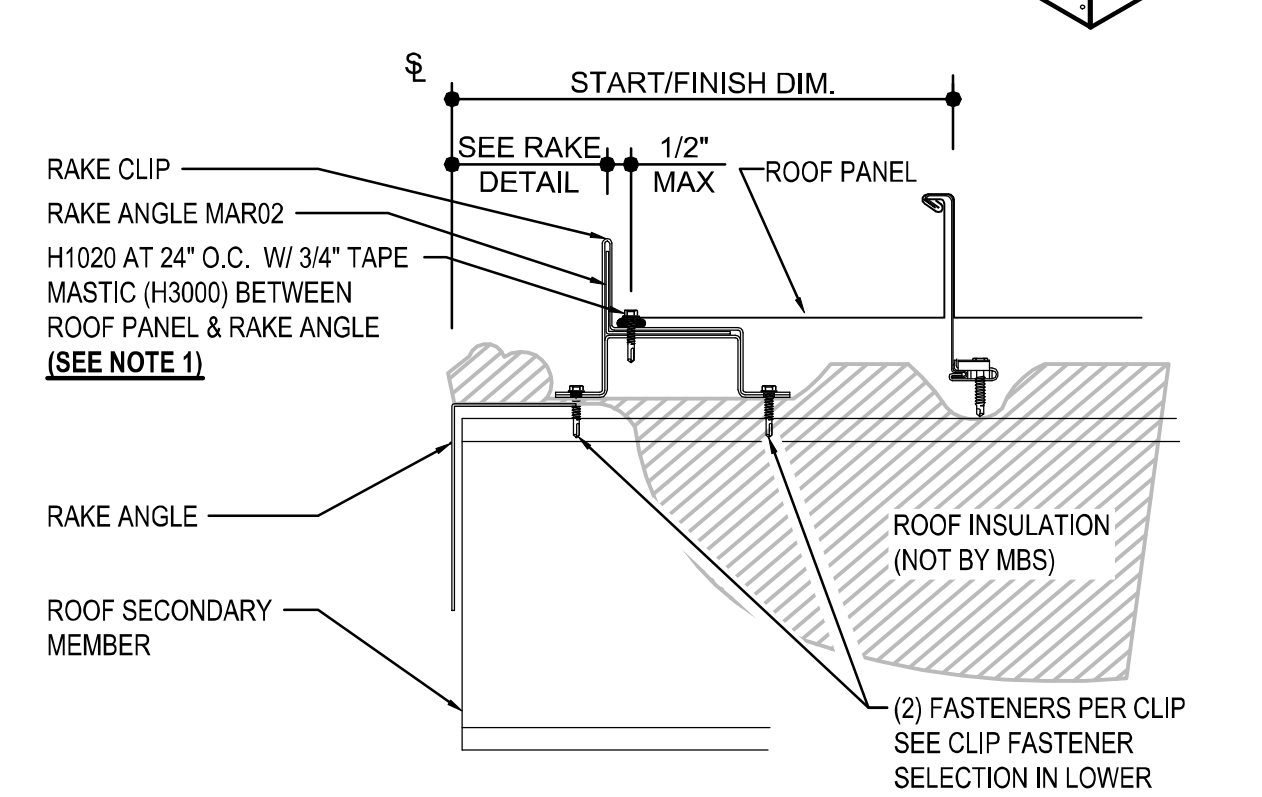

LOC SEAM BASIC INSTALLATION DETAIL

BASIC PANEL INSTALLATION INSTRUCTIONS
SEE ROOFLINE TRIM DETAILS FOR FURTHER INFORMATION

TRIM_14

ISSUE	DWN	CHK	ENG	PE	DATE
CONST. AB PLAN	NBS	EOP	CBM		7/24/2023
BUILDING DEPARTMENT REVIEW	MBS	DAN	CBM		7/31/2023

NUCOR BUILDING SYSTEMS
305 INDUSTRIAL PARKWAY, WATERLOO, IN 46793
PHONE: (260) 837-7891 FAX: (260) 837-7384
PO BOX 1006, 200 WHETSTONE RD, SWANSEA, SC 29160
PHONE: (803) 568-2100 FAX: (803) 568-2121
600 APACHE TRAIL, TERRELL, TX 75160
PHONE: (972) 524-5407 FAX: (972) 524-5417
1050 WATERY LANE, BRIGHAM CITY, UT 84302
PHONE: (435) 919-3100 FAX: (435) 919-3101

PROJECT NAME
WENDOVER FS #13 REPLACEMENT
WENDOVER, NV

CUSTOMER NAME
MICHAEL CLAY CORP
WINNEMUCCA, NV

JOB NUMBER
U23G0555A

SHEET TITLE

PROFESSIONAL ENGINEER - STATE OF NEVADA
RUSSELL R. SKEEM
07/31/2023
Exp. Jun 30, 2024
CIVIL/ STRUCTURAL
No. 016713

This seal pertains only to the materials designed and supplied by Nucor Building Systems, a division of Nucor Corporation. The drawings and the metal buildings which they represent are the product of Nucor Building Systems. The register professional engineer whose seal appears on these drawings is employed by Nucor Buildings Systems and does not serve as or represent the project engineer of record and shall not be construed as such.

SHEET
D11 of 20

PANEL MODULARITY SEQUENCE

THE PROCEDURES AND SEQUENCE SHOWN ARE RECOMMENDED TO AID IN MAINTAINING PANEL MODULARITY.
THE TOOLS SHOWN ARE NOT REQUIRED BUT RECOMMENDED TO AID INSTALLATION.

SPECIAL ATTENTION MUST BE GIVEN TO INSULATION SAG AND RECOMMEND PRE-DRILLING TO LOCATE CLIPS. MODULARITY TOOLS ARE AVAILABLE TO AID IN MODULARITY.

ENSURE THE INSULATION IS PERMITTED TO SAG AT MID-SPAN BETWEEN ROOF SECONDARY MEMBERS AND EXPANDED TO THE FULL THICKNESS WHILE STILL KEEPING CONTACT WITH BOTTOM OF PANEL.

DO NOT PULL THE INSULATION TAUT AS THIS WILL SIGNIFICANTLY REDUCE THE THERMAL PERFORMANCE OF THE ROOF SYSTEM AND COULD CAUSE ROOF PANEL MODULARITY ISSUES.

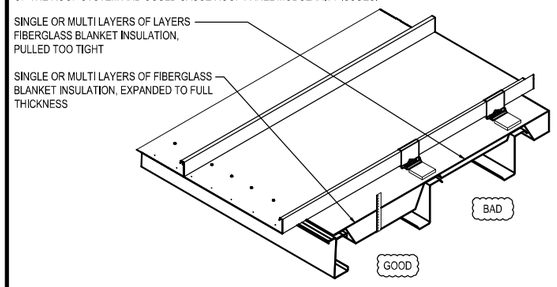

PRE-DRILL ONE PILOT HOLE FOR ROOF PANEL CLIPS AT MID-SPANS, HIGH SIDE OR RIDGE AND PANEL END LAPS, IF ANY.

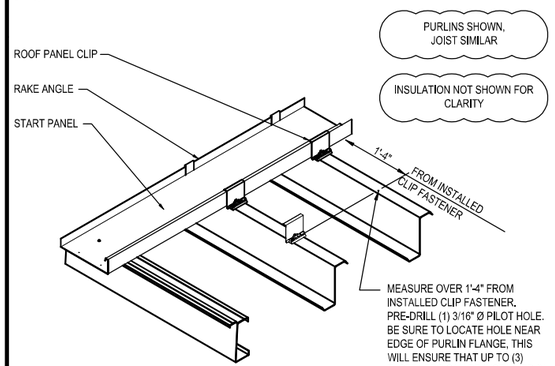

MEASURE OVER 1'-4" FROM INSTALLED CLIP FASTENER. PRE-DRILL (1) 3/16" Ø PILOT HOLE. BE SURE TO LOCATE HOLE NEAR EDGE OF PURLIN FLANGE, THIS WILL ENSURE THAT UP TO (3) FASTENERS CAN BE INSTALLED IN CLIP BASE (IF REQ'D BY DESIGN. REF. ERECTION DRAWINGS FOR FASTENER REQUIREMENTS).

USE RIB CLAMPS TO HOLD PANEL CLIPS IN PLACE, PRIOR TO FASTENING, TO MAINTAIN A CONSTANT 16" WIDE PANEL COVERAGE.

DO NOT ADJUST THE PANEL WIDTH BY MORE THAN ± 1/8" ON ANY PANEL.

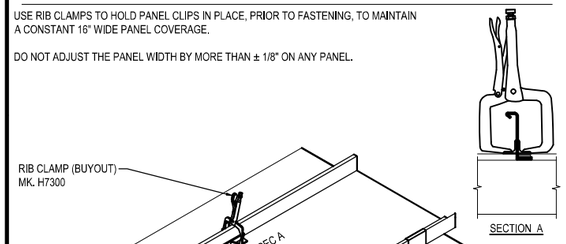

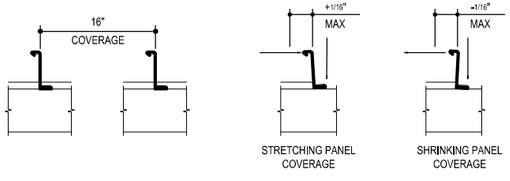

CORRECT PANEL MODULARITY

ADJUSTING PANEL MODULARITY

STAGE #1

1. ROLL FIRST FULL PANEL IN PLACE AND ALIGN CENTER OF PANEL FLAT TO SQUARE AS SHOWN BELOW.
2. APPLY THE LOW EAVE CLAMP AS SHOWN TO DRAW PANEL TIGHT TO CLOSURE.
3. INSTALL THE EAVE FASTENERS STARTING AT LEADING RIB.
4. AS PANEL INSTALLATION PROGRESSES, INSTALL MORE CLAMPS UPSLOPE AS SHOWN.
5. ADD, ADJUST OR LEAVE CLAMPS OFF TO MAINTAIN PANEL MODULARITY AS NECESSARY.
6. LEAVE CLAMPS ON FIRST FULL SEAM.

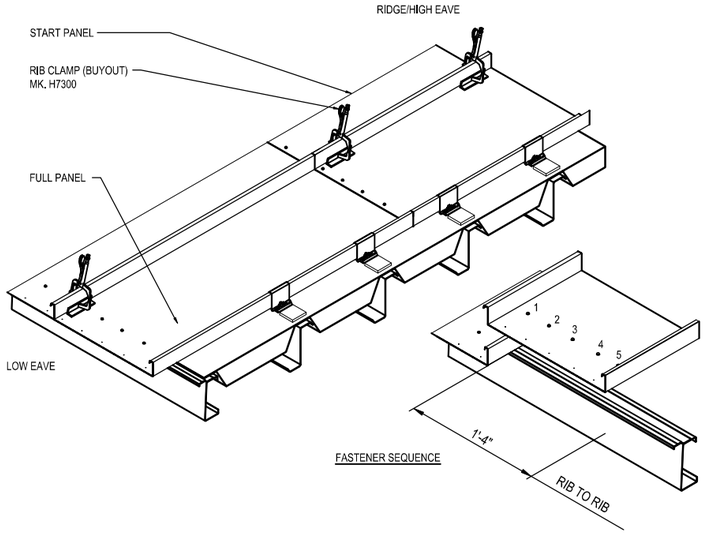

STAGE #2

1. INSTALL THE NEXT LOW EAVE PANEL AND ADD CLAMP.
2. REPEAT STEPS 2 THROUGH 6 FROM STAGE #1 NOTES.
3. LEAVE CLAMPS ON FIRST AND SECOND FULL SEAM.
4. INSTALL THE OUTSIDE CLOSURE IN THE FIRST FULL PANEL.

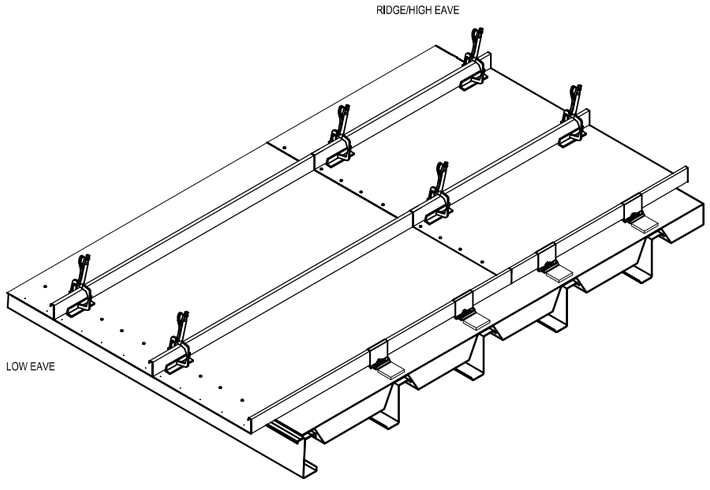

STAGE #3

1. KEEP CLAMPS IN PLACE ON THE FIRST TWO SEAMS WITH THE EXCEPTION OF THE LOW EAVE CLAMP.
2. INSTALL THE NEXT LOW EAVE PANEL AND LEAP FROG CLAMP AS SHOWN.
3. REPEAT STEPS 2 THROUGH 5 FROM STAGE #1 NOTES.

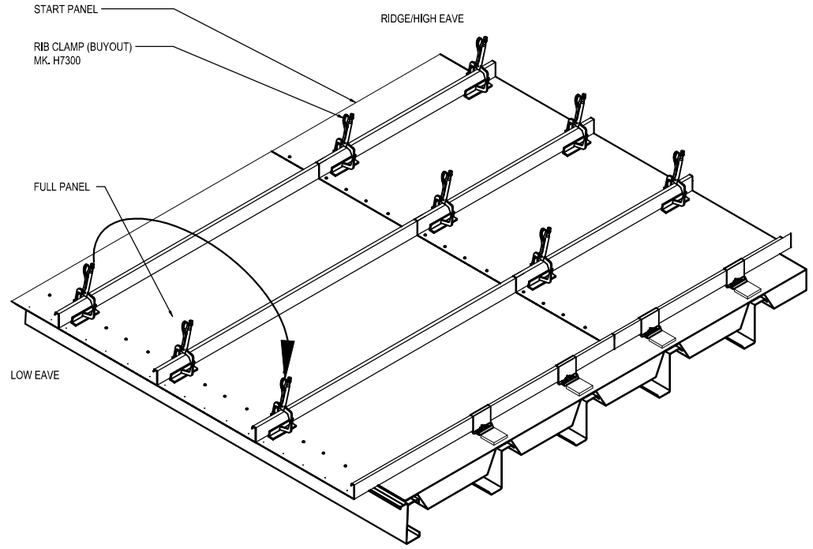

STAGE #4

1. KEEP CLAMPS IN PLACE ON THE FIRST TWO SEAMS WITH THE EXCEPTION OF THE LOW EAVE CLAMP.
2. INSTALL THE NEXT LOW EAVE PANEL AND LEAP FROG THE CLAMP AS SHOWN.
3. INSTALL EAVE PLATE FASTENERS.
4. AS PANEL INSTALLATION PROGRESSES, LEAP FROG CLAMPS FROM THREE SEAMS BACK ONTO PANEL SEAM AS SHOWN.
5. MAINTAIN TWO RUNS OF CLAMPS ON PREVIOUS SEAMS AS PANEL INSTALLATION CONTINUES.
6. REPEAT ALL STEPS / STAGES OF THIS METHOD THROUGHOUT THE ROOF PANEL ERECTION.

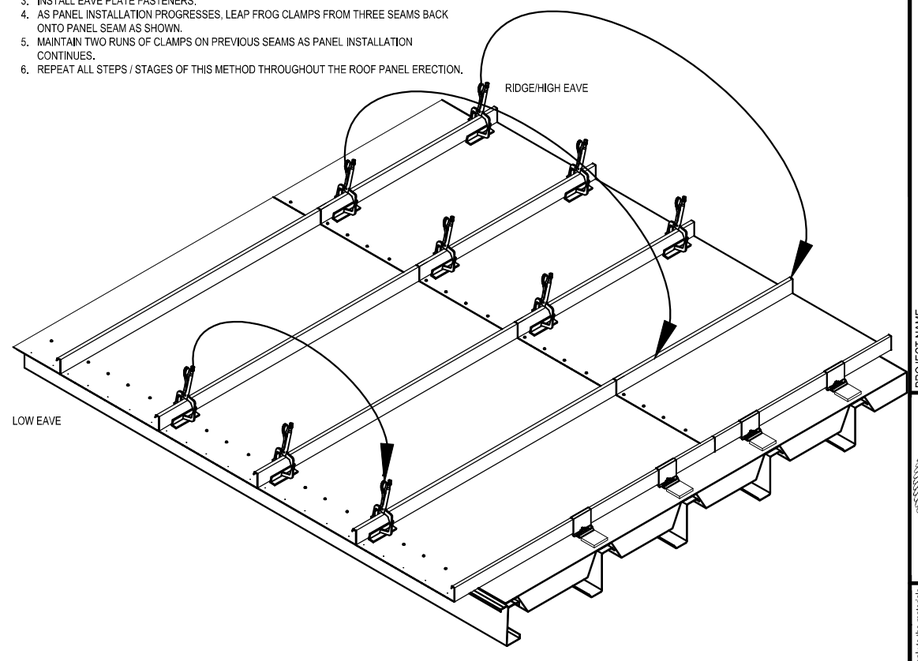

MODULARITY GUIDANCE

SPECIAL ATTENTION TO ABOVE STEPS TO MAINTAIN PROPER PANEL MODULARITY AND THERMAL PERFORMANCE IS CRITICAL. FAILURE TO DO SO WILL RESULT IN UNSIGHTLY PANEL APPEARANCE.

TRIM_15

ISSUE	DWN	CHK	ENG	PE	DATE
CONST. AB PLAN	NBS	EOP	CBM		7/24/2023
BUILDING DEPARTMENT REVIEW	WBS	DAN	CBM		7/31/2023

NUCOR BUILDING SYSTEMS
300 INDUSTRIAL PARKWAY, WATERLOO, IN 46793
PHONE: (260) 837-7891 FAX: (260) 837-7384
PO BOX 1006, 200 WHETSTONE RD, SWANSEA, SC 29160
PHONE: (803) 568-2100 FAX: (803) 568-2121
600 APACHE TRAIL, TERRELL, TX 75160
PHONE: (972) 524-4500 FAX: (972) 524-4417
1050 WATER LANE, BRIGHAM CITY, UT 84302
PHONE: (435) 919-3100 FAX: (435) 919-3101

PROJECT NAME: WENDOVER FS #13 REPLACEMENT
WENDOVER, NV

CUSTOMER NAME: MICHAEL CLAY CORP
WINNEMUCCA, NV

JOB NUMBER: U23G0555A

SHEET TITLE

PROFESSIONAL ENGINEER - STATE OF NEVADA
RUSSELL R. SKEEM
07/31/2023
Exp. Jun 30, 2024
CIVIL/STRUCTURAL
No. 016713

This set of plans and/or specifications, in the materials and/or electronic media furnished by Nucor Building Systems, a division of Nucor Corporation, is intended only for the project named herein. The drawings and the information they contain are the property of Nucor Building Systems and may not be used on other projects. Only a professional engineer employed by Nucor Building Systems is authorized to make changes to these drawings and only he/she may affix his/her seal to them. Any unauthorized use of these drawings is at the sole risk of the party using or relying on them. Nucor Building Systems and its employees accept no responsibility for damages, if any, suffered by any party as a result of such unauthorized use. Unauthorized use of these plans and specifications is expressly forbidden and shall not be construed as publication in derogation of Nucor Building Systems' common law copyright or other property rights.

SHEET: D12 of 20

IMPORTANT NOTE:

THE INSTRUCTIONS ON THIS PAGE ONLY ADDRESS THE USE OF THE HAND CRIMPING TOOLS. INSTRUCTIONS FOR MECHANICAL SEAMING, IF REQUIRED, ARE OUTLINED IN THE SEAMING MANUAL, WHICH IS INCLUDED WITH THE MECHANICAL SEAMER KIT PROVIDED BY THE SEAMER RENTAL COMPANY.

SPECIALIZED SEAMING AND HAND CRIMPING TOOLS
THE FINISHED SEAM OF THE ROOF PANELS REQUIRES SPECIAL SEAMING TOOLS THAT ARE AVAILABLE ONLY THROUGH THE MBS. CAUTION: THE USE OF OTHER SEAMING / CRIMPING EQUIPMENT WILL RESULT IN FAULTY AND / OR DAMAGED SEAMS AND SHALL INVALIDATE ANY OF THE ROOF SYSTEM'S MATERIAL AND WEATHER TIGHTNESS WARRANTIES.

SEAMING TOOL SOURCE
THE SEAMING TOOLS ARE PROVIDED BY MBS IN ACCORDANCE WITH THE TERMS AND CONDITIONS OF THE ORDER DOCUMENTS. CONTACT YOUR SERVICE REPRESENTATIVE TO PURCHASE NECESSARY CRIMPING TOOLS. CONTACT THE SEAMER RENTAL COMPANY FOR RENTAL INFORMATION OF THE MECHANICAL SEAMER IF REQUIRED.

CRIMPING & SEAMING REQUIREMENTS

THE DESIGN OF THIS STRUCTURE REQUIRES SEAMING TO MEET DESIGN AND CODE REQUIREMENTS. SEE THE SEAMING PLAN FOR ROOF PLANE SPECIFIC SEAMING REQUIREMENTS.
THERE ARE THE TWO SEAM TYPES POSSIBLE WITH THE NBG Loc Seam AS NOTED BELOW. ALL OF THESE SEAM TYPES CAN BE ACHIEVED WITH THE AVAILABLE CRIMPERS. IT IS RECOMMENDED TO RENT A MECHANICAL SEAMER TO AID IN THE SEAMING PROCESS.

1. **NBG Loc Seam 90**
   THE Loc Seam 90 SEAM REQUIRES HAND CRIMPING THE ROOF PANEL WITH THE MANUAL SEAMING TOOL AT THE STARTING EAVE OR RIDGE END OF THE PANELS, AND AT THE END LAPS. ONCE THE HAND CRIMPING HAS BEEN COMPLETED, THEN SEAM THE FULL LENGTH OF THE ROOF PANELS WITH THE MOTORIZED SEAMING MACHINE.
2. **NBG Loc Seam 360**
   THE Loc Seam 360 SEAM IS ACHIEVED BY RUNNING THE SINGLE DIRECTIONAL SEAMER OVER THE ENTIRE ROOF. THE ERECTOR MUST FIRST HAND CRIMP ENTIRE ROOF PANEL IN THE Loc Seam 90 SEAM WITH THE MANUAL SEAMING TOOL. BEFORE THE SEAMER IS LOCKED ON, THE LOW END OF THE PANEL MUST BE HAND CRIMPED INTO A NBG Loc Seam 360 SEAM, UTILIZING THE HAND CRIMPER THAT IS SUPPLIED IN THE SEAMER KIT. THIS WILL ENABLE YOU TO LOCK THE SEAMER ONTO THE PANEL SEAM. THEN SEAM THE FULL LENGTH OF THE ROOF PANEL.

NBG Loc Seam 90 SEAM

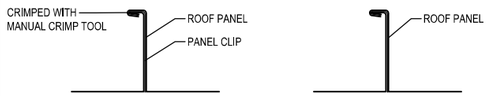

AT PANEL CLIPS — BETWEEN CLIPS

NBG Loc Seam 360 SEAM

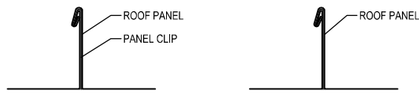

AT PANEL CLIPS — BETWEEN CLIPS

CHECK PANEL ASSEMBLY

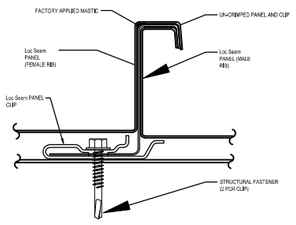

SIDE LAP FIT-UP
BEFORE SEAMING, INSPECT THE FULL LENGTH OF EACH ROOF PANEL SIDE LAP. CHECK THAT THE TWO PANELS ARE PROPERLY HAND CRIMPED AT ALL CLIP LOCATIONS, LOW EAVE, HIGH EAVE AND END LAPS. ANY CONDITIONS WHERE THE PANEL **IS NOT** CRIMPED PROPERLY **MUST** BE CORRECTED BEFORE ATTEMPTING TO SEAM THE ROOF PANELS. **UN-SEAMED ROOF PANELS CANNOT PROVIDE THEIR DESIGNED WIND LOAD AND WEATHER RESISTANCE.**

CLIP ALIGNMENT
BEFORE CRIMPING AND / OR SEAMING, INSPECT THAT EACH ROOF PANEL CLIP IS PROPERLY ENGAGED IN THE SIDE LAP ASSEMBLY. ANY DISPLACED CLIPS MUST BE CORRECTED BEFORE ATTEMPTING TO CRIMP / SEAM THE ROOF PANELS. PANEL CLIPS THAT ARE NOT PROPERLY ENGAGED AND ALIGNED CAN CAUSE FAULTY CRIMP / SEAM AND OBJECTIONABLE SEAM APPEARANCE. **THE MBS NOR THE SEAMER RENTAL COMPANY CAN BE HELD RESPONSIBLE FOR ANY CONCERNS RELATED TO IMPROPERLY ALIGNED CLIPS.**

SEAM DAMAGE
BEFORE CRIMPING AND / OR SEAMING, INSPECT THAT EACH ROOF PANEL MALE AND FEMALE ARE FREE FROM DISTORTION AND KINKS WHICH CAN LEAD TO DIFFICULTY AND / OR DAMAGE TO THE PANEL WHILE ATTEMPTING TO CRIMP / SEAM THE PANEL. ANY DISTORTIONS / KINKS MUST BE CORRECTED BEFORE ATTEMPTING TO CRIMP / SEAM THE PANELS. **THE MBS NOR THE SEAMER RENTAL COMPANY CAN BE HELD RESPONSIBLE FOR ANY CONCERNS RELATED TO DAMAGE CAUSED IN THE FIELD.**

MANUAL CRIMPING TOOL OPERATION FOR Loc Seam 90 SEAM

ASSEMBLE THE SEAMING TOOL
WHEN RECEIVED, THE MANUAL CRIMPING TOOL MAY BE DISASSEMBLED. ASSEMBLE THE HANDLE TO THE TOOL BODY WITH THE PROVIDED BOLTS.

TOOL ORIENTATION TO SEAM
ORIENT THE TOOL TO FIT CORRECTLY ON THE ROOF PANEL SEAM (SEE SECTION A BELOW). THE STATIONARY HANDLE MUST BE IN THE HORIZONTAL POSITION AND THE OPERATING HANDLE MUST BE ROTATED UP TO THE OPEN OR VERTICAL POSITION

FORMING THE SEAM
WHEN THE TOOL IS CORRECTLY POSITIONED ON THE PANEL, PUSH THE STATIONARY BLADE SOLIDLY AGAINST THE TOP OF THE SEAM. WHILE HOLDING THE STATIONARY HANDLE IN THE HORIZONTAL POSITION, ROTATE THE OPERATING HANDLE DOWN TO THE HORIZONTAL POSITION. THIS WILL FORM THE SEAM (SEE SECTION B BELOW).

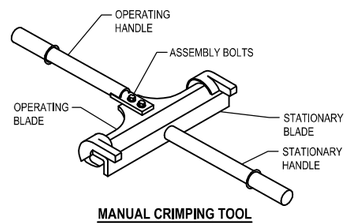

MANUAL CRIMPING TOOL

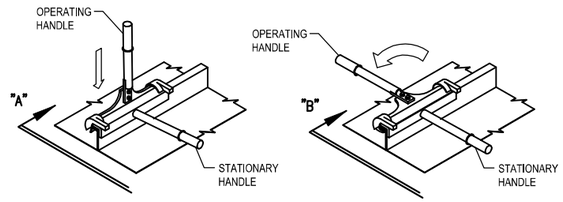

STEP 1 — STEP 2

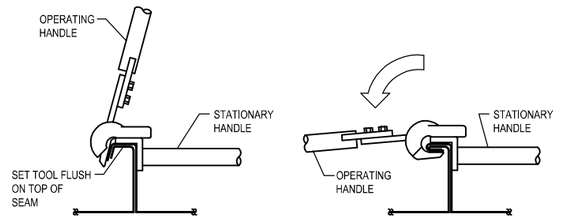

SECTION "A" — SECTION "B"

MANUAL CRIMPING TOOL OPERATION FOR Loc Seam 90 SEAM CONT.

TOOL POSITION ON THE ROOF
WHEN HAND SEAMING AT THE LOW EAVE, RIDGE END, END LAP AND **ALL** ROOF CLIP LOCATIONS. THE SEAMING MUST BE DONE IN TWO STEPS.
STEP 1: POSITION THE CRIMPING TOOL AS SHOWN BELOW IN THE VARIOUS AREAS OF THE ROOF. ROTATE THE MOVEABLE HANDLE DOWN TO FORM A Loc Seam 90 SEAM. RELEASE HANDLE.

STEP 2: RE-POSITION THE CRIMPING TOOL AS SHOWN BELOW AND REPEAT STEP 1.

CHECKING THE FINISHED SEAM
ROTATE THE OPERATING HANDLE TO THE OPEN POSITION, REMOVE THE TOOL AND CHECK THAT THE SEAM IS CORRECTLY FORMED, AS SHOWN BELOW.

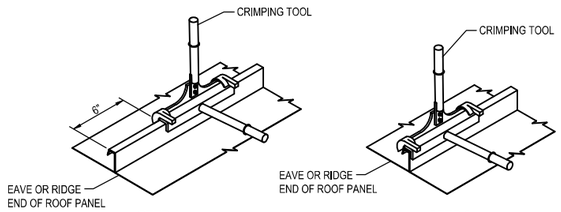

STEP 1 — STEP 2

MANUAL CRIMPING AT THE EAVE

ERECTOR NOTES:
THE ROOF SEAM PROFILE IS COMPLETE ONLY AFTER THE ENTIRE ROOF HAS BEEN MECHANICALLY SEAMED. IF BUILDING HAS LOC SEAM 360 SEAM, DO NOT SEAM / CRIMP THE PANEL INTO A LOC SEAM 360 SEAM 16" UP FROM THE LOW EAVE, OTHERWISE THE GUTTER BRACKET WILL NOT FIT UP PROPERLY.

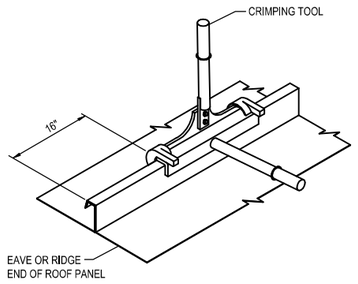

MANUAL CRIMPING AT THE EAVE

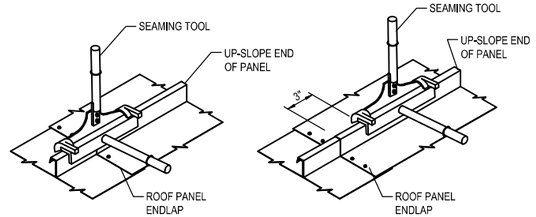

STEP 1 — STEP 2

MANUAL CRIMPING AT THE ENDLAP

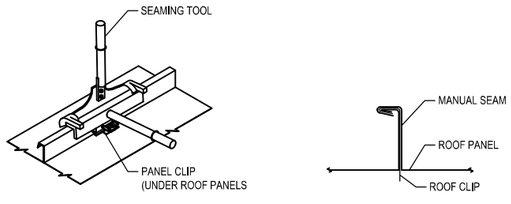

MANUAL CRIMPING AT ALL CLIPS — **FINISHED MANUAL HAND CRIMP**

LOC SEAM HAND CRIMPING NOTES
HAND CRIMING TOOLS AND PROCEDURES

TRIM_16

GUTTER LAP & END CAP

APPLY BEAD OF POLYURETHANE CAULK 1" FROM END OF TRIM AND LAP SECTIONS 2" AND FASTEN AS SHOWN. TO TERMINATE THE GUTTER APPLY POLYURETHANE CAULK TO THREE SIDES OF END CAP AND TOP RETURN AREA AS SHOWN AND INSERT INTO THE GUTTER LEAVING 1/2" EXPOSED. ATTACH WITH RIVETS SAME AS END LAP.

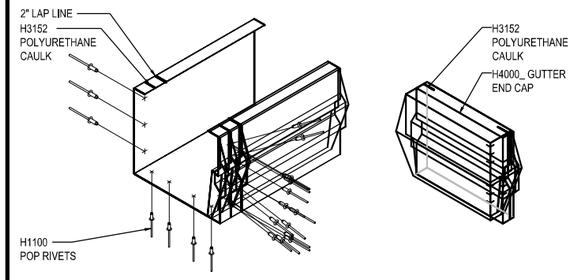

NOTE 1: PANEL RIB MUST BE HAND CRIMPED 90° (NOT 360°) PRIOR TO INSTALLING GUTTER BRACKET!

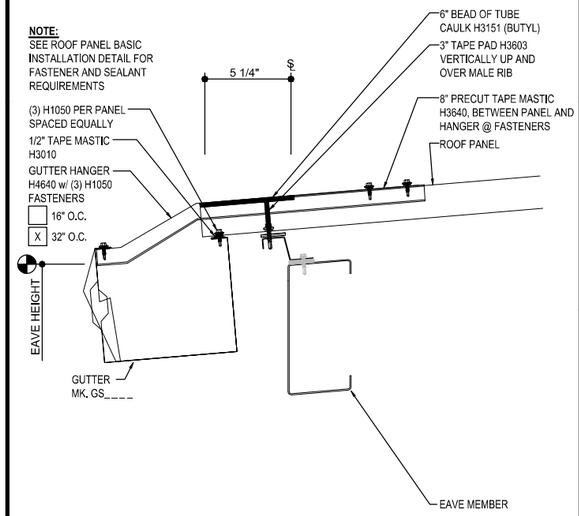

ON-SLOPE GUTTER DETAIL
EAVE GUTTER DETAIL w/ NO WALL PANEL

TRIM_17

ISSUE	DWN	CHK	ENG	PE	DATE
CONST. AB PLAN	NBS	EOP	CBM		7/24/2023
BUILDING DEPARTMENT REVIEW	WBS	DAN	CBM		7/31/2023

NUCOR BUILDING SYSTEMS
300 INDUSTRIAL PARKWAY, WATERLOO, IN 46793
PHONE: (260) 837-7891 FAX: (260) 837-7384
PO BOX 1006, 200 WHETSTONE RD, SWANSEA, SC 29160
PHONE: (803) 568-2100 FAX: (803) 568-2121
600 APACHE TRAIL, TERRELL, TX 75160
PHONE: (972) 551-6200 FAX: (972) 551-6417
1000 WATERY LANE, BRIGHAM CITY, UT 84302
PHONE: (435) 919-3100 FAX: (435) 919-3101

PROJECT NAME: WENDOVER FS #13 REPLACEMENT
WENDOVER, NV
CUSTOMER NAME: MICHAEL CLAY CORP
WINNEMUCCA, NV
JOB NUMBER: U23G0555A
SHEET TITLE

RUSSELL R. SKEEM — PROFESSIONAL ENGINEER — STATE OF NEVADA
07/31/2023
Exp. Jun 30, 2024
CIVIL/STRUCTURAL
No. 016713

This sheet contains only, to the materials described, and is provided by Nucor Building Systems, a division of Nucor Corporation. The drawings and the information shown on the drawings are the product of Nucor Building Systems' design staff and engineers or those employed by Nucor Building Systems and does not serve as a complete set of drawings unless signed and sealed and shall not be construed as such.

SHEET: D13 of 20

RAKE LAP & FLASHING BACKER

SLIDE FIELD CUT SECTION OF FLASHING ENDLAP BACKER ONTO THE LOWER TRIM PIECE AS SHOWN BELOW. PLACE TAPE MASTIC NEXT TO HEM OF THE BACKER (NOT ON TOP OF HEM). APPLY CONTINUOUS BEAD OF CAULK 1" FROM END OF TRIM DOWN PROFILE OF TRIM. FASTEN LAP WITH STITCH FASTENERS AND POP RIVETS AS SHOWN. ROOF STRUCTURAL FASTENERS SHOULD BE USED TO FASTEN THROUGH PANEL FLAT INTO RAKE ANGLE.

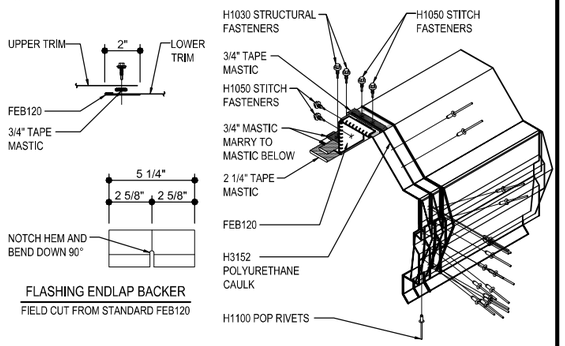

FLASHING ENDLAP BACKER

FIELD CUT FROM STANDARD FEB120

NOTE 1: KEEP FASTENERS 2" AWAY FROM RAKE CLIPS!!

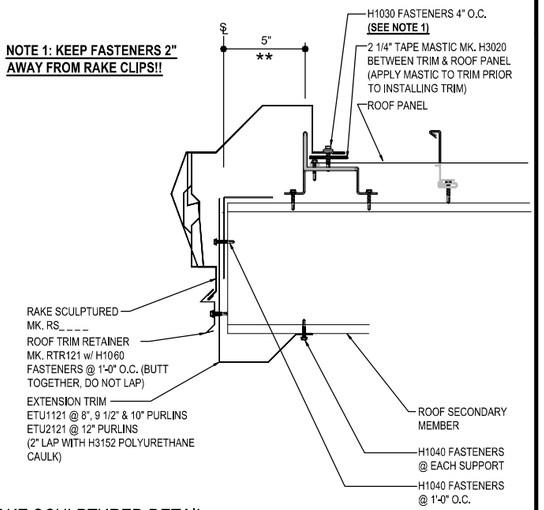

RAKE SCULPTURED DETAIL

RAKE SCULPTURED DETAIL w/ NO WALL PANEL

TRIM_18

PARAPET LAP & FLASHING BACKER

SLIDE FIELD CUT SECTION OF FLASHING ENDLAP BACKER ONTO THE LOWER TRIM PIECE AS SHOWN BELOW. PLACE TAPE MASTIC NEXT TO HEM OF THE BACKER (NOT ON TOP OF HEM). FASTEN LAP WITH STITCH FASTENERS. ROOF STRUCTURAL FASTENERS SHOULD BE USED TO FASTEN THROUGH PANEL FLAT INTO RAKE ANGLE.

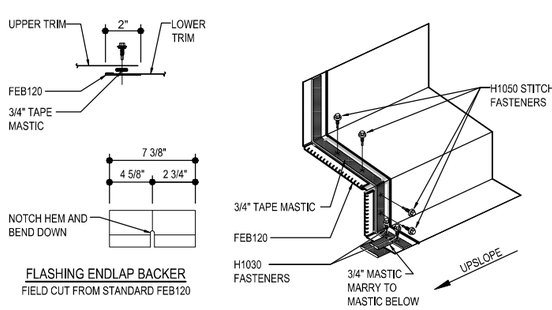

FLASHING ENDLAP BACKER

FIELD CUT FROM STANDARD FEB120

NOTE 1: KEEP FASTENERS 2" AWAY FROM RAKE CLIPS!!

NOTE 2: AS A STANDARD, PANELS WILL BE STEPPED IF ROOF SLOPE IS < 1/2:12
FIELD MITERING WILL BE REQUIRED IF ROOF SLOPE IS > 1/2:12

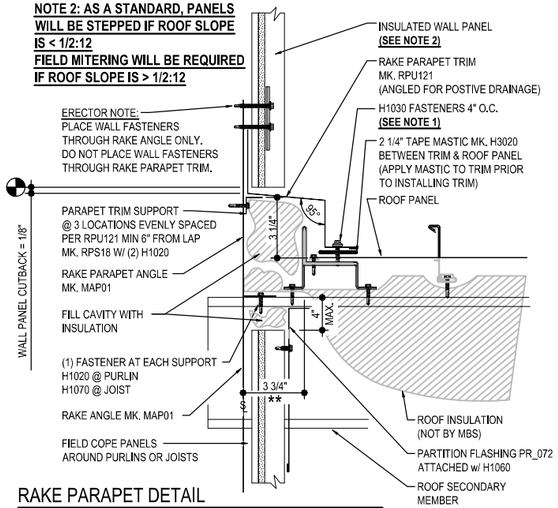

RAKE PARAPET DETAIL

RAKE PARAPET DETAIL w/ INSULATED WALL PANELS
SEE INSULATED WALL SHEETING ERECTION DETAILS FOR INSTALLATION INSTRUCTIONS.

TRIM_19

RIDGE CAP LAP & FLASHING BACKER

SLIDE FIELD CUT SECTION FLASHING ENDLAP BACKER ONTO THE LOWER TRIM PIECE. PLACE TAPE MASTIC NEXT TO HEM OF THE BACKER (NOT ON TOP OF HEM). MARRY LAP MASTIC WITH MASTIC BETWEEN RIDGE CAP AND RIDGE CLOSURE ZEE.

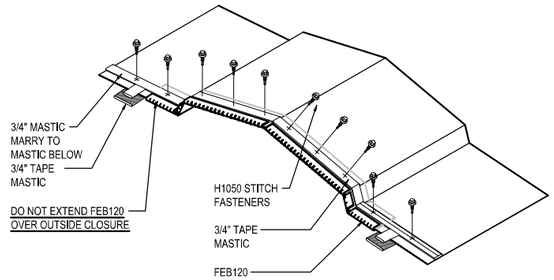

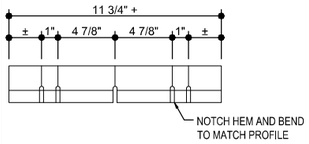

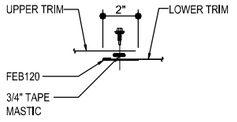

FLASHING ENDLAP BACKER

FIELD CUT FROM STANDARD FEB120

FILL RIDGE CAP WITH INSULATION TO PREVENT CONDENSATION

RIDGE CAP OPTIONS	
ROOF SLOPE	MARK NUMBER
> 1/4:12 & < 4:12	RVL3121
> 4:12 & < 6:12	RVL6121

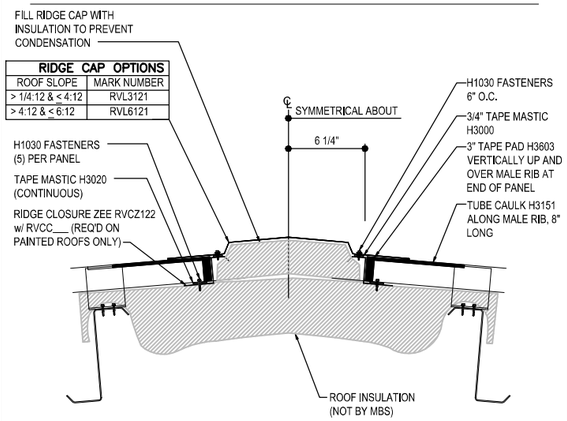

RIDGE TRIM DETAIL

RIDGE TRIM DETAIL

TRIM_20

ISSUE	DWN	CHK	ENG	PE	DATE
CONST. AB PLAN	NBS	EOP	CBM		7/24/2023
BUILDING DEPARTMENT REVIEW	WBS	DAN	CBM		7/31/2023

NUCOR BUILDING SYSTEMS
300 INDUSTRIAL PARKWAY, WATERLOO, IN 46793
PHONE: (260) 837-7891 FAX: (260) 837-7384
PO BOX 1006, 200 WHETSTONE RD, SWANSEA, SC 29160
PHONE: (803) 568-2100 FAX: (803) 568-2121
600 APACHE TRAIL, TERRELL, TX 75160
PHONE: (972) 524-4500 FAX: (972) 524-4417
1050 WATER LANE, BRIGHAM CITY, UT 84302
PHONE: (435) 919-3100 FAX: (435) 919-3101

PROJECT NAME: WENDOVER FS #13 REPLACEMENT
WENDOVER, NV

CUSTOMER NAME: MICHAEL CLAY CORP
WINNEMUCCA, NV

JOB NUMBER: U23G0555A

SHEET TITLE

RUSSELL R. SKEEM
07/31/2023
Exp. Jun 30, 2024
CIVIL/STRUCTURAL
NV. 016713

This set of plans and/or specifications is the property of Nucor Building Systems, a division of Nucor Corporation. The drawings and the information shown thereon are the property of Nucor Building Systems is employed by Nucor Buildings Systems and does not serve as a representation that any such copy will be made of record and shall not be construed as such.

SHEET

D14 of 20

SUGGESTED INITIAL PROCEDURES FOR INSTALLER:

1) CHECK ALL APPLICABLE FEDERAL, STATE AND LOCAL CODES TO VERIFY COMPLIANCE WITH THE CODE.

2) BE CERTAIN THAT SITE CONDITIONS ARE SUCH THAT SAFE WORKING PRACTICES ARE STRICTLY OBSERVED.

3) REVIEW ALL INSTALLATION DRAWINGS AND ASSOCIATED PROJECT DOCUMENTS.

4) CONSULT WITH THE GENERAL CONTRACTOR, DESIGN ENGINEER, ARCHITECT AND/OR OWNER TO CONFIRM THOSE RECOMMENDED.

5) COMPLY WITH ALL SAFETY REGULATIONS.

IT IS THE RESPONSIBILITY OF THE DESIGNER / CONTRACTOR / INSTALLER TO ENSURE THAT THE DETAILS AND INSTALLATION PROCEDURES ARE ADAPTED TO MEET PARTICULAR BUILDING REQUIREMENTS.
THE METAL BUILDING / PANEL SUPPLIER SHALL NOT BE HELD LIABLE FOR ANY AND ALL CLAIMS ARISING FROM LACK OF PROPER INSTALLATION. THE DESIGNER / INSTALLER MUST BE AWARE OF AND ALLOW FOR EXPANSION AND CONTRACTION OF WALL PANELS WHEN DESIGNING AND/OR INSTALLING WALL PANELS.

SOME FIELD CUTTING IS PART OF NORMAL ERECTION WORK. WORKMANSHIP SHALL CONFORM TO THE HIGHEST INDUSTRY STANDARDS. A CERTAIN AMOUNT OF WAVINESS CALLED "OIL CANNING" MAY EXIST IN THE PANEL. MINOR WAVINESS IS NOT SUFFICIENT CAUSE FOR REJECTION AND DOES NOT AFFECT THE STRUCTURAL INTEGRITY OF THE PANEL. MINIMIZING OR ELIMINATION THIS EFFECT CAN BE ACCOMPLISHED BY USING SIMPLE INDUSTRY STANDARD PROCEDURES DURING SURFACE PREPARATION.

NOTES FOR HANDLING PANELS AND COMPONENTS:

INSULATED PANELS ARE CAREFULLY INSPECTED AND BUNDLED PRIOR TO LOADING FOR SHIPMENT. IT IS THE RESPONSIBILITY OF THE TRANSPORTATION COMPANY TO DELIVER THESE COMPONENTS UNDAMAGED. IT IS THE CONSIGNEE'S RESPONSIBILITY TO INSPECT THE SHIPMENT FOR DAMAGE AND SHORTAGES WHEN IT IS RECEIVED.

WHEN A SHIPMENT IS RECEIVED, CHECK EACH ITEM AGAINST THE BILL OF LADING FOR QUANTITY, LENGTH, DAMAGE, ETC. IF A SHORTAGE OR DAMAGE IS FOUND, MAKE SURE A NOTATION OF IT IS MADE ON THE BILL OF LADING AND SIGNED BY THE DRIVER. THE MANUFACTURE CANNOT BE RESPONSIBLE FOR SHORTAGES OR DAMAGED MATERIALS UNLESS THEY ARE NOTED ON THE BILL OF LADING.

IN THE CASE OF PACKAGED COMPONENTS (SUCH AS CLIPS, FASTENERS, AND SEALANTS, ECT.), THE QUANTITIES ARE MARKED ON THEIR CONTAINER AND SHOULD BE CHECKED AGAINST THE BILL OF MATERIALS.

IT IS THE CUSTOMER'S RESPONSIBILITY TO MAKE ANY DAMAGE CLAIM. IMMEDIATELY NOTIFY THE DESIGNATED CUSTOMER SERVICE COORDINATOR OF ANY SHORTAGES OR DAMAGED MATERIALS. THIS WILL HELP TO MINIMIZE ANY ERECTION DELAYS THAT MAY RESULT FROM THE SHORTAGE OR DAMAGED MATERIALS.

UPON ARRIVAL OF PANELS, FORKLIFTS OR HOISTING EQUIPMENT WILL BE REQUIRED TO UNLOAD AND POSITION THE PANEL BUNDLES AND ACCESSORY CRATES FOR JOBSITE STORAGE AND INSTALLATION.

EXTREME CARE SHOULD BE TAKEN TO AVOID BUMPING THE PANELS WHILE LIFTING AND MANEUVERING. IN ALL CASES PANELS SHOULD NOT DEFLECT SIGNIFICANTLY IN THE LIFTING PROCESS.

IN HANDLING PANELS INDIVIDUALLY, ALL PERSONNEL MUST WEAR THE PROPER CLOTHING, PROTECTIVE EYE WEAR, AND GLOVES.

TO HELP PREVENT DAMAGES TO THE SURFACES AND EDGES:
- ALWAYS LIFT THE PANELS WHEN REMOVING THEM FROM BUNDLES, NEVER DRAG THEM.
- NEVER LIFT THE PANEL FROM THE FLAT POSITION BY THE OVERLAPPING RIB.
- DO NOT CARRY PANELS IN THE FLAT POSITION.

UNLOADING:

PANELS ARE SPIRAL WRAPPED WITH STRETCH-FILM AND SHIPPED FLAT. PANEL BUNDLES ARE REINFORCED AT SPECIFIED LIFTING POINTS TO PREVENT DAMAGE WHEN LIFTING. SEE FIGURE'S 1 AND 2 IN THIS SECTION TO DETERMINE WHERE THE LIFTING POINTS ARE FOR THE PANEL BUNDLES.

UNLOADERS MUST TAKE CARE THAT FORKLIFT FORKS ARE LOCATED AT THE PARTICLE BOARD ON THE PANEL BUNDLES BEFORE LIFTING.

EXTREME CARE SHOULD BE TAKEN TO AVOID BUMPING OR DROPPING THE PANELS WHEN LIFTING AND MANEUVERING.

WHEN UNLOADING BUNDLES OF 36'-0" OR LONGER IN LENGTH, TWO OR MORE LIFTING POINTS MAY BE REQUIRED. OVER ENGAGEMENT OF FORKS WILL CAUSE DAMAGE TO THE MATERIALS LOCATED ON THE OPPOSITE SIDE OF THE BUNDLE BEING LIFTED.

WHEN AN OVERHEAD CRANE IS USED, REINFORCED NYLON SLINGS OR STRAPS SHOULD BE USED (NO CHAINS OR CABLES SHOULD COME IN CONTACT WITH THE PANELS), ALONG WITH SUITABLE STIFF INSERTS LOCATED AT TOP AND BOTTOM OF THE BUNDLES AT THE SLING POSITIONS TO PROTECT THE PANELS FROM DAMAGE. ALSO, PLACE FOAM BLOCKS ON THE SIDES OF BUNDLES AT ALL SLING LOCATIONS.

NOTES:

REINFORCED LIFTING POINTS ARE CLEARLY MARKED ON THE PANEL BUNDLE (SEE FIGURES 1 & 2)

LONG LENGTH PANELS HAVE TWO OR MORE LIFTING POINTS (SEE FIGURE 2).

USE EXTREME CARE TO AVOID BUMPING OR DROPPING THE PANELS WHILE LIFTING AND MANEUVERING.

HOIST THE PANELS TO THE ROOF WITH THE AID OF NYLON SLINGS AND A SPREADER BAR TO PREVENT ANY CHANCE OF BENDING OR BUCKLING THE PANELS.

UNLOADING WITH A FORKLIFT:

- OVER ENGAGEMENT OF FORKS WILL CAUSE DAMAGE TO THE MATERIALS LOCATED ON THE OPPOSITE SIDE OF THE BUNDLE BEING LIFTED
- PANELS SHOULD NOT DEFLECT SIGNIFICANTLY IN THE LIFTING PROCESS.
- ENSURE THE FORKS STRADDLE THE DESIGNATED LIFT POINT.
- LIFT BUNDLES ONE AT A TIME WITH THE FORKLIFT

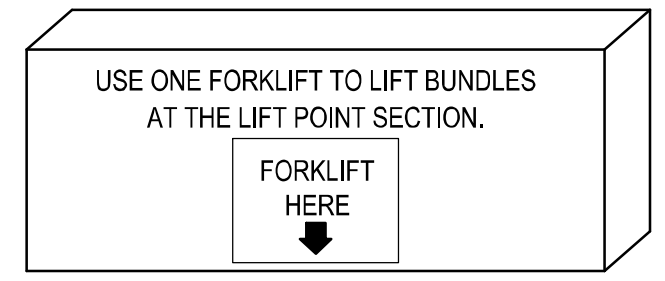

FIGURE 1
STANDARD LENGTH BUNDLES

- BE CAREFUL WHEN UNLOADING OR MOVING LONG LENGTH BUNDLES
- DO NOT POSITION YOUR LIFT AT THE CENTER OF THE BUNDLE, THIS MAY CAUSE PANEL DAMAGE.
- EACH FORKLIFT SHOULD STRADDLE ONE LIFT POINT.

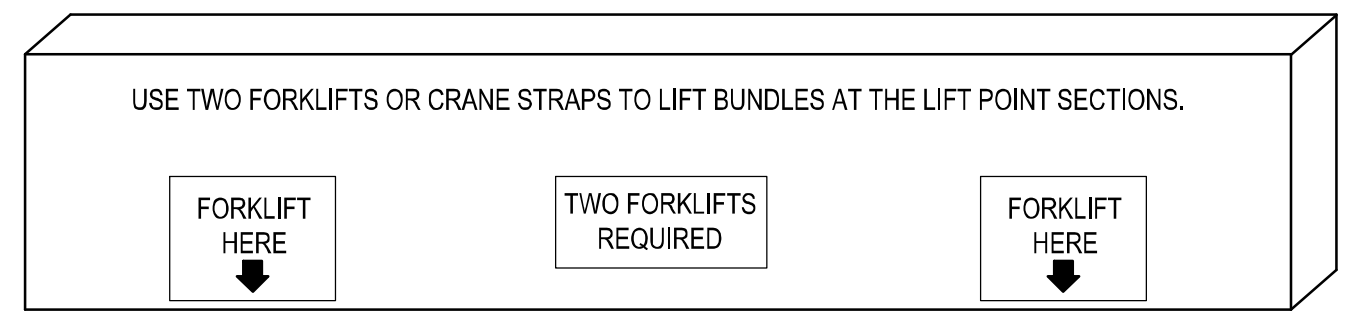

FIGURE 2
LONG LENGTH BUNDLES

UNLOADING WITH AN OVERHEAD CRANE:

- USE NYLON REINFORCED SLINGS OR STRAPS LOCATED AT A MINIMUM OF TWO POINTS ALONG THE LENGTH OF THE BUNDLE FOR CRANE LIFTING OF THE INDIVIDUAL BUNDLES.
- CHAINS OR CABLES SHOULD NOT COME IN CONTACT WITH THE PANELS.
- SUITABLY STIFF INSERTS SHOULD BE LOCATED AT TOP AND BOTTOM OF THE BUNDLES AT THE SLING POSITIONS TO PROTECT THE EDGES OF THE UPPER AND LOWER PANELS.
- PLACE FOAM BLOCKS ON THE SIDES OF BUNDLES AT ALL SLING LOCATIONS.
- WHEN BUNDLES ARE LONGER THAN 15'-0" IT IS SUGGESTED THAT A PROPERLY DESIGNED AND FABRICATED LIFTING BEAM IS USED.

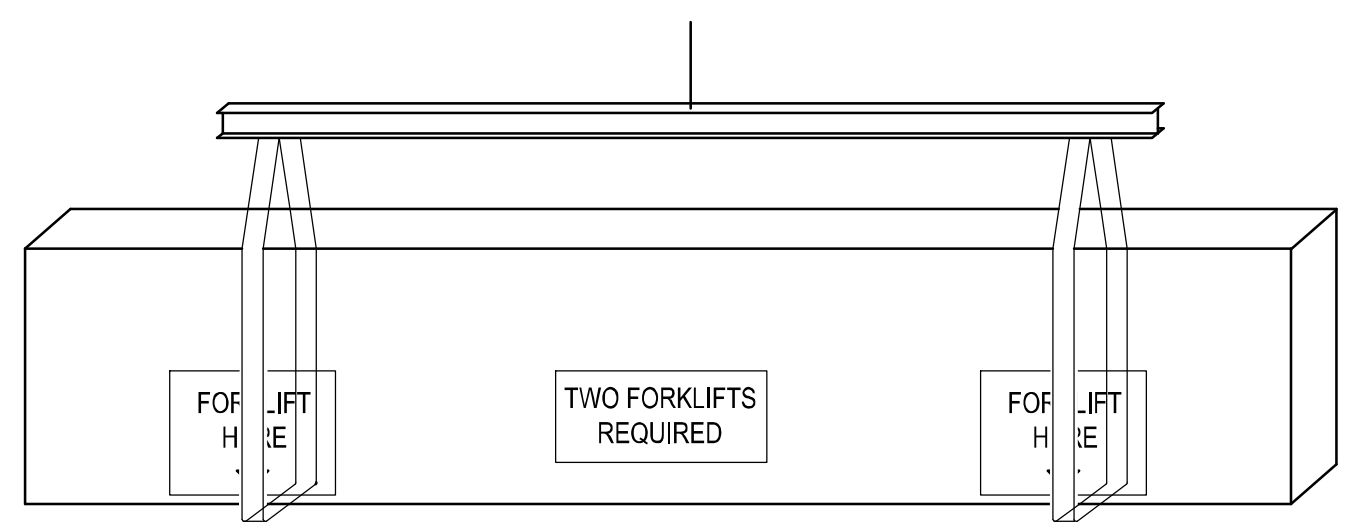

FIGURE 3
BUNDLES UNDER 4,000 LBS AND LESS THAN 44'-0"

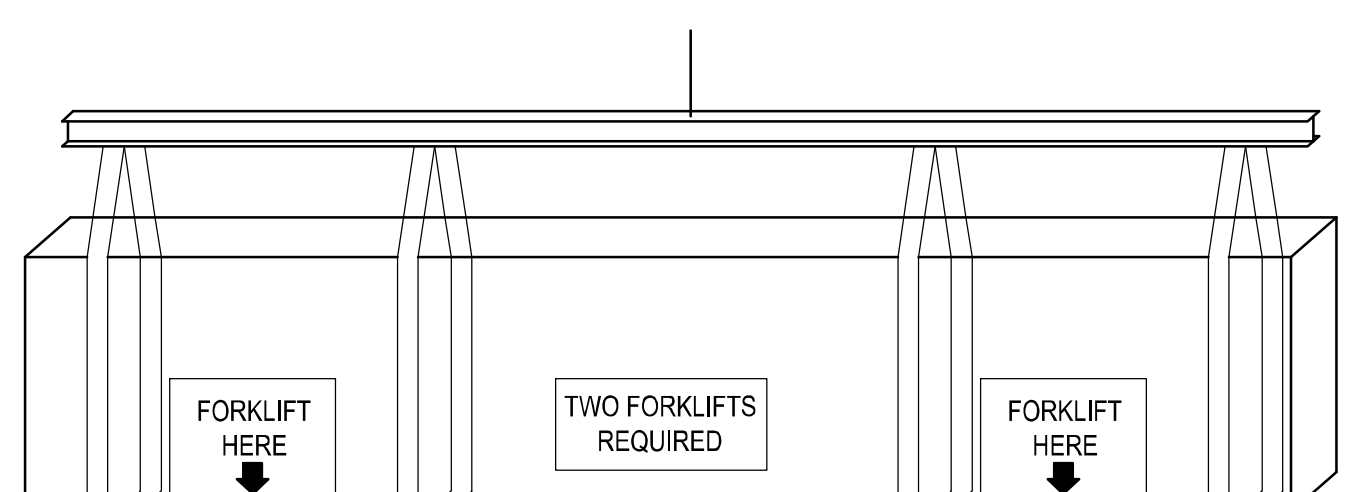

FIGURE 4
BUNDLES OVER 4,000 LBS AND LESS THAN 44'-0"

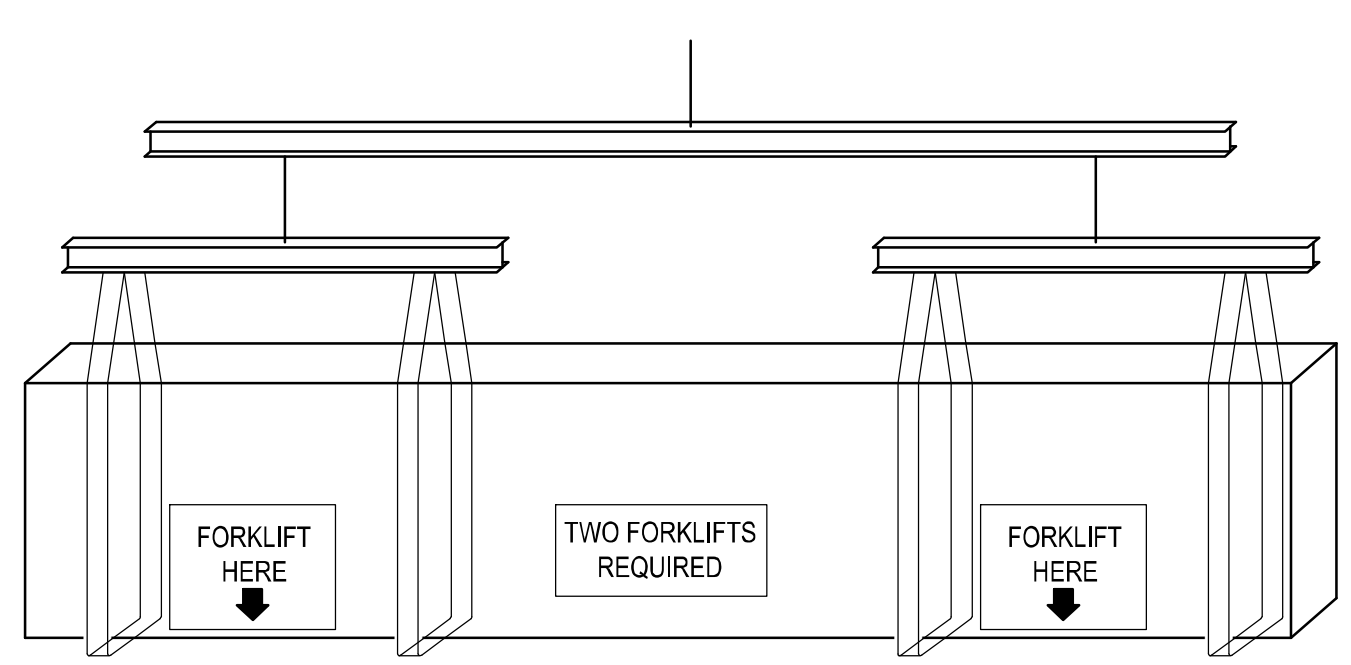

FIGURE 4
BUNDLES OVER 4,000 LBS AND MORE THAN 44'-0"

MANUALLY UNLOADING:
- ON SMALL PROJECTS UNLOADING OF THE PANELS MAY BE CARRIED OUT BY HAND.
  NOTE: SPECIAL CARE SHOULD BE TAKEN WHEN HANDLING. ALWAYS LIFT THE PANELS WHEN REMOVING FROM A BUNDLE, NEVER DRAG THEM.
- WARNING: TO PREVENT JOINT DAMAGE, NEVER LIFT THE PANEL FROM THE FLAT POSITION FROM THE OVERLAPPING RIB. LIFT PANELS FROM THE BOTTOM SKIN.
- IT IS IMPORTANT THAT WHENEVER A PANEL IS HANDLED, PICKED-UP, MOVED OR CARRIED IT SHOULD BE TURNED ON EDGE FIRST. DO NOT CARRY PANEL WHILE FLAT.
- IMPORTANT NOTE: ALL PERSONNEL DOING THESE PROCEDURES MUST WEAR AT ALL TIMES THE PROPER CLOTHING, PROTECTIVE EYE WEAR AND GLOVES.

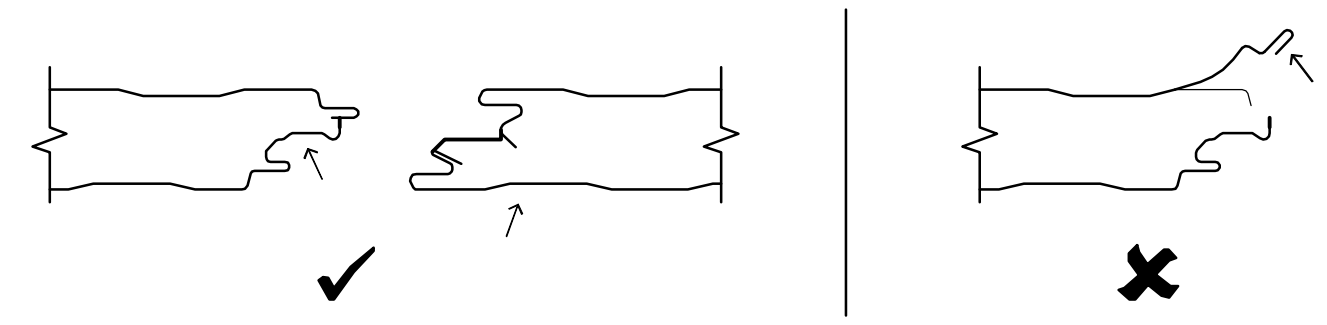

THE METAL BUILDING/PANEL SUPPLIER DOES NOT TAKE ANY RESPONSIBILITY FOR DAMAGE CAUSED FROM MISHANDLING OF PANELS. DAMAGED PANELS SHALL BE REPLACED OR CORRECTED TO APPROVAL OF THE ARCHITECT AND ANY COST INCURRED SHALL BE BORNE BY THE PARTIES RESPONSIBLE FOR THE DAMAGE.

JOBSITE STORAGE:

UPON ACCEPTANCE OF THE SHIPMENT, THE CUSTOMER IS RESPONSIBLE FOR PROPER HANDLING, STORAGE, AND SECURITY OF THE RECEIVED MATERIALS. THE MANUFACTURER IS NOT RESPONSIBLE FOR DAMAGE OR LOSS OF MATERIALS AT THE JOB SITE.

PANELS NOT REQUIRED FOR IMMEDIATE USE SHOULD BE:
- CAREFULLY UNLOAD AND PLACE DIRECTLY IN A PROTECTED STORAGE AREA ON A FIRM, LEVEL SURFACE CLEAR OF DEBRIS, PREFERABLY UNDER WATER PROOF COVER AND SLIT PLASTIC WRAP AT BASE TO ALLOW AIR FLOW, FOR NO LONGER THAN 30 DAYS.
- CUT / SLIT THE BOTTOM OF THE PLASTIC WRAP IN 1'-0" INCREMENTS AT 5'-0" O.C. ALONG THE LENGTH OF THE BUNDLES. A CONTINUOUS CUT / SLIT SHOULD BE MADE ALONG THE WIDTH OF THE BUNDLE.
- ELEVATE WITH WOOD BLOCKING, TO ALLOW AIR CIRCULATION UNDER THE BUNDLE, ON A FIRM, LEVEL SURFACE CLEAR OF DEBRIS, STANDING WATER, DIRECT SUN, AND DRIFTING SNOW.
- SEPARATE FLAT-LAID BUNDLES WITH THE STYRENE DUNNAGE PROVIDED WITH THE SHIPMENT.
- BUNDLES CAN BE STACKED, NO MORE THAN (2) BUNDLES HIGH.
- SLOPE AT A MINIMUM OF **1:12** FOR DRAINAGE OF MOISTURE FROM PANELS.
- INSPECTED DAILY FOR MOISTURE, INSURE NO SAGS ARE PRESENT. TRAPPED MOISTURE CAN DAMAGE THE PANEL FINISH AND VOID APPLICABLE FINISH WARRANTIES. IF PANEL BUNDLES CONTAIN MOISTURE OR SAGS, THE PANEL BUNDLE SHOULD BE DRIED AND RESTACKED. USE CARE IN RESTACKING TO AVOID DAMAGE TO PANELS.

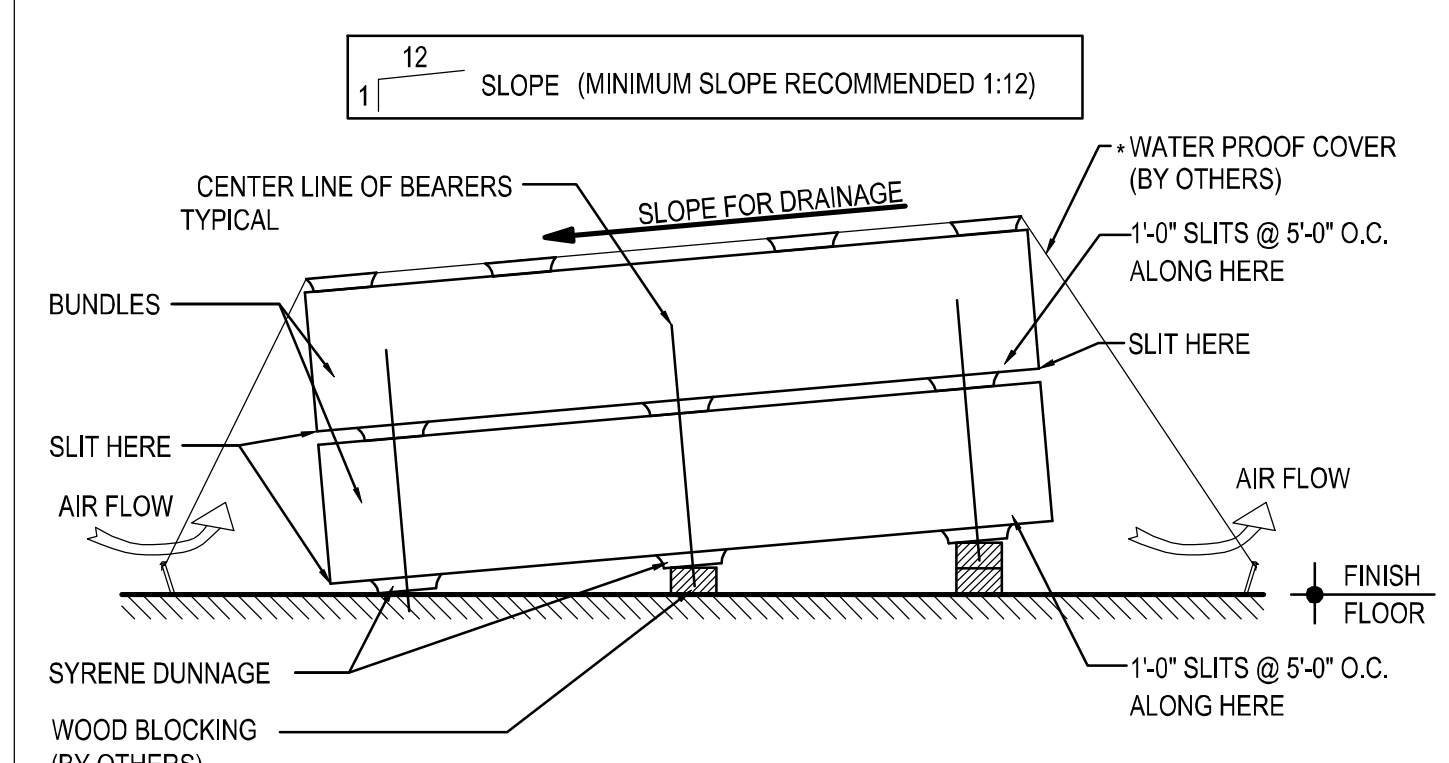

PANELS FOR IMMEDIATE USE:
IF THE PANELS ARE TO BE USED IMMEDIATELY, THE BUNDLES SHOULD BE PLACED AT PRE-PLANNED STRATEGIC LOCATIONS AROUND THE PERIMETER OF THE BUILDING, AS CLOSE AS POSSIBLE TO THE PLANNED WORK AREAS, TO AVOID UNDUE SITE MANEUVERING.

WHEN MOVING PANEL BUNDLES, EXTREME CAUTION SHOULD BE TAKEN TO PREVENT DAMAGE TO THE PANEL SURFACES AND EDGES.

WHEN HANDLING PANELS INDIVIDUALLY, THEY SHOULD BE CARRIED IN A VERTICAL, NOT FLAT POSITION. NEVER DRAG PANELS WHEN REMOVING THEM FROM BUNDLES.

(SEE "HANDLING PANELS AND COMPONENTS)

INSTALLATION TOOLS:

"READ BEFORE YOU START"

- SLIDING PANELS TOGETHER WILL SCUFF, DISCOLOR OR DAMAGE THE FINISH.
- IT IS IMPORTANT TO NOTE THAT, DUE TO THE HIDDEN FASTENER SIDE LAP CONNECTIONS OF THESE PANELS, EXTRA CARE SHOULD BE TAKEN WHEN HANDLING THESE COMPONENTS.
- THE FOLLOWING IS A LIST OF COMMON TOOL REQUIREMENTS. REFER TO "FIELD CUTTING" FOR PANEL CUTTING GUIDELINES.
- WEARING CLEAN GLOVES, HANDLING THE PANELS BY EDGES AND TAKING A LITTLE EXTRA CARE WILL PAY OFF BY PRODUCING A GOOD CLEAN FINISHED WALL.

COMMON TOOL REQUIREMENTS:

CIRCULAR SAW	POWER DRILL	CARPENTER'S SQUARE
RIVET GUN	LEVEL	CHALK LINE
TAPE MEASURE	CAULK GUN	SCREW GUN
POWER SHEARS	HAMMER DRILL	POWER NIBBLER

CAUTION: ANY METAL FILINGS OR BURRS SHOULD BE CLEANED OFF THE FACE OF THE PANELS AS SOON AS POSSIBLE TO PREVENT RUST FROM FORMING ON THE PAINT. (SEE "CLEANING PROCEDURES")

ALIGNMENT & SHIMMING
PRIOR TO INSTALLATION, WALL SECONDARY MEMBERS SHOULD BE CHECKED FOR OVERALL DIMENSIONS AND EVENNESS OF PLANE. THE WALL SECONDARY MEMBERS SHOULD ALSO BE CHECKED TO VERIFY THE WALL SYSTEM CAN BE INSTALLED WITHOUT INTERFERENCE. PRIOR TO INSTALLATION OF INSULATED PANEL, INSPECT EACH WALL FOR COMPONENT ALIGNMENT AND PLANE FLATNESS.

CHECK SUPPORT ALIGNMENT AGAINST THESE TOLERANCES:
< 8'-0" SPACING: +1/8", -0"
≥ 8'-0" SP[ACING: +1/4", -0"

(ARCHITECTURAL FLAT PANELS) < 4'-0" SPACING: +1/16", -0"

MISALIGNED SECONDARY STEEL MAY REQUIRE THE ERECTOR TO SHIM THE INSULATED WALL PANELS AT SOME LOCATIONS. SHIMS AND LABOR FOR INSTALLING SHIMS ARE BY OTHERS.

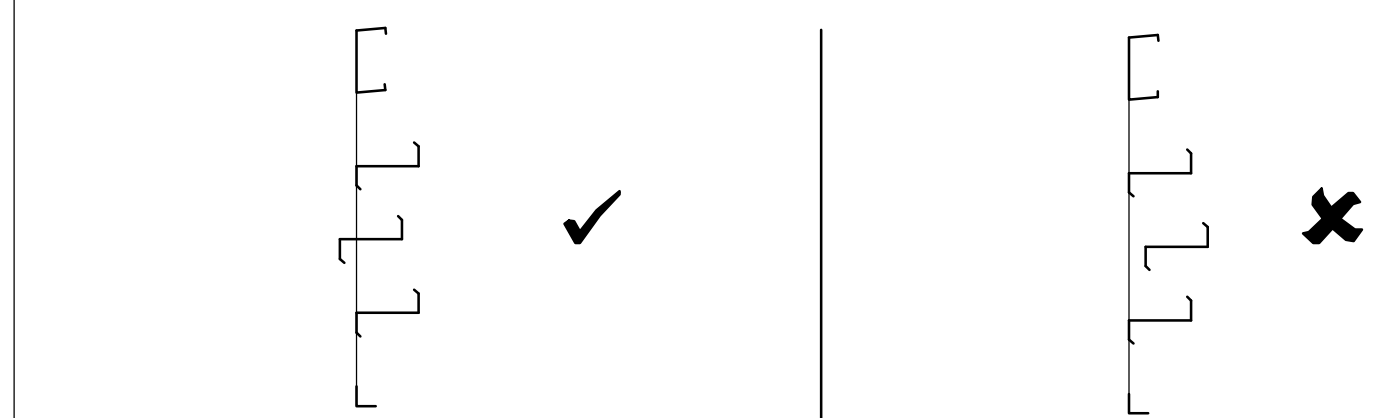

OUTWARD ALIGNMENT WITHIN TOLERANCE = ACCEPTABLE

INWARD ALIGNMENT = NOT ACCEPTABLE

FASTENERS:

INSULATED WALL PANEL FASTENERS VARY BASED ON LOCATION AND PANEL THICKNESS. THE FASTENERS LISTED BELOW ARE TYPICAL FASTENERS. ADDITIONAL FASTENERS, WHEN REQUIRED BY DESIGN, WILL BE INDICATED ELSE WHERE ON THE ERECTION DRAWING SET.

43L — SELF-DRILLING SCREW 1/4-14 x 1 1/4" TYPE 2

H1030 — SELF-DRILLING SCREW 1/4-14 x 1 1/4" TCP 3 W/ WASHER

H1050 — SELF-DRILLING SCREW 1/4-14 x 7/8" TCP 1 W/ WASHER

H1100 — 1/8" STAINLESS STEEL BLIND POP RIVET GRIP RANGE: 1/8" - 3/16"

17 — SELF-DRILLING SCREW 12-14 x 1" TCP 3 W/ WASHER

4 — SELF-DRILLING SCREW 1/4-14 x 7/8" TCP 1 W/ WASHER

14 — 1/8" STAINLESS STEEL BLIND POP RIVET GRIP RANGE: 1/8" - 3/16"

H1220 — SELF-DRILLING SCREW 12-14 x 1" TCP 3 SQUARE / PHILLIPS PANCAKE HEAD

2605ANC — LOCK RIVET, 9/32 BT DOME HEAD W/ WASHER

14A — 1/8" STAINLESS STEEL BLIND POP RIVET GRIP RANGE: 5/16" - 3/8"

16__PNC / 17__PNC
#14 X _ SDHH (SELF DRILLING HEX HEAD)

STRUCTURAL FASTENING AT PANEL HIDDEN JOINT

PANEL THICK.	HIDDEN FASTENER	(TEK 3) MARK#:	(TEK 5) MARK #:
2"	1/4 - 14 X 2 SDHH W/O WASHER	1616PNC	N/A
2 1/2" & 3"	1/4 - 14 X 3 SDHH W/O WASHER	1624PNC	1724PNC
4"	1/4 - 14 X 4 SDHH W/O WASHER	1632PNC	1732PNC

14__PNC
#14 X _ SDPH SELF DRILLING PANCAKE HEAD

STRUCTURAL FASTENER AT PANEL FACE

PANEL THICK.	THROUGH FASTENER	(TEK 3) MARK#:
2"	#14 X 3 SDPH	1424PNC
2 1/2" & 3"	#14 X 4 SDPH	1432PNC
4"	#14 X 5 SDPH	1440PNC

11__P999
#14 X _ SDHH (SELF DRILLING HEX HEAD)

STRUCTURAL FASTENING FOR THROUGH CONDITIONS

PANEL THICK.	THROUGH FASTENER	(TEK 3) MARK#:
2"	1/4 - 14 X 4 SDHH W/ WASHER	1132P999
2 1/2" & 3"	1/4 - 14 X 5 SDHH W/ WASHER	1140P999
4"	1/4 - 14 X 6 SDHH W/ WASHER	1148P999
5"	1/4 - 14 X 7 SDHH W/ WASHER	1156P999
6"	1/4 - 14 X 8 SDHH W/ WASHER	1164P999

4633GNC
4 HOLE PANEL JOINT WASHER

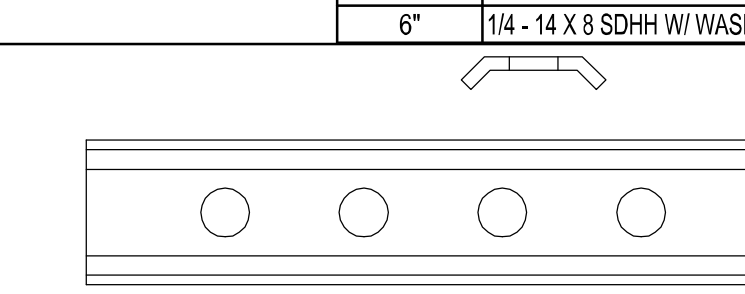

NOTES: THE USE OF A CENTER PUNCH TO SLIGHTLY DIMPLE THE PANEL FACE PRIOR TO INSTALLING THROUGH FASTENERS IS RECOMMENDED TO PREVENT "WALKING" OF THE FASTENERS. EXCESSIVE DAMAGE TO THE PANEL FINISH CAUSED DURING INSTALLATION MAY VOID THE PANEL FINISH WARRANTY.

PROJECT PREPERATION NOTES

INSULATED WALL PANELS
INITIAL GUIDELINES, UNLOADING, HANDLING PANELS & COMPONENTS, JOBSITE STORAGE, & REQ'D TOOLING FOR INSTALLATION

TRIM_21

ISSUE	DWN	CHK	ENG	PE	DATE
CONST. AB PLAN	NBS	EOP	CBM		7/24/2023
BUILDING DEPARTMENT REVIEW	MBS	DAN	CBM		7/31/2023

NUCOR BUILDING SYSTEMS
305 INDUSTRIAL PARKWAY, WATERLOO, IN 46793
PHONE: (260) 837-7891 FAX: (260) 837-7384
PO BOX 1006, 200 WHETSTONE RD, SWANSEA, SC 29160
PHONE: (803) 568-2100 FAX: (803) 568-2121
600 APACHE TRAIL, TERRELL, TX 75160
PHONE: (972) 524-5407 FAX: (972) 524-5417
1050 WATERY LANE, BRIGHAM CITY, UT 84302
PHONE: (435) 919-3100 FAX: (435) 919-3101

PROJECT NAME
WENDOVER FS #13 REPLACEMENT
WENDOVER, NV

CUSTOMER NAME
MICHAEL CLAY CORP
WINNEMUCCA, NV

SHEET TITLE

JOB NUMBER
U23G0555A

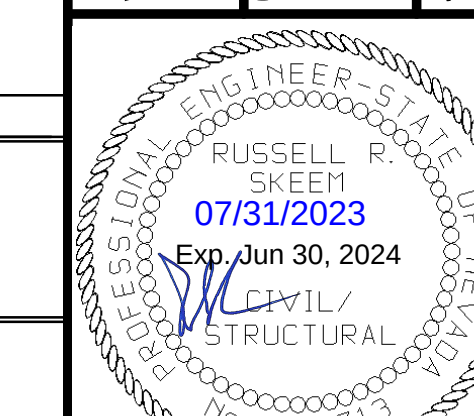

This seal pertains only to the materials designed and supplied by Nucor Building Systems, a divisions of Nucor Corporation. The drawings and the metal buildings which they represent are the product of Nucor Building Systems. The register professional engineer whose seal appears on these drawings is employed by Nucor Buildings Systems and does not serve as or represent the project engineer of record and shall not be construed as such.

SHEET
D15 of 20

INSTALLATION PROCEDURES:

NOTE: INSULATED PANELS, DUE TO THEIR JOINERY, DO NOT PROVIDE DIAPHRAGM STIFFNESS FOR THE BUILDING WALL TO RESIST LATERAL FORCES INCLUDING WIND. LATERAL BRACING IS TO BE PROVIDED BY CROSS BRACING SYSTEMS CONNECTED TO THE PRIMARY BUILDING FRAMING.

PRIOR TO PANEL INSTALLATION VERIFY:

BUILDING WALLS ARE PLUMB: INSURE BUILDING WALLS TO BE SHEETED ARE PLUMB AND THAT ANY CROSS-BRACING REQUIRED IS IN PLACE AND SNUG TO PREVENT WALL MOVEMENT DURING PANEL INSTALLATION. ALL SECONDARY MEMBERS ARE IN PLACE AND PLUMB.

SAG BRACING: IF SAG BRACING IS REQUIRED FOR YOUR JOB, THEN IT NEEDS TO BE INSTALLED PRIOR TO PANEL INSTALLATION. INSULATED PANELS ARE NOT DESIGNED TO CARRY THOSE LOADS.

WALL PLANE IS FREE OF OBSTRUCTIONS - SEE "INSTALLATION GUIDELINES"

PANEL LAYOUT - REVIEW CUT DIMENSIONS FOR INSULATED PANELS AT ERECTION DRAWING PANEL LAYOUTS AND BECOME FAMILIAR WITH STARTING AND ENDING PANEL REQUIREMENTS.

WALL OPENING LOCATIONS - LOCATIONS OF OPENINGS MAY NEED TO BE ADJUSTED SLIGHTLY (INCHES) DUE TO PANEL JOINERY. TYPICALLY, PANELS ABOVE AND BELOW OPENINGS ARE TO BE INSTALLED AS WORK PROGRESSES. IF POSSIBLE, KEEP SIDE PANEL JOINTS 6" AWAY FROM FRAMED OPENINGS AS A MINIMUM.

PERSONNEL WALK DOORS – INSTALL PRIOR TO PANEL INSTALLATION. NOTIFY YOUR CUSTOMER SERVICE COORDINATOR IF YOU FIND A POTENTIAL ERECTION PROBLEM.

ONCE ALL OF THE ABOVE ITEMS HAVE BEEN VERIFIED, BEGIN INSTALLATION PROCESS:

1. TO ENSURE A PROPER VAPOR BARRIER AND WATER TIGHTNESS, APPLY A 3\8" BEAD OF BUTYL TUBE CAULK (MK. H3151 TYP.) AT MALE EDGE OF THE PANEL IF CAULK IS NOT PRESENT. ALSO, APPLY A CONTINUOUS 3/8" BEAD OF BUTYL TUBE CAULK RUN AT ALL PERIMETER SUPPORT MEMBERS; BASE, EAVE, HEADER, SILL, AND HORIZONTAL TRANSITIONS. NOTE: THIS CAULK IS NOT REQUIRED AT MID-SPAN (INTERMEDIATE) MEMBERS.
2. OBTAIN FIRST PANEL, STARTING PANEL CUT DIMENSION WILL BE SUPPLIED ON ERECTION DRAWINGS. REFER TO "FIELD CUTTING".
3. PLACE THE FIRST PANEL IN THE LOCATION AS DETAILED ON THE SHEETING DRAWINGS WITH THE BASE OF THE FIRST PANEL IN THE PROPER POSITION, PLUMB THE PANEL AND SECURE IN PLACE.
4. PREPARE ADJACENT PANEL EDGE (VERIFY/ADD BUTYL CAULK, ETC.) PLACE INTO POSITION.
5. MAINTAIN AN EVEN AND UNIFORM GAP AT THE PANEL SIDE JOINT (0.125" MAX), THEN FASTEN PANEL INTO POSITION USING ALL REQUIRED SIDE JOINT FASTENERS. REFER TO "WALL OPENINGS" FOR SPECIFIC INFORMATION AT OPENINGS.
6. REPEAT THE INSTALLATION PROCESS OCCASIONALLY CHECKING FOR PLUMB. IF ANY MINOR 'OUT-OF-PLUMB' IS DETECTED, TAKE CORRECTIVE ACTION IN MINOR STEPS WITH SUBSEQUENT PANELS TO BRING THE SHEETING PROCESS BACK TO PLUMB.

INSTALLATION GUIDELINES:

INSULATED PANELS PROVIDE INSULATION PERFORMANCE SUPERIOR TO CONVENTIONAL METAL WALL PANELS WITH FIELD ASSEMBLED INSULATION SYSTEMS. THE FULL ENERGY SAVINGS POTENTIAL CAN ONLY BE REALIZED WHEN THE INSULATED PANELS ARE INSTALLED WITH CAREFUL ATTENTION TO THE DETAILS AFFECTING THE QUALITY OF AIR AND MOISTURE SEAL.

TO ENSURE A PROPER VAPOR BARRIER AND WATER TIGHTNESS 3/8" BEAD OF BUTYL CAULK IS REQUIRED AT LOCATIONS INDICATED ON THE ERECTION DRAWINGS. SIDELAP CAULK MAY BE FACTORY OR FIELD APPLIED. IT IS HOWEVER, THE INSTALLERS RESPONSIBILITY TO FIELD APPLY CONTINUOUS BUTYL CAULK AT AREAS WITH VOIDS OR MISSING CAULK. CONTINUITY, SIZE AND PROPER BEAD PLACEMENT ARE CRITICAL IN OBTAINING A SATISFACTORY SEAL AT EACH PANEL EDGE. DETAILS FOR PLACEMENT OF CAULK AT PANEL EDGES SHOULD BE REVIEWED IN ADVANCE. APPLICATION OF CAULK SHOULD BE CONTINUOUS.

SPECIAL CARE IN HANDLING IS REQUIRED TO PREVENT DAMAGE OR CONTAMINATION BY FIELD DEBRIS WITHIN THE PANEL SIDE JOINT. ALL SECONDARY SUPPORT STEEL SHOULD BE IN PLACE FOR CONTINUOUS ATTACHMENT OF PANELS ACROSS THE SURFACE OF PRIMARY FRAMING MEMBERS, INCLUDING OUTER EXTREMES OF CORNERS, OPENINGS, GABLES, ETC.

PANEL ENGAGEMENT AT SIDE JOINTS SHOULD BE AS INDICATED ON DETAILS.

PRIOR TO INSTALLATION OF INSULATED PANEL, INSPECT EACH WALL FOR COMPONENT ALIGNMENT AND PLANE FLATNESS. WALL COMPONENTS SHOULD NOT VARY MORE THAT 1/8" OVER THE ENTIRE WALL SURFACE, INCLUDING FASTENER HEADS AND OTHER OBSTRUCTIONS THAT WOULD INTERFERE WITH CONTINUOUS BEARING OF THE INSULATED PANEL LINER FACE.

ALIGNMENT AT TRANSITION AREAS, SUCH AS CORNERS AND EAVE, SHALL BE WITHIN 1/8" OF THE THEORETICAL PLANE TO ACCOMMODATE CORNER PANELS AND FORMED FLASHING.

MISALIGNED SECONDARY STEEL MAY REQUIRE THE ERECTOR TO SHIM THE INSULATED WALL PANELS AT SOME LOCATIONS. SHIMS AND LABOR FOR INSTALLING SHIMS ARE NOT BY NBG.

DO NOT OVERDRIVE FASTENERS: OVERDRIVING FASTENERS CAN CAUSE DAMAGE AND DISTORTION OF THE PANEL FACE.

DO NOT SKIP ATTACHMENTS AT SECONDARY SUPPORT MEMBERS: PANELS MUST BE ATTACHED AT EACH GIRT LINE IN PROGRESSION. SECURING PANELS AT TOP AND BOTTOM ONLY CAN CAUSE PANELS TO BOW AND IT MIGHT BE IMPOSSIBLE FOR THEM TO RETURN TO THEIR NORMAL POSITION.

WEATHER TIGHTNESS REQUIREMENTS

TO PREVENT CONDENSATION ISSUES CARE MUST BE TAKEN BY THE INSULATED PANEL INSTALLER TO ENSURE PROPER SEALING OF THE BUILDING.

NOTE THE FOLLOWING:

- ALL MATERIALS MUST BE INSTALLED AS SHOWN ON THE PROVIDED ERECTION DETAILS.
- ALL PERIMETER CAULKING AND BUTYL SEALANT APPLICATIONS MUST BE INSTALLED AS AS SHOWN ON THE ERECTION DETAILS.
- CONTINUOUS CAULK AND TAPE MASTIC APPLICATIONS (FACTORY OR FIELD) MUST BE CAREFULLY INSPECTED AND ANY VOIDS FOUND MUST BE FIELD APPLIED.
- GAPS, VOIDS OR AIR SPACE CREATED AT PANEL TO PANEL TRANSITIONS; AS AT RAKE, LOW EAVE, RIDGE, HIGH SIDE EAVE, ROOF TO WALL OR CORNERS MUST BE FIELD FILLED WITH FOAM SPRAY IN PLACE INSULATION (BY OTHERS).

NBG WILL NOT BE RESPONSIBLE FOR ANY CONDENSATION ISSUES THAT MAY OCCUR DUE TO IMPROPER INSTALLATION.

IF THE ERECTOR IS NOT EXPERIENCED WITH THE INSULATED PANELS SUPPLIED BY NBG, IT IS STRONGLY RECOMMENDED THAT A FIELD TECHNICIAN BE ON SITE BEFORE BEGINNING PANEL INSTALLATION. PANEL INSTALLATION. CONTACT YOUR PROJECT COORDINATOR TO REQUEST AND SCHEDULE A FIELD TECHNICIAN.

FIELD CUTTING:

SOME FIELD CUTTING OF PANELS AND FLASHING WILL BE REQUIRED. IT IS THE WORKERS RESPONSIBILITY TO MAKE SURE ALL SAFETY PRECAUTIONS ARE FOLLOWED. SOME SAFETY PRECAUTIONS INCLUDE, BUT ARE NOT LIMITED TO; EYE PROTECTION, ADEQUATE VENTILATION, NO SMOKING AND AVOID EXPOSING PANELS TO HIGH HEAT.

PANELS ARE TO BE CUT ONE METAL SIDE AT A TIME AND THE INSULATION CAN BE REMOVED WITH A SERRATED KNIFE. A CIRCULAR SAW WITH AN APPROPRIATE BLADE SET TO CUT THROUGH THE METAL SKIN ONLY CAN BE USED. CIRCULAR SAWS WITH ABRASIVE BLADES ARE NOT ACCEPTABLE. BE SURE TO CUT COMPLETELY THROUGH THE METAL SKIN AT THE PANEL SIDE JOINTS. A CIRCULAR SAW WITH A **PROPER CARBIDE BLADE** MAY BE USED. **CHECK THE SAW BLADE MANUFACTUER'S SPECIFICATIONS FOR PROPER APPLICATION.**

RECOMMENDED CUTTING TOOLS INCLUDE:

(1) CIRCULAR SAW
(2) PANEL NIBBLER
(3) PANEL SAW
(4) SERRATED KNIFE
(5) BLADE OF A CARPENTER'S HAND SAW

IMP CUTTING PROCEDURES:

- MEASURE THE AREA TO CUT & MARK A LINE ON PANEL SURFACE (DO NOT USE GRAPHITE TO MARK PANEL).
- USE ADHESIVE TAPE ON BOTH SIDES OF THE CUTTING LINE TO PROTECT PANEL SURFACE.
- CONFIRM MEASUREMENT, AND PROCEED WITH CUTTING OPERATION.
- ALWAYS PROMPTLY CLEAN PANEL SURFACES TO REMOVE ANY METAL DUST OR FILINGS FROM CUTTING OPERATIONS.
- IF NECESSARY TURN PANEL OVER AND REPEAT STEPS ABOVE ON OPPOSITE SIDE.
- FILE OR SAND OFF ANY BURRS ON THE CUT EDGE OF THE PANEL. THE PANEL WILL THEN BE READY FOR INSTALLMENT. THE INSTALLER MUST CONSIDER THE APPLICATION OF THE CONTINUOUS BEAD OF SEALANT, & IF NECESSARY, THE CUTTING OF THERMAL BREAKS PRIOR TO INSTALLATION; SUCH TASKS SHALL BE DONE ON THE GROUND.
- FIELD-CUT EDGES SHOULD ALWAYS BE COVERED WITH TRIMS.

THE PANEL/BLDG MANUFACTURER **WILL NOT** BE RESPONSIBLE FOR DAMAGE TO PANELS CAUSED BY IMPROPER CUTTING METHODS.

- **NEVER** USE A RECIPROCATING SAW TO CUT INSULATED PANELS. RECIPROCATING SAWS CAN CAUSE STRUCTURAL DAMAGE TO THE INSULATED PANELS BY DELAMINATING THE PANEL FACE METAL FROM THE FOAM CORE MATERIAL.
- **NEVER** USE ANY TYPE OF TORCH TO CUT INSULATED PANEL.
- **NEVER** SUBJECT AN INSULATED PANEL TO THE HEAT OF A TORCH EVEN WHEN CUTTING NEARBY STEEL. HIGH HEAT WILL DAMAGE THE PANEL FINISH AND CAN CAUSE THE FOAM CORE TO PRODUCE FUMES WHICH MAY BE IRRITATING TO SOME INDIVIDUALS.
- **NEVER** BURN REMNANTS, DISPOSE OF INSULATED PANEL REMNANTS BY DEPOSITING IN PROPER GARBAGE FACILITIES.

ACCESSORIES:

- TRIMS LENGTHS SUPPLIED WILL VARY AND MAY REQUIRE SOME FIELD CUTTING.
- TRIM COLOR AVAILABILITY MATCHES PANEL COLOR AVAILABILITY.

TRIM ATTACHMENT:

TRIMS ARE FASTENED WITH BLIND RIVETS OR STITCH SCREWS, PAINTED TO MATCH TRIM COLOR. REFER TO THE ERECTION DETAILS AND THE ERECTION DRAWINGS FOR LOCATIONS AND FASTENING SPACING.

THERMAL WINDOW:

DUE TO THE ISOLATIVE PROPERTIES AND CONNECTION REQUIREMENTS OF THE WALL SYSTEM, THERMAL BREAK WINDOWS ARE RECOMMENDED FOR USE WITH INSULATED WALL PANELS.

SURFACE CLEANING PROCEDURES:

GENERAL:

DIRT, OIL, GREASE, FINGERPRINTS OR ANY OTHER TYPE ON CONTAMINATE MUST BE COMPLETELY REMOVED WHEN INSTALLATION IS COMPLETE IN ORDER TO MAXIMIZE COATING PERFORMANCE.

STEEL FILINGS FROM ADJACENT WORK MAY BECOME EMBEDDED IN THE PAINT SURFACE. THESE FILINGS WILL RUST AND FORM UNSIGHTLY RED SPOTS ON THE PAINTED SURFACE THAT CAN BECOME LARGER THAN THE ORIGINAL FILING. WHEN USING SAWS, DRILLS OR CUTTING DISCS, PROTECT THE PAINTED SURFACED WITH A NON-FLAMMABLE COVER AND REMOVE OR COVER ADJACENT OR NEARBY PANELS IF POSSIBLE.

BRUSH ANY FILINGS OF STEEL OFF THE PAINTED SURFACE. EMBEDDED FILINGS SHOULD BE REMOVED MECHANICALLY. CARE SHOULD BE TAKEN BY WORKMEN TO AVOID STEPPING ON OR EXERTING PRESSURE AGAINST ANY STEEL FILINGS WHICH MAY BECOME EMBEDDED IN THE PAINTED SURFACE.

THINGS TO REMEMBER WHEN CLEANING:

USE ONLY MILD DETERGENTS (NO LEMON, ALCOHOL OR AMMONIA INGREDIENTS)

USE ONLY SOFT BRISTLE BRUSHES (NO SCRUB TYPE OR WIRE BRISTLES)

USE ONLY LUKEWARM WATER (NO HOT WATER)

LIGHT OR PERIODIC CLEANING MAY BE ACCOMPLISHED ON A REGULAR BASIS BY WASHING WITH PLAIN WATER USING A STANDARD GARDEN HOSE OR LOW PRESSURE SPRAYER IS USUALLY SUFFICIENT TO REMOVE MOST CONTAMINATION.

CAULKING COMPOUNDS, OIL, GREASE, TARS, WAX AND SIMILAR SUBSTANCES CAN BE REMOVED BY WIPING WITH A CLOTH SOAKED IN MINERAL SPIRITS. WIPE ONLY CONTAMINATED AREAS AND FOLLOW WITH DETERGENT AND THOROUGHLY CLEAN WITH WATER.

SURFACE REPAIR PROCEDURES:

IF "TOUCH UP" PAINT IS REQUIRED CONTACT YOUR PROJECTS CUSTOMER SERVICE COORDINATOR.

PRECAUTIONS:

PROTECT EYES, FACE, AND HANDS FROM DIRECT CONTACT WITH TOUCH-UP PAINT AND/OR SOLVENTS. PROVIDE GOOD VENTILATION IN WORK AREA. ENFORCE NO SMOKING. REMOVE ALL SOURCES OF IGNITION. THESE COATINGS AND SOLVENTS ARE FLAMMABLE.

1. LIGHTLY SAND OR FEATHER EDGES OF DEEP SCRATCHES USING #400 GRIT SAND PAPER
2. WIPE SCRATCHES AND ADJACENT AREAS USING A LINT FREE CLOTH DAMPENED IN MINERAL SPIRITS.
3. ALLOW AREA TO DRY THOROUGHLY BEFORE APPLYING TOUCH-UP PAINT.
4. SHAKE / STIR PAINT TO MIX THOROUGHLY BEFORE APPLYING.
5. CHECK TOUCH-UP PAINT FOR CORRECT MATCH BEFORE APPLYING.
6. APPLY THIN LAYER OF TOUCH-UP PAINT TO DAMAGED AREA. REPEAT LAYERS AS REQUIRED.

PERIMETER CAULKING:

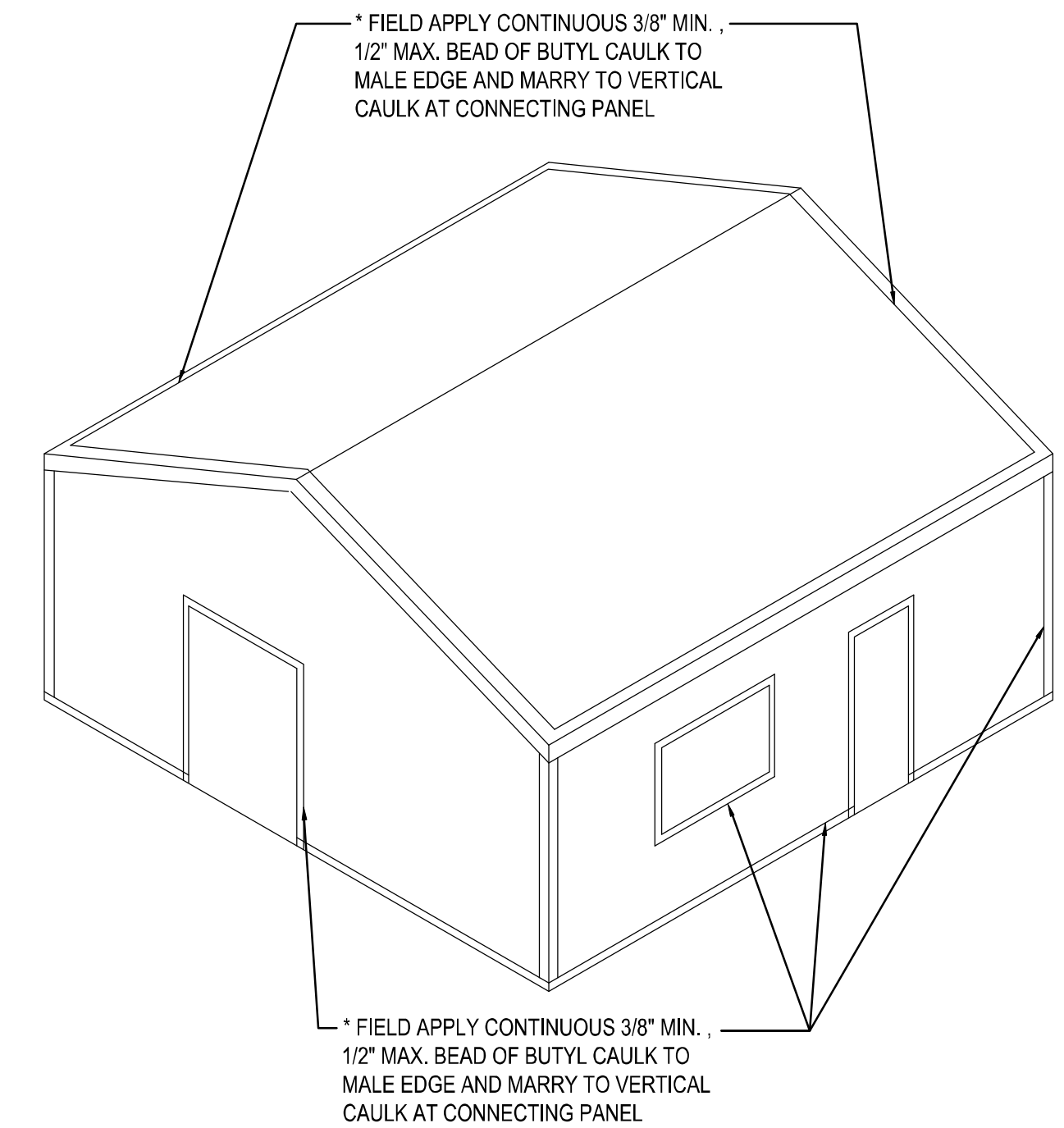

PERIMETER CAULKING IS A CRITICAL PART OF THE PANEL INSTALLATION. NOT INSTALLING THE PERIMETER CAULKING WILL LEAD TO AIR LEAKS, WHICH WILL LEAD TO CONDENSATION AND / OR FROST. REFERENCE THE DETAILS AND THE ERECTION MANUAL FOR PROPER CAULKING PLACEMENT.

FIELD INSTALLED INSULATION NOTE

IT IS THE RESPONSIBILITY OF THE ERECTOR TO FIELD FILL ALL AIR VOIDS WITH INSULATION. UNINSULATED AREAS WILL CAUSE HOT AND COLD SPOTS THAT CAN CAUSE CONDENSATION AND/OR FROST. THESE VOIDS COMMONLY HAPPEN AROUND THE PERIMETER OF THE BUILDING. FAILURE TO DO SO WILL CAUSE FUTURE PROBLEMS.

PROJECT INSTALLATION NOTES AND GUIDELINES

INSULATED WALL PANEL
INSTALLATION PROCEDURES & GUIDELINES,WEATHER TIGHTNESS REQUIREMENTS, FIELD CUTTING & ACCESSORY INFO,& SURFACE, CLEANING/REPAIR INFORMATION.

TRIM_22

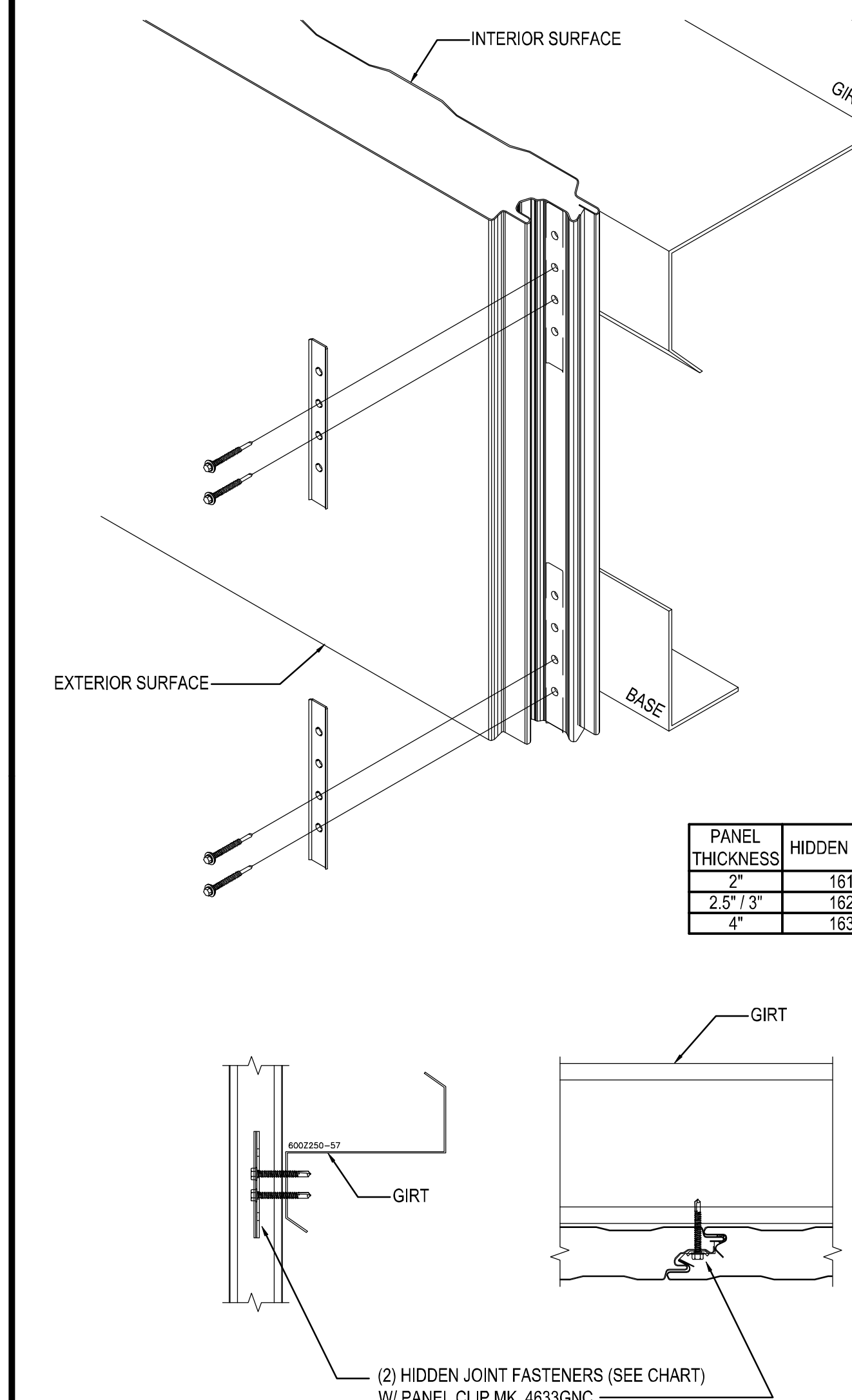

PANEL THICKNESS	HIDDEN FASTENER
2"	1616PNC
2.5" / 3"	1624PNC
4"	1632PNC

PANEL ATTACHMENT DETAIL

WALL PANEL ATTACHMENT AT COLD FORM SECONDARY

TRIM_23

ISSUE	DWN	CHK	ENG	PE	DATE
CONST. AB PLAN	NBS	EOP	CBM		7/24/2023
BUILDING DEPARTMENT REVIEW	MBS	DAN	CBM		7/31/2023

NUCOR BUILDING SYSTEMS
305 INDUSTRIAL PARKWAY, WATERLOO, IN 46793
PHONE: (260) 837-7891 FAX: (260) 837-7384
PO BOX 1006, 200 WHETSTONE RD, SWANSEA, SC 29160
PHONE: (803) 568-2100 FAX: (803) 568-2121
600 APACHE TRAIL, TERRELL, TX 75160
PHONE: (972) 524-5407 FAX: (972) 524-5417
1050 WATERY LANE, BRIGHAM CITY, UT 84302
PHONE: (435) 919-3100 FAX: (435) 919-3101

PROJECT NAME
WENDOVER FS #13 REPLACEMENT
WENDOVER, NV

CUSTOMER NAME
MICHAEL CLAY CORP
WINNEMUCCA, NV

JOB NUMBER
U23G0555A

SHEET TITLE

PROFESSIONAL ENGINEER - STATE OF NEVADA
RUSSELL R. SKEEM
07/31/2023
Exp. Jun 30, 2024
CIVIL/STRUCTURAL
No. 016713

This seal pertains only to the materials designed and supplied by Nucor Building Systems, a division of Nucor Corporation. The drawings and the metal buildings which they represent are the product of Nucor Building Systems. The register professional engineer whose seal appears on these drawings is employed by Nucor Buildings Systems and does not serve as or represent the project engineer of record and shall not be construed as such.

SHEET
D16 of 20

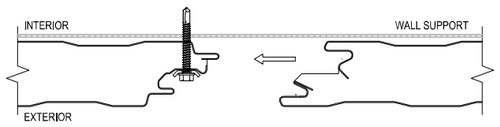

CLIP AND FASTENER ASSEMBLY

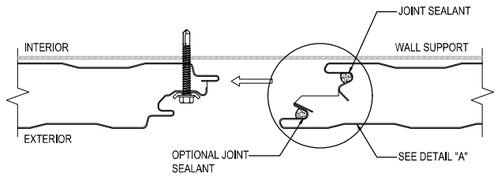

JOINT SEALANT APPLICATION

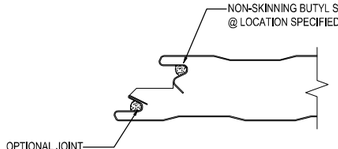

DETAIL A

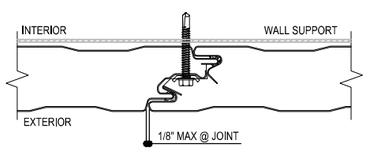

PANEL JOINT DETAIL

WALL PANEL JOINT

TRIM_24

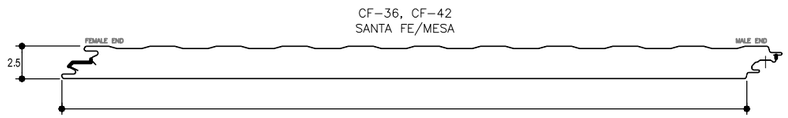

PANEL TYPE	SANTA FE	
CORE MATERIAL	POLYURETHANE	
CORE THICKNESS	2.5"	
	EXTERIOR FACE	INTERIOR FACE
GAUGE	24	26
MATERIAL	G-90 GALV. STEEL	G-90 GALV. STEEL
FINISH	PVDF	POLYESTER
COLOR	DESERT SAND/SURREY BEIGE	IGLOO WHITE
PATTERN	EMBOSSED	EMBOSSED

TRIM_25

PANEL THICKNESS	HIDDEN FASTENER
2"	1616PNC
2.5" / 3"	1624PNC
4"	1632PNC

ERECTOR NOTE:
SEE CORRESPONDING ROOF SHEETING DETAIL FOR ROOF PANEL & TRIM INFORMATION.

FIELD CUT WALL PANELS ALONG ROOF LINE AS REQUIRED

APPLY A CONTINUOUS BEAD OF BUTYL CAULK MK. H3151 AROUND THE PERIMETER SUPPORT MEMBERS AND THEN MARRY HORIZONTAL CAULK TO PANEL CAULK

ROOF ANGLE MAR01 W/ (1) PANCAKE FASTENER MK. 12A AT EACH SUPPORT

(2) HIDDEN JOINT FASTENERS (SEE CHART) W/ PANEL CLIP MK. 4633GNC

FIELD OR FACTORY APPLIED BUTYL CAULK AT VERTICAL JOINT (CONTINUOUS 3/8" BEAD)

PURLIN

INSULATED WALL PANEL AT RAKE

INSULATED WALL PANELS

TRIM_27

NOTE: UNLESS BUILDING PANEL LAYOUT PROHIBITS, THE ENDWALL PANELS WILL EXTEND PAST THE CORNER STEEL / GIRT LINE BY THE THICKNESS OF THE SIDEWALL PANELS.THIS IS TO ALLOW FOR A FULLY CLOSED CORNER.

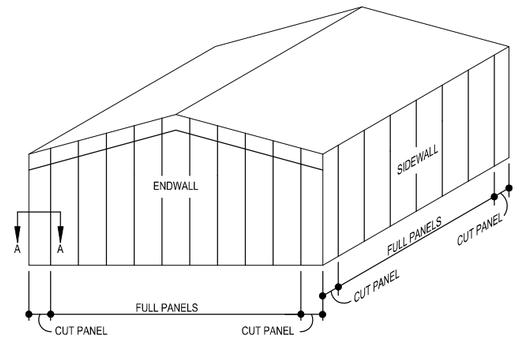

OTHER THREE CORNERS ARE SIMILAR

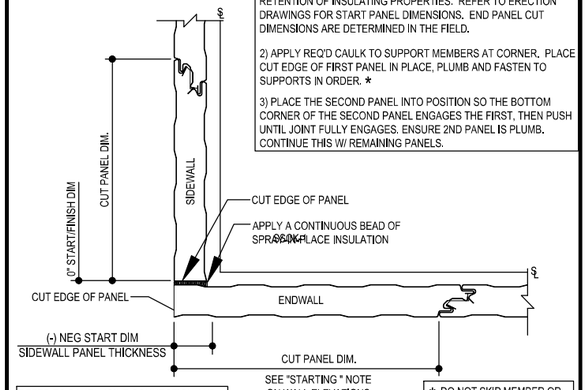

SECTION AA

PANEL INSTALLATION GUIDELINE STEPS:

1) FIELD CUT CORNER PANELS TO CREATE A CLOSED CORNER FOR RETENTION OF INSULATING PROPERTIES. REFER TO ERECTION DRAWINGS FOR START PANEL DIMENSIONS. END PANEL CUT DIMENSIONS ARE DETERMINED IN THE FIELD.

2) APPLY REQ'D CAULK TO SUPPORT MEMBERS AT CORNER. PLACE CUT EDGE OF FIRST PANEL IN PLACE, PLUMB AND FASTEN TO SUPPORTS IN ORDER. *

3) PLACE THE SECOND PANEL INTO POSITION SO THE BOTTOM CORNER OF THE SECOND PANEL ENGAGES THE FIRST, THEN PUSH UNTIL JOINT FULLY ENGAGES. ENSURE 2ND PANEL IS PLUMB. CONTINUE THIS W/ REMAINING PANELS.

REFER TO PANEL JOINT CONNECTION AND CORNER CONNECTION DETAILS FOR PANEL ATTACHMENT INFORMATION

* DO NOT SKIP MEMBER OR ATTACH PANEL AT TOP THEN BOTTOM. BOWING OF PANELS MAY OCCUR IF THIS IS DONE.

WALL CORNER LAYOUT

TRIM_28

PANEL THICKNESS	HIDDEN FASTENER
2"	1616PNC
2.5" / 3"	1624PNC
4"	1632PNC

ERECTOR NOTE:
SEE CORRESPONDING ROOF SHEETING DETAIL FOR ROOF PANEL & TRIM INFORMATION.
SEE ALSO FOR TOP OF PANEL PLACEMENT

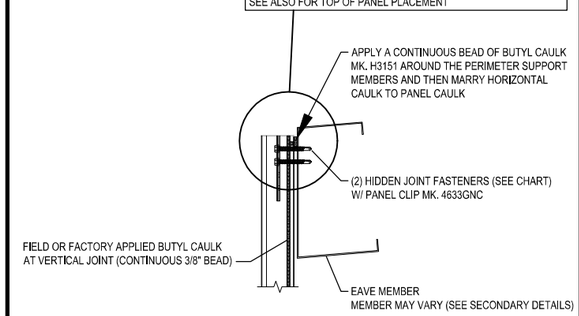

INSULATED WALL PANEL AT LOW EAVE

INSULATED WALL PANELS

TRIM_26

PANEL THICKNESS	HIDDEN FASTENER
2"	1616PNC
2.5" / 3"	1624PNC
4"	1632PNC

OVERALL "GAP" BETWEEN PANELS
2" / 2.5" WALL PANELS = 7/16"
3" WALL PANELS = 1/2"
4" WALL PANELS = 5/8"

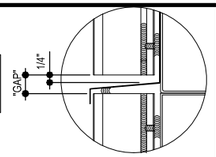

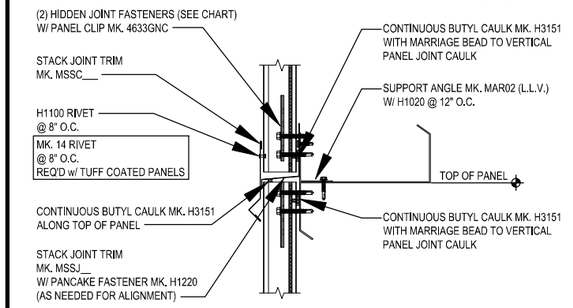

STACKED JOINT

INSULATED WALL PANEL STACK JOINT TRIM

TRIM_29

ISSUE	DWN	CHK	LEAD ENG	PE	DATE
CONST. AB PLAN	NBS	EOP	CBM		7/24/2023
BUILDING DEPARTMENT REVIEW	WBS	DAN	CBM		7/31/2023

NUCOR BUILDING SYSTEMS
300 INDUSTRIAL PARKWAY, WATERLOO, IN 46793
PHONE: (260) 837-7891 FAX: (260) 837-7384
PO BOX 1006, 200 WHETSTONE RD, SWANSEA, SC 29160
PHONE: (803) 568-2100 FAX: (803) 568-2121
600 APACHE TRAIL, TERRELL, TX 75160
PHONE: (972) 524-9411 FAX: (972) 524-9417
1050 WATERY LANE, BRIGHAM CITY, UT 84302
PHONE: (435) 919-3100 FAX: (435) 919-3101

PROJECT NAME: WENDOVER FS #13 REPLACEMENT
WENDOVER, NV

CUSTOMER NAME: MICHAEL CLAY CORP
WINNEMUCCA, NV

JOB NUMBER: U23G0555A

SHEET TITLE

RUSSELL R. SKEEM
PROFESSIONAL ENGINEER - STATE OF UTAH
07/31/2023
Exp. Jun 30, 2024
CIVIL/STRUCTURAL
NO. 015713

This set of plans and/or specifications is the property of Nucor Building Systems, a division of Nucor Corporation. The drawings and the information shown on the drawings are the product of Nucor Building Systems' employee engineer and other drawings is employed by Nucor Buildings Systems and does not serve as representation that any part of record and shall not be construed as such.

SHEET
D17 of 20

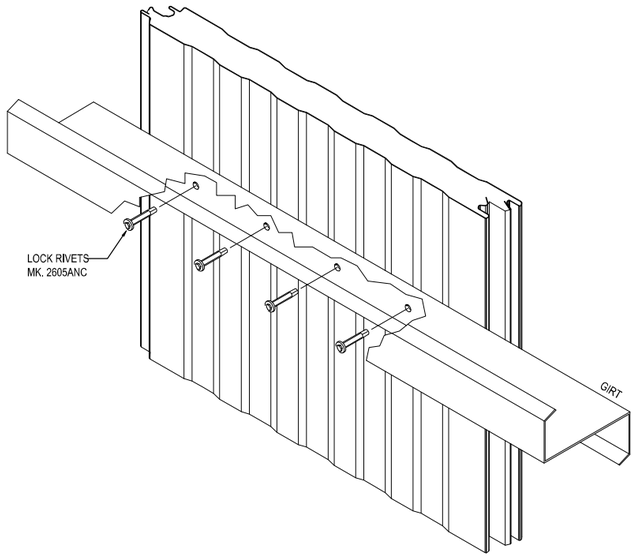

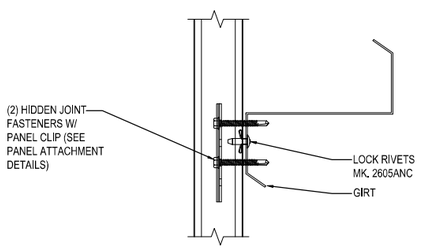

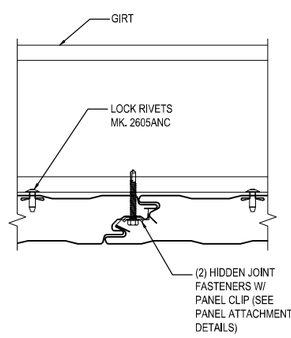

BACK FASTENING DETAILS

WALL PANEL BACK FASTENING AT COLD FORM SECONDARY

TRIM_30

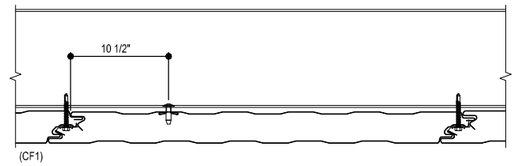

COLD FORM FASTENING PATTERN 1
SIDE JOINT FASTENING AND (1) LOCK RIVET MK. 2605ANC

INSTALL LOCK RIVETS THROUGH GIRT
FLANGE INTO MESA WHERE THE SKIN
MAKES CONTACT WITH THE STEEL

CF1

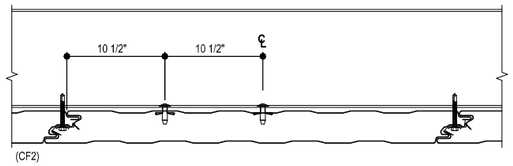

COLD FORM FASTENING PATTERN 2
SIDE JOINT FASTENING AND (2) LOCK RIVETS MK. 2605ANC

INSTALL LOCK RIVETS THROUGH GIRT
FLANGE INTO MESA WHERE THE SKIN
MAKES CONTACT WITH THE STEEL

CF2

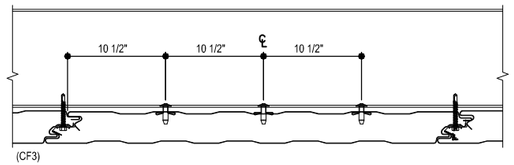

COLD FORM FASTENING PATTERN 3
SIDE JOINT FASTENING WITH (3) LOCK RIVETS MK. 2605ANC

INSTALL LOCK RIVETS THROUGH GIRT
FLANGE INTO MESA WHERE THE SKIN
MAKES CONTACT WITH THE STEEL

CF3

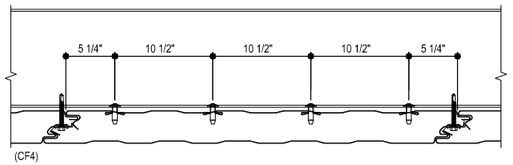

COLD FORM FASTENING PATTERN 4
SIDE JOINT FASTENING AND BACK FASTENING WITH (4) LOCK RIVETS MK. 2605ANC

INSTALL LOCK RIVETS THROUGH GIRT
FLANGE INTO MESA WHERE THE SKIN
MAKES CONTACT WITH THE STEEL

CF4

COLD FORM BACK FASTENING PATTERNS

INSULATED METAL PANEL BACK FASTENING PATTERNS

TRIM_31

ISSUE	DWN	CHK	ENG	PE	DATE
CONST. AB PLAN	NBS	EOP	CBM		7/24/2023
BUILDING DEPARTMENT REVIEW	WBS	DAN	CBM		7/31/2023

NUCOR BUILDING SYSTEMS
300 INDUSTRIAL PARKWAY, WATERLOO, IN 46793
PHONE: (260) 837-7891 FAX: (260) 837-7384
PO BOX 1006, 200 WHETSTONE RD, SWANSEA, SC 29160
PHONE: (803) 568-2100 FAX: (803) 568-2121
600 APACHE TRAIL, TERRELL, TX 75160
PHONE: (972) 551-4400 FAX: (972) 551-4417
1050 WATERY LANE, BRIGHAM CITY, UT 84302
PHONE: (435) 919-3100 FAX: (435) 919-3101

PROJECT NAME
WENDOVER FS #13 REPLACEMENT
WENDOVER, NV

CUSTOMER NAME
MICHAEL CLAY CORP
WINNEMUCCA, NV

JOB NUMBER
U23G0555A

SHEET TITLE

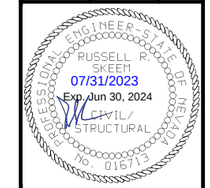

This seal pertains only to the materials designed, detailed, and supplied by Nucor Building Systems, a division of Nucor Corporation. The drawings and the design shown thereon represent work that is the product of Nucor Building Systems' engineering staff. Nucor Building Systems employs registered professional engineers licensed in various states. Unless drawings is employed by Nucor Buildings Systems and does not serve as a certification by the named engineer of record and shall not be construed as such.

SHEET
D18 of 20

PANEL THICKNESS	HIDDEN FASTENER
2"	1616PNC
2.5" / 3"	1624PNC
4"	1632PNC

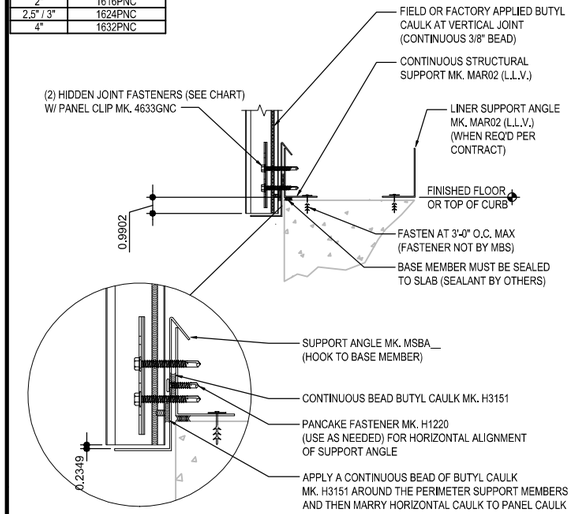

PANEL THICKNESS	BASE TRIM
2"	F5076
2.5"	F5077
3"	F5079
4"	F5080

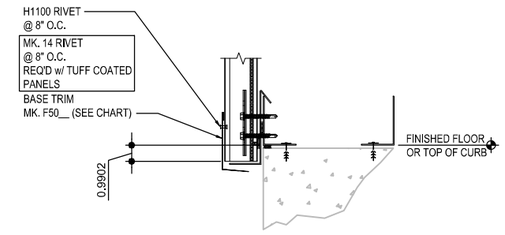

BASE TRIM DETAIL

BASE TRIM WITH BASE ANGLE

TRIM_32

PRIOR TO PANEL ATTACHMENT, COMBINE SUPPORT ANGLE AND INSIDE CORNER TRIM.

THEN ATTACH THE COMBINED PARTS TO THE SECONDARY MEMBERS AT STEEL LINE

PANEL THICKNESS	OUTSIDE TRIM
2"	F5102
2.5"	F5103
3"	F5104
4"	F5101

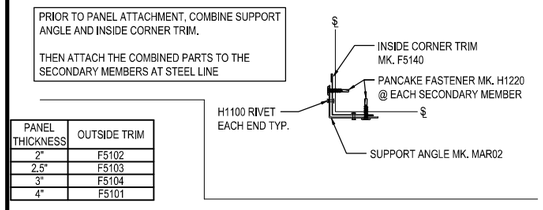

PANEL THICKNESS	THROUGH FASTENER
2"	1424PNC
2.5" / 3"	1432PNC
4"	1440PNC
PRE-DRILL REQUIRED AT HOT-ROLLED SECONDARY	

OUTSIDE CORNER

INSULATED METAL PANEL OUTSIDE CORNER

TRIM_33

ERECTOR NOTE:
4" (MINIMUM) DISTANCE FROM EDGE OF FIELD-CUT PANEL TO JAMB.

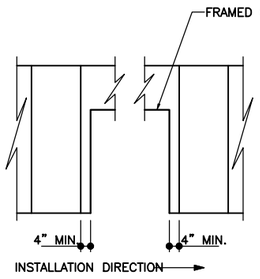

MINIMUM PANEL WIDTH AT F.O. JAMB

(ELEVATION VIEW)

TRIM_34

PANEL THICKNESS	THROUGH FASTENER
2"	1424PNC
2.5" / 3"	1432PNC
4"	1440PNC

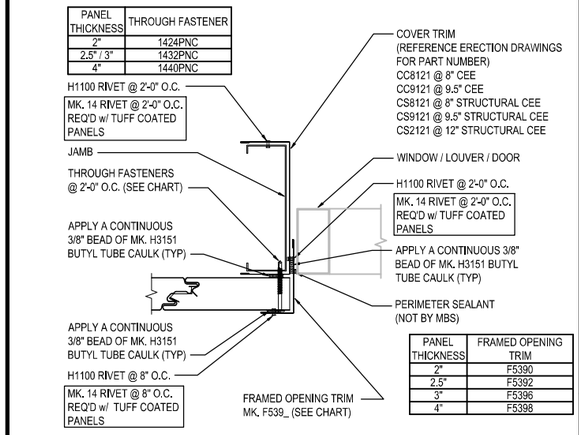

PANEL THICKNESS	FRAMED OPENING TRIM
2"	F5390
2.5"	F5392
3"	F5396
4"	F5398

JAMB TRIM

INSULATED METAL PANEL JAMB TRIM AT COLD FORMED FRAMED OPENING

TRIM_35

PRIOR TO PANEL ATTACHMENT, INSTALL COVER TRIM AND FRAMED OPENING TRIM

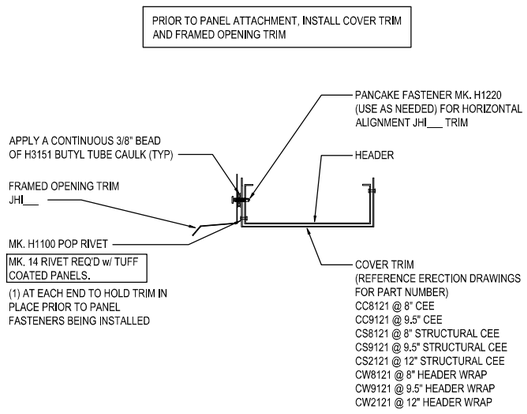

SIDE JOINT OF PANEL

PANEL THICKNESS	HIDDEN FASTENER
2"	1616PNC
2.5" / 3"	1624PNC
4"	1632PNC

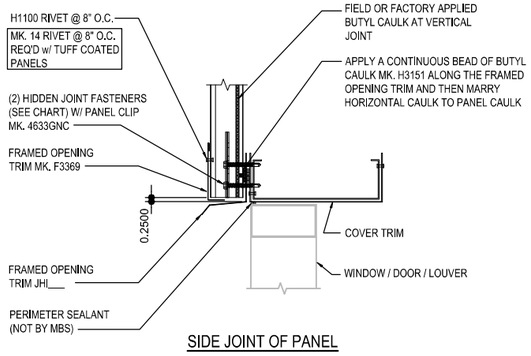

SIDE JOINT OF PANEL

PANEL THICKNESS	THROUGH FASTENER
2"	1424PNC
2.5" / 3"	1432PNC
4"	1440PNC

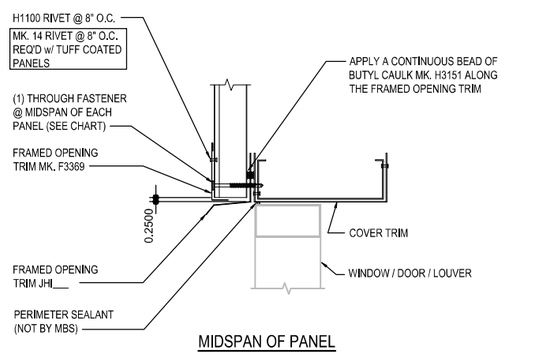

MIDSPAN OF PANEL

HEAD TRIM WITH COLD FORM HEADER

INSULATED WALL PANEL FRAMED OPENING HEADER TRIM

TRIM_36

PRIOR TO PANEL ATTACHMENT, INSTALL COVER TRIM

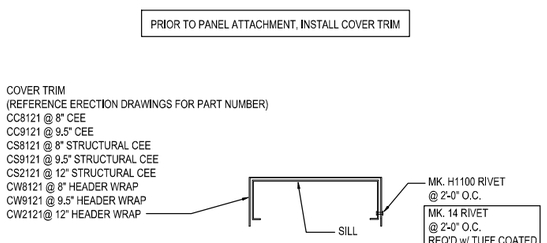

PANEL THICKNESS	HIDDEN FASTENER
2"	1616PNC
2.5" / 3"	1624PNC
4"	1632PNC

PANEL THICKNESS	THROUGH FASTENER
2"	1424PNC
2.5" / 3"	1432PNC
4"	1440PNC

PANEL THICKNESS	SILL TRIM
2"	F5501
2.5"	F5503
3"	F5507
4"	F5509

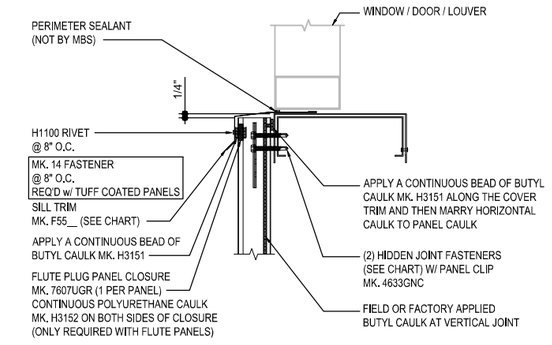

SIDE JOINT OF PANEL

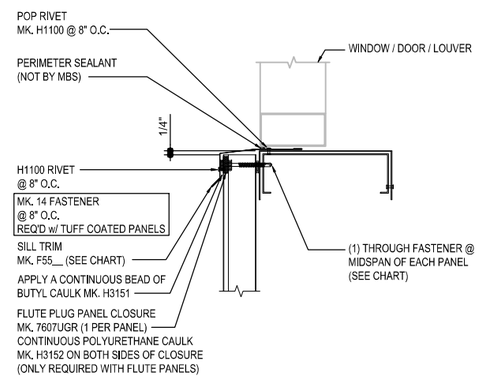

MIDSPAN OF PANEL

SILL TRIM

INSULATED WALL PANEL FRAMED OPENING SILL TRIM

TRIM_37

ISSUE	DWN	CHK	ENG	PE	DATE
CONST. AB PLAN	NBS	EOP	CBM		7/24/2023
BUILDING DEPARTMENT REVIEW	MBS	DAN	CBM		7/31/2023

NUCOR BUILDING SYSTEMS
300 INDUSTRIAL PARKWAY, WATERLOO, IN 46793
PHONE: (260) 837-7891 FAX: (260) 837-7384
PO BOX 1006, 200 WHETSTONE RD, SWANSEA, SC 29160
PHONE: (803) 568-2100 FAX: (803) 568-2121
600 APACHE TRAIL, TERRELL, TX 75160
PHONE: (972) 524-4100 FAX: (972) 524-4147
1050 WATERY LANE, BRIGHAM CITY, UT 84302
PHONE: (435) 919-3100 FAX: (435) 919-3101

PROJECT NAME: WENDOVER FS #13 REPLACEMENT
WENDOVER, NV

CUSTOMER NAME: MICHAEL CLAY CORP
WINNEMUCCA, NV

JOB NUMBER: U23G0555A

SHEET TITLE

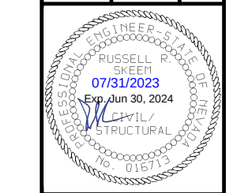

This seal pertains only to the materials and/or services furnished by Nucor Building Systems, a division of Nucor Corporation. The drawings and the information contained therein are the product of Nucor Building Systems and are not to be used in any manner without the express written permission of Nucor Corporation. Nucor Building Systems is a register professional engineering firm and does not seal drawings is employed by Nucor Buildings Systems and does not serve as a record document unless signed and record and shall not be construed as such.

SHEET: D19 of 20

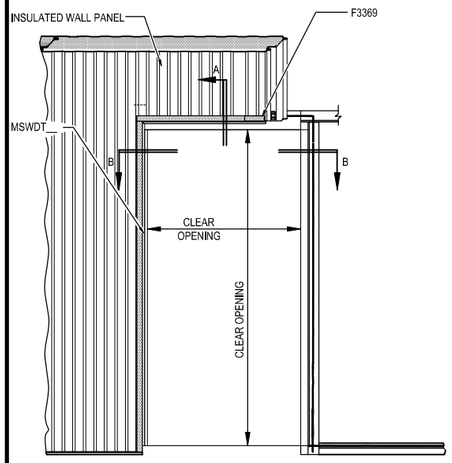

DOOR TRIM ELEVATION

ERECTOR NOTES:
1. THE USE OF A CENTER PUNCH TO SLIGHTLY DIMPLE THE PANEL FACE PRIOR TO INSTALLING THE THROUGH FASTENERS IS RECOMMENDED TO PREVENT "WALKING" OF THE FASTENERS. EXCESIVE DAMAGE OF THE PANEL FINISH CAUSED DURING INSTALLATION MAY VOID THE PANEL FINISH WARRANTY.
2. • ENSURE CAULK IS CONTINUOUS, IF NO CAULK IS PRESENT OR IF CAULK IS NOT CONTINUOUS. FIELD APPLY CONTINUOUS CAULK MK# H3151.
3. FIELD MITERING OF FRAMED OPENING TRIM(S) WILL BE REQUIRED BY THE ERECTOR. FIELD CAULK TRIMS TO ENSURE WEATHER TIGHTNESS AS REQUIRED.

FASTENER CHART

PANEL THICKNESS	THROUGH FASTENER	HIDDEN FASTENER
2"	1424PNC	1616PNC
2 1/2" / 3"	1432PNC	1624PNC
4"	1440PNC	1632PNC

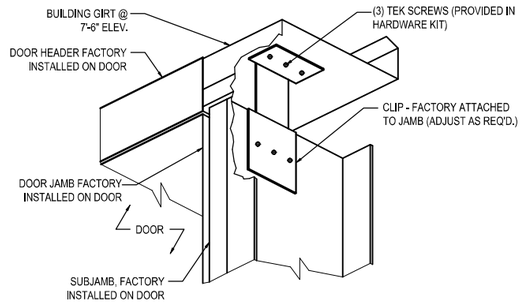

DOOR FRAME INSTALLATION AT TOP

STAND FRAME & ADJUST CLIP AT JAMB AS REQUIRED

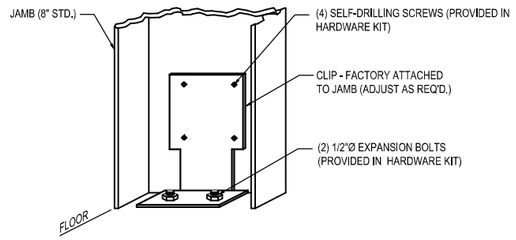

DOOR FRAME INSTALLATION AT BASE

STAND FRAME & ADJUST CLIP AT JAMB AS REQ'D. ATTACH CLIP TO GIRT W/ (3) SELF-DRILLING SCREWS

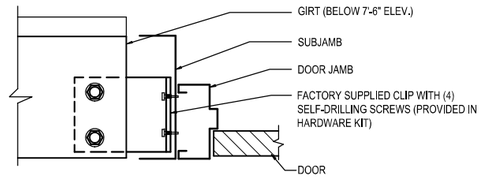

GIRT TO SUBJAMB DETAIL

USE (2) 1/2" X 1 1/4" A307 BOLTS H0500/NUTS H0400
FIELD CUT GIRT TO LENGTH AS REQUIRED
FIELD WORK HOLES IN GIRT TO ACCEPT CLIP AS REQUIRED
REFERENCE STANDARD WASHER DETAIL FOR TYPICAL WASHER REQUIREMENTS

HEAD TRIM @ MID-POINT OF PANEL
SECTION - A

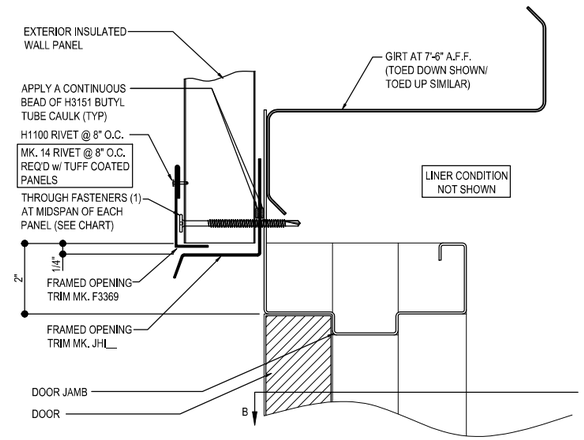

HEAD TRIM @ SIDE JOINT OF PANEL
SECTION - A

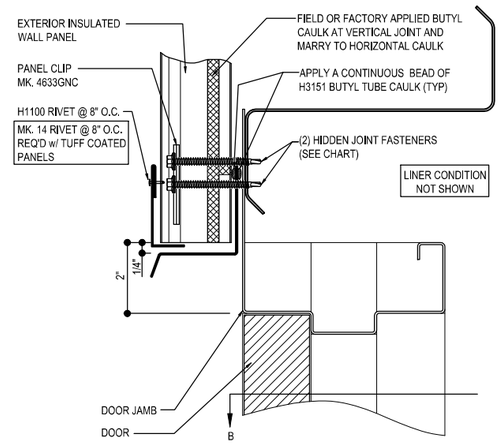

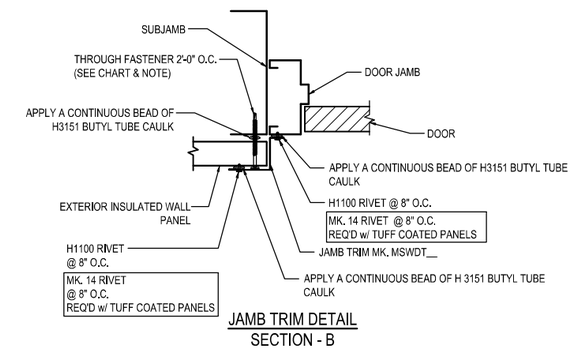

JAMB TRIM DETAIL
SECTION - B

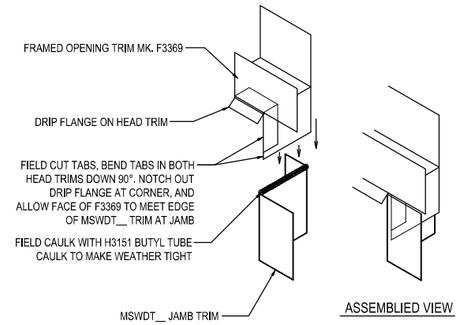

TRIM CORNER DETAIL
TOP RIGHT CORNER SHOWN

WALKDOOR ERECTION DETAILS

USE ONLY WHERE STANDARD NBG DOORS ARE REQUIRED.
SEE BUILDING INFO COVERSHEET FOR STANDARD DOOR REQUIREMENTS.

TRIM_38

ISSUE	DWN	CHK	ENG	PE	DATE
CONST. AB PLAN	NBS	EOP	CBM		7/24/2023
BUILDING DEPARTMENT REVIEW	WBS	DAN	CBM		7/31/2023

NUCOR BUILDING SYSTEMS
300 INDUSTRIAL PARKWAY, WATERLOO, IN 46793
PHONE: (260) 837-7891 FAX: (260) 837-7384
PO BOX 1006, 200 WHETSTONE RD, SWANSEA, SC 29160
PHONE: (803) 568-2100 FAX: (803) 568-2121
600 APACHE TRAIL, TERRELL, TX 75160
PHONE: (972) 524-4000 FAX: (972) 524-4417
1050 WATER LANE, BRIGHAM CITY, UT 84302
PHONE: (435) 919-3100 FAX: (435) 919-3101

PROJECT NAME: WENDOVER FS #13 REPLACEMENT
WENDOVER, NV

CUSTOMER NAME: MICHAEL CLAY CORP
WINNEMUCCA, NV

JOB NUMBER: U23G0555A

SHEET TITLE

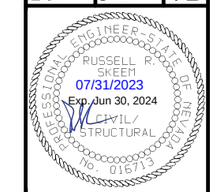

This sealed drawing is provided only to the materials described herein as manufactured by Nucor Building Systems, a division of Nucor Corporation. The drawings and the design shown thereon, are the product of Nucor Building Systems and the professional engineer employed by Nucor Building Systems whose seal appears on these drawings is employed by Nucor Buildings Systems and does not serve as a consultant to the owner of record and shall not be construed as such.

SHEET: D20 of 20



CORE

5330 Reno Corporate Drive
Reno, NV 89511

EXHIBIT 7
WEST WENDOVER FIRE STATION/EOC
PROJECT USEFUL LIFE

As documented in various publications such as the March 1, 2018 Edition of *FIREHOUSE - Station Design Supplement: Planning Pitfalls* and the September 3, 2019 *NFPA Today – Just how old are U.S. fire stations? Pretty old;* publications attached hereto. Fire station facilities are generally considered to have at a minimum a 50-year useful life though often times fire station facilities serve well beyond such limitations extending 60 to 75 years and beyond. This is dependent upon on the type of original construction, the ability to incorporate modernization and/or remodel components and apparatus or future phases to a facility and finally being dependent upon the community in which the stations are located.

In the case of the new West Wendover Fire Station/EOC facility, the useful life considerations would as well be at least 50 years. The existing facility which was constructed under general temporary construction standards in 1983 is now 40 years old. With regard to the new Fire Station facility, USDA Rural Development placed a term on the financing for the facility at 38 years.

With regards to annual maintenance for the new Fire Station/EOC such costs will be covered under the existing Fire Department annual budget. Given the age of the current facility (c.1985) it is anticipated that though the new facility is much larger in size the maintenance costs will be similar or slightly higher, given the 2023 design standards including current NFPA which provides for a much more efficient building operations (i.e. utility costs).

Provided in ***Figure 1*** below is the current FY2024 operational budget of the West Wendover Fire Department for reference.

Figure 1

CITY OF WEST WENDOVER
EXPENDITURES WITH COMPARISON TO BUDGET
FOR THE 1 MONTHS ENDING JULY 01, 2023

GENERAL FUND

		PERIOD ACTUAL	YTD ACTUAL	BUDGET	UNEARNED	PCNT
	FIRE DEPARTMENT					
10-55-110	SALARIES AND WAGES	.00	.00	454,399.00	454,399.00	.0
10-55-210	GROUP INSURANCE	.00	.00	53,040.00	53,040.00	.0
10-55-220	FICA CONTRIBUTION	.00	.00	8,705.00	8,705.00	.0
10-55-230	RETIREMENT CONTRIBUTION	.00	.00	202,919.00	202,919.00	.0
10-55-260	WORKERS COMPENSATION	.00	.00	45,921.00	45,921.00	.0
10-55-410	SEWER/WATER	.00	.00	6,000.00	6,000.00	.0
10-55-421	GARBAGE DISPOSAL	.00	.00	1,200.00	1,200.00	.0
10-55-430	REPAIR & MAINT - FACILITIES	.00	.00	5,000.00	5,000.00	.0
10-55-435	REPAIR & MAINT - VEHICLES	.00	.00	15,000.00	15,000.00	.0
10-55-440	REPAIR & MAINT - EQUIPMENT	.00	.00	22,000.00	22,000.00	.0
10-55-530	COMMUNICATIONS/TELEPHONE	.00	.00	6,600.00	6,600.00	.0
10-55-575	MEMBERSHIP & DUES	.00	.00	2,400.00	2,400.00	.0
10-55-580	TRAVEL/TRAINING	.00	.00	7,000.00	7,000.00	.0
10-55-610	OFFICE SUPPLIES	.00	.00	1,500.00	1,500.00	.0
10-55-612	UNIFORMS	.00	.00	4,700.00	4,700.00	.0
10-55-613	POSTAGE	.00	.00	300.00	300.00	.0
10-55-614	SPECIAL SUPPLIES	.00	.00	24,000.00	24,000.00	.0
10-55-622	ELECTRICITY	.00	.00	5,000.00	5,000.00	.0
10-55-623	PROPANE	.00	.00	6,100.00	6,100.00	.0
10-55-626	GASOLINE	.00	.00	10,000.00	10,000.00	.0
10-55-650	BOOKS/COMPUTER PROGRAMS	.00	.00	2,800.00	2,800.00	.0
10-55-746	TOOLS	.00	.00	500.00	500.00	.0
10-55-835	GRANT EXPENSES	.00	.00	10,000.00	10,000.00	.0
	TOTAL FIRE DEPARTMENT	.00	.00	895,084.00	895,084.00	.0
	TOTAL FUND EXPENDITURES	.00	.00	895,084.00	895,084.00	.0
	NET REVENUE OVER EXPENDITURES	.00	.00	(895,084.00)	(895,084.00)	.0

EXHIBIT 7A
NV CDBG Job Impact Analysis Matrix

Instructions:

Populate Yellow Cells

Project Name:	West Wendover Fire Station/EOC
City/County:	City of West Wendover

Short-term Activity

NAICS	Jobs	Hourly Wage	Industry Title
236220	90	$55.00	Fire Station Construction
922160	8	$40.77	
Total	**98**	**$53.84**	

Insert Rows Here as needed

Long-term Activity

NAICS	Jobs	Hourly Wage	Industry Title
922160	16	$40.77	Fire Department Personnel
Total	**16**	**$40.77**	

Insert Rows Here as needed

Project Name	Anticipated # of full time jobs	Anticipated average hrly. wage	Anticipated average annual wage
West Wendover Fire Station/EOC - Shor	98	$53.84	$111,984
West Wendover Fire Station/EOC - Long	16	$40.77	$84,802
	114	$52.00	$108,169

Instructions:

Populate Yellow Cells

Project Name:	West Wendover Fire Station/EOC
City/County:	City of West Wendover

Short-term Activity

NAICS	Jobs	Hourly Wage	Industry Title	
236220	90	$55.00	Fire Station Construction	
624230	8	$40.77		624230 Emergency and Other Relief Services
Total	**98**	**$53.84**		

Insert Rows Here as needed

Long-term Activity

NAICS	Jobs	Hourly Wage	Industry Title	
624230	16	$40.77	Fire Department Personnel	624230 Emergency and Other Relief Services
Total	**16**	**$40.77**		

Insert Rows Here as needed

Project Name	Anticipated # of full time jobs	Anticipated average hrly. wage	Anticipated average annual wage
West Wendover Fire Station/EOC - Short-term	98	$53.84	$111,984
West Wendover Fire Station/EOC - Long-term	16	$40.77	$84,802
	114	$52.00	$108,169

Aggregate Changes: West Wendover Fire Station

Short-Term Activity

Change in Earnings	Change in Jobs	Change in Taxes on Production and Imports (TPI)
$10,549,626.29	127.00	$594,746.90
1.18 Multiplier	1.29 Multiplier	

Aggregate Effect on Jobs

Initial	Direct	Indirect	Induced
98	11	2	15
1.00 Multiplier	0.11 Multiplier	0.02 Multiplier	0.15 Multiplier

Aggregate Effect on Earnings

Initial	Direct	Indirect	Induced
$8,954,848.2	$740,865.3	$130,765.1	$723,147.7
1.00 Multiplier	0.08 Multiplier	0.01 Multiplier	0.08 Multiplier

Aggregate Effect on Taxes on Production and Imports

Local	State	Federal
$262,246.1	$217,841.8	$114,659.0

Parameters

Industries

Code	Description	Change Type	Change Value
236220	Commercial and Institutional Building Construction	Jobs	90
624230	Emergency and Other Relief Services	Jobs	8

Region

Code	Description
32007	Elko County, NV

Aggregate Changes: West Wendover Fire Station

Long-Term Activity

Change in Earnings	Change in Jobs	Change in Taxes on Production and Imports (TPI)
$1,354,610.44	19.00	$15,504.30
1.12 Multiplier	1.20 Multiplier	

Aggregate Effect on Jobs

Initial	Direct	Indirect	Induced
16	1	0	2.4
1.00 Multiplier	0.05 Multiplier	0.01 Multiplier	0.15 Multiplier

Aggregate Effect on Earnings

Initial	Direct	Indirect	Induced
$1,205,836.4	$37,530.8	$6,993.1	$104,250.1
1.00 Multiplier	0.03 Multiplier	0.01 Multiplier	0.09 Multiplier

Aggregate Effect on Taxes on Production and Imports

Local	State	Federal
$7,626.2	$5,979.0	$1,899.1

Parameters

Industries

Code	Description	Change Type	Change Value
624230	Emergency and Other Relief Services	Jobs	16

Region

Code	Description
32007	Elko County, NV

FINANCIAL STATEMENTS

FOR THE FISCAL YEAR ENDED JUNE 30, 2022

WITH REPORT OF

INDEPENDENT CERTIFIED PUBLIC ACCOUNTANTS

CITY OF WEST WENDOVER, NEVADA

Table of Contents

Page

FINANCIAL SECTION

Independent Auditors' Report....1

Management's Discussion and Analysis....5

Basic Financial Statements:

Government-wide Financial Statements:

Statement of Net Position....14

Statement of Activities....15

Fund Financial Statements:

Balance Sheet – Governmental Funds....16

Reconciliation of the Balance Sheets of Governmental Funds to the Statement of Net Position....17

Statement of Revenues, Expenditures, and Changes in Fund Balances – Governmental Funds....18

Reconciliation of the Statement of Revenues, Expenditures, and Changes in Fund Balances of Governmental Funds to the Statement of Activities....19

Statement of Net Position – Proprietary Funds....20

Statement of Revenues, Expenses, and Changes in Net Position – Proprietary Funds....21

Statement of Cash Flows – Proprietary Funds....22

Notes to the Financial Statements....23

Required Supplementary Information:

Schedules of Revenues, Expenditures, and Changes in Fund Balances – Budget and Actual

General Fund (Detailed)....56

Recreation Fund....59

Schedule of the Proportionate Share of the Net Pension Liability....60

Schedule of Contributions....61

CITY OF WEST WENDOVER, NEVADA

Table of Contents (Continued)

Supplementary Information

Major Governmental Fund Schedules of Revenues, Expenditures, and Changes in Fund Balances – Budget and Actual

Capital Projects Fund 64

Combining and Individual Fund Statements and Schedules:
Combining Balance Sheet – Non-major Governmental Funds 65

Combining Statement of Revenues, Expenditures and Changes in Fund Balances – Non-major Governmental Funds 66

Nonmajor Governmental Fund Schedules of Revenues, Expenditures, and Changes in Fund Balances – Budget and Actual

Seizure Forfeiture Fund 67
Court Administrative Assessments Fund 68
Welcome Center Fund 69
Wendover Will Landmark Fund 70
Grant Fund 71
Community Services and Local School Fund 72
Ad Valorem Capital Projects Fund 73

Major Business-Type Funds:
Water fund:
Schedule of Revenues, Expenses – Budget and Actual 75
Sewer fund:
Schedule of Revenues, Expenses – Budget and Actual 76
Garbage / Compost Facility fund:
Schedule of Revenues, Expenses – Budget and Actual 77

Component Unit Supplementary Schedules:
Statement of Net Position 79
Schedule of Revenues, Expenses – Budget and Actual 80
Statement of Cash Flows 81

OTHER COMMUNICATIONS FROM INDEPENDENT AUDITORS:

Report on Internal Control over Financial Reporting and Compliance 84

Schedule of Fees Imposed Subject to the Provision of NRS 354.5989 86

FINANCIAL SECTION

This page intentionally left blank

Independent Auditors' Report

The Honorable Mayor and Board
West Wendover, Nevada

Report on the Audit of the Financial Statements

Opinions

We have audited the financial statements of the governmental activities, business-type activities, the aggregate discretely presented component units, each major fund, and the aggregate remaining fund information of the City of West Wendover, Nevada (the City), as of and for the year ended June 30, 2022, and the related notes to the financial statements, which collectively comprise the City's basic financial statements as listed in the table of contents.

In our opinion, the accompanying financial statements present fairly, in all material respects, the respective financial position of the governmental activities, business-type activities, the aggregate discretely presented component units, each major fund, and the aggregate remaining fund information of the City, as of June 30, 2022, and the respective changes in financial position and, where applicable, cash flows thereof for the year then ended in accordance with accounting principles generally accepted in the United States of America.

Basis for Opinions

We conducted our audit in accordance with auditing standards generally accepted in the United States of America (GAAS) and the standards applicable to financial audits contained in *Government Auditing Standards*, issued by the Comptroller General of the United States. Our responsibilities under those standards are further described in the Auditor's Responsibilities for the Audit of the Financial Statements section of our report. We are required to be independent of the City and to meet our other ethical responsibilities, in accordance with the relevant ethical requirements relating to our audit. We believe that the audit evidence we have obtained is sufficient and appropriate to provide a basis for our audit opinions.

Change in Accounting Principle

As discussed in Note 1 to the financial statements, in fiscal year 2022, the City implemented the provisions of GASB Statement No. 87, *Leases*. Our opinion is not modified with respect to this matter.

Responsibilities of Management for the Financial Statements

The City's management is responsible for the preparation and fair presentation of the financial statements in accordance with accounting principles generally accepted in the United States of America, and for the design, implementation, and maintenance of internal control relevant to the preparation and fair presentation of financial statements that are free from material misstatement, whether due to fraud or error.

HintonBurdick.com 888-566-1277

In preparing the financial statements, management is required to evaluate whether there are conditions or events, considered in the aggregate, that raise substantial doubt about the City's ability to continue as a going concern for one year after the date that the financial statements are issued or when applicable, one year after the date that the financial statements are available to be issued.

Auditor's Responsibilities for the Audit of the Financial Statements

Our objectives are to obtain reasonable assurance about whether the financial statements as a whole are free from material misstatement, whether due to fraud or error, and to issue an auditor's report that includes our opinions. Reasonable assurance is a high level of assurance but is not absolute assurance and therefore is not a guarantee that an audit conducted in accordance with GAAS will always detect a material misstatement when it exists. The risk of not detecting a material misstatement resulting from fraud is higher than for one resulting from error, as fraud may involve collusion, forgery, intentional omissions, misrepresentations, or the override of internal control. Misstatements are considered material if there is a substantial likelihood that, individually or in the aggregate, they would influence the judgment made by a reasonable user based on the financial statements.

In performing an audit in accordance with GAAS, we:

- Exercise professional judgment and maintain professional skepticism throughout the audit.
- Identify and assess the risks of material misstatement of the financial statements, whether due to fraud or error, and design and perform audit procedures responsive to those risks. Such procedures include examining, on a test basis, evidence regarding the amounts and disclosures in the financial statements.
- Obtain an understanding of internal control relevant to the audit in order to design audit procedures that are appropriate in the circumstances, but not for the purpose of expressing an opinion on the effectiveness of the City's internal control. Accordingly, no such opinion is expressed.
- Evaluate the appropriateness of accounting policies used and the reasonableness of significant accounting estimates made by management, as well as evaluate the overall presentation of the financial statements.
- Conclude whether, in our judgment, there are conditions or events, considered in the aggregate, that raise substantial doubt about the City's ability to continue as a going concern for a reasonable period of time.

We are required to communicate with those charged with governance regarding, among other matters, the planned scope and timing of the audit, significant audit findings, and certain internal control–related matters that we identified during the audit.

Required Supplementary Information

Accounting principles generally accepted in the United States of America require that the management's discussion and analysis, budgetary comparison information, and the pension and OPEB related schedules and notes, as listed in the table of contents be presented to supplement the basic financial statements. Such information is the responsibility of management and, although not a part of the basic financial statements, is required by the Governmental Accounting Standards Board who considers it to be an essential part of financial reporting for placing the basic financial statements in an appropriate operational, economic, or historical context. We have applied certain limited procedures to the required supplementary information in accordance with auditing standards generally accepted in the United States of America, which consisted of inquiries of management about the methods of preparing the information and comparing the information for consistency with management's responses to our inquiries, the basic financial statements, and other knowledge we obtained during our audit of the basic financial statements. We do not express an opinion or provide any assurance on the information because the limited procedures do not provide us with sufficient evidence to express an opinion or provide any assurance.

Supplementary Information

Our audit was conducted for the purpose of forming opinions on the financial statements that collectively comprise the City's basic financial statements. The major fund budgetary comparison schedules, combining and individual non-major fund budgetary schedules, and the component unit supplementary schedules are presented for purposes of additional analysis and are not a required part of the basic financial statements. Such information is the responsibility of management and was derived from and relates directly to the underlying accounting and other records used to prepare the basic financial statements. The information has been subjected to the auditing procedures applied in the audit of the basic financial statements and certain additional procedures, including comparing and reconciling such information directly to the underlying accounting and other records used to prepare the basic financial statements or to the basic financial statements themselves, and other additional procedures in accordance with auditing standards generally accepted in the United States of America. In our opinion, the major fund budgetary comparison schedules, the combining and individual non-major fund budgetary schedules, and the component unit supplementary schedules are fairly stated, in all material respects, in relation to the basic financial statements as a whole.

Other Reporting Required by *Government Auditing Standards*

In accordance with *Government Auditing Standards*, we have also issued our report dated October 27, 2022 on our consideration of the City's internal control over financial reporting and on our tests of its compliance with certain provisions of laws, regulations, contracts, and grant agreements and other matters. The purpose of that report is solely to describe the scope of our testing of internal control over financial reporting and compliance and the results of that testing, and not to provide an opinion on the effectiveness of internal control over financial reporting or on compliance. That report is an integral part of an audit performed in accordance with *Government Auditing Standards* in considering the City's internal control over financial reporting and compliance.

HintonBurdick, PLLC
St. George, Utah
October 27, 2022

This page intentionally left blank

CITY OF WEST WENDOVER, NEVADA
MANAGEMENT'S DISCUSSION AND ANALYSIS

As management of the City of West Wendover (City), we offer readers of the City's financial statements this narrative overview and analysis of the financial activities of the City for the fiscal year ended June 30, 2022. Please read it in conjunction with the accompanying basic financial statements.

FINANCIAL HIGHLIGHTS

- Total assets plus deferred outflows exceed total liabilities plus deferred inflows (net position) by $32.5 million at the close of the fiscal year.
- Total net position increased by $4.5 million from the prior year.
- Governmental activities net position increased by $2.6 million. Business-type net position increased by $1.9 million.
- Total revenues from all governmental sources were $12.07 million and the total cost of all City programs were $9.4 million.
- The General Fund revenues exceeded expenditures, excluding transfers, by $2.76 million.
- At the end of the current fiscal year, unassigned fund balance for the General Fund was $4,442,811, or 70% of total General Fund expenditures, excluding transfers.

USING THIS ANNUAL REPORT

This annual report consists of a series of financial statements. The three components of the financial statements are: (1) Government-wide financial statements which include the Statement of Net Position and the Statement of Activities. These statements provide information about the activities of the City as a whole. (2) Fund financial statements tell how these services were financed in the short term as well as what remains for future spending. Fund financial statements also report the City's operations in more detail than the government-wide statements by providing information about the City's most significant funds. (3) Notes to the financial statements.

Reporting the City as a Whole

The Statement of Net Position and the Statement of Activities (Government-wide)

A frequently asked question regarding the City's financial health is whether the year's activities contributed positively to the overall financial well-being. The Statement of Net Position and the Statement of Activities report information about the City as a whole and about its activities in a way that helps answer this question. These statements include *all* assets and liabilities using the *accrual basis of accounting*, which is similar to the accounting used by most private-sector companies. All of the current year's revenues and expenses are taken into account regardless of when cash is received or paid.

These two statements report the City's net position and changes in them. Net position, the difference between assets and liabilities, are one way to measure the City's financial health, or financial position. Over time, increases or decreases in net position are an indicator of whether the financial health is improving or deteriorating. However, it is important to consider other non-financial factors such as changes in the City's property tax base or condition of the City's roads to accurately assess the overall health of the City.

The Statement of Net Position and the Statement of Activities, present information about the following:

- Government activities – All of the City's basic services are considered to be governmental activities, including general government, judicial, public safety, community development, health and sanitation, culture and recreation, community support, and interest on long-term debt. Consolidated tax, room tax, ad valorem tax, county gaming tax, franchise tax, right of way tolls, motor vehicle tax, and unrestricted investment earnings finance these activities.

- Proprietary activities/Business type activities – The City charges a fee to customers to cover all or most of the cost of the services provided. The City's water, sewer, and garbage / compost systems are reported in this category.

Reporting the City's Most Significant Funds

Fund Financial Statements

The fund financial statements provide detailed information about the most significant funds—not the City as a whole. Some funds are required to be established by State law and others are established by City resolution or by bond covenants. However, management establishes many other funds which aid in the management of money for particular purposes or meet legal responsibilities associated with the usage of certain taxes, grants, and other money. The City's two kinds of funds, *governmental* and *proprietary*, use different accounting approaches as explained below.

- *Governmental funds* – Most of the City's basic services are reported in governmental funds. Governmental funds focus on how resources flow in and out with the balances remaining at year-end that are available for spending. These funds are reported using an accounting method called the *modified accrual* accounting method, which measures cash and all other *financial* assets that can readily be converted to cash. The governmental fund statements provide a detailed *short-term view* of the City's general government operations and the basic services it provides. Government fund information shows whether there are more or fewer financial resources that can be spent in the near future to finance the City's programs. We describe the relationship (or differences) between governmental *activities* (reported in the Statement of Net Position and the Statement of Activities) and governmental *funds* in a reconciliation included with the Basic Financial Statements.

- *Proprietary funds* – The City maintains enterprise and internal service funds under this category. Enterprise funds are used to account for functions presented in the business-type section of the government-wide financial statements. Internal service funds are used to account for the financing of goods or services provided by one department or agency to other departments or agencies of the government.

Notes to the Financial Statements

Notes to the financial statements are included to provide information that is crucial to the full and complete understanding of the data provided in the financial statements.

GOVERNMENT-WIDE FINANCIAL ANALYSIS

Net position may serve over time as a useful indicator of the City's financial position. The City's combined assets exceed liabilities by $32.5 million as of June 30, 2022 as shown in the following condensed statement of net position. The City has chosen to account for its water, sewer, and garbage/compost operations in enterprise funds which are shown as Business Activities.

City of West Wendover, Nevada
Statement of Net Position

	Governmental activities		Business-type activities		Combined Total	
Assets	06/30/22	06/30/21	06/30/22	06/30/21	06/30/22	06/30/21
Current and other assets	$ 7,568,537	$ 5,470,345	$ 9,101,739	$ 6,827,828	$ 16,670,276	$ 12,298,173
Net capital assets	19,864,065	18,913,646	15,775,100	16,782,256	35,639,165	35,695,902
Total assets	27,432,602	24,383,991	24,876,839	23,610,084	52,309,441	47,994,075
Deferred outflows	2,701,647	1,136,058	603,717	245,744	3,305,364	1,381,802
Liabilities						
Current liabilities	1,410,309	876,907	86,119	82,794	1,496,428	959,701
Long-term liabilities outstanding	10,184,111	11,898,054	6,600,143	7,566,728	16,784,254	19,464,782
Total liabilities	11,594,420	12,774,961	6,686,262	7,649,522	18,280,682	20,424,483
Deferred inflows	3,927,012	843,799	877,541	182,525	4,804,553	1,026,324
Net position:						
Net investment in capital assets	14,371,482	13,890,197	12,305,019	12,799,552	26,676,501	26,689,749
Restricted	334,273	231,268	894,208	786,745	1,228,481	1,018,013
Unrestricted	(92,938)	(2,220,176)	4,717,526	2,437,484	4,624,588	217,308
Total net position	$ 14,612,817	$ 11,901,289	$ 17,916,753	$ 16,023,781	$ 32,529,570	$ 27,925,070

Governmental Activities

The cost of all Governmental activities this year was $9,438,727. As shown on the statement of Changes in Net Position on the following page, $1,597,973 of this cost was paid for by those who directly benefited from the programs; $2,048,931 was subsidized by grants received from other governmental organizations for both capital and operating activities. Overall governmental program revenues, including intergovernmental aid and fees for services were $3,646,940. General taxes, asset sales, and other general revenues totaled $8,425,429.

The City's programs include: general government, judicial, public safety, public works, community development, health and sanitation, culture and recreation, community support, and interest on long-term debt. Each programs' total cost is presented below.

City of West Wendover, Nevada
Changes in Net Position

	Governmental activities		Business-type activities		Combined Total	
	06/30/22	06/30/21	06/30/22	06/30/21	06/30/22	06/30/21
Revenues:						
Program revenues:						
Charges for services	$ 1,597,973	$ 1,485,953	$ 4,327,971	$ 3,805,092	$ 5,925,944	$ 5,291,045
Operating grants	1,545,394	1,039,804	1,399,752	-	2,945,146	1,039,804
Capital grants	503,537	227,528	-	1,496	503,537	229,024
General revenues:						
State shared revenue (unrestricted)	3,431,645	3,174,768	-	-	3,431,645	3,174,768
Room taxes	1,967,604	1,602,940	-	-	1,967,604	1,602,940
Ad valorem taxes	1,750,136	1,711,478	-	-	1,750,136	1,711,478
County gaming taxes	438,278	513,765	-	-	438,278	513,765
Franchise taxes	393,399	380,431	-	-	393,399	380,431
Right of way toll	256,628	255,582	-	-	256,628	255,582
Motor vehicle taxes	106,163	109,155	-	-	106,163	109,155
Other taxes	4,560	5,363	-	-	4,560	5,363
Investment earnings	5,852	2,838	50,726	40,083	56,578	42,921
Gain on sale of capital assets	-	202,324	-	-	-	202,324
Miscellaneous revenues	71,164	10,551	57,096	55,705	128,260	66,256
Total revenues	12,072,333	10,722,480	5,835,545	3,902,376	17,907,878	14,624,856
Expenses:						
General government	1,538,091	1,719,931	-	-	1,538,091	1,719,931
Judicial	453,528	391,744	-	-	453,528	391,744
Public safety	3,437,837	4,057,492	-	-	3,437,837	4,057,492
Public works	332,428	705,185	-	-	332,428	705,185
Community development	490,922	430,177	-	-	490,922	430,177
Health and sanitation	140,372	153,113	-	-	140,372	153,113
Culture and recreation	2,495,841	1,635,301	-	-	2,495,841	1,635,301
Community support	354,459	314,546	-	-	354,459	314,546
Interest on long term debt	195,249	201,255	-	-	195,249	201,255
Water	-	-	1,414,249	1,424,927	1,414,249	1,424,927
Sewer	-	-	1,506,864	1,487,574	1,506,864	1,487,574
Garbage/Compost	-	-	1,021,460	1,054,003	1,021,460	1,054,003
Total expenses	9,438,727	9,608,744	3,942,573	3,966,504	13,381,300	13,575,248
Increase in net position	2,633,606	1,113,736	1,892,972	(64,128)	4,526,578	1,049,608
Net position, beginning	11,901,289	10,787,553	16,023,781	16,087,909	27,925,070	26,875,462
Prior period adjustment	77,922	-	-	-	77,922	-
Net position, ending	$ 14,612,817	$ 11,901,289	$ 17,916,753	$ 16,023,781	$ 32,529,570	$ 27,925,070

Total resources available during the year to finance governmental operations were $23,973,662 consisting of Net Position at July 1, 2021 of $11.9 million, program revenues of $3.6 million and General Revenue of $8.4 million. Total cost of Governmental Activities during the year were $9.4 million; thus, Governmental Net Position increased by $2,633,606 to $14.6 million.

The following graphs compare program expenses to program revenues and provide a breakdown of revenues by source for all government activities. The charts below are derived from the Statement of Activities on page 15.

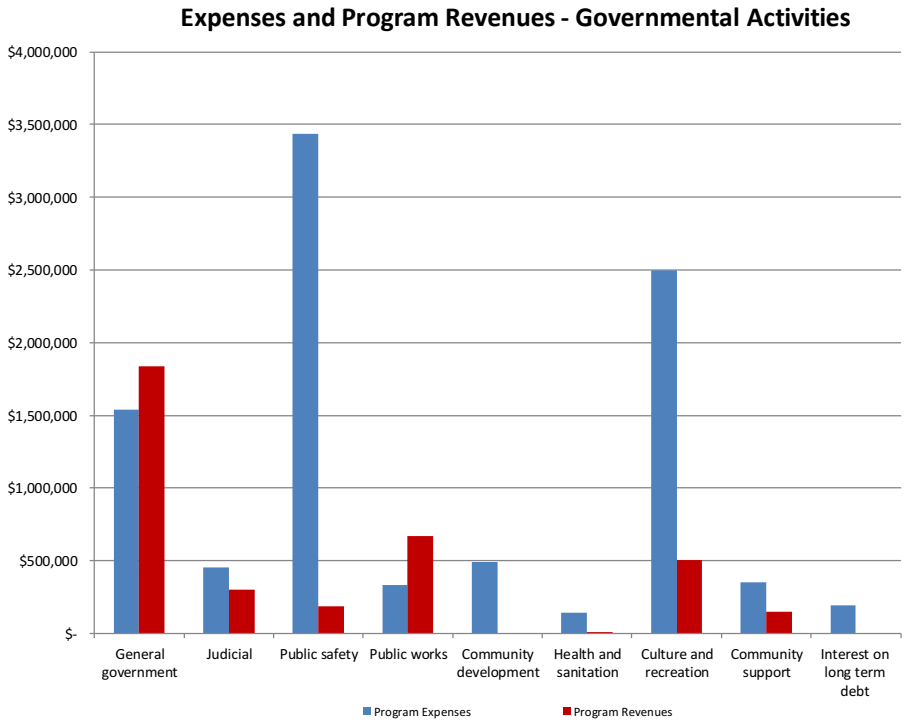

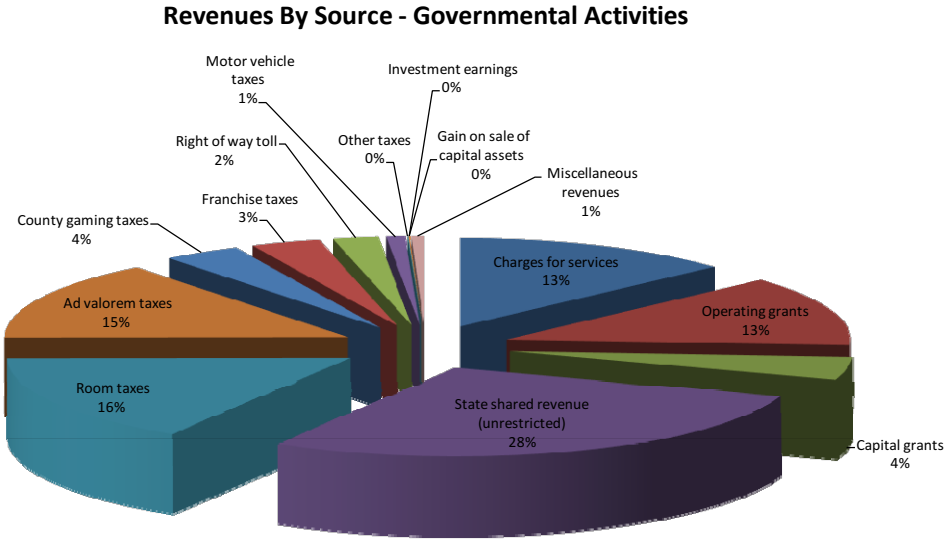

Business Type Activities

Net position of the Business Type activities at June 30, 2022, as reflected in the Statement of Net Position was $17.9 million. The cost of providing all Proprietary (Business Type) activities this year was $3.9 million. As shown in the Statement of Activities, the amounts paid by users of the system were $4.3 million and $1,399,752 was subsidized by capital grants and contributions. Unrestricted investment earnings totaled $50,726; other revenue totaled $57,096, thus, net position increased by $1,892,972.

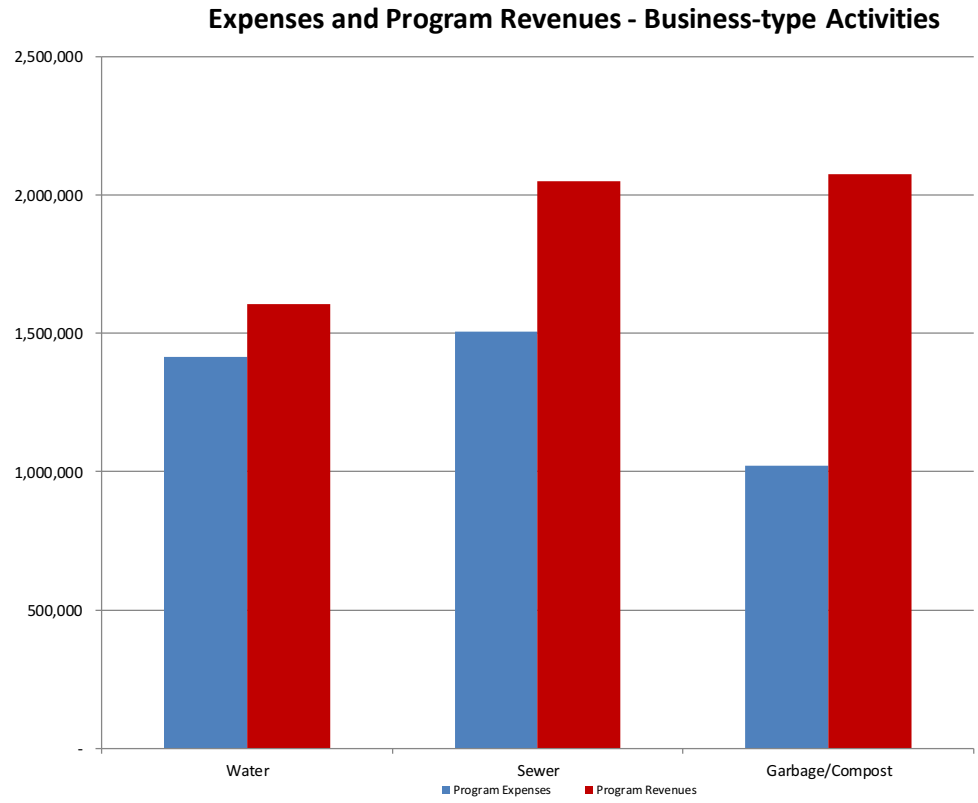

Financial Analysis of the Government's Funds

As noted earlier, the City of West Wendover uses fund accounting to ensure and demonstrate compliance with finance-related legal requirements.

Governmental funds: The focus of the City of West Wendover's governmental funds is to provide information on near-term inflows, outflows, and balances of spendable resources. Such information is useful in assessing the City of West Wendover's financing requirements. In particular, unassigned fund balance may serve as a useful measure of a government's net resources available for spending at the end of the fiscal year.

As of the end of the current fiscal year, the City of West Wendover's governmental funds reported combined ending fund balances of $6,032,212, an increase of $1,596,510 in comparison with the prior year. 88% of the total fund balance or $4,442,811 constitutes unassigned fund balance, which is available for new spending at the government's discretion.

The general fund is the chief operating fund of the City of West Wendover. At the end of the current fiscal year, unassigned fund balance in the general fund was $4,442,811, and total fund balance is $5,011,874. As a measure of liquidity, it may be useful to compare both unassigned fund balance and total fund balance to total fund expenditures. Total unassigned fund balance represents 70% of total general fund expenditures. During the year, the City of West Wendover's general fund balance was budgeted to increase by $217,371. The total fund balance increased by $1,190,119 due primarily to increases in consolidated tax revenue and lower expenditures then budgeted.

The recreation fund has a fund balance of $260,624, all of which is restricted for culture and recreation appropriation. Change in fund balance for the year was $97,021.

Proprietary funds

The City of West Wendover's proprietary funds provide the same type of information found in the government-wide financial statements, but in more detail.

At June 30, 2022, unrestricted net position amounted to $1,080,614 for the water fund. The change in net position for fiscal year 2022 was $263,148 and the change in net position for fiscal year 2021 was ($58,263). The increase in the change in net position from the prior year was due to American Recue Plan Act grant revenues.

At June 30, 2022, unrestricted net position amounted to $745,705 for the sewer fund. The change in net position for fiscal year 2022 was $550,939 and the change in net position for fiscal year 2021 was ($363,681). The increase in the change in net position from the prior year was due to American Recue Plan Act grant revenues.

At June 30, 2022, unrestricted net position amounted to $2,891,207 for the garbage/compost fund. The change in net position for fiscal year 2022 was $1,078,885 and the change in net position for fiscal year 2021 was $357,816. The increase in the change in net position from the prior year was due to an increase in operating revenues and American Recue Plan Act grant revenues.

General Fund Budgetary Highlights

Actual expenditures for the General Fund at year-end were $727,941 less than the final budget. The favorable budget to actual variance in appropriations was principally due to overall savings in services and supplies for all departments. Actual revenues were more than the final budget by $254,038.

CAPITAL ASSET AND DEBT ADMINISTRATION

Capital Assets

The capital assets of the City are those assets that are used in performance of City functions including infrastructure assets. Capital Assets include equipment, buildings, land, park facilities and roads. At the end of fiscal year 2022, net capital assets of the government activities totaled $19.9 million and the net capital assets of the business-type activities totaled $15.8 million. Depreciation on governmental-type capital assets is recognized in the Government-Wide financial statements. (See note 6 to the financial statements.)

Long Term Liabilities

At year-end, the City had $10.2 million in governmental type long term liabilities, and $6.6 million in proprietary long term liabilities. The liabilities amounts to $3,928 per capita (4,273 – 2019 population US Census Bureau Website 2019). The City's net decrease in total long term liabilities was $2,680,528. (See note 7 to the financial statements for detailed descriptions.)

NEXT YEAR'S BUDGET AND ECONOMIC FACTORS

In considering the City budget for fiscal year 2022-2023, the City Council and management continue to remain cautious as to the growth of revenues and expenditures as the City moves forward from the impact of COVID-19.

The City entered into a three year Collective Bargaining Agreement with the Police Officers Association, effective July 1, 2021 through June 30, 2024, which provides for a total six percent (6%) increase in wages over three (3) years. The City also entered into a three year labor agreement with Local 4041, effective July 1, 2021 through June 30, 2024, which also provides for a total six percent (6%) increase in wages over three (3) years for all classifications with the exception of dispatchers. Dispatcher and lead dispatcher classifications shall have a total nine percent (9%) increase in wages over the next three (3) fiscal years.

Projects that are reflected in the City Budget for the fiscal year 2022-2023 are as follows:

- The acquisition of the BLM land has been completed and the City may now proceed with the downtown development project. Phase I of the City downtown development is estimated to cost $8.072M. The fire station facility is estimated to cost $8.992M.
- The City will complete street rehabilitation on Wendover Blvd for $830K, and complete pedestrian enhancement at Exit-410 for $100K

CONTACTING THE CITY'S FINANCIAL MANAGEMENT

This financial report is designed to provide our citizens, taxpayers, customers, investors and creditors with a general overview of the City's finances and to show the City's accountability for the money it receives. If you have questions about this report or need additional financial information, please contact the City's Chief Financial Officer at the City of West Wendover, 1111 N. Gene L. Jones Way, West Wendover, Nevada 89883 or visit us online at http://www.westwendovercity.com

BASIC FINANCIAL STATEMENTS

CITY OF WEST WENDOVER, NEVADA
Statement of Net Position
June 30, 2022

	Primary Government			Component Unit
	Governmental Activities	Business-type Activities	Total	Johnson Springs
Assets				
Cash and temporary investments	$ 5,858,363	$ 5,762,391	$ 11,620,754	$ 559,602
Accounts receivable, net	1,161,996	445,533	1,607,529	69,090
Due from component unit	-	1,949,463	1,949,463	-
Inventory	47,324	39,515	86,839	15,053
Prepaid items	186,914	10,629	197,543	-
Restricted cash	313,940	894,208	1,208,148	-
Lease receivable	59,276	-	59,276	-
Capital assets not being depreciated:				
Land	1,416,475	111,000	1,527,475	18,000
Construction in progress	1,987,818	-	1,987,818	-
Capital assets, net of accumulated depreciation:				
Buildings, net	7,137,500	3,148,366	10,285,866	1,792,934
Improvements other than buildings, net	8,863,201	1,915,794	10,778,995	194,058
Machinery and equipment, net	459,071	722,896	1,181,967	124,407
Utility systems	-	9,877,044	9,877,044	3,027,082
Total assets	27,491,878	24,876,839	52,368,717	5,800,226
Deferred Outflows of Resources				
Deferred outflows related to pensions	2,701,647	603,717	3,305,364	45,602
Liabilities				
Accounts payable	1,100,715	34,853	1,135,568	27,846
Accrued interest payable	22,427	46,954	69,381	-
Accrued expenses	233,029	-	233,029	1,687
Due to primary government	-	-	-	1,949,463
Unearned revenue	54,138	-	54,138	-
Deposits payable	-	4,312	4,312	-
Noncurrent liabilities				
Due within one year	645,597	621,492	1,267,089	10,144
Due in more than one year	5,193,153	5,007,625	10,200,778	-
Net pension liability	4,345,361	971,026	5,316,387	73,348
Total liabilities	11,594,420	6,686,262	18,280,682	2,062,488
Deferred Inflows of Resources				
Deferred inflows related to leases	59,276	-	59,276	-
Deferred inflows related to pensions	3,927,012	877,541	4,804,553	66,286
Total deferred inflows of resources	3,986,288	877,541	4,863,829	66,286
Net Position				
Net investment in capital assets	14,371,482	12,305,019	26,676,501	3,207,018
Restricted for:				
Judicial	73,649	-	73,649	-
Culture and recreation	260,624	-	260,624	-
Debt service	-	749,208	749,208	-
Restricted for closure/post closure		145,000	145,000	
Unrestricted	(92,938)	4,717,526	4,624,588	510,036
Total net position	$ 14,612,817	$ 17,916,753	$ 32,529,570	$ 3,717,054

The accompanying notes are an integral part of the financial statements.

CITY OF WEST WENDOVER, NEVADA
Statement of Activities
For the Year Ended June 30, 2022

Functions/Programs	Expenses	Program Revenues: Charges for Services	Program Revenues: Operating Grants & Contributions	Program Revenues: Capital Grants & Contributions	Net (Expense) Revenue and Changes in Net Position: Governmental Activities	Net (Expense) Revenue and Changes in Net Position: Business-Type Activities	Net (Expense) Revenue and Changes in Net Position: Total	Component Unit Johnson Springs
Governmental:								
General government	$ 1,538,091	$ 1,202,290	$ 621,866	$ 11,308	$ 297,373	$ -	$ 297,373	$ -
Judicial	453,528	234,578	66,914	-	(152,036)	-	(152,036)	-
Public safety	3,437,837	34,012	54,969	99,718	(3,249,138)	-	(3,249,138)	-
Public works	332,428	121,404	155,000	390,011	333,987	-	333,987	-
Community development	490,922	-	-	-	(490,922)	-	(490,922)	-
Health and sanitation	140,372	3,812	-	-	(136,560)	-	(136,560)	-
Culture and recreation	2,495,841	-	503,730	-	(1,992,111)	-	(1,992,111)	-
Community support	354,459	1,877	142,915	2,500	(207,167)	-	(207,167)	-
Interest on long term debt	195,249	-	-	-	(195,249)	-	(195,249)	-
Total governmental activities	9,438,727	1,597,973	1,545,394	503,537	(5,791,823)	-	(5,791,823)	-
Business-type:								
Water	1,414,249	1,340,630	263,207	-	-	189,588	189,588	-
Sewer	1,506,864	1,220,332	829,342	-	-	542,810	542,810	-
Garbage/Compost	1,021,460	1,767,009	307,203	-	-	1,052,752	1,052,752	-
Total business-type activities	3,942,573	4,327,971	1,399,752	-	-	1,785,150	1,785,150	-
Total primary government	$ 13,381,300	$ 5,925,944	$ 2,945,146	$ 503,537				
Component Unit:								
Johnson Springs	$ 896,305	$ 716,382	$ 154,315	$ -				(25,608)
General Revenues:								
State Shared Revenue (Unrestricted)					3,431,645	-	3,431,645	-
Room taxes					1,967,604	-	1,967,604	-
Ad valorem taxes					1,750,136	-	1,750,136	-
County gaming taxes					438,278	-	438,278	-
Franchise taxes					393,399	-	393,399	-
Right of way toll					256,628	-	256,628	-
Motor vehicle taxes					106,163	-	106,163	-
Other taxes					4,560	-	4,560	-
Investment earnings					5,852	50,726	56,578	4,022
Miscellaneous revenues					71,164	57,096	128,260	60,000
Total general revenues and transfers					8,425,429	107,822	8,533,251	64,022
Change in net position					2,633,606	1,892,972	4,526,578	38,414
Net position - beginning					11,901,289	16,023,781	27,925,070	3,678,640
Prior period adjustment					77,922	-	77,922	-
Net position - ending					$ 14,612,817	$ 17,916,753	$ 32,529,570	$ 3,717,054

The accompanying notes are an integral part of the financial statements.

CITY OF WEST WENDOVER, NEVADA
Balance Sheet
Governmental Funds
June 30, 2022

	General Fund	Recreation Fund	Capital Projects Fund	Nonmajor Governmental Funds	Total Governmental Funds
Assets					
Cash and temporary investments	$ 4,413,720	$ 249,059	$ 873,025	$ 171,877	$ 5,707,681
Accounts receivable, net	7,909	185,059	-	-	192,968
Due from other governments	945,135	-	-	23,893	969,028
Lease receivable	59,276	-	-	-	59,276
Inventory	46,175	-	-	1,149	47,324
Prepaid and other items	116,559	-	-	-	116,559
Restricted cash	440	-	313,500	-	313,940
Total assets	5,589,214	434,118	$ 1,186,525	$ 196,919	$ 7,406,776
Liabilities					
Accounts payable	$ 230,897	$ 173,494	$ 603,251	$ 20,479	$ 1,028,121
Accrued liabilities	233,029	-	-	-	233,029
Unearned revenue	54,138	-	-	-	54,138
Total liabilities	518,064	173,494	603,251	20,479	1,315,288
Deferred Inflows of Resources					
Deferred inflows related to leases	59,276	-	-	-	59,276
Fund Balances					
Nonspendable			-		
Inventories	46,175	-		1,149	47,324
Prepaid items	116,559	-		-	116,559
Restricted					
Recreation district	-	260,624		-	260,624
Capital improvement projects	-	-	583,274	54,124	637,398
Courts and other judicial programs	-	-		73,649	73,649
Parks and other cultural and recreation programs	-	-		29,796	29,796
Other purposes	440	-		-	440
Committed			-		
Parks and other cultural and recreation programs	405,889	-		17,722	423,611
Unassigned	4,442,811	-	-	-	4,442,811
Total fund balances	5,011,874	260,624	583,274	176,440	6,032,212
Total liabilities and fund balances	$ 5,529,938	$ 434,118	$ 1,186,525	$ 196,919	$ 7,347,500

The accompanying notes are an integral part of the financial statements.

CITY OF WEST WENDOVER, NEVADA
Reconciliation of the Balance Sheets of Governmental Funds
To the Statement of Net Position
June 30, 2022

Total fund balances - governmental funds		$ 6,032,212
Amounts reported for governmental activities in the statement of net position are different because:		
Capital assets used in governmental activities are not financial resources and therefore are not reported in the funds.		
Governmental capital assets	$ 32,378,479	
Accumulated depreciation	(12,514,414)	
		19,864,065
Long-term liabilities are not due and payable in the current period and therefore are not reported in the funds.		
Net pension liabilities	$ (4,345,361)	
Bonds payable	(5,492,583)	
Compensated absences	(346,167)	
Interest payable	(22,427)	
		(10,206,538)
The internal service fund is used by management to charge the cost of insurance to individual funds. The assets and liabilities of the internal service funds are included in the governmental activities in the statement of net position.		148,443
Deferred outflows and inflows of resources related to pensions are applicable to future reporting periods and, therefore, are not reported in the funds.		
Deferred outflows	$ 2,701,647	
Deferred inflows	(3,927,012)	
		(1,225,365)
Total net position - governmental activities		$ 14,612,817

The accompanying notes are an integral part of the financial statements.

CITY OF WEST WENDOVER, NEVADA
Statement of Revenues, Expenditures and Changes in Fund Balances
Governmental Funds
For the Year Ended June 30, 2022

	General Fund	Recreation Fund	Capital Projects Fund	Nonmajor Governmental Funds	Total Governmental Funds
Revenues					
Taxes	$ 1,614,981	$ 1,967,604	$ -	$ 59,564	$ 3,642,149
Licenses and permits	1,935,265	-	-	-	1,935,265
Intergovernmental	5,263,677	503,730	205,511	138,275	6,111,193
Charges for services	48,446	-	-	5,733	54,179
Fines and forfeits	49,720	-	-	-	49,720
Miscellaneous revenues	205,270	-	72,431	2,325	280,026
Total revenues	9,117,359	2,471,334	277,942	205,897	12,072,532
Expenditures					
Current					
General government	1,170,081	-	-	-	1,170,081
Judicial	482,724	-	-	1,930	484,654
Public safety	3,599,715	-	-	-	3,599,715
Public works	571,395	-	-	-	571,395
Community development	294,600	-	-	-	294,600
Health	126,199	-	-	-	126,199
Culture and recreation	15,522	2,374,313	-	-	2,389,835
Community support	39,148	-	-	311,836	350,984
Capital outlay	-	-	1,844,895	-	1,844,895
Debt service	55,853	-	520,987	-	576,840
Total expenditures	6,355,237	2,374,313	2,365,882	313,766	11,409,198
Excess (deficiency) of revenues over (under) expenditures	2,762,122	97,021	(2,087,940)	(107,869)	663,334
Other Financing Sources (Uses)					
Debt proceeds	-	-	855,253	-	855,253
Transfers in	-	-	1,432,000	201,311	1,633,311
Transfers out	(1,572,003)	-	-	(61,308)	(1,633,311)
Total other financing sources and uses	(1,572,003)	-	2,287,253	140,003	855,253
Net change in fund balances	1,190,119	97,021	199,313	32,134	1,518,587
Fund balances, beginning of year	3,743,833	163,603	383,961	144,306	4,435,703
Prior period adjustment	77,922	-	-	-	77,922
Fund balances, end of year	$ 5,011,874	$ 260,624	$ 583,274	$ 176,440	$ 6,032,212

The accompanying notes are an integral part of the financial statements.

CITY OF WEST WENDOVER, NEVADA
Reconciliation of the Statement of Revenues,
Expenditures, and Changes in Fund Balances of Governmental Funds
To the Statement of Activities
For the Year Ended June 30, 2022

Amounts reported for governmental activities in the statement of activities are different because:		
Net change in fund balances - total governmental funds		$ 1,518,587
Governmental funds report capital outlays as expenditures. However, in the statement of activities, the costs of those assets is allocated over their estimated useful lives and reported as depreciation expense. This is the amount by which capital outlay exceeded depreciation in the current period.		
Capital outlay	$ 1,868,889	
Depreciation expense	(918,470)	950,419
Payments on long term receivables recorded as revenue in the governmental funds are reported as a reduction of receivables in the statement of net position.		(199)
The issuance of long-term debt (e.g., bond, leases) provides current financial resources in the governmental funds but increases long-term liabilities in the statement of net position.		(855,253)
Repayment of bond principal is an expenditure in the governmental funds, but the repayment reduces long-term liabilities in the statement of net position.		386,119
Accrued interest for long-term debt is not reported as an expenditure for the current period while it is recorded in the statement of activities. The adjustment reflects the change in interest payable		(4,528)
Pension contributions are reported as expenditures in the governmental funds when made. However, they are reported as deferred outflows of resources in the Statement of Net Position because the net pension liability is measured a year before the City's report date. Pension expense, which is the change in the net pension liability adjusted for changes in deferred outflows and inflows of resources related to pension, is reported in the Statement of Activities.		
Pension contributions	$ 539,945	
Pension expense	161,745	701,690
Compensated absences expenses reported in the statement of activities do not require the use of current financial resources and therefore are not reported as expenditures in the governmental funds. This adjustment reflects the change in compensated absences payable.		(36,237)
The internal service fund is used by management to charge the cost of insurance to the various funds. The net revenue (loss) of the internal service fund is reported with governmental activities.		(26,992)
Change in net position of governmental activities		$ 2,633,606

The accompanying notes are an integral part of the financial statements.

CITY OF WEST WENDOVER, NEVADA
Statement of Net Position
Proprietary Funds
June 30, 2022

	Water Fund	Sewer Fund	Garbage/ Compost Fund	Total Proprietary Funds	Health Insurance Internal Service Fund
Assets					
Current assets					
Cash and investments	$ 1,470,364	$ 1,100,922	$ 3,191,105	$ 5,762,391	$ 150,682
Accounts receivable, net	160,065	136,140	149,328	445,533	-
Inventory	34,761	4,754	-	39,515	-
Prepaid expenses	2,324	6,105	2,200	10,629	70,355
Total current assets	1,667,514	1,247,921	3,342,633	6,258,068	221,037
Noncurrent assets					
Restricted cash	628,424	120,784	145,000	894,208	-
Due from component unit	1,949,463	-	-	1,949,463	-
Capital assets:					
Land	111,000	-	-	111,000	-
Buildings	1,277,649	1,173,762	1,535,458	3,986,869	-
Improvements other than buildings	974,603	76,600	5,164,633	6,215,836	-
Machinery and equipment	925,345	1,348,542	2,411,636	4,685,523	-
Utility system	2,232,105	15,820,916	-	18,053,021	-
Less accumulated depreciation	(2,721,912)	(8,290,733)	(6,264,504)	(17,277,149)	-
Total noncurrent assets	5,376,677	10,249,871	2,992,223	18,618,771	-
Total assets	7,044,191	11,497,792	6,334,856	24,876,839	221,037
Deferred Outflows of Resources					
Deferred outflows related to pensions	172,949	226,412	204,356	603,717	-
Liabilities					
Current liabilities					
Accounts payable	8,142	14,568	12,143	34,853	72,594
Accrued interest payable	24,806	10,518	11,630	46,954	-
Compensated absences	6,758	10,274	6,275	23,307	-
Customer deposits	4,312	-	-	4,312	-
Current portion of noncurrent liabilities	192,277	130,117	275,791	598,185	-
Total current liabilities	236,295	165,477	305,839	707,611	72,594
Noncurrent liabilities:					
Notes payable	-	-	118,099	118,099	-
Net pension liability	278,173	364,164	328,689	971,026	-
Bonds payable	2,575,742	2,229,451	84,333	4,889,526	-
Total noncurrent liabilities	2,853,915	2,593,615	531,121	5,978,651	-
Total liabilities	3,090,210	2,759,092	836,960	6,686,262	72,594
Deferred Inflows of Resources					
Deferred inflows related to pensions	251,392	329,104	297,045	877,541	-
Net Position					
Net investment in capital assets	2,166,500	7,769,519	2,369,000	12,305,019	-
Restricted for debt service	628,424	120,784	-	749,208	-
Restricted for closure/post closure	-	-	145,000	145,000	
Unrestricted	1,080,614	745,705	2,891,207	4,717,526	148,443
Total net position	$ 3,875,538	$ 8,636,008	$ 5,405,207	$ 17,916,753	$ 148,443

The accompanying notes are an integral part of the financial statements.

CITY OF WEST WENDOVER, NEVADA
Statement of Revenues, Expenses, and Changes in Net Position
Proprietary Funds
For the Year Ended June 30, 2022

	Water Fund	Sewer Fund	Garbage/ Compost Fund	Total Proprietary Funds	Health Insurance Internal Service Fund
Operating revenues					
Charges for services	$ 1,340,630	$ 1,220,332	$ 1,767,009	$ 4,327,971	$ 1,015,257
Operating expenses					
Water purchases	567,230	-	-	567,230	-
Salaries and wages	83,386	332,126	291,040	706,552	-
Employee benefits	240,323	130,003	119,985	490,311	1,202,168
Services and supplies	316,598	433,843	240,628	991,069	-
Depreciation and amortization	138,038	544,653	353,041	1,035,732	-
Total operating expenses	1,345,575	1,440,625	1,004,694	3,790,894	1,202,168
Operating income (loss)	(4,945)	(220,293)	762,315	537,077	(186,911)
Nonoperating revenues (expenses)					
Interest income	49,145	365	1,216	50,726	-
Impact fees	25,159	12,851	-	38,010	-
Grant revenue	238,048	816,491	307,203	1,361,742	159,918
Miscellaneous income	13,831	7,764	24,917	46,512	-
Contributions from component unit for debt payments	10,584	-	-	10,584	-
Interest expense	(68,674)	(66,239)	(16,766)	(151,679)	-
Total nonoperating revenues (expenses)	268,093	771,232	316,570	1,355,895	159,918
Change in net position	263,148	550,939	1,078,885	1,892,972	(26,993)
Total net position, beginning	3,612,390	8,085,069	4,326,322	16,023,781	175,436
Total net position, end of year	$ 3,875,538	$ 8,636,008	$ 5,405,207	$ 17,916,753	$ 148,443

The accompanying notes are an integral part of the financial statements.

CITY OF WEST WENDOVER, NEVADA
Statement of Cash Flows
Proprietary Funds
For the Year Ended June 30, 2022

	Water Fund	Sewer Fund	Garbage/ Compost Fund	Total Proprietary Funds	Health Insurance Internal Service Fund
Cash Flows From Operating Activities:					
Cash received from customers, service fees	$ 1,384,294	$ 1,262,298	$ 1,758,171	$ 4,404,763	$ 1,015,257
Cash paid to suppliers	(870,814)	(445,036)	(232,625)	(1,548,475)	(1,202,655)
Cash paid to employees	(360,246)	(500,749)	(452,788)	(1,313,783)	-
Net cash flows from operating activities	153,234	316,513	1,072,758	1,542,505	(187,398)
Cash Flows From Noncapital Financing Activities:					
Net component unit receipts/(payments)	110,735	-	-	110,735	-
Cash received from miscellaneous sources	13,831	7,766	24,917	46,514	-
Net cash flows from noncapital financing activities	124,566	7,766	24,917	157,249	-
Cash Flows From Capital and Related Financing Activities:					
Impact fees	25,159	12,851	-	38,010	-
Grant revenue	238,048	816,491	307,203	1,361,742	159,918
Principal paid on capital debt	(186,187)	(125,124)	(77,334)	(388,645)	-
Interest paid on capital debt	(68,674)	(66,239)	(16,766)	(151,679)	-
Acquisition and construction of capital assets	(9,526)	(9,524)	(9,525)	(28,575)	-
Net cash flows from capital and related financing activities	(1,180)	628,455	203,578	830,853	159,918
Cash Flows From Investing Activities:					
Interest income	49,145	365	1,216	50,726	-
Net change in cash and cash equivalents	325,765	953,099	1,302,469	2,581,333	(27,480)
Cash and investments, including restricted cash, beginning of year as restated	1,773,023	268,607	2,157,615	4,199,245	178,162
Cash and Cash Equivalents, Including Restricted Cash , End of Year	$ 2,098,788	$ 1,221,706	$ 3,460,084	$ 6,780,578	$ 150,682
Reconciliation of operating income to net cash flows from operating activities:					
Operating income (loss)	$ (4,945)	$ (220,293)	$ 762,315	$ 537,077	$ (186,911)
Adjustments to reconcile net income (loss) to net cash from operating activities					
Depreciation/amortization	138,038	544,653	353,041	1,035,732	-
Pension expense	(612)	7,221	2,091	8,700	-
Employer pension contributions	(34,565)	(45,250)	(40,842)	(120,657)	-
Changes in operating assets and liabilities:					
(Increase) decrease in receivables	43,064	41,966	(8,838)	76,192	-
(Increase) decrease in inventory	7,631	-	-	7,631	-
(Increase) decrease in prepaid expenses	20	-	(552)	(532)	(3,351)
Increase (decrease) in accounts payable	5,363	(11,193)	8,555	2,725	2,864
Increase (decrease) in due from deposits	600	-	-	600	-
Increase (decrease) in compensated absences	(1,360)	(591)	(3,012)	(4,963)	-
Net cash flows from operating activities	$ 153,234	$ 316,513	$ 1,072,758	$ 1,542,505	$ (187,398)

The accompanying notes are an integral part of the financial statements.

NOTE 1. Summary of Significant Accounting Policies

Description of government-wide financial statements

The government-wide financial statements (i.e., the statement of net position and the statement of activities) report information on all of the nonfiduciary activities of the primary government and its component units. All fiduciary activities are reported only in the fund financial statements. *Governmental activities*, which normally are supported by taxes, intergovernmental revenues, and other nonexchange transactions, are reported separately from *business-type activities*, which rely to a significant extent on fees and charges to external customers for support. Likewise, the *primary government* is reported separately from certain legally separate *component units* for which the primary government is financially accountable.

Reporting Entity

The City of West Wendover (government) is a municipal corporation governed by an elected mayor and five-member governing council (council). The accompanying financial statements present the government and its component units, entities for which the government is considered to be financially accountable. Blended component units are, in substance, part of the primary government's operations, even though they are legally separate entities. Thus, blended component units are appropriately presented as funds of the primary government. Each discretely presented component unit is reported in a separate column in the government-wide financial statements to emphasize that it is legally separate from the government.

Discretely presented component units - The Johnson Springs Water System Enterprise Fund (Johnson Springs) was formed by a settlement agreement between the City of West Wendover, Nevada and the City of Wendover, Utah to replace Administrative Authority upon its dissolution (dissolved on December 31, 2008). Johnson Springs has no board. The net assets of the Administrative Authority were transferred to Johnson Springs on January 1, 2009, including the debt of the Administrative Authority that is in the name of the City. It is a separate enterprise fund and is considered a component unit due to the City's responsibility to perform all management, maintenance and accounting duties for the fund.

Basis of presentation – government-wide financial statements

While separate government-wide and fund financial statements are presented, they are interrelated. The governmental activities column incorporates data from governmental funds and internal service funds, while business-type activities incorporate data from the government's enterprise funds. Separate financial statements are provided for governmental funds, proprietary funds, and fiduciary funds, even though the latter are excluded from the government-wide financial statements.

As discussed earlier, the city has one discretely presented component units, Johnson Springs, which is considered a major component unit and is shown in separate columns in the government-wide financial statements.

As a general rule, the effect of interfund activity has been eliminated from the government-wide financial statements.

NOTE 1. Summary of Significant Accounting Policies, Continued

Basis of presentation – fund financial statements

The fund financial statements provide information about the government's funds, including its fiduciary funds and blended component units if any. Separate statements for each fund category—governmental, proprietary, and fiduciary—are presented. The emphasis of fund financial statements is on major governmental and enterprise funds, each displayed in a separate column. All remaining governmental and enterprise funds are aggregated and reported as nonmajor funds. Major individual governmental and enterprise funds are reported as separate columns in the fund financial statements.

The government reports the following major governmental funds:

The **General Fund** is the government's primary operating fund. It accounts for all financial resources of the general government, except those accounted for in another fund.

The **Recreation Fund** is used to account for the City's share of room tax proceeds and the distribution of those funds to the recreation district.

The **Capital Projects Fund** is used to account for the acquisition or construction of capital facilities as outlined in Resolution 1997-14.

The government reports the following major enterprise funds:

The **Water Fund** accounts for the provision of water services to the residents of the City. All activities necessary to provide such services are accounted for in this fund, including, but not limited to, administration, operation, maintenance, financing and related debt service and billing and collection.

The **Sewer Fund** accounts for the provision of sewer services to the residents of the City. All activities necessary to provide such services are accounted for in this fund, including, but not limited to, administration, operation, maintenance, financing and related debt service and billing and collection.

The **Garbage/Compost Fund** is used to account for the provision of sanitation services to residents of the City. All activities necessary to provide such services are accounted for in this fund, including, but not limited to, administration, operation, maintenance, financing and related debt service and billing and collection.

Additionally, the City reports the following fund types:

Health Insurance Internal Service Fund – Internal Service Funds are used to account for the financing of goods and services provided by one department or agency to other departments or agencies of the government and to other government units, on a cost reimbursement basis.

NOTE 1. Summary of Significant Accounting Policies, Continued

During the course of operations the government has activity between funds for various purposes. Any residual balances outstanding at year end are reported as due from/to other funds and advances to/from other funds. While these balances are reported in fund financial statements, certain eliminations are made in the preparation of the government-wide financial statements. Balances between the funds included in governmental activities (i.e., the governmental funds) are eliminated so that only the net amount is included as internal balances in the governmental activities column. Similarly, balances between the funds included in business-type activities (i.e., the enterprise funds) are eliminated so that only the net amount is included as internal balances in the business-type activities column.

Further, certain activity occurs during the year involving transfers of resources between funds. In fund financial statements these amounts are reported at gross amounts as transfers in/out. While reported in fund financial statements, certain eliminations are made in the preparation of the government-wide financial statements. Transfers between the funds included in governmental activities are eliminated so that only the net amount is included as transfers in the governmental activities column. Similarly, balances between the funds included in business-type activities are eliminated so that only the net amount is included as internal balances in the business-type activities column.

Measurement focus and basis of accounting

The accounting and financial reporting treatment is determined by the applicable measurement focus and basis of accounting. Measurement focus indicates the type of resources being measured such *as current financial resources* or *economic resources*. The basis of accounting indicates the timing of transactions or events for recognition in the financial statements.

The government-wide financial statements are reported using the *economic resources measurement* focus and the *accrual basis of accounting*. Revenues are recorded when earned and expenses are recorded when a liability is incurred, regardless of the timing of related cash flows. Property taxes are recognized as revenues in the year for which they are levied. Grants and similar items are recognized as revenue as soon as all eligibility requirements imposed by the provider have been met.

The governmental fund financial statements are reported using the *current financial resources measurement* focus and the *modified accrual basis of accounting*. Revenues are recognized as soon as they are both measurable and available. Revenues are considered to be available when they are collectible within the current period or soon enough thereafter to pay liabilities of the current period. For this purpose, the government considers revenues to be available if they are collected within 60 days of the end of the current fiscal period. Expenditures generally are recorded when a liability is incurred, as under accrual accounting. However, debt service principal and interest expenditures on general long-term debt, including lease liabilities as well as expenditures related to compensated absences, and claims and judgments, postemployment benefits and environmental obligations are recognized later based on specific accounting rules applicable to each, generally when payment is due. General capital asset acquisitions, including entering into contract giving the City the right to use leased assets, are reported as expenditures in governmental funds. Issuance of long-term debt and acquisitions under leases are reported as other financing sources.

NOTE 1. Summary of Significant Accounting Policies, Continued

Property taxes, franchise taxes, licenses, and interest associated with the current fiscal period are all considered to be susceptible to accrual and so have been recognized as revenues of the current fiscal period. Entitlements are recorded as revenues when all eligibility requirements are met, including any time requirements, and the amount is received during the period or within the availability period for this revenue source (within 60 days of yearend). Expenditure-driven grants are recognized as revenue when the qualifying expenditures have been incurred and all other eligibility requirements have been met, and the amount is received during the period or within the availability period for this revenue source (within 60 days of yearend). All other revenue items are considered to be measurable and available only when cash is received by the government.

The proprietary funds are reported using the *economic resources measurement* focus and the *accrual basis of accounting*.

Assets, liabilities, deferred outflows/inflows of resources, and net position/fund balance

Cash and cash equivalents

The government's cash and cash equivalents are considered to be cash on hand, demand deposits, and short-term investments with original maturities of three months or less from the date of acquisition.

Investments

Investments for the government are reported at fair value (generally based on quoted market prices). The City of West Wendover invests in the State of Nevada Local Government Investment Pool, which has regulatory oversight from the Board of Finance for the State of Nevada.

State statues authorize the City to invest in obligations of the U.S. Treasury; certain farm loan bonds; certain securities issued by Nevada local governments and other state and local governments; certain repurchase agreements; certain bankers acceptances; certain commercial paper; and certain negotiable certificates of deposits and money market mutual funds, as well as the State of Nevada Local Government Investment Pool.

Inventories and prepaid items

Inventories for the general and proprietary funds are valued at cost using the first-in/first-out (FIFO) method and consist of expendable office supplies, pipe, fittings and miscellaneous automobile parts. The cost of such inventories is recorded as expenditures/expenses when consumed rather than when purchased.

For all other funds, the City of West Wendover charges consumable supplies against appropriations at the time of purchase. Any inventories of such supplies at June 30 are not material to the individual funds and are not recognized in the financial statements.

NOTE 1. Summary of Significant Accounting Policies, Continued

Certain payments to vendors reflect costs applicable to future accounting periods and are recorded as prepaid items in both the government-wide and fund financial statements. The cost of prepaid items is recorded as expenditures/expenses when consumed rather than when purchased

Capital assets

Capital assets are tangible and intangible assets, which include property, plant, equipment, and infrastructure assets (e.g. roads, bridges, sidewalks, and similar items), are reported in the applicable governmental or business-type activities column in the government-wide financial statements. Capital assets are defined by the government as assets with an initial, individual cost of more than $5,000 and an estimated useful life in excess of two years.

The City has elected not to record infrastructure assets prior to July 1, 2003 as allowed by Governmental Accounting Statement number 34 for phase 3 governments.

As the government constructs or acquires additional capital assets each period, including infrastructure assets, they are capitalized and reported at historical cost (except for intangible right-to-use assets, the measurement of which is discussed in note 8). The reported value excludes normal maintenance and repairs which are essentially amounts spent in relation to capital assets that do not increase the capacity or efficiency of the item or increase its estimated useful life. Donated capital assets are recorded at their estimated acquisition value at the date of donation.

Interest incurred during the construction phase of capital assets of enterprise funds is included as part of the capitalized value of the assets constructed. The amount of interest capitalized depends on the specific circumstances.

Land and construction in progress are not depreciated. The other property, plant, equipment, and infrastructure of the primary government are depreciated using the straight line method over the following estimated useful lives:

Building	35 to 50 years
Improvements other than buildings	20 to 30 years
Machinery, equipment, and vehicles	3 to 10 years
Utility systems	10 to 50 years

Deferred outflows/inflows of resources

In addition to assets, the statement of financial position will sometimes report a separate section for deferred outflows of resources. This separate financial statement element, *deferred outflows of resources*, represents a consumption of net position that applies to a future period(s) and so will not be recognized as an outflow of resources (expense/ expenditure) until then. The City has one item that qualifies for reporting in this category which is pension related items reported on the government-wide financial statements. See footnote 17 for more information.

NOTE 1. Summary of Significant Accounting Policies, Continued

In addition to liabilities, the statement of financial position will sometimes report a separate section for deferred inflows of resources. This separate financial statement element, *deferred inflows of resources*, represents an acquisition of net position that applies to a future period(s) and so will not be recognized as an inflow of resources (revenue) until that time. The City has two types of items that qualify for reporting in this category which are pension and lease related items reported on the government-wide financial statements. See footnote 17 and 8 for more information, respectively. The governmental funds report unearned revenues from two sources: advance payments for business licenses and advance payments for gaming licenses. These amounts are deferred and recognized as an inflow of resources in the period that the amounts available. In the government-wide financial statements the City reports deferred amounts related to leases and deferred amounts related to pension and OPEB.

Net position flow assumption

Sometimes the government will fund outlays for a particular purpose from both restricted (e.g., restricted bond or grant proceeds) and unrestricted resources. In order to calculate the amounts to report as restricted – net position and unrestricted – net position in the government-wide and proprietary fund financial statements, a flow assumption must be made about the order in which the resources are considered to be applied. It is the government's policy to consider restricted – net position to have been depleted before unrestricted – net position is applied.

Fund balance flow assumptions

Sometimes the government will fund outlays for a particular purpose from both restricted and unrestricted resources (the total of committed, assigned, and unassigned fund balance). In order to calculate the amounts to report as restricted, committed, assigned, and unassigned fund balance in the governmental fund financial statements a flow assumption must be made about the order in which the resources are considered to be applied. It is the government's policy to consider restricted fund balance to have been depleted before using any of the components of unrestricted fund balance. Further, when the components of unrestricted fund balance can be used for the same purpose, committed fund balance is depleted first, followed by assigned fund balance. Unassigned fund balance is applied last.

Fund balance policies

Fund balance of governmental funds is reported in various categories based on the nature of any limitations requiring the use of resources for specific purposes. The government itself can establish limitations on the use of resources through either a commitment (committed fund balance) or an assignment (assigned fund balance).

The committed fund balance classification includes amounts that can be used only for the specific purposes determined by a formal action of the government's highest level of decision-making authority. The governing council is the highest level of decision-making authority for the government that can, by adoption of an ordinance prior to the end of the fiscal year, commit fund balance. Once adopted, the limitation imposed by the ordinance remains in place until a similar action is taken (the adoption of another ordinance) to remove or revise the limitation.

NOTE 1. Summary of Significant Accounting Policies, Continued

Amounts in the assigned fund balance classification are intended to be used by the government for specific purposes but do not meet the criteria to be classified as committed. The city council (council) has by resolution authorized the Mayor, City Manager, and Chief Financial Officer to assign fund balance. The council may also assign fund balance as it does when appropriating fund balance to cover a gap between estimated revenue and appropriations in the subsequent year's appropriated budget. Unlike commitments, assignments generally only exist temporarily. In other words, an additional action does not normally have to be taken for the removal of an assignment. Conversely, as discussed above, an additional action is essential to either remove or revise a commitment.

Leases

The City is a lessor for a noncancellable lease of a building. The City recognizes a lease receivable and a deferred inflow of resources in the government-wide and governmental fund financial statements. At the commencement of a lease, the City initially measures the lease receivable at the present value of payments expected to be received during the lease term.

Subsequently, the lease receivable is reduced by the principal portion of lease payments received. The deferred inflow of resources is initially measured as the initial amount of the lease receivable, adjusted for lease payments received at or before the lease commencement date.

Subsequently, the deferred inflow of resources is recognized as revenue over the life of the lease term.
Key estimates and judgments include how the City determines (1) the discount rate it uses to discount the expected lease receipts to present value, (2) lease term, and (3) lease receipts.

- The City uses its estimated incremental borrowing rate as the discount rate for leases.
- The lease term includes the noncancellable period of the lease. Lease receipts included in the measurement of the lease receivable is composed of fixed payments from the lessee.

The City monitors changes in circumstances that would require a remeasurement of its lease, and will remeasure the lease receivable and deferred inflows of resources if certain changes occur that are expected to significantly affect the amount of the lease receivable.

Revenues and Expenditures/Expenses

Program revenues

Amounts reported as program revenues include 1) charges to customers or applicants who purchase, use, or directly benefit from goods, services, or privileges provided by a given function or segment and 2) grants and contributions (including special assessments) that are restricted to meeting the operational or capital requirements of a particular function or segment. All taxes, including those dedicated for specific purposes, and other internally dedicated resources are reported as general revenues rather than as program revenues.

NOTE 1. Summary of Significant Accounting Policies, Continued

Property taxes

All real property within the City of West Wendover is assigned a parcel number by the Elko County Assessor in accordance with state law, with each parcel being subject to physical reappraisal every five years. A factoring system is used to adjust the appraised value during the years between physical appraisals. The property and its improvements are assessed at 35% of "taxable value" as defined by statute. The amount of tax levied is developed by multiplying the assessed value by the tax rate applicable to the area in which the property is located. The maximum tax rate was established in the State Constitution at $5 per $100 of assessed valuation; however, as a result of legislative action, the tax rate was further limited to $3.64 per $100 as assessed valuation, except in cases of severe financial emergency as defined by NRS 354.705. Taxes on real property are a lien on the property and attach on July 1 of the year for which the taxes are levied.

Taxes may be paid in four installments, the first installment is due on the third Monday of August and the remaining three installments are payable on the first Monday in October, January and March to the Treasurer of Elko County in which the City of West Wendover is located. Penalties are assessed if a taxpayer fails to pay an installment within ten days of the installment due date. After a two year waiting period, if the taxes remain unpaid, a tax deed is issued conveying the property to the County with a lien for back taxes and accumulated charges. Redemption may be made by the owner or such persons as described by statute by paying all back taxes and accumulated penalties, interest and costs before sale.

Taxes on personal property are collected currently. Personal property declarations are mailed out annually by the County and the tax is computed using percentages of taxable values established by the Department of Taxation and the tax rates described above.

Compensated absences

Vacation and Sick-leave

The city's policy permits employees to accumulate earned but unused vacation benefits, which are eligible for payment upon separation from government service. The liability for such leave is reported as incurred in the government-wide and proprietary fund financial statements. A liability for those amounts is recorded in the governmental funds only if the liability has matured as a result of employee resignations or retirements.

Per City Policy and Collective Bargaining Agreements, employees earn (accrue) sick leave benefits which they are eligible to receive upon separation of service at a determined percentage based upon total years of service and based upon the required notice of separation.

NOTE 1. Summary of Significant Accounting Policies, Continued

Proprietary funds operating and non-operating revenues and expenses

Proprietary funds distinguish *operating* revenues and expenses from *non-operating* items. Operating revenues and expenses generally result from providing services and producing and delivering goods in connection with a proprietary fund's principal ongoing operations. The principal operating revenues of the water fund, sewer fund, and garbage/compost facility fund are charges to customers for sales and services. Operating expenses for enterprise funds include the cost of sales and services, administrative expenses, and depreciation on capital assets. All revenues and expenses not meeting this definition are reported as non-operating revenues and expenses.

Use of Estimates

The preparation of financial statements in conformity with accounting principles generally accepted in the United States of America requires management to make estimates and assumptions that affect the reported amounts of assets and liabilities and disclosure of contingent assets and liabilities at the date of the financial statements and the reported amounts of revenues and expenditures/expenses during the reporting period. Actual results could differ from those estimates.

Pensions

For purposes of measuring the net pension liability, deferred outflows of resources and deferred inflows of resources related to pensions, and pension expense, information about the pension plan's fiduciary net position of the Public Employees' Retirement System of Nevada (PERS) and additions to/deductions from the plan's fiduciary net position have been determined on the same basis as they are reported by PERS. For this purpose, benefit payments (including refunds of employee contributions) are recognized when due and payable in accordance with the benefit terms. Investments are reported at fair value.

Comparative Data

Comparative data shown for the prior year has been extracted from the 2020-2021 financial statements and reclassified where necessary. It has been provided to add comparability but is not considered full disclosure of transactions for 2020-2021. Such information can only be obtained by referring to the audited financial statements for that year.

New Pronouncements

For the year ended June 30, 2022, the City implemented the provisions of GASB Statement No. 87, Leases. GASB Statement No. 87 improves accounting and financial reporting for leases by governments. This Statement requires recognition of certain lease assets and liabilities for leases that previously were classified as operating leases and recognized as inflows of resources or outflows of resources based on the payment provisions of the contract. The Statement also establishes a single model for lease accounting based on the foundational principle that leases are financings of the right to use an underlying asset.

NOTE 2. Reconciliation of Government-Wide and Fund Financial Statements

The governmental fund balance sheet includes reconciliation between total governmental fund balances and net position of governmental activities as reported in the government-wide statement of net position. This difference primarily results from the long-term economic focus of the statement of net position versus the current financial resources focus of the governmental fund balance sheets. The details of these differences are reported in the reconciliation on as listed in the table of contents.

The governmental fund statement of revenues, expenditures, and changes in fund balance includes a reconciliation between net changes in fund balances-total governmental funds and changes in net position of governmental activities as reported in the government-wide statement of activities. These differences are the result of converting from the current resources measurement focus and modified accrual basis for governmental fund statements to the economic resources measurement focus and full accrual basis used for government-wide statements. The details of these differences are reported in the reconciliation as listed in the table of contents.

NOTE 3. Stewardship, Compliance, and Accountability

Budgets and Budgetary Accounting

The City adheres to the Local Government Budget Act incorporated in Section 354 of the Nevada Revised Statutes. The provision of the Act included the following major procedures to establish the budgetary data which is reflected in these financial statements.

a. On or before April 15, the City Council files a tentative budget with the Nevada Department of Taxation for all funds.

b. Public budget hearings on the tentative budget are held on the third Tuesday of May.

c. On or before June 1, at a public hearing, the City Council indicates changes, if any, to be made to the tentative budget must then be forwarded to the Nevada Department of Taxation for the final review and approval.

d. Formal budgetary integration in the financial records of all funds is employed to enhance management control during the year.

e. Budgets for all funds are adopted on a basis consistent with generally accepted accounting principles (GAAP). All appropriations lapse at year end.

f. Budget amounts within funds, and between funds, may be transferred if amounts do not exceed the original budget. Such transfers must be approved by the budget officer and/or City Council, depending on established criteria. Budget augmentations in excess of original budgetary amounts may only be made with prior approval of the City Council, following a scheduled and noticed public hearing for those funds which have ad valorem taxes allocated as a source of revenue. For all other funds, the City Council must approve the budget augmentation with a majority vote and adopt a resolution providing therefore.

g. The above dates may be adjusted as necessary during legislative years.

h. The budget amounts reflected in the financial statements have been amended from the original amounts in accordance with the approved procedures.

i. In accordance with state statute, actual expenditures may not exceed budgeted appropriations of the various governmental functions (excluding the debt services functions) in the General Fund and total expenditures in other governmental funds. Per NRS 354.626, expenditures over budgeted appropriations are allowed for bond repayments, medium term obligation repayments and long-term contracts expressly authorized by law.

NOTE 4. Cash and Investments

A reconciliation of cash deposits and investments to the government-wide statement of net position as follows:

	Primary Government	Component Unit
Deposits:		
Cash on hand	$ 1,575	$ -
Cash in bank	11,306,380	(836,451)
Investments:		
Nevada local government investment pool	1,520,947	1,396,053
Total deposits and investments	$ 12,828,903	$ 559,602
Cash and cash equivalents	$ 11,620,755	$ 559,602
Restricted cash	1,208,148	-
	$ 12,828,903	$ 559,602

Deposits

Custodial Credit Risk

For deposits this is the risk that in the event of a bank failure, the government's deposit may not be returned. The City does not have a formal policy for custodial credit risk. As of June 30, 2022, $0 of the primary government and component unit's combined bank balance of $10,655,181 was exposed to custodial credit risk because it was either fully insured by FDIC insurance or collateralized by a pledging financial institution.

Investments

The Nevada State Treasurer's Office operates the Local Government Investment Pool (LGIP). The LGIP is an external investment pool operated by the Nevada Public Treasurer.

The LGIP is not registered with the SEC as an investment company. Deposits in the LGIP are not insured or otherwise guaranteed by the State of Nevada, and participants share proportionally in any realized gain or losses on investments.

The provisions of State Law (NRS 355.170) govern the investment of public funds as noted in Footnote 1.

NOTE 4. Cash and Investments, Continued

As of June 30, 2022 the government had the following investments:

Investment Type	Primary Government Fair Value	Component Unit Fair Value	Rating (1)	Weighted Average Maturity (2)
Nevada Local Government Pooled Investment Fund	$ 1,520,947	$ 1,396,053	N/A	125
Total Fair Value	$ 1,520,947	$ 1,396,053		

(1) Ratings are provided where applicable to indicate associated Credit Risk. N/A indicates not applicable.

(2) Interest Rate Risk is estimated using the weighted average days to maturity.

The City categorizes its fair value measurements within the fair value hierarchy established by generally accepted accounting principles. The hierarchy is based on the valuation inputs used to measure the fair value of the asset. Level 1 inputs are quoted prices in active markets for identical assets; Level 2 inputs are significant other observable inputs; Level 3 inputs are significant unobservable inputs.

The City has the following recurring fair value measurements as of June 30, 2022:

- Nevada Local Government's Investment Pool (LGIP):

	Primary Government	Component Unit
Level 1 inputs	$ 449,592	$ 412,673
Level 2 inputs	1,071,355	983,380
Total LGIP investment	$ 1,520,947	$ 1,396,053

Interest Rate Risk

Interest rate risk is the risk that changes in interest rates will adversely affect the fair value of an investment. The City's policy for managing its exposure to fair value loss arising from increasing interest rates is to comply with the provisions of State law (NRS 355.170).

Credit Risk

Credit risk is the risk that an issuer or other counterparty to an investment will not fulfill its obligations. The primary government and component unit's policy for reducing its exposure to credit risk is to limit its investments to the Nevada Local Government Investment Pool and to comply with State Law (NRS 355.170). The Nevada Local Government Investment Pool is unrated.

Concentration of Credit Risk

The Primary Government and the Component Unit place no limit on the amount the Primary Government or the Component Unit may invest in any one issue.

NOTE 4. Cash and Investments, Continued

Cash Restricted for Special Uses

The primary government and the component unit maintain restricted cash to comply with various legal and contractual requirements. Amounts restricted are as follows at June 30, 2022:

Restricted cash footnote

Medium Term Sales Tax Revenue Bond Reserves	$	313,500
Closure / post closure trust funds		145,000
Waste Water Treatment Plant Revenue Bond Reserves		120,784
Water Revenue Bonds, Series 2015 Bond Reserves		21,168
Water Rev Bonds Series 2015 - Asset Replacement		143,170
AB198 Capital Replacement Projects Fund		464,086
Unutilized Regional Transportation Commission Funds		440
Total restricted cash - primary government	$	1,208,148

NOTE 5. Receivables / Due from other Governments

Receivables in the governmental funds consist principally of room and franchise taxes due various businesses. Amounts due from other governments consist primarily of taxes due from the State of Nevada and grant revenues due from various granting agencies. All receivables and amounts due from other governments are considered by management to be fully collectible and therefore, no allowance for doubtful accounts is necessary.

Receivables in the proprietary funds represent service billings to customers and are shown net of an allowance for doubtful accounts. The allowance for doubtful accounts is estimated based on professional judgement and historical information. The allowances for doubtful accounts at June 30, 2022 were as follows:

Water Fund	$	-
Sewer Fund		-
Garbage/Compost Fund		-
Johnson Springs		-
	$	-

NOTE 6. Capital Assets

Governmental capital asset activity for the year ended June 30, 2022 was as follows:

Governmental Activities:	Balance 6/30/21	Additions	Deletions	Balance 6/30/22
Capital assets, not being depreciated:				
Land	$ 1,416,475	$ -	$ -	$ 1,416,475
Construction in progress	357,046	1,950,927	(320,155)	1,987,818
Total capital assets, not being depreciated	1,773,521	1,950,927	(320,155)	3,404,293
Capital assets, being depreciated:				
Buildings	11,215,109	-	-	11,215,109
Other improvements	14,315,356	-	-	14,315,356
Machinery and equipment	3,205,604	238,117	-	3,443,721
Total capital assets, being depreciated	28,736,069	238,117	-	28,974,186
Less accumulated depreciation for:				
Buildings	(3,798,936)	(278,673)	-	(4,077,609)
Other improvements	(4,939,866)	(512,289)	-	(5,452,155)
Machinery and equipment	(2,857,142)	(127,508)	-	(2,984,650)
Total accumulated depreciation	(11,595,944)	(918,470)	-	(12,514,414)
Total capital assets, being depreciated, net	17,140,125	(680,353)	-	16,459,772
Governmental activities capital assets, net	$ 18,913,646	$ 1,270,574	$ (320,155)	$ 19,864,065

Depreciation expense was charged to the functions/programs of the City as follows:

Governmental Activities:	
General government	$ 530,503
Judicial	9,861
Public safety	95,575
Public works	2,023
Health and sanitation	25,339
Culture and recreation	96,371
Community support	1,126
Streets and highways	157,672
Total depreciation expense - governmental activities	$ 918,470

NOTE 6. Capital Assets, Continued

Business-type capital asset activity for the year ended June 30, 2022 was as follows:

Business-Type Activities:	Balance 6/30/21	Additions	Deletions	Balance 6/30/22
Capital assets not being depreciated:				
Land	$ 111,000	$ -	$ -	$ 111,000
Total capital assets, not being depreciated	111,000	-	-	111,000
Capital assets being depreciated:				
Buildings	3,986,869	-	-	3,986,869
Other improvements	6,215,836	-	-	6,215,836
Machinery and equipment	4,656,948	28,575	-	4,685,523
Utility systems	18,053,021	-	-	18,053,021
Total capital assets, being depreciated	32,912,674	28,575	-	32,941,249
Less accumulated depreciation for:				
Buildings	(738,660)	(99,843)	-	(838,503)
Other improvements	(4,078,303)	(221,739)	-	(4,300,042)
Machinery and equipment	(3,785,076)	(177,551)	-	(3,962,627)
Utility systems	(7,639,379)	(536,598)	-	(8,175,977)
Total accumulated depreciation	(16,241,418)	(1,035,731)	-	(17,277,149)
Total capital assets, being depreciated, net	16,671,256	(1,007,156)	-	15,664,100
Business-type activities capital asset, net	$ 16,782,256	$ (1,007,156)	$ -	$ 15,775,100

Depreciation expense was charged to the functions/programs of the City as follows:

Business-Type Activities:	
Water Fund	$ 138,038
Sewer Fund	544,652
Combined Garbage / Compost Facility Fund	353,041
Total depreciation expense - business-type activities	$ 1,035,731

NOTE 6. Capital Assets, Continued

Component unit capital asset activity for the year ended June 30, 2022 was as follows:

Component Unit - Johnson Springs	Balance 06/30/21	Additions	Deletions	Balance 06/30/22
Capital assets not being depreciated:				
Land	$ 18,000	$ -	$ -	$ 18,000
Total capital assets, not being depreciated	18,000	-	-	18,000
Capital assets being depreciated:				
Buildings	6,836,936	-	-	6,836,936
Other improvements	411,632	-	-	411,632
Machinery and equipment	571,254	9,525	-	580,779
Utility system	5,316,197	-	-	5,316,197
Total capital assets, being depreciated	13,136,019	9,525	-	13,145,544
Less accumulated depreciation for:				
Buildings	(4,826,857)	(217,145)	-	(5,044,002)
Other improvements	(198,161)	(19,413)	-	(217,574)
Machinery and equipment	(433,640)	(22,732)	-	(456,372)
Water utility system	(2,155,902)	(133,213)	-	(2,289,115)
Total accumulated depreciation	(7,614,560)	(392,503)	-	(8,007,063)
Total capital assets, being depreciated, net	5,521,459	(382,978)	-	5,138,481
Johnson Springs component unit fund activities capital assets, net	$ 5,539,459	$ (382,978)	$ -	$ 5,156,481

NOTE 7. Long-Term Liabilities

The following is a summary of long-term liabilities for the year ended June 30, 2022:

Long-Term Debt	Date of Issue	Interest Rate	Orriginal Amount of Issue	June 30, 2021	Additions	Retirements	June 30, 2022	Current Portion
Governmental Activities								
Direct Placement Bonds Payable:								
Medium Term Sales Tax Revenue Bond, Series 2009 (City Hall)	8/18/2009	4.38%	5,225,000	$ 3,914,449	$ -	$ (145,119)	$ 3,769,330	$ 151,597
General Obligation Medium-Term Bonds, Series 2015	7/14/2015	2.26%	2,200,000	1,109,000	-	(241,000)	868,000	250,000
Consolidated Tax Revenue Interim Debenture Bond, Series 2022	3/30/2022	3.48%	8,906,800	-	855,253	-	855,253	-
Total direct placement bonds payable				5,023,449	855,253	(386,119)	5,492,583	401,597
Total Bonds Payable				5,023,449	855,253	(386,119)	5,492,583	401,597
Other Liabilities								
Compensated absences				309,930	279,340	(243,103)	346,167	244,000
Net pension liability				6,564,675	-	(2,219,044)	4,345,631	-
Total governmental long-term liabilities				$ 11,898,054	$ 1,134,593	$ (2,848,266)	$ 10,184,381	$ 645,597

For governmental activities, compensated absences and net position liabilities are generally liquidated through the General Fund.

NOTE 7. Long-Term Liabilities, continued

Long-Term Debt	Date of Issue	Interest Rate	Orriginal Amount of Issue	June 30, 2021	Additions	Retirements	June 30, 2022	Current Portion
Business-Type Activities								
Public Offerings Bonds:								
Waste Water Treatment Plant Revenue Bond	6/1/2012	2.75%	2,637,000	2,242,024	-	(47,789)	2,194,235	49,117
Total business-type public offering bonds payable				2,242,024	-	(47,789)	2,194,235	49,117
Direct Placement Bonds Payable:								
General Obligation Limited Tax Water Bonds, Series 2019	8/15/2019	2.16%	2,173,729	2,027,196		(96,457)	1,930,739	98,552
General Obligation Limited Tax Medium-Term, Series 2014	6/17/2017	2.43%	2,100,000	728,000	-	(232,000)	496,000	243,000
Water Revenue Bonds, Series 2015	10/8/2015	2.63%	747,000	684,343	-	(12,397)	671,946	12,725
Total business-type direct placement bonds payable				3,439,539	-	(340,854)	3,098,685	354,277
Total business-type long-term debt				5,681,563	-	(388,643)	5,292,920	403,394
Direct Placement Notes payable:								
2019 Hook Lift - Compost/Garbage	9/19/2019	2.36%	464,990	330,788		(91,756)	239,032	120,933
2018 Caterpillar Wheel Loader Compost	1/18/2018	4.20%	231,738	106,081	-	(32,223)	73,858	73,858
Total notes payable				436,869	-	(123,979)	312,890	194,791
Other Liabilities								
Net pension liability				1,420,026	-	(449,001)	971,025	-
Compensated absences				28,269	17,212	(22,174)	23,307	23,307
Total business-type long-term liabilities				$ 7,566,727	$ 17,212	$ (983,797)	$ 6,600,142	$ 621,492
Component Unit								
Johnson Springs								
Other Liabilities								
Net pension liability				121,309	-	(47,961)	73,348	-
Compensated absences				9,848	7,428	(7,132)	10,144	10,144
Total Component Unit long-term liabilities				$ 131,157	$ 7,428	$ (55,093)	$ 83,492	$ 10,144

NOTE 7. Long-Term Liabilities, Continued

Revenue Bonds

The City has pledged future net revenues from the City's Municipal Water System to repay $2,173,729 and $747,000 in water revenue bonds issued in November 1998 and 2019, respectively, with interest rates of 2.16% and 2.63%, respectively. Proceeds from the bonds provided financing to pay for the cost to acquire, improve, construct, equip, operate, and maintain a water project for the City. The bonds are payable solely from net revenues from the Municipal Water System and are payable through 2039 and 2056.

The City has pledged future net revenues from the City's Sewer Facility to repay $2,637,000 in sewer revenue bonds issued in June 2012 with an interest rate of 2.75%. Proceeds from the bonds provided financing for the construction of a new sewer facility. The bonds are payable solely from future net revenues from the Sewer Facility and are payable through 2052.

The following schedules reflect debt service requirements to maturity of the City's debt as of June 30, 2022:

Year Ending June 30,	Governmental Activities		Business-Type Activities					
	Direct Placement Bonds		Public Offering Bonds		Direct Placement Bonds		Direct Placement Notes	
	Principle	Interest	Principle	Interest	Principle	Interest	Principle	Interest
2023	$ 1,256,850	$ 178,695	$ 49,117	$ 59,847	354,277	70,742	194,791	8,192
2024	356,938	167,280	50,323	58,641	366,708	62,406	96,164	2,860
2025	371,414	155,228	51,880	57,084	116,287	53,680	21,935	577
2026	385,798	143,109	53,321	55,643	118,876	51,091	-	-
2027	180,511	132,989	54,803	54,161	121,524	48,443	-	-
2028-2032	1,030,120	537,289	297,437	247,384	649,367	200,467	-	-
2033-2037	1,261,150	280,225	341,293	203,527	725,072	124,762	-	-
2038-2042	649,802	30,539	391,438	153,382	304,420	56,370	-	-
2043-2047	-	-	448,950	97,093	113,159	38,041	-	-
2048-2052	-	-	455,673	30,151	128,974	22,226	-	-
2053-2057	-	-	-	-	100,021	4,958	-	-
Total Principal	$ 5,492,583	$ 1,625,354	$ 2,194,235	$ 1,016,913	$ 3,098,685	$ 733,186	$ 312,890	$ 11,629

The City's outstanding bonds from direct placements of $8,591,268 are secured with pledged revenues. The outstanding issues from direct placement contain provisions that in an event of default, the bonds become taxable and the interest rate on the bonds increases.

The City has no unused lines of credit at June 30, 2022.

NOTE 8. Leases

Lease Receivable

During the current fiscal year, the City began leasing industrial land to a third party. The lease is for three years and the City will receive monthly payments of $2,406. The City recognized $18,022 in lease revenue and $3,634 in interest revenue during the current fiscal year related to this lease. As of June 30, 2022, the City's receivable for lease payments was $59,276. Also, the City has a deferred inflow of resources associated with this lease that will be recognized as revenue over the lease term. As of June 30, 2022, the balance of the deferred inflow of resources was $59,276.

Page left intentionally blank

NOTE 9. Segment Information

In previous years, the component unit, Johnson Springs, issued separate revenue bonds to finance its operations. Segment information for Johnson Springs is disclosed below and also in the supplementary information. Segment information for the other proprietary funds is disclosed in the basic financial statements.

	06/30/22
Operating revenues	$ 716,382
Depreciation and amortization	(392,503)
Operating expenses	(444,631)
Nonoperating revenues and (expenses)	159,166
Beginning net position	3,678,640
Ending net position	3,717,054
Total assets	5,800,226
Total deferred outflows	45,602
Due to primary government	1,949,463
Bonds and other long term debt obligations	73,348
Total deferred inflows	66,286
Net Position	
Net investment in capital assets	3,207,018
Unrestricted	510,036
Total Net Position	$ 3,717,054
Condensed Statement of Cash Flows	
Net cash flows from:	
Operating activities	$ 227,629
Noncapital financing activities	103,580
Capital and related financing activities	(58,112)
Investing activities	4,022
Net Increase (decrease)	$ 277,119
Beginning cash and cash equivalents	282,483
Ending cash and cash equivalents	$ 559,602

NOTE 10. Interfund Receivables, Payables, and Transfers

As of June 30, 2022, interfund receivables and payables that resulted from transactions between the primary government and the component unit were as follows:

	Due from Component Unit	Due to Primary Government
Water Fund:		
Interest receivable	$ 22,418	$ -
Debt repayment receivable	1,927,045	-
Component Unit		
Interest payable	-	22,418
Debt repayment payable	-	1,927,045
Total	$ 1,949,463	$ 1,949,463

In 1998, the City of West Wendover issued long term debt obligations to complete a water project in behalf of its constituents. The component unit, which benefited from the project, is assisting with the repayment of the revenues bonds issued in the water fund. Hence, there is an interfund balance between the water fund and the component unit, Johnson Springs as shown above.

Interfund transfers for the fiscal year ended June 30, 2022 are as follows:

	Transfers out:		
Transfer in:	General	Non-major Ad Valorem Capital Projects	Total Transfers in
Nonmajor Governmental Funds			
Community Service & Local School Fund	$ 29,211	$ -	$ 29,211
Welcome Center Fund	154,000	-	154,000
Wendover Will Landmark Fund	18,100	-	18,100
Capital Projects Fund	1,370,692	61,308	1,432,000
Total transfers out	$ 1,572,003	$ 61,308	$ 1,633,311

Transfers are used to (1) move revenues from the fund that statute or budget requires to collect them to the fund that statute or budget requires to expend them and (2) use unrestricted revenues collected in the general fund to finance various programs accounted for in other funds in accordance with budgetary authorizations.

NOTE 11. Deferred Compensation Plan

The City offers its employees a deferred compensation plan created in accordance with Internal Revenue Code Section 457. The plan, available to all full-time employees at their option, permits participants until termination, retirement, death, or unforeseeable emergency.

Plan assets are held and administered by The Hartford. The plan does not meet the definition of a fiduciary fund as defined in GASB 32 and GASB 97, and therefore, is not reported in this financial statement.

NOTE 12. Room Taxes

On October 16, 2001, Ordinance 01-20 was passed, increasing room taxes from 10% to 16%. Of this rate, 14% is allocated to the West Wendover Recreation District. Additionally, the Ordinance allows for 1% to be paid to a non-profit entity to promote tourism and recreation throughout the City of West Wendover. At June 30, 2022 this amount was held as restricted in the Recreation Fund.

NOTE 13. Commitments and Contingent Liabilities

Amounts received or receivable from grantor agencies are subject to audit and adjustment by grantor agencies, principally the federal government. Any disallowed claims, including amounts already collected may constitute a liability of the applicable funds. The amount, if any, of expenditures which may be disallowed by the grantor cannot be determined at this time although the City expects such amounts, if any, to be immaterial.

The City is party to legal proceedings which normally occur in governmental operations. City officials believe these legal proceedings are not likely to have a material adverse impact on the financial position of the City.

NOTE 14. Available Borrowing Capacity

The lawful general obligation debt limit for city governments is established by State statute not to exceed thirty percent of the total last assessed valuation of the taxable property of the City. At June 30, 2022, the general obligation debt limit and available borrowing capacity of the City of West Wendover was $43,080,520.

NOTE 15. Closure and Post-Closure Care Cost

State and Federal laws and regulations require that the City place a final cover on its landfill sites and perform certain maintenance and monitoring functions at the landfill sites for a minimum of thirty years after closure. In addition to operating expenses related to current activities of the landfill sites, an expense provision and related liability should be recognized based on the future closure and post-closure care costs that will be incurred near or after the date the landfills no longer accepts waste. GASB Statement 18 requires the recognition of these landfill closure and post-closure care costs based on the amount of the landfill used during the year. The City does not report a liability for the estimated closure and post-closure care costs because it has passed a resolution that authorizes participation in the landfill assurance program established through the Nevada Public Agency Insurance Pool as a mechanism to demonstrate financial responsibility for the closure and post-closure care costs. Because the City has, in effect, transferred its responsibility for closure and post-closure care costs to another entity through the purchase of the insurance policy, the liabilities are not reported on the City's financial statements as per GASB 18.

The estimated liability for landfill closure and post-closure care costs under GASB Statement 18 requirements is $673,439 as of June 30, 2022. The City had two cells in operation during fiscal year 2022. The Class I cell has used 100% of available capacity and a new Class I cell was constructed in fiscal year 2016 according to the 2014 Volumetric Survey. The City constructed new cells for operation since 2016, which includes Class III cell, Cell C, Cell B (once fully excavated), and Cell E to be sufficient for an additional 149 months of operation. The estimated closure and post-closure costs are based on the amount that would be paid if all equipment, facilities, and services required to close, monitor, and maintain landfill modules currently in use for all cells in operation during 2022. The City maintained an insurance policy with a face amount of $529,422 at June 30, 2022. Additional financial assurance for closure and post-closure costs is accomplished by the City restricting $145,000 in cash in the garbage and compost fund. See the statement of net position and restricted cash footnote.

NOTE 16. Risk Management

The City is exposed to various risks of loss related to torts; theft of, damage to, and destruction of assets, errors and omissions; injuries to employees; and natural disasters. These risks are covered by commercial insurance purchased from independent third parties. Settled claims from these risks have not exceeded commercial insurance coverage for the past three years.

The City has chosen to establish a risk financing fund for risks associated with the employee's health insurance plan. The risk financing fund is accounted for as an internal service fund where assets are set aside for claim settlement. A premium is charged to each function which accounts for full-time employees.

Liabilities of funds are reported when it is probable that a loss has occurred and the amount of the loss can be reasonably estimated. There were no liabilities that met these criteria at June 30, 2022. Liabilities include an amount for claims that have been incurred but not reported (IBNR). Claim liabilities are calculated considering the effects of inflation, recent claim settlement trends including frequency and amount of pay-outs and other economic and social factors.

Changes in the balances of claims liabilities during the past three fiscal years are as follows:

Fiscal Year Ended June 30	Unpaid Claims Beginning of Fiscal Year	Incurred Claims	Claim Payments	Unpaid Claims End of Fiscal Year
2022	$ -	$ 840,018	$ 840,018	$ -
2021	$ -	$ 671,729	$ 671,729	$ -
2020	$ -	$ 418,723	$ 418,723	$ -

NOTE 17. Retirement and Pension Plans

Public Employees' Retirement System of Nevada (PERS)

Plan description

PERS administers a cost-sharing, multiple-employer, defined benefit public employees' retirement system which includes both Regular and Police/Fire members. The System was established by the Nevada Legislature in 1947, effective July 1, 1948. The System is administered to provide a reasonable base income to qualified employees who have been employed by a public employer and whose earnings capacities have been removed or substantially impaired by age or disability. The report is available on the website at https://www.nvpers.org/.

NOTE 17. Retirement and Pension Plans, Continued

Benefits provided

Benefits, as required by the Nevada Revised Statutes (NRS or statute), are determined by the number of years of accredited service at time of retirement and the member's highest average compensation in any 36 consecutive months with special provisions for members entering the System on or after January 1, 2010. Benefit payments to which participants or their beneficiaries may be entitled under the plan include pension benefits, disability benefits, and survivor benefits.

Monthly benefit allowances for members are computed as 2.5% of average compensation for each accredited year of service prior to July 1, 2001. For service earned on and after July 1, 2001, this multiplier is 2.67% of average compensation. For members entering the System on or after January 1, 2010, there is a 2.5% service time factor and for regular members entering the System on or after July 1, 2015, there is a 2.25% factor. The System offers several alternatives to the unmodified service retirement allowance which, in general, allow the retired employee to accept a reduced service retirement allowance payable monthly during his or her lifetime and various optional monthly payments to a named beneficiary after his or her death.

Post-retirement increases are provided by authority of NRS 286.575 - .579.

Vesting

Regular members entering the System prior to January 1, 2010, are eligible for retirement at age 65 with five years of service, at age 60 with 10 years of service, or at any age with thirty years of service. Regular members entering the System on or after January 1, 2010, are eligible for retirement at age 65 with five years of service, or age 62 with 10 years of service, or any age with thirty years of service. Regular members who entered the System on or after July 1, 2015, are eligible for retirement at age 65 with 5 years of service, or at age 62 with 10 years of service or at age 55 with 30 years of service or any age with 33 1/3 years of service.

Police/Fire members entering the System prior to January 1, 2010, are eligible for retirement at age 65 with five years of service, at age 55 with ten years of service, at age 50 with twenty years of service, or at any age with twenty-five years of service. Police/Fire members entering the System on or after January 1, 2010, are eligible for retirement at 65 with five years of service, or age 60 with ten years of service, or age 50 with twenty years of service, or at any age with thirty years of service. Only service performed in a position as a police officer or firefighter may be counted towards eligibility for retirement as Police/Fire accredited service.

The normal ceiling limitation on monthly benefits allowances is 75% of average compensation. However, a member who has an effective date of membership before July 1, 1985, is entitled to a benefit of up to 90% of average compensation. Both Regular and Police/Fire members become fully vested as to benefits upon completion of five years of service.

NOTE 17. Retirement and Pension Plans, Continued

Contributions

The authority for establishing and amending the obligation to make contributions and member contribution rates is set by statute. New hires, in agencies which did not elect the Employer-Pay Contribution (EPC) plan prior to July 1, 1983, have the option of selecting one of two contribution plans. In one plan, contributions are shared equally by employer and employee. In the other plan, employees can take a reduced salary and have contributions made by the employer (EPC).

The System's basic funding policy provides for periodic contributions at a level pattern of cost as a percentage of salary throughout an employee's working lifetime in order to accumulate sufficient assets to pay benefits when due.

The System receives an actuarial valuation on an annual basis indicating the contribution rates required to fund the System on an actuarial reserve basis. Contributions actually made are in accordance with the required rates established by the Nevada Legislature. These statutory rates are increased/decreased pursuant to NRS 286.421 and 286.450.

The actuary funding method used is the Entry Age Normal Cost Method. It is intended to meet the funding objective and results in a relatively level long-term contributions requirement as a percentage of salary.

For fiscal years ended June 30, 2021, and 2022, the Statutory Employer/employee matching rate was 15.25% and 15.50% for Regular and 22.00% and 22.75% for Police/Fire.

For the fiscal year ended June 30, 2021, and 2022, the Employer-Pay Contribution (EPC) rate was 29.25% and 29.75% for Regular and 42.50% and 44.00% for Police/Fire.

The City's contributions for the current and two preceding fiscal years, all of which were equal to the required contributions, were as follows:

Year Ended June 30,	Regular Fund	Police/Fire Fund
2020	249,082	361,914
2021	252,184	366,421
2022	270,157	399,560

NOTE 17. Retirement and Pension Plans, Continued

Investment policy

The System's policies which determine the investment portfolio target asset allocation are established by the Board. The asset allocation is reviewed annually and is designed to meet the future risk and return needs of the System. The following was the Board adopted policy target asset allocation as of June 30, 2021:

Asset Class	Target Allocation	Long-term Geometric Expected Real Rate of Return*
U.S. stocks	42%	5.50%
International stocks	18%	5.50%
U.S. bonds	28%	0.75%
Private markets	12%	6.65%

*As of June 30, 2021, PERS' long-term inflation assumption was 2.50%.

Pension liability

Net pension liability

At June 30, 2022, the City reported a liability of $5,389,734 for its proportionate share of the PERS' net pension liability. The net pension liability was measured as of June 30, 2021, and the total pension liability used to calculate the net pension liability was determined by an actuarial valuation as of that date. The employer allocation percentage of the net pension liability was based on the total contributions due on wages paid during the measurement period. Each employer's proportion of the net pension liability is based on their combined employer and member contributions relative to the total combined employer and member contributions for all employers for the period ended June 30, 2021. The City's proportion measured as of June 30, 2021, was 0.05910 percent, which was a increase of 0.00090 percent from its proportion measured as of June 30, 2020 .

Pension liability discount rate sensitivity

The following presents the net pension liability of the PERS as of June 30, 2022, calculated using the discount rate of 7.50%, as well as what the PERS net pension liability would be if it were calculated using a discount rate that is 1-percentage-point lower (6.50%) or 1-percentage-point higher (8.50%) than the current discount rate:

	1% Decrease (6.25%)	Discount Rate (7.25%)	1% Increase (8.25%)
Proportionate share of Net pension (asset) / liability	$ 10,730,788	$ 5,389,734	$ 983,802

NOTE 17. Retirement and Pension Plans, Continued

Pension plan fiduciary net position

Detailed information about the pension plan's fiduciary net position is available in the PERS Comprehensive Annual Financial Report, available on the PERS website www.nvpers.org.

Actuarial assumptions

The City's net pension liability was measured as of June 30, 2021, and the total pension liability used to calculate the net pension liability was determined by an actuarial valuation as of that date. The total pension liability was determined using the following actuarial assumptions, applied to all periods included in the measurement:

Inflation rate	2.75%
Investment rate of return	7.50%
Productivity pay increase	0.50%
Projected salary increases	Regular: 4.25% to 9.15%, depending on service Police/Fire: 4.55% to 13.90%, depending on service Rates include inflation and productivity increases
Other assumptions	Same as those used in the June 30, 2019 funding actuarial valuation

Actuarial assumptions used in the June 30, 2021 valuation were based on the results of the experience study for the period July 1, 2016 through June 30, 2020.

The discount rate used to measure the total pension liability was 7.25% as of June 30, 2021. The projection of cash flows used to determine the discount rate assumed plan contributions will be made in amounts consistent with statutory provisions and recognizing the plan's current funding policy and cost-sharing mechanism between employers and members. For this purpose, all contributions that are intended to fund benefits for all plan members and their beneficiaries are included, except that projected contributions that are intended to fund the service costs for future plan members and their beneficiaries are not included.

Based on those assumptions, the pension plan's fiduciary net position was projected to be available to make all projected future benefit payments for current plan members. Therefore, the long-term expected rate of return on pension plan investments was applied to all periods of projected benefit payments to determine the total pension liability as of June 30, 2021.

Pension expense and deferred outflows/inflows of resources related to pensions

For the year ended June 30, 2022, the City recognized pension expense for PERS of $(165,809). At June 30, 2022, the City reported deferred outflows of resources and deferred inflows of resources related to pensions from the following sources:

NOTE 17. Retirement and Pension Plans, Continued

	Deferred Outflows of Resources	Deferred Inflows of Resources
Differences between expected and actual experience	$ 597,019	$ 37,931
Changes in assumptions	1,789,484	-
Net difference between projected and actual earnings on pension plan investments	-	4,397,851
Subtotal	2,386,503	4,435,782
Changes in proportion and differences between contributions and proportional share of contributions	294,747	435,057
Contributions subsequent to the measurement date	669,716	-
Total	$ 3,350,966	$ 4,870,839
Governmental activities	$ 2,701,647	$ 3,927,012
Business-type activities	603,717	877,541
Component unit	45,602	66,286
	$ 3,350,966	$ 4,870,839

Average expected remaining service lives 6.14 years

The $669,716 reported as deferred outflows of resources related to PERS pensions resulting from City contributions subsequent to the measurement date will be recognized as a reduction of the net pension liability in the subsequent fiscal year. Other amounts reported as deferred outflows of resources and deferred inflows of resources related to PERS pensions, excluding the changes in proportion and differences between actual contributions and proportionate share of contributions will be recognized in pension expense as follows:

Year Ending June 30,	Deferred Outflows (Inflows) of Resources
2023	$ (612,173)
2024	(602,143)
2025	(624,608)
2026	(669,464)
2027	402,792
2028	56,317
Thereafter	-

NOTE 18. Prior Period Adjustment

A prior period adjustment was recorded in the General Fund for marijuana tax revenues receipted in 2022 which were actually 2021 revenues. Beginning fund balance in the General Fund was increased by $77,922.

REQUIRED SUPPLEMENTARY INFORMATION

BUDGETARY COMPARISON SCHEDULES FOR THE FOLLOWING MAJOR FUNDS:

The **General Fund** is the City's primary operating fund. It accounts for all financial resources of the general government, except for those required to be accounted for in another fund.

The **Recreation Fund** is used to account for the City's share of room tax proceeds and the distribution of those funds to the recreation district.

PUBLIC EMPLOYEES' RETIREMENT SYSTEM OF NEVADA SCHEDULES

CITY OF WEST WENDOVER, NEVADA
General Fund
Schedule of Revenues, Expenditures, and Changes in Fund Balance
Budget and Actual
For the Year Ended June 30, 2022
(With Comparative Actual Amounts for the Year Ended June 30, 2021)

	Original Budget	Final Budget	Actual	Variance with Final Budget	2021
Revenues					
Property taxes					
Ad valorem	$ 1,323,176	$ 1,323,176	$ 1,335,220	$ 12,044	$ 1,301,208
Personal property	236,987	236,987	256,913	19,926	254,551
Central assessments	19,749	19,749	22,848	3,099	22,476
Total property taxes	1,579,912	1,579,912	1,614,981	35,069	1,578,235
Licenses and permits					
Liquor licenses	150	150	240	90	240
City gaming licenses	207,000	207,000	212,598	5,598	206,304
Animal licenses	685	685	936	251	730
Business licenses	16,800	16,800	17,500	700	17,325
Right of way toll	250,300	250,300	256,628	6,328	255,582
Building permits	22,000	125,000	109,846	(15,154)	20,501
Special permits and fees	832,700	1,001,500	944,032	(57,468)	856,445
Franchise fees	367,821	367,821	393,399	25,578	380,431
Carlines taxes	100	100	86	(14)	101
Total licenses and permits	1,697,556	1,969,356	1,935,265	(34,091)	1,737,659
Intergovernmental revenue					
State consolidated revenue	3,223,610	3,223,610	3,431,645	208,035	3,174,768
1.75 cent gas tax	31,380	31,380	31,561	181	34,748
2.35 cent gas tax	49,480	49,480	48,116	(1,364)	49,167
County road tax	26,060	26,060	26,487	427	25,240
County transportation funds	187,000	187,000	187,000	-	180,000
County gaming tax	426,971	394,000	438,278	44,278	513,765
Federal/state grants	208,417	830,283	841,314	11,031	125,748
Infrastructure tax	75,000	75,000	75,591	591	75,243
Marijuana revenue disbursement	5,363	4,560	4,560	-	5,363
Reimbursement from Elko County	179,140	179,140	179,125	(15)	197,367
Total intergovernmental revenue	4,412,421	5,000,513	5,263,677	263,164	4,381,409
Charges for services					
Special police services	1,500	1,500	926	(574)	1,360
Work cards	19,000	19,000	15,629	(3,371)	24,339
Special fire protection services	10,000	10,000	9,873	(127)	14,625
Dispatch fees	7,584	7,584	7,584	-	7,584
Animal shelter fees	1,000	1,000	2,876	1,876	1,394
Pipeline administrative services	1,900	1,900	-	(1,900)	1,900
Miscellaneous	15,506	15,506	11,558	(3,948)	55,206
Total general	56,490	56,490	48,446	(8,044)	106,408
Fines and forfeitures					
Fines and fees	52,550	52,550	49,720	(2,830)	52,097
Total fines and forfeitures	52,550	52,550	49,720	(2,830)	52,097
Miscellaneous					
Interest	3,000	3,000	5,700	2,700	2,627
Donations	166,000	166,000	173,100	7,100	166,000
Rents and royalties	29,500	29,500	27,920	(1,580)	19,698
Miscellaneous	6,000	6,000	(1,450)	(7,450)	9,983
Total miscellaneous	204,500	204,500	205,270	770	198,308
Total revenues	8,003,429	8,863,321	9,117,359	254,038	8,054,116

(continued)

CITY OF WEST WENDOVER, NEVADA
General Fund
Schedule of Revenues, Expenditures, and Changes in Fund Balance
Budget and Actual
For the Year Ended June 30, 2022
(With Comparative Actual Amounts for the Year Ended June 30, 2021), Continued

	Original Budget	Final Budget	Actual	Variance with Final Budget	2021
Expenditures					
General government					
Administration and finance					
Salaries and wages	453,621	524,091	474,327	49,764	456,885
Employee benefits	221,568	253,022	218,751	34,271	293,049
Services and supplies	448,460	554,700	477,003	77,697	437,039
Total administration and finance	1,123,649	1,331,813	1,170,081	161,732	1,186,973
Elections					
Services and supplies	-	-	-	-	919
Total general government	1,123,649	1,331,813	1,170,081	161,732	1,187,892
Judicial					
Municipal court					
Salaries and wages	246,462	237,680	233,909	3,771	226,397
Employee benefits	145,294	133,994	123,750	10,244	121,809
Services and supplies	73,450	64,145	60,303	3,842	42,985
Capital outlay	-	64,762	64,762	-	-
Total judicial	465,206	500,581	482,724	17,857	391,191
Public safety					
Police					
Salaries and wages	1,368,215	1,229,358	1,236,980	(7,622)	1,159,065
Employee benefits	860,209	796,651	764,521	32,130	711,738
Services and supplies	398,800	318,600	300,112	18,488	268,834
Capital outlay	27,000	157,500	18,919	138,581	149,804
Total police department	2,654,224	2,502,109	2,320,532	181,577	2,289,441
Fire					
Salaries and wages	443,233	443,233	420,742	22,491	424,929
Employee benefits	262,678	270,961	249,232	21,729	249,194
Services and supplies	117,800	128,800	114,324	14,476	62,460
Total fire department	823,711	842,994	784,298	58,696	736,583
Dispatch center					
Salaries and wages	341,029	298,499	300,138	(1,639)	294,573
Employee benefits	187,727	189,398	166,281	23,117	160,053
Services and supplies	46,000	34,100	28,466	5,634	32,400
Total dispatch center	574,756	521,997	494,885	27,112	487,026
Total public safety	4,052,691	3,867,100	3,599,715	267,385	3,513,050
Public works					
Paved streets					
Salaries and wages	64,049	39,631	35,186	4,445	16,783
Employee benefits	33,739	33,739	17,978	15,761	8,064
Services and supplies	167,300	164,000	156,016	7,984	291,180
Total paved streets	265,088	237,370	209,180	28,190	316,027

(continued)

CITY OF WEST WENDOVER, NEVADA
General Fund
Schedule of Revenues, Expenditures, and Changes in Fund Balance
Budget and Actual
For the Year Ended June 30, 2022
(With Comparative Actual Amounts for the Year Ended June 30, 2021), Continued

	Original Budget	Final Budget	Actual	Variance with Final Budget	2021
General					
Salaries and wages	230,577	316,824	214,480	102,344	235,389
Employee benefits	121,461	180,890	113,187	67,703	132,572
Services and supplies	31,000	39,450	34,548	4,902	26,089
Total general	383,038	537,164	362,215	174,949	394,050
Total public works	648,126	774,534	571,395	203,139	710,077
Community development					
Salaries and wages	190,723	143,834	143,992	(158)	140,607
Employee benefits	86,204	71,891	64,874	7,017	63,209
Services and supplies	164,200	127,700	85,734	41,966	71,812
Capital outlay	50,000	-	-	-	-
Total community development	491,127	343,425	294,600	48,825	275,628
Health					
Public health services					
Services and supplies	34,400	19,500	10,269	9,231	42,767
Animal control					
Salaries and wages	64,136	66,546	64,249	2,297	63,523
Employee benefits	37,645	38,495	32,668	5,827	31,858
Services and supplies	23,200	26,000	19,013	6,987	18,870
Total animal control	124,981	131,041	115,930	24,342	114,251
Total health	159,381	150,541	126,199	33,573	157,018
Culture and recreation					
Library service					
Services and supplies	17,600	19,100	15,522	3,578	13,598
Total culture and recreation	17,600	19,100	15,522	3,578	13,598
Community support					
Miscellaneous					
Services and supplies	31,000	31,000	39,148	(8,148)	17,019
Total community support	31,000	31,000	39,148	(8,148)	17,019
Debt services	55,853	55,853	55,853	-	56,062
Total expenditures	7,044,633	7,073,947	6,355,237	727,941	6,321,535
Excess (deficiency) of revenues over (under) expenditures	958,796	1,789,374	2,762,122	(972,748)	1,732,581
Other financing sources (uses)					
Transfers out	(1,860,909)	(1,572,003)	(1,572,003)	-	(695,940)
Total other financing sources and uses	(1,860,909)	(1,572,003)	(1,572,003)	-	(695,940)
Net change in fund balance	(902,113)	217,371	1,190,119	972,748	1,036,641
Fund balance, beginning of year	3,743,833	3,743,833	3,743,833	-	2,707,192
Restatement adjustment	-	-	77,922	77,922	-
Fund balance, end of year	$ 2,841,720	$ 3,961,204	$ 5,011,874	$ 1,050,670	$ 3,743,833

CITY OF WEST WENDOVER, NEVADA
Recreation Fund
Schedule of Revenues, Expenditures, and Changes in Fund Balance
Budget and Actual
For the Year Ended June 30, 2022
(With Comparative Actual Amounts for the Year Ended June 30, 2021)

	Original Budget	Final Budget	Actual	Variance with Final Budget	2021
Revenues					
Taxes					
Room taxes	$ 1,530,700	$ 1,610,000	$ 1,967,604	$ 357,604	$ 1,602,940
Total taxes	1,530,700	1,610,000	1,967,604	357,604	1,602,940
Intergovernmental					
Grant revenue	-	503,730	503,730	-	-
Total intergovernmental	-	503,730	503,730	-	-
Total revenues	1,530,700	2,113,730	2,471,334	357,604	1,602,940
Expenditures					
Culture and recreation					
Room tax distribution	1,530,400	2,050,763	2,374,313	(323,550)	1,557,451
Total culture and recreation	1,530,400	2,050,763	2,374,313	(323,550)	1,557,451
Total expenditures	1,530,400	2,050,763	2,374,313	(323,550)	1,557,451
Net change in fund balance	300	62,967	97,021	34,054	45,489
Fund balance, beginning of year	163,603	163,603	163,603	-	118,114
Fund balance, end of year	$ 163,903	$ 226,570	$ 260,624	$ 34,054	$ 163,603

CITY OF WEST WENDOVER, NEVADA
Schedule of the Proportionate Share of the Net Pension Liability
Public Employees' Retirement System of Nevada
June 30, 2022
Last 10 Fiscal Years

	Reporting Fiscal Year (Measurement Date)							
	2022 (2021)	2021 (2020)	2020 (2019)	2019 (2018)	2018 (2017)	2017 (2016)	2016 (2015)	2015 (2014)
Proportion of the net pension liability (asset)	0.059100%	0.058200%	0.056610%	0.062480%	0.062300%	0.063600%	0.059820%	0.068384%
Proportionate share of the net pension liability (asset)	$ 5,389,734	$ 8,106,010	$ 7,719,816	$ 8,521,101	$ 8,286,307	$ 8,558,081	$ 6,854,700	$ 6,653,165
Covered payroll	$ 3,650,188	$ 3,604,289	$ 3,394,178	$ 3,327,353	$ 3,429,997	$ 3,355,482	$ 2,961,477	$ 3,113,721
Proportionate share of the net pension liability (asset) as a percentage of its covered payroll	147.66%	224.90%	227.44%	256.09%	241.58%	255.05%	231.46%	213.67%
Plan fiduciary net position as a percentage of the total pension liability	86.5%	77.0%	76.5%	75.2%	74.4%	72.2%	75.1%	76.30%

Note: The District implemented GASB 68 in fiscal year 2015. Prior year information is not available.

CITY OF WEST WENDOVER, NEVADA
Schedule of Contributions
Public Employees' Retirement System of Nevada
June 30, 2022
Last 10 Fiscal Years

	Reporting Fiscal Year								
	2022	2021	2020	2019	2018	2017	2016	2015	2014
Contractually required contribution	$ 669,716	$ 618,605	$ 610,996	0 $ 545,004	$ 579,653	$ 559,234	$ 539,193	$ 461,652	$ 483,635
Contributions in relation to the contractually required contribution	$ (669,716)	$ (618,605)	$ (610,996)	$ (545,004)	$ (579,653)	$ (559,234)	$ (539,193)	$ (461,652)	$ (483,635)
Contribution deficiency (excess)	$ -	$ -	$ -	$ -	$ -	$ -	$ -	$ -	$ -
Covered payroll	$ 3,853,857	$ 3,650,188	$ 3,604,289	$ 3,394,178	$ 3,327,353	$ 3,429,997	$ 3,355,482	$ 2,961,477	$ 3,113,721
Contributions as a percentage of covered-employee payroll	17.38%	16.95%	16.95%	16.06%	17.42%	16.30%	16.07%	15.59%	15.53%

Note: The entity implemented GASB 68 in fiscal year 2015. Prior year information is not available.

This page left intentionally blank

SUPPLEMENTARY INFORMATION

MAJOR GOVERNMENTAL FUNDS

Capital project funds are used to account for the acquisition and construction of major capital facilities other than those financed by proprietary funds.

The **Capital Projects Fund** is used to account for the acquisition or construction of capital facilities as outlined in Resolution 1997-14.

NONMAJOR GOVERNMENTAL FUNDS

Special revenue funds are used to account for specific revenues that are legally restricted to expenditure for particular purposes.

The **Seizure and Forfeiture Fund** is used to account for seizures and forfeitures received by the City under City Resolution 1992-09, as provided for in NRS 179.1187

The **Court Administrative Assessment Fund** is used to account for fees collected by the court as required by Nevada Revised Statues Section 176.059, which are used to improve the operations of the court.

The **Welcome Center Fund** is used to account for the merchandise sales and operations of the Welcome Center as established under City Resolution 2001-04.

The **Wendover Will Landmark Fund** is used to account for the construction, maintenance, and related revenues and expenditures associated with the Wendover Will Landmark as established by City Resolution 2005-01.

The **Grant Fund** is used to account for various grants receipts and expenditures as outlined in Resolution 1996-14.

The **Community Services & Local School Fund** is used to account for certain programs and activities related to the West Wendover Schools and further provide funds for other local programs as outlined in Resolution 2020-03.

Capital project funds are used to account for the acquisition and construction of major capital facilities other than those financed by proprietary funds.

The **Ad Valorem Capital Projects Fund** is used to account for revenue received from a special ad valorem tax that must be recorded in a capital projects fund and dedicated to capital project needs within the City, as established under NRS 268.045.

CITY OF WEST WENDOVER, NEVADA
Capital Project Fund
Schedule of Revenues, Expenditures, and Changes in Fund Balance
Budget and Actual
For the Year Ended June 30, 2022
(With Comparative Actual Amounts for the Year Ended June 30, 2021)

	Original Budget	Final Budget	Actual	Variance with Final Budget	2021
Revenues					
Intergovernmental					
Federal grants	$ 1,695,425	$ 1,679,971	$ 205,511	$ (1,474,460)	$ 22,528
Total intergovernmental	1,695,425	1,679,971	205,511	(1,474,460)	22,528
Miscellaneous					
Interest income	500	55	124	69	160
Donations	-	200,000	-	(200,000)	25,000
Miscellaneous	2,500	32,507	30,007	(2,500)	-
Sale of capital assets	-	42,300	42,300	-	253,280
Total miscellaneous	3,000	274,862	72,431	(202,431)	278,440
Total revenues	1,698,425	1,954,833	277,942	(1,676,891)	300,968
Expenditures					
General government					
Capital outlay	14,640,605	14,682,535	1,844,895	12,837,640	256,959
Total general government	14,640,605	14,682,535	1,844,895	12,837,640	256,959
Debt service					
Debt service - principal	332,119	332,119	332,119	-	318,918
Debt service - interest	188,867	188,867	188,868	(1)	199,216
Total debt service	520,986	520,986	520,987	(1)	518,134
Total expenditures	15,161,591	15,203,521	2,365,882	12,837,639	775,093
Excess of revenues over (under) expenditures	(13,463,166)	(13,248,688)	(2,087,940)	11,160,748	(474,125)
Other financing sources (uses)					
Debt proceeds	11,846,800	11,796,800	855,253	(10,941,547)	-
Transfers in	1,616,366	1,432,000	1,432,000	-	543,305
Total other financing sources	13,463,166	13,228,800	2,287,253	(10,941,547)	543,305
Net change in fund balance	-	(19,888)	199,313	219,201	69,180
Fund balance, beginning of year	383,961	383,961	383,961	-	314,781
Fund balance, end of year	$ 383,961	$ 364,073	$ 583,274	$ 219,201	$ 383,961

CITY OF WEST WENDOVER, NEVADA
Combining Balance Sheet
Nonmajor Governmental Funds
June 30, 2022

	Special Revenue						Capital Project	Total
	Seizure Forfeiture Fund	Court Administrative Assessment Fund	Welcome Center Fund	Wendover Will Landmark Fund	Community Services and Local School Fund	Grant Fund	Ad Valorem Capital Projects Fund	Nonmajor Governmental Funds
Assets								
Cash and investments	$ 22,960	$ 70,745	$ 30,035	$ 17,896	$ 10	$ -	$ 30,231	$ 171,877
Due from other governments	-	-	-	-	-	-	23,893	23,893
Inventory	-	-	1,149	-	-	-	-	1,149
Restricted cash	-	-	-	-	-	-	-	-
Total assets	$ 22,960	$ 70,745	$ 31,184	$ 17,896	$ 10	$ -	$ 54,124	$ 196,919
Liabilities								
Accounts payable	$ 19,173	$ 883	$ 239	$ 184	$ -	$ -	$ -	$ 20,479
Total liabilities	19,173	883	239	184	-	-	-	20,479
Fund Balances								
Nonspendable	-	-	1,149	-	-	-	-	1,149
Restricted	3,787	69,862	29,796	-	-	-	54,124	157,569
Committed	-	-	-	17,712	10	-	-	17,722
Total fund balances	3,787	69,862	30,945	17,712	10	-	54,124	176,440
Total liabilities and fund balances	$ 22,960	$ 70,745	$ 31,184	$ 17,896	$ 10	$ -	$ 54,124	$ 196,919

CITY OF WEST WENDOVER, NEVADA
Combining Statement of Revenues, Expenditures, and Changes in Fund Balances
Nonmajor Governmental Funds
For the Year Ended June 30, 2022

	Special Revenue						Capital Project	
	Seizure Forfeiture Fund	Court Administrative Assessment Fund	Welcome Center Fund	Wendover Will Landmark Fund	Community Services and Local School Fund	Grant Fund	Ad Valorem Capital Projects Fund	Total Nonmajor Governmental Funds
Revenues								
Other taxes	$ -	$ -	$ -	$ -	$ -	$ -	$ 59,564	$ 59,564
Intergovernmental	-	2,152	120,012	4,803	-	-	11,308	138,275
Charges for services	-	5,733	-	-	-	-	-	5,733
Miscellaneous	-	28	1,860	437	-	-	-	2,325
Total revenues	-	7,913	121,872	5,240	-	-	70,872	205,897
Expenditures								
Judicial	-	1,930	-	-	-	-	-	1,930
Community support	-	-	262,557	20,078	29,201	-	-	311,836
Total expenditures	-	1,930	262,557	20,078	29,201	-	-	313,766
Excess (deficiency) of revenues over (under) expenditures	-	5,983	(140,685)	(14,838)	(29,201)	-	70,872	(107,869)
Other financing sources (uses)								
Transfers in	-	-	154,000	18,100	29,211	-	-	201,311
Transfers out	-	-	-	-	-	-	(61,308)	(61,308)
Total other financing sources (uses)	-	-	154,000	18,100	29,211	-	(61,308)	140,003
Net change in fund balances	-	5,983	13,315	3,262	10	-	9,564	32,134
Fund balances, beginning of year	3,787	63,879	17,630	14,450	-	-	44,560	144,306
Fund balances, end of year	$ 3,787	$ 69,862	$ 30,945	$ 17,712	$ 10	$ -	$ 54,124	$ 176,440

CITY OF WEST WENDOVER, NEVADA
Seizure Forfeiture Fund
Schedule of Revenues, Expenditures, and Changes in Fund Balance
Budget and Actual
For the Year Ended June 30, 2022
(With Comparative Actual Amounts for the Year Ended June 30, 2021)

	Original Budget	Final Budget	Actual	Variance with Final Budget	2021
Revenues					
Total revenues	$ -	$ -	$ -	$ -	$ -
Total expenditures	-	-	-	-	-
Net change in fund balance	-	-	-	-	-
Fund balance, beginning of year	3,787	3,787	3,787	-	3,787
Fund balance, end of year	$ 3,787	$ 3,787	$ 3,787	$ -	$ 3,787

CITY OF WEST WENDOVER, NEVADA
Court Administrative Assessments Fund
Schedule of Revenues, Expenditures, and Changes in Fund Balance
Budget and Actual
For the Year Ended June 30, 2022
(With Comparative Actual Amounts for the Year Ended June 30, 2021)

	Original Budget	Final Budget	Actual	Variance with Final Budget	2021
Revenues					
Charges for services					
Court assessments	$ 8,500	$ 5,000	$ 5,733	$ 733	$ 6,900
Total charges for services	8,500	5,000	5,733	733	6,900
Intergovernmental					
Grant revenue	-	2,152	2,152	-	-
Total intergovernmental	-	2,152	2,152	-	-
Miscellaneous					
Interest	300	25	28	3	51
Total miscellaneous	300	25	28	3	51
Total revenues	8,800	7,177	7,913	736	6,951
Expenditures					
Judicial					
Services and supplies	4,000	1,050	1,930	(880)	383
Capital outlay	-	4,025	-	4,025	3,232
Total expenditures	4,000	5,075	1,930	3,145	3,615
Net change in fund balance	4,800	2,102	5,983	(2,409)	3,336
Fund balance, beginning of year	63,879	63,879	63,879	-	60,543
Fund balance, end of year	$ 68,679	$ 65,981	$ 69,862	$ 3,881	$ 63,879

CITY OF WEST WENDOVER, NEVADA
Welcome Center Fund
Schedule of Revenues, Expenditures, and Changes in Fund Balance
Budget and Actual
For the Year Ended June 30, 2022
(With Comparative Actual Amounts for the Year Ended June 30, 2021)

	Original Budget	Final Budget	Actual	Variance with Final Budget	2021
Revenues					
Intergovernmental					
Operating grants	$ 10,000	$ 22,000	$ 22,000	$ -	$ 9,750
Elko county recreation board	50,000	50,000	50,000	-	75,700
Grant Revenue	-	48,012	48,012	-	-
Total intergovernmental	60,000	120,012	120,012	-	85,450
Miscellaneous					
Merchandise sales	2,500	2,500	1,860	(640)	1,838
Total miscellaneous	2,500	2,500	1,860	(640)	1,838
Total revenues	62,500	122,512	121,872	(640)	87,288
Expenditures					
Community support					
Salaries and wages	109,811	110,637	110,351	286	106,593
Employee benefits	61,220	63,209	60,858	2,351	59,978
Services and supplies	69,500	37,500	27,854	9,646	52,662
Capital outlay	65,000	65,000	63,494	1,506	58,421
Total expenditures	305,531	276,346	262,557	13,789	277,654
Excess of revenues over (under) expenditures	(243,031)	(153,834)	(140,685)	13,149	(190,366)
Other financing sources					
Transfers in	243,031	154,000	154,000	-	171,120
Net change in fund balance	-	166	13,315	13,149	(19,246)
Fund balance, beginning of year	17,630	17,630	17,630	-	36,876
Fund balance, end of year	$ 17,630	$ 17,796	$ 30,945	$ 13,149	$ 17,630

CITY OF WEST WENDOVER, NEVADA
Wendover Will Landmark Fund
Schedule of Revenues, Expenditures, and Changes in Fund Balance
Budget and Actual
For the Year Ended June 30, 2022
(With Comparative Actual Amounts for the Year Ended June 30, 2021)

	Original Budget	Final Budget	Actual	Variance with Final Budget	2021
Revenues					
Intergovernmental					
Grant Revenue	$ -	$ 4,803	$ 4,803	$ -	$ -
Total intergovernmental	-	4,803	4,803	-	-
Miscellaneous					
Merchandise sales	200	150	17	(133)	150
Interest revenue	-	450	420	(30)	417
Total miscellaneous	200	600	437	(163)	567
Total revenues	200	5,403	5,240	(163)	567
Expenditures					
Community Support					
Services and supplies	22,500	23,500	20,078	3,422	20,246
Total expenditures	22,500	23,500	20,078	3,422	20,246
Excess of revenues over (under) expenditures	(22,300)	(18,097)	(14,838)	3,259	(19,679)
Other financing sources					
Transfers in	22,300	18,100	18,100	-	22,100
Net change in fund balance	-	3	3,262	3,259	2,421
Fund balance, beginning of year	14,450	14,450	14,450	-	12,029
Fund balance, end of year	$ 14,450	$ 14,453	$ 17,712	$ 3,259	$ 14,450

CITY OF WEST WENDOVER, NEVADA
Grant Fund
Schedule of Revenues, Expenditures, and Changes in Fund Balance
Budget and Actual
For the Year Ended June 30, 2022
(With Comparative Actual Amounts for the Year Ended June 30, 2021)

	Original Budget	Final Budget	Actual	Variance with Final Budget	2021
Revenues					
Intergovernmental					
Grant revenue	$ -	$ 2,870,346	$ -	$ (2,870,346)	$ 662,607
Other grant revenue	-	-	-	-	-
Total intergovernmental	-	2,870,346	-	(2,870,346)	662,607
Total revenues	-	2,870,346	-	(2,870,346)	662,607
Expenditures					
Public saftey					
Salaries and wages	-	-	-	-	172,996
Employee benefits	-	-	-	-	278,155
Services and supplies	-	2,870,346	-	2,870,346	211,456
Total public safey	-	2,870,346	-	2,870,346	662,607
Total expenditures	-	2,870,346	-	2,870,346	662,607
Net change in fund balance	-	-	-	-	-
Fund balance, beginning of year	-	-	-	-	-
Fund balance, end of year	$ -	$ -	$ -	$ -	$ -

CITY OF WEST WENDOVER, NEVADA
Community Services and Local School Fund
Schedule of Revenues, Expenditures, and Changes in Fund Balance
Budget and Actual
For the Year Ended June 30, 2022
(With Comparative Actual Amounts for the Year Ended June 30, 2021)

	Original Budget	Final Budget	Actual	Variance with Final Budget	2021
Revenues					
Total revenues	$ -	$ -	$ -	$ -	$ -
Expenditures					
Community Support					
Services and supplies	-	29,211	29,201	10	-
Total expenditures	-	29,211	29,201	10	-
Excess of revenues over (under) expenditures	-	(29,211)	(29,201)	10	-
Other financing sources					
Transfers in	-	29,211	29,211	-	-
Transfers out	-	-	-	-	-
Net change in fund balance	-	-	10	10	-
Fund balance, beginning of year	-	-	-	-	-
Fund balance, end of year	$ -	$ -	$ 10	$ 10	$ -

CITY OF WEST WENDOVER, NEVADA
Ad Valorem Capital Projects Fund
Schedule of Revenues, Expenditures, and Changes in Fund Balance
Budget and Actual
For the Year Ended June 30, 2022
(With Comparative Actual Amounts for the Year Ended June 30, 2021)

	Original Budget	Final Budget	Actual	Variance with Final Budget	2021
Revenues					
Intergovernmental					
Grant Revenue	$ -	$ 11,308	$ 11,308	$ -	$ -
Total intergovernmental	-	11,308	11,308	-	-
Other taxes					
Ad valorem tax	50,000	50,000	59,564	9,564	57,999
Total other taxes	50,000	50,000	59,564	9,564	57,999
Total revenues	50,000	61,308	70,872	9,564	57,999
Expenditures					
Total expenditures	-	-	-	-	-
Excess of revenues over (under) expenditures	50,000	61,308	70,872	9,564	57,999
Other financing sources (uses)					
Transfers out	(50,000)	(61,308)	(61,308)	-	(40,585)
Net change in fund balance	-	-	9,564	9,564	17,414
Fund balance, beginning of year	44,560	44,560	44,560	-	27,146
Fund balance, end of year	$ 44,560	$ 44,560	$ 54,124	$ 9,564	$ 44,560

MAJOR BUSINESS-TYPE FUNDS

CITY OF WEST WENDOVER, NEVADA
Water Fund
Schedule of Revenues, Expenditures, and Changes in Net Position
Budget and Actual
For the Year Ended June 30, 2022
(With Comparative Actual Amounts for the Year Ended June 30, 2021)

	Original Budget	Final Budget	Actual	Variance with Final Budget	2021
Operating revenues					
Charges for services	$ 1,344,500	$ 1,344,500	$ 1,340,630	$ (3,870)	$ 1,300,479
Total operating revenues	1,344,500	1,344,500	1,340,630	(3,870)	1,300,479
Operating expenses					
Water purchases	619,000	619,000	567,230	51,770	578,326
Salaries and wages	228,590	228,590	240,323	(11,733)	220,864
Employee benefits	130,340	130,340	83,386	46,954	118,910
Services and supplies	337,723	337,723	315,645	22,078	307,444
Depreciation and amortization	143,000	143,000	138,038	4,962	140,220
Total operating expenses	1,458,653	1,458,653	1,344,622	114,031	1,365,764
Operating income	(114,153)	(114,153)	(3,992)	110,161	(65,285)
Nonoperating revenues (expenses)					
Interest income	48,987	48,987	49,145	158	38,280
Impact fees	25,000	25,000	25,159	159	1,496
Grant revenue	238,048	238,048	238,048	-	-
Miscellaneous income	13,000	13,000	13,831	831	15,826
Contributions from component unit for debt payments	110,735	110,735	10,584	(100,151)	10,584
Capital outlay	(10,825)	(10,825)	(953)	9,872	(788)
Interest expense	(67,128)	(67,128)	(68,674)	(1,546)	(58,375)
Total nonoperating revenues (expenses)	357,817	357,817	267,140	(90,677)	7,023
Change in net position	243,664	243,664	263,148	19,484	(58,262)
Total net position, beginning of year	3,612,390	3,612,390	3,612,390	-	3,670,652
Total net position, end of year	$ 3,856,054	$ 3,856,054	$ 3,875,538	$ 19,484	$ 3,612,390

CITY OF WEST WENDOVER, NEVADA
Sewer Fund
Schedule of Revenues, Expenditures, and Changes in Net Position
Budget and Actual
For the Year Ended June 30, 2022
(With Comparative Actual Amounts for the Year Ended June 30, 2021)

	Original Budget	Final Budget	Actual	Variance with Final Budget	2021
Operating revenues					
Charges for services:					
Charges for services	$ 1,233,600	$ 1,233,600	$ 1,220,332	$ (13,268)	$ 1,115,614
Total operating revenues	1,233,600	1,233,600	1,220,332	(13,268)	1,115,614
Operating expenses					
Salaries and wages	337,037	337,037	332,126	4,911	287,898
Employee benefits	193,302	193,302	130,003	63,299	174,699
Services and supplies	435,600	435,600	433,843	1,757	408,089
Capital outlay	9,825	9,825	-	9,825	-
Depreciation and amortization	555,500	555,500	544,653	10,847	546,726
Total operating expenses	1,531,264	1,531,264	1,440,625	90,639	1,417,412
Operating loss	(297,664)	(297,664)	(220,293)	77,371	(301,798)
Nonoperating revenues (expenses)					
Interest income	270	270	365	95	223
Impact fees	10,000	10,000	12,851	2,851	-
Grant revenue	816,491	816,491	816,491	-	-
Miscellaneous income	6,500	6,500	7,764	1,264	8,056
Interest expense	(67,013)	(67,013)	(66,239)	774	(70,162)
Total nonoperating revenues	766,248	766,248	771,232	4,984	(61,883)
Change in net position	468,584	468,584	550,939	82,355	(363,681)
Total net position, beginning of year	8,085,069	8,085,069	8,085,069	-	8,448,750
Total net position, end of year	$ 8,085,069	$ 8,085,069	$ 8,636,008	$ 550,939	$ 8,085,069

CITY OF WEST WENDOVER, NEVADA
Garbage / Compost Facility Fund
Schedule of Revenues, Expenditures, and Changes in Net Position
Budget and Actual
For the Year Ended June 30, 2022
(With Comparative Actual Amounts for the Year Ended June 30, 2021)

	Original Budget	Final Budget	Actual	Variance with Final Budget	2021
Operating revenues					
Charges for services	$ 1,472,600	$ 1,472,600	$ 1,767,009	$ 294,409	$ 1,388,999
Total operating revenues	1,472,600	1,472,600	1,767,009	294,409	1,388,999
Operating expenses					
Salaries and wages	356,243	356,243	291,040	65,203	282,584
Employee benefits	196,977	196,977	119,985	76,992	158,556
Services and supplies	273,802	273,802	240,628	33,174	207,719
Capital outlay	20,000	20,000	-	20,000	-
Depreciation and amortization	338,200	338,200	353,041	(14,841)	382,278
Total operating expenses	1,185,222	1,185,222	1,004,694	180,528	1,031,137
Operating income	287,378	287,378	762,315	474,937	357,862
Nonoperating revenues (expenses)					
Interest income	600	600	1,216	616	1,580
Grant revenue	307,203	307,203	307,203	-	-
Miscellaneous income	3,000	3,000	24,917	21,917	21,240
Interest expense	(17,561)	(17,561)	(16,766)	795	(22,867)
Total nonoperating expenses	293,242	293,242	316,570	23,328	(47)
Change in net position	580,620	580,620	1,078,885	498,265	357,815
Total net position, beginning of year	4,326,322	4,326,322	4,326,322	-	3,968,507
Total net position, end of year	$ 4,906,942	$ 4,906,942	$ 5,405,207	$ 498,265	$ 4,326,322

COMPONENT UNIT SUPPLEMENTARY SCHEDULES

CITY OF WEST WENDOVER, NEVADA
Component Unit – Johnson Springs
Statement of Net Position
For the Year Ended June 30, 2022

	Component Unit Johnson Springs
Assets	
Current assets	
Cash and investments	$ 559,602
Accounts receivable, net	69,090
Inventory	15,053
Total current assets	643,745
Noncurrent assets	
Land	18,000
Buildings	6,836,936
Improvements other than buildings	411,632
Machinery and equipment	580,779
Utility system	5,316,197
Less accumulated depreciation	(8,007,063)
Total noncurrent assets	5,156,481
Total assets	5,800,226
Deferred Outflows of Resources	
Deferred outflows related to pensions	45,602
Liabilities	
Current liabilities	
Accounts payable	27,846
Accrued liabilities	1,687
Due to primary government	1,949,463
Compensated absences	10,144
Total current liabilities	1,989,140
Noncurrent liabilities:	
Net pension liability	73,348
Total noncurrent liabilities	73,348
Total liabilities	2,062,488
Deferred Inflows of Resources	
Deferred inflows related to pensions	66,286
Net Position	
Net investment in capital assets	3,207,018
Unrestricted	510,036
Total net position	$ 3,717,054

CITY OF WEST WENDOVER, NEVADA
Component Unit – Johnson Springs
Schedule of Revenues, Expenditures, and Changes in Net Position
Budget and Actual
For the Year Ended June 30, 2022
(With Comparative Actual Amounts for the Year Ended June 30, 2021)

	Original Budget	Final Budget	Actual	Variance with Final Budget	2021
Operating revenues					
Charges for services	$ 715,000	$ 715,000	$ 716,382	$ 1,382	$ 721,512
Total operating revenues	715,000	715,000	716,382	1,382	721,512
Operating expenses					
Water purchases	113,000	113,000	111,534	1,466	112,866
Salaries and wages	57,000	57,000	57,450	(450)	62,414
Employee benefits	44,300	44,300	2,452	41,848	10,284
Services and supplies	296,556	296,556	273,195	23,361	236,155
Depreciation and amortization	392,700	392,700	392,503	197	392,004
Total operating expenses	903,556	903,556	837,134	66,422	813,723
Operating loss	(188,556)	(188,556)	(120,752)	67,804	(92,211)
Nonoperating revenues (expenses)					
Interest income	1,750	1,750	4,022	2,272	5,188
Grant revenue	154,315	154,315	154,315	-	-
Miscellaneous income	60,000	60,000	60,000	-	12,000
Debt paid through primary government	(10,584)	(10,584)	(10,584)	-	(10,584)
Interest expense	(48,587)	(48,587)	(48,587)	-	(36,607)
Total nonoperating revenues (expenses)	156,894	156,894	159,166	2,272	(30,003)
Change in net position	(31,662)	(31,662)	38,414	70,076	(122,214)
Total net position, beginning of year	3,678,640	3,678,640	3,678,640	-	3,800,854
Total net position, end of year	$ 3,646,978	$ 3,646,978	$ 3,717,054	$ 70,076	$ 3,678,640

CITY OF WEST WENDOVER, NEVADA
Component Unit – Johnson Springs
Statement of Cash Flows
June 30, 2022

	Component Unit Johnson Springs
Cash Flows From Operating Activities:	
Cash received from customers, service fees	$ 725,081
Cash paid to suppliers	(415,969)
Cash paid to employees	(81,483)
Net cash flows from operating activities	227,629
Cash Flows From Noncapital Financing Activities:	
Net component unit receipts/(payments)	(110,735)
Cash received from miscellaneous sources	60,000
Grant proceeds	154,315
Net cash flows from noncapital financing activities	103,580
Cash Flows From Capital and Related Financing Activities:	
Interest paid on capital debt	(48,587)
Acquisition and construction of capital assets	(9,525)
Net cash flows from capital and related financing activities	(58,112)
Cash Flows From Investing Activities:	
Interest income	4,022
Net change in cash and cash equivalents	277,119
Cash and investments, including restricted cash, beginning of year	282,483
Cash and Cash Equivalents, Including Restricted Cash , End of Year	$ 559,602
Reconciliation of operating income to net cash flows from operating activities:	
Operating income (loss)	$ (120,752)
Adjustments to reconcile net income (loss) to net cash from operating activities	
Depreciation/amortization	392,503
Pension expense	(12,763)
Employer pension contributions	(9,114)
Changes in operating assets and liabilities:	
(Increase) decrease in receivables	8,699
(Increase) decrease in inventory	(832)
Increase (decrease) in accounts payable	(30,408)
Increase (decrease) in compensated absences	296
Net cash flows from operating activities	$ 227,629

OTHER COMMUNICATIONS FROM INDEPENDENT AUDITORS

This page intentionally left blank

Independent Auditors' Report on Internal Control Over Financial Reporting and on Compliance and Other Matters Based on an Audit of Financial Statements Performed in Accordance with *Government Auditing Standards*

The Honorable Mayor and City Council
West Wendover, Nevada

We have audited, in accordance with the auditing standards generally accepted in the United States of America and the standards applicable to financial audits contained in *Government Auditing Standards* issued by the Comptroller General of the United States, the financial statements of the governmental activities, the business-type activities, the aggregate discretely presented component units, each major fund, and the aggregate remaining fund information of City of West Wendover, Nevada, as of and for the year ended June 30, 2022, and the related notes to the financial statements, which collectively comprise City of West Wendover, Nevada 's basic financial statements and have issued our report thereon dated October 27, 2022.

Internal Control Over Financial Reporting

In planning and performing our audit of the financial statements, we considered City of West Wendover, Nevada's internal control over financial reporting (internal control) as a basis for designing audit procedures that are appropriate in the circumstances for the purpose of expressing our opinions on the financial statements, but not for the purpose of expressing an opinion on the effectiveness of City of West Wendover, Nevada's internal control. Accordingly, we do not express an opinion on the effectiveness of City of West Wendover, Nevada's internal control.

A *deficiency in internal control* exists when the design or operation of a control does not allow management or employees, in the normal course of performing their assigned functions, to prevent, or detect and correct, misstatements on a timely basis. A *material weakness* is a deficiency, or a combination of deficiencies, in internal control, such that there is a reasonable possibility that a material misstatement of the entity's financial statements will not be prevented, or detected and corrected on a timely basis. A *significant deficiency* is a deficiency, or a combination of deficiencies, in internal control that is less severe than a material weakness, yet important enough to merit attention by those charged with governance.

Our consideration of internal control was for the limited purpose described in the first paragraph of this section and was not designed to identify all deficiencies in internal control that might be material weaknesses or significant deficiencies. Given these limitations, during our audit we did not identify any deficiencies in internal control that we consider to be material weaknesses. However, material weaknesses may exist that have not been identified.

HintonBurdick.com 888-566-1277

Compliance and Other Matters

As part of obtaining reasonable assurance about whether City of West Wendover, Nevada's financial statements are free from material misstatement, we performed tests of its compliance with certain provisions of laws, regulations, contracts, and grant agreements, noncompliance with which could have a direct and material effect on the financial statements including on whether the funds established by the City, as listed in Nevada Revised Statutes (NRS) 354.624 (5)(a)(1 to 5), complied with the express purposes required by NRS 354.6241. However, providing an opinion on compliance with those provisions was not an objective of our audit, and accordingly, we do not express such an opinion. The results of our tests disclosed no instances of noncompliance or other matters that are required to be reported under *Government Auditing Standards*.

Purpose of this Report

The purpose of this report is solely to describe the scope of our testing of internal control and compliance and the results of that testing, and not to provide an opinion on the effectiveness of the entity's internal control or on compliance. This report is an integral part of an audit performed in accordance with *Government Auditing Standards* in considering the entity's internal control and compliance. Accordingly, this communication is not suitable for any other purpose.

HintonBurdick, PLLC
St. George, Utah
October 27, 2022

CITY OF WEST WENDOVER, NEVADA
Schedule of Fees Imposed Subject to the Provision of NRS 354.5989
Limitation on Fees for Business Licenses
For the Year ended June 30, 2022

Flat Fixed Fees:

Business license revenue adjusted base at June 30, 2021		$ 22,162
Adjustment to Base:		
1. Percentage change in population of the local government	1.2%	
2. Percentage increase in the Consumer Price Index for the year ending on December 31, next preceding the year for which the limit is being calculated	7.0%	8.2%
Increase in base		1,817
Adjusted base at June 30, 2022		23,979
Actual revenue		17,500
Amount over (under) allowable amount		$ (6,479)

This page intentionally left blank

CITY OF WEST WENDOVER, NEVADA

SINGLE AUDIT ACT REPORT

FOR THE YEAR ENDED JUNE 30, 2022

CITY OF WEST WENDOVER, NEVADA

Table of Contents

PAGE

Independent Auditor's Report on Internal Control Over Financial Reporting and on Compliance and Other Matters Based on an Audit of Financial Statements Performed in Accordance with *Government Auditing Standards* 1

Independent Auditor's Report on Compliance for Each Major Federal Program And Report on Internal Control over Compliance In Accordance With Uniform Guidance 3

Schedule of Findings and Questioned costs:

Summary of Auditors' Results 8

Financial Statement Findings 9

Federal Award Findings and Questioned Costs 10

Summary Schedule of Prior Audit Findings 10

Schedule of Expenditures of Federal Awards 11

Notes to the Schedule of Expenditures of Federal Awards 12

Independent Auditors' Report on Internal Control Over Financial Reporting and on Compliance and Other Matters Based on an Audit of Financial Statements Performed in Accordance with *Government Auditing Standards*

The Honorable Mayor and
City Council
City of West Wendover, Nevada

We have audited, in accordance with the auditing standards generally accepted in the United States of America and the standards applicable to financial audits contained in Government Auditing Standards issued by the Comptroller General of the United States, the financial statements of the governmental activities, the business-type activities, the aggregate discretely presented component unit, each major fund, and the aggregate remaining fund information of the City of West Wendover, Nevada, as of and for the year ended June 30, 2022, and the related notes to the financial statements, which collectively comprise the City of West Wendover, Nevada's basic financial statements and have issued our report thereon dated October 28, 2022.

Internal Control over Financial Reporting

In planning and performing our audit of the financial statements, we considered the City of West Wendover, Nevada's internal control over financial reporting (internal control) as a basis for designing audit procedures that are appropriate in the circumstances for the purpose of expressing our opinions on the financial statements, but not for the purpose of expressing an opinion on the effectiveness of the City of West Wendover, Nevada's internal control. Accordingly, we do not express an opinion on the effectiveness of the City of West Wendover, Nevada's internal control.

A deficiency in internal control exists when the design or operation of a control does not allow management or employees, in the normal course of performing their assigned functions, to prevent, or detect and correct, misstatements on a timely basis. A material weakness is a deficiency, or a combination of deficiencies, in internal control such that there is a reasonable possibility that a material misstatement of the entity's financial statements will not be prevented, or detected and corrected on a timely basis. A significant deficiency is a deficiency, or a combination of deficiencies, in internal control that is less severe than a material weakness, yet important enough to merit attention by those charged with governance.

Our consideration of internal control was for the limited purpose described in the first paragraph of this section and was not designed to identify all deficiencies in internal control that might be material weaknesses or significant deficiencies and therefore, material weaknesses or significant deficiencies may exist that were not identified. Given these limitations, during our audit we did not identify any deficiencies in internal control that we consider to be material weaknesses. However, material weaknesses may exist that have not been identified.

Compliance and Other Matters

As part of obtaining reasonable assurance about whether the City of West Wendover, Nevada's financial statements are free from material misstatement, we performed tests of its compliance with certain provisions of laws, regulations, contracts, and grant agreements, noncompliance with which could have a direct and material effect on the financial statements. However, providing an opinion on compliance with those provisions was not an objective of our audit, and accordingly, we do not express such an opinion. The results of our tests disclosed no instances of noncompliance or other matters that are required to be reported under Government Auditing Standards.

Purpose of this Report

The purpose of this report is solely to describe the scope of our testing of internal control and compliance and the results of that testing, and not to provide an opinion on the effectiveness of the entity's internal control or on compliance. This report is an integral part of an audit performed in accordance with Government Auditing Standards in considering the entity's internal control and compliance. Accordingly, this communication is not suitable for any other purpose.

HintonBurdick, PLLC
St. George, Utah
October 28, 2022

Independent Auditor's Report on
Compliance for Each Major Federal Program and
Report on Internal Control over Compliance
in Accordance with the Uniform Guidance

The Honorable Mayor and
City Council
City of West Wendover, Nevada

Report on Compliance for Each Major Federal Program

Opinion on Each Major Federal Program

We have audited the City of West Wendover, Nevada's compliance with the types of compliance requirements identified as subject to audit in the OMB *Compliance Supplement* that could have a direct and material effect on each of the City of West Wendover, Nevada's major federal programs for the year ended June 30, 2022. The City of West Wendover, Nevada's major federal programs are identified in the summary of auditor's results section of the accompanying schedule of findings and questioned costs.

In our opinion, the City of West Wendover, Nevada complied, in all material respects, with the compliance requirements referred to above that could have a direct and material effect on each of its major federal programs for the year ended June 30, 2022.

Basis for Opinion on Each Major Federal Program

We conducted our audit of compliance in accordance with auditing standards generally accepted in the United States of America (GAAS); the standards applicable to financial audits contained in *Government Auditing Standards* issued by the Comptroller General of the United States (*Government Auditing Standards*); and the audit requirements of Title 2 U.S. *Code of Federal Regulations* Part 200, *Uniform Administrative Requirements, Cost Principles, and Audit Requirements for Federal Awards* (Uniform Guidance). Our responsibilities under those standards and the Uniform Guidance are further described in the Auditor's Responsibilities for the Audit of Compliance section of our report.

We are required to be independent of the City of West Wendover, Nevada and to meet our other ethical responsibilities, in accordance with relevant ethical requirements relating to our audit. We believe that the audit evidence we have obtained is sufficient and appropriate to provide a basis for our opinion on compliance for each major federal program. Our audit does not provide a legal determination of the City of West Wendover, Nevada's compliance with the compliance requirements referred to above.

Responsibilities of Management for Compliance

Management is responsible for compliance with the requirements referred to above and for the design, implementation, and maintenance of effective internal control over compliance with the requirements of laws, statutes, regulations, rules and provisions of contracts or grant agreements applicable to the City of West Wendover, Nevada's federal programs.

Auditor's Responsibilities for the Audit of Compliance

Our objectives are to obtain reasonable assurance about whether material noncompliance with the compliance requirements referred to above occurred, whether due to fraud or error, and express an opinion on the City of West Wendover, Nevada's compliance based on our audit. Reasonable assurance is a high level of assurance but is not absolute assurance and therefore is not a guarantee that an audit conducted in accordance with GAAS, *Government Auditing Standards*, and the Uniform Guidance will always detect material noncompliance when it exists. The risk of not detecting material noncompliance resulting from fraud is higher than for that resulting from error, as fraud may involve collusion, forgery, intentional omissions, misrepresentations, or the override of internal control. Noncompliance with the compliance requirements referred to above is considered material, if there is a substantial likelihood that, individually or in the aggregate, it would influence the judgment made by a reasonable user of the report on compliance about the City of West Wendover, Nevada's compliance with the requirements of each major federal program as a whole.

In performing an audit in accordance with GAAS, *Government Auditing Standards*, and the Uniform Guidance, we:

- Exercise professional judgment and maintain professional skepticism throughout the audit.
- Identify and assess the risks of material noncompliance, whether due to fraud or error, and design and perform audit procedures responsive to those risks. Such procedures include examining, on a test basis, evidence regarding the City of West Wendover, Nevada's compliance with the compliance requirements referred to above and performing such other procedures as we considered necessary in the circumstances.
- Obtain an understanding of the City of West Wendover, Nevada's internal control over compliance relevant to the audit in order to design audit procedures that are appropriate in the circumstances and to test and report on internal control over compliance in accordance with the Uniform Guidance, but not for the purpose of expressing an opinion on the effectiveness of the City of West Wendover, Nevada's internal control over compliance. Accordingly, no such opinion is expressed.

We are required to communicate with those charged with governance regarding, among other matters, the planned scope and timing of the audit and any significant deficiencies and material weaknesses in internal control over compliance that we identified during the audit.

Report on Internal Control Over Compliance

A *deficiency in internal control over compliance* exists when the design or operation of a control over compliance does not allow management or employees, in the normal course of performing their assigned functions, to prevent, or detect and correct, noncompliance with a type of compliance requirement of a federal program on a timely basis. A *material weakness in internal control over compliance* is a deficiency, or a combination of deficiencies, in internal control over compliance, such that there is a reasonable possibility that material noncompliance with a type of compliance requirement of a federal program will not be prevented, or detected and corrected, on a timely basis. A *significant deficiency in internal control over compliance* is a deficiency, or a combination of deficiencies, in internal control over compliance with a type

of compliance requirement of a federal program that is less severe than a material weakness in internal control over compliance, yet important enough to merit attention by those charged with governance.

Our consideration of internal control over compliance was for the limited purpose described in the Auditor's Responsibilities for the Audit of Compliance section above and was not designed to identify all deficiencies in internal control over compliance that might be material weaknesses or significant deficiencies in internal control over compliance. Given these limitations, during our audit we did not identify any deficiencies in internal control over compliance that we consider to be material weaknesses, as defined above. However, material weaknesses or significant deficiencies in internal control over compliance may exist that were not identified.

Our audit was not designed for the purpose of expressing an opinion on the effectiveness of internal control over compliance. Accordingly, no such opinion is expressed.

The purpose of this report on internal control over compliance is solely to describe the scope of our testing of internal control over compliance and the results of that testing based on the requirements of the Uniform Guidance. Accordingly, this report is not suitable for any other purpose.

Report on Schedule of Expenditures of Federal Awards Required by the Uniform Guidance

We have audited the financial statements of the City of West Wendover, Nevada as of and for the year ended June 30, 2022, and have issued our report thereon dated October 28, 2022, which contained an unmodified opinion on those financial statements. Our audit was performed for the purpose of forming an opinion on the financial statements as a whole. The accompanying schedule of expenditures of federal awards is presented for purposes of additional analysis as required by the Uniform Guidance and is not a required part of the financial statements. Such information is the responsibility of management and was derived from and relates directly to the underlying accounting and other records used to prepare the financial statements. The information has been subjected to the auditing procedures applied in the audit of the financial statements and certain additional procedures, including comparing and reconciling such information directly to the underlying accounting and other records used to prepare the financial statements or to the financial statements themselves, and other additional procedures in accordance with auditing standards generally accepted in the United States of America. In our opinion, the schedule of expenditures of federal awards is fairly stated in all material respects in relation to the financial statements as a whole.

HintonBurdick, PLLC
St. George, Utah
October 28, 2022

CITY OF WEST WENDOVER, NEVADA
Schedule of Findings and Questioned Costs
For the Year Ended June 30, 2022

Section I - Summary of Auditors' Results

Financial Statements

Type of auditor's report issued:	Unmodified
Internal control over financial reporting:	
• Material weakness (es) identified?	____ yes __X__ no
• Significant deficiency (ies) identified that are not considered to be material weaknesses?	____ yes __X__ none reported
Noncompliance material to financial statements noted?	___ yes __X__ no

Federal Awards

Internal Control over major programs:	
• Material weakness (es) identified?	____ yes __X__ no
• Significant deficiency (ies) identified that are not considered to be material weaknesses?	____ yes __X__ none reported
Type of auditor's report issued on compliance for major programs:	Unmodified
Any audit findings disclosed that are required to be reported in accordance with 2 CFR 200.516(a)?	____ yes __X__ no

Identification of major programs.

CFDA Number(s)	Name of Federal Program or Cluster
10.766	Community Facilities Loans and Grants
21.027	State and Local Fiscal Recovery Funds

Dollar threshold used to distinguish between type A and type B programs:	$ 750,000
Auditee qualified as low-risk auditee?	____ yes __X__ no

CITY OF WEST WENDOVER, NEVADA
Schedule of Findings and Questioned Costs
For the Year Ended June 30, 2022

Section II - Financial Statement Findings

INTERNAL CONTROL OVER FINANCIAL REPORTING:

Material Weaknesses:

None noted

Significant Deficiencies:

None noted

COMPLIANCE AND OTHER MATTERS:

Compliance:

None noted

Other Matters:

None noted

CITY OF WEST WENDOVER, NEVADA
Schedule of Findings and Questioned Costs
For the Year Ended June 30, 2022

Section III - Federal Award Findings and Questioned Costs

None noted

Section IV – Summary Schedule of Prior Audit Findings

None noted

CITY OF WEST WENDOVER, NEVADA
Schedule of Expenditures of Federal Awards
For the Year Ended June 30, 2022

Federal Grantor/Pass-Through Grantor/Program or Cluster Title	Federal CFDA Number	Pass-through Entity Identifying Number	Pass-Through to Subrecipients	Expenditures
US Department of Agriculture				
Community Facilities Loans and Grants	10.766		-	$ 855,253
US Department of Housing and Urban Development				
CDBG Grant - Downtown Development	14.228		-	203,011
US Department of Transportation				
Passed through the Nevada Department of Public Safety				
Joining Forces Grant	20.600	69A37520300004020NV0	-	6,972
Joining Forces Grant	20.600	69A37521300004020NV0	-	822
Joining Forces Grant	20.608	69A37520300001640NVA	-	3,368
			-	11,162
US Department of Justice				
Passed through the Nevada Office of Criminal Justice				
2020 COVID Emergency Funding Program (CESF)	16.034	20-CESF-42	-	64,420
COPS JUST GRANT	16.710		-	130,475
			-	194,895
US Department of Treasury				
SLFRF Recovery Grant	21.027		-	2,870,346
Dept of Public Safety - Nevada DPS-OTS				
Emergency Management Performance Grant (EMPG)	97.042	20 R-1	-	24,208
Emergency Management Performance Grant (EMPG)	97.042	20 R-1S, R-2S, R-3S, R-4S	-	14,272
Emergency Management Performance Grant (EMPG)	97.042	20 R-2	-	209
Emergency Management Performance Grant (EMPG)	97.042	21 R-1, R-2 R-3	-	29,531
			-	68,220
Total expenditure of federal awards			$ -	$ 4,202,887

The accompanying notes are an integral part of this schedule.

Reporting Entity:

The accompanying schedule of expenditures of federal awards (schedule) presents all activity or expenditure or all federal award programs of the City of West Wendover, Nevada (City) for the year ended June 30, 2022. The City's reporting entity is defined in note 1 of the basic financial statements. All expenditure of federal awards received directly from federal agencies as well as federal awards passed through other government agencies are included in the schedule.

Basis of Accounting:

This accompanying schedule has been prepared on the modified accrual basis of accounting. The information in this schedule is presented in accordance with the requirements of Title 2 U.S. *Code of Federal Regulations* Part 200, *Uniform Administrative Requirements, Cost Principles, and Audit Requirements for Federal Awards* (Uniform Guidance).

Relationship to the Basic Financial Statements:

Expenditures of federal awards have been reported in the following funds.

Governmental-Type Activities:		
Major Funds:		
General Fund	$	896,143
Recreation Fund		503,730
Capital Projects Fund		1,060,764
		2,460,637
Non-major funds:		
Court Admin		2,152
Welcom Center		48,012
Wendover Will		4,803
Ad Valorem		11,308
Johnson Springs		154,316
Health Fund		159,917
		380,508
Business-Type Activities:		
Major Funds:		
Water Fund		238,048
Sewer Fund		816,491
Compost Fund		307,203
		1,361,742
	$	4,202,887

Indirect Cost Rate:

The City did not elect to use the 10% de minimis indirect cost rate for fiscal year 2022.

Federal Loans and Loan Guarantee Programs Outstanding:

The City is planning to receive funding in a future fiscal year from the United States Department of Agriculture under CFDA #10.766 Community and Facilities Loans and Grants program. In fiscal year 2022, the City issued Consolidated Tax Revenue Interim Debenture Series 2022 to begin the federally funded project and received loan proceeds of $855,253 as shown on the schedule of federal awards. This interim debenture will be replaced with a USDA loan in the future.

Subrecipients:

The City did not have any subrecipents for the fiscal year 2022.

FINANCIAL STATEMENTS

FOR THE FISCAL YEAR ENDED JUNE 30, 2021

WITH REPORT OF

INDEPENDENT CERTIFIED PUBLIC ACCOUNTANTS

CITY OF WEST WENDOVER, NEVADA

Table of Contents

Page

FINANCIAL SECTION

Independent Auditors' Report....1

Management's Discussion and Analysis....5

Basic Financial Statements:

Government-wide Financial Statements:

Statement of Net Position....14

Statement of Activities....15

Fund Financial Statements:

Balance Sheet – Governmental Funds....16

Reconciliation of the Balance Sheets of Governmental Funds to the Statement of Net Position....17

Statement of Revenues, Expenditures, and Changes in Fund Balances – Governmental Funds....18

Reconciliation of the Statement of Revenues, Expenditures, and Changes in Fund Balances of Governmental Funds to the Statement of Activities....19

Statement of Net Position – Proprietary Funds....20

Statement of Revenues, Expenses, and Changes in Net Position – Proprietary Funds....21

Statement of Cash Flows – Proprietary Funds....22

Notes to the Financial Statements....23

Required Supplementary Information:

Schedules of Revenues, Expenditures, and Changes in Fund Balances – Budget and Actual

General Fund (Detailed)....55

Recreation Fund....58

Schedule of the Proportionate Share of the Net Pension Liability....59

Schedule of Contributions....60

CITY OF WEST WENDOVER, NEVADA

Table of Contents (Continued)

Supplementary Information

Combining and Individual Fund Statements and Schedules:
Combining Balance Sheet – Non-major Governmental Funds 63

Combining Statement of Revenues, Expenditures and Changes in
Fund Balances – Non-major Governmental Funds 64

Nonmajor Governmental Fund Schedules of Revenues, Expenditures, and
Changes in Fund Balances – Budget and Actual

Seizure Forfeiture Fund 65
Court Administrative Assessments Fund.....66
Welcome Center Fund 67
Wendover Will Landmark Fund 68
Grant Fund 69
Capital Projects Fund.....70
Ad Valorem Capital Projects Fund 71

Major Business-Type Funds:
Water fund:
Schedule of Revenues, Expenses – Budget and Actual 73
Sewer fund:
Schedule of Revenues, Expenses – Budget and Actual 74
Garbage / Compost Facility fund:
Schedule of Revenues, Expenses – Budget and Actual 75

Component Unit Supplementary Schedules:
Statement of Net Position 77
Schedule of Revenues, Expenses – Budget and Actual 78
Statement of Cash Flows 79

OTHER COMMUNICATIONS FROM INDEPENDENT AUDITORS:

Report on Internal Control over Financial Reporting and Compliance 82

Report on Compliance with State Fiscal Laws 84

Schedule of Fees Imposed Subject to the Provision of NRS 354.5989 86

Findings and Recommendations 88

Corrective Action Plan 90

FINANCIAL SECTION

This page intentionally left blank

HINTON BURDICK
CPAs & ADVISORS

Independent Auditors' Report

The Honorable Mayor and City Council
West Wendover, Nevada

Report on the Financial Statements

We have audited the accompanying financial statements of the governmental activities, the business-type activities, the aggregate discretely presented component units, each major fund, and the aggregate remaining fund information of City of West Wendover, Nevada as of and for the year ended June 30, 2021, and the related notes to the financial statements, which collectively comprise the City's basic financial statements as listed in the table of contents.

Management's Responsibility for the Financial Statements

Management is responsible for the preparation and fair presentation of these financial statements in accordance with accounting principles generally accepted in the United States of America; this includes the design, implementation, and maintenance of internal control relevant to the preparation and fair presentation of financial statements that are free from material misstatement, whether due to fraud or error.

Auditor's Responsibility

Our responsibility is to express opinions on these financial statements based on our audit. We conducted our audit in accordance with auditing standards generally accepted in the United States of America and the standards applicable to financial audits contained in *Government Auditing Standards*, issued by the Comptroller General of the United States. Those standards require that we plan and perform the audit to obtain reasonable assurance about whether the financial statements are free from material misstatement.

An audit involves performing procedures to obtain audit evidence about the amounts and disclosures in the financial statements. The procedures selected depend on the auditor's judgment, including the assessment of the risks of material misstatement of the financial statements, whether due to fraud or error. In making those risk assessments, the auditor considers internal control relevant to the entity's preparation and fair presentation of the financial statements in order to design audit procedures that are appropriate in the circumstances, but not for the purpose of expressing an opinion on the effectiveness of the entity's internal control. Accordingly, we express no such opinion. An audit also includes evaluating the appropriateness of accounting policies used and the reasonableness of significant accounting estimates made by management, as well as evaluating the overall presentation of the financial statements.

We believe that the audit evidence we have obtained is sufficient and appropriate to provide a basis for our audit opinions.

Opinions

In our opinion, the financial statements referred to above present fairly, in all material respects, the respective financial position of the governmental activities, the business-type activities, the aggregate discretely presented component units, each major fund, and the aggregate remaining fund information of the City of West Wendover, Nevada, as of June 30, 2021, and the respective changes in financial position, and, where applicable, cash flows thereof for the year then ended in accordance with accounting principles generally accepted in the United States of America.

Other Matters

Required Supplementary Information

Accounting principles generally accepted in the United States of America require that the management's discussion and analysis, budgetary comparison information, the schedule of proportionate share of the net pension liability and the schedule of contributions, as listed in the table of contents, be presented to supplement the basic financial statements. Such information, although not a part of the basic financial statements, is required by the Governmental Accounting Standards Board, who considers it to be an essential part of financial reporting for placing the basic financial statements in an appropriate operational, economic, or historical context. We have applied certain limited procedures to the required supplementary information in accordance with auditing standards generally accepted in the United States of America, which consisted of inquiries of management about the methods of preparing the information and comparing the information for consistency with management's responses to our inquiries, the basic financial statements, and other knowledge we obtained during our audit of the basic financial statements. We do not express an opinion or provide any assurance on the information because the limited procedures do not provide us with sufficient evidence to express an opinion or provide any assurance.

Other Information

Our audit was conducted for the purpose of forming opinions on the financial statements that collectively comprise the City of West Wendover, Nevada's basic financial statements. The major fund budgetary comparison schedules, the combining and individual non-major fund budgetary schedules and component unit supplementary schedules, as listed in the table of contents, are presented for purposes of additional analysis and are not a required part of the basic financial statements.

The major fund budgetary comparison schedules, the combining and individual non-major fund budgetary schedules, and the component unit supplementary schedules as listed in the table of contents, are the responsibility of management and were derived from and relate directly to the underlying accounting and other records used to prepare the basic financial statements. Such information has been subjected to the auditing procedures applied in the audit of the basic financial statements and certain additional procedures, including comparing and reconciling such information directly to the underlying accounting and other records used to prepare the basic financial statements or to the basic financial statements themselves, and other additional procedures in accordance with auditing standards generally accepted in the United States of America. In our opinion, the major fund budgetary comparison schedules, the combining and individual non-major fund budgetary schedules, and the component unit supplementary schedules as listed in the table of contents, are fairly stated in all material respects in relation to the basic financial statements as a whole.

Other Reporting Required by *Government Auditing Standards*

In accordance with *Government Auditing Standards*, we have also issued our report dated September 30, 2021, on our consideration of the City of West Wendover, Nevada's internal control over financial reporting and on our tests of its compliance with certain provisions of laws, regulations, contracts, and grant agreements and other matters. The purpose of that report is to describe the scope of our testing of internal control over financial reporting and compliance and the results of that testing, and not to provide an opinion on internal control over financial reporting or on compliance. That report is an integral part of an audit performed in accordance with *Government Auditing Standards* in considering City of West Wendover, Nevada's internal control over financial reporting and compliance.

HintonBurdick, PLLC
St. George, Utah
September 30, 2021

This page intentionally left blank

CITY OF WEST WENDOVER, NEVADA
MANAGEMENT'S DISCUSSION AND ANALYSIS

As management of the City of West Wendover (City), we offer readers of the City's financial statements this narrative overview and analysis of the financial activities of the City for the fiscal year ended June 30, 2021. Please read it in conjunction with the accompanying basic financial statements.

FINANCIAL HIGHLIGHTS

- Total assets plus deferred outflows exceed total liabilities plus deferred inflows (net position) by $27.9 million at the close of the fiscal year.
- Total net position increased by $1.1 million from the prior year.
- Governmental activities net position increased by $1.2 million. Business-type net position decreased by $53 thousand.
- Total revenues from all governmental sources were $10.8 million and the total cost of all City programs were $9.6 million.
- The General Fund revenues exceeded expenditures, excluding transfers, by $1.7 million.
- At the end of the current fiscal year, unassigned fund balance for the General Fund was $3,519,523, or 56% of total General Fund expenditures, excluding transfers.

USING THIS ANNUAL REPORT

This annual report consists of a series of financial statements. The three components of the financial statements are: (1) Government-wide financial statements which include the Statement of Net Position and the Statement of Activities. These statements provide information about the activities of the City as a whole. (2) Fund financial statements tell how these services were financed in the short term as well as what remains for future spending. Fund financial statements also report the City's operations in more detail than the government-wide statements by providing information about the City's most significant funds. (3) Notes to the financial statements.

Reporting the City as a Whole

The Statement of Net Position and the Statement of Activities (Government-wide)

A frequently asked question regarding the City's financial health is whether the year's activities contributed positively to the overall financial well-being. The Statement of Net Position and the Statement of Activities report information about the City as a whole and about its activities in a way that helps answer this question. These statements include *all* assets and liabilities using the *accrual basis of accounting*, which is similar to the accounting used by most private-sector companies. All of the current year's revenues and expenses are taken into account regardless of when cash is received or paid.

These two statements report the City's net position and changes in them. Net position, the difference between assets and liabilities, are one way to measure the City's financial health, or financial position. Over time, increases or decreases in net position are an indicator of whether the financial health is improving or deteriorating. However, it is important to consider other non-financial factors such as changes in the City's property tax base or condition of the City's roads to accurately assess the overall health of the City.

The Statement of Net Position and the Statement of Activities, present information about the following:

- Government activities – All of the City's basic services are considered to be governmental activities, including general government, judicial, public safety, community development, health and sanitation, culture and recreation, community support, and interest on long-term debt. Consolidated tax, room tax, ad valorem tax, county gaming tax, franchise tax, right of way tolls, motor vehicle tax, and unrestricted investment earnings finance these activities.

- Proprietary activities/Business type activities – The City charges a fee to customers to cover all or most of the cost of the services provided. The City's water, sewer, and garbage / compost systems are reported in this category.

Reporting the City's Most Significant Funds

Fund Financial Statements

The fund financial statements provide detailed information about the most significant funds—not the City as a whole. Some funds are required to be established by State law and others are established by City resolution or by bond covenants. However, management establishes many other funds which aid in the management of money for particular purposes or meet legal responsibilities associated with the usage of certain taxes, grants, and other money. The City's two kinds of funds, *governmental* and *proprietary*, use different accounting approaches as explained below.

- *Governmental funds* – Most of the City's basic services are reported in governmental funds. Governmental funds focus on how resources flow in and out with the balances remaining at year-end that are available for spending. These funds are reported using an accounting method called the *modified accrual* accounting method, which measures cash and all other *financial* assets that can readily be converted to cash. The governmental fund statements provide a detailed *short-term view* of the City's general government operations and the basic services it provides. Government fund information shows whether there are more or fewer financial resources that can be spent in the near future to finance the City's programs. We describe the relationship (or differences) between governmental *activities* (reported in the Statement of Net Position and the Statement of Activities) and governmental *funds* in a reconciliation included with the Basic Financial Statements.

- *Proprietary funds* – The City maintains enterprise and internal service funds under this category. Enterprise funds are used to account for functions presented in the business-type section of the government-wide financial statements. Internal service funds are used to account for the financing of goods or services provided by one department or agency to other departments or agencies of the government.

Notes to the Financial Statements

Notes to the financial statements are included to provide information that is crucial to the full and complete understanding of the data provided in the financial statements.

GOVERNMENT-WIDE FINANCIAL ANALYSIS

Net position may serve over time as a useful indicator of the City's financial position. The City's combined assets exceed liabilities by $27.9 million as of June 30, 2021 as shown in the following condensed statement of net position. The City has chosen to account for its water, sewer, and garbage/compost operations in enterprise funds which are shown as Business Activities.

City of West Wendover, Nevada
Statement of Net Position

	Governmental activities		Business-type activities		Combined Total	
Assets	06/30/21	06/30/20	06/30/21	06/30/20	06/30/21	06/30/20
Current and other assets	$ 5,470,345	$ 3,883,394	$ 6,827,828	$ 6,360,349	$ 12,298,173	$ 10,243,743
Net capital assets	18,913,646	19,423,684	16,782,256	17,817,362	35,695,902	37,241,046
Total assets	24,383,991	23,307,078	23,610,084	24,177,711	47,994,075	47,484,789
Deferred outflows	1,136,058	1,152,807	245,744	241,216	1,381,802	1,394,023
Liabilities						
Current liabilities	876,907	489,749	82,794	107,171	959,701	596,920
Long-term liabilities outstanding	11,898,054	11,987,315	7,566,728	7,973,746	19,464,782	19,961,061
Total liabilities	12,774,961	12,477,064	7,649,522	8,080,917	20,424,483	20,557,981
Deferred inflows	843,799	1,195,268	182,525	250,101	1,026,324	1,445,369
Net position:						
Net investment in capital assets	13,890,197	14,030,140	12,799,552	13,325,707	26,689,749	27,355,847
Restricted	231,268	182,444	786,745	607,722	1,018,013	790,166
Unrestricted	(2,220,176)	(3,425,031)	2,437,484	2,154,480	217,308	(1,270,551)
Total net position	$ 11,901,289	$ 10,787,553	$ 16,023,781	$ 16,087,909	$ 27,925,070	$ 26,875,462

Governmental Activities

The cost of all Governmental activities this year was $9,608,743. As shown on the statement of Changes in Net Position on the following page, $1,500,773 of this cost was paid for by those who directly benefited from the programs; $1,267,333 was subsidized by grants received from other governmental organizations for both capital and operating activities. Overall governmental program revenues, including intergovernmental aid and fees for services were $2,768,106. General taxes, asset sales, and other general revenues totaled $7,991,505.

The City's programs include: general government, judicial, public safety, public works, community development, health and sanitation, culture and recreation, community support, and interest on long-term debt. Each programs' total cost is presented below.

City of West Wendover, Nevada
Changes in Net Position

	Governmental activities		Business-type activities		Combined Total	
	06/30/21	06/30/20	06/30/21	06/30/20	06/30/21	06/30/20
Revenues:						
Program revenues:						
Charges for services	$ 1,485,953	$ 1,163,954	$ 3,805,092	$ 3,752,329	$ 5,291,045	$ 4,916,283
Operating grants	1,039,804	320,332	-	-	1,039,804	320,332
Capital grants	227,528	193,400	1,496	15,664	229,024	209,064
General revenues:						
State shared revenue (unrestricted)	3,174,768	3,011,445	-	-	3,174,768	3,011,445
Room taxes	1,602,940	1,599,360	-	-	1,602,940	1,599,360
Ad valorem taxes	1,711,478	1,606,885	-	-	1,711,478	1,606,885
County gaming taxes	513,765	385,985	-	-	513,765	385,985
Franchise taxes	380,431	372,852	-	-	380,431	372,852
Right of way toll	255,582	295,900	-	-	255,582	295,900
Motor vehicle taxes	109,155	104,460	-	-	109,155	104,460
Other taxes	5,363	5,411	-	-	5,363	5,411
Investment earnings	2,838	11,619	40,083	84,103	42,921	95,722
Gain on sale of capital assets	202,324	-	-	-	202,324	-
Miscellaneous revenues	10,551	2,001	55,705	31,493	66,256	33,494
Total revenues	10,722,480	9,073,604	3,902,376	3,883,589	14,624,856	12,957,193
Expenses:						
General government	1,719,931	1,599,406	-	-	1,719,931	1,599,406
Judicial	391,744	382,670	-	-	391,744	382,670
Public safety	4,057,492	3,361,832	-	-	4,057,492	3,361,832
Public works	705,185	564,862	-	-	705,185	564,862
Community development	430,177	438,666	-	-	430,177	438,666
Health and sanitation	153,113	180,751	-	-	153,113	180,751
Culture and recreation	1,635,301	1,724,156	-	-	1,635,301	1,724,156
Community support	314,546	303,713	-	-	314,546	303,713
Interest on long term debt	201,255	210,068	-	-	201,255	210,068
Water	-	-	1,424,927	1,544,529	1,424,927	1,544,529
Sewer	-	-	1,487,574	1,548,631	1,487,574	1,548,631
Garbage/Compost	-	-	1,054,003	1,032,851	1,054,003	1,032,851
Total expenses	9,608,744	8,766,124	3,966,504	4,126,011	13,575,248	12,892,135
Increase in net position	1,113,736	307,480	(64,128)	(242,422)	1,049,608	65,058
Net position, beginning	10,787,553	10,480,073	16,087,909	16,330,331	26,875,462	26,810,404
Net position, ending	$ 11,901,289	$ 10,787,553	$ 16,023,781	$ 16,087,909	$ 27,925,070	$ 26,875,462

Total resources available during the year to finance governmental operations were $21,510,033 consisting of Net Position at July 1, 2020 of $10.7 million, program revenues of $2.7 million and General Revenue of $8.0 million. Total cost of Governmental Activities during the year were $9.6 million; thus, Governmental Net Position increased by $1,113,736 to $11.9 million.

The following graphs compare program expenses to program revenues and provide a breakdown of revenues by source for all government activities. The charts below are derived from the Statement of Activities on page 15.

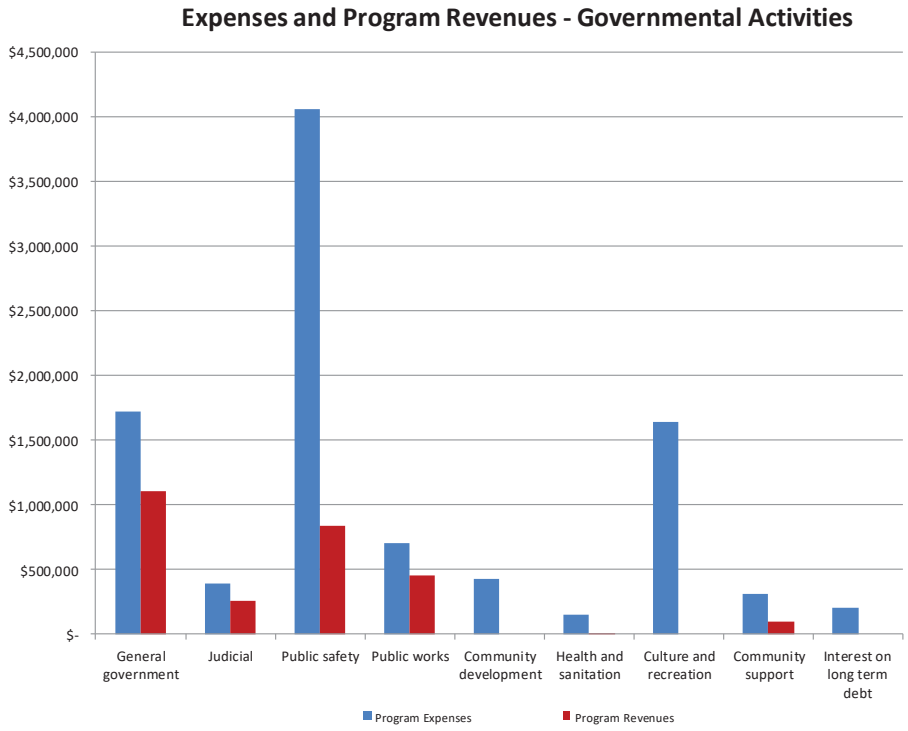

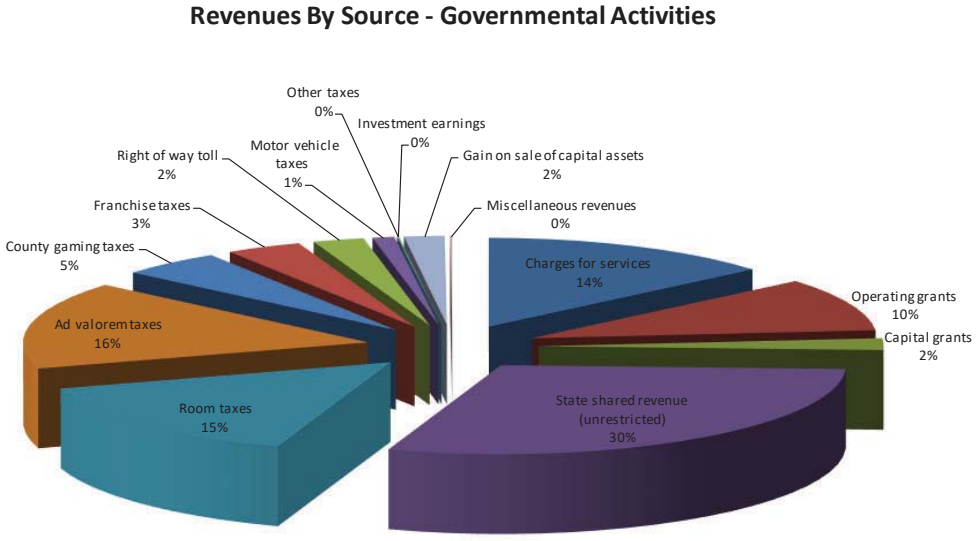

Business Type Activities

Net position of the Business Type activities at June 30, 2021, as reflected in the Statement of Net Position was $16 million. The cost of providing all Proprietary (Business Type) activities this year was $4.0 million. As shown in the Statement of Activities, the amounts paid by users of the system were $3.8 million and $1,496 was subsidized by capital grants and contributions. Unrestricted investment earnings totaled $40,083; other revenue totaled $55,705, thus, net position decreased by ($64,128).

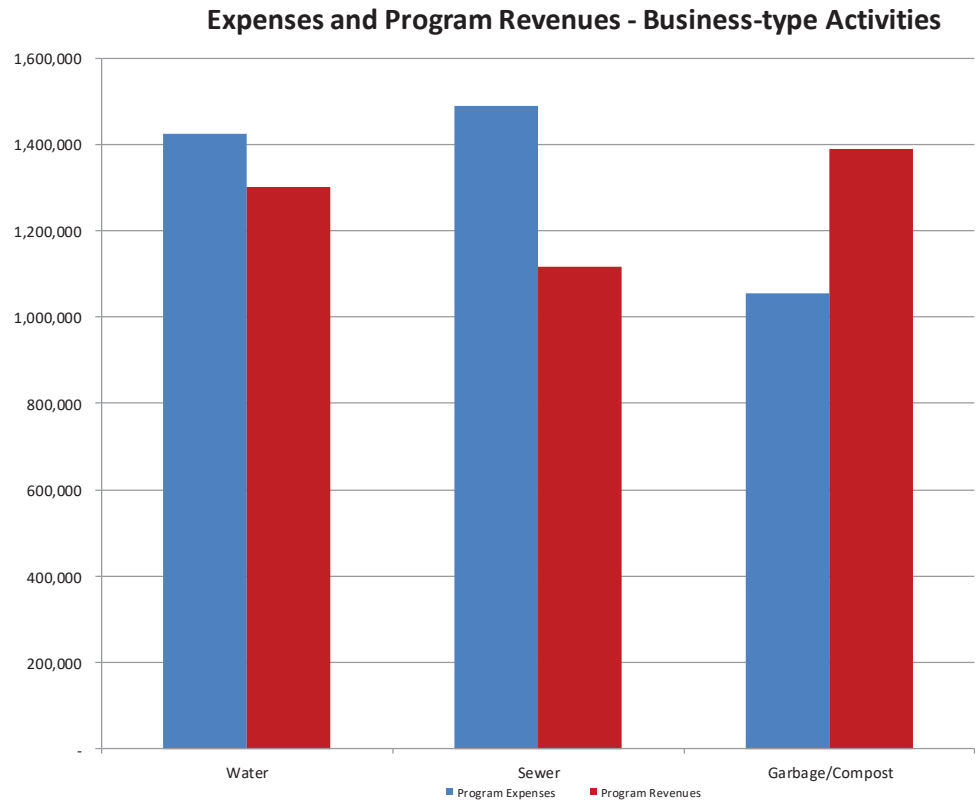

Financial Analysis of the Government's Funds

As noted earlier, the City of West Wendover uses fund accounting to ensure and demonstrate compliance with finance-related legal requirements.

Governmental funds: The focus of the City of West Wendover's governmental funds is to provide information on near-term inflows, outflows, and balances of spendable resources. Such information is useful in assessing the City of West Wendover's financing requirements. In particular, unassigned fund balance may serve as a useful measure of a government's net resources available for spending at the end of the fiscal year.

As of the end of the current fiscal year, the City of West Wendover's governmental funds reported combined ending fund balances of $4,435,702, an increase of $1,155,234 in comparison with the prior year. 79% of the total fund balance or $3,399,557 constitutes unassigned fund balance, which is available for new spending at the government's discretion.

The general fund is the chief operating fund of the City of West Wendover. At the end of the current fiscal year, unassigned fund balance in the general fund was $3,399,557, and total fund balance is $3,743,833. As a measure of liquidity, it may be useful to compare both unassigned fund balance and total fund balance to total fund expenditures. Total unassigned fund balance represents 56% of total general fund expenditures. During the year, the City of West Wendover's general fund balance was budgeted to decrease by $33,182. The total fund balance increased by $1,036,641 due primarily to increases in consolidated tax revenue and marijuana related revenues.

The recreation fund has a fund balance of $163,602, all of which is restricted for culture and recreation appropriation. Change in fund balance for the year was $45,488. Revenues were down in this fund due to the effect of the COVID 19 pandemic on room taxes.

Proprietary funds

The City of West Wendover's proprietary funds provide the same type of information found in the government-wide financial statements, but in more detail.

At June 30, 2021, unrestricted net position amounted to $921,706 for the water fund. The change in net position for fiscal year 2021 was ($58,263) and the change in net position for fiscal year 2020 was ($179,568). The increase in the change in net position was due to an increase in operating revenues and a decrease in operating expenses.

At June 30, 2021, unrestricted net position amounted to ($204,342) for the sewer fund. The change in net position for fiscal year 2021 was ($363,681) and the change in net position for fiscal year 2020 was ($426,630). The increase in the change in net position was due to a slight increase in operating revenues and a decrease operating expenses.

At June 30, 2021, unrestricted net position amounted to $1,720,120 for the garbage/compost fund. The change in net position for fiscal year 2021 was $357,816 and the change in net position for fiscal year 2020 was $363,776. Operating revenues and operating expenses had little change from the prior year.

General Fund Budgetary Highlights

Actual expenditures for the General Fund at year-end were $606,420 less than the final budget. The favorable budget to actual variance in appropriations was principally due to overall savings in services and supplies for all departments. Actual revenues were more than the final budget by $475,036.

CAPITAL ASSET AND DEBT ADMINISTRATION

Capital Assets

The capital assets of the City are those assets that are used in performance of City functions including infrastructure assets. Capital Assets include equipment, buildings, land, park facilities and roads. At the end of fiscal year 2021, net capital assets of the government activities totaled $18.9 million and the net capital assets of the business-type activities totaled $16.7 million. Depreciation on governmental-type capital assets is recognized in the Government-Wide financial statements. (See note 6 to the financial statements.)

Long Term Liabilities

At year-end, the City had $12 million in governmental type long term liabilities, and $8 million in proprietary long term liabilities. The liabilities amounts to $4,555 per capita (4,273 – 2019 population US Census Bureau Website 2019). The City's net decrease in total long term liabilities was $496,280. (See note 7 to the financial statements for detailed descriptions.)

NEXT YEAR'S BUDGET AND ECONOMIC FACTORS

In considering the City budget for fiscal year 2021-2022, the City Council and management continue to remain cautious as to the growth of revenues and expenditures as the City moves forward from the impact of COVID-19.

The City entered into a three year Collective Bargaining Agreement with the Police Officers Association, effective July 1, 2021 through June 30, 2024, which provides for a total six percent (6%) increase in wages over three (3) years. The City also entered into a three year labor agreement with Local 4041, effective July 1, 2021 through June 30, 2024, which also provides for a total six percent (6%) increase in wages over three (3) years for all classifications with the exception of dispatchers. Dispatcher and lead dispatcher classifications shall have a total nine percent (9%) increase in wages over the next three (3) fiscal years.

Projects that are reflected in the City Budget for the fiscal year 2021-2022 are as follows:

- As a carry-over from last year, the City of West Wendover anticipates the issuance of new debt during the 2021-2022 fiscal year. The debt will be issued in the form of two interim construction loans, to start the downtown development project and to build a new Fire Station facility. When construction is complete, the construction loans will be retired with Rural Development loans from USDA which have been obligated by USDA-RD.
- The acquisition of the BLM land has been completed and the City may now proceed with the downtown development project. Phase I of the City downtown development is estimated to cost $8.072M. The fire station facility is estimated to cost $8.992M.
- The City will complete street rehabilitation on Wendover Blvd for $830K, and complete pedestrian enhancement at Exit-410 for $100K

CONTACTING THE CITY'S FINANCIAL MANAGEMENT

This financial report is designed to provide our citizens, taxpayers, customers, investors and creditors with a general overview of the City's finances and to show the City's accountability for the money it receives. If you have questions about this report or need additional financial information, please contact the City's Chief Financial Officer at the City of West Wendover, 1111 N. Gene L. Jones Way, West Wendover, Nevada 89883 or visit us online at http://www.westwendovercity.com

BASIC FINANCIAL STATEMENTS

CITY OF WEST WENDOVER, NEVADA
Statement of Net Position
June 30, 2021

	Primary Government			Component Unit
	Governmental Activities	Business-type Activities	Total	Johnson Springs
Assets				
Cash and temporary investments	$ 4,061,407	$ 3,412,501	$ 7,473,908	$ 282,483
Accounts receivable, net	969,729	521,725	1,491,454	77,787
Due from component unit	-	2,049,614	2,049,614	-
Inventory	37,572	47,146	84,718	14,221
Prepaid items	87,697	10,097	97,794	-
Restricted cash	313,940	786,745	1,100,685	-
Capital assets not being depreciated:				
Land	1,416,475	111,000	1,527,475	18,000
Construction in progress	357,046	-	357,046	-
Capital assets, net of accumulated depreciation:				
Buildings, net	7,416,173	3,248,208	10,664,381	2,010,078
Improvements other than buildings, net	9,375,490	2,137,532	11,513,022	213,471
Machinery and equipment, net	348,462	871,872	1,220,334	137,614
Utility systems	-	10,413,644	10,413,644	3,160,296
Total assets	24,383,991	23,610,084	47,994,075	5,913,950
Deferred Outflows of Resources				
Deferred outflows related to pensions	1,136,058	245,744	1,381,802	20,993
Liabilities				
Accounts payable	560,570	32,128	592,698	58,252
Accrued interest payable	17,899	46,954	64,853	-
Accrued expenses	248,332	-	248,332	1,687
Due to primary government	-	-	-	2,049,614
Unearned revenue	50,106	-	50,106	-
Deposits payable	-	3,712	3,712	-
Noncurrent liabilities				
Due within one year	541,119	539,572	1,080,691	9,848
Due in more than one year	4,792,260	5,607,130	10,399,390	-
Net pension liability	6,564,675	1,420,026	7,984,701	121,309
Total liabilities	12,774,961	7,649,522	20,424,483	2,240,710
Deferred Inflows of Resources				
Deferred inflows related to pensions	843,799	182,525	1,026,324	15,593
Net Position				
Net investment in capital assets	13,890,197	12,799,552	26,689,749	3,489,845
Restricted for:				
Judicial	67,666	-	67,666	-
Culture and recreation	163,602	-	163,602	-
Debt service	-	691,745	691,745	-
Restricted for closure/postclosure		95,000	95,000	
Unrestricted	(2,220,176)	2,437,484	217,308	188,795
Total net position	$ 11,901,289	$ 16,023,781	$ 27,925,070	$ 3,678,640

The accompanying notes are an integral part of the financial statements.

CITY OF WEST WENDOVER, NEVADA
Statement of Activities
For the Year Ended June 30, 2021

Functions/Programs	Expenses	Program Revenues: Charges for Services	Program Revenues: Operating Grants & Contributions	Program Revenues: Capital Grants & Contributions	Net (Expense) Revenue and Changes in Net Position: Governmental Activities	Net (Expense) Revenue and Changes in Net Position: Business-Type Activities	Net (Expense) Revenue and Changes in Net Position: Total	Component Unit: Johnson Springs
Governmental:								
General government	$ 1,719,931	$ 1,101,862	$ -	$ -	$ (618,069)	$ -	$ (618,069)	$ -
Judicial	391,744	256,364	-	-	(135,380)	-	(135,380)	-
Public safety	4,057,492	48,607	788,354	-	(3,220,531)	-	(3,220,531)	-
Public works	705,185	75,008	155,000	227,528	(247,649)	-	(247,649)	-
Community development	430,177	-	-	-	(430,177)	-	(430,177)	-
Health and sanitation	153,113	2,124	-	-	(150,989)	-	(150,989)	-
Culture and recreation	1,635,301	-	-	-	(1,635,301)	-	(1,635,301)	-
Community support	314,546	1,988	96,450	-	(216,108)	-	(216,108)	-
Interest on long term debt	201,255	-	-	-	(201,255)	-	(201,255)	-
Total governmental activities	9,608,744	1,485,953	1,039,804	227,528	(6,855,459)	-	(6,855,459)	-
Business-type:								
Water	1,424,927	1,300,479	-	1,496	-	(122,952)	(122,952)	-
Sewer	1,487,574	1,115,614	-	-	-	(371,960)	(371,960)	-
Garbage/Compost	1,054,003	1,388,999	-	-	-	334,996	334,996	-
Total business-type activities	3,966,504	3,805,092	-	1,496	-	(159,916)	(159,916)	-
Total primary government	$ 13,575,248	$ 5,291,045	$ 1,039,804	$ 229,024				
Component Unit:								
Johnson Springs	$ 860,914	$ 721,512	$ -	$ -				(139,402)
General Revenues:								
State Shared Revenue (Unrestricted)					3,174,768	-	3,174,768	-
Room taxes					1,602,940	-	1,602,940	-
Ad valorem taxes					1,711,478	-	1,711,478	-
County gaming taxes					513,765	-	513,765	-
Franchise taxes					380,431	-	380,431	-
Right of way toll					255,582	-	255,582	-
Motor vehicle taxes					109,155	-	109,155	-
Other taxes					5,363	-	5,363	-
Investment earnings					2,838	40,083	42,921	5,188
Gain on sale of capital assets					202,324	-	202,324	-
Miscellaneous revenues					10,551	55,705	66,256	12,000
Total general revenues and transfers					7,969,195	95,788	8,064,983	17,188
Change in net position					1,113,736	(64,128)	1,049,608	(122,214)
Net position - beginning					10,787,553	16,087,909	26,875,462	3,800,854
Net position - ending					$ 11,901,289	$ 16,023,781	$ 27,925,070	$ 3,678,640

The accompanying notes are an integral part of the financial statements.

CITY OF WEST WENDOVER, NEVADA
Balance Sheet
Governmental Funds
June 30, 2021

	General Fund	Recreation Fund	Nonmajor Governmental Funds	Total Governmental Funds
Assets				
Cash and temporary investments	$ 3,372,100	$ 151,596	$ 359,549	$ 3,883,245
Accounts receivable, net	638	193,541	-	194,179
Due from other funds	34,440	-	-	34,440
Due from other governments	757,883	-	17,468	775,351
Inventory	36,265	-	1,307	37,572
Prepaid and other items	20,694	-	-	20,694
Restricted cash	440	-	313,500	313,940
Total assets	4,222,460	345,137	$ 691,824	$ 5,259,421
Liabilities				
Accounts payable	$ 180,189	$ 181,535	$ 129,117	$ 490,841
Accrued liabilities	248,332	-	-	248,332
Due to other funds	-	-	34,440	34,440
Unearned revenue	50,106	-	-	50,106
Total liabilities	478,627	181,535	163,557	823,719
Fund Balances				
Nonspendable				
Inventories	36,265	-	1,307	37,572
Prepaid items	20,694	-	-	20,694
Restricted				
Recreation district	-	163,602	-	163,602
Capital improvement projects	-	-	428,521	428,521
Courts and other judicial programs	-	-	67,666	67,666
Parks and other cultural and recreation programs	-	-	16,323	16,323
Other purposes	440	-	-	440
Committed				
Parks and other cultural and recreation programs	286,877	-	14,450	301,327
Unassigned	3,399,557	-	-	3,399,557
Total fund balances	3,743,833	163,602	528,267	4,435,702
Total liabilities and fund balances	$ 4,222,460	$ 345,137	$ 691,824	$ 5,259,421

The accompanying notes are an integral part of the financial statements.

CITY OF WEST WENDOVER, NEVADA
Reconciliation of the Balance Sheets of Governmental Funds
To the Statement of Net Position
June 30, 2021

Total fund balances - governmental funds		$ 4,435,702
Amounts reported for governmental activities in the statement of net position are different because:		
Capital assets used in governmental activities are not financial resources and therefore are not reported in the funds.		
Governmental capital assets	$ 30,509,590	
Accumulated depreciation	(11,595,944)	
		18,913,646
Long-term receivables in the governmental activities are not reported in the funds.		199
Long-term liabilities are not due and payable in the current period and therefore are not reported in the funds.		
Net pension liabilities	$ (6,564,675)	
Bonds payable	(5,023,449)	
Compensated absences	(309,930)	
Interest payable	(17,899)	
		(11,915,953)
The internal service fund is used by management to charge the cost of insurance to individual funds. The assets and liabilities of the internal service funds are included in the governmental activities in the statement of net position.		175,436
Deferred outflows and inflows of resources related to pensions are applicable to future reporting periods and, therefore, are not reported in the funds.		
Deferred outflows	$ 1,136,058	
Deferred inflows	(843,799)	
		292,259
Total net position - governmental activities		$ 11,901,289

The accompanying notes are an integral part of the financial statements.

CITY OF WEST WENDOVER, NEVADA
Statement of Revenues, Expenditures and Changes in Fund Balances
Governmental Funds
For the Year Ended June 30, 2021

	General Fund	Recreation Fund	Nonmajor Governmental Funds	Total Governmental Funds
Revenues				
Taxes	$ 1,578,235	$ 1,602,940	$ 57,999	$ 3,239,174
Licenses and permits	1,737,659	-	-	1,737,659
Intergovernmental	4,381,409	-	770,585	5,151,994
Charges for services	106,408	-	6,900	113,308
Fines and forfeits	52,097	-	-	52,097
Miscellaneous revenues	198,308	-	280,896	479,204
Total revenues	8,054,116	1,602,940	1,116,380	10,773,436
Expenditures				
Current				
General government	1,187,892	-	-	1,187,892
Judicial	391,191	-	3,615	394,806
Public safety	3,513,050	-	662,607	4,175,657
Public works	710,077	-	-	710,077
Community development	275,628	-	-	275,628
Health	157,018	-	-	157,018
Culture and recreation	13,598	1,557,452	-	1,571,050
Community support	17,019	-	297,900	314,919
Capital outlay	-	-	256,959	256,959
Debt service	56,062	-	518,134	574,196
Total expenditures	6,321,535	1,557,452	1,739,215	9,618,202
Excess (deficiency) of revenues over (under) expenditures	1,732,581	45,488	(622,835)	1,155,234
Other Financing Sources (Uses)				
Transfers in	-	-	736,525	736,525
Transfers out	(695,940)	-	(40,585)	(736,525)
Total other financing sources and uses	(695,940)	-	695,940	-
Net change in fund balances	1,036,641	45,488	73,105	1,155,234
Fund balances, beginning of year	2,707,192	118,114	455,162	3,280,468
Fund balances, end of year	$ 3,743,833	$ 163,602	$ 528,267	$ 4,435,702

The accompanying notes are an integral part of the financial statements.

CITY OF WEST WENDOVER, NEVADA
Reconciliation of the Statement of Revenues,
Expenditures, and Changes in Fund Balances of Governmental Funds
To the Statement of Activities
For the Year Ended June 30, 2021

Amounts reported for governmental activities in the statement of activities are different because:		
Net change in fund balances - total governmental funds		$ 1,155,234
Governmental funds report capital outlays as expenditures. However, in the statement of activities, the costs of those assets is allocated over their estimated useful lives and reported as depreciation expense. This is the amount by which capital outlay exceeded depreciation in the current period.		
Capital outlay	$ 444,036	
Depreciation expense	(903,118)	(459,082)
Governmental funds report the gross proceeds from the sale of capital assets as revenue. However, in the statement of activities, the gain/(loss) on the sale of capital assets is reported net of its net book value.		(50,956)
Repayment of bond principal is an expenditure in the governmental funds, but the repayment reduces long-term liabilities in the statement of net position.		370,095
Accrued interest for long-term debt is not reported as an expenditure for the current period while it is recorded in the statement of activities. The adjustment reflects the change in interest payable		2,846
Pension contributions are reported as expenditures in the governmental funds when made. However, they are reported as deferred outflows of resources in the Statement of Net Position because the net pension liability is measured a year before the City's report date. Pension expense, which is the change in the net pension liability adjusted for changes in deferred outflows and inflows of resources related to pension, is reported in the Statement of Activities.		
Pension contributions	$ 500,979	
Pension expense	(453,644)	47,335
Compensated absences expenses reported in the statement of activities do not require the use of current financial resources and therefore are not reported as expenditures in the governmental funds. This adjustment reflects the change in compensated absences payable.		6,550
The internal service fund is used by management to charge the cost of insurance to the various funds. The net revenue (loss) of the internal service fund is reported with governmental activities.		41,714
Change in net position of governmental activities		$ 1,113,736

The accompanying notes are an integral part of the financial statements.

CITY OF WEST WENDOVER, NEVADA
Statement of Net Position
Proprietary Funds
June 30, 2021

	Water Fund	Sewer Fund	Garbage/ Compost Fund	Total Proprietary Funds	Health Insurance Internal Service Fund
Assets					
Current assets					
Cash and investments	$ 1,191,165	$ 158,721	$ 2,062,615	$ 3,412,501	$ 178,162
Accounts receivable, net	203,129	178,106	140,490	521,725	-
Inventory	42,392	4,754	-	47,146	-
Prepaid expenses	2,344	6,105	1,648	10,097	67,003
Total current assets	1,439,030	347,686	2,204,753	3,991,469	245,165
Noncurrent assets					
Restricted cash	581,858	109,887	95,000	786,745	-
Due from component unit	2,049,614	-	-	2,049,614	-
Capital assets:					
Land	111,000	-	-	111,000	-
Buildings	1,277,649	1,173,762	1,535,458	3,986,869	-
Improvements other than buildings	974,603	76,600	5,164,633	6,215,836	-
Machinery and equipment	915,820	1,339,017	2,402,111	4,656,948	-
Utility system	2,232,105	15,820,916	-	18,053,021	-
Less accumulated depreciation	(2,583,874)	(7,746,080)	(5,911,464)	(16,241,418)	-
Total noncurrent assets	5,558,775	10,774,102	3,285,738	19,618,615	-
Total assets	6,997,805	11,121,788	5,490,491	23,610,084	245,165
Deferred Outflows of Resources					
Deferred outflows related to pensions	70,961	91,445	83,338	245,744	-
Liabilities					
Current liabilities					
Accounts payable	2,781	25,760	3,587	32,128	69,729
Accrued interest payable	24,806	10,518	11,630	46,954	-
Compensated absences	8,117	10,865	9,287	28,269	-
Customer deposits	3,712	-	-	3,712	-
Current portion of noncurrent liabilities	186,187	125,123	199,993	511,303	-
Total current liabilities	225,603	172,266	224,497	622,366	69,729
Noncurrent liabilities:					
Capital leases payable	-	-	436,869	436,869	-
Net pension liability	410,048	528,410	481,568	1,420,026	-
Bonds payable	2,768,019	2,359,568	42,674	5,170,261	-
Total noncurrent liabilities	3,178,067	2,887,978	961,111	7,027,156	-
Total liabilities	3,403,670	3,060,244	1,185,608	7,649,522	69,729
Deferred Inflows of Resources					
Deferred inflows related to pensions	52,706	67,920	61,899	182,525	-
Net Position					
Net investment in capital assets	2,108,826	8,179,524	2,511,202	12,799,552	-
Restricted for debt service	581,858	109,887	-	691,745	-
Restricted for closure/postclosure	-	-	95,000	95,000	
Unrestricted	921,706	(204,342)	1,720,120	2,437,484	175,436
Total net position	$ 3,612,390	$ 8,085,069	$ 4,326,322	$ 16,023,781	$ 175,436

The accompanying notes are an integral part of the financial statements.

CITY OF WEST WENDOVER, NEVADA
Statement of Revenues, Expenses, and Changes in Net Position
Proprietary Funds
For the Year Ended June 30, 2021

	Water Fund	Sewer Fund	Garbage/ Compost Fund	Total Proprietary Funds	Health Insurance Internal Service Fund
Operating revenues					
Charges for services	$ 1,300,479	$ 1,115,614	$ 1,388,999	$ 3,805,092	$ 1,054,568
Operating expenses					
Water purchases	578,326	-	-	578,326	-
Salaries and wages	118,910	287,898	282,584	689,392	-
Employee benefits	220,864	174,699	158,556	554,119	1,012,855
Services and supplies	307,444	408,089	207,718	923,251	-
Capital outlay	788	-	-	788	-
Depreciation and amortization	140,220	546,726	382,278	1,069,224	-
Total operating expenses	1,366,552	1,417,412	1,031,136	3,815,100	1,012,855
Operating income (loss)	(66,073)	(301,798)	357,863	(10,008)	41,713
Nonoperating revenues (expenses)					
Interest income	38,280	223	1,580	40,083	-
Impact fees	1,496	-	-	1,496	-
Miscellaneous income	15,825	8,056	21,240	45,121	-
Contributions from component unit for debt payments	10,584	-	-	10,584	-
Interest expense	(58,375)	(70,162)	(22,867)	(151,404)	-
Total nonoperating revenues (expenses)	7,810	(61,883)	(47)	(54,120)	-
Change in net position	(58,263)	(363,681)	357,816	(64,128)	41,713
Total net position, beginning	3,670,653	8,448,750	3,968,506	16,087,909	133,723
Total net position, end of year	$ 3,612,390	$ 8,085,069	$ 4,326,322	$ 16,023,781	$ 175,436

The accompanying notes are an integral part of the financial statements.

CITY OF WEST WENDOVER, NEVADA
Statement of Cash Flows
Proprietary Funds
For the Year Ended June 30, 2021

	Water Fund	Sewer Fund	Garbage/ Compost Fund	Total Proprietary Funds	Health Insurance Internal Service Fund
Cash Flows From Operating Activities:					
Cash received from customers, service fees	$ 1,272,022	$ 1,084,859	$ 1,384,034	$ 3,740,915	$ 1,054,568
Cash paid to suppliers	(897,648)	(423,204)	(209,497)	(1,530,349)	(974,360)
Cash paid to employees	(335,083)	(447,726)	(430,873)	(1,213,682)	-
Net cash flows from operating activities	39,291	213,929	743,664	996,884	80,208
Cash Flows From Noncapital Financing Activities:					
Net interfund receipts/(payments)	-	-	-	-	(80,000)
Net component unit receipts/(payments)	119,117	-	-	119,117	-
Cash received from miscellaneous sources	15,825	8,058	21,240	45,123	-
Net cash flows from noncapital financing activities	134,942	8,058	21,240	164,240	(80,000)
Cash Flows From Capital and Related Financing Activities:					
Impact fees	1,496	-	-	1,496	-
Principal paid on capital debt	(193,947)	(120,498)	(194,508)	(508,953)	-
Interest paid on capital debt	(58,375)	(70,162)	(22,867)	(151,404)	-
Acquisition and construction of capital assets	(12,077)	(22,039)	-	(34,116)	-
Net cash flows from capital and related financing activities	(262,903)	(212,699)	(217,375)	(692,977)	-
Cash Flows From Investing Activities:					
Interest income	38,280	223	1,580	40,083	-
Net change in cash and cash equivalents	(50,390)	9,511	549,109	508,230	208
Cash and investments, including restricted cash, beginning of year as restated	1,823,413	259,097	1,608,506	3,691,016	177,954
Cash and Cash Equivalents, Including Restricted Cash , End of Year	$ 1,773,023	$ 268,608	$ 2,157,615	$ 4,199,246	$ 178,162
Reconciliation of operating income to net cash flows from operating activities:					
Operating income (loss)	$ (66,073)	$ (301,798)	$ 357,863	$ (10,008)	$ 41,713
Adjustments to reconcile net income (loss) to net cash from operating activities					
Depreciation/amortization	140,220	546,726	382,278	1,069,224	-
Pension expense	37,522	53,872	47,009	138,403	-
Employer pension contributions	(30,227)	(38,482)	(35,248)	(103,957)	-
Changes in operating assets and liabilities:					
(Increase) decrease in receivables	(27,293)	(30,755)	(4,965)	(63,013)	-
(Increase) decrease in inventory	(3,430)	(561)	-	(3,991)	-
(Increase) decrease in prepaid expenses	(368)	-	(410)	(778)	(1,358)
Increase (decrease) in accounts payable	(7,292)	(14,554)	(1,369)	(23,215)	39,853
Increase (decrease) in due from deposits	(1,164)	-	-	(1,164)	-
Increase (decrease) in compensated absences	(2,604)	(519)	(1,494)	(4,617)	-
Net cash flows from operating activities	$ 39,291	$ 213,929	$ 743,664	$ 996,884	$ 80,208

The accompanying notes are an integral part of the financial statements.

NOTE 1. Summary of Significant Accounting Policies

Description of government-wide financial statements

The government-wide financial statements (i.e., the statement of net position and the statement of activities) report information on all of the nonfiduciary activities of the primary government and its component units. All fiduciary activities are reported only in the fund financial statements. *Governmental activities*, which normally are supported by taxes, intergovernmental revenues, and other nonexchange transactions, are reported separately from *business-type activities*, which rely to a significant extent on fees and charges to external customers for support. Likewise, the *primary government* is reported separately from certain legally separate *component units* for which the primary government is financially accountable.

Reporting Entity

The City of West Wendover (government) is a municipal corporation governed by an elected mayor and five-member governing council (council). The accompanying financial statements present the government and its component units, entities for which the government is considered to be financially accountable. Blended component units are, in substance, part of the primary government's operations, even though they are legally separate entities. Thus, blended component units are appropriately presented as funds of the primary government. Each discretely presented component unit is reported in a separate column in the government-wide financial statements to emphasize that it is legally separate from the government.

Discretely presented component units - The Johnson Springs Water System Enterprise Fund (Johnson Springs) was formed by a settlement agreement between the City of West Wendover, Nevada and the City of Wendover, Utah to replace Administrative Authority upon its dissolution (dissolved on December 31, 2008). Johnson Springs has no board. The net assets of the Administrative Authority were transferred to Johnson Springs on January 1, 2009, including the debt of the Administrative Authority that is in the name of the City. It is a separate enterprise fund and is considered a component unit due to the City's responsibility to perform all management, maintenance and accounting duties for the fund.

Basis of presentation – government-wide financial statements

While separate government-wide and fund financial statements are presented, they are interrelated. The governmental activities column incorporates data from governmental funds and internal service funds, while business-type activities incorporate data from the government's enterprise funds. Separate financial statements are provided for governmental funds, proprietary funds, and fiduciary funds, even though the latter are excluded from the government-wide financial statements.

As discussed earlier, the city has one discretely presented component units, Johnson Springs, which is considered a major component unit and is shown in separate columns in the government-wide financial statements.

As a general rule, the effect of interfund activity has been eliminated from the government-wide financial statements.

NOTE 1. Summary of Significant Accounting Policies, Continued

Basis of presentation – fund financial statements

The fund financial statements provide information about the government's funds, including its fiduciary funds and blended component units if any. Separate statements for each fund category—governmental, proprietary, and fiduciary—are presented. The emphasis of fund financial statements is on major governmental and enterprise funds, each displayed in a separate column. All remaining governmental and enterprise funds are aggregated and reported as nonmajor funds. Major individual governmental and enterprise funds are reported as separate columns in the fund financial statements.

The government reports the following major governmental funds:

The **General Fund** is the government's primary operating fund. It accounts for all financial resources of the general government, except those accounted for in another fund.

The **Recreation Fund** is used to account for the City's share of room tax proceeds and the distribution of those funds to the recreation district.

The government reports the following major enterprise funds:

The **Water Fund** accounts for the provision of water services to the residents of the City. All activities necessary to provide such services are accounted for in this fund, including, but not limited to, administration, operation, maintenance, financing and related debt service and billing and collection.

The **Sewer Fund** accounts for the provision of sewer services to the residents of the City. All activities necessary to provide such services are accounted for in this fund, including, but not limited to, administration, operation, maintenance, financing and related debt service and billing and collection.

The **Garbage/Compost Fund** is used to account for the provision of sanitation services to residents of the City. All activities necessary to provide such services are accounted for in this fund, including, but not limited to, administration, operation, maintenance, financing and related debt service and billing and collection.

Additionally, the City reports the following fund types:

Health Insurance Internal Service Fund – Internal Service Funds are used to account for the financing of goods and services provided by one department or agency to other departments or agencies of the government and to other government units, on a cost reimbursement basis.

NOTE 1. Summary of Significant Accounting Policies, Continued

During the course of operations the government has activity between funds for various purposes. Any residual balances outstanding at year end are reported as due from/to other funds and advances to/from other funds. While these balances are reported in fund financial statements, certain eliminations are made in the preparation of the government-wide financial statements. Balances between the funds included in governmental activities (i.e., the governmental funds) are eliminated so that only the net amount is included as internal balances in the governmental activities column. Similarly, balances between the funds included in business-type activities (i.e., the enterprise funds) are eliminated so that only the net amount is included as internal balances in the business-type activities column.

Further, certain activity occurs during the year involving transfers of resources between funds. In fund financial statements these amounts are reported at gross amounts as transfers in/out. While reported in fund financial statements, certain eliminations are made in the preparation of the government-wide financial statements. Transfers between the funds included in governmental activities are eliminated so that only the net amount is included as transfers in the governmental activities column. Similarly, balances between the funds included in business-type activities are eliminated so that only the net amount is included as internal balances in the business-type activities column.

Measurement focus and basis of accounting

The accounting and financial reporting treatment is determined by the applicable measurement focus and basis of accounting. Measurement focus indicates the type of resources being measured such *as current financial resources* or *economic resources*. The basis of accounting indicates the timing of transactions or events for recognition in the financial statements.

The government-wide financial statements are reported using the *economic resources measurement* focus and the *accrual basis of accounting*. Revenues are recorded when earned and expenses are recorded when a liability is incurred, regardless of the timing of related cash flows. Property taxes are recognized as revenues in the year for which they are levied. Grants and similar items are recognized as revenue as soon as all eligibility requirements imposed by the provider have been met.

The governmental fund financial statements are reported using the *current financial resources measurement* focus and the *modified accrual basis of accounting*. Revenues are recognized as soon as they are both measurable and available. Revenues are considered to be available when they are collectible within the current period or soon enough thereafter to pay liabilities of the current period. For this purpose, the government considers revenues to be available if they are collected within 60 days of the end of the current fiscal period. Expenditures generally are recorded when a liability is incurred, as under accrual accounting. However, debt service expenditures, as well as expenditures related to compensated absences, and claims and judgments, are recorded only when payment is due. General capital asset acquisitions are reported as expenditures in governmental funds. Issuance of long-term debt and acquisitions under capital leases are reported as other financing sources.

NOTE 1. Summary of Significant Accounting Policies, Continued

Property taxes, franchise taxes, licenses, and interest associated with the current fiscal period are all considered to be susceptible to accrual and so have been recognized as revenues of the current fiscal period. Entitlements are recorded as revenues when all eligibility requirements are met, including any time requirements, and the amount is received during the period or within the availability period for this revenue source (within 60 days of yearend). Expenditure-driven grants are recognized as revenue when the qualifying expenditures have been incurred and all other eligibility requirements have been met, and the amount is received during the period or within the availability period for this revenue source (within 60 days of yearend). All other revenue items are considered to be measurable and available only when cash is received by the government.

The proprietary funds are reported using the *economic resources measurement* focus and the *accrual basis of accounting*.

Assets, liabilities, deferred outflows/inflows of resources, and net position/fund balance

Cash and cash equivalents

The government's cash and cash equivalents are considered to be cash on hand, demand deposits, and short-term investments with original maturities of three months or less from the date of acquisition.

Investments

Investments for the government are reported at fair value (generally based on quoted market prices). The City of West Wendover invests in the State of Nevada Local Government Investment Pool, which has regulatory oversight from the Board of Finance for the State of Nevada.

State statues authorize the City to invest in obligations of the U.S. Treasury; certain farm loan bonds; certain securities issued by Nevada local governments and other state and local governments; certain repurchase agreements; certain bankers acceptances; certain commercial paper; and certain negotiable certificates of deposits and money market mutual funds, as well as the State of Nevada Local Government Investment Pool.

Inventories and prepaid items

Inventories for the general and proprietary funds are valued at cost using the first-in/first-out (FIFO) method and consist of expendable office supplies, pipe, fittings and miscellaneous automobile parts. The cost of such inventories is recorded as expenditures/expenses when consumed rather than when purchased.

For all other funds, the City of West Wendover charges consumable supplies against appropriations at the time of purchase. Any inventories of such supplies at June 30 are not material to the individual funds and are not recognized in the financial statements.

NOTE 1. Summary of Significant Accounting Policies, Continued

Certain payments to vendors reflect costs applicable to future accounting periods and are recorded as prepaid items in both the government-wide and fund financial statements. The cost of prepaid items is recorded as expenditures/expenses when consumed rather than when purchased

Capital assets

Capital assets, which include property, plant, equipment, and infrastructure assets (e.g. roads, bridges, sidewalks, and similar items), are reported in the applicable governmental or business-type activities column in the government-wide financial statements. Capital assets are defined by the government as assets with an initial, individual cost of more than $5,000 and an estimated useful life in excess of two years.

The City has elected not to record infrastructure assets prior to July 1, 2003 as allowed by Governmental Accounting Statement number 34 for phase 3 governments.

As the government constructs or acquires additional capital assets each period, including infrastructure assets, they are capitalized and reported at historical cost. The reported value excludes normal maintenance and repairs which are essentially amounts spent in relation to capital assets that do not increase the capacity or efficiency of the item or increase its estimated useful life. Donated capital assets are recorded at their estimated acquisition value at the date of donation.

Interest incurred during the construction phase of capital assets of enterprise funds is included as part of the capitalized value of the assets constructed. The amount of interest capitalized depends on the specific circumstances.

Land and construction in progress are not depreciated. The other property, plant, equipment, and infrastructure of the primary government are depreciated using the straight line method over the following estimated useful lives:

Building	35 to 50 years
Improvements other than buildings	20 to 30 years
Machinery, equipment, and vehicles	3 to 10 years
Utility systems	10 to 50 years

Deferred outflows/inflows of resources

In addition to assets, the statement of financial position will sometimes report a separate section for deferred outflows of resources. This separate financial statement element, *deferred outflows of resources*, represents a consumption of net position that applies to a future period(s) and so will not be recognized as an outflow of resources (expense/ expenditure) until then. The City has one type of item that qualifies for reporting for reporting in this category which is pension related items reported on the government-wide financial statements. See footnote 17 for more information.

NOTE 1. Summary of Significant Accounting Policies, Continued

In addition to liabilities, the statement of financial position will sometimes report a separate section for deferred inflows of resources. This separate financial statement element, *deferred inflows of resources*, represents an acquisition of net position that applies to a future period(s) and so will not be recognized as an inflow of resources (revenue) until that time. The City has one type of item that qualifies for reporting in this category which is pension related items reported on the government-wide financial statements. See footnote 17 for more information. The governmental funds report unearned revenues from two sources: advance payments for business licenses and advance payments for gaming licenses. These amounts are deferred and recognized as an inflow of resources in the period that the amounts are earned.

Net position flow assumption

Sometimes the government will fund outlays for a particular purpose from both restricted (e.g., restricted bond or grant proceeds) and unrestricted resources. In order to calculate the amounts to report as restricted – net position and unrestricted – net position in the government-wide and proprietary fund financial statements, a flow assumption must be made about the order in which the resources are considered to be applied. It is the government's policy to consider restricted – net position to have been depleted before unrestricted – net position is applied.

Fund balance flow assumptions

Sometimes the government will fund outlays for a particular purpose from both restricted and unrestricted resources (the total of committed, assigned, and unassigned fund balance). In order to calculate the amounts to report as restricted, committed, assigned, and unassigned fund balance in the governmental fund financial statements a flow assumption must be made about the order in which the resources are considered to be applied. It is the government's policy to consider restricted fund balance to have been depleted before using any of the components of unrestricted fund balance. Further, when the components of unrestricted fund balance can be used for the same purpose, committed fund balance is depleted first, followed by assigned fund balance. Unassigned fund balance is applied last.

Fund balance policies

Fund balance of governmental funds is reported in various categories based on the nature of any limitations requiring the use of resources for specific purposes. The government itself can establish limitations on the use of resources through either a commitment (committed fund balance) or an assignment (assigned fund balance).

The committed fund balance classification includes amounts that can be used only for the specific purposes determined by a formal action of the government's highest level of decision-making authority. The governing council is the highest level of decision-making authority for the government that can, by adoption of an ordinance prior to the end of the fiscal year, commit fund balance. Once adopted, the limitation imposed by the ordinance remains in place until a similar action is taken (the adoption of another ordinance) to remove or revise the limitation.

NOTE 1. Summary of Significant Accounting Policies, Continued

Amounts in the assigned fund balance classification are intended to be used by the government for specific purposes but do not meet the criteria to be classified as committed. The city council (council) has by resolution authorized the Mayor, City Manager, and Chief Financial Officer to assign fund balance. The council may also assign fund balance as it does when appropriating fund balance to cover a gap between estimated revenue and appropriations in the subsequent year's appropriated budget. Unlike commitments, assignments generally only exist temporarily. In other words, an additional action does not normally have to be taken for the removal of an assignment. Conversely, as discussed above, an additional action is essential to either remove or revise a commitment.

Revenues and Expenditures/Expenses

Program revenues

Amounts reported as program revenues include 1) charges to customers or applicants who purchase, use, or directly benefit from goods, services, or privileges provided by a given function or segment and 2) grants and contributions (including special assessments) that are restricted to meeting the operational or capital requirements of a particular function or segment. All taxes, including those dedicated for specific purposes, and other internally dedicated resources are reported as general revenues rather than as program revenues.

Property taxes

All real property within the City of West Wendover is assigned a parcel number by the Elko County Assessor in accordance with state law, with each parcel being subject to physical reappraisal every five years. A factoring system is used to adjust the appraised value during the years between physical appraisals. The property and its improvements are assessed at 35% of "taxable value" as defined by statute. The amount of tax levied is developed by multiplying the assessed value by the tax rate applicable to the area in which the property is located. The maximum tax rate was established in the State Constitution at $5 per $100 of assessed valuation; however, as a result of legislative action, the tax rate was further limited to $3.64 per $100 as assessed valuation, except in cases of severe financial emergency as defined by NRS 354.705. Taxes on real property are a lien on the property and attach on July 1 of the year for which the taxes are levied.

Taxes may be paid in four installments, the first installment is due on the third Monday of August and the remaining three installments are payable on the first Monday in October, January and March to the Treasurer of Elko County in which the City of West Wendover is located. Penalties are assessed if a taxpayer fails to pay an installment within ten days of the installment due date. After a two year waiting period, if the taxes remain unpaid, a tax deed is issued conveying the property to the County with a lien for back taxes and accumulated charges. Redemption may be made by the owner or such persons as described by statute by paying all back taxes and accumulated penalties, interest and costs before sale.

Taxes on personal property are collected currently. Personal property declarations are mailed out annually by the County and the tax is computed using percentages of taxable values established by the Department of Taxation and the tax rates described above.

NOTE 1. Summary of Significant Accounting Policies, Continued

Compensated absences

Vacation and Sick-leave

The city's policy permits employees to accumulate earned but unused vacation benefits, which are eligible for payment upon separation from government service. The liability for such leave is reported as incurred in the government-wide and proprietary fund financial statements. A liability for those amounts is recorded in the governmental funds only if the liability has matured as a result of employee resignations or retirements.

Per City Policy and Collective Bargaining Agreements, employees earn (accrue) sick leave benefits which they are eligible to receive upon separation of service at a determined percentage based upon total years of service and based upon the required notice of separation.

Proprietary funds operating and non-operating revenues and expenses

Proprietary funds distinguish *operating* revenues and expenses from *non-operating* items. Operating revenues and expenses generally result from providing services and producing and delivering goods in connection with a proprietary fund's principal ongoing operations. The principal operating revenues of the water fund, sewer fund, and garbage/compost facility fund are charges to customers for sales and services. Operating expenses for enterprise funds include the cost of sales and services, administrative expenses, and depreciation on capital assets. All revenues and expenses not meeting this definition are reported as non-operating revenues and expenses.

Use of Estimates

The preparation of financial statements in conformity with accounting principles generally accepted in the United States of America requires management to make estimates and assumptions that affect the reported amounts of assets and liabilities and disclosure of contingent assets and liabilities at the date of the financial statements and the reported amounts of revenues and expenditures/expenses during the reporting period. Actual results could differ from those estimates.

Pensions

For purposes of measuring the net pension liability, deferred outflows of resources and deferred inflows of resources related to pensions, and pension expense, information about the pension plan's fiduciary net position of the Public Employees' Retirement System of Nevada (PERS) and additions to/deductions from the plan's fiduciary net position have been determined on the same basis as they are reported by PERS. For this purpose, benefit payments (including refunds of employee contributions) are recognized when due and payable in accordance with the benefit terms. Investments are reported at fair value.

NOTE 1. Summary of Significant Accounting Policies, Continued

Comparative Data

Comparative data shown for the prior year has been extracted from the 2019-2020 financial statements and reclassified where necessary. It has been provided to add comparability but is not considered full disclosure of transactions for 2019-2020. Such information can only be obtained by referring to the audited financial statements for that year.

NOTE 2. Reconciliation of Government-Wide and Fund Financial Statements

The governmental fund balance sheet includes reconciliation between total governmental fund balances and net position of governmental activities as reported in the government-wide statement of net position. This difference primarily results from the long-term economic focus of the statement of net position versus the current financial resources focus of the governmental fund balance sheets. The details of these differences are reported in the reconciliation on as listed in the table of contents.

The governmental fund statement of revenues, expenditures, and changes in fund balance includes a reconciliation between net changes in fund balances-total governmental funds and changes in net position of governmental activities as reported in the government-wide statement of activities. These differences are the result of converting from the current resources measurement focus and modified accrual basis for governmental fund statements to the economic resources measurement focus and full accrual basis used for government-wide statements. The details of these differences are reported in the reconciliation as listed in the table of contents.

NOTE 3. Stewardship, Compliance, and Accountability

Budgets and Budgetary Accounting

The City adheres to the Local Government Budget Act incorporated in Section 354 of the Nevada Revised Statutes. The provision of the Act included the following major procedures to establish the budgetary data which is reflected in these financial statements.

a. On or before April 15, the City Council files a tentative budget with the Nevada Department of Taxation for all funds.

b. Public budget hearings on the tentative budget are held on the third Tuesday of May.

c. On or before June 1, at a public hearing, the City Council indicates changes, if any, to be made to the tentative budget must then be forwarded to the Nevada Department of Taxation for the final review and approval.

d. Formal budgetary integration in the financial records of all funds is employed to enhance management control during the year.

e. Budgets for all funds are adopted on a basis consistent with generally accepted accounting principles (GAAP). All appropriations lapse at year end.

f. Budget amounts within funds, and between funds, may be transferred if amounts do not exceed the original budget. Such transfers must be approved by the budget officer and/or City Council, depending on established criteria. Budget augmentations in excess of original budgetary amounts may only be made with prior approval of the City Council, following a scheduled and noticed public hearing for those funds which have ad valorem taxes allocated as a source of revenue. For all other funds, the City Council must approve the budget augmentation with a majority vote and adopt a resolution providing therefore.

g. The above dates may be adjusted as necessary during legislative years.

h. The budget amounts reflected in the financial statements have been amended from the original amounts in accordance with the approved procedures.

i. In accordance with state statute, actual expenditures may not exceed budgeted appropriations of the various governmental functions (excluding the debt services functions) in the General Fund and total expenditures in other governmental funds. Per NRS 354.626, expenditures over budgeted appropriations are allowed for bond repayments, medium term obligation repayments and long-term contracts expressly authorized by law.

NOTE 4. Cash and Investments

A reconciliation of cash deposits and investments to the government-wide statement of net position as follows:

	Primary Government	Component Unit
Deposits:		
Cash on hand	$ 1,575	$ -
Cash in bank	7,056,453	(1,109,548)
Investments:		
Nevada local government investment pool	1,516,565	1,392,031
Total deposits and investments	$ 8,574,593	$ 282,483
Cash and cash equivalents	$ 7,473,908	$ 282,483
Restricted cash	1,100,685	-
	$ 8,574,593	$ 282,483

Deposits

Custodial Credit Risk

For deposits this is the risk that in the event of a bank failure, the government's deposit may not be returned. The City does not have a formal policy for custodial credit risk. As of June 30, 2021, $0 of the primary government and component unit's combined bank balance of $6,021,139 was exposed to custodial credit risk because it was either fully insured by FDIC insurance or collateralized by a pledging financial institution.

Investments

The Nevada State Treasurer's Office operates the Local Government Investment Pool (LGIP). The LGIP is an external investment pool operated by the Nevada Public Treasurer.

The LGIP is not registered with the SEC as an investment company. Deposits in the LGIP are not insured or otherwise guaranteed by the State of Nevada, and participants share proportionally in any realized gain or losses on investments.

The provisions of State Law (NRS 355.170) govern the investment of public funds as noted in Footnote 1.

NOTE 4. Cash and Investments, Continued

As of June 30, 2021 the government had the following investments:

Investment Type	Primary Government Fair Value	Component Unit Fair Value	Rating (1)	Weighted Average Maturity (2)
Nevada Local Government Pooled Investment Fund	$ 1,516,565	$ 1,392,031	N/A	143
Total Fair Value	$ 1,516,565	$ 1,392,031		

(1) Ratings are provided where applicable to indicate associated Credit Risk. N/A indicates not applicable.

(2) Interest Rate Risk is estimated using the weighted average days to maturity.

The City categorizes its fair value measurements within the fair value hierarchy established by generally accepted accounting principles. The hierarchy is based on the valuation inputs used to measure the fair value of the asset. Level 1 inputs are quoted prices in active markets for identical assets; Level 2 inputs are significant other observable inputs; Level 3 inputs are significant unobservable inputs.

The City has the following recurring fair value measurements as of June 30, 2021:

- Nevada Local Government's Investment Pool (LGIP):

	Primary Government	Component Unit
Level 1 inputs	$ 495,613	$ 454,916
Level 2 inputs	1,020,952	937,115
Total LGIP investment	$ 1,516,565	$ 1,392,031

Interest Rate Risk

Interest rate risk is the risk that changes in interest rates will adversely affect the fair value of an investment. The City's policy for managing its exposure to fair value loss arising from increasing interest rates is to comply with the provisions of State law (NRS 355.170).

Credit Risk

Credit risk is the risk that an issuer or other counterparty to an investment will not fulfill its obligations. The primary government and component unit's policy for reducing its exposure to credit risk is to limit its investments to the Nevada Local Government Investment Pool and to comply with State Law (NRS 355.170). The Nevada Local Government Investment Pool is unrated.

Concentration of Credit Risk

The Primary Government and the Component Unit place no limit on the amount the Primary Government or the Component Unit may invest in any one issue.

NOTE 4. Cash and Investments, Continued

Cash Restricted for Special Uses

The primary government and the component unit maintain restricted cash to comply with various legal and contractual requirements. Amounts restricted are as follows at June 30, 2021:

Restricted cash footnote

Medium Term Sales Tax Revenue Bond Reserves	$	313,500
Closure / post closure trust funds		95,000
Waste Water Treatment Plant Revenue Bond Reserves		109,888
Water Revenue Bonds, Series 2015 Bond Reserves		18,144
Water Rev Bonds Series 2015 - Asset Replacement		143,170
AB198 Capital Replacement Projects Fund		420,543
Unutilized Regional Transportation Commission Funds		440
Total restricted cash - primary government	$	1,100,685

NOTE 5. Receivables / Due from other Governments

Receivables in the governmental funds consist principally of room and franchise taxes due various businesses. Amounts due from other governments consist primarily of taxes due from the State of Nevada and grant revenues due from various granting agencies. All receivables and amounts due from other governments are considered by management to be fully collectible and therefore, no allowance for doubtful accounts is necessary.

Receivables in the proprietary funds represent service billings to customers and are shown net of an allowance for doubtful accounts. The allowance for doubtful accounts is estimated based on professional judgement and historical information. The allowances for doubtful accounts at June 30, 2021 were as follows:

Water Fund	$	-
Sewer Fund		-
Garbage/Compost Fund		-
Johnson Springs		-
	$	-

NOTE 6. Capital Assets

Governmental capital asset activity for the year ended June 30, 2021 was as follows:

Governmental Activities:	Balance 6/30/20	Additions	Deletions	Balance 6/30/21
Capital assets, not being depreciated:				
Land	$ 1,467,431	$ -	$ (50,956)	$ 1,416,475
Construction in progress	187,320	169,726	-	357,046
Total capital assets, not being depreciated	1,654,751	169,726	(50,956)	1,773,521
Capital assets, being depreciated:				
Buildings	11,159,570	55,539	-	11,215,109
Other improvements	14,315,356	-	-	14,315,356
Machinery and equipment	2,993,599	218,770	(6,765)	3,205,604
Total capital assets, being depreciated	28,468,525	274,309	(6,765)	28,736,069
Less accumulated depreciation for:				
Buildings	(3,523,134)	(275,802)	-	(3,798,936)
Other improvements	(4,412,951)	(526,915)	-	(4,939,866)
Machinery and equipment	(2,763,506)	(100,401)	6,765	(2,857,142)
Total accumulated depreciation	(10,699,591)	(903,118)	6,765	(11,595,944)
Total capital assets, being depreciated, net	17,768,934	(628,809)	-	17,140,125
Governmental activities capital assets, net	$ 19,423,685	$ (459,083)	$ (50,956)	$ 18,913,646

Depreciation expense was charged to the functions/programs of the City as follows:

Governmental Activities:	
General government	$ 557,286
Judicial	2,837
Public safety	63,446
Public works	2,023
Health and sanitation	23,053
Culture and recreation	95,606
Community support	1,194
Streets and highways	157,673
Total depreciation expense - governmental activities	$ 903,118

NOTE 6. Capital Assets, Continued

Business-type capital asset activity for the year ended June 30, 2021 was as follows:

Business-Type Activities:	Balance 6/30/20	Additions	Deletions	Balance 6/30/21
Capital assets not being depreciated:				
Land	$ 111,000	$ -	$ -	$ 111,000
Total capital assets, not being depreciated	111,000	-	-	111,000
Capital assets being depreciated:				
Buildings	3,979,994	6,875	-	3,986,869
Other improvements	6,215,836	-	-	6,215,836
Machinery and equipment	4,636,466	20,482	-	4,656,948
Utility systems	18,046,261	6,760	-	18,053,021
Total capital assets, being depreciated	32,878,557	34,117	-	32,912,674
Less accumulated depreciation for:				
Buildings	(639,145)	(99,515)	-	(738,660)
Other improvements	(3,856,563)	(221,741)	-	(4,078,304)
Machinery and equipment	(3,575,602)	(209,474)	-	(3,785,076)
Utility systems	(7,100,885)	(538,493)	-	(7,639,378)
Total accumulated depreciation	(15,172,195)	(1,069,223)	-	(16,241,418)
Total capital assets, being depreciated, net	17,706,362	(1,035,106)	-	16,671,256
Business-type activities capital asset, net	$ 17,817,362	$ (1,035,106)	$ -	$ 16,782,256

Depreciation expense was charged to the functions/programs of the City as follows:

Business-Type Activities:	
Water Fund	$ 140,220
Sewer Fund	546,725
Combined Garbage / Compost Facility Fund	382,278
Total depreciation expense - business-type activities	$ 1,069,223

NOTE 6. Capital Assets, Continued

Component unit capital asset activity for the year ended June 30, 2021 was as follows:

Component Unit - Johnson Springs	Balance 06/30/20	Additions	Deletions	Balance 06/30/21
Capital assets not being depreciated:				
Land	$ 18,000	$ -	$ -	$ 18,000
Total capital assets, not being depreciated	18,000	-	-	18,000
Capital assets being depreciated:				
Buildings	6,836,936	-	-	6,836,936
Other improvements	411,632	-	-	411,632
Machinery and equipment	571,254	-	-	571,254
Utility system	5,316,197	-	-	5,316,197
Total capital assets, being depreciated	13,136,019	-	-	13,136,019
Less accumulated depreciation for:				
Buildings	(4,609,455)	(217,403)	-	(4,826,858)
Other improvements	(178,748)	(19,413)	-	(198,161)
Machinery and equipment	(411,665)	(21,975)	-	(433,640)
Water utility system	(2,022,689)	(133,213)	-	(2,155,902)
Total accumulated depreciation	(7,222,557)	(392,004)	-	(7,614,561)
Total capital assets, being depreciated, net	5,913,462	(392,004)	-	5,521,458
Johnson Springs component unit fund activities capital assets, net	$ 5,931,462	$ (392,004)	$ -	$ 5,539,458

NOTE 7. Long-Term Liabilities

The following is a summary of long-term liabilities for the year ended June 30, 2021:

Long-Term Debt	Date of Issue	Interest Rate	Orriginal Amount of Issue	June 30, 2020	Additions	Retirements	June 30, 2021	Current Portion
Governmental Activities								
Direct Placement Bonds Payable:								
Medium Term Sales Tax Revenue Bond, Seriers 2009 (City Hall)	8/18/2009	4.38%	5,225,000	$ 4,051,544	$ -	$ (137,095)	$ 3,914,449	$ 145,119
General Obligation Medium-Term Bonds, Series 2015	7/14/2015	2.26%	2,200,000	1,342,000	-	(233,000)	1,109,000	241,000
Total direct placement bonds payable				5,393,544	-	(370,095)	5,023,449	386,119
Total Bonds Payable				5,393,544	-	(370,095)	5,023,449	386,119
Other Liabilities								
Compensated absences				316,480	200,132	(206,682)	309,930	155,000
Net pension liability				6,277,291	788,363	(500,979)	6,564,675	-
Total governmental long-term liabilities				$ 11,987,315	$ 988,495	$ (1,077,756)	$ 11,898,054	$ 541,119

For governmental activities, compensated absences and net position liabilities are generally liquidated through the General Fund.

NOTE 7. Long-Term Liabilities, continued

Long-Term Debt	Date of Issue	Interest Rate	Orriginal Amount of Issue	June 30, 2020	Additions	Retirements	June 30, 2021	Current Portion
Business-Type Activities								
Public Offerings Bonds:								
Waste Water Treatment Plant Revenue Bond	6/1/2012	2.75%	2,637,000	2,288,521	-	(46,497)	2,242,024	47,789
Total business-type public offering bonds payable				2,288,521	-	(46,497)	2,242,024	47,789
Direct Placement Bonds Payable:								
General Obligation Limited Tax Water Bonds, Series 2019	8/15/2019	2.16%	2,173,729	2,135,729		(108,533)	2,027,196	96,457
General Obligation Limited Tax Medium-Term, Series 2014	6/17/2017	2.43%	2,100,000	950,000	-	(222,000)	728,000	232,000
Water Revenue Bonds, Series 2015	10/8/2015	2.63%	747,000	695,755	-	(11,412)	684,343	12,397
Total business-type direct placement bonds payable				3,781,484	-	(341,945)	3,439,539	340,854
Total business-type long-term debt				6,070,005	-	(388,442)	5,681,563	388,643
Capital leases payable:								
2019 Hook Lift - Compost/Garbage Lease	9/19/2019	2.36%	464,990	420,416		(89,628)	330,788	91,756
2018 Caterpillar Wheel Loader Compost Lease	1/18/2018	4.20%	231,738	136,963	-	(30,882)	106,081	30,904
Total Capital Lease Payable				557,379	-	(120,510)	436,869	122,660
Other Liabilities								
Net pension liability				1,313,476	214,919	(108,369)	1,420,026	-
Compensated absences				32,886	16,860	(21,477)	28,269	28,269
Total business-type long-term liabilities				$ 7,973,746	$ 231,779	$ (638,798)	$ 7,566,727	$ 539,572
Component Unit								
Johnson Springs								
Other Liabilities								
Net pension liability				129,051	1,516	(9,258)	121,309	-
Compensated absences				5,718	7,864	(3,734)	9,848	9,848
Total Component Unit long-term liabilities				$ 134,769	$ 9,380	$ (12,992)	$ 131,157	$ 9,848

NOTE 7. Long-Term Liabilities, Continued

Revenue Bonds

The City has pledged future net revenues from the City's Municipal Water System to repay $2,173,729 and $747,000 in water revenue bonds issued in November 1998 and 2019, respectively, with interest rates of 2.16% and 2.63%, respectively. Proceeds from the bonds provided financing to pay for the cost to acquire, improve, construct, equip, operate, and maintain a water project for the City. The bonds are payable solely from net revenues from the Municipal Water System and are payable through 2039 and 2056.

The City has pledged future net revenues from the City's Sewer Facility to repay $2,637,000 in sewer revenue bonds issued in June 2012 with an interest rate of 2.75%. Proceeds from the bonds provided financing for the construction of a new sewer facility. The bonds are payable solely from future net revenues from the Sewer Facility and are payable through 2052.

The following schedules reflect debt service requirements to maturity of the City's debt as of June 30, 2021:

	Governmental Activities		Business-Type Activities			
Year Ending	Direct Placement Bonds		Public Offering Bonds		Direct Placement Bonds	
June 30,	Principle	Interest	Principle	Interest	Principle	Interest
2022	$ 386,119	$ 190,721	$ 47,789	$ 61,175	$ 340,854	$ 78,802
2023	401,597	178,695	49,117	59,847	354,277	70,742
2024	356,938	167,280	50,323	58,641	366,708	62,406
2025	371,414	155,228	51,880	57,084	116,287	53,680
2026	385,798	143,109	53,321	55,643	118,876	51,091
2027-2031	986,329	581,080	289,517	255,304	635,253	214,581
2032-2036	1,206,133	335,242	331,946	212,874	709,225	140,609
2037-2041	929,121	64,720	380,856	163,964	434,992	65,525
2042-2046	-	-	436,813	109,230	110,236	40,964
2047-2051	-	-	500,993	43,827	125,651	25,549
2052-2056	-	-	49,469	499	127,180	8,039
2057-2061	-	-	-	-	-	-
Total Principal	$ 5,023,449	$ 1,816,075	$ 2,242,024	$ 1,078,088	$ 3,439,539	$ 811,988

The City's outstanding bonds from direct placements of $8,462,988 are secured with pledged revenues. The outstanding issues from direct placement contain provisions that in an event of default, the bonds become taxable and the interest rate on the bonds increases.

The City has no unused lines of credit at June 30, 2021.

NOTE 8. Capital Leases Payable

The government has entered into two lease agreements, which are considered capital leases in accordance with Financial Accounting Standard Board ASC 840-30-25. The two leases are shown in the combined garbage/compost fund. The total amount of equipment capitalized under the leases is $696,378 for the business-type activities. Amortization on capital leases is included in depreciation expense.

The following is an annual schedule of future minimum lease payments with interest rates ranging from 2.36% to 4.2% under the capital leases, together with the present value of the net minimum lease payments:

Year Ending June 30	Business-type Activities
2022	$ 140,135
2023	198,550
2024	99,024
2025	22,512
2026	-
Total remaining minimum lease payments	460,221
Less amount representing interest	(23,352)
Present value of net remaining minimum lease payments	$ 436,869

NOTE 9. Segment Information

In previous years, the component unit, Johnson Springs, issued separate revenue bonds to finance its operations. Segment information for Johnson Springs is disclosed below and also in the supplementary information. Segment information for the other proprietary funds is disclosed in the basic financial statements.

	06/30/21
Operating revenues	$ 721,512
Depreciation and amortization	(392,004)
Operating expenses	(421,719)
Operating income/(loss)	(92,211)
Nonoperating revenues and (expenses)	(30,003)
Change in net position	(122,214)
Beginning net position	3,800,854
Ending net position	3,678,640
Net working capital	(1,744,910)
Total assets	5,913,950
Total deferred outflows	20,993
Current liabilities	69,787
Due to primary government	2,049,614
Bonds and other long term debt obligations	121,309
Total deferred inflows	15,593
Net Position	
Net investment in capital assets	3,489,845
Unrestricted	188,795
Total Net Position	$ 3,678,640
Condensed Statement of Cash Flows	
Net cash flows from:	
Operating activities	$ 311,806
Noncapital financing activities	(107,117)
Capital and related financing activities	(36,607)
Investing activities	5,188
Net Increase (decrease)	$ 173,270
Beginning cash and cash equivalents	109,213
Ending cash and cash equivalents	$ 282,483

NOTE 10. Interfund Receivables, Payables, and Transfers

As of June 30, 2021 interfund receivables and payables that resulted from various interfund transactions for the primary government were as follows:

	Due from Other Funds	Due to Other Funds
General Fund	$ 34,440	$ -
Nonmajor funds:		
Grant Fund	-	34,440
Total	$ 34,440	$ 34,440

As of June 30, 2021, interfund receivables and payables that resulted from transactions between the primary government and the component unit were as follows:

	Due from Component Unit	Due to Primary Government
Water Fund:		
Interest receivable	$ 22,418	$ -
Debt repayment receivable	2,027,196	-
Component Unit		
Interest payable	-	22,418
Debt repayment payable	-	2,027,196
Total	$ 2,049,614	$ 2,049,614

In 1998, the City of West Wendover issued long term debt obligations to complete a water project in behalf of its constituents. The component unit, which benefited from the project, is assisting with the repayment of the revenues bonds issued in the water fund. Hence, there is an interfund balance between the water fund and the component unit, Johnson Springs as shown above.

Interfund transfers for the fiscal year ended June 30, 2021 are as follows:

	Transfers out:		
Transfer in:	General	Non-major Ad Valorem Capital Projects	Total Transfers in
Nonmajor Governmental Funds			
Welcome Center Fund	$ 171,120	$ -	$ 171,120
Wendover Will Landmark Fund	22,100	-	22,100
Capital Projects Fund	502,720	40,585	543,305
Total transfers out	$ 695,940	$ 40,585	$ 736,525

NOTE 10. Interfund Receivables, Payables, and Transfers, Continued

Transfers are used to (1) move revenues from the fund that statute or budget requires to collect them to the fund that statute or budget requires to expend them and (2) use unrestricted revenues collected in the general fund to finance various programs accounted for in other funds in accordance with budgetary authorizations.

NOTE 11. Deferred Compensation Plan

The City offers its employees a deferred compensation plan created in accordance with Internal Revenue Code Section 457. The plan, available to all full-time employees at their option, permits participants until termination, retirement, death, or unforeseeable emergency.

Plan assets are held and administered by The Hartford. The plan does not meet the definition of a fiduciary fund as defined in GASB 32, and therefore, is not reported in this financial statement.

NOTE 12. Room Taxes

On October 16, 2001, Ordinance 01-20 was passed, increasing room taxes from 10% to 16%. Of this rate, 14% is allocated to the West Wendover Recreation District. Additionally, the Ordinance allows for 1% to be paid to a non-profit entity to promote tourism and recreation throughout the City of West Wendover. At June 30, 2021 this amount was held as restricted in the Recreation Fund.

NOTE 13. Commitments and Contingent Liabilities

Amounts received or receivable from grantor agencies are subject to audit and adjustment by grantor agencies, principally the federal government. Any disallowed claims, including amounts already collected may constitute a liability of the applicable funds. The amount, if any, of expenditures which may be disallowed by the grantor cannot be determined at this time although the City expects such amounts, if any, to be immaterial.

The City is party to legal proceedings which normally occur in governmental operations. City officials believe these legal proceedings are not likely to have a material adverse impact on the financial position of the City.

NOTE 14. Available Borrowing Capacity

The lawful general obligation debt limit for city governments is established by State statute not to exceed thirty percent of the total last assessed valuation of the taxable property of the City. At June 30, 2021, the general obligation debt limit and available borrowing capacity of the City of West Wendover was $44,197,808.

NOTE 15. Closure and Post-Closure Care Cost

State and Federal laws and regulations require that the City place a final cover on its landfill sites and perform certain maintenance and monitoring functions at the landfill sites for a minimum of thirty years after closure. In addition to operating expenses related to current activities of the landfill sites, an expense provision and related liability should be recognized based on the future closure and post-closure care costs that will be incurred near or after the date the landfills no longer accepts waste. GASB Statement 18 requires the recognition of these landfill closure and post-closure care costs based on the amount of the landfill used during the year. The City does not report a liability for the estimated closure and post-closure care costs because it has passed a resolution that authorizes participation in the landfill assurance program established through the Nevada Public Agency Insurance Pool as a mechanism to demonstrate financial responsibility for the closure and post-closure care costs. Because the City has, in effect, transferred its responsibility for closure and post-closure care costs to another entity through the purchase of the insurance policy, the liabilities are not reported on the City's financial statements as per GASB 18.

The estimated liability for landfill closure and post-closure care costs under GASB Statement 18 requirements is $623,255 as of June 30, 2021. The City had two cells in operation during fiscal year 2021. The Class I cell has used 100% of available capacity and a new Class I cell was constructed in fiscal year 2016 according to the 2014 Volumetric Survey. The City constructed new cells for operation since 2016, which includes Class III cell, Cell C, Cell B (once fully excavated), and Cell E to be sufficient for an additional 149 months of operation. The estimated closure and post-closure costs are based on the amount that would be paid if all equipment, facilities, and services required to close, monitor, and maintain landfill modules currently in use for all cells in operation during 2021. The City maintained an insurance policy with a face amount of $529,422 at June 30, 2021. Additional financial assurance for closure and post-closure costs is accomplished by the City restricting $95,000 in cash in the garbage and compost fund. See the statement of net position and restricted cash footnote.

NOTE 16. Risk Management

The City is exposed to various risks of loss related to torts; theft of, damage to, and destruction of assets, errors and omissions; injuries to employees; and natural disasters. These risks are covered by commercial insurance purchased from independent third parties. Settled claims from these risks have not exceeded commercial insurance coverage for the past three years.

The City has chosen to establish a risk financing fund for risks associated with the employee's health insurance plan. The risk financing fund is accounted for as an internal service fund where assets are set aside for claim settlement. A premium is charged to each function which accounts for full-time employees.

Liabilities of funds are reported when it is probable that a loss has occurred and the amount of the loss can be reasonably estimated. There were no liabilities that met these criteria at June 30, 2021. Liabilities include an amount for claims that have been incurred but not reported (IBNR). Claim liabilities are calculated considering the effects of inflation, recent claim settlement trends including frequency and amount of pay-outs and other economic and social factors.

Changes in the balances of claims liabilities during the past three fiscal years are as follows:

Fiscal Year Ended June 30	Unpaid Claims Beginning of Fiscal Year	Incurred Claims	Claim Payments	Unpaid Claims End of Fiscal Year
2021	$ -	$ 671,729	$ 671,729	$ -
2020	$ -	$ 418,723	$ 418,723	$ -
2019	$ -	$ 626,197	$ 626,197	$ -

NOTE 17. Retirement and Pension Plans

Public Employees' Retirement System of Nevada (PERS)

Plan description

PERS administers a cost-sharing, multiple-employer, defined benefit public employees' retirement system which includes both Regular and Police/Fire members. The System was established by the Nevada Legislature in 1947, effective July 1, 1948. The System is administered to provide a reasonable base income to qualified employees who have been employed by a public employer and whose earnings capacities have been removed or substantially impaired by age or disability. The report is available on the website at https://www.nvpers.org/.

NOTE 17. Retirement and Pension Plans, Continued

Benefits provided

Benefits, as required by the Nevada Revised Statutes (NRS or statute), are determined by the number of years of accredited service at time of retirement and the member's highest average compensation in any 36 consecutive months with special provisions for members entering the System on or after January 1, 2010. Benefit payments to which participants or their beneficiaries may be entitled under the plan include pension benefits, disability benefits, and survivor benefits.

Monthly benefit allowances for members are computed as 2.5% of average compensation for each accredited year of service prior to July 1, 2001. For service earned on and after July 1, 2001, this multiplier is 2.67% of average compensation. For members entering the System on or after January 1, 2010, there is a 2.5% service time factor and for regular members entering the System on or after July 1, 2015, there is a 2.25% factor. The System offers several alternatives to the unmodified service retirement allowance which, in general, allow the retired employee to accept a reduced service retirement allowance payable monthly during his or her lifetime and various optional monthly payments to a named beneficiary after his or her death.

Post-retirement increases are provided by authority of NRS 286.575 - .579.

Vesting

Regular members entering the System prior to January 1, 2010, are eligible for retirement at age 65 with five years of service, at age 60 with 10 years of service, or at any age with thirty years of service. Regular members entering the System on or after January 1, 2010, are eligible for retirement at age 65 with five years of service, or age 62 with 10 years of service, or any age with thirty years of service. Regular members who entered the System on or after July 1, 2015, are eligible for retirement at age 65 with 5 years of service, or at age 62 with 10 years of service or at age 55 with 30 years of service or any age with 33 1/3 years of service.

Police/Fire members entering the System prior to January 1, 2010, are eligible for retirement at age 65 with five years of service, at age 55 with ten years of service, at age 50 with twenty years of service, or at any age with twenty-five years of service. Police/Fire members entering the System on or after January 1, 2010, are eligible for retirement at 65 with five years of service, or age 60 with ten years of service, or age 50 with twenty years of service, or at any age with thirty years of service. Only service performed in a position as a police officer or firefighter may be counted towards eligibility for retirement as Police/Fire accredited service.

The normal ceiling limitation on monthly benefits allowances is 75% of average compensation. However, a member who has an effective date of membership before July 1, 1985, is entitled to a benefit of up to 90% of average compensation. Both Regular and Police/Fire members become fully vested as to benefits upon completion of five years of service.

NOTE 17. Retirement and Pension Plans, Continued

Contributions

The authority for establishing and amending the obligation to make contributions and member contribution rates is set by statute. New hires, in agencies which did not elect the Employer-Pay Contribution (EPC) plan prior to July 1, 1983, have the option of selecting one of two contribution plans. In one plan, contributions are shared equally by employer and employee. In the other plan, employees can take a reduced salary and have contributions made by the employer (EPC).

The System's basic funding policy provides for periodic contributions at a level pattern of cost as a percentage of salary throughout an employee's working lifetime in order to accumulate sufficient assets to pay benefits when due.

The System receives an actuarial valuation on an annual basis indicating the contribution rates required to fund the System on an actuarial reserve basis. Contributions actually made are in accordance with the required rates established by the Nevada Legislature. These statutory rates are increased/decreased pursuant to NRS 286.421 and 286.450.

The actuary funding method used is the Entry Age Normal Cost Method. It is intended to meet the funding objective and results in a relatively level long-term contributions requirement as a percentage of salary.

For fiscal years ended June 30, 2020, and 2021, the Statutory Employer/employee matching rate was 15.25% and 15.25% for Regular and 22.00% and 22.00% for Police/Fire.

For the fiscal year ended June 30, 2020, and 2021, the Employer-Pay Contribution (EPC) rate was 29.25% and 29.25% for Regular and 42.50% and 42.50% for Police/Fire.

The City's contributions for the current and two preceding fiscal years, all of which were equal to the required contributions, were as follows:

Year Ended June 30,	Regular Fund	Police/Fire Fund
2019	222,775	322,229
2020	247,247	359,249
2021	252,184	366,421

NOTE 17. Retirement and Pension Plans, Continued

Investment policy

The System's policies which determine the investment portfolio target asset allocation are established by the Board. The asset allocation is reviewed annually and is designed to meet the future risk and return needs of the System. The following was the Board adopted policy target asset allocation as of June 30, 2020:

Asset Class	Target Allocation	Long-term Geometric Expected Real Rate of Return*
U.S. stocks	42%	5.50%
International stocks	18%	5.50%
U.S. bonds	28%	0.75%
Private markets	12%	6.65%

*As of June 30, 2020, PERS' long-term inflation assumption was 2.75%.

Pension liability

Net pension liability

At June 30, 2021, the City reported a liability of $8,106,010 for its proportionate share of the PERS' net pension liability. The net pension liability was measured as of June 30, 2020, and the total pension liability used to calculate the net pension liability was determined by an actuarial valuation as of that date. The employer allocation percentage of the net pension liability was based on the total contributions due on wages paid during the measurement period. Each employer's proportion of the net pension liability is based on their combined employer and member contributions relative to the total combined employer and member contributions for all employers for the period ended June 30, 2020. The City's proportion measured as of June 30, 2020, was 0.05820 percent, which was a increase of 0.00159 percent from its proportion measured as of June 30, 2019.

Pension liability discount rate sensitivity

The following presents the net pension liability of the PERS as of June 30, 2021, calculated using the discount rate of 7.50%, as well as what the PERS net pension liability would be if it were calculated using a discount rate that is 1-percentage-point lower (6.50%) or 1-percentage-point higher (8.50%) than the current discount rate:

	1% Decrease (6.50%)	Discount Rate (7.50%)	1% Increase (8.50%)
Proportionate share of Net pension (asset) / liability	$ 12,642,244	$ 8,106,010	$ 4,334,469

NOTE 17. Retirement and Pension Plans, Continued

Pension plan fiduciary net position

Detailed information about the pension plan's fiduciary net position is available in the PERS Comprehensive Annual Financial Report, available on the PERS website www.nvpers.org.

Actuarial assumptions

The City's net pension liability was measured as of June 30, 2020, and the total pension liability used to calculate the net pension liability was determined by an actuarial valuation as of that date. The total pension liability was determined using the following actuarial assumptions, applied to all periods included in the measurement:

Inflation rate	2.75%
Investment rate of return	7.50%
Productivity pay increase	0.50%
Projected salary increases	Regular: 4.25% to 9.15%, depending on service Police/Fire: 4.55% to 13.90%, depending on service Rates include inflation and productivity increases
Other assumptions	Same as those used in the June 30, 2019 funding actuarial valuation

Actuarial assumptions used in the June 30, 2020 valuation were based on the results of the experience study for the period July 1, 2012 through June 30, 2016.

The discount rate used to measure the total pension liability was 7.50% as of June 30, 2020. The projection of cash flows used to determine the discount rate assumed plan contributions will be made in amounts consistent with statutory provisions and recognizing the plan's current funding policy and cost-sharing mechanism between employers and members. For this purpose, all contributions that are intended to fund benefits for all plan members and their beneficiaries are included, except that projected contributions that are intended to fund the service costs for future plan members and their beneficiaries are not included.

Based on those assumptions, the pension plan's fiduciary net position was projected to be available to make all projected future benefit payments for current plan members. Therefore, the long-term expected rate of return on pension plan investments was applied to all periods of projected benefit payments to determine the total pension liability as of June 30, 2020.

Pension expense and deferred outflows/inflows of resources related to pensions

For the year ended June 30, 2021, the City recognized pension expense for PERS of $587,142. At June 30, 2021, the City reported deferred outflows of resources and deferred inflows of resources related to pensions from the following sources:

NOTE 17. Retirement and Pension Plans, Continued

	Deferred Outflows of Resources	Deferred Inflows of Resources
Differences between expected and actual experience	$ 251,848	$ 104,668
Changes in assumptions	227,689	-
Net difference between projected and actual earnings on pension plan investments	-	306,211
Subtotal	479,537	410,879
Changes in proportion and differences between contributions and proportional share of contributions	304,654	631,039
Contributions subsequent to the measurement date	618,605	-
Total	$ 1,402,796	$ 1,041,918
Governmental activities	$ 1,136,058	$ 843,800
Business-type activities	245,744	182,525
Component unit	20,993	15,593
	$ 1,402,796	$ 1,041,918

Average expected remaining service lives 6.13 years

The $618,605 reported as deferred outflows of resources related to PERS pensions resulting from City contributions subsequent to the measurement date will be recognized as a reduction of the net pension liability in the subsequent fiscal year. Other amounts reported as deferred outflows of resources and deferred inflows of resources related to PERS pensions, excluding the changes in proportion and differences between actual contributions and proportionate share of contributions will be recognized in pension expense as follows:

Year Ending June 30,	Deferred Outflows (Inflows) of Resources
2022	$ (128,174)
2023	63,773
2024	73,650
2025	51,529
2026	7,360
2027	521
Thereafter	-

This page intentionally left blank

REQUIRED SUPPLEMENTARY INFORMATION

BUDGETARY COMPARISON SCHEDULES FOR THE FOLLOWING MAJOR FUNDS:

The **General Fund** is the City's primary operating fund. It accounts for all financial resources of the general government, except for those required to be accounted for in another fund.

The **Recreation Fund** is used to account for the City's share of room tax proceeds and the distribution of those funds to the recreation district.

PUBLIC EMPLOYEES' RETIREMENT SYSTEM OF NEVADA SCHEDULES

CITY OF WEST WENDOVER, NEVADA
General Fund
Schedule of Revenues, Expenditures, and Changes in Fund Balance
Budget and Actual
For the Year Ended June 30, 2021
(With Comparative Actual Amounts for the Year Ended June 30, 2020)

	Original Budget	Final Budget	Actual	Variance with Final Budget	2020
Revenues					
Property taxes					
Ad valorem	$ 1,352,955	$ 1,300,300	$ 1,301,208	$ 908	$ 1,280,236
Personal property	242,321	242,321	254,551	12,230	183,309
Central assessments	20,193	20,193	22,476	2,283	20,609
Total property taxes	1,615,469	1,562,814	1,578,235	15,421	1,484,154
Licenses and permits					
Liquor licenses	1,200	150	240	90	120
City gaming licenses	211,300	207,000	206,304	(696)	206,232
Animal licenses	1,000	685	730	45	1,344
Business licenses	16,500	17,100	17,325	225	16,825
Right of way toll	306,800	284,600	255,582	(29,018)	295,900
Building permits	22,000	22,000	20,501	(1,499)	100,569
Special permits and fees	698,400	783,100	856,445	73,345	484,215
Franchise fees	398,000	367,821	380,431	12,610	372,852
Carlines taxes	100	100	101	1	101
Total licenses and permits	1,655,300	1,682,556	1,737,659	55,103	1,478,158
Intergovernmental revenue					
State consolidated revenue	3,026,700	2,971,600	3,174,768	203,168	3,011,445
1.75 cent gas tax	34,100	31,700	34,748	3,048	33,895
2.35 cent gas tax	49,500	48,600	49,167	567	46,835
County road tax	24,900	23,300	25,240	1,940	23,729
County transportation funds	188,288	180,000	180,000	-	193,400
County gaming tax	405,000	426,000	513,765	87,765	385,985
Federal/state grants	374,000	34,000	125,748	91,748	14,043
Infrastructure tax	75,000	75,000	75,243	243	74,572
Marijuana revenue disbursement	6,000	6,000	5,363	(637)	5,411
Reimbursement from Elko County	178,670	179,270	197,367	18,097	179,270
Total intergovernmental revenue	4,362,158	3,975,470	4,381,409	405,939	3,968,585
Charges for services					
Special police services	2,000	1,200	1,360	160	1,795
Work cards	2,000	21,700	24,339	2,639	20,301
Special fire protection services	10,000	14,000	14,625	625	7,804
Dispatch fees	10,000	7,584	7,584	-	5,852
Animal shelter fees	3,000	1,300	1,394	94	1,985
Pipeline administrative services	1,900	1,900	1,900	-	1,900
Miscellaneous	50,106	51,606	55,206	3,600	19,243
Total general	79,006	99,290	106,408	7,118	58,880
Fines and forfeitures					
Fines and fees	70,600	52,350	52,097	(253)	72,274
Total fines and forfeitures	70,600	52,350	52,097	(253)	72,274
Miscellaneous					
Interest	12,000	3,000	2,627	(373)	10,461
Donations	168,000	168,000	166,000	(2,000)	165,000
Rents and royalties	31,200	29,500	19,698	(9,802)	31,197
Miscellaneous	6,000	6,100	9,983	3,883	1,800
Total miscellaneous	217,200	206,600	198,308	(8,292)	208,458
Total revenues	7,999,733	7,579,080	8,054,116	475,036	7,270,509

(continued)

CITY OF WEST WENDOVER, NEVADA
General Fund
Schedule of Revenues, Expenditures, and Changes in Fund Balance
Budget and Actual
For the Year Ended June 30, 2021
(With Comparative Actual Amounts for the Year Ended June 30, 2020), Continued

	Original Budget	Final Budget	Actual	Variance with Final Budget	2020
Expenditures					
General government					
Administration and finance					
Salaries and wages	441,340	441,340	456,885	(15,545)	472,631
Employee benefits	215,175	295,175	293,049	2,126	214,318
Services and supplies	458,400	457,450	437,039	20,411	398,758
Total administration and finance	1,114,915	1,193,965	1,186,973	6,992	1,085,707
Elections					
Services and supplies	2,000	2,000	919	1,081	-
Total general government	1,116,915	1,195,965	1,187,892	8,073	1,085,707
Judicial					
Municipal court					
Salaries and wages	234,897	234,897	226,397	8,500	218,465
Employee benefits	139,139	139,139	121,809	17,330	122,193
Services and supplies	58,450	57,950	42,985	14,965	40,441
Total judicial	432,486	431,986	391,191	40,795	381,099
Public safety					
Police					
Salaries and wages	1,190,225	1,194,925	1,159,065	35,860	1,139,237
Employee benefits	738,293	739,993	711,738	28,255	660,288
Services and supplies	285,800	296,400	268,834	27,566	239,197
Capital outlay	156,400	151,000	149,804	1,196	25,017
Total police department	2,370,718	2,382,318	2,289,441	92,877	2,063,739
Fire					
Salaries and wages	423,949	429,949	424,929	5,020	386,878
Employee benefits	249,097	255,597	249,194	6,403	221,513
Services and supplies	104,600	100,600	62,460	38,140	89,133
Total fire department	777,646	786,146	736,583	49,563	697,524
Dispatch center					
Salaries and wages	341,949	341,949	294,573	47,376	295,807
Employee benefits	186,610	186,610	160,053	26,557	165,527
Services and supplies	47,200	39,450	32,400	7,050	33,401
Total dispatch center	575,759	568,009	487,026	80,983	494,735
Total public safety	3,724,123	3,736,473	3,513,050	223,423	3,255,998
Public works					
Paved streets					
Salaries and wages	70,422	70,422	16,783	53,639	17,575
Employee benefits	38,185	38,185	8,064	30,121	8,778
Services and supplies	250,800	297,700	291,180	6,520	138,425
Total paved streets	359,407	406,307	316,027	90,280	164,778

(continued)

CITY OF WEST WENDOVER, NEVADA
General Fund
Schedule of Revenues, Expenditures, and Changes in Fund Balance
Budget and Actual
For the Year Ended June 30, 2021
(With Comparative Actual Amounts for the Year Ended June 30, 2020), Continued

	Original Budget	Final Budget	Actual	Variance with Final Budget	2020
General					
Salaries and wages	253,521	253,521	235,389	18,132	249,262
Employee benefits	137,467	137,467	132,572	4,895	134,924
Services and supplies	29,700	30,650	26,089	4,561	37,280
Total general	420,688	421,638	394,050	27,588	421,466
Total public works	780,095	827,945	710,077	117,868	586,244
Community development					
Salaries and wages	157,799	175,699	140,607	35,092	137,500
Employee benefits	69,715	80,615	63,209	17,406	60,390
Services and supplies	214,200	185,200	71,812	113,388	88,186
Total community development	441,714	441,514	275,628	165,886	286,076
Health					
Public health services					
Services and supplies	34,400	54,400	42,767	11,633	6,066
Animal control					
Salaries and wages	63,323	63,323	63,523	(200)	61,981
Employee benefits	37,104	37,104	31,858	5,246	30,387
Services and supplies	25,400	21,950	18,870	3,080	16,574
Capital outlay	-	-	-	-	45,552
Total animal control	125,827	122,377	114,251	19,759	154,494
Total health	160,227	176,777	157,018	31,392	160,560
Culture and recreation					
Library service					
Services and supplies	17,600	18,600	13,598	5,002	14,755
Total culture and recreation	17,600	18,600	13,598	5,002	14,755
Community support					
Miscellaneous					
Services and supplies	31,000	31,000	17,019	13,981	48,890
Total community support	31,000	31,000	17,019	13,981	48,890
Debt services	56,062	56,062	56,062	-	56,249
Total expenditures	6,760,222	6,916,322	6,321,535	606,420	5,875,578
Excess (deficiency) of revenues over (under) expenditures	1,239,511	662,758	1,732,581	(1,069,823)	1,394,931
Other financing sources (uses)					
Transfers out	(990,000)	(695,940)	(695,940)	-	(589,000)
Total other financing sources and uses	(990,000)	(695,940)	(695,940)	-	(589,000)
Net change in fund balance	249,511	(33,182)	1,036,641	1,069,823	805,931
Fund balance, beginning of year	2,707,192	2,707,192	2,707,192	-	1,901,261
Fund balance, end of year	$ 2,956,703	$ 2,674,010	$ 3,743,833	$ 1,069,823	$ 2,707,192

CITY OF WEST WENDOVER, NEVADA
Recreation Fund
Schedule of Revenues, Expenditures, and Changes in Fund Balance
Budget and Actual
For the Year Ended June 30, 2021
(With Comparative Actual Amounts for the Year Ended June 30, 2020)

	Original Budget	Final Budget	Actual	Variance with Final Budget	2020
Revenues					
Taxes					
Room taxes	$ 1,864,170	$ 1,510,700	$ 1,602,940	$ 92,240	$ 1,599,360
Total revenues	1,864,170	1,510,700	1,602,940	92,240	1,599,360
Expenditures					
Culture and recreation					
Room tax distribution	1,869,862	1,503,900	1,557,452	(53,552)	1,615,810
Total culture and recreation	1,869,862	1,503,900	1,557,452	(53,552)	1,615,810
Total expenditures	1,869,862	1,503,900	1,557,452	(53,552)	1,615,810
Net change in fund balance	(5,692)	6,800	45,488	38,688	(16,450)
Fund balance, beginning of year	118,114	118,114	118,114	-	134,564
Fund balance, end of year	$ 112,422	$ 124,914	$ 163,602	$ 38,688	$ 118,114

CITY OF WEST WENDOVER, NEVADA
Schedule of the Proportionate Share of the Net Pension Liability
Public Employees' Retirement System of Nevada
June 30, 2021
Last 10 Fiscal Years

	Reporting Fiscal Year (Measurement Date)						
	2021 (2020)	2020 (2019)	2019 (2018)	2018 (2017)	2017 (2016)	2016 (2015)	2015 (2014)
Proportion of the net pension liability (asset)	0.058200%	0.056610%	0.062480%	0.062300%	0.063600%	0.059820%	0.068384%
Proportionate share of the net pension liability (asset)	$ 8,106,010	$ 7,719,816	$ 8,521,101	$ 8,286,307	$ 8,558,081	$ 6,854,700	$ 6,653,165
Covered payroll	$ 3,604,289	$ 3,394,178	$ 3,327,353	$ 3,429,997	$ 3,355,482	$ 2,961,477	$ 3,113,721
Proportionate share of the net pension liability (asset) as a percentage of its covered payroll	224.90%	227.44%	256.09%	241.58%	255.05%	231.46%	213.67%
Plan fiduciary net position as a percentage of the total pension liability	77.0%	76.5%	74.4%	72.2%	75.1%	76.30%	76.30%

The City implemented GASB 68 in fiscal year 2015. Prior year information is not available.

CITY OF WEST WENDOVER, NEVADA
Schedule of Contributions
Public Employees' Retirement System of Nevada
June 30, 2021
Last 10 Fiscal Years

	Reporting Fiscal Year						
	2021	**2020**	**2019**	**2018**	**2017**	**2016**	**2015**
Contractually required contribution	$ 618,605	$ 610,996 0	$ 545,004	$ 579,653	$ 559,234	$ 539,193	$ 461,652
Contributions in relation to the contractually required contribution	$ (618,605)	$ (610,996)	$ (545,004)	$ (579,653)	$ (559,234)	$ (539,193)	$ (461,652)
Contribution deficiency (excess)	$ -	$ -	$ -	$ -	$ -	$ - 1	$ -
Covered payroll	$ 3,650,188	$ 3,604,289	$ 3,394,178	$ 3,327,353	$ 3,429,997	$ 3,355,482	$ 2,961,477
Contributions as a percentage of covered-employee payroll	16.95%	16.95%	16.06%	16.30%	16.07%	15.59%	15.53%

The City implemented GASB 68 in fiscal year 2015. Prior year information is not available.

This page left intentionally blank

SUPPLEMENTARY INFORMATION

NONMAJOR GOVERNMENTAL FUNDS

Special revenue funds are used to account for specific revenues that are legally restricted to expenditure for particular purposes.

The **Seizure and Forfeiture Fund** is used to account for seizures and forfeitures received by the City under City Resolution 1992-09, as provided for in NRS 179.1187

The **Court Administrative Assessment Fund** is used to account for fees collected by the court as required by Nevada Revised Statues Section 176.059, which are used to improve the operations of the court.

The **Welcome Center Fund** is used to account for the merchandise sales and operations of the Welcome Center as established under City Resolution 2001-04.

The **Wendover Will Landmark Fund** is used to account for the construction, maintenance, and related revenues and expenditures associated with the Wendover Will Landmark as established by City Resolution 2005-01.

The **Grant Fund** is used to account for various grants receipts and expenditures as outlined in Resolution 1996-14.

Capital project funds are used to account for the acquisition and construction of major capital facilities other than those financed by proprietary funds.

The **Capital Projects Fund** is used to account for the acquisition or construction of capital facilities as outlined in Resolution 1997-14.

The **Ad Valorem Capital Projects Fund** is used to account for revenue received from a special ad valorem tax that must be recorded in a capital projects fund and dedicated to capital project needs within the City, as established under NRS 268.045.

CITY OF WEST WENDOVER, NEVADA
Combining Balance Sheet
Nonmajor Governmental Funds
June 30, 2021

	Special Revenue					Capital Project		Total
	Seizure Forfeiture Fund	Court Administrative Assessment Fund	Welcome Center Fund	Wendover Will Landmark Fund	Grant Fund	Capital Projects Fund	Ad Valorem Capital Projects Fund	Nonmajor Governmental Funds
Assets								
Cash and investments	$ 22,960	$ 63,879	$ 17,238	$ 14,640	$ 34,440	$ 179,300	$ 27,092	$ 359,549
Due from other governments	-	-	-	-	-	-	17,468	17,468
Inventory	-	-	1,307	-	-	-	-	1,307
Restricted cash	-	-	-	-	-	313,500	-	313,500
Total assets	$ 22,960	$ 63,879	$ 18,545	$ 14,640	$ 34,440	$ 492,800	$ 44,560	$ 691,824
Liabilities								
Accounts payable	$ 19,173	$ -	$ 915	$ 190	$ -	$ 108,839	$ -	$ 129,117
Due to other funds	-	-	-	-	34,440	-	-	34,440
Total liabilities	19,173	-	915	190	34,440	108,839	-	163,557
Fund Balances								
Nonspendable	-	-	1,307	-	-	-	-	1,307
Restricted	3,787	63,879	16,323	-	-	383,961	44,560	512,510
Committed	-	-	-	14,450	-	-	-	14,450
Total fund balances	3,787	63,879	17,630	14,450	-	383,961	44,560	528,267
Total liabilities and fund balances	$ 22,960	$ 63,879	$ 18,545	$ 14,640	$ 34,440	$ 492,800	$ 44,560	$ 691,824

CITY OF WEST WENDOVER, NEVADA
Combining Statement of Revenues, Expenditures, and Changes in Fund Balances
Nonmajor Governmental Funds
For the Year Ended June 30, 2021

	Special Revenue					Capital Project		
	Seizure Forfeiture Fund	Court Administrative Assessment Fund	Welcome Center Fund	Wendover Will Landmark Fund	Grant Fund	Capital Projects Fund	Ad Valorem Capital Projects Fund	Total Nonmajor Governmental Funds
Revenues								
Other taxes	$ -	$ -	$ -	$ -	$ -	$ -	$ 57,999	$ 57,999
Intergovernmental	-	-	85,450	-	662,607	22,528	-	770,585
Charges for services	-	6,900	-	-	-	-	-	6,900
Miscellaneous	-	51	1,838	567	-	278,440	-	280,896
Total revenues	-	6,951	87,288	567	662,607	300,968	57,999	1,116,380
Expenditures								
Judicial	-	3,615	-	-	-	-	-	3,615
Public safety	-	-	-	-	662,607	-	-	662,607
Community support	-	-	277,654	20,246	-	-	-	297,900
Capital outlay	-	-	-	-	-	256,959	-	256,959
Debt service	-	-	-	-	-	518,134	-	518,134
Total expenditures	-	3,615	277,654	20,246	662,607	775,093	-	1,739,215
Excess (deficiency) of revenues over (under) expenditures	-	3,336	(190,366)	(19,679)	-	(474,125)	57,999	(622,835)
Other financing sources (uses)								
Transfers in	-	-	171,120	22,100	-	543,305	-	736,525
Transfers out	-	-	-	-	-	-	(40,585)	(40,585)
Total other financing sources (uses)	-	-	171,120	22,100	-	543,305	(40,585)	695,940
Net change in fund balances	-	3,336	(19,246)	2,421	-	69,180	17,414	73,105
Fund balances, beginning of year	3,787	60,543	36,876	12,029	-	314,781	27,146	455,162
Fund balances, end of year	$ 3,787	$ 63,879	$ 17,630	$ 14,450	$ -	$ 383,961	$ 44,560	$ 528,267

CITY OF WEST WENDOVER, NEVADA
Seizure Forfeiture Fund
Schedule of Revenues, Expenditures, and Changes in Fund Balance
Budget and Actual
For the Year Ended June 30, 2021
(With Comparative Actual Amounts for the Year Ended June 30, 2020)

	Original Budget	Final Budget	Actual	Variance with Final Budget	2020
Revenues					
Miscellaneous					
Interest income	$ -	$ -	$ -	$ -	$ -
Total revenues	-	-	-	-	-
Expenditures					
Public Safety					
Services and supplies	-	-	-	-	-
Total expenditures	-	-	-	-	-
Excess of revenues over (under) expenditures	-	-	-	-	-
Other financing sources					
Transfers in	-	-	-	-	-
Transfers out	-	-	-	-	-
Net change in fund balance	-	-	-	-	-
Fund balance, beginning of year	3,787	3,787	3,787	-	3,787
Fund balance, end of year	$ 3,787	$ 3,787	$ 3,787	$ -	$ 3,787

CITY OF WEST WENDOVER, NEVADA
Court Administrative Assessments Fund
Schedule of Revenues, Expenditures, and Changes in Fund Balance
Budget and Actual
For the Year Ended June 30, 2021
(With Comparative Actual Amounts for the Year Ended June 30, 2020)

	Original Budget	Final Budget	Actual	Variance with Final Budget	2020
Revenues					
Charges for services					
Court assessments	$ 8,500	$ 7,200	$ 6,900	$ (300)	$ 9,679
Miscellaneous					
Interest	400	50	51	1	297
Total revenues	8,900	7,250	6,951	(299)	9,976
Expenditures					
Judicial					
Services and supplies	1,000	400	383	17	570
Capital outlay	3,000	6,850	3,232	3,618	6,839
Total expenditures	4,000	7,250	3,615	3,635	7,409
Excess of revenue and other sources over (under) expenditures	4,900	-	3,336	(3,934)	2,567
Other financing sources					
Transfers in	-	-	-	-	9,000
Net change in fund balance	4,900	-	3,336	(3,934)	11,567
Fund balance, beginning of year	60,543	60,543	60,543	-	48,976
Fund balance, end of year	$ 65,443	$ 60,543	$ 63,879	$ 3,336	$ 60,543

CITY OF WEST WENDOVER, NEVADA
Welcome Center Fund
Schedule of Revenues, Expenditures, and Changes in Fund Balance
Budget and Actual
For the Year Ended June 30, 2021
(With Comparative Actual Amounts for the Year Ended June 30, 2020)

	Original Budget	Final Budget	Actual	Variance with Final Budget	2020
Revenues					
Intergovernmental					
Operating grants	$ 40,000	$ 32,000	$ 9,750	$ (22,250)	$ 31,150
Elko county recreation board	83,000	75,700	75,700	-	75,700
Total intergovernmental	123,000	107,700	85,450	(22,250)	106,850
Miscellaneous					
Merchandise sales	2,500	1,500	1,838	338	3,050
Total miscellaneous	2,500	1,500	1,838	338	3,050
Total revenues	125,500	109,200	87,288	(21,912)	109,900
Expenditures					
Community support					
Salaries and wages	106,168	106,168	106,593	(425)	102,286
Employee benefits	59,552	59,552	59,978	(426)	54,876
Services and supplies	69,100	49,600	52,662	(3,062)	29,506
Capital outlay	80,000	65,000	58,421	6,579	54,961
Total expenditures	314,820	280,320	277,654	2,666	241,629
Excess of revenues over (under) expenditures	(189,320)	(171,120)	(190,366)	(19,246)	(131,729)
Other financing sources					
Transfers in	175,000	171,120	171,120	-	110,000
Net change in fund balance	(14,320)	-	(19,246)	(19,246)	(21,729)
Fund balance, beginning of year	36,876	36,876	36,876	-	58,605
Fund balance, end of year	$ 22,556	$ 36,876	$ 17,630	$ (19,246)	$ 36,876

CITY OF WEST WENDOVER, NEVADA
Wendover Will Landmark Fund
Schedule of Revenues, Expenditures, and Changes in Fund Balance
Budget and Actual
For the Year Ended June 30, 2021
(With Comparative Actual Amounts for the Year Ended June 30, 2020)

	Original Budget	Final Budget	Actual	Variance with Final Budget	2020
Revenues					
Miscellaneous					
Donations from private sources	$ 1,000	$ -	$ -	$ -	$ -
Merchandise sales	-	150	150	-	321
Interest revenue	200	450	417	(33)	77
Total revenues	1,200	600	567	(33)	398
Expenditures					
Community Support					
Services and supplies	20,500	22,700	20,246	2,454	17,891
Total expenditures	20,500	22,700	20,246	2,454	17,891
Excess of revenues over (under) expenditures	(19,300)	(22,100)	(19,679)	2,421	(17,493)
Other financing sources					
Transfers in	15,000	22,100	22,100	-	20,000
Net change in fund balance	(4,300)	-	2,421	2,421	2,507
Fund balance, beginning of year	12,029	12,029	12,029	-	9,522
Fund balance, end of year	$ 7,729	$ 12,029	$ 14,450	$ 2,421	$ 12,029

CITY OF WEST WENDOVER, NEVADA
Grant Fund
Schedule of Revenues, Expenditures, and Changes in Fund Balance
Budget and Actual
For the Year Ended June 30, 2021
(With Comparative Actual Amounts for the Year Ended June 30, 2020)

	Original Budget	Final Budget	Actual	Variance with Final Budget	2020
Revenues					
Intergovernmental					
Grant revenue	$ -	$ 745,898	$ 662,607	$ (83,291)	$ 34,440
Other grant revenue	-	-	-	-	-
Total intergovernmental	-	745,898	662,607	(83,291)	34,440
Total revenues	-	745,898	662,607	(83,291)	34,440
Expenditures					
Public saftey					
Salaries and wages	-	173,000	172,996	4	25,889
Employee benefits	-	197,237	278,155	(80,918)	8,551
Services and supplies	-	211,456	211,456	-	-
Total public safey	-	581,693	662,607	(80,914)	34,440
Total expenditures	-	581,693	662,607	(80,914)	34,440
Net change in fund balance	-	164,205	-	(164,205)	-
Fund balance, beginning of year	-	-	-	-	
Fund balance, end of year	$ -	$ 164,205	$ -	$ (164,205)	$ -

CITY OF WEST WENDOVER, NEVADA
Capital Projects Fund
Schedule of Revenues, Expenditures, and Changes in Fund Balance
Budget and Actual
For the Year Ended June 30, 2021
(With Comparative Actual Amounts for the Year Ended June 30, 2020)

	Original Budget	Final Budget	Actual	Variance with Final Budget	2020
Revenues					
Intergovernmental					
Federal grants	$ 525,000	$ 4,575	$ 22,528	$ 17,953	$ -
Total intergovernmental	525,000	4,575	22,528	17,953	-
Miscellaneous					
Interest income	-	170	160	(10)	861
Donations	-	25,000	25,000	-	-
Miscellaneous	2,500	-	-	-	4,898
Sale of capital assets	-	253,280	253,280	-	-
Total miscellaneous	2,500	278,450	278,440	(10)	5,759
Total revenues	527,500	283,025	300,968	17,943	5,759
Expenditures					
General government					
Capital outlay	22,231,800	348,620	256,959	91,661	121,505
Total general government	22,231,800	348,620	256,959	91,661	121,505
Debt service					
Debt service - principal	318,918	318,918	318,918	-	305,507
Debt service - interest	199,216	199,216	199,216	-	209,617
Total debt service	518,134	518,134	518,134	-	515,124
Total expenditures	22,749,934	866,754	775,093	91,661	636,629
Excess of revenues over (under) expenditures	(22,222,434)	(583,729)	(474,125)	109,604	(630,870)
Other financing sources (uses)					
Debt proceeds	21,346,800	20,425	-	(20,425)	-
Transfers in	850,000	543,305	543,305	-	499,575
Total other financing sources	22,196,800	563,730	543,305	(20,425)	499,575
Net change in fund balance	(25,634)	(19,999)	69,180	89,179	(131,295)
Fund balance, beginning of year	314,781	314,781	314,781	-	446,076
Fund balance, end of year	$ 289,147	$ 294,782	$ 383,961	$ 89,179	$ 314,781

CITY OF WEST WENDOVER, NEVADA
Ad Valorem Capital Projects Fund
Schedule of Revenues, Expenditures, and Changes in Fund Balance
Budget and Actual
For the Year Ended June 30, 2021
(With Comparative Actual Amounts for the Year Ended June 30, 2020)

	Original Budget	Final Budget	Actual	Variance with Final Budget	2020
Revenues					
Other taxes					
Ad valorem tax	$ 50,000	$ 42,000	$ 57,999	$ 15,999	$ 48,160
Total revenues	50,000	42,000	57,999	15,999	48,160
Expenditures					
	-	-	-	-	-
Total expenditures	-	-	-	-	-
Excess of revenues over (under) expenditures	50,000	42,000	57,999	15,999	48,160
Other financing sources (uses)					
Transfers out	(50,000)	(40,585)	(40,585)	-	(49,575)
Net change in fund balance	-	1,415	17,414	15,999	(1,415)
Fund balance, beginning of year	27,146	27,146	27,146	-	28,561
Fund balance, end of year	$ 27,146	$ 28,561	$ 44,560	$ 15,999	$ 27,146

MAJOR BUSINESS-TYPE FUNDS

CITY OF WEST WENDOVER, NEVADA
Water Fund
Schedule of Revenues, Expenditures, and Changes in Net Position
Budget and Actual
For the Year Ended June 30, 2021
(With Comparative Actual Amounts for the Year Ended June 30, 2020)

	Original Budget	Final Budget	Actual	Variance with Final Budget	2020
Operating revenues					
Charges for services	$ 1,353,300	$ 1,203,000	$ 1,300,479	$ 97,479	$ 1,262,586
Total operating revenues	1,353,300	1,203,000	1,300,479	97,479	1,262,586
Operating expenses					
Water purchases	622,100	570,000	578,326	(8,326)	508,677
Salaries and wages	196,901	196,901	220,864	(23,963)	274,927
Employee benefits	116,481	116,481	118,910	(2,429)	137,238
Services and supplies	339,916	333,116	307,444	25,672	399,073
Depreciation and amortization	138,001	143,000	140,220	2,780	142,684
Total operating expenses	1,413,399	1,359,498	1,365,764	(6,266)	1,462,599
Operating income	(60,099)	(156,498)	(65,285)	91,213	(200,013)
Nonoperating revenues (expenses)					
Interest income	56,732	51,732	38,280	(13,452)	75,950
Impact fees	12,000	1,500	1,496	(4)	8,973
Miscellaneous income	10,000	13,000	15,825	2,825	6,870
Contributions from component unit for debt payments	10,584	10,584	10,584	-	10,584
Capital outlay	(1,000)	(1,000)	(788)	212	17
Interest expense	(71,332)	(71,332)	(58,375)	12,957	(81,947)
Total nonoperating revenues (expenses)	16,984	4,484	7,022	2,538	20,447
Change in net position	(43,115)	(152,014)	(58,263)	93,751	(179,566)
Total net position, beginning of year	3,670,653	3,670,653	3,670,653	-	3,850,219
Total net position, end of year	$ 3,627,538	$ 3,518,639	$ 3,612,390	$ 93,751	$ 3,670,653

CITY OF WEST WENDOVER, NEVADA
Sewer Fund
Schedule of Revenues, Expenditures, and Changes in Net Position
Budget and Actual
For the Year Ended June 30, 2021
(With Comparative Actual Amounts for the Year Ended June 30, 2020)

	Original Budget	Final Budget	Actual	Variance with Final Budget	2020
Operating revenues					
Charges for services:					
Charges for services	$ 1,264,700	$ 1,035,200	$ 1,115,614	$ 80,414	$ 1,111,355
Total operating revenues	1,264,700	1,035,200	1,115,614	80,414	1,111,355
Operating expenses					
Salaries and wages	296,049	296,049	287,898	8,151	285,967
Employee benefits	180,788	180,788	174,699	6,089	160,130
Services and supplies	493,400	426,600	408,089	18,511	465,548
Capital outlay	12,000	-	-	-	12,142
Depreciation and amortization	555,500	555,500	546,726	8,774	550,569
Total operating expenses	1,537,737	1,458,937	1,417,412	41,525	1,474,356
Operating loss	(273,037)	(423,737)	(301,798)	121,939	(363,001)
Nonoperating revenues (expenses)					
Interest income	1,000	270	223	(47)	1,338
Impact fees	12,000	-	-	-	6,691
Miscellaneous income	700	6,000	8,056	2,056	2,617
Interest expense	(70,085)	(70,085)	(70,162)	(77)	(74,275)
Total nonoperating revenues	(56,385)	(63,815)	(61,883)	1,932	(63,629)
Change in net position	(329,422)	(487,552)	(363,681)	123,871	(426,630)
Total net position, beginning of year	8,448,750	8,448,750	8,448,750	-	8,875,380
Total net position, end of year	$ 8,448,750	$ 8,448,750	$ 8,085,069	$ (363,681)	$ 8,448,750

CITY OF WEST WENDOVER, NEVADA
Garbage / Compost Facility Fund
Schedule of Revenues, Expenditures, and Changes in Net Position
Budget and Actual
For the Year Ended June 30, 2021
(With Comparative Actual Amounts for the Year Ended June 30, 2020)

	Original Budget	Final Budget	Actual	Variance with Final Budget	2020
Operating revenues					
Charges for services	$ 1,535,100	$ 1,360,700	$ 1,388,999	$ 28,299	$ 1,378,388
Total operating revenues	1,535,100	1,360,700	1,388,999	28,299	1,378,388
Operating expenses					
Salaries and wages	369,920	369,920	282,584	87,336	253,578
Employee benefits	206,645	206,645	158,556	48,089	142,435
Services and supplies	251,598	238,098	207,718	30,380	213,201
Capital outlay	20,000	20,000	-	20,000	9,632
Depreciation and amortization	344,000	338,200	382,278	(44,078)	381,259
Total operating expenses	1,192,163	1,172,863	1,031,136	141,727	1,000,105
Operating income	342,937	187,837	357,863	170,026	378,283
Nonoperating revenues (expenses)					
Interest income	6,000	1,500	1,580	80	6,815
Miscellaneous income	3,000	20,000	21,240	1,240	11,423
Interest expense	(22,766)	(22,766)	(22,867)	(101)	(32,746)
Total nonoperating expenses	(13,766)	(1,266)	(47)	1,219	(14,508)
Change in net position	329,171	186,571	357,816	171,245	363,775
Total net position, beginning of year	3,968,506	3,968,506	3,968,506	-	3,604,731
Total net position, end of year	$ 4,297,677	$ 4,155,077	$ 4,326,322	$ 171,245	$ 3,968,506

COMPONENT UNIT SUPPLEMENTARY SCHEDULES

CITY OF WEST WENDOVER, NEVADA
Component Unit – Johnson Springs
Statement of Net Position
For the Year Ended June 30, 2021

	Component Unit Johnson Springs
Assets	
Current assets	
Cash and investments	$ 282,483
Accounts receivable, net	77,787
Inventory	14,221
Total current assets	374,491
Noncurrent assets	
Land	18,000
Buildings	6,836,936
Improvements other than buildings	411,632
Machinery and equipment	571,254
Utility system	5,316,197
Less accumulated depreciation	(7,614,560)
Total noncurrent assets	5,539,459
Total assets	5,913,950
Deferred Outflows of Resources	
Deferred outflows related to pensions	20,993
Liabilities	
Current liabilities	
Accounts payable	58,252
Accrued liabilities	1,687
Due to primary government	2,049,614
Compensated absences	9,848
Total current liabilities	2,119,401
Noncurrent liabilities:	
Net pension liability	121,309
Total noncurrent liabilities	121,309
Total liabilities	2,240,710
Deferred Inflows of Resources	
Deferred inflows related to pensions	15,593
Net Position	
Net investment in capital assets	3,489,845
Unrestricted	188,795
Total net position	$ 3,678,640

CITY OF WEST WENDOVER, NEVADA
Component Unit – Johnson Springs
Schedule of Revenues, Expenditures, and Changes in Net Position
Budget and Actual
For the Year Ended June 30, 2021
(With Comparative Actual Amounts for the Year Ended June 30, 2020)

	Original Budget	Final Budget	Actual	Variance with Final Budget	2020
Operating revenues					
Charges for services	$ 700,000	$ 694,000	$ 721,512	$ 27,512	$ 580,555
Total operating revenues	700,000	694,000	721,512	27,512	580,555
Operating expenses					
Water purchases	112,000	112,500	112,866	(366)	112,211
Salaries and wages	57,000	57,000	62,414	(5,414)	47,186
Employee benefits	44,300	44,300	10,284	34,016	(198)
Services and supplies	271,900	252,700	236,155	16,545	257,005
Depreciation and amortization	392,300	392,300	392,004	296	392,587
Total operating expenses	877,500	858,800	813,723	45,077	808,791
Operating loss	(177,500)	(164,800)	(92,211)	72,589	(228,236)
Nonoperating revenues (expenses)					
Interest income	30,000	5,250	5,188	(62)	25,241
Miscellaneous income	12,000	-	12,000	12,000	14,921
Debt paid through primary government	(10,584)	(10,584)	(10,584)	-	(10,584)
Interest expense	(50,732)	(50,732)	(36,607)	14,125	(66,606)
Total nonoperating revenues (expenses)	(19,316)	(56,066)	(30,003)	26,063	(37,028)
Change in net position	(196,816)	(220,866)	(122,214)	98,652	(265,264)
Total net position, beginning of year	3,800,854	3,800,854	3,800,854	-	4,066,118
Total net position, end of year	$ 3,604,038	$ 3,579,988	$ 3,678,640	$ 98,652	$ 3,800,854

CITY OF WEST WENDOVER, NEVADA
Component Unit – Johnson Springs
Statement of Cash Flows
June 30, 2021

	Component Unit Johnson Springs
Cash Flows From Operating Activities:	
Cash received from customers, service fees	$ 707,999
Cash paid to suppliers	(313,610)
Cash paid to employees	(82,583)
Net cash flows from operating activities	311,806
Cash Flows From Noncapital Financing Activities:	
Net component unit receipts/(payments)	(119,117)
Cash received from miscellaneous sources	12,000
Net cash flows from noncapital financing activities	(107,117)
Cash Flows From Capital and Related Financing Activities:	
Interest paid on capital debt	(36,607)
Acquisition and construction of capital assets	-
Net cash flows from capital and related financing activities	(36,607)
Cash Flows From Investing Activities:	
Interest income	5,188
Net change in cash and cash equivalents	173,270
Cash and investments, including restricted cash, beginning of year	109,213
Cash and Cash Equivalents, Including Restricted Cash , End of Year	$ 282,483
Reconciliation of operating income to net cash flows from operating activities:	
Operating income (loss)	$ (92,211)
Adjustments to reconcile net income (loss) to net cash from operating activities	
Depreciation/amortization	392,004
Pension expense	(3,801)
Employer pension contributions	(10,214)
Changes in operating assets and liabilities:	
(Increase) decrease in receivables	(13,513)
(Increase) decrease in inventory	(2,930)
Increase (decrease) in accounts payable	38,341
Increase (decrease) in compensated absences	4,130
Net cash flows from operating activities	$ 311,806

OTHER COMMUNICATIONS FROM INDEPENDENT AUDITORS

This page intentionally left blank

HINTON BURDICK
CPAs & ADVISORS

Independent Auditors' Report on Internal Control Over Financial Reporting and on Compliance and Other Matters Based on an Audit of Financial Statements Performed in Accordance with *Government Auditing Standards*

The Honorable Mayor and City Council
West Wendover, Nevada

We have audited, in accordance with the auditing standards generally accepted in the United States of America and the standards applicable to financial audits contained in *Government Auditing Standards* issued by the Comptroller General of the United States, the financial statements of the governmental activities, the business-type activities, the aggregate discretely presented component units, each major fund, and the aggregate remaining fund information of City of West Wendover, Nevada, as of and for the year ended June 30, 2021, and the related notes to the financial statements, which collectively comprise City of West Wendover, Nevada 's basic financial statements and have issued our report thereon dated September 30, 2021.

Internal Control Over Financial Reporting

In planning and performing our audit of the financial statements, we considered City of West Wendover, Nevada's internal control over financial reporting (internal control) as a basis for designing audit procedures that are appropriate in the circumstances for the purpose of expressing our opinions on the financial statements, but not for the purpose of expressing an opinion on the effectiveness of City of West Wendover, Nevada's internal control. Accordingly, we do not express an opinion on the effectiveness of City of West Wendover, Nevada's internal control.

A *deficiency in internal control* exists when the design or operation of a control does not allow management or employees, in the normal course of performing their assigned functions, to prevent, or detect and correct, misstatements on a timely basis. A *material weakness* is a deficiency, or a combination of deficiencies, in internal control, such that there is a reasonable possibility that a material misstatement of the entity's financial statements will not be prevented, or detected and corrected on a timely basis. A *significant deficiency* is a deficiency, or a combination of deficiencies, in internal control that is less severe than a material weakness, yet important enough to merit attention by those charged with governance.

Our consideration of internal control was for the limited purpose described in the first paragraph of this section and was not designed to identify all deficiencies in internal control that might be material weaknesses or significant deficiencies. Given these limitations, during our audit we did not identify any deficiencies in internal control that we consider to be material weaknesses. However, material weaknesses may exist that have not been identified.

Compliance and Other Matters

As part of obtaining reasonable assurance about whether City of West Wendover, Nevada's financial statements are free from material misstatement, we performed tests of its compliance with certain provisions of laws, regulations, contracts, and grant agreements, noncompliance with which could have a direct and material effect on the financial statements. However, providing an opinion on compliance with those provisions was not an objective of our audit, and accordingly, we do not express such an opinion. The results of our tests disclosed no instances of noncompliance or other matters that are required to be reported under *Government Auditing Standards*.

Purpose of this Report

The purpose of this report is solely to describe the scope of our testing of internal control and compliance and the results of that testing, and not to provide an opinion on the effectiveness of the entity's internal control or on compliance. This report is an integral part of an audit performed in accordance with *Government Auditing Standards* in considering the entity's internal control and compliance. Accordingly, this communication is not suitable for any other purpose.



HintonBurdick, PLLC
St. George, Utah
September 30, 2021

HINTON BURDICK
CPAs & ADVISORS

Independent Auditor's Report on Compliance
With Statutes and Administrative Code in Accordance
With NRS 354.624(4) and 354.6241

The Honorable Mayor and City Council
West Wendover, NV

We have audited the basic financial statements of the City of West Wendover, Nevada for the year ended June 30, 2021, and have issued our report thereon dated September 30, 2021. Our audit also included test work on the City of West Wendover's compliance with selected requirements identified in the State of Nevada Revised Statutes (NRS) including, but not limited to, NRS section 354.624 and section 354.6241.

The management of the City of West Wendover is responsible for the City's compliance with all requirements identified above. Our responsibility is to express an opinion on compliance with those requirements based on our audit and make specific statements regarding funds established and the status of prior year findings and recommendations; accordingly, we make the following statements:

The City of West Wendover had one prior year compliance finding that was resolved during fiscal year 2021. We noted one new instance of noncompliance during fiscal year 2021. See the accompanying schedule of findings and recommendations.

The City of West Wendover has established several funds in accordance with NRS 354.624 as follows:

Enterprise Funds:
- Water Fund
- Sewer Fund
- Garbage / Compost Facility Fund

Funds whose balance is required to be used only for a specific purpose or carried forward to the succeeding fiscal year in any designated amount:

Special Revenue Funds:
- Seizure Forfeiture Fund
- Recreation Fund
- Court Administrative Assessment Fund
- Medical Clinic Facilities Fund (combined with the General Fund for reporting)
- Grants Fund
- Welcome Center Fund
- Wendover Will Landmark Fund

Capital Projects Funds:
- Capital Projects Fund
- Ad Valorem Capital Projects Fund

The City of West Wendover appears to be using the above listed funds expressly for the purposes for which they were created and in accordance with NRS 354.624. The funds are being administered in accordance with Generally Accepted Accounting Principles and the reserves, as applicable, appear reasonable and necessary to carry out the purposes of the funds. Sources of revenues available and fund balances and net position are reflected in the individual fund financial statements.

The statutory and regulatory requirements of the funds are as follows:

Water Fund:	NRS 354.517
Sewer Fund:	NRS 354.517
Garbage / Compost Facility Fund:	NRS 354.517
Seizure Forfeiture Fund:	Resolution 1992-09
Recreation Fund:	NRS 268.798
Court Administrative Assessment Fund:	NRS 176.059
Grant Fund:	Resolution 1996-14
Welcome Center Fund:	Resolution 2001-04
Wendover Will Landmark Fund	Resolution 2005-01
Capital Projects Fund	Resolution 1997-14
Ad Valorem Capital Projects Fund	NRS 268.045

NRS 354.624 requires that a schedule of all fees imposed by the City which were subject to the provisions of NRS 354.5989 be provided. The City has not increased any fees subject to the limitations provided by NRS 354.5989; however the schedule for these fees immediately follows this report.

We conducted our audit in accordance with auditing standards generally accepted in the United States of America and *Government Auditing Standards*, issued by the Comptroller General of the United States. Those standards require that we plan and perform the audit to obtain reasonable assurance about whether material noncompliance with the requirements referred to above occurred. An audit includes examining, on a test basis, evidence about the City's compliance with those requirements. We believe that our audit provides a reasonable basis for our opinion.

In our opinion, The City of West Wendover, Nevada complied, in all material respects, with the requirements identified above for the year ended June 30, 2021.

The purpose of this report is solely to describe the scope of our testing of the applicable compliance requirements identified in the Nevada Revised Statutes (NRS) and the results of that testing based on the state requirements. Accordingly, this report is not suitable for any other purpose.



HintonBurdick, PLLC
St. George, Utah
September 30, 2021

CITY OF WEST WENDOVER, NEVADA
Schedule of Fees Imposed Subject to the Provision of NRS 354.5989
Limitation on Fees for Business Licenses
For the Year ended June 30, 2021

Flat Fixed Fees:

Business license revenue adjusted base at June 30, 2020		$ 21,856
Adjustment to Base:		
1. Percentage change in population of the local government	0.0%	
2. Percentage increase in the Consumer Price Index for the year ending on December 31, next preceding the year for which the limit is being calculated	1.4%	1.4%
Increase in base		306
Adjusted base at June 30, 2020		22,162
Actual revenue		17,325
Amount over (under) allowable amount		$ (4,837)

This page intentionally left blank

HINTON BURDICK
CPAs & ADVISORS

Findings and Recommendations
For the Fiscal Year Ended June 30, 2021

The Honorable Mayor and
City Council
City of West Wendover, Nevada

Professional standards require that we communicate, in writing; deficiencies in internal control over financial reporting that are considered significant deficiencies or material weaknesses that are identified during the audit of the financial statements. Nevada Revised Statutes (NRS) require us to report instances of noncompliance with laws and regulations. During our audit of the City of West Wendover, Nevada for the fiscal year ended June 30, 2021, we noted several improvements in the City's accounting and budgeting system and we wish to commend the City for their achievements. We also observed a few areas needing corrective action in order for the City to be in compliance with laws and regulations as well as a few areas that, if improved, would strengthen the City's accounting system and control over its assets. These items are discussed below for your consideration.

INTERNAL CONTROL OVER FINANCIAL REPORTING:

Material Weakness:

No items noted

Significant Deficiencies:

No items noted

COMPLIANCE AND OTHER MATTERS:

Compliance:

2021-001 Budgetary Compliance

Criteria: NRS 354.626 states, "No governing body or member thereof, officer, office, department or agency may, during any fiscal year, expend or contract to expend any money or incur any liability, or enter into any contract which by its terms involves the expenditure of money, in excess of the amounts appropriated for that function,"

Condition: Expenditures in the Recreation Fund exceeded final budget appropriations by $53,552 for fiscal year 2021.

Cause: The City's budgetary controls did not prevent the City from over expending the approved budget in the recreation fund.

Effect: The Recreation Fund expenditures exceed the final approved budget for fiscal year 2021.

Recommendation: We recommend the City reevaluate the budgetary controls that are designed to ensure compliance with NRS 354.626 and make adjustments as needed.

Responses

Please respond to the above Findings and Recommendations in letter form.

This report is intended solely for the information and use of the City Council, management, and various federal and state agencies and is not intended to be and should not be used by anyone other than these specified parties. However, this report is a matter of public record and its distribution is not limited.

It has been a pleasure to be of service to the City this past year. We would like to express special thanks to all those who assisted us so efficiently in this year's audit. We invite you to ask questions of us throughout the year as you feel necessary. We look forward to a continued professional relationship.

Sincerely,

HintonBurdick, PLLC

HintonBurdick, PLLC
September 30, 2021

CITY OF WEST WENDOVER

P.O. Box 2825 • 1111 N. Gene L. Jones Way • West Wendover, NV 89883
Office (775) 664-3081 Fax (775) 664-3720

October 28, 2021

State of Nevada
Department of Taxation
1550 College Parkway, Suite 115
Attn: Keri Gransbery
Carson City NV 89706-7937

RE: Annual Audit Report – Fiscal Year 2021 - Corrective Action Plan

Dear Keri,

As requested by the State of Nevada - Department of Taxation, and in an effort to correct Compliance and Other Matters, per pages 89-90 of the City of West Wendover Financial Statements, the City submits the following:

On November 16, 2021, the audit firm of Hinton Burdick will present the annual audit for fiscal year 2021, and make the Council aware of one finding. As required, staff will present a corrective action plan for the finding to the Council for its approval at that same meeting. The finding and the plan of corrective action are outlined below.

Finding number 2021-001, addresses a compliance issue in violation of NRS 354.626 which states that, "No governing body or member thereof, officer, office, department or agency may, during any fiscal year, expend or contract to expend any money or incur any liability, or enter into any contract which by its terms involves the expenditure of money, in excess of the amounts appropriated for that function." Expenditures in the Recreation Fund exceeded final budget appropriations by $53,552 for fiscal year 2021. The report states that the City's budgetary controls did not prevent the City from over expending the approved budget in that fund.

The City recognizes that expenditures in the Recreation Fund exceeded final budget appropriations but does not agree that it was related to budgetary controls. The non-compliance occurred because the Recreation Fund's expenditures are based solely on the amount of room tax revenue it receives. That revenue is allocated to several different entities each month on a percentage basis. Due to the ongoing COVID pandemic, in preparing the augmented budget, it was anticipated that room tax revenues would come in significantly lower than originally budgeted and, accordingly, would also decrease the expenditure allocations associated with it. Therefore, both the revenue and the expenditures were reduced. Although the room tax revenue did come in approximately 14% lower than the original budget, it also came in 5% higher than anticipated in the augmented budget. As such the City had to pay the allocations based on a percentage of that revenue, resulting in the over expenditure.

Corrective Action Plan – Where expenditures are based on percentage of revenues the City will not reduce the budget and will augment if necessary.

Thank you,

Debbie Sanchez

Debbie Sanchez
Chief Financial Officer

FINANCIAL STATEMENTS

FOR THE FISCAL YEAR ENDED JUNE 30, 2020

WITH REPORT OF

INDEPENDENT CERTIFIED PUBLIC ACCOUNTANTS

CITY OF WEST WENDOVER, NEVADA

Table of Contents

Page

FINANCIAL SECTION

Independent Auditors' Report....1

Management's Discussion and Analysis....5

Basic Financial Statements:

Government-wide Financial Statements:

Statement of Net Position....14

Statement of Activities....15

Fund Financial Statements:

Balance Sheet – Governmental Funds....16

Reconciliation of the Balance Sheets of Governmental Funds to the Statement of Net Position....17

Statement of Revenues, Expenditures, and Changes in Fund Balances – Governmental Funds....18

Reconciliation of the Statement of Revenues, Expenditures, and Changes in Fund Balances of Governmental Funds to the Statement of Activities....19

Statement of Net Position – Proprietary Funds....20

Statement of Revenues, Expenses, and Changes in Net Position – Proprietary Funds....21

Statement of Cash Flows – Proprietary Funds....22

Notes to the Financial Statements....23

Required Supplementary Information:

Schedules of Revenues, Expenditures, and Changes in Fund Balances – Budget and Actual

General Fund (Detailed)....56

Recreation Fund....59

Schedule of the Proportionate Share of the Net Pension Liability....60

Schedule of Contributions....61

CITY OF WEST WENDOVER, NEVADA

Table of Contents (Continued)

Supplementary Information

Combining and Individual Fund Statements and Schedules:
Combining Balance Sheet – Non-major Governmental Funds 64

Combining Statement of Revenues, Expenditures and Changes in
Fund Balances – Non-major Governmental Funds 65

Nonmajor Governmental Fund Schedules of Revenues, Expenditures, and
Changes in Fund Balances – Budget and Actual

Seizure Forfeiture Fund 66
Court Administrative Assessments Fund 67
Welcome Center Fund 68
Wendover Will Landmark Fund 69
Grant Fund 70
Capital Projects Fund 71
Ad Valorem Capital Projects Fund 72

Major Business-Type Funds:
Water fund:
Schedule of Revenues, Expenses – Budget and Actual 74
Sewer fund:
Schedule of Revenues, Expenses – Budget and Actual 75
Garbage / Compost Facility fund:
Schedule of Revenues, Expenses – Budget and Actual 77

Component Unit Supplementary Schedules:
Statement of Net Position 78
Schedule of Revenues, Expenses – Budget and Actual 79
Statement of Cash Flows 80

OTHER COMMUNICATIONS FROM INDEPENDENT AUDITORS:

Report on Internal Control over Financial Reporting and Compliance 83

Report on Compliance with State Fiscal Laws 85

Schedule of Fees Imposed Subject to the Provision of NRS 354.5989 87

Findings and Recommendations 89

Corrective Action Plan 91

FINANCIAL SECTION

This page intentionally left blank

HINTON BURDICK
CPAs & ADVISORS

Independent Auditors' Report

The Honorable Mayor and City Council
West Wendover, Nevada

Report on the Financial Statements

We have audited the accompanying financial statements of the governmental activities, the business-type activities, the aggregate discretely presented component units, each major fund, and the aggregate remaining fund information of City of West Wendover, Nevada as of and for the year ended June 30, 2020, and the related notes to the financial statements, which collectively comprise the City's basic financial statements as listed in the table of contents.

Management's Responsibility for the Financial Statements

Management is responsible for the preparation and fair presentation of these financial statements in accordance with accounting principles generally accepted in the United States of America; this includes the design, implementation, and maintenance of internal control relevant to the preparation and fair presentation of financial statements that are free from material misstatement, whether due to fraud or error.

Auditor's Responsibility

Our responsibility is to express opinions on these financial statements based on our audit. We conducted our audit in accordance with auditing standards generally accepted in the United States of America and the standards applicable to financial audits contained in *Government Auditing Standards*, issued by the Comptroller General of the United States. Those standards require that we plan and perform the audit to obtain reasonable assurance about whether the financial statements are free from material misstatement.

An audit involves performing procedures to obtain audit evidence about the amounts and disclosures in the financial statements. The procedures selected depend on the auditor's judgment, including the assessment of the risks of material misstatement of the financial statements, whether due to fraud or error. In making those risk assessments, the auditor considers internal control relevant to the entity's preparation and fair presentation of the financial statements in order to design audit procedures that are appropriate in the circumstances, but not for the purpose of expressing an opinion on the effectiveness of the entity's internal control. Accordingly, we express no such opinion. An audit also includes evaluating the appropriateness of accounting policies used and the reasonableness of significant accounting estimates made by management, as well as evaluating the overall presentation of the financial statements.

We believe that the audit evidence we have obtained is sufficient and appropriate to provide a basis for our audit opinions.

Opinions

In our opinion, the financial statements referred to above present fairly, in all material respects, the respective financial position of the governmental activities, the business-type activities, the aggregate discretely presented component units, each major fund, and the aggregate remaining fund information of the City of West Wendover, Nevada, as of June 30, 2020, and the respective changes in financial position, and, where applicable, cash flows thereof for the year then ended in accordance with accounting principles generally accepted in the United States of America.

Other Matters

Required Supplementary Information

Accounting principles generally accepted in the United States of America require that the management's discussion and analysis, budgetary comparison information, the schedule of proportionate share of the net pension liability and the schedule of contributions, as listed in the table of contents, be presented to supplement the basic financial statements. Such information, although not a part of the basic financial statements, is required by the Governmental Accounting Standards Board, who considers it to be an essential part of financial reporting for placing the basic financial statements in an appropriate operational, economic, or historical context. We have applied certain limited procedures to the required supplementary information in accordance with auditing standards generally accepted in the United States of America, which consisted of inquiries of management about the methods of preparing the information and comparing the information for consistency with management's responses to our inquiries, the basic financial statements, and other knowledge we obtained during our audit of the basic financial statements. We do not express an opinion or provide any assurance on the information because the limited procedures do not provide us with sufficient evidence to express an opinion or provide any assurance.

Other Information

Our audit was conducted for the purpose of forming opinions on the financial statements that collectively comprise the City of West Wendover, Nevada's basic financial statements. The major fund budgetary comparison schedules, the combining and individual non-major fund budgetary schedules and component unit supplementary schedules, as listed in the table of contents, are presented for purposes of additional analysis and are not a required part of the basic financial statements.

The major fund budgetary comparison schedules, the combining and individual non-major fund budgetary schedules, and the component unit supplementary schedules as listed in the table of contents, are the responsibility of management and were derived from and relate directly to the underlying accounting and other records used to prepare the basic financial statements. Such information has been subjected to the auditing procedures applied in the audit of the basic financial statements and certain additional procedures, including comparing and reconciling such information directly to the underlying accounting and other records used to prepare the basic financial statements or to the basic financial statements themselves, and other additional procedures in accordance with auditing standards generally accepted in the United States of America. In our opinion, the major fund budgetary comparison schedules, the combining and individual non-major fund budgetary schedules, and the component unit supplementary schedules as listed in the table of contents, are fairly stated in all material respects in relation to the basic financial statements as a whole.

Other Reporting Required by *Government Auditing Standards*

In accordance with *Government Auditing Standards*, we have also issued our report dated November 2, 2020, on our consideration of the City of West Wendover, Nevada's internal control over financial reporting and on our tests of its compliance with certain provisions of laws, regulations, contracts, and grant agreements and other matters. The purpose of that report is to describe the scope of our testing of internal control over financial reporting and compliance and the results of that testing, and not to provide an opinion on internal control over financial reporting or on compliance. That report is an integral part of an audit performed in accordance with *Government Auditing Standards* in considering City of West Wendover, Nevada's internal control over financial reporting and compliance.



HintonBurdick, PLLC
St. George, Utah
November 2, 2020

This page intentionally left blank

CITY OF WEST WENDOVER, NEVADA
MANAGEMENT'S DISCUSSION AND ANALYSIS

As management of the City of West Wendover (City), we offer readers of the City's financial statements this narrative overview and analysis of the financial activities of the City for the fiscal year ended June 30, 2020. Please read it in conjunction with the accompanying basic financial statements.

FINANCIAL HIGHLIGHTS

- Total assets plus deferred outflows exceed total liabilities plus deferred inflows (net position) by $26.9 million at the close of the fiscal year.
- Total net position increased by $65 thousand from the prior year.
- Governmental activities net position increased by $307 thousand. Business-type net position decreased by $242 thousand.
- Total revenues from all governmental sources were $9.1 million and the total cost of all City programs were $8.8 million.
- The General Fund revenues exceeded expenditures, excluding transfers, by $1.4 million.
- At the end of the current fiscal year, unassigned fund balance for the General Fund was $2,479,837, or 42% of total General Fund expenditures, excluding transfers.

USING THIS ANNUAL REPORT

This annual report consists of a series of financial statements. The three components of the financial statements are: (1) Government-wide financial statements which include the Statement of Net Position and the Statement of Activities. These statements provide information about the activities of the City as a whole. (2) Fund financial statements tell how these services were financed in the short term as well as what remains for future spending. Fund financial statements also report the City's operations in more detail than the government-wide statements by providing information about the City's most significant funds. (3) Notes to the financial statements.

Reporting the City as a Whole

The Statement of Net Position and the Statement of Activities (Government-wide)

A frequently asked question regarding the City's financial health is whether the year's activities contributed positively to the overall financial well-being. The Statement of Net Position and the Statement of Activities report information about the City as a whole and about its activities in a way that helps answer this question. These statements include *all* assets and liabilities using the *accrual basis of accounting*, which is similar to the accounting used by most private-sector companies. All of the current year's revenues and expenses are taken into account regardless of when cash is received or paid.

These two statements report the City's net position and changes in them. Net position, the difference between assets and liabilities, are one way to measure the City's financial health, or financial position. Over time, increases or decreases in net position are an indicator of whether the financial health is improving or deteriorating. However, it is important to consider other non-financial factors such as changes in the City's property tax base or condition of the City's roads to accurately assess the overall health of the City.

The Statement of Net Position and the Statement of Activities, present information about the following:

- Government activities – All of the City's basic services are considered to be governmental activities, including general government, judicial, public safety, community development, health and sanitation, culture and recreation, community support, and interest on long-term debt. Consolidated tax, room tax, ad valorem tax, county gaming tax, franchise tax, right of way tolls, motor vehicle tax, and unrestricted investment earnings finance these activities.

- Proprietary activities/Business type activities – The City charges a fee to customers to cover all or most of the cost of the services provided. The City's water, sewer, and garbage / compost systems are reported in this category.

Reporting the City's Most Significant Funds

Fund Financial Statements

The fund financial statements provide detailed information about the most significant funds—not the City as a whole. Some funds are required to be established by State law and others are established by City resolution or by bond covenants. However, management establishes many other funds which aid in the management of money for particular purposes or meet legal responsibilities associated with the usage of certain taxes, grants, and other money. The City's two kinds of funds, *governmental* and *proprietary*, use different accounting approaches as explained below.

- *Governmental funds* – Most of the City's basic services are reported in governmental funds. Governmental funds focus on how resources flow in and out with the balances remaining at year-end that are available for spending. These funds are reported using an accounting method called the *modified accrual* accounting method, which measures cash and all other *financial* assets that can readily be converted to cash. The governmental fund statements provide a detailed *short-term view* of the City's general government operations and the basic services it provides. Government fund information shows whether there are more or fewer financial resources that can be spent in the near future to finance the City's programs. We describe the relationship (or differences) between governmental *activities* (reported in the Statement of Net Position and the Statement of Activities) and governmental *funds* in a reconciliation included with the Basic Financial Statements.

- *Proprietary funds* – The City maintains enterprise and internal service funds under this category. Enterprise funds are used to account for functions presented in the business-type section of the government-wide financial statements. Internal service funds are used to account for the financing of goods or services provided by one department or agency to other departments or agencies of the government.

Notes to the Financial Statements

Notes to the financial statements are included to provide information that is crucial to the full and complete understanding of the data provided in the financial statements.

GOVERNMENT-WIDE FINANCIAL ANALYSIS

Net position may serve over time as a useful indicator of the City's financial position. The City's combined assets exceed liabilities by $26.9 million as of June 30, 2020 as shown in the following condensed statement of net position. The City has chosen to account for its water, sewer, and garbage/compost operations in enterprise funds which are shown as Business Activities.

City of West Wendover, Nevada
Statement of Net Position

	Governmental activities		Business-type activities		Combined Total	
Assets	06/30/20	06/30/19	06/30/20	06/30/19	06/30/20	06/30/19
Current and other assets	$ 3,883,394	$ 3,150,117	$ 6,360,349	$ 6,200,377	$ 10,243,743	$ 9,350,494
Net capital assets	19,423,684	20,271,396	17,817,362	18,290,392	37,241,046	38,561,788
Total assets	23,307,078	23,421,513	24,177,711	24,490,769	47,484,789	47,912,282
Deferred outflows	1,152,807	1,256,937	241,216	255,908	1,394,023	1,512,845
Liabilities						
Current liabilities	489,749	566,897	107,171	139,589	596,920	706,486
Long-term liabilities outstanding	11,987,315	13,014,448	7,973,746	8,151,132	19,961,061	21,165,580
Total liabilities	12,477,064	13,581,345	8,080,917	8,290,721	20,557,981	21,872,066
Deferred inflows	1,195,268	617,032	250,101	125,625	1,445,369	742,657
Net position:						
Net investment in capital assets	14,030,140	14,520,364	13,325,707	13,776,382	27,355,847	28,296,746
Restricted	182,444	187,326	607,722	952,807	790,166	1,140,133
Unrestricted	(3,425,031)	(4,227,617)	2,154,480	1,601,142	(1,270,551)	(2,626,475)
Total net position	$ 10,787,553	$ 10,480,073	$ 16,087,909	$ 16,330,331	$ 26,875,462	$ 26,810,404

Governmental Activities

The cost of all Governmental activities this year was $8,766,124. As shown on the statement of Changes in Net Position on the following page, $1,163,954 of this cost was paid for by those who directly benefited from the programs; $513,732 was subsidized by grants received from other governmental organizations for both capital and operating activities. Overall governmental program revenues, including intergovernmental aid and fees for services were $1,677,686. General taxes, asset sales, and other general revenues totaled $7,395,918.

The City's programs include: general government, judicial, public safety, public works, community development, health and sanitation, culture and recreation, community support, and interest on long-term debt. Each programs' total cost is presented below.

City of West Wendover, Nevada
Changes in Net Position

	Governmental activities		Business-type activities		Combined Total	
	06/30/20	06/30/19	06/30/20	06/30/19	06/30/20	06/30/19
Revenues:						
Program revenues:						
Charges for services	$ 1,163,954	$ 635,428	$ 3,752,329	$ 3,961,674	$ 4,916,283	$ 4,597,102
Operating grants	320,332	442,032	-	-	320,332	442,032
Capital grants	193,400	188,289	15,664	118,910	209,064	307,199
General revenues:						
Consolidated taxes	3,011,445	2,844,516	-	-	3,011,445	2,844,516
Room taxes	1,599,360	2,242,802	-	-	1,599,360	2,242,802
Ad valorem taxes	1,606,885	1,657,933	-	-	1,606,885	1,657,933
County gaming taxes	385,985	429,278	-	-	385,985	429,278
Franchise taxes	372,852	397,860	-	-	372,852	397,860
Right of way toll	295,900	316,050	-	-	295,900	316,050
Motor vehicle taxes	104,460	107,775	-	-	104,460	107,775
Other taxes	5,411	-	-	-	5,411	-
Investment earnings	11,619	13,580	84,103	131,644	95,722	145,224
Gain on sale of capital assets	-	543,253	-	-	-	543,253
Miscellaneous revenues	2,001	6,684	31,493	25,375	33,494	32,059
Total revenues	9,073,604	9,825,480	3,883,589	4,237,603	12,957,193	14,063,083
Expenses:						
General government	1,599,406	1,708,015	-	-	1,599,406	1,708,015
Judicial	382,670	393,422	-	-	382,670	393,422
Public safety	3,361,832	3,192,139	-	-	3,361,832	3,192,139
Public works	564,862	555,232	-	-	564,862	555,232
Community development	438,666	404,510	-	-	438,666	404,510
Health and sanitation	180,751	142,372	-	-	180,751	142,372
Culture and recreation	1,724,156	2,384,928	-	-	1,724,156	2,384,928
Community support	303,713	332,535	-	-	303,713	332,535
Interest on long term debt	210,068	229,140	-	-	210,068	229,140
Water	-	-	1,544,529	1,414,509	1,544,529	1,414,509
Sewer	-	-	1,548,631	1,625,719	1,548,631	1,625,719
Garbage/Compost	-	-	1,032,851	1,012,056	1,032,851	1,012,056
Total expenses	8,766,124	9,342,293	4,126,011	4,052,284	12,892,135	13,394,577
Increase in net position before transfers	307,480	483,187	(242,422)	185,319	65,058	668,506
Transfers	-	-	-	-	-	-
Increase in net position	307,480	483,187	(242,422)	185,319	65,058	668,506
Net position, beginning	10,480,073	9,996,886	16,330,331	16,145,012	26,810,404	26,141,898
Restatement adjustment	-	-	-	-	-	-
Net position, ending	$ 10,787,553	$ 10,480,073	$ 16,087,909	$ 16,330,331	$ 26,875,462	$ 26,810,404

Total resources available during the year to finance governmental operations were $19,553,677 consisting of Net Position at July 1, 2019 of $10.5 million, program revenues of $1.7 million and General Revenue of $7.4 million. Total cost of Governmental Activities during the year were $8.8 million; thus, Governmental Net Position increased by $307,480 to $10.8 million.

The following graphs compare program expenses to program revenues and provide a breakdown of revenues by source for all government activities. The charts below are derived from the Statement of Activities on page 15.

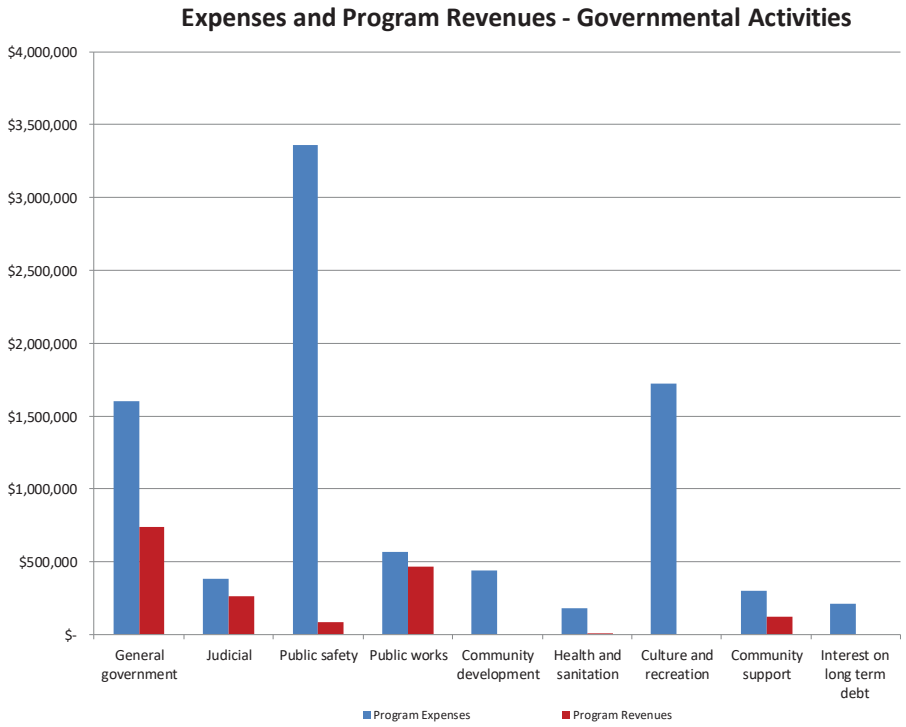

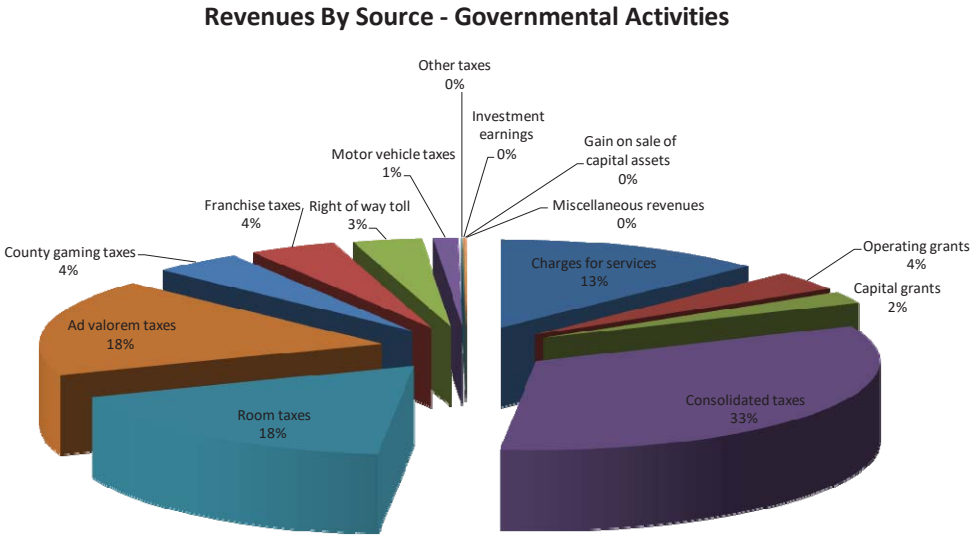

Business Type Activities

Net position of the Business Type activities at June 30, 2020, as reflected in the Statement of Net Position was $16.1 million. The cost of providing all Proprietary (Business Type) activities this year was $4.1 million. As shown in the Statement of Activities, the amounts paid by users of the system were $3.8 million and $15,664 was subsidized by capital grants and contributions. Unrestricted investment earnings totaled $84,103; other revenue totaled $31,493, thus, net position decreased by $242,422.

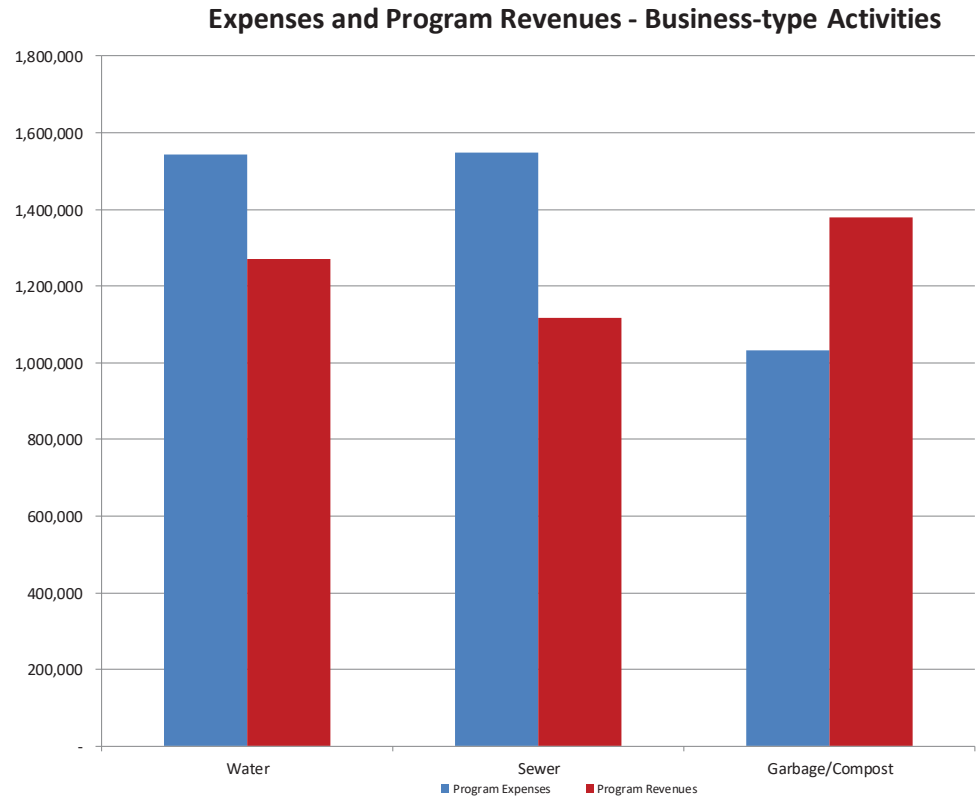

Financial Analysis of the Government's Funds

As noted earlier, the City of West Wendover uses fund accounting to ensure and demonstrate compliance with finance-related legal requirements.

Governmental funds: The focus of the City of West Wendover's governmental funds is to provide information on near-term inflows, outflows, and balances of spendable resources. Such information is useful in assessing the City of West Wendover's financing requirements. In particular, unassigned fund balance may serve as a useful measure of a government's net resources available for spending at the end of the fiscal year.

As of the end of the current fiscal year, the City of West Wendover's governmental funds reported combined ending fund balances of $3,280,468, an increase of $649,118 in comparison with the prior year. 76% of the total fund balance or $2,479,837 constitutes unassigned fund balance, which is available for new spending at the government's discretion.

The general fund is the chief operating fund of the City of West Wendover. At the end of the current fiscal year, unassigned fund balance in the general fund was $2,479,837, and total fund balance is $2,707,192. As a measure of liquidity, it may be useful to compare both unassigned fund balance and total fund balance to total fund expenditures. Total unassigned fund balance represents 42% of total general fund expenditures. During the year, the City of West Wendover's general fund balance was budgeted to increase by $451,090. The total fund balance increased by $805,931 due primarily to increases in consolidated tax revenue and marijuana related revenues.

The recreation fund has a fund balance of $118,114, all of which is restricted for culture and recreation appropriation. Change in fund balance for the year was ($16,449). Revenues were down in this fund due to the effect of the COVID 19 pandemic on room taxes.

Proprietary funds

The City of West Wendover's proprietary funds provide the same type of information found in the government-wide financial statements, but in more detail.

At June 30, 2020, unrestricted net position amounted to $1,118,900 for the water fund. The change in net position for fiscal year 2020 was ($179,568) and the change in net position for fiscal year 2019 was $107,184. The decrease in the change in net position was due to a slight decrease in operating revenues and an increase in operating expenses.

At June 30, 2020, unrestricted net position amounted to ($233,953) for the sewer fund. The change in net position for fiscal year 2020 was ($426,630) and the change in net position for fiscal year 2019 was ($345,895). The decrease in the change in net position was due to a slight decrease in operating revenues and a decrease in impact fee revenues as compared with the previous year.

At June 30, 2020, unrestricted net position amounted to $1,269,533 for the garbage/compost fund. The change in net position for fiscal year 2020 was $363,776 and the change in net position for fiscal year 2019 was $424,030. The decrease in the change in net position was due to a slight decrease in operating revenues and an increase in operating expenses.

General Fund Budgetary Highlights

Actual expenditures for the General Fund at year-end were $543,302 less than the final budget. The favorable budget to actual variance in appropriations was principally due to overall savings in services and supplies for all departments. Actual revenues were less than the final budget by $182,027.

CAPITAL ASSET AND DEBT ADMINISTRATION

Capital Assets

The capital assets of the City are those assets that are used in performance of City functions including infrastructure assets. Capital Assets include equipment, buildings, land, park facilities and roads. At the end of fiscal year 2020, net capital assets of the government activities totaled $19.4 million and the net capital assets of the business-type activities totaled $17.8 million. Depreciation on governmental-type capital assets is recognized in the Government-Wide financial statements. (See note 6 to the financial statements.)

Long Term Liabilities

At year-end, the City had $12 million in governmental type long term liabilities, and $8 million in proprietary long term liabilities. The liabilities amounts to $4,438 per capita (4,498 – 2013 population US Census Bureau Website 2013). The City's net decrease in total long term liabilities was $1.2 million. (See note 7 and 18 to the financial statements for detailed descriptions.)

NEXT YEAR'S BUDGET AND ECONOMIC FACTORS

In considering the City Budget for fiscal year 2020-2021, the City Council and management continue to remain cautious as to the growth of revenues and expenditures especially room tax revenue which has been impacted the most by COVID-19.

The City is in the third year of its Collective Bargaining Agreement with the Police Officers Association, effective July 1, 2018 thru June 30, 2021, which provides for an annual, fiscal-year Merit Bonus of up to two percent (2%) in wages, based on performance evaluations. A two year labor agreement was negotiated with Local 4041, effective July 1, 2019 thru June 30, 2021. It provides for an annual, fiscal-year increase in wages of two percent (2%) for all classifications, with the exception of dispatchers and the lead dispatcher. Dispatcher and lead dispatcher classifications shall have an annual fiscal-year increase of four percent (4%). Renegotiations will begin in early 2021 for fiscal years beginning July 1, 2021.

Projects that are reflected in the City Budget for the fiscal year 2020-2021 are as follows:

- As a carry-over from last year, the City of West Wendover anticipates the issuance of new debt during the 2020-2021fiscal year. This new debt will be issued in the form of two interim construction loans, to start the downtown development and to build a new Fire Station facility. When construction is complete, the construction loans will be retired with Rural Development loans from USDA which have been obligated by USDA-RD.
- The acquisition of BLM land for the downtown development is estimated to cost $840K while Phase I of the City Downtown Development Area infrastructure is estimated to cost $3.415M. The fire station facility is estimated to cost $7.206M.
- The City is refurbishing a fire truck budgeted at $250K.
- The City will continue ongoing Street Rehabilitation and Storm Drainage Improvement Projects

Debt Service

- The City paid off a 1999, $1.5M, USDA Compost Revenue Bond in August, 2019
- The City paid off a 1999, $540K, USDA Compost Revenue Bond in August, 2019
- The City also refinanced the 1998, $3.058M, Water Revenue Bond. The refinance gave the City a net present value cash flow savings of $656,760.

CONTACTING THE CITY'S FINANCIAL MANAGEMENT

This financial report is designed to provide our citizens, taxpayers, customers, investors and creditors with a general overview of the City's finances and to show the City's accountability for the money it receives. If you have questions about this report or need additional financial information, please contact the City's Chief Financial Officer at the City of West Wendover, 1111 N. Gene L. Jones Way, West Wendover, Nevada 89883 or visit us online at http://www.westwendovercity.com

BASIC FINANCIAL STATEMENTS

CITY OF WEST WENDOVER, NEVADA
Statement of Net Position
For the Year Ended June 30, 2020

	Primary Government			Component Unit
	Governmental Activities	Business-type Activities	Total	Johnson Springs
Assets				
Cash and temporary investments	$ 2,562,139	$ 3,083,294	$ 5,645,433	$ 109,213
Accounts receivable, net	895,702	458,712	1,354,414	64,273
Due from component unit	-	2,158,147	2,158,147	-
Inventory	24,565	43,155	67,720	11,291
Prepaid items	87,048	9,319	96,367	-
Restricted cash	313,940	607,722	921,662	-
Capital assets not being depreciated:				
Land	1,467,431	111,000	1,578,431	18,000
Construction in progress	187,320	-	187,320	-
Capital assets, net of accumulated depreciation:				
Buildings, net	7,636,435	3,340,849	10,977,284	2,227,481
Improvements other than buildings, net	9,902,405	2,359,273	12,261,678	232,884
Machinery and equipment, net	230,093	1,060,864	1,290,957	159,590
Utility systems	-	10,945,376	10,945,376	3,293,508
Total assets	23,307,078	24,177,711	47,484,789	6,116,240
Deferred Outflows of Resources				
Deferred outflows related to pensions	1,152,807	241,216	1,394,023	23,700
Liabilities				
Accounts payable	240,085	55,341	295,426	19,910
Accrued interest payable	20,745	46,954	67,699	-
Accrued expenses	187,609	-	187,609	1,687
Due to primary government	-	-	-	2,158,147
Unearned revenue	41,310	-	41,310	-
Deposits payable	-	4,876	4,876	-
Noncurrent liabilities				
Due within one year	529,918	528,397	1,058,315	5,718
Due in more than one year	5,180,106	6,131,873	11,311,979	-
Net pension liability	6,277,291	1,313,476	7,590,767	129,051
Total liabilities	12,477,064	8,080,917	20,557,981	2,314,513
Deferred Inflows of Resources				
Deferred inflows related to pensions	1,195,268	250,101	1,445,369	24,573
Net Position				
Net investment in capital assets	14,030,140	13,325,707	27,355,847	3,773,316
Restricted for:				
Judicial	64,330	-	64,330	-
Culture and recreation	118,114	-	118,114	-
Debt service	-	607,722	607,722	-
Unrestricted	(3,425,031)	2,154,480	(1,270,551)	27,538
Total net position	$ 10,787,553	$ 16,087,909	$ 26,875,462	$ 3,800,854

The accompanying notes are an integral part of the financial statements.

CITY OF WEST WENDOVER, NEVADA
Statement of Activities
For the Year Ended June 30, 2020

Functions/Programs	Expenses	Program Revenues: Charges for Services	Program Revenues: Operating Grants & Contributions	Program Revenues: Capital Grants & Contributions	Net (Expense) Revenue and Changes in Net Position: Governmental Activities	Net (Expense) Revenue and Changes in Net Position: Business-Type Activities	Net (Expense) Revenue and Changes in Net Position: Total	Component Unit: Johnson Springs
Governmental:								
General government	$ 1,599,406	$ 740,468	$ -	$ -	$ (858,938)	$ -	$ (858,938)	$ -
Judicial	382,670	261,223	-	-	(121,447)	-	(121,447)	-
Public safety	3,361,832	36,147	48,482	-	(3,277,203)	-	(3,277,203)	-
Public works	564,862	119,416	155,000	193,400	(97,046)	-	(97,046)	-
Community development	438,666	-	-	-	(438,666)	-	(438,666)	-
Health and sanitation	180,751	3,329	-	-	(177,422)	-	(177,422)	-
Culture and recreation	1,724,156	-	-	-	(1,724,156)	-	(1,724,156)	-
Community support	303,713	3,371	116,850	-	(183,492)	-	(183,492)	-
Interest on long term debt	210,068	-	-	-	(210,068)	-	(210,068)	-
Total governmental activities	8,766,124	1,163,954	320,332	193,400	(7,088,438)	-	(7,088,438)	-
Business-type:								
Water	1,544,529	1,262,586	-	8,973	-	(272,970)	(272,970)	-
Sewer	1,548,631	1,111,355	-	6,691	-	(430,585)	(430,585)	-
Garbage/Compost	1,032,851	1,378,388	-	-	-	345,537	345,537	-
Total business-type activities	4,126,011	3,752,329	-	15,664	-	(358,018)	(358,018)	-
Total primary government	$ 12,892,135	$ 4,916,283	$ 320,332	$ 209,064				
Component Unit:								
Johnson Springs	$ 885,981	$ 580,555	$ -	$ -				(305,426)
		General Revenues:						
		Consolidated taxes			3,011,445	-	3,011,445	-
		Room taxes			1,599,360	-	1,599,360	-
		Ad valorem taxes			1,606,885	-	1,606,885	-
		County gaming taxes			385,985	-	385,985	-
		Franchise taxes			372,852	-	372,852	-
		Right of way toll			295,900	-	295,900	-
		Motor vehicle taxes			104,460	-	104,460	-
		Other taxes			5,411	-	5,411	-
		Investment earnings			11,619	84,103	95,722	25,241
		Miscellaneous revenues			2,001	31,493	33,494	14,927
		Total general revenues and transfers			7,395,918	115,596	7,478,020	40,168
		Change in net position			307,480	(242,422)	65,058	(265,258)
		Net position - beginning			10,480,073	16,330,331	26,810,404	4,066,112
		Net position - ending			$ 10,787,553	$ 16,087,909	$ 26,875,462	$ 3,800,854

The accompanying notes are an integral part of the financial statements.

CITY OF WEST WENDOVER, NEVADA
Balance Sheet
Governmental Funds
June 30, 2020

	General Fund	Recreation Fund	Nonmajor Governmental Funds	Total Governmental Funds
Assets				
Cash and temporary investments	$ 2,115,512	$ 114,645	$ 154,028	$ 2,384,185
Accounts receivable, net	61,906	108,422	-	170,328
Due from other funds	114,440	-	-	114,440
Due from other governments	681,515	-	43,660	725,175
Inventory	23,780	-	785	24,565
Prepaid and other items	21,404	-	-	21,404
Restricted cash	440	-	313,500	313,940
Total assets	3,018,997	223,067	$ 511,973	$ 3,754,037
Liabilities				
Accounts payable	$ 82,886	$ 104,953	$ 22,371	$ 210,210
Accrued liabilities	187,609	-	-	187,609
Due to other funds	-	-	34,440	34,440
Unearned revenue	41,310	-	-	41,310
Total liabilities	311,805	104,953	56,811	473,569
Fund Balances				
Nonspendable	45,184	-	785	45,969
Restricted	440	118,114	442,348	560,902
Committed	181,731	-	12,029	193,760
Unassigned	2,479,837	-	-	2,479,837
Total fund balances	2,707,192	118,114	455,162	3,280,468
Total liabilities and fund balances	$ 3,018,997	$ 223,067	$ 511,973	$ 3,754,037

The accompanying notes are an integral part of the financial statements.

CITY OF WEST WENDOVER, NEVADA
Reconciliation of the Balance Sheets of Governmental Funds
To the Statement of Net Position
For the Year Ended June 30, 2020

Total fund balances - governmental funds		$ 3,280,468
Amounts reported for governmental activities in the statement of net position are different because:		
Capital assets used in governmental activities are not financial resources and therefore are not reported in the funds.		
Governmental capital assets	$ 30,123,276	
Accumulated depreciation	(10,699,592)	
		19,423,684
Long-term receivables in the governmental activities are not reported in the funds.		199
Long-term liabilities are not due and payable in the current period and therefore are not reported in the funds.		
Net pension liabilities	$ (6,277,291)	
Bonds payable	(5,393,544)	
Compensated absences	(316,480)	
Interest payable	(20,745)	
		(12,008,060)
The internal service fund is used by management to charge the cost of insurance to individual funds. The assets and liabilities of the internal service funds are included in the governmental activities in the statement of net position.		133,723
Deferred outflows and inflows of resources related to pensions are applicable to future reporting periods and, therefore, are not reported in the funds.		
Deferred outflows	$ 1,152,807	
Deferred inflows	(1,195,268)	
		(42,461)
Total net position - governmental activities		$ 10,787,553

The accompanying notes are an integral part of the financial statements.

CITY OF WEST WENDOVER, NEVADA
Statement of Revenues, Expenditures and Changes in Fund Balances
Governmental Funds
For the Year Ended June 30, 2020

	General Fund	Recreation Fund	Nonmajor Governmental Funds	Total Governmental Funds
Revenues				
Taxes	$ 1,484,154	$ 1,599,360	$ 48,160	$ 3,131,674
Licenses and permits	1,478,158	-	-	1,478,158
Intergovernmental	3,968,585	-	141,290	4,109,875
Charges for services	58,880	-	9,679	68,559
Fines and forfeits	72,274	-	-	72,274
Miscellaneous revenues	208,458	-	9,504	217,962
Total revenues	7,270,509	1,599,360	208,633	9,078,502
Expenditures				
Current				
General government	1,085,707	-	-	1,085,707
Judicial	381,099	-	7,409	388,508
Public safety	3,255,998	-	34,440	3,290,438
Public works	586,244	-	-	586,244
Community development	286,076	-	-	286,076
Health	160,560	-	-	160,560
Culture and recreation	14,755	1,615,809	-	1,630,564
Community support	48,890	-	259,520	308,410
Capital outlay	-	-	121,505	121,505
Debt service	56,249	-	515,123	571,372
Total expenditures	5,875,578	1,615,809	937,997	8,429,384
Excess (deficiency) of revenues over (under) expenditures	1,394,931	(16,449)	(729,364)	649,118
Other Financing Sources (Uses)				
Transfers in	-	-	638,575	638,575
Transfers out	(589,000)	-	(49,575)	(638,575)
Total other financing sources and uses	(589,000)	-	589,000	-
Net change in fund balances	805,931	(16,449)	(140,364)	649,118
Fund balances, beginning of year	1,901,261	134,563	595,526	2,631,350
Fund balances, end of year	$ 2,707,192	$ 118,114	$ 455,162	$ 3,280,468

The accompanying notes are an integral part of the financial statements.

CITY OF WEST WENDOVER, NEVADA
Reconciliation of the Statement of Revenues,
Expenditures, and Changes in Fund Balances of Governmental Funds
To the Statement of Activities
For the Year Ended June 30, 2020

Amounts reported for governmental activities in the statement of activities are different because:		
Net change in fund balances - total governmental funds		$ 649,118
Governmental funds report capital outlays as expenditures. However, in the statement of activities, the costs of those assets is allocated over their estimated useful lives and reported as depreciation expense. This is the amount by which capital outlay exceeded depreciation in the current period.		
Capital outlay	$ 195,779	
Depreciation expense	(1,005,711)	(809,932)
Governmental funds report the gross proceeds from the sale of capital assets as revenue. However, in the statement of activities, the gain/(loss) on the sale of capital assets is reported net of its net book value.		(37,780)
Payments on long term receivables recorded as revenue in the governmental funds are reported as a reduction of receivables in the statement of net position.		(4,898)
Repayment of bond principal is an expenditure in the governmental funds, but the repayment reduces long-term liabilities in the statement of net position.		358,239
Accrued interest for long-term debt is not reported as an expenditure for the current period while it is recorded in the statement of activities. The adjustment reflects the change in interest payable		3,065
Pension contributions are reported as expenditures in the governmental funds when made. However, they are reported as deferred outflows of resources in the Statement of Net Position because the net pension liability is measured a year before the City's report date. Pension expense, which is the change in the net pension liability adjusted for changes in deferred outflows and inflows of resources related to pension, is reported in the Statement of Activities.		
Pension contributions	$ 496,825	
Pension expense	(516,322)	(19,497)
Compensated absences expenses reported in the statement of activities do not require the use of current financial resources and therefore are not reported as expenditures in the governmental funds. This adjustment reflects the change in compensated absences payable.		6,025
The internal service fund is used by management to charge the cost of insurance to the various funds. The net revenue (loss) of the internal service fund is reported with governmental activities.		163,140
Change in net position of governmental activities		$ 307,480

The accompanying notes are an integral part of the financial statements.

CITY OF WEST WENDOVER, NEVADA
Statement of Net Position
Proprietary Funds
For the Year Ended June 30, 2020

	Water Fund	Sewer Fund	Garbage/ Compost Fund	Total Proprietary Funds	Health Insurance Internal Service Fund
Assets					
Current assets					
Cash and investments	$ 1,314,682	$ 160,106	$ 1,608,506	$ 3,083,294	$ 177,954
Accounts receivable, net	175,836	147,351	135,525	458,712	-
Inventory	38,962	4,193	-	43,155	-
Prepaid expenses	1,976	6,105	1,238	9,319	65,644
Total current assets	1,531,456	317,755	1,745,269	3,594,480	243,598
Noncurrent assets					
Restricted cash	508,731	98,991	-	607,722	-
Due from component unit	2,158,147	-	-	2,158,147	-
Capital assets:					
Land	111,000	-	-	111,000	-
Buildings	1,277,649	1,166,887	1,535,458	3,979,994	-
Improvements other than buildings	974,603	76,600	5,164,633	6,215,836	-
Machinery and equipment	910,503	1,323,852	2,402,111	4,636,466	-
Utility system	2,225,345	15,820,916	-	18,046,261	-
Less accumulated depreciation	(2,443,654)	(7,199,355)	(5,529,186)	(15,172,195)	-
Total noncurrent assets	5,722,324	11,287,891	3,573,016	20,583,231	-
Total assets	7,253,780	11,605,646	5,318,285	24,177,711	243,598
Deferred Outflows of Resources					
Deferred outflows related to pensions	70,137	89,291	81,788	241,216	-
Liabilities					
Current liabilities					
Accounts payable	10,073	40,311	4,957	55,341	29,875
Accrued interest payable	24,806	10,518	11,630	46,954	-
Due to other funds	-	-	-	-	80,000
Compensated absences	10,721	11,384	10,781	32,886	-
Customer deposits	4,876	-	-	4,876	-
Current portion of noncurrent liabilities	180,483	120,497	194,531	495,511	-
Total current liabilities	230,959	182,710	221,899	635,568	109,875
Noncurrent liabilities:					
Capital leases payable	-	-	436,847	436,847	-
Net pension liability	381,914	486,207	445,355	1,313,476	-
Bonds payable	2,967,670	2,484,691	242,665	5,695,026	-
Total noncurrent liabilities	3,349,584	2,970,898	1,124,867	7,445,349	-
Total liabilities	3,580,543	3,153,608	1,346,766	8,080,917	109,875
Deferred Inflows of Resources					
Deferred inflows related to pensions	72,721	92,579	84,801	250,101	-
Net Position					
Net investment in capital assets	2,043,022	8,583,712	2,698,973	13,325,707	-
Restricted for debt service	508,731	98,991	-	607,722	-
Unrestricted	1,118,900	(233,953)	1,269,533	2,154,480	133,723
Total net position	$ 3,670,653	$ 8,448,750	$ 3,968,506	$ 16,087,909	$ 133,723

The accompanying notes are an integral part of the financial statements.

CITY OF WEST WENDOVER, NEVADA
Statement of Revenues, Expenses, and Changes in Net Position
Proprietary Funds
For the Year Ended June 30, 2020

	Water Fund	Sewer Fund	Garbage/ Compost Fund	Total Proprietary Funds	Health Insurance Internal Service Fund
Operating revenues					
Charges for services	$ 1,262,586	$ 1,111,355	$ 1,378,388	$ 3,752,329	$ 926,009
Operating expenses					
Water purchases	508,677	-	-	508,677	-
Salaries and wages	137,238	285,967	253,578	676,783	-
Employee benefits	274,927	160,130	142,435	577,492	762,869
Services and supplies	399,073	465,622	213,201	1,077,896	-
Capital outlay	(17)	12,142	9,632	21,757	-
Depreciation and amortization	142,684	550,495	381,259	1,074,438	-
Total operating expenses	1,462,582	1,474,356	1,000,105	3,937,043	762,869
Operating income (loss)	(199,996)	(363,001)	378,283	(184,714)	163,140
Nonoperating revenues (expenses)					
Interest income	75,950	1,338	6,815	84,103	-
Impact fees	8,973	6,691	-	15,664	-
Miscellaneous income	6,868	2,617	11,424	20,909	-
Contributions from component unit for debt payments	10,584	-	-	10,584	-
Interest expense	(81,947)	(74,275)	(32,746)	(188,968)	-
Total nonoperating revenues (expenses)	20,428	(63,629)	(14,507)	(57,708)	-
Income before contributions and transfers	(179,568)	(426,630)	363,776	(242,422)	163,140
Change in net position	(179,568)	(426,630)	363,776	(242,422)	163,140
Total net position, beginning	3,850,221	8,875,380	3,604,730	16,330,331	(29,417)
Total net position, end of year	$ 3,670,653	$ 8,448,750	$ 3,968,506	$ 16,087,909	$ 133,723

The accompanying notes are an integral part of the financial statements.

CITY OF WEST WENDOVER, NEVADA
Statement of Cash Flows
Proprietary Funds
June 30, 2020

	Water Fund	Sewer Fund	Garbage/ Compost Fund	Total Proprietary Funds	Health Insurance Internal Service Fund
Cash Flows From Operating Activities:					
Cash received from customers, service fees	$ 1,225,403	$ 1,093,245	$ 1,388,127	$ 3,706,775	$ 941,614
Cash paid to suppliers	(883,995)	(443,270)	(238,024)	(1,565,289)	(808,513)
Cash paid to employees	(394,207)	(430,968)	(381,875)	(1,207,050)	-
Net cash flows from operating activities	(52,799)	219,007	768,228	934,436	133,101
Cash Flows From Noncapital Financing Activities:					
Net interfund receipts/(payments)	-	-	-	-	(80,000)
Net component unit receipts/(payments)	120,597	-	-	120,597	-
Cash received from miscellaneous sources	6,868	2,856	11,774	21,498	-
Net cash flows from noncapital financing activities	127,465	2,856	11,774	142,095	(80,000)
Cash Flows From Capital and Related Financing Activities:					
Impact fees	8,973	6,691	-	15,664	-
Proceeds from long term debt	2,173,729	-	464,990	2,638,719	-
Principal paid on capital debt	(2,320,251)	(116,735)	(287,175)	(2,724,161)	-
Interest paid on capital debt	(133,035)	(74,481)	(36,197)	(243,713)	-
Acquisition and construction of capital assets	(60,498)	(17,994)	(523,504)	(601,996)	-
Net cash flows from capital and related financing activities	(331,082)	(202,519)	(381,886)	(915,487)	-
Cash Flows From Investing Activities:					
Interest income	75,950	1,338	6,815	84,103	-
Net change in cash and cash equivalents	(180,466)	20,682	404,931	245,147	53,101
Cash and investments, including restricted cash, beginning of year as restated	2,003,879	238,415	1,203,575	3,445,869	124,853
Cash and Cash Equivalents, Including Restricted Cash , End of Year	$ 1,823,413	$ 259,097	$ 1,608,506	$ 3,691,016	$ 177,954
Reconciliation of operating income to net cash flows from operating activities:					
Operating income (loss)	$ (199,996)	$ (363,001)	$ 378,283	$ (184,714)	$ 163,140
Adjustments to reconcile net income (loss) to net cash from operating activities					
Depreciation/amortization	142,684	550,495	381,259	1,074,438	-
Pension expense	45,316	52,725	45,567	143,608	-
Employer pension contributions	(30,227)	(38,482)	(35,248)	(103,957)	-
Changes in operating assets and liabilities:					
(Increase) decrease in receivables	(37,967)	(18,110)	9,739	(46,338)	15,605
(Increase) decrease in inventory	20,159	(72)	-	20,087	-
(Increase) decrease in prepaid expenses	-	1,600	(187)	1,413	(141)
Increase (decrease) in accounts payable	3,579	32,966	(15,004)	21,541	(45,503)
Increase (decrease) in due from deposits	784	-	-	784	-
Increase (decrease) in compensated absences	2,869	886	3,819	7,574	-
Net cash flows from operating activities	$ (52,799)	$ 219,007	$ 768,228	$ 934,436	$ 133,101

The accompanying notes are an integral part of the financial statements.

NOTE 1. Summary of Significant Accounting Policies

Description of government-wide financial statements

The government-wide financial statements (i.e., the statement of net position and the statement of activities) report information on all of the nonfiduciary activities of the primary government and its component units. All fiduciary activities are reported only in the fund financial statements. *Governmental activities*, which normally are supported by taxes, intergovernmental revenues, and other nonexchange transactions, are reported separately from *business-type activities*, which rely to a significant extent on fees and charges to external customers for support. Likewise, the *primary government* is reported separately from certain legally separate *component units* for which the primary government is financially accountable.

Reporting Entity

The City of West Wendover (government) is a municipal corporation governed by an elected mayor and five-member governing council (council). The accompanying financial statements present the government and its component units, entities for which the government is considered to be financially accountable. Blended component units are, in substance, part of the primary government's operations, even though they are legally separate entities. Thus, blended component units are appropriately presented as funds of the primary government. Each discretely presented component unit is reported in a separate column in the government-wide financial statements to emphasize that it is legally separate from the government.

Discretely presented component units - The Johnson Springs Water System Enterprise Fund (Johnson Springs) was formed by a settlement agreement between the City of West Wendover, Nevada and the City of Wendover, Utah to replace Administrative Authority upon its dissolution (dissolved on December 31, 2008). Johnson Springs has no board. The net assets of the Administrative Authority were transferred to Johnson Springs on January 1, 2009, including the debt of the Administrative Authority that is in the name of the City. It is a separate enterprise fund and is considered a component unit due to the City's responsibility to perform all management, maintenance and accounting duties for the fund.

Basis of presentation – government-wide financial statements

While separate government-wide and fund financial statements are presented, they are interrelated. The governmental activities column incorporates data from governmental funds and internal service funds, while business-type activities incorporate data from the government's enterprise funds. Separate financial statements are provided for governmental funds, proprietary funds, and fiduciary funds, even though the latter are excluded from the government-wide financial statements.

As discussed earlier, the city has one discretely presented component units, Johnson Springs, which is considered a major component unit and is shown in separate columns in the government-wide financial statements.

As a general rule, the effect of interfund activity has been eliminated from the government-wide financial statements.

NOTE 1. Summary of Significant Accounting Policies, Continued

Basis of presentation – fund financial statements

The fund financial statements provide information about the government's funds, including its fiduciary funds and blended component units if any. Separate statements for each fund category—governmental, proprietary, and fiduciary—are presented. The emphasis of fund financial statements is on major governmental and enterprise funds, each displayed in a separate column. All remaining governmental and enterprise funds are aggregated and reported as nonmajor funds. Major individual governmental and enterprise funds are reported as separate columns in the fund financial statements.

The government reports the following major governmental funds:

The **General Fund** is the government's primary operating fund. It accounts for all financial resources of the general government, except those accounted for in another fund.

The **Recreation Fund** is used to account for the City's share of room tax proceeds and the distribution of those funds to the recreation district.

The government reports the following major enterprise funds:

The **Water Fund** accounts for the provision of water services to the residents of the City. All activities necessary to provide such services are accounted for in this fund, including, but not limited to, administration, operation, maintenance, financing and related debt service and billing and collection.

The **Sewer Fund** accounts for the provision of sewer services to the residents of the City. All activities necessary to provide such services are accounted for in this fund, including, but not limited to, administration, operation, maintenance, financing and related debt service and billing and collection.

The **Garbage/Compost Fund** is used to account for the provision of sanitation services to residents of the City. All activities necessary to provide such services are accounted for in this fund, including, but not limited to, administration, operation, maintenance, financing and related debt service and billing and collection.

Additionally, the City reports the following fund types:

Health Insurance Internal Service Fund – Internal Service Funds are used to account for the financing of goods and services provided by one department or agency to other departments or agencies of the government and to other government units, on a cost reimbursement basis.

NOTE 1. Summary of Significant Accounting Policies, Continued

During the course of operations the government has activity between funds for various purposes. Any residual balances outstanding at year end are reported as due from/to other funds and advances to/from other funds. While these balances are reported in fund financial statements, certain eliminations are made in the preparation of the government-wide financial statements. Balances between the funds included in governmental activities (i.e., the governmental funds) are eliminated so that only the net amount is included as internal balances in the governmental activities column. Similarly, balances between the funds included in business-type activities (i.e., the enterprise funds) are eliminated so that only the net amount is included as internal balances in the business-type activities column.

Further, certain activity occurs during the year involving transfers of resources between funds. In fund financial statements these amounts are reported at gross amounts as transfers in/out. While reported in fund financial statements, certain eliminations are made in the preparation of the government-wide financial statements. Transfers between the funds included in governmental activities are eliminated so that only the net amount is included as transfers in the governmental activities column. Similarly, balances between the funds included in business-type activities are eliminated so that only the net amount is included as internal balances in the business-type activities column.

Measurement focus and basis of accounting

The accounting and financial reporting treatment is determined by the applicable measurement focus and basis of accounting. Measurement focus indicates the type of resources being measured such *as current financial resources* or *economic resources*. The basis of accounting indicates the timing of transactions or events for recognition in the financial statements.

The government-wide financial statements are reported using the *economic resources measurement* focus and the *accrual basis of accounting*. Revenues are recorded when earned and expenses are recorded when a liability is incurred, regardless of the timing of related cash flows. Property taxes are recognized as revenues in the year for which they are levied. Grants and similar items are recognized as revenue as soon as all eligibility requirements imposed by the provider have been met.

The governmental fund financial statements are reported using the *current financial resources measurement* focus and the *modified accrual basis of accounting*. Revenues are recognized as soon as they are both measurable and available. Revenues are considered to be available when they are collectible within the current period or soon enough thereafter to pay liabilities of the current period. For this purpose, the government considers revenues to be available if they are collected within 60 days of the end of the current fiscal period. Expenditures generally are recorded when a liability is incurred, as under accrual accounting. However, debt service expenditures, as well as expenditures related to compensated absences, and claims and judgments, are recorded only when payment is due. General capital asset acquisitions are reported as expenditures in governmental funds. Issuance of long-term debt and acquisitions under capital leases are reported as other financing sources.

NOTE 1. Summary of Significant Accounting Policies, Continued

Property taxes, franchise taxes, licenses, and interest associated with the current fiscal period are all considered to be susceptible to accrual and so have been recognized as revenues of the current fiscal period. Entitlements are recorded as revenues when all eligibility requirements are met, including any time requirements, and the amount is received during the period or within the availability period for this revenue source (within 60 days of yearend). Expenditure-driven grants are recognized as revenue when the qualifying expenditures have been incurred and all other eligibility requirements have been met, and the amount is received during the period or within the availability period for this revenue source (within 60 days of yearend). All other revenue items are considered to be measurable and available only when cash is received by the government.

The proprietary funds are reported using the *economic resources measurement* focus and the *accrual basis of accounting*.

Assets, liabilities, deferred outflows/inflows of resources, and net position/fund balance

Cash and cash equivalents

The government's cash and cash equivalents are considered to be cash on hand, demand deposits, and short-term investments with original maturities of three months or less from the date of acquisition.

Investments

Investments for the government are reported at fair value (generally based on quoted market prices). The City of West Wendover invests in the State of Nevada Local Government Investment Pool, which has regulatory oversight from the Board of Finance for the State of Nevada.

State statues authorize the City to invest in obligations of the U.S. Treasury; certain farm loan bonds; certain securities issued by Nevada local governments and other state and local governments; certain repurchase agreements; certain bankers acceptances; certain commercial paper; and certain negotiable certificates of deposits and money market mutual funds, as well as the State of Nevada Local Government Investment Pool.

Inventories and prepaid items

Inventories for the general and proprietary funds are valued at cost using the first-in/first-out (FIFO) method and consist of expendable office supplies, pipe, fittings and miscellaneous automobile parts. The cost of such inventories is recorded as expenditures/expenses when consumed rather than when purchased.

For all other funds, the City of West Wendover charges consumable supplies against appropriations at the time of purchase. Any inventories of such supplies at June 30 are not material to the individual funds and are not recognized in the financial statements.

NOTE 1. Summary of Significant Accounting Policies, Continued

Certain payments to vendors reflect costs applicable to future accounting periods and are recorded as prepaid items in both the government-wide and fund financial statements. The cost of prepaid items is recorded as expenditures/expenses when consumed rather than when purchased

Capital assets

Capital assets, which include property, plant, equipment, and infrastructure assets (e.g. roads, bridges, sidewalks, and similar items), are reported in the applicable governmental or business-type activities column in the government-wide financial statements. Capital assets are defined by the government as assets with an initial, individual cost of more than $5,000 and an estimated useful life in excess of two years.

The City has elected not to record infrastructure assets prior to July 1, 2003 as allowed by Governmental Accounting Statement number 34 for phase 3 governments.

As the government constructs or acquires additional capital assets each period, including infrastructure assets, they are capitalized and reported at historical cost. The reported value excludes normal maintenance and repairs which are essentially amounts spent in relation to capital assets that do not increase the capacity or efficiency of the item or increase its estimated useful life. Donated capital assets are recorded at their estimated acquisition value at the date of donation.

Interest incurred during the construction phase of capital assets of enterprise funds is included as part of the capitalized value of the assets constructed. The amount of interest capitalized depends on the specific circumstances.

Land and construction in progress are not depreciated. The other property, plant, equipment, and infrastructure of the primary government are depreciated using the straight line method over the following estimated useful lives:

Building	35 to 50 years
Improvements other than buildings	20 to 30 years
Machinery, equipment, and vehicles	3 to 10 years
Utility systems	10 to 50 years

Deferred outflows/inflows of resources

In addition to assets, the statement of financial position will sometimes report a separate section for deferred outflows of resources. This separate financial statement element, *deferred outflows of resources*, represents a consumption of net position that applies to a future period(s) and so will not be recognized as an outflow of resources (expense/ expenditure) until then. The City has one type of item that qualifies for reporting for reporting in this category which is pension related items reported on the government-wide financial statements. See footnote 17 for more information.

NOTE 1. Summary of Significant Accounting Policies, Continued

In addition to liabilities, the statement of financial position will sometimes report a separate section for deferred inflows of resources. This separate financial statement element, *deferred inflows of resources*, represents an acquisition of net position that applies to a future period(s) and so will not be recognized as an inflow of resources (revenue) until that time. The City has one type of item that qualifies for reporting in this category which is pension related items reported on the government-wide financial statements. See footnote 17 for more information. The governmental funds report unearned revenues from two sources: advance payments for business licenses and advance payments for gaming licenses. These amounts are deferred and recognized as an inflow of resources in the period that the amounts are earned.

Net position flow assumption

Sometimes the government will fund outlays for a particular purpose from both restricted (e.g., restricted bond or grant proceeds) and unrestricted resources. In order to calculate the amounts to report as restricted – net position and unrestricted – net position in the government-wide and proprietary fund financial statements, a flow assumption must be made about the order in which the resources are considered to be applied. It is the government's policy to consider restricted – net position to have been depleted before unrestricted – net position is applied.

Fund balance flow assumptions

Sometimes the government will fund outlays for a particular purpose from both restricted and unrestricted resources (the total of committed, assigned, and unassigned fund balance). In order to calculate the amounts to report as restricted, committed, assigned, and unassigned fund balance in the governmental fund financial statements a flow assumption must be made about the order in which the resources are considered to be applied. It is the government's policy to consider restricted fund balance to have been depleted before using any of the components of unrestricted fund balance. Further, when the components of unrestricted fund balance can be used for the same purpose, committed fund balance is depleted first, followed by assigned fund balance. Unassigned fund balance is applied last.

Fund balance policies

Fund balance of governmental funds is reported in various categories based on the nature of any limitations requiring the use of resources for specific purposes. The government itself can establish limitations on the use of resources through either a commitment (committed fund balance) or an assignment (assigned fund balance).

The committed fund balance classification includes amounts that can be used only for the specific purposes determined by a formal action of the government's highest level of decision-making authority. The governing council is the highest level of decision-making authority for the government that can, by adoption of an ordinance prior to the end of the fiscal year, commit fund balance. Once adopted, the limitation imposed by the ordinance remains in place until a similar action is taken (the adoption of another ordinance) to remove or revise the limitation.

NOTE 1. Summary of Significant Accounting Policies, Continued

Amounts in the assigned fund balance classification are intended to be used by the government for specific purposes but do not meet the criteria to be classified as committed. The city council (council) has by resolution authorized the Mayor, City Manager, and Chief Financial Officer to assign fund balance. The council may also assign fund balance as it does when appropriating fund balance to cover a gap between estimated revenue and appropriations in the subsequent year's appropriated budget. Unlike commitments, assignments generally only exist temporarily. In other words, an additional action does not normally have to be taken for the removal of an assignment. Conversely, as discussed above, an additional action is essential to either remove or revise a commitment.

Revenues and Expenditures/Expenses

Program revenues

Amounts reported as program revenues include 1) charges to customers or applicants who purchase, use, or directly benefit from goods, services, or privileges provided by a given function or segment and 2) grants and contributions (including special assessments) that are restricted to meeting the operational or capital requirements of a particular function or segment. All taxes, including those dedicated for specific purposes, and other internally dedicated resources are reported as general revenues rather than as program revenues.

Property taxes

All real property within the City of West Wendover is assigned a parcel number by the Elko County Assessor in accordance with state law, with each parcel being subject to physical reappraisal every five years. A factoring system is used to adjust the appraised value during the years between physical appraisals. The property and its improvements are assessed at 35% of "taxable value" as defined by statute. The amount of tax levied is developed by multiplying the assessed value by the tax rate applicable to the area in which the property is located. The maximum tax rate was established in the State Constitution at $5 per $100 of assessed valuation; however, as a result of legislative action, the tax rate was further limited to $3.64 per $100 as assessed valuation, except in cases of severe financial emergency as defined by NRS 354.705. Taxes on real property are a lien on the property and attach on July 1 of the year for which the taxes are levied.

Taxes may be paid in four installments, the first installment is due on the third Monday of August and the remaining three installments are payable on the first Monday in October, January and March to the Treasurer of Elko County in which the City of West Wendover is located. Penalties are assessed if a taxpayer fails to pay an installment within ten days of the installment due date. After a two year waiting period, if the taxes remain unpaid, a tax deed is issued conveying the property to the County with a lien for back taxes and accumulated charges. Redemption may be made by the owner or such persons as described by statute by paying all back taxes and accumulated penalties, interest and costs before sale.

Taxes on personal property are collected currently. Personal property declarations are mailed out annually by the County and the tax is computed using percentages of taxable values established by the Department of Taxation and the tax rates described above.

NOTE 1. Summary of Significant Accounting Policies, Continued

Compensated absences

Vacation and Sick-leave

The city's policy permits employees to accumulate earned but unused vacation benefits, which are eligible for payment upon separation from government service. The liability for such leave is reported as incurred in the government-wide and proprietary fund financial statements. A liability for those amounts is recorded in the governmental funds only if the liability has matured as a result of employee resignations or retirements.

Per City Policy and Collective Bargaining Agreements, employees earn (accrue) sick leave benefits which they are eligible to receive upon separation of service at a determined percentage based upon total years of service and based upon the required notice of separation.

Proprietary funds operating and non-operating revenues and expenses

Proprietary funds distinguish *operating* revenues and expenses from *non-operating* items. Operating revenues and expenses generally result from providing services and producing and delivering goods in connection with a proprietary fund's principal ongoing operations. The principal operating revenues of the water fund, sewer fund, and garbage/compost facility fund are charges to customers for sales and services. Operating expenses for enterprise funds include the cost of sales and services, administrative expenses, and depreciation on capital assets. All revenues and expenses not meeting this definition are reported as non-operating revenues and expenses.

Use of Estimates

The preparation of financial statements in conformity with accounting principles generally accepted in the United States of America requires management to make estimates and assumptions that affect the reported amounts of assets and liabilities and disclosure of contingent assets and liabilities at the date of the financial statements and the reported amounts of revenues and expenditures/expenses during the reporting period. Actual results could differ from those estimates.

Pensions

For purposes of measuring the net pension liability, deferred outflows of resources and deferred inflows of resources related to pensions, and pension expense, information about the pension plan's fiduciary net position of the Public Employees' Retirement System of Nevada (PERS) and additions to/deductions from the plan's fiduciary net position have been determined on the same basis as they are reported by PERS. For this purpose, benefit payments (including refunds of employee contributions) are recognized when due and payable in accordance with the benefit terms. Investments are reported at fair value.

NOTE 1. Summary of Significant Accounting Policies, Continued

Comparative Data

Comparative data shown for the prior year has been extracted from the 2018-2019 financial statements and reclassified where necessary. It has been provided to add comparability but is not considered full disclosure of transactions for 2018-2019. Such information can only be obtained by referring to the audited financial statements for that year.

NOTE 2. Reconciliation of Government-Wide and Fund Financial Statements

The governmental fund balance sheet includes reconciliation between total governmental fund balances and net position of governmental activities as reported in the government-wide statement of net position. This difference primarily results from the long-term economic focus of the statement of net position versus the current financial resources focus of the governmental fund balance sheets. The details of these differences are reported in the reconciliation on as listed in the table of contents.

The governmental fund statement of revenues, expenditures, and changes in fund balance includes a reconciliation between net changes in fund balances-total governmental funds and changes in net position of governmental activities as reported in the government-wide statement of activities. These differences are the result of converting from the current resources measurement focus and modified accrual basis for governmental fund statements to the economic resources measurement focus and full accrual basis used for government-wide statements. The details of these differences are reported in the reconciliation as listed in the table of contents.

NOTE 3. Stewardship, Compliance, and Accountability

Budgets and Budgetary Accounting

The City adheres to the Local Government Budget Act incorporated in Section 354 of the Nevada Revised Statutes. The provision of the Act included the following major procedures to establish the budgetary data which is reflected in these financial statements.

a. On or before April 15, the City Council files a tentative budget with the Nevada Department of Taxation for all funds.

b. Public budget hearings on the tentative budget are held on the third Tuesday of May.

c. On or before June 1, at a public hearing, the City Council indicates changes, if any, to be made to the tentative budget must then be forwarded to the Nevada Department of Taxation for the final review and approval.

d. Formal budgetary integration in the financial records of all funds is employed to enhance management control during the year.

e. Budgets for all funds are adopted on a basis consistent with generally accepted accounting principles (GAAP). All appropriations lapse at year end.

f. Budget amounts within funds, and between funds, may be transferred if amounts do not exceed the original budget. Such transfers must be approved by the budget officer and/or City Council, depending on established criteria. Budget augmentations in excess of original budgetary amounts may only be made with prior approval of the City Council, following a scheduled and noticed public hearing for those funds which have ad valorem taxes allocated as a source of revenue. For all other funds, the City Council must approve the budget augmentation with a majority vote and adopt a resolution providing therefore.

g. The above dates may be adjusted as necessary during legislative years.

h. The budget amounts reflected in the financial statements have been amended from the original amounts in accordance with the approved procedures.

i. In accordance with state statute, actual expenditures may not exceed budgeted appropriations of the various governmental functions (excluding the debt services functions) in the General Fund and total expenditures in other governmental funds. Per NRS 354.626, expenditures over budgeted appropriations are allowed for bond repayments, medium term obligation repayments and long-term contracts expressly authorized by law.

NOTE 4. Cash and Investments

A reconciliation of cash deposits and investments to the government-wide statement of net position as follows:

	Primary Government	Component Unit
Deposits:		
Cash on hand	$ 1,575	$ -
Cash in bank	5,054,608	(1,277,630)
Investments:		
Nevada local government investment pool	1,510,913	1,386,843
Total deposits and investments	$ 6,567,095	$ 109,213
Cash and cash equivalents	$ 5,645,433	$ 109,213
Restricted cash	921,662	-
	$ 6,567,095	$ 109,213

Deposits

Custodial Credit Risk

For deposits this is the risk that in the event of a bank failure, the government's deposit may not be returned. The City does not have a formal policy for custodial credit risk. As of June 30, 2020, $0 of the primary government and component unit's combined bank balance of $3,796,753 was exposed to custodial credit risk because it was either fully insured by FDIC insurance or collateralized by a pledging financial institution.

Investments

The Nevada State Treasurer's Office operates the Local Government Investment Pool (LGIP). The LGIP is an external investment pool operated by the Nevada Public Treasurer.

The LGIP is not registered with the SEC as an investment company. Deposits in the LGIP are not insured or otherwise guaranteed by the State of Nevada, and participants share proportionally in any realized gain or losses on investments.

The provisions of State Law (NRS 355.170) govern the investment of public funds as noted in Footnote 1.

NOTE 4. Cash and Investments, Continued

As of June 30, 2020 the government had the following investments:

Investment Type	Primary Government Fair Value	Component Unit Fair Value	Rating (1)	Weighted Average Maturity (2)
Nevada Local Government Pooled Investment Fund	$ 1,510,913	$ 1,386,843	N/A	130
Total Fair Value	$ 1,510,913	$ 1,386,843		

(1) Ratings are provided where applicable to indicate associated Credit Risk. N/A indicates not applicable.

(2) Interest Rate Risk is estimated using the weighted average days to maturity.

The City categorizes its fair value measurements within the fair value hierarchy established by generally accepted accounting principles. The hierarchy is based on the valuation inputs used to measure the fair value of the asset. Level 1 inputs are quoted prices in active markets for identical assets; Level 2 inputs are significant other observable inputs; Level 3 inputs are significant unobservable inputs.

The City has the following recurring fair value measurements as of June 30, 2020:

- Nevada Local Government's Investment Pool (LGIP):

	Primary Government	Component Unit
Level 1 inputs	$ 376,368	$ 345,463
Level 2 inputs	1,134,545	1,041,380
Total LGIP investment	$ 1,510,913	$ 1,386,843

Interest Rate Risk

Interest rate risk is the risk that changes in interest rates will adversely affect the fair value of an investment. The City's policy for managing its exposure to fair value loss arising from increasing interest rates is to comply with the provisions of State law (NRS 355.170).

Credit Risk

Credit risk is the risk that an issuer or other counterparty to an investment will not fulfill its obligations. The primary government and component unit's policy for reducing its exposure to credit risk is to limit its investments to the Nevada Local Government Investment Pool and to comply with State Law (NRS 355.170). The Nevada Local Government Investment Pool is unrated.

Concentration of Credit Risk

The Primary Government and the Component Unit place no limit on the amount the Primary Government or the Component Unit may invest in any one issue.

NOTE 4. Cash and Investments, Continued

Cash Restricted for Special Uses

The primary government and the component unit maintain restricted cash to comply with various legal and contractual requirements. Amounts restricted are as follows at June 30, 2020:

Restricted cash footnote

Medium Term Sales Tax Revenue Bond Reserves	$	313,500
Waste Water Treatment Plant Revenue Bond Reserves		98,991
Water Revenue Bonds, Series 2015 Bond Reserves		15,120
Water Rev Bonds Series 2015 - Asset Replacement		114,536
AB198 Capital Replacement Projects Fund		379,075
Unutilized Regional Transportation Commission Funds		440
Total restricted cash - primary government	$	921,662

NOTE 5. Receivables / Due from other Governments

Receivables in the governmental funds consist principally of room and franchise taxes due various businesses. Amounts due from other governments consist primarily of taxes due from the State of Nevada and grant revenues due from various granting agencies. All receivables and amounts due from other governments are considered by management to be fully collectible and therefore, no allowance for doubtful accounts is necessary.

Receivables in the proprietary funds represent service billings to customers and are shown net of an allowance for doubtful accounts. The allowance for doubtful accounts is estimated based on professional judgement and historical information. The allowances for doubtful accounts at June 30, 2020 were as follows:

Water Fund	$	-
Sewer Fund		-
Garbage/Compost Fund		-
Johnson Springs		-
	$	-

NOTE 6. Capital Assets

Governmental capital asset activity for the year ended June 30, 2020 was as follows:

Governmental Activities:	Balance 6/30/19	Additions	Deletions	Balance 6/30/20
Capital assets, not being depreciated:				
Land	$ 1,467,431	$ -	$ -	$ 1,467,431
Construction in progress	64,815	122,505	-	187,320
Total capital assets, not being depreciated	1,532,246	122,505	-	1,654,751
Capital assets, being depreciated:				
Buildings	11,271,605	-	(112,035)	11,159,570
Other improvements	14,321,856	-	(6,500)	14,315,356
Machinery and equipment	3,724,319	73,274	(803,994)	2,993,599
Total capital assets, being depreciated	29,317,780	73,274	(922,529)	28,468,525
Less accumulated depreciation for:				
Buildings	(3,323,177)	(274,808)	74,850	(3,523,135)
Other improvements	(3,892,518)	(526,915)	6,482	(4,412,951)
Machinery and equipment	(3,362,935)	(203,988)	803,417	(2,763,506)
Total accumulated depreciation	(10,578,630)	(1,005,711)	884,749	(10,699,592)
Total capital assets, being depreciated, net	18,739,150	(932,437)	(37,780)	17,768,933
Governmental activities capital assets, net	$ 20,271,396	$ (809,932)	$ (37,780)	$ 19,423,684

Depreciation expense was charged to the functions/programs of the City as follows:

Governmental Activities:	
General government	$ 561,622
Judicial	6,690
Public safety	159,285
Public works	1,581
Health and sanitation	22,803
Culture and recreation	94,862
Community support	1,194
Streets and highways	157,674
Total depreciation expense - governmental activities	$ 1,005,711

NOTE 6. Capital Assets, Continued

Business-type capital asset activity for the year ended June 30, 2020 was as follows:

Business-Type Activities:	Balance 6/30/19	Additions	Deletions	Balance 6/30/20
Capital assets not being depreciated:				
Land	$ 111,000	$ -	$ -	$ 111,000
Total capital assets, not being depreciated	111,000	-	-	111,000
Capital assets being depreciated:				
Buildings	3,979,994	-	-	3,979,994
Other improvements	6,207,454	8,382	-	6,215,836
Machinery and equipment	4,453,176	582,938	(399,648)	4,636,466
Utility systems	18,035,585	10,676	-	18,046,261
Total capital assets, being depreciated	32,676,209	601,996	(399,648)	32,878,557
Less accumulated depreciation for:				
Buildings	(539,646)	(99,499)	-	(639,145)
Other improvements	(3,634,941)	(221,622)	-	(3,856,563)
Machinery and equipment	(3,759,800)	(214,862)	399,060	(3,575,602)
Utility systems	(6,562,430)	(538,455)	-	(7,100,885)
Total accumulated depreciation	(14,496,817)	(1,074,438)	399,060	(15,172,195)
Total capital assets, being depreciated, net	18,179,392	(472,442)	(588)	17,706,362
Business-type activities capital asset, net	$ 18,290,392	$ (472,442)	$ (588)	$ 17,817,362

Depreciation expense was charged to the functions/programs of the City as follows:

Business-Type Activities:	
Water Fund	$ 142,684
Sewer Fund	550,495
Combined Garbage / Compost Facility Fund	381,259
Total depreciation expense - business-type activities	$ 1,074,438

NOTE 6. Capital Assets, Continued

Component unit capital asset activity for the year ended June 30, 2020 was as follows:

Component Unit - Johnson Springs	Balance 06/30/19	Additions	Deletions	Balance 06/30/20
Capital assets not being depreciated:				
Land	$ 18,000	$ -	$ -	$ 18,000
Total capital assets, not being depreciated	18,000	-	-	18,000
Capital assets being depreciated:				
Buildings	6,836,936	-	-	6,836,936
Other improvements	411,632	-	-	411,632
Machinery and equipment	571,254	-	-	571,254
Utility system	5,305,132	11,065	-	5,316,197
Total capital assets, being depreciated	13,124,954	11,065	-	13,136,019
Less accumulated depreciation for:				
Buildings	(4,391,923)	(217,532)	-	(4,609,455)
Other improvements	(159,335)	(19,413)	-	(178,748)
Machinery and equipment	(389,051)	(22,613)	-	(411,664)
Water utility system	(1,889,660)	(133,029)	-	(2,022,689)
Total accumulated depreciation	(6,829,969)	(392,587)	-	(7,222,556)
Total capital assets, being depreciated, net	6,294,985	(381,522)	-	5,913,463
Johnson Springs component unit fund activities capital assets, net	$ 6,312,985	$ (381,522)	$ -	$ 5,931,463

NOTE 7. Long-Term Liabilities

The following is a summary of long-term liabilities for the year ended June 30, 2020:

Long-Term Debt	Date of Issue	Interest Rate	Orriginal Amount of Issue	June 30, 2019	Additions	Retirements	June 30, 2020	Current Portion
Governmental Activities								
Direct Placement Bonds Payable:								
Medium Term Sales Tax Revenue Bond, Seriers 2009 (City Hall)	8/18/2009	4.38%	5,225,000	$ 4,184,783	$ -	$ (133,239)	$ 4,051,544	$ 138,918
General Obligation Medium-Term Bonds, Series 2015	7/14/2015	2.26%	2,200,000	1,567,000	-	(225,000)	1,342,000	233,000
Total direct placement bonds payable				5,751,783	-	(358,239)	5,393,544	371,918
Total Bonds Payable				5,751,783	-	(358,239)	5,393,544	371,918
Other Liabilities								
Compensated absences				322,505	208,694	(214,719)	316,480	158,000
Net pension liability				6,940,160	-	(662,869)	6,277,291	-
Total governmental long-term liabilities				$ 13,014,448	$ 208,694	$ (1,235,827)	$ 11,987,315	$ 529,918

For governmental activities, compensated absences and net position liabilities are generally liquidated through the General Fund.

NOTE 7. Long-Term Liabilities, continued

Long-Term Debt	Date of Issue	Interest Rate	Orriginal Amount of Issue	June 30, 2019	Additions	Retirements	June 30, 2020	Current Portion
Business-Type Activities								
Public Offerings Bonds:								
Sewer/Compost Revenue Bonds Series 1999B	8/18/1999	4.50%	1,500,000	$ 102,764	$ -	$ (102,764)	$ -	$ -
Sewer/Compost Revenue Bonds Series 1999A	8/18/1999	4.50%	540,000	36,995	-	(36,995)	-	-
Waste Water Treatment Plant Revenue Bond	6/1/2012	2.75%	2,637,000	2,334,256	-	(45,735)	2,288,521	46,497
Total business-type public offering bonds payable				2,474,015	-	(185,494)	2,288,521	46,497
Direct Placement Bonds Payable:								
1998 Water Revenue Bonds	11/17/1998	4.75%	3,058,300	2,198,814	-	(2,198,814)	-	-
General Obligation Limited Tax Water Bonds, Series 2019	8/15/2019	2.16%	2,173,729	-	2,173,729	(38,000)	2,135,729	95,069
General Obligation Limited Tax Medium-Term, Series 2014	6/17/2017	2.43%	2,100,000	1,163,000	-	(213,000)	950,000	222,000
Water Revenue Bonds, Series 2015	10/8/2015	2.63%	747,000	708,192	-	(12,437)	695,755	11,413
Total business-type direct placement bonds payable				4,070,006	2,173,729	(2,462,251)	3,781,484	328,482
Total business-type long-term debt				6,544,021	2,173,729	(2,647,745)	6,070,005	374,979
Capital leases payable:								
2019 Hook Lift - Compost/Garbage Lease	9/19/2019	2.36%	464,990	-	464,990	(44,574)	420,416	89,628
2018 Caterpillar Wheel Loader Compost Lease	1/18/2018	4.20%	231,738	168,806	-	(31,843)	136,963	30,904
Total Capital Lease Payable				168,806	464,990	(76,417)	557,379	120,532
Other Liabilities								
Net pension liability				1,412,993	-	(99,517)	1,313,476	-
Compensated absences				25,313	24,424	(16,851)	32,886	32,886
Total business-type long-term liabilities				$ 8,151,133	$ 2,663,143	$ (2,840,530)	$ 7,973,746	$ 528,397
Component Unit								
Johnson Springs								
Other Liabilities								
Net pension liability				167,949	-	(38,898)	129,051	-
Compensated absences				11,155	1,988	(7,425)	5,718	5,718
Total Component Unit long-term liabilities				$ 179,104	$ 1,988	$ (46,323)	$ 134,769	$ 5,718

NOTE 7. Long-Term Liabilities, Continued

Revenue Bonds

The City has pledged future net revenues from the City's Municipal Water System to repay $2,173,729 and $747,000 in water revenue bonds issued in November 1998 and 2019, respectively, with interest rates of 2.16% and 2.63%, respectively. Proceeds from the bonds provided financing to pay for the cost to acquire, improve, construct, equip, operate, and maintain a water project for the City. The bonds are payable solely from net revenues from the Municipal Water System and are payable through 2039 and 2056.

The City has pledged future net revenues from the City's Sewer Facility to repay $2,637,000 in sewer revenue bonds issued in June 2012 with an interest rate of 2.75%. Proceeds from the bonds provided financing for the construction of a new sewer facility. The bonds are payable solely from future net revenues from the Sewer Facility and are payable through 2052.

The following schedules reflect debt service requirements to maturity of the City's debt as of June 30, 2020:

	Governmental Activities		Business-Type Activities			
Year Ending	Direct Placement Bonds		Public Offering Bonds		Direct Placement Bonds	
June 30,	Principle	Interest	Principle	Interest	Principle	Interest
2021	$ 371,918	$ 202,278	$ 46,497	$ 62,467	$ 328,482	$ 86,792
2022	386,119	190,721	47,789	61,175	341,527	79,014
2023	401,597	178,695	49,117	59,847	354,960	70,942
2024	356,938	167,280	50,323	58,641	367,403	62,596
2025	371,414	155,228	51,880	57,084	116,992	53,858
2026-2030	1,157,270	625,637	281,689	263,131	625,112	229,140
2031-2034	1,153,723	387,561	323,075	221,746	697,803	156,451
2035-2040	1,194,565	110,953	370,458	174,362	565,765	77,571
2041-2045	-	-	425,004	121,039	107,389	43,811
2046-2050	-	-	487,450	57,370	122,406	28,794
2051-2055	-	-	155,239	3,693	139,522	11,678
2056-2060	-	-	-	-	14,123	136
Total Principal	$ 5,393,544	$ 2,018,353	$ 2,288,521	$ 1,140,555	$ 3,781,484	$ 900,783

The City's outstanding bonds from direct placements of $9,175,028 are secured with pledged revenues. The outstanding issues from direct placement contain provisions that in an event of default, the bonds become taxable and the interest rate on the bonds increases.

The City has no unused lines of credit at June 30, 2020.

NOTE 8. Capital Leases Payable

The government has entered into two lease agreements, which are considered capital leases in accordance with Financial Accounting Standard Board ASC 840-30-25. The two leases are shown in the combined garbage/compost fund. The total amount of equipment capitalized under the leases is $696,378 for the business-type activities. Amortization on capital leases is included in depreciation expense.

The following is an annual schedule of future minimum lease payments with interest rates ranging from 2.36% to 4.2% under the capital leases, together with the present value of the net minimum lease payments:

Year Ending June 30	Business-type Activities
2021	$ 141,432
2022	140,135
2023	192,776
2024	99,024
2025	22,512
Total remaining minimum lease payments	595,879
Less amount representing interest	(38,500)
Present value of net remaining minimum lease payments	$ 557,379

NOTE 9. Segment Information

In previous years, the component unit, Johnson Springs, issued separate revenue bonds to finance its operations. Segment information for Johnson Springs is disclosed below and also in the supplementary information. Segment information for the other proprietary funds is disclosed in the basic financial statements.

	06/30/20
Operating revenues	$ 580,555
Depreciation and amortization	(392,587)
Operating expenses	(416,204)
Operating income/(loss)	(228,236)
Nonoperating revenues and (expenses)	(37,022)
Change in net position	(265,258)
Beginning net position	4,066,112
Ending net position	3,800,854
Net working capital	(2,000,685)
Total assets	6,116,240
Total deferred outflows	23,700
Current liabilities	27,315
Due to primary government	2,158,147
Bonds and other long term debt obligations	129,051
Total deferred inflows	24,573
Net Position	
Net investment in capital assets	3,773,316
Unrestricted	27,538
Total Net Position	$ 3,800,854
Condensed Statement of Cash Flows	
Net cash flows from:	
Operating activities	$ 100,242
Noncapital financing activities	(105,670)
Capital and related financing activities	(77,671)
Investing activities	25,241
Net Increase (decrease)	$ (57,858)
Beginning cash and cash equivalents	167,071
Ending cash and cash equivalents	$ 109,213

NOTE 10. Interfund Receivables, Payables, and Transfers

As of June 30, 2020 interfund receivables and payables that resulted from various interfund transactions for the primary government were as follows:

	Due from Other Funds	Due to Other Funds
General Fund	$ 114,440	$ -
Health Insurance Internal Service Fund	-	80,000
Nonmajor funds:		
Grant Fund	-	34,440
Total	$ 114,440	$ 114,440

As of June 30, 2020, interfund receivables and payables that resulted from transactions between the primary government and the component unit were as follows:

	Due from Component Unit	Due to Primary Government
Water Fund:		
Interest receivable	$ 22,418	$ -
Debt repayment receivable	2,135,729	-
Component Unit		
Interest payable	-	22,418
Debt repayment payable	-	2,135,729
Total	$ 2,158,147	$ 2,158,147

In 1998, the City of West Wendover issued long term debt obligations to complete a water project in behalf of its constituents. The component unit, which benefited from the project, is assisting with the repayment of the revenues bonds issued in the water fund. Hence, there is an interfund balance between the water fund and the component unit, Johnson Springs as shown above.

Interfund transfers for the fiscal year ended June 30, 2020 are as follows:

	Transfers out:		
Transfer in:	General	Non-major Ad Valorem Capital Projects	Total Transfers in
Nonmajor Governmental Funds			
Court Admin Assessment Fund	$ 9,000	$ -	$ 9,000
Welcome Center Fund	110,000	-	110,000
Wendover Will Landmark Fund	20,000	-	20,000
Capital Projects Fund	450,000	49,575	499,575
Total transfers out	$ 589,000	$ 49,575	$ 638,575

NOTE 10. Interfund Receivables, Payables, and Transfers, Continued

Transfers are used to (1) move revenues from the fund that statute or budget requires to collect them to the fund that statute or budget requires to expend them and (2) use unrestricted revenues collected in the general fund to finance various programs accounted for in other funds in accordance with budgetary authorizations.

NOTE 11. Deferred Compensation Plan

The City offers its employees a deferred compensation plan created in accordance with Internal Revenue Code Section 457. The plan, available to all full-time employees at their option, permits participants until termination, retirement, death, or unforeseeable emergency.

Plan assets are held and administered by The Hartford. The plan does not meet the definition of a fiduciary fund as defined in GASB 32, and therefore, is not reported in this financial statement.

NOTE 12. Room Taxes

On October 16, 2001, Ordinance 01-20 was passed, increasing room taxes from 10% to 16%. Of this rate, 14% is allocated to the West Wendover Recreation District. Additionally, the Ordinance allows for 1% to be paid to a non-profit entity to promote tourism and recreation throughout the City of West Wendover. At June 30, 2020 this amount was held as restricted in the Recreation Fund.

NOTE 13. Commitments and Contingent Liabilities

Amounts received or receivable from grantor agencies are subject to audit and adjustment by grantor agencies, principally the federal government. Any disallowed claims, including amounts already collected may constitute a liability of the applicable funds. The amount, if any, of expenditures which may be disallowed by the grantor cannot be determined at this time although the City expects such amounts, if any, to be immaterial.

The City is party to legal proceedings which normally occur in governmental operations. City officials believe these legal proceedings are not likely to have a material adverse impact on the financial position of the City.

NOTE 14. Available Borrowing Capacity

The lawful general obligation debt limit for city governments is established by State statute not to exceed thirty percent of the total last assessed valuation of the taxable property of the City. At June 30, 2020, the general obligation debt limit and available borrowing capacity of the City of West Wendover was $43,546,411.

NOTE 15. Closure and Post-Closure Care Cost

State and Federal laws and regulations require that the City place a final cover on its landfill sites and perform certain maintenance and monitoring functions at the landfill sites for a minimum of thirty years after closure. In addition to operating expenses related to current activities of the landfill sites, an expense provision and related liability should be recognized based on the future closure and post-closure care costs that will be incurred near or after the date the landfills no longer accepts waste. GASB Statement 18 requires the recognition of these landfill closure and post-closure care costs based on the amount of the landfill used during the year. The City does not report a liability for the estimated closure and post-closure care costs because it has passed a resolution that authorizes participation in the landfill assurance program established through the Nevada Public Agency Insurance Pool as a mechanism to demonstrate financial responsibility for the closure and post-closure care costs. Because the City has, in effect, transferred its responsibility for closure and post-closure care costs to another entity through the purchase of the insurance policy, the liabilities are not reported on the City's financial statements as per GASB 18.

The estimated liability for landfill closure and post-closure care costs under GASB Statement 18 requirements is $602,089 as of June 30, 2020. The City had two cells in operation during fiscal year 2020. The Class I cell has used 100% of available capacity and a new Class I cell was constructed in fiscal year 2016 according to the 2014 Volumetric Survey. The City constructed new cells for operation since 2016, which includes Class III cell, Cell C, Cell B (once fully excavated), and Cell E to be sufficient for an additional 149 months of operation. The estimated closure and post-closure costs are based on the amount that would be paid if all equipment, facilities, and services required to close, monitor, and maintain landfill modules currently in use for all cells in operation during 2020. The City maintained an insurance policy with a face amount of $814,511 at June 30, 2020.

NOTE 16. Risk Management

The City is exposed to various risks of loss related to torts; theft of, damage to, and destruction of assets, errors and omissions; injuries to employees; and natural disasters. These risks are covered by commercial insurance purchased from independent third parties. Settled claims from these risks have not exceeded commercial insurance coverage for the past three years.

The City has chosen to establish a risk financing fund for risks associated with the employee's health insurance plan. The risk financing fund is accounted for as an internal service fund where assets are set aside for claim settlement. A premium is charged to each function which accounts for full-time employees.

Liabilities of funds are reported when it is probable that a loss has occurred and the amount of the loss can be reasonably estimated. There were no liabilities that met these criteria at June 30, 2020. Liabilities include an amount for claims that have been incurred but not reported (IBNR). Claim liabilities are calculated considering the effects of inflation, recent claim settlement trends including frequency and amount of pay-outs and other economic and social factors.

Changes in the balances of claims liabilities during the past three fiscal years are as follows:

Fiscal Year Ended June 30	Unpaid Claims Beginning of Fiscal Year	Incurred Claims	Claim Payments	Unpaid Claims End of Fiscal Year
2020	$ -	$ 418,723	$ 418,723	$ -
2019	$ -	$ 626,197	$ 626,197	$ -
2018	$ -	$ 651,673	$ 651,673	$ -

NOTE 17. Retirement and Pension Plans

Public Employees' Retirement System of Nevada (PERS)

Plan description

PERS administers a cost-sharing, multiple-employer, defined benefit public employees' retirement system which includes both Regular and Police/Fire members. The System was established by the Nevada Legislature in 1947, effective July 1, 1948. The System is administered to provide a reasonable base income to qualified employees who have been employed by a public employer and whose earnings capacities have been removed or substantially impaired by age or disability. The report is available on the website at https://www.nvpers.org/.

NOTE 17. Retirement and Pension Plans, Continued

Benefits provided

Benefits, as required by the Nevada Revised Statutes (NRS or statute), are determined by the number of years of accredited service at time of retirement and the member's highest average compensation in any 36 consecutive months with special provisions for members entering the System on or after January 1, 2010. Benefit payments to which participants or their beneficiaries may be entitled under the plan include pension benefits, disability benefits, and survivor benefits.

Monthly benefit allowances for members are computed as 2.5% of average compensation for each accredited year of service prior to July 1, 2001. For service earned on and after July 1, 2001, this multiplier is 2.67% of average compensation. For members entering the System on or after January 1, 2010, there is a 2.5% service time factor and for regular members entering the System on or after July 1, 2015, there is a 2.25% factor. The System offers several alternatives to the unmodified service retirement allowance which, in general, allow the retired employee to accept a reduced service retirement allowance payable monthly during his or her lifetime and various optional monthly payments to a named beneficiary after his or her death.

Post-retirement increases are provided by authority of NRS 286.575 - .579.

Vesting

Regular members entering the System prior to January 1, 2010, are eligible for retirement at age 65 with five years of service, at age 60 with 10 years of service, or at any age with thirty years of service. Regular members entering the System on or after January 1, 2010, are eligible for retirement at age 65 with five years of service, or age 62 with 10 years of service, or any age with thirty years of service. Regular members who entered the System on or after July 1, 2015, are eligible for retirement at age 65 with 5 years of service, or at age 62 with 10 years of service or at age 55 with 30 years of service or any age with 33 1/3 years of service.

Police/Fire members entering the System prior to January 1, 2010, are eligible for retirement at age 65 with five years of service, at age 55 with ten years of service, at age 50 with twenty years of service, or at any age with twenty-five years of service. Police/Fire members entering the System on or after January 1, 2010, are eligible for retirement at 65 with five years of service, or age 60 with ten years of service, or age 50 with twenty years of service, or at any age with thirty years of service. Only service performed in a position as a police officer or firefighter may be counted towards eligibility for retirement as Police/Fire accredited service.

The normal ceiling limitation on monthly benefits allowances is 75% of average compensation. However, a member who has an effective date of membership before July 1, 1985, is entitled to a benefit of up to 90% of average compensation. Both Regular and Police/Fire members become fully vested as to benefits upon completion of five years of service.

NOTE 17. Retirement and Pension Plans, Continued

Contributions

The authority for establishing and amending the obligation to make contributions and member contribution rates is set by statute. New hires, in agencies which did not elect the Employer-Pay Contribution (EPC) plan prior to July 1, 1983, have the option of selecting one of two contribution plans. In one plan, contributions are shared equally by employer and employee. In the other plan, employees can take a reduced salary and have contributions made by the employer (EPC).

The System's basic funding policy provides for periodic contributions at a level pattern of cost as a percentage of salary throughout an employee's working lifetime in order to accumulate sufficient assets to pay benefits when due.

The System receives an actuarial valuation on an annual basis indicating the contribution rates required to fund the System on an actuarial reserve basis. Contributions actually made are in accordance with the required rates established by the Nevada Legislature. These statutory rates are increased/decreased pursuant to NRS 286.421 and 286.450.

The actuary funding method used is the Entry Age Normal Cost Method. It is intended to meet the funding objective and results in a relatively level long-term contributions requirement as a percentage of salary.

For fiscal years ended June 30, 2019, and 2020, the Statutory Employer/employee matching rate was 14.50% and 15.25% for Regular and 20.75% and 22.00% for Police/Fire.

For the fiscal year ended June 30, 2019, and 2020, the Employer-Pay Contribution (EPC) rate was 28.00% and 29.25% for Regular and 40.50% and 42.50% for Police/Fire.

The City's contributions for the current and two preceding fiscal years, all of which were equal to the required contributions, were as follows:

Year Ended June 30,	Regular Fund	Police/Fire Fund
2018	$ 236,938	$ 342,714
2019	222,775	322,229
2020	249,082	361,914

NOTE 17. Retirement and Pension Plans, Continued

Investment policy

The System's policies which determine the investment portfolio target asset allocation are established by the Board. The asset allocation is reviewed annually and is designed to meet the future risk and return needs of the System. The following was the Board adopted policy target asset allocation as of June 30, 2020:

Asset Class	Target Allocation	Long-term Geometric Expected Real Rate of Return*
U.S. stocks	42%	5.50%
International stocks	18%	5.50%
U.S. bonds	28%	0.75%
Private markets	12%	6.65%

*As of June 30, 2019, PERS' long-term inflation assumption was 2.75%.

Pension liability

Net pension liability

At June 30, 2020, the City reported a liability of $7,719,816 for its proportionate share of the PERS' net pension liability. The net pension liability was measured as of June 30, 2019, and the total pension liability used to calculate the net pension liability was determined by an actuarial valuation as of that date. The employer allocation percentage of the net pension liability was based on the total contributions due on wages paid during the measurement period. Each employer's proportion of the net pension liability is based on their combined employer and member contributions relative to the total combined employer and member contributions for all employers for the period ended June 30, 2019. The City's proportion measured as of June 30, 2019, was 0.05661 percent, which was a decrease of 0.00587 percent from its proportion measured as of June 30, 2018.

Pension liability discount rate sensitivity

The following presents the net pension liability of the PERS as of June 30, 2020, calculated using the discount rate of 7.50%, as well as what the PERS net pension liability would be if it were calculated using a discount rate that is 1-percentage-point lower (6.50%) or 1-percentage-point higher (8.50%) than the current discount rate:

	1% Decrease (6.50%)	Discount Rate (7.50%)	1% Increase (8.50%)
Proportionate share of Net pension (asset) / liability	$ 11,953,201	$ 7,719,816	$ 4,200,799

NOTE 17. Retirement and Pension Plans, Continued

Pension plan fiduciary net position

Detailed information about the pension plan's fiduciary net position is available in the PERS Comprehensive Annual Financial Report, available on the PERS website www.nvpers.org.

Actuarial assumptions

The City's net pension liability was measured as of June 30, 2019, and the total pension liability used to calculate the net pension liability was determined by an actuarial valuation as of that date. The total pension liability was determined using the following actuarial assumptions, applied to all periods included in the measurement:

Inflation rate	2.75%
Investment rate of return	7.50%
Productivity pay increase	0.50%
Projected salary increases	Regular: 4.25% to 9.15%, depending on service Police/Fire: 4.55% to 13.90%, depending on service Rates include inflation and productivity increases
Other assumptions	Same as those used in the June 30, 2019 funding actuarial valuation

Actuarial assumptions used in the June 30, 2019 valuation were based on the results of the experience study for the period July 1, 2012 through June 30, 2016.

The discount rate used to measure the total pension liability was 7.50% as of June 30, 2019. The projection of cash flows used to determine the discount rate assumed plan contributions will be made in amounts consistent with statutory provisions and recognizing the plan's current funding policy and cost-sharing mechanism between employers and members. For this purpose, all contributions that are intended to fund benefits for all plan members and their beneficiaries are included, except that projected contributions that are intended to fund the service costs for future plan members and their beneficiaries are not included.

Based on those assumptions, the pension plan's fiduciary net position was projected to be available to make all projected future benefit payments for current plan members. Therefore, the long-term expected rate of return on pension plan investments was applied to all periods of projected benefit payments to determine the total pension liability as of June 30, 2019.

Pension expense and deferred outflows/inflows of resources related to pensions

For the year ended June 30, 2020, the City recognized pension expense for PERS of $647,664. At June 30, 2020, the City reported deferred outflows of resources and deferred inflows of resources related to pensions from the following sources:

NOTE 17. Retirement and Pension Plans, Continued

	Deferred Outflows of Resources	Deferred Inflows of Resources
Differences between expected and actual experience	$ 289,487	$ 222,670
Changes in assumptions	314,167	-
Net difference between projected and actual earnings on pension plan investments	-	384,036
Subtotal	603,654	606,706
Changes in proportion and differences between contributions and proportional share of contributions	203,073	863,235
Contributions subsequent to the measurement date	610,996	-
Total	$ 1,417,723	$ 1,469,941
Governmental activities	$ 1,152,807	$ 1,195,268
Business-type activities	241,216	250,101
Component unit	23,700	24,573
	$ 1,417,723	$ 1,469,941

Average expected remaining service lives 6.18 years

The $610,996 reported as deferred outflows of resources related to PERS pensions resulting from City contributions subsequent to the measurement date will be recognized as a reduction of the net pension liability in the subsequent fiscal year. Other amounts reported as deferred outflows of resources and deferred inflows of resources related to PERS pensions, excluding the changes in proportion and differences between actual contributions and proportionate share of contributions will be recognized in pension expense as follows:

Year Ending June 30,	Deferred Outflows (Inflows) of Resources
2021	$ 21,737
2022	(146,454)
2023	40,235
2024	49,841
2025	28,325
2026	3,264
Thereafter	-

NOTE 18. Bond Refunding

In August 2019, the City issued $2,173,729 of General Obligation (Limited Tax) Water Revenue Bonds Series 2019. The proceeds were used to refund $2,198,816 of outstanding Water Revenue Bonds Series 1998 which had an interest rate of 4.75%. As a result, the Water Revenue Bonds Series 1998 are considered defeased and the liabilities for those bonds have been removed from the statement of net position. The District refunded Water Revenue Bonds Series 1998 to reduce its future debt service payments by $844,399 and to obtain an economic gain (difference between the present values of the debt service payments on the old and new debt) of $679,532.

This page intentionally left blank

REQUIRED SUPPLEMENTARY INFORMATION

BUDGETARY COMPARISON SCHEDULES FOR THE FOLLOWING MAJOR FUNDS:

The **General Fund** is the City's primary operating fund. It accounts for all financial resources of the general government, except for those required to be accounted for in another fund.

The **Recreation Fund** is used to account for the City's share of room tax proceeds and the distribution of those funds to the recreation district.

PUBLIC EMPLOYEES' RETIREMENT SYSTEM OF NEVADA SCHEDULES

CITY OF WEST WENDOVER, NEVADA
General Fund
Schedule of Revenues, Expenditures, and Changes in Fund Balance
Budget and Actual
For the Year Ended June 30, 2020
(With Comparative Actual Amounts for the Year Ended June 30, 2019)

	Original Budget	Final Budget	Actual	Variance with Final Budget	2019
Revenues					
Property taxes					
Ad valorem	$ 1,327,000	$ 1,327,000	$ 1,280,236	$ (46,764)	$ 1,288,164
Personal property	237,700	237,700	183,309	(54,391)	222,668
Central assessments	19,800	19,800	20,609	809	23,536
Total property taxes	1,584,500	1,584,500	1,484,154	(100,346)	1,534,368
Licenses and permits					
Liquor licenses	1,200	1,200	120	(1,080)	-
City gaming licenses	191,316	191,316	206,232	14,916	216,084
Animal licenses	1,000	1,000	1,344	344	1,574
Business licenses	16,000	16,000	16,825	825	17,005
Right of way toll	270,000	270,000	295,900	25,900	316,050
Building permits	97,000	97,000	100,569	3,569	72,297
Special permits and fees	377,950	377,950	484,215	106,265	2,190
Franchise fees	398,000	398,000	372,852	(25,148)	397,860
Carlines taxes	100	100	101	1	95
Total licenses and permits	1,352,566	1,352,566	1,478,158	125,592	1,023,155
Intergovernmental revenue					
State consolidated revenue	3,006,500	3,006,500	3,011,445	4,945	2,844,516
1.75 cent gas tax	36,200	36,200	33,895	(2,305)	34,084
2.35 cent gas tax	49,500	49,500	46,835	(2,665)	49,476
County road tax	25,400	25,400	23,729	(1,671)	24,215
County transportation funds	193,400	193,400	193,400	-	188,289
County gaming tax	405,000	405,000	385,985	(19,015)	429,278
Federal/state grants	374,000	204,000	14,043	(189,957)	123,892
Infrastructure tax	75,000	75,000	74,572	(428)	75,101
Marijuana revenue disbursement	6,000	6,000	5,411	(589)	-
Reimbursement from Elko County	178,670	179,270	179,270	-	180,300
Total intergovernmental revenue	4,349,670	4,180,270	3,968,585	(211,685)	3,949,151
Charges for services					
Special police services	2,000	2,000	1,795	(205)	1,800
Work cards	6,500	6,500	20,301	13,801	6,070
Special fire protection services	10,000	10,000	7,804	(2,196)	9,717
Dispatch fees	10,000	10,000	5,852	(4,148)	5,716
Animal shelter fees	3,000	3,000	1,985	(1,015)	1,888
Pipeline administrative services	1,900	1,900	1,900	-	1,900
Miscellaneous	15,500	15,500	19,243	3,743	12,309
Total general	48,900	48,900	58,880	9,980	39,400
Fines and forfeitures					
Fines and fees	70,600	70,600	72,274	1,674	67,938
Total fines and forfeitures	70,600	70,600	72,274	1,674	67,938
Miscellaneous					
Interest	10,500	10,500	10,461	(39)	11,595
Donations	168,000	168,000	165,000	(3,000)	173,136
Rents and royalties	31,200	31,200	31,197	(3)	26,232
Miscellaneous	6,000	6,000	1,800	(4,200)	6,225
Total miscellaneous	215,700	215,700	208,458	(7,242)	217,188
Total revenues	7,621,936	7,452,536	7,270,509	(182,027)	6,831,200

(continued)

CITY OF WEST WENDOVER, NEVADA
General Fund
Schedule of Revenues, Expenditures, and Changes in Fund Balance
Budget and Actual
For the Year Ended June 30, 2020
(With Comparative Actual Amounts for the Year Ended June 30, 2019), Continued

	Original Budget	Final Budget	Actual	Variance with Final Budget	2019
Expenditures					
General government					
Administration and finance					
Salaries and wages	470,429	470,429	472,631	(2,202)	424,317
Employee benefits	218,595	218,595	214,318	4,277	184,186
Services and supplies	457,900	436,700	398,758	37,942	496,895
Total administration and finance	1,146,924	1,125,724	1,085,707	40,017	1,105,398
Elections					
Services and supplies	-	-	-	-	1,316
Total general government	1,146,924	1,125,724	1,085,707	40,017	1,106,714
Judicial					
Municipal court					
Salaries and wages	218,805	218,805	218,465	340	202,798
Employee benefits	127,535	127,535	122,193	5,342	114,968
Services and supplies	52,120	52,120	40,441	11,679	52,884
Total judicial	398,460	398,460	381,099	17,361	370,650
Public safety					
Police					
Salaries and wages	1,275,750	1,280,450	1,139,237	141,213	1,038,308
Employee benefits	699,934	701,634	660,288	41,346	563,232
Services and supplies	256,800	252,800	239,197	13,603	286,286
Capital outlay	21,700	25,700	25,017	683	78,595
Total police department	2,254,184	2,260,584	2,063,739	196,845	1,966,421
Fire					
Salaries and wages	402,670	408,670	386,878	21,792	391,512
Employee benefits	237,625	240,125	221,513	18,612	202,542
Services and supplies	99,800	99,800	89,133	10,667	86,315
Total fire department	740,095	748,595	697,524	51,071	680,369
Dispatch center					
Salaries and wages	314,690	314,690	295,807	18,883	246,102
Employee benefits	170,525	170,525	165,527	4,998	135,415
Services and supplies	39,600	39,600	33,401	6,199	46,063
Total dispatch center	524,815	524,815	494,735	30,080	427,580
Total public safety	3,519,094	3,533,994	3,255,998	277,996	3,074,370
Public works					
Paved streets					
Salaries and wages	65,310	65,310	17,575	47,735	23,853
Employee benefits	11,260	11,260	8,778	2,482	11,176
Services and supplies	150,600	150,600	138,425	12,175	147,754
Total paved streets	227,170	227,170	164,778	62,392	182,783

(continued)

CITY OF WEST WENDOVER, NEVADA
General Fund
Schedule of Revenues, Expenditures, and Changes in Fund Balance
Budget and Actual
For the Year Ended June 30, 2020
(With Comparative Actual Amounts for the Year Ended June 30, 2019), Continued

	Original Budget	Final Budget	Actual	Variance with Final Budget	2019
General					
Salaries and wages	240,145	240,145	249,262	(9,117)	216,950
Employee benefits	139,245	139,245	134,924	4,321	111,622
Services and supplies	32,600	32,600	37,280	(4,680)	34,080
Total general	411,990	411,990	421,466	(9,476)	362,652
Total public works	639,160	639,160	586,244	52,916	545,435
Community development					
Salaries and wages	154,990	172,890	137,500	35,390	134,319
Employee benefits	65,860	76,760	60,390	16,370	56,126
Services and supplies	160,486	160,486	88,186	72,300	72,717
Total community development	381,336	410,136	286,076	124,060	263,162
Health					
Public health services					
Services and supplies	12,500	12,500	6,066	6,434	6,025
Animal control					
Salaries and wages	63,883	63,883	61,981	1,902	60,699
Employee benefits	31,030	31,030	30,387	643	28,278
Services and supplies	22,100	20,500	16,574	3,926	22,472
Capital outlay	50,000	50,000	45,552	4,448	-
Total animal control	167,013	165,413	154,494	17,353	111,449
Total health	179,513	177,913	160,560	23,787	117,474
Culture and recreation					
Library service					
Services and supplies	18,310	18,310	14,755	3,555	14,474
Total culture and recreation	18,310	18,310	14,755	3,555	14,474
Community support					
Miscellaneous					
Services and supplies	52,500	52,500	48,890	3,610	35,269
Total community support	52,500	52,500	48,890	3,610	35,269
Debt services	56,249	56,249	56,249	-	55,401
Total expenditures	6,391,546	6,412,446	5,875,578	543,302	5,582,949
Excess (deficiency) of revenues over (under) expenditures	1,230,390	1,040,090	1,394,931	(354,841)	1,248,251
Other financing sources (uses)					
Transfers out	(584,000)	(589,000)	(589,000)	-	(401,500)
Total other financing sources and uses	(584,000)	(589,000)	(589,000)	-	(401,500)
Net change in fund balance	646,390	451,090	805,931	354,841	846,751
Fund balance, beginning of year	1,901,261	1,901,261	1,901,261	-	1,054,510
Fund balance, end of year	$ 2,547,651	$ 2,352,351	$ 2,707,192	$ 354,841	$ 1,901,261

CITY OF WEST WENDOVER, NEVADA
Recreation Fund
Schedule of Revenues, Expenditures, and Changes in Fund Balance
Budget and Actual
For the Year Ended June 30, 2020
(With Comparative Actual Amounts for the Year Ended June 30, 2019)

	Original Budget	Final Budget	Actual	Variance with Final Budget	2019
Revenues					
Taxes					
Room taxes	$ 1,674,000	$ 1,674,000	$ 1,599,360	$ (74,640)	$ 2,242,802
Total revenues	1,674,000	1,674,000	1,599,360	(74,640)	2,242,802
Expenditures					
Culture and recreation					
Room tax distribution	1,697,273	1,697,273	1,615,809	81,464	2,265,856
Total culture and recreation	1,697,273	1,697,273	1,615,809	81,464	2,265,856
Total expenditures	1,697,273	1,697,273	1,615,809	81,464	2,265,856
Net change in fund balance	(23,273)	(23,273)	(16,449)	6,824	(23,054)
Fund balance, beginning of year	134,563	134,563	134,563	-	157,617
Fund balance, end of year	$ 111,290	$ 111,290	$ 118,114	$ 6,824	$ 134,563

CITY OF WEST WENDOVER, NEVADA
Schedule of the Proportionate Share of the Net Pension Liability
Public Employees' Retirement System of Nevada
June 30, 2020
Last 10 Fiscal Years

	Reporting Fiscal Year (Measurement Date)					
	2020 (2019)	**2019 (2018)**	**2018 (2017)**	**2017 (2016)**	**2016 (2015)**	**2015 (2014)**
Proportion of the net pension liability (asset)	0.056610%	0.062480%	0.062300%	0.063600%	0.059820%	0.068384%
Proportionate share of the net pension liability (asset)	$ 7,719,816	$ 8,521,101	$ 8,286,307	$ 8,558,081	$ 6,854,700	$ 6,653,165
Covered payroll	$ 3,394,178	$ 3,327,353	$ 3,429,997	$ 3,355,482	$ 2,961,477	$ 3,113,721
Proportionate share of the net pension liability (asset) as a percentage of its covered payroll	227.44%	256.09%	241.58%	255.05%	231.46%	213.67%
Plan fiduciary net position as a percentage of the total pension liability	76.5%	75.2%	74.4%	72.2%	75.1%	76.30%

The City implemented GASB 68 in fiscal year 2015. Prior year information is not available.

CITY OF WEST WENDOVER, NEVADA
Schedule of Contributions
Public Employees' Retirement System of Nevada
June 30, 2020
Last 10 Fiscal Years

	Reporting Fiscal Year						
	2020	**2019**	**2018**	**2017**	**2016**	**2015**	**2014**
Contractually required contribution	$ 610,996	$ 545,004	$ 579,653	$ 559,234	$ 539,193	$ 461,652	$ 483,635
Contributions in relation to the contractually required contribution	$ (610,996)	$ (545,004)	$ (579,653)	$ (559,234)	$ (539,193)	$ (461,652)	$ (483,635)
Contribution deficiency (excess)	$ -	$ -	$ -	$ -	$ -	$ -	$ -
Covered payroll	$ 3,604,289	$ 3,394,178	$ 3,327,353	$ 3,429,997	$ 3,355,482	$ 2,961,477	$ 3,113,721
Contributions as a percentage of covered-employee payroll	16.95%	16.06%	17.42%	16.30%	16.07%	15.59%	15.53%

The City implemented GASB 68 in fiscal year 2015. Prior year information is not available.

This page left intentionally blank

SUPPLEMENTARY INFORMATION

NONMAJOR GOVERNMENTAL FUNDS

Special revenue funds are used to account for specific revenues that are legally restricted to expenditure for particular purposes.

The **Seizure and Forfeiture Fund** is used to account for seizures and forfeitures received by the City under City Resolution 1992-09, as provided for in NRS 179.1187

The **Court Administrative Assessment Fund** is used to account for fees collected by the court as required by Nevada Revised Statues Section 176.059, which are used to improve the operations of the court.

The **Welcome Center Fund** is used to account for the merchandise sales and operations of the Welcome Center as established under City Resolution 2001-04.

The **Wendover Will Landmark Fund** is used to account for the construction, maintenance, and related revenues and expenditures associated with the Wendover Will Landmark as established by City Resolution 2005-01.

The **Grant Fund** is used to account for various grants receipts and expenditures as outlined in Resolution 1996-14.

Capital project funds are used to account for the acquisition and construction of major capital facilities other than those financed by proprietary funds.

The **Capital Projects Fund** is used to account for the acquisition or construction of capital facilities as outlined in Resolution 1997-14.

The **Ad Valorem Capital Projects Fund** is used to account for revenue received from a special ad valorem tax that must be recorded in a capital projects fund and dedicated to capital project needs within the City, as established under NRS 268.045.

CITY OF WEST WENDOVER, NEVADA
Combining Balance Sheet
Nonmajor Governmental Funds
June 30, 2020

	Special Revenue					Capital Project		Total
	Seizure Forfeiture Fund	Court Administrative Assessment Fund	Welcome Center Fund	Wendover Will Landmark Fund	Grant Fund	Capital Projects Fund	Ad Valorem Capital Projects Fund	Nonmajor Governmental Funds
Assets								
Cash and investments	$ 22,960	$ 60,543	$ 37,903	$ 12,201	$ -	$ 2,495	$ 17,926	$ 154,028
Due from other governments	-	-	-	-	34,440	-	9,220	43,660
Inventory	-	-	785	-	-	-	-	785
Restricted cash	-	-	-	-	-	313,500	-	313,500
Total assets	$ 22,960	$ 60,543	$ 38,688	$ 12,201	$ 34,440	$ 315,995	$ 27,146	$ 511,973
Liabilities								
Accounts payable	$ 19,173	$ -	$ 1,812	$ 172	$ -	$ 1,214	$ -	$ 22,371
Due to other funds	-	-	-	-	34,440	-	-	34,440
Total liabilities	19,173	-	1,812	172	34,440	1,214	-	56,811
Fund Balances								
Nonspendable	-	-	785	-	-	-	-	785
Restricted	3,787	60,543	36,091	-	-	314,781	27,146	442,348
Committed	-	-	-	12,029	-	-	-	12,029
Total fund balances	3,787	60,543	36,876	12,029	-	314,781	27,146	455,162
Total liabilities and fund balances	$ 22,960	$ 60,543	$ 38,688	$ 12,201	$ 34,440	$ 315,995	$ 27,146	$ 511,973

CITY OF WEST WENDOVER, NEVADA
Combining Statement of Revenues, Expenditures, and Changes in Fund Balances
Nonmajor Governmental Funds
For the Year Ended June 30, 2020

	Special Revenue					Capital Project		
	Seizure Forfeiture Fund	Court Administrative Assessment Fund	Welcome Center Fund	Wendover Will Landmark Fund	Grant Fund	Capital Projects Fund	Ad Valorem Capital Projects Fund	Total Nonmajor Governmental Funds
Revenues								
Other taxes	$ -	$ -	$ -	$ -	$ -	$ -	$ 48,160	$ 48,160
Intergovernmental	-	-	106,850	-	34,440	-	-	141,290
Charges for services	-	9,679	-	-	-	-	-	9,679
Miscellaneous	-	297	3,050	398	-	5,759	-	9,504
Total revenues	-	9,976	109,900	398	34,440	5,759	48,160	208,633
Expenditures								
Judicial	-	7,409	-	-	-	-	-	7,409
Public safety	-	-	-	-	34,440	-	-	34,440
Community support	-	-	241,629	17,891	-	-	-	259,520
Capital outlay	-	-	-	-	-	121,505	-	121,505
Debt service	-	-	-	-	-	515,123	-	515,123
Total expenditures	-	7,409	241,629	17,891	34,440	636,628	-	937,997
Excess (deficiency) of revenues over (under) expenditures	-	2,567	(131,729)	(17,493)	-	(630,869)	48,160	(729,364)
Other financing sources (uses)								
Transfers in	-	9,000	110,000	20,000	-	499,575	-	638,575
Transfers out	-	-	-	-	-	-	(49,575)	(49,575)
Total other financing sources (uses)	-	9,000	110,000	20,000	-	499,575	(49,575)	589,000
Net change in fund balances	-	11,567	(21,729)	2,507	-	(131,294)	(1,415)	(140,364)
Fund balances, beginning of year	3,787	48,976	58,605	9,522	-	446,075	28,561	595,526
Fund balances, end of year	$ 3,787	$ 60,543	$ 36,876	$ 12,029	$ -	$ 314,781	$ 27,146	$ 455,162

CITY OF WEST WENDOVER, NEVADA
Seizure Forfeiture Fund
Schedule of Revenues, Expenditures, and Changes in Fund Balance
Budget and Actual
For the Year Ended June 30, 2020
(With Comparative Actual Amounts for the Year Ended June 30, 2019)

	Original Budget	Final Budget	Actual	Variance with Final Budget	2019
Revenues					
Miscellaneous					
Interest income	$ -	$ -	$ -	$ -	$ -
Total revenues	-	-	-	-	-
Expenditures					
Public Safety					
Services and supplies	-	-	-	-	-
Total expenditures	-	-	-	-	-
Excess of revenues over (under) expenditures	-	-	-	-	-
Other financing sources					
Transfers in	-	-	-	-	-
Transfers out	-	-	-	-	-
Net change in fund balance	-	-	-	-	-
Fund balance, beginning of year	3,787	3,787	3,787	-	3,787
Fund balance, end of year	$ 3,787	$ 3,787	$ 3,787	$ -	$ 3,787

CITY OF WEST WENDOVER, NEVADA
Court Administrative Assessments Fund
Schedule of Revenues, Expenditures, and Changes in Fund Balance
Budget and Actual
For the Year Ended June 30, 2020
(With Comparative Actual Amounts for the Year Ended June 30, 2019)

	Original Budget	Final Budget	Actual	Variance with Final Budget	2019
Revenues					
Charges for services					
Court assessments	$ 9,400	$ 9,400	$ 9,679	$ 279	$ 8,633
Miscellaneous					
Interest	400	400	297	(103)	453
Total revenues	9,800	9,800	9,976	176	9,086
Expenditures					
Judicial					
Services and supplies	600	600	570	30	3,184
Capital outlay	6,850	6,850	6,839	11	2,653
Total expenditures	7,450	7,450	7,409	41	5,837
Excess of revenue and other sources over (under) expenditures	2,350	2,350	2,567	135	3,249
Other financing sources					
Transfers in	9,000	9,000	9,000	-	-
Net change in fund balance	11,350	11,350	11,567	135	3,249
Fund balance, beginning of year	48,976	48,976	48,976	-	45,727
Fund balance, end of year	$ 60,326	$ 60,326	$ 60,543	$ 217	$ 48,976

CITY OF WEST WENDOVER, NEVADA
Welcome Center Fund
Schedule of Revenues, Expenditures, and Changes in Fund Balance
Budget and Actual
For the Year Ended June 30, 2020
(With Comparative Actual Amounts for the Year Ended June 30, 2019)

	Original Budget	Final Budget	Actual	Variance with Final Budget	2019
Revenues					
Intergovernmental					
Operating grants	$ 31,200	$ 31,200	$ 31,150	$ (50)	$ 57,000
Elko county recreation board	75,700	75,700	75,700	-	88,000
Total intergovernmental	106,900	106,900	106,850	(50)	145,000
Miscellaneous					
Merchandise sales	2,600	2,600	3,050	450	2,835
Total miscellaneous	2,600	2,600	3,050	450	2,835
Total revenues	109,500	109,500	109,900	400	147,835
Expenditures					
Community support					
Salaries and wages	102,550	102,550	102,286	264	97,135
Employee benefits	57,109	57,109	54,876	2,233	45,877
Services and supplies	46,310	46,310	29,506	16,804	48,618
Capital outlay	58,500	58,500	54,961	3,539	81,691
Total expenditures	264,469	264,469	241,629	22,840	273,321
Excess of revenues over (under) expenditures	(154,969)	(154,969)	(131,729)	23,240	(125,486)
Other financing sources					
Transfers in	110,000	110,000	110,000	-	177,000
Net change in fund balance	(44,969)	(44,969)	(21,729)	23,240	51,514
Fund balance, beginning of year	58,605	58,605	58,605	-	7,091
Fund balance, end of year	$ 13,636	$ 13,636	$ 36,876	$ 23,240	$ 58,605

CITY OF WEST WENDOVER, NEVADA
Wendover Will Landmark Fund
Schedule of Revenues, Expenditures, and Changes in Fund Balance
Budget and Actual
For the Year Ended June 30, 2020
(With Comparative Actual Amounts for the Year Ended June 30, 2019)

	Original Budget	Final Budget	Actual	Variance with Final Budget	2019
Revenues					
Miscellaneous					
Donations from private sources	$ -	$ -	$ -	$ -	$ -
Merchandise sales	500	500	321	(179)	945
Interest revenue	100	100	77	(23)	363
Total revenues	600	600	398	(202)	1,308
Expenditures					
Community Support					
Services and supplies	20,300	22,300	17,891	4,409	18,411
Total expenditures	20,300	22,300	17,891	4,409	18,411
Excess of revenues over (under) expenditures	(19,700)	(21,700)	(17,493)	4,207	(17,103)
Other financing sources					
Transfers in	15,000	20,000	20,000	-	24,500
Net change in fund balance	(4,700)	(1,700)	2,507	4,207	7,397
Fund balance, beginning of year	9,522	9,522	9,522	-	2,125
Fund balance, end of year	$ 4,822	$ 7,822	$ 12,029	$ 4,207	$ 9,522

CITY OF WEST WENDOVER, NEVADA
Grant Fund
Schedule of Revenues, Expenditures, and Changes in Fund Balance
Budget and Actual
For the Year Ended June 30, 2020
(With Comparative Actual Amounts for the Year Ended June 30, 2019)

	Original Budget	Final Budget	Actual	Variance with Final Budget	2019
Revenues					
Intergovernmental					
Grant revenue	$ -	$ 34,440	$ 34,440	$ -	$ -
Total intergovernmental	-	34,440	34,440	-	-
Total revenues	-	34,440	34,440	-	-
Expenditures					
Public saftey					
Salaries and wages	-	25,889	25,889	-	-
Employee benefits	-	8,551	8,551	-	-
Total public safey	-	34,440	34,440	-	-
Total expenditures	-	34,440	34,440	-	-
Net change in fund balance	-	-	-	-	-
Fund balance, beginning of year	-	-	-	-	
Fund balance, end of year	$ -	$ -	$ -	$ -	$ -

CITY OF WEST WENDOVER, NEVADA
Capital Projects Fund
Schedule of Revenues, Expenditures, and Changes in Fund Balance
Budget and Actual
For the Year Ended June 30, 2020
(With Comparative Actual Amounts for the Year Ended June 30, 2019)

	Original Budget	Final Budget	Actual	Variance with Final Budget	2019
Revenues					
Intergovernmental					
Federal grants	$ 525,000	$ 525,000	$ -	$ (525,000)	$ -
Total intergovernmental	525,000	525,000	-	(525,000)	-
Miscellaneous					
Interest income	900	900	861	(39)	1,532
Miscellaneous	5,000	5,000	4,898	(102)	3,471
Sale of capital assets	-	-	-	-	713,104
Total miscellaneous	5,900	5,900	5,759	(141)	718,107
Total revenues	530,900	530,900	5,759	(525,141)	718,107
Expenditures					
General government					
Capital outlay	12,482,800	12,502,800	121,505	12,381,295	45,015
Total general government	12,482,800	12,502,800	121,505	12,381,295	45,015
Debt service					
Debt service - principal	305,507	305,507	305,507	-	562,583
Debt service - interest	209,656	209,656	209,616	40	232,424
Total debt service	515,163	515,163	515,123	40	795,007
Total expenditures	12,997,963	13,017,963	636,628	12,381,335	840,022
Excess of revenues over (under) expenditures	(12,467,063)	(12,487,063)	(630,869)	11,856,194	(121,915)
Other financing sources (uses)					
Transfers in	499,575	499,575	499,575	-	250,000
Total other financing sources	12,346,375	12,346,375	499,575	(11,846,800)	250,000
Net change in fund balance	(120,688)	(140,688)	(131,294)	9,394	128,085
Fund balance, beginning of year	446,075	446,075	446,075	-	317,990
Fund balance, end of year	$ 325,387	$ 305,387	$ 314,781	$ 9,394	$ 446,075

CITY OF WEST WENDOVER, NEVADA
Ad Valorem Capital Projects Fund
Schedule of Revenues, Expenditures, and Changes in Fund Balance
Budget and Actual
For the Year Ended June 30, 2020
(With Comparative Actual Amounts for the Year Ended June 30, 2019)

	Original Budget	Final Budget	Actual	Variance with Final Budget	2019
Revenues					
Other taxes					
Ad valorem tax	$ 51,113	$ 51,113	$ 48,160	$ (2,953)	$ 48,464
Total revenues	51,113	51,113	48,160	(2,953)	48,464
Expenditures					
	-	-	-	-	-
Total expenditures	-	-	-	-	-
Excess of revenues over (under) expenditures	51,113	51,113	48,160	(2,953)	48,464
Other financing sources (uses)					
Transfers out	(51,113)	(49,575)	(49,575)	-	(50,000)
Net change in fund balance	-	1,538	(1,415)	(2,953)	(1,536)
Fund balance, beginning of year	28,561	28,561	28,561	-	30,097
Fund balance, end of year	$ 28,561	$ 30,099	$ 27,146	$ (2,953)	$ 28,561

MAJOR BUSINESS-TYPE FUNDS

CITY OF WEST WENDOVER, NEVADA
Water Fund
Schedule of Revenues, Expenditures, and Changes in Net Position
Budget and Actual
For the Year Ended June 30, 2020
(With Comparative Actual Amounts for the Year Ended June 30, 2019)

	Original Budget	Final Budget	Actual	Variance with Final Budget	2019
Operating revenues					
Charges for services	$ 1,262,500	$ 1,262,500	$ 1,262,586	$ 86	$ 1,311,566
Total operating revenues	1,262,500	1,262,500	1,262,586	86	1,311,566
Operating expenses					
Water purchases	530,000	530,000	508,677	21,323	528,129
Salaries and wages	272,054	272,054	274,927	(2,873)	213,542
Employee benefits	129,720	129,720	137,238	(7,518)	114,733
Services and supplies	403,210	403,210	399,073	4,137	287,440
Depreciation and amortization	138,001	138,001	142,684	(4,683)	138,001
Total operating expenses	1,472,985	1,472,985	1,462,599	10,386	1,281,845
Operating income	(210,485)	(210,485)	(200,013)	10,472	29,721
Nonoperating revenues (expenses)					
Interest income	53,000	53,000	75,950	22,950	123,037
Impact fees	10,000	10,000	8,973	(1,027)	66,586
Miscellaneous income	7,000	7,000	6,868	(132)	9,920
Contributions from component unit for debt payments	10,584	10,584	10,584	-	10,584
Capital outlay	(1,600)	(1,600)	17	1,617	(124)
Interest expense	(110,088)	(110,088)	(81,947)	28,141	(132,540)
Total nonoperating revenues (expenses)	(31,104)	(31,104)	20,445	51,549	77,463
Change in net position	(241,589)	(241,589)	(179,568)	62,021	107,184
Total net position, beginning of year	3,850,221	3,850,221	3,850,221	-	3,743,037
Total net position, end of year	$ 3,608,632	$ 3,608,632	$ 3,670,653	$ 62,021	$ 3,850,221

CITY OF WEST WENDOVER, NEVADA
Sewer Fund
Schedule of Revenues, Expenditures, and Changes in Net Position
Budget and Actual
For the Year Ended June 30, 2020
(With Comparative Actual Amounts for the Year Ended June 30, 2019)

	Original Budget	Final Budget	Actual	Variance with Final Budget	2019
Operating revenues					
Charges for services:					
Charges for services	$ 1,073,710	$ 1,073,710	$ 1,111,355	$ 37,645	$ 1,223,089
Total operating revenues	1,073,710	1,073,710	1,111,355	37,645	1,223,089
Operating expenses					
Salaries and wages	341,330	341,330	285,967	55,363	335,705
Employee benefits	192,582	192,582	160,130	32,452	183,735
Services and supplies	497,500	497,500	465,622	31,878	475,062
Capital outlay	23,000	23,000	12,142	10,858	-
Depreciation and amortization	555,500	555,500	550,495	5,005	554,965
Total operating expenses	1,609,912	1,609,912	1,474,356	135,556	1,549,467
Operating loss	(536,202)	(536,202)	(363,001)	173,201	(326,378)
Nonoperating revenues (expenses)					
Interest income	1,300	1,300	1,338	38	2,062
Impact fees	7,000	(7,000)	6,691	13,691	52,324
Miscellaneous income	3,600	3,600	2,617	(983)	2,349
Interest expense	(73,303)	(73,303)	(74,275)	(972)	(76,252)
Total nonoperating revenues	(61,403)	(75,403)	(63,629)	11,774	(19,517)
Change in net position	(597,605)	(611,605)	(426,630)	184,975	(345,895)
Total net position, beginning of year	8,875,380	8,875,380	8,875,380	-	9,221,275
Total net position, end of year	$ 8,875,380	$ 8,875,380	$ 8,448,750	$ (426,630)	$ 8,875,380

CITY OF WEST WENDOVER, NEVADA
Garbage / Compost Facility Fund
Schedule of Revenues, Expenditures, and Changes in Net Position
Budget and Actual
For the Year Ended June 30, 2020
(With Comparative Actual Amounts for the Year Ended June 30, 2019)

	Original Budget	Final Budget	Actual	Variance with Final Budget	2019
Operating revenues					
Charges for services	$ 1,312,492	$ 1,312,492	$ 1,378,388	$ 65,896	$ 1,427,019
Total operating revenues	1,312,492	1,312,492	1,378,388	65,896	1,427,019
Operating expenses					
Salaries and wages	355,659	355,659	253,578	102,081	277,179
Employee benefits	200,578	200,578	142,435	58,143	143,187
Services and supplies	316,400	316,400	213,201	103,199	223,840
Capital outlay	20,000	20,000	9,632	10,368	6,240
Depreciation and amortization	344,000	344,000	381,259	(37,259)	335,366
Total operating expenses	1,236,637	1,236,637	1,000,105	236,532	985,812
Operating income	75,855	75,855	378,283	302,428	441,207
Nonoperating revenues (expenses)					
Interest income	7,000	7,000	6,815	(185)	6,545
Miscellaneous income	11,000	11,000	11,424	424	2,522
Interest expense	(29,067)	(29,067)	(32,746)	(3,679)	(26,244)
Total nonoperating expenses	(11,067)	(11,067)	(14,507)	(3,440)	(17,177)
Change in net position	64,788	64,788	363,776	298,988	424,030
Total net position, beginning of year	3,604,730	3,604,730	3,604,730	-	3,180,700
Total net position, end of year	$ 3,669,518	$ 3,669,518	$ 3,968,506	$ 298,988	$ 3,604,730

COMPONENT UNIT SUPPLEMENTARY SCHEDULES

CITY OF WEST WENDOVER, NEVADA
Component Unit – Johnson Springs
Statement of Net Position
For the Year Ended June 30, 2020

	Component Unit Johnson Springs
Assets	
Current assets	
Cash and investments	$ 109,213
Accounts receivable, net	64,273
Inventory	11,291
Total current assets	184,777
Noncurrent assets	
Land	18,000
Buildings	6,836,936
Improvements other than buildings	411,632
Machinery and equipment	571,254
Utility system	5,316,197
Less accumulated depreciation	(7,222,556)
Total noncurrent assets	5,931,463
Total assets	6,116,240
Deferred Outflows of Resources	
Deferred outflows related to pensions	23,700
Liabilities	
Current liabilities	
Accounts payable	19,910
Accrued liabilities	1,687
Due to primary government	2,158,147
Compensated absences	5,718
Total current liabilities	2,185,462
Noncurrent liabilities:	
Net pension liability	129,051
Total noncurrent liabilities	129,051
Total liabilities	2,314,513
Deferred Inflows of Resources	
Deferred inflows related to pensions	24,573
Net Position	
Net investment in capital assets	3,773,316
Unrestricted	27,538
Total net position	$ 3,800,854

CITY OF WEST WENDOVER, NEVADA
Component Unit – Johnson Springs
Schedule of Revenues, Expenditures, and Changes in Net Position
Budget and Actual
For the Year Ended June 30, 2020
(With Comparative Actual Amounts for the Year Ended June 30, 2019)

	Original Budget	Final Budget	Actual	Variance with Final Budget	2019
Operating revenues					
Charges for services	$ 568,433	$ 568,433	$ 580,555	$ 12,122	$ 687,579
Total operating revenues	568,433	568,433	580,555	12,122	687,579
Operating expenses					
Water purchases	112,000	112,000	112,211	(211)	136,817
Salaries and wages	44,750	44,750	47,186	(2,436)	32,018
Employee benefits	41,500	41,500	(198)	41,698	(8,108)
Services and supplies	273,800	273,800	257,005	16,795	267,552
Depreciation and amortization	392,300	392,300	392,587	(287)	383,516
Total operating expenses	864,350	864,350	808,791	55,559	811,795
Operating loss	(295,917)	(295,917)	(228,236)	67,681	(124,216)
Nonoperating revenues (expenses)					
Interest income	25,241	25,241	25,241	-	31,687
Miscellaneous income	12,000	12,000	14,927	2,927	12,001
Debt paid through primary government	(10,584)	(10,584)	(10,584)	-	(10,584)
Interest expense	(105,382)	(105,382)	(66,606)	38,776	(107,585)
Total nonoperating revenues (expenses)	(78,725)	(78,725)	(37,022)	41,703	(74,481)
Change in net position	(374,642)	(374,642)	(265,258)	109,384	(198,697)
Total net position, beginning of year	4,066,112	4,066,112	4,066,112	-	4,264,809
Total net position, end of year	$ 3,691,470	$ 3,691,470	$ 3,800,854	$ 109,384	$ 4,066,112

CITY OF WEST WENDOVER, NEVADA
Component Unit – Johnson Springs
Statement of Cash Flows
June 30, 2020

	Component Unit Johnson Springs
Cash Flows From Operating Activities:	
Cash received from customers, service fees	$ 575,596
Cash paid to suppliers	(400,389)
Cash paid to employees	(74,965)
Net cash flows from operating activities	100,242
Cash Flows From Noncapital Financing Activities:	
Net component unit receipts/(payments)	(120,597)
Cash received from miscellaneous sources	14,927
Net cash flows from noncapital financing activities	(105,670)
Cash Flows From Capital and Related Financing Activities:	
Interest paid on capital debt	(66,606)
Acquisition and construction of capital assets	(11,065)
Net cash flows from capital and related financing activities	(77,671)
Cash Flows From Investing Activities:	
Interest income	25,241
Net change in cash and cash equivalents	(57,858)
Cash and investments, including restricted cash, beginning of year	167,071
Cash and Cash Equivalents, Including Restricted Cash , End of Year	$ 109,213
Reconciliation of operating income to net cash flows from operating activities:	
Operating income (loss)	$ (228,236)
Adjustments to reconcile net income (loss) to net cash from operating activities	
Depreciation/amortization	392,587
Pension expense	(12,326)
Employer pension contributions	(10,214)
Changes in operating assets and liabilities:	
(Increase) decrease in receivables	(4,959)
(Increase) decrease in inventory	2,098
Increase (decrease) in accounts payable	(33,271)
Increase (decrease) in compensated absences	(5,437)
Net cash flows from operating activities	$ 100,242

OTHER COMMUNICATIONS FROM INDEPENDENT AUDITORS

This page intentionally left blank

HINTON BURDICK
CPAs & ADVISORS

Independent Auditors' Report on Internal Control Over Financial Reporting and on Compliance and Other Matters Based on an Audit of Financial Statements Performed in Accordance with *Government Auditing Standards*

The Honorable Mayor and City Council
West Wendover, Nevada

We have audited, in accordance with the auditing standards generally accepted in the United States of America and the standards applicable to financial audits contained in *Government Auditing Standards* issued by the Comptroller General of the United States, the financial statements of the governmental activities, the business-type activities, the aggregate discretely presented component units, each major fund, and the aggregate remaining fund information of City of West Wendover, Nevada, as of and for the year ended June 30, 2020, and the related notes to the financial statements, which collectively comprise City of West Wendover, Nevada 's basic financial statements and have issued our report thereon dated November 2, 2020.

Internal Control Over Financial Reporting

In planning and performing our audit of the financial statements, we considered City of West Wendover, Nevada's internal control over financial reporting (internal control) as a basis for designing audit procedures that are appropriate in the circumstances for the purpose of expressing our opinions on the financial statements, but not for the purpose of expressing an opinion on the effectiveness of City of West Wendover, Nevada's internal control. Accordingly, we do not express an opinion on the effectiveness of City of West Wendover, Nevada's internal control.

A *deficiency in internal control* exists when the design or operation of a control does not allow management or employees, in the normal course of performing their assigned functions, to prevent, or detect and correct, misstatements on a timely basis. A *material weakness* is a deficiency, or a combination of deficiencies, in internal control, such that there is a reasonable possibility that a material misstatement of the entity's financial statements will not be prevented, or detected and corrected on a timely basis. A *significant deficiency* is a deficiency, or a combination of deficiencies, in internal control that is less severe than a material weakness, yet important enough to merit attention by those charged with governance.

Our consideration of internal control was for the limited purpose described in the first paragraph of this section and was not designed to identify all deficiencies in internal control that might be material weaknesses or significant deficiencies. Given these limitations, during our audit we did not identify any deficiencies in internal control that we consider to be material weaknesses. However, material weaknesses may exist that have not been identified.

Compliance and Other Matters

As part of obtaining reasonable assurance about whether City of West Wendover, Nevada's financial statements are free from material misstatement, we performed tests of its compliance with certain provisions of laws, regulations, contracts, and grant agreements, noncompliance with which could have a direct and material effect on the financial statements. However, providing an opinion on compliance with those provisions was not an objective of our audit, and accordingly, we do not express such an opinion. The results of our tests disclosed no instances of noncompliance or other matters that are required to be reported under *Government Auditing Standards*.

Purpose of this Report

The purpose of this report is solely to describe the scope of our testing of internal control and compliance and the results of that testing, and not to provide an opinion on the effectiveness of the entity's internal control or on compliance. This report is an integral part of an audit performed in accordance with *Government Auditing Standards* in considering the entity's internal control and compliance. Accordingly, this communication is not suitable for any other purpose.



HintonBurdick, PLLC
St. George, Utah
November 2, 2020

HINTON BURDICK
CPAs & ADVISORS

Independent Auditor's Report on Compliance
With Statutes and Administrative Code in Accordance
With NRS 354.624(4) and 354.6241

The Honorable Mayor and City Council
West Wendover, NV

We have audited the basic financial statements of the City of West Wendover, Nevada for the year ended June 30, 2020, and have issued our report thereon dated November 2, 2020. Our audit also included test work on the City of West Wendover's compliance with selected requirements identified in the State of Nevada Revised Statutes (NRS) including, but not limited to, NRS section 354.624 and section 354.6241.

The management of the City of West Wendover is responsible for the City's compliance with all requirements identified above. Our responsibility is to express an opinion on compliance with those requirements based on our audit and make specific statements regarding funds established and the status of prior year findings and recommendations; accordingly, we make the following statements:

The City of West Wendover had one prior year compliance finding that was resolved during fiscal year 2020. We noted one new instance of noncompliance during fiscal year 2020. See the accompanying schedule of findings and recommendations.

The City of West Wendover has established several funds in accordance with NRS 354.624 as follows:

Enterprise Funds:
- Water Fund
- Sewer Fund
- Garbage / Compost Facility Fund

Funds whose balance is required to be used only for a specific purpose or carried forward to the succeeding fiscal year in any designated amount:

Special Revenue Funds:
- Seizure Forfeiture Fund
- Recreation Fund
- Court Administrative Assessment Fund
- Medical Clinic Facilities Fund (combined with the General Fund for reporting)
- Grants Fund
- Welcome Center Fund
- Wendover Will Landmark Fund

Capital Projects Funds:
- Capital Projects Fund
- Ad Valorem Capital Projects Fund

The City of West Wendover appears to be using the above listed funds expressly for the purposes for which they were created and in accordance with NRS 354.624. The funds are being administered in accordance with Generally Accepted Accounting Principles and the reserves, as applicable, appear reasonable and necessary to carry out the purposes of the funds. Sources of revenues available and fund balances and net position are reflected in the individual fund financial statements.

The statutory and regulatory requirements of the funds are as follows:

Water Fund:	NRS 354.517
Sewer Fund:	NRS 354.517
Garbage / Compost Facility Fund:	NRS 354.517
Seizure Forfeiture Fund:	Resolution 1992-09
Recreation Fund:	NRS 268.798
Court Administrative Assessment Fund:	NRS 176.059
Grant Fund:	Resolution 1996-14
Welcome Center Fund:	Resolution 2001-04
Wendover Will Landmark Fund	Resolution 2005-01
Capital Projects Fund	Resolution 1997-14
Ad Valorem Capital Projects Fund	NRS 268.045

NRS 354.624 requires that a schedule of all fees imposed by the City which were subject to the provisions of NRS 354.5989 be provided. The City has not increased any fees subject to the limitations provided by NRS 354.5989; however the schedule for these fees immediately follows this report.

We conducted our audit in accordance with auditing standards generally accepted in the United States of America and *Government Auditing Standards*, issued by the Comptroller General of the United States. Those standards require that we plan and perform the audit to obtain reasonable assurance about whether material noncompliance with the requirements referred to above occurred. An audit includes examining, on a test basis, evidence about the City's compliance with those requirements. We believe that our audit provides a reasonable basis for our opinion.

In our opinion, The City of West Wendover, Nevada complied, in all material respects, with the requirements identified above for the year ended June 30, 2020.

Other Matters

The results of our auditing procedures disclosed instances of noncompliance, which are required to be reported in accordance with NRS 354.624 and 354.6241. Our finding is described in a separate schedule of findings and recommendations, as item 2020-001. Our opinion on compliance is not modified with respect to this matter.

The purpose of this report is solely to describe the scope of our testing of the applicable compliance requirements identified in the Nevada Revised Statutes (NRS) and the results of that testing based on the state requirements. Accordingly, this report is not suitable for any other purpose.

HintonBurdick, PLLC

HintonBurdick, PLLC
St. George, Utah
November 2, 2020

CITY OF WEST WENDOVER, NEVADA
Schedule of Fees Imposed Subject to the Provision of NRS 354.5989
Limitation on Fees for Business Licenses
For the Year ended June 30, 2020

Flat Fixed Fees:

Business license revenue adjusted base at June 30, 2019		$ 21,726
Adjustment to Base:		
1. Percentage change in population of the local government	0.0%	
2. Percentage increase in the Consumer Price Index for the year ending on December 31, next preceding the year for which the limit is being calculated	0.6%	0.6%
Increase in base		130
Adjusted base at June 30, 2020		21,856
Actual revenue		16,825
Amount over (under) allowable amount		$ (5,031)

This page intentionally left blank

HINTON BURDICK
CPAs & ADVISORS

Findings and Recommendations
For the Fiscal Year Ended June 30, 2020

The Honorable Mayor and
City Council
City of West Wendover, Nevada

Professional standards require that we communicate, in writing; deficiencies in internal control over financial reporting that are considered significant deficiencies or material weaknesses that are identified during the audit of the financial statements. Nevada Revised Statutes (NRS) require us to report instances of noncompliance with laws and regulations. During our audit of the City of West Wendover, Nevada for the fiscal year ended June 30, 2020, we noted several improvements in the City's accounting and budgeting system and we wish to commend the City for their achievements. We also observed a few areas needing corrective action in order for the City to be in compliance with laws and regulations as well as a few areas that, if improved, would strengthen the City's accounting system and control over its assets. These items are discussed below for your consideration.

INTERNAL CONTROL OVER FINANCIAL REPORTING:

Material Weakness:

No items noted

Significant Deficiencies:

No items noted

COMPLIANCE AND OTHER MATTERS:

Compliance:

2020-001 Tentative Budget

Criteria: NRS 354.596 requires that the City submit the tentative budget and notice of hearing to the County Clerk and the Department of Taxation on or before April 15.

Condition: The tentative budget and notice were not submitted until after April 15.

Cause: The City has not designed and implemented controls to ensure compliance with NRS 354.596.

Effect: The City did not comply with NRS 354.596.

Recommendation: We recommend that the City consider procedures to ensure the tentative budget and notice are submitted to the County Clerk and Department of Taxation on or before April 15.

Other Matters:

2019-001 Sewer Fund USDA Debt Covenants

Criteria: The USDA Series 2012 Sewer Bond covenants require certain ratios and metrics be maintained per the bond agreement.

Condition: We noted that the Sewer Fund is out of compliance with USDA debt covenants and required ratios.

Cause: The Sewer Fund did not have enough income from operations to cover the next year's debt service requirement. It appears the City did not follow and update established controls to ensure compliance with the criteria above.

Effect: The City is not in compliance with the bond covenants required by the USDA.

Recommendation: We recommend the City look at ways to increase revenues and reserves or decrease operating expenses in order to become compliant with the USDA debt covenants of the Sewer Bond and to update controls to ensure compliance with the debt covenants.

Responses

Please respond to the above Findings and Recommendations in letter form.

This report is intended solely for the information and use of the City Council, management, and various federal and state agencies and is not intended to be and should not be used by anyone other than these specified parties. However, this report is a matter of public record and its distribution is not limited.

It has been a pleasure to be of service to the City this past year. We would like to express special thanks to all those who assisted us so efficiently in this year's audit. We invite you to ask questions of us throughout the year as you feel necessary. We look forward to a continued professional relationship.

Sincerely,

Hinton Burdick, PLLC

HintonBurdick, PLLC
November 2, 2020

CITY OF WEST WENDOVER

P.O. Box 2825 • 1111 N. Gene L. Jones Way • West Wendover, NV 89883
Office (775) 664-3081 Fax (775) 664-3720

November 30, 2020

State of Nevada
Department of Taxation
1550 College Parkway, Suite 115
Attn: Keri Gransbery
Carson City NV 89706-7937

RE: Annual Audit Report – Fiscal Year 2020 - Corrective Action Plan

Dear Keri,

As requested by the State of Nevada - Department of Taxation, and in an effort to correct Compliance and Other Matters, per pages 89-90 of the City of West Wendover Financial Statements, the City submits the following:

On December 15, 2020, the audit firm of Hinton Burdick will present the annual audit for fiscal year 2020, and make the Council aware of two findings. As required, staff will present a corrective action plan for each finding to the Council for its approval at that same meeting. Each finding and the plan of corrective action for each finding are outlined below.

Finding number one, 2020-001, addresses a 'Tentative Budget' compliance issue in violation of NRS 354.596 which requires that the tentative budget and notice of hearing be submitted to the County Clerk office on or before April 15. For FY19-20, the tentative budget was not submitted by April 15. This occurred because the City was without a CFO for approximately 6 months before a new CFO was hired. The new CFO worked to catch up on deadlines of numerous outstanding items while also working on the budget. The FY19-20 budget was submitted two days after the deadline. Conversely, in the following year, the FY20-21 budget was submitted on time.

Corrective Action Plan - Staff will work diligently to continue submitting the tentative budget by April 15 each year.

Finding number two, 2019-001, addresses non-compliance on USDA Debt Covenants, specifically the Series 2012 Sewer Bond. The sewer fund is required to have enough income from operations to cover the next year's debt service. On April 7, 2009, the city Council voted to increase sewer fees by 6%, effective July 1, 2009, and by 3% at the beginning of each fiscal year thereafter, until such time the Council felt the automatic increases were no longer necessary. Staff was monitoring the fund but when COVID-19 hit, it had a negative impact on the fund's revenues and net income.

Corrective Action Plan - Staff will continue monitoring the fund and if necessary consider another review of the sewer fees to try and meet the debt service coverage ratio and the current ratio as required in the bond covenants.

Thank you,

Debbie Sanchez

Debbie Sanchez
Chief Financial Officer

"The City of West Wendover is an equal opportunity provider."

FINANCIAL STATEMENTS

FOR THE FISCAL YEAR ENDED JUNE 30, 2019

WITH REPORT OF

INDEPENDENT CERTIFIED PUBLIC ACCOUNTANTS

CITY OF WEST WENDOVER, NEVADA

Table of Contents

Page

FINANCIAL SECTION

Independent Auditors' Report....1

Management's Discussion and Analysis....5

Basic Financial Statements:

Government-wide Financial Statements:

Statement of Net Position....14

Statement of Activities....15

Fund Financial Statements:

Balance Sheet – Governmental Funds....16

Reconciliation of the Balance Sheets of Governmental Funds to the Statement of Net Position....17

Statement of Revenues, Expenditures, and Changes in Fund Balances – Governmental Funds....18

Reconciliation of the Statement of Revenues, Expenditures, and Changes in Fund Balances of Governmental Funds to the Statement of Activities....19

Statement of Net Position – Proprietary Funds....20

Statement of Revenues, Expenses, and Changes in Net Position – Proprietary Funds....21

Statement of Cash Flows – Proprietary Funds....22

Notes to the Financial Statements....23

Required Supplementary Information:

Schedules of Revenues, Expenditures, and Changes in Fund Balances – Budget and Actual

General Fund (Detailed)....56

Recreation Fund....59

Schedule of the Proportionate Share of the Net Pension Liability....60

Schedule of Contributions....61

CITY OF WEST WENDOVER, NEVADA

Table of Contents (Continued)

Supplementary Information

Combining and Individual Fund Statements and Schedules:
Combining Balance Sheet – Non-major Governmental Funds 64

Combining Statement of Revenues, Expenditures and Changes in
Fund Balances – Non-major Governmental Funds 65

Nonmajor Governmental Fund Schedules of Revenues, Expenditures, and
Changes in Fund Balances – Budget and Actual

Seizure Forfeiture Fund 66
Court Administrative Assessments Fund.....67
Welcome Center Fund 68
Wendover Will Landmark Fund 69
Grant Fund 70
Capital Projects Fund.....71
Ad Valorem Capital Projects Fund 72

Major Business-Type Funds:
Water fund:
Schedule of Revenues, Expenses – Budget and Actual 74
Sewer fund:
Schedule of Revenues, Expenses – Budget and Actual 75
Garbage / Compost Facility fund:
Schedule of Revenues, Expenses – Budget and Actual 77

Component Unit Supplementary Schedules:
Statement of Net Position 78
Schedule of Revenues, Expenses – Budget and Actual 79
Statement of Cash Flows 80

OTHER COMMUNICATIONS FROM INDEPENDENT AUDITORS:

Report on Internal Control over Financial Reporting and Compliance 83

Report on Compliance with State Fiscal Laws 85

Schedule of Fees Imposed Subject to the Provision of NRS 354.5989 87

Findings and Recommendations 89

FINANCIAL SECTION

This page intentionally left blank

HINTON BURDICK
CPAs & ADVISORS

Independent Auditors' Report

The Honorable Mayor and City Council
West Wendover, Nevada

Report on the Financial Statements

We have audited the accompanying financial statements of the governmental activities, the business-type activities, the aggregate discretely presented component units, each major fund, and the aggregate remaining fund information of City of West Wendover, Nevada as of and for the year ended June 30, 2019, and the related notes to the financial statements, which collectively comprise the City's basic financial statements as listed in the table of contents.

Management's Responsibility for the Financial Statements

Management is responsible for the preparation and fair presentation of these financial statements in accordance with accounting principles generally accepted in the United States of America; this includes the design, implementation, and maintenance of internal control relevant to the preparation and fair presentation of financial statements that are free from material misstatement, whether due to fraud or error.

Auditor's Responsibility

Our responsibility is to express opinions on these financial statements based on our audit. We conducted our audit in accordance with auditing standards generally accepted in the United States of America and the standards applicable to financial audits contained in *Government Auditing Standards*, issued by the Comptroller General of the United States. Those standards require that we plan and perform the audit to obtain reasonable assurance about whether the financial statements are free from material misstatement.

An audit involves performing procedures to obtain audit evidence about the amounts and disclosures in the financial statements. The procedures selected depend on the auditor's judgment, including the assessment of the risks of material misstatement of the financial statements, whether due to fraud or error. In making those risk assessments, the auditor considers internal control relevant to the entity's preparation and fair presentation of the financial statements in order to design audit procedures that are appropriate in the circumstances, but not for the purpose of expressing an opinion on the effectiveness of the entity's internal control. Accordingly, we express no such opinion. An audit also includes evaluating the appropriateness of accounting policies used and the reasonableness of significant accounting estimates made by management, as well as evaluating the overall presentation of the financial statements.

We believe that the audit evidence we have obtained is sufficient and appropriate to provide a basis for our audit opinions.

Opinions

In our opinion, the financial statements referred to above present fairly, in all material respects, the respective financial position of the governmental activities, the business-type activities, the aggregate discretely presented component units, each major fund, and the aggregate remaining fund information of the City of West Wendover, Nevada, as of June 30, 2019, and the respective changes in financial position, and, where applicable, cash flows thereof for the year then ended in accordance with accounting principles generally accepted in the United States of America.

Other Matters

Required Supplementary Information

Accounting principles generally accepted in the United States of America require that the management's discussion and analysis, budgetary comparison information, the schedule of proportionate share of the net pension liability and the schedule of contributions, as listed in the table of contents, be presented to supplement the basic financial statements. Such information, although not a part of the basic financial statements, is required by the Governmental Accounting Standards Board, who considers it to be an essential part of financial reporting for placing the basic financial statements in an appropriate operational, economic, or historical context. We have applied certain limited procedures to the required supplementary information in accordance with auditing standards generally accepted in the United States of America, which consisted of inquiries of management about the methods of preparing the information and comparing the information for consistency with management's responses to our inquiries, the basic financial statements, and other knowledge we obtained during our audit of the basic financial statements. We do not express an opinion or provide any assurance on the information because the limited procedures do not provide us with sufficient evidence to express an opinion or provide any assurance.

Other Information

Our audit was conducted for the purpose of forming opinions on the financial statements that collectively comprise the City of West Wendover, Nevada's basic financial statements. The major fund budgetary comparison schedules, the combining and individual non-major fund budgetary schedules and component unit supplementary schedules, as listed in the table of contents, are presented for purposes of additional analysis and are not a required part of the basic financial statements.

The major fund budgetary comparison schedules, the combining and individual non-major fund budgetary schedules, and the component unit supplementary schedules as listed in the table of contents, are the responsibility of management and were derived from and relate directly to the underlying accounting and other records used to prepare the basic financial statements. Such information has been subjected to the auditing procedures applied in the audit of the basic financial statements and certain additional procedures, including comparing and reconciling such information directly to the underlying accounting and other records used to prepare the basic financial statements or to the basic financial statements themselves, and other additional procedures in accordance with auditing standards generally accepted in the United States of America. In our opinion, the major fund budgetary comparison schedules, the combining and individual non-major fund budgetary schedules, and the component unit supplementary schedules as listed in the table of contents, are fairly stated in all material respects in relation to the basic financial statements as a whole.

Other Reporting Required by *Government Auditing Standards*

In accordance with *Government Auditing Standards*, we have also issued our report dated October 30, 2019, on our consideration of the City of West Wendover, Nevada's internal control over financial reporting and on our tests of its compliance with certain provisions of laws, regulations, contracts, and grant agreements and other matters. The purpose of that report is to describe the scope of our testing of internal control over financial reporting and compliance and the results of that testing, and not to provide an opinion on internal control over financial reporting or on compliance. That report is an integral part of an audit performed in accordance with *Government Auditing Standards* in considering City of West Wendover, Nevada's internal control over financial reporting and compliance.

HintonBurdick, PLLC
St. George, Utah
October 30, 2019

This page intentionally left blank

CITY OF WEST WENDOVER, NEVADA
MANAGEMENT'S DISCUSSION AND ANALYSIS

As management of the City of West Wendover (City), we offer readers of the City's financial statements this narrative overview and analysis of the financial activities of the City for the fiscal year ended June 30, 2019. Please read it in conjunction with the accompanying basic financial statements.

FINANCIAL HIGHLIGHTS

- Total assets exceed total liabilities (net position) by $26.8 million at the close of the fiscal year.
- Total net position increased by $660 thousand from the prior year.
- Governmental activities net position increased by $475 thousand. Business-type net position increased by $185 thousand.
- Total revenues from all governmental sources were $9.8 million and the total cost of all City programs were $9.3 million
- The General Fund revenues exceeded expenditures, excluding transfers, and debt proceeds by $1.25 million.
- At the end of the current fiscal year, unassigned fund balance for the General Fund was $1,733,797, or 31% of total General Fund expenditures, excluding transfers.

USING THIS ANNUAL REPORT

This annual report consists of a series of financial statements. The three components of the financial statements are: (1) Government-wide financial statements which include the Statement of Net Position and the Statement of Activities. These statements provide information about the activities of the City as a whole. (2) Fund financial statements tell how these services were financed in the short term as well as what remains for future spending. Fund financial statements also report the City's operations in more detail than the government-wide statements by providing information about the City's most significant funds. (3) Notes to the financial statements.

Reporting the City as a Whole

The Statement of Net Position and the Statement of Activities (Government-wide)

A frequently asked question regarding the City's financial health is whether the year's activities contributed positively to the overall financial well-being. The Statement of Net Position and the Statement of Activities report information about the City as a whole and about its activities in a way that helps answer this question. These statements include *all* assets and liabilities using the *accrual basis of accounting*, which is similar to the accounting used by most private-sector companies. All of the current year's revenues and expenses are taken into account regardless of when cash is received or paid.

These two statements report the City's net position and changes in them. Net position, the difference between assets and liabilities, are one way to measure the City's financial health, or financial position. Over time, increases or decreases in net position are an indicator of whether the financial health is improving or deteriorating. However, it is important to consider other non-financial factors such as changes in the City's property tax base or condition of the City's roads to accurately assess the overall health of the City.

The Statement of Net Position and the Statement of Activities, present information about the following:

- Government activities – All of the City's basic services are considered to be governmental activities, including general government, judicial, public safety, community development, health and sanitation, culture and recreation, community support, and interest on long-term debt. Consolidated tax, room tax, ad valorem tax, county gaming tax, franchise tax, right of way tolls, motor vehicle tax, and unrestricted investment earnings finance these activities.

- Proprietary activities/Business type activities – The City charges a fee to customers to cover all or most of the cost of the services provided. The City's water, sewer, and garbage / compost systems are reported in this category.

Reporting the City's Most Significant Funds

Fund Financial Statements

The fund financial statements provide detailed information about the most significant funds—not the City as a whole. Some funds are required to be established by State law and others are established by City resolution or by bond covenants. However, management establishes many other funds which aid in the management of money for particular purposes or meet legal responsibilities associated with the usage of certain taxes, grants, and other money. The City's two kinds of funds, *governmental* and *proprietary*, use different accounting approaches as explained below.

- *Governmental funds* – Most of the City's basic services are reported in governmental funds. Governmental funds focus on how resources flow in and out with the balances remaining at year-end that are available for spending. These funds are reported using an accounting method called the *modified accrual* accounting method, which measures cash and all other *financial* assets that can readily be converted to cash. The governmental fund statements provide a detailed *short-term view* of the City's general government operations and the basic services it provides. Government fund information shows whether there are more or fewer financial resources that can be spent in the near future to finance the City's programs. We describe the relationship (or differences) between governmental *activities* (reported in the Statement of Net Position and the Statement of Activities) and governmental *funds* in a reconciliation included with the Basic Financial Statements.

- *Proprietary funds* – The City maintains enterprise and internal service funds under this category. Enterprise funds are used to account for functions presented in the business-type section of the government-wide financial statements. Internal service funds are used to account for the financing of goods or services provided by one department or agency to other departments or agencies of the government.

Notes to the Financial Statements

Notes to the financial statements are included to provide information that is crucial to the full and complete understanding of the data provided in the financial statements.

GOVERNMENT-WIDE FINANCIAL ANALYSIS

Net position may serve over time as a useful indicator of the City's financial position. The City's combined assets exceed liabilities by $26.8 million as of June 30, 2019 as shown in the following condensed statement of net position. The City has chosen to account for its water, sewer, and garbage/compost operations in enterprise funds which are shown as Business Activities.

City of West Wendover, Nevada
Statement of Net Position

	Governmental activities		Business-type activities		Combined Total	
Assets	06/30/19	06/30/18	06/30/19	06/30/18	06/30/19	06/30/18
Current and other assets	$ 3,150,117	$ 2,238,108	$ 6,200,377	$ 5,789,930	$ 9,350,494	$ 8,028,038
Net capital assets	20,271,396	21,295,126	18,290,392	19,288,460	38,561,788	40,583,586
Total assets	23,421,513	23,533,234	24,490,769	25,078,390	47,912,282	48,611,624
Deferred outflows	1,256,937	1,242,559	255,908	244,359	1,512,845	1,486,918
Liabilities						
Current liabilities	566,897	562,992	139,589	149,129	706,486	712,121
Long-term liabilities outstanding	13,014,448	13,421,798	8,151,132	8,872,437	21,165,580	22,294,235
Total liabilities	13,581,345	13,984,790	8,290,721	9,021,566	21,872,066	23,006,356
Deferred inflows	617,032	794,117	125,625	156,171	742,657	950,288
Net position:						
Net investment in capital assets	14,520,364	14,929,697	13,776,382	14,106,662	28,296,746	29,036,359
Restricted	187,326	207,131	952,807	964,944	1,140,133	1,172,075
Unrestricted	(4,226,865)	(5,139,942)	1,601,142	1,073,406	(2,625,723)	(4,066,536)
Total net position	$ 10,480,825	$ 9,996,886	$ 16,330,331	$ 16,145,012	$ 26,811,156	$ 26,141,898

Governmental Activities

The cost of all Governmental activities this year was $9,357,146. As shown on the statement of Changes in Net Position on the following page, $635,428 of this cost was paid for by those who directly benefited from the programs; $630,321 was subsidized by grants received from other governmental organizations for both capital and operating activities. Overall governmental program revenues, including intergovernmental aid and fees for services were $1,265,749. General taxes, asset sales, and other general revenues totaled $8,566,673.

The City's programs include: general government, judicial, public safety, public works, community development, health and sanitation, culture and recreation, community support, and interest on long-term debt. Each programs' total cost is presented below.

City of West Wendover, Nevada
Changes in Net Position

	Governmental activities		Business-type activities		Combined Total	
	06/30/19	06/30/18	06/30/19	06/30/18	06/30/19	06/30/18
Revenues:						
Program revenues:						
Charges for services	$ 635,428	$ 624,342	$ 3,961,674	$ 3,765,125	$ 4,597,102	$ 4,389,467
Operating grants	442,032	337,594	-	-	442,032	337,594
Capital grants	188,289	192,538	118,910	27,721	307,199	220,259
General revenues:						
Consolidated taxes	2,844,516	2,760,581	-	-	2,844,516	2,760,581
Room taxes	2,242,802	2,389,961	-	-	2,242,802	2,389,961
Ad valorem taxes	1,657,933	1,629,060	-	-	1,657,933	1,629,060
County gaming taxes	429,278	457,909	-	-	429,278	457,909
Franchise taxes	397,860	397,894	-	-	397,860	397,894
Right of way toll	316,050	290,142	-	-	316,050	290,142
Motor vehicle taxes	107,775	111,452	-	-	107,775	111,452
Other taxes	-	5,485	-	-	-	5,485
Investment earnings	13,580	7,317	131,644	124,294	145,224	131,611
Gain on sale of capital assets	543,253	-	-	-	543,253	-
Miscellaneous revenues	6,684	30,009	25,375	32,811	32,059	62,820
Total revenues	9,825,480	9,234,284	4,237,603	3,949,951	14,063,083	13,184,235
Expenses:						
General government	1,708,015	1,957,253	-	-	1,708,015	1,957,253
Judicial	393,422	339,053	-	-	393,422	339,053
Public safety	3,192,139	3,327,123	-	-	3,192,139	3,327,123
Public works	555,232	527,048	-	-	555,232	527,048
Community development	404,510	417,780	-	-	404,510	417,780
Health and sanitation	142,372	140,732	-	-	142,372	140,732
Culture and recreation	2,384,928	2,504,678	-	-	2,384,928	2,504,678
Community support	332,535	280,647	-	-	332,535	280,647
Interest on long term debt	229,140	248,774	-	-	229,140	248,774
Water	-	-	1,414,509	1,380,771	1,414,509	1,380,771
Sewer	-	-	1,625,719	1,592,175	1,625,719	1,592,175
Garbage/Compost	-	-	1,012,056	1,054,200	1,012,056	1,054,200
Total expenses	9,342,293	9,743,088	4,052,284	4,027,146	13,394,577	13,770,234
Increase in net position before transfers	483,187	(508,804)	185,319	(77,195)	668,506	(585,999)
Transfers	-	-	-	-	-	-
Increase in net position	483,187	(508,804)	185,319	(77,195)	668,506	(585,999)
Net position, beginning	9,996,886	11,091,797	16,145,012	16,332,520	26,141,898	27,424,317
Restatement adjustment	-	(586,107)	-	(110,313)	-	(696,420)
Net position, ending	$ 10,480,073	$ 9,996,886	$ 16,330,331	$ 16,145,012	$ 26,810,404	$ 26,141,898

Total resources available during the year to finance governmental operations were $19,829,308 consisting of Net Position at July 1, 2018 of $10 million, program revenues of $1.3 million and General Revenue of $8.6 million. Total cost of Governmental Activities during the year were $9.3 million; thus, Governmental Net Position increased by $475,276 to $10.4 million.

The following graphs compare program expenses to program revenues and provide a breakdown of revenues by source for all government activities. The charts below are derived from the Statement of Activities on page 15.

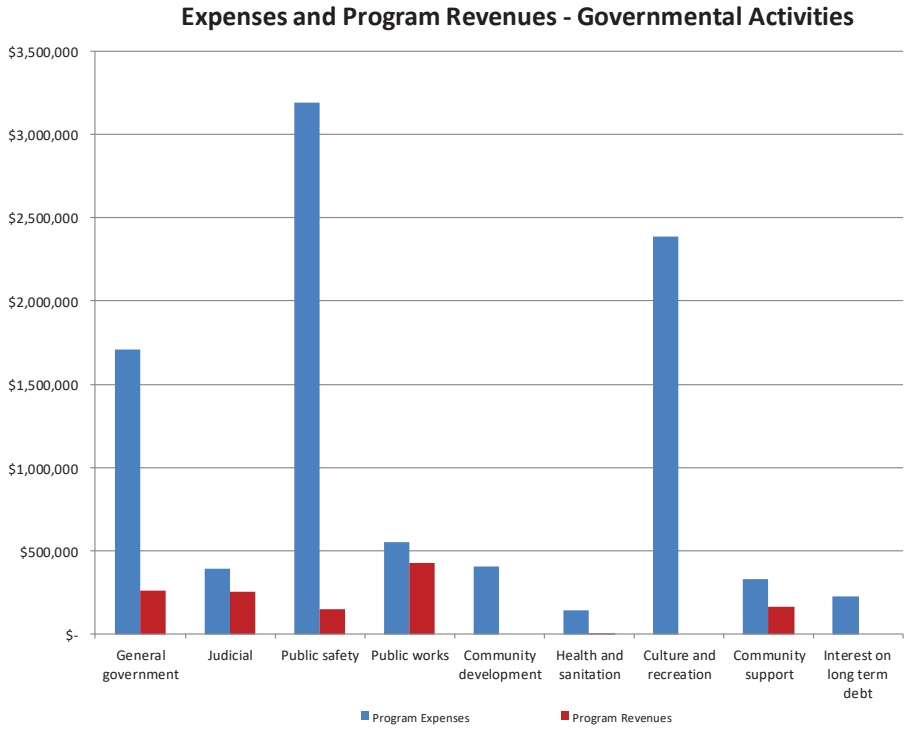

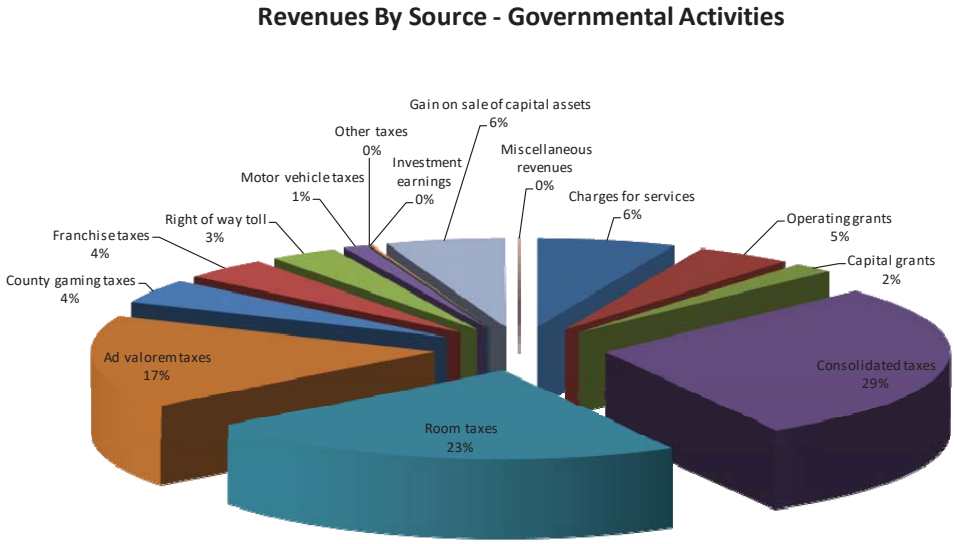

Business Type Activities

Net position of the Business Type activities at June 30, 2019, as reflected in the Statement of Net Position was $16.3 million. The cost of providing all Proprietary (Business Type) activities this year was $4.0 million. As shown in the Statement of Activities, the amounts paid by users of the system were $3.9 million and $118,910 was subsidized by capital grants and contributions. Unrestricted investment earnings totaled 131,644; other revenue totaled $25,375, thus, net position increased by $185,319.

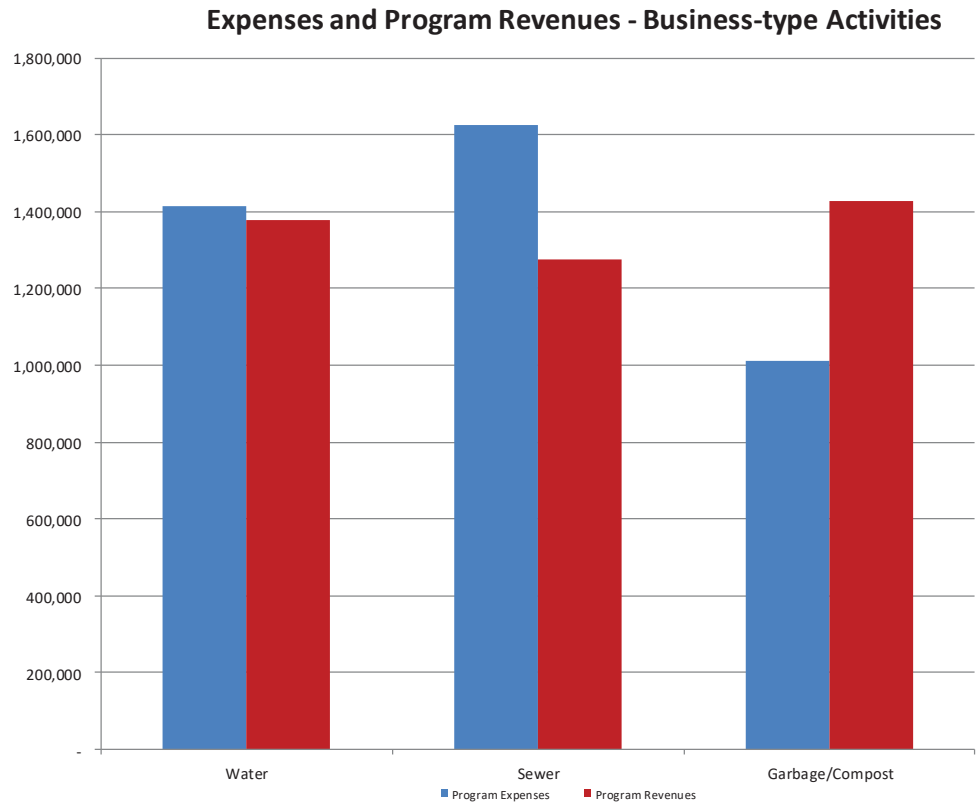

Financial Analysis of the Government's Funds

As noted earlier, the City of West Wendover uses fund accounting to ensure and demonstrate compliance with finance-related legal requirements.

Governmental funds: The focus of the City of West Wendover's governmental funds is to provide information on near-term inflows, outflows, and balances of spendable resources. Such information is useful in assessing the City of West Wendover's financing requirements. In particular, unassigned fund balance may serve as a useful measure of a government's net resources available for spending at the end of the fiscal year.

As of the end of the current fiscal year, the City of West Wendover's governmental funds reported combined ending fund balances of $2,631,350, an increase of $1,012,406 in comparison with the prior year. 67% of the total fund balance or $1,733,797 constitutes unassigned fund balance, which is available for new spending at the government's discretion. The remainder of the fund balance is non-spendable, restricted, or committed because it has already been committed 1) to pay debt service, 2) to pay for capital improvements or 3) for a variety of other restricted or committed purposes.

The general fund is the chief operating fund of the City of West Wendover. At the end of the current fiscal year, unassigned fund balance in the general fund was $1,733,797, and total fund balance is $1,901,261. As a measure of liquidity, it may be useful to compare both unassigned fund balance and total fund balance to total fund expenditures. Total unassigned fund balance represents 31% of total general fund expenditures. During the year, the City of West Wendover's general fund balance was budgeted to decrease by $31,690

The recreation fund has a fund balance of $134,563, all of which is restricted for culture and recreation appropriation.

Proprietary funds: The City of West Wendover's proprietary funds provide the same type of information found in the government-wide financial statements, but in more detail. Total net position of the proprietary funds was $16,330,331 at year end.

General Fund Budgetary Highlights

Actual expenditures for the General Fund at year-end were $677,876 less than the final budget. The favorable budget to actual variance in appropriations was principally due to overall savings in services and supplies for all departments. Actual revenues were more than the final budget by $236,140.

CAPITAL ASSET AND DEBT ADMINISTRATION

Capital Assets

The capital assets of the City are those assets that are used in performance of City functions including infrastructure assets. Capital Assets include equipment, buildings, land, park facilities and roads. At the end of fiscal year 2019, net capital assets of the government activities totaled $20.3 million and the net capital assets of the business-type activities totaled $18.3 million. Depreciation on governmental-type capital assets is recognized in the Government-Wide financial statements. (See note 6 to the financial statements.)

Long Term Liabilities

At year-end, the City had $13 million in governmental type long term liabilities, and $8.2 million in proprietary long term liabilities. The liabilities amounts to $4,713 per capita (4,498 – 2013 population US Census Bureau Website 2013). The City's net decrease in total long term liabilities was $1.3 million. (See note 7 and 18 to the financial statements for detailed descriptions.)

NEXT YEAR'S BUDGET AND ECONOMIC FACTORS

In considering the City Budget for fiscal year 2019-2020, the City Council and management continue to remain cautious as to the growth of revenues and expenditures especially in the projection of new revenues from marijuana cultivation and production.

The City is in the second year of its Collective Bargaining Agreement with the Police Officers Association, effective July 1, 2018 thru June 30, 2021, which provides for an annual, fiscal-year Merit Bonus of up to two percent (2%) in wages, based on performance evaluations. A two year labor agreement was negotiated with Local 4041, effective July 1, 2019 thru June 30, 2021. It provides for an annual, fiscal-year increase in wages of two percent (2%) for all classifications, with the exception of dispatchers and the lead dispatcher. Dispatcher and lead dispatcher classifications shall have an annual fiscal-year increase of four percent (4%).
Projects that are reflected in the City Budget for the fiscal year 2019-2020 are as follows:

- The largest project reflected in the City Budget for fiscal year 2019-2020 continues to be the City Center/Downtown development with infrastructure costs estimated to be approximately $3.4M. Additionally the acquisition of BLM land surrounding City Hall, to build a new fire station; project total cost for land and fire station facility estimated at $8.9M.
- The City will continue ongoing Street Rehabilitation and Storm Drainage Improvement Projects

Debt Service

- The City paid off a 1998, $1.280M, USDA Sewer/Compost Revenue Bond in August, 2018
- The City paid off a $232,157 lease purchase agreement in December, 2018
- The City also refinanced the 1998, $3.058M, Water Revenue Bond. The refinance gave the City a net present value cash flow savings of $656,760.

CONTACTING THE CITY'S FINANCIAL MANAGEMENT

This financial report is designed to provide our citizens, taxpayers, customers, investors and creditors with a general overview of the City's finances and to show the City's accountability for the money it receives. If you have questions about this report or need additional financial information, please contact the City's Chief Financial Officer at the City of West Wendover, 1111 N. Gene L. Jones Way, West Wendover, Nevada 89883 or visit us online at http://www.westwendovercity.com

BASIC FINANCIAL STATEMENTS

CITY OF WEST WENDOVER, NEVADA
Statement of Net Position
For the Year Ended June 30, 2019

	Primary Government			Component Unit
	Governmental Activities	Business-type Activities	Total	Johnson Springs
Assets				
Cash and temporary investments	$ 1,686,814	$ 2,493,062	$ 4,179,876	$ 167,071
Accounts receivable, net	1,021,895	412,374	1,434,269	59,314
Due from component unit	-	2,268,160	2,268,160	-
Inventory	37,644	63,242	100,886	13,389
Prepaid items	95,049	10,732	105,781	-
Restricted cash	308,715	952,807	1,261,522	-
Capital assets not being depreciated:				
Land	1,467,432	111,000	1,578,432	18,000
Construction in progress	64,815	-	64,815	-
Capital assets, net of accumulated depreciation:				
Buildings, net	7,948,429	3,440,348	11,388,777	2,445,013
Improvements other than buildings, net	10,429,336	2,572,513	13,001,849	252,297
Machinery and equipment, net	361,384	693,376	1,054,760	182,203
Utility systems	-	11,473,155	11,473,155	3,415,472
Total assets	23,421,513	24,490,769	47,912,282	6,552,759
Deferred Outflows of Resources				
Deferred outflows related to pensions	1,256,937	255,908	1,512,845	30,417
Liabilities				
Accounts payable	336,114	33,797	369,911	53,181
Accrued interest payable	23,810	101,700	125,510	-
Accrued expenses	158,549	-	158,549	1,687
Due to primary government	-	-	-	2,268,160
Unearned revenue	48,424	-	48,424	-
Deposits payable	-	4,092	4,092	-
Noncurrent liabilities				
Due within one year	501,507	533,211	1,034,718	11,155
Due in more than one year	5,572,781	6,204,928	11,777,709	-
Net pension liability	6,940,160	1,412,993	8,353,153	167,949
Total liabilities	13,581,345	8,290,721	21,872,066	2,502,132
Deferred Inflows of Resources				
Deferred inflows related to pensions	617,032	125,625	742,657	14,932
Net Position				
Net investment in capital assets	14,520,364	13,776,382	28,296,746	4,044,825
Restricted for:				
Judicial	52,763	-	52,763	-
Culture and recreation	134,563	-	134,563	-
Debt service	-	952,807	952,807	-
Unrestricted	(4,226,865)	1,601,142	(2,625,723)	21,287
Total net position	$ 10,480,825	$ 16,330,331	$ 26,811,156	$ 4,066,112

The accompanying notes are an integral part of the financial statements.

CITY OF WEST WENDOVER, NEVADA
Statement of Activities
For the Year Ended June 30, 2019

Functions/Programs	Expenses	Program Revenues: Charges for Services	Program Revenues: Operating Grants & Contributions	Program Revenues: Capital Grants & Contributions	Net (Expense) Revenue and Changes in Net Position: Governmental Activities	Net (Expense) Revenue and Changes in Net Position: Business-Type Activities	Net (Expense) Revenue and Changes in Net Position: Total	Component Unit Johnson Springs
Governmental:								
General government	$ 1,708,015	$ 263,406	$ -	$ -	$ (1,444,609)	$ -	$ (1,444,609)	$ -
Judicial	393,422	256,871	-	-	(136,551)	-	(136,551)	-
Public safety	3,192,139	24,018	123,896	-	(3,044,225)	-	(3,044,225)	-
Public works	555,232	83,891	155,000	188,289	(128,052)	-	(128,052)	-
Community development	404,510	-	-	-	(404,510)	-	(404,510)	-
Health and sanitation	142,372	3,462	-	-	(138,910)	-	(138,910)	-
Culture and recreation	2,384,928	-	-	-	(2,384,928)	-	(2,384,928)	-
Community support	332,535	3,780	163,136	-	(165,619)	-	(165,619)	-
Interest on long term debt	229,140	-	-	-	(229,140)	-	(229,140)	-
Total governmental activities	9,342,293	635,428	442,032	188,289	(8,076,544)	-	(8,076,544)	-
Business-type:								
Water	1,414,509	1,311,566	-	66,586	-	(36,357)	(36,357)	-
Sewer	1,625,719	1,223,089	-	52,324	-	(350,306)	(350,306)	-
Garbage/Compost	1,012,056	1,427,019	-	-	-	414,963	414,963	-
Total business-type activities	4,052,284	3,961,674	-	118,910	-	28,300	28,300	-
Total primary government	$ 13,394,577	$ 4,597,102	$ 442,032	$ 307,199				
Component Unit:								
Johnson Springs	$ 929,964	$ 687,579	$ -	$ -				(242,385)
General Revenues:								
Consolidated taxes					2,844,516	-	2,844,516	-
Room taxes					2,242,802	-	2,242,802	-
Ad valorem taxes					1,657,933	-	1,657,933	-
County gaming taxes					429,278	-	429,278	-
Franchise taxes					397,860	-	397,860	-
Right of way toll					316,050	-	316,050	-
Motor vehicle taxes					107,775	-	107,775	-
Investment earnings					13,580	131,644	145,224	31,687
Gain on sale of capital assets					543,253	-	543,253	-
Miscellaneous revenues					6,684	25,375	32,059	12,001
Total general revenues and transfers					8,559,731	157,019	8,141,438	43,688
Change in net position					483,187	185,319	668,506	(198,697)
Net position - beginning					9,996,886	16,145,012	26,141,898	4,264,809
Net position - ending					$ 10,480,073	$ 16,330,331	$ 26,810,404	$ 4,066,112

The accompanying notes are an integral part of the financial statements.

CITY OF WEST WENDOVER, NEVADA
Balance Sheet
Governmental Funds
June 30, 2019

	General Fund	Recreation Fund	Nonmajor Governmental Funds	Total Governmental Funds
Assets				
Cash and temporary investments	$ 1,193,589	$ 124,672	$ 243,700	$ 1,561,961
Accounts receivable, net	17	180,683	-	180,700
Due from other funds	160,000	-	-	160,000
Due from other governments	751,319	-	69,174	820,493
Inventory	36,339	-	1,305	37,644
Prepaid and other items	29,547	-	-	29,547
Restricted cash	440	-	308,275	308,715
Total assets	2,171,251	305,355	$ 622,454	$ 3,099,060
Liabilities				
Accounts payable	$ 63,017	$ 170,792	$ 26,928	$ 260,737
Accrued liabilities	158,549	-	-	158,549
Unearned revenue	48,424	-	-	48,424
Total liabilities	269,990	170,792	26,928	467,710
Fund Balances				
Nonspendable	65,886	-	1,305	67,191
Restricted	440	134,563	584,699	719,702
Committed	101,138	-	9,522	110,660
Unassigned	1,733,797	-	-	1,733,797
Total fund balances	1,901,261	134,563	595,526	2,631,350
Total liabilities and fund balances	$ 2,171,251	$ 305,355	$ 622,454	$ 3,099,060

The accompanying notes are an integral part of the financial statements.

CITY OF WEST WENDOVER, NEVADA
Reconciliation of the Balance Sheets of Governmental Funds
To the Statement of Net Position
For the Year Ended June 30, 2019

Total fund balances - governmental funds		$ 2,631,350
Amounts reported for governmental activities in the statement of net position are different because:		
Capital assets used in governmental activities are not financial resources and therefore are not reported in the funds.		
Governmental capital assets	$ 30,850,026	
Accumulated depreciation	(10,578,630)	
		20,271,396
Long-term receivables in the governmental activities are not reported in the funds.		5,097
Long-term liabilities are not due and payable in the current period and therefore are not reported in the funds.		
Net pension liabilities	$ (6,940,160)	
Bonds payable	(5,751,031)	
Capital leases payable	-	
Compensated absences	(322,505)	
Interest payable	(23,810)	
		(13,037,506)
The internal service fund is used by management to charge the cost of insurance to individual funds. The assets and liabilities of the internal service funds are included in the governmental activities in the statement of net position.		(29,417)
Deferred outflows and inflows of resources related to pensions are applicable to future reporting periods and, therefore, are not reported in the funds.		
Deferred outflows	$ 1,256,937	
Deferred inflows	(617,032)	
		639,905
Total net position - governmental activities		$ 10,480,825

The accompanying notes are an integral part of the financial statements.

CITY OF WEST WENDOVER, NEVADA
Statement of Revenues, Expenditures and Changes in Fund Balances
Governmental Funds
For the Year Ended June 30, 2019

	General Fund	Recreation Fund	Nonmajor Governmental Funds	Total Governmental Funds
Revenues				
Taxes	$ 1,534,368	$ 2,242,802	$ 48,464	$ 3,825,634
Licenses and permits	1,023,155	-	-	1,023,155
Intergovernmental	3,949,151	-	145,000	4,094,151
Charges for services	39,400	-	8,633	48,033
Fines and forfeits	67,938	-	-	67,938
Miscellaneous revenues	217,188	-	722,703	939,891
Total revenues	6,831,200	2,242,802	924,800	9,998,802
Expenditures				
Current				
General government	1,106,714	-	-	1,106,714
Judicial	370,650	-	5,837	376,487
Public safety	3,074,370	-	-	3,074,370
Public works	545,435	-	-	545,435
Community development	263,162	-	-	263,162
Health	117,474	-	-	117,474
Culture and recreation	14,474	2,265,856	-	2,280,330
Community support	35,269	-	291,732	327,001
Capital outlay	-	-	45,015	45,015
Debt service	55,401	-	795,007	850,408
Total expenditures	5,582,949	2,265,856	1,137,591	8,986,396
Excess (deficiency) of revenues over (under) expenditures	1,248,251	(23,054)	(212,791)	1,012,406
Other Financing Sources (Uses)				
Transfers in	-	-	451,500	451,500
Transfers out	(401,500)	-	(50,000)	(451,500)
Total other financing sources and uses	(401,500)	-	401,500	-
Net change in fund balances	846,751	(23,054)	188,709	1,012,406
Fund balances, beginning of year	1,054,510	157,617	406,817	1,618,944
Fund balances, end of year	$ 1,901,261	$ 134,563	$ 595,526	$ 2,631,350

The accompanying notes are an integral part of the financial statements.

CITY OF WEST WENDOVER, NEVADA
Reconciliation of the Statement of Revenues,
Expenditures, and Changes in Fund Balances of Governmental Funds
To the Statement of Activities
For the Year Ended June 30, 2019

Amounts reported for governmental activities in the statement of activities are different because:		
Net change in fund balances - total governmental funds		$ 1,012,406
Governmental funds report capital outlays as expenditures. However, in the statement of activities, the costs of those assets is allocated over their estimated useful lives and reported as depreciation expense. This is the amount by which capital outlay exceeded depreciation in the current period.		
Capital outlay	$ 165,807	
Depreciation expense	(1,019,686)	
		(853,879)
Governmental funds report the gross proceeds from the sale of capital assets as revenue. However, in the statement of activities, the gain/(loss) on the sale of capital assets is reported net of its net book value.		(169,852)
Payments on long term receivables recorded as revenue in the governmental funds are reported as a reduction of receivables in the statement of net position.		(3,471)
Repayment of bond principal is an expenditure in the governmental funds, but the repayment reduces long-term liabilities in the statement of net position.		613,646
Accrued interest for long-term debt is not reported as an expenditure for the current period while it is recorded in the statement of activities. The adjustment reflects the change in interest payable		7,622
Pension contributions are reported as expenditures in the governmental funds when made. However, they are reported as deferred outflows of resources in the Statement of Net Position because the net pension liability is measured a year before the City's report date. Pension expense, which is the change in the net pension liability adjusted for changes in deferred outflows and inflows of resources related to pension, is reported in the Statement of Activities.		
Pension contributions	$ 443,888	
Pension expense	(424,169)	
		19,719
Compensated absences expenses reported in the statement of activities do not require the use of current financial resources and therefore are not reported as expenditures in the governmental funds. This adjustment reflects the change in compensated absences payable.		(34,551)
The internal service fund is used by management to charge the cost of insurance to the various funds. The net revenue (loss) of the internal service fund is reported with governmental activities.		(108,453)
Change in net position of governmental activities		$ 483,187

The accompanying notes are an integral part of the financial statements.

CITY OF WEST WENDOVER, NEVADA
Statement of Net Position
Proprietary Funds
For the Year Ended June 30, 2019

	Water Fund	Sewer Fund	Garbage/ Compost Fund	Total Proprietary Funds	Health Insurance Internal Service Fund
Assets					
Current assets					
Cash and investments	$ 1,363,955	$ 150,320	$ 978,787	$ 2,493,062	$ 124,853
Accounts receivable, net	137,869	129,241	145,264	412,374	15,605
Inventory	59,121	4,121	-	63,242	-
Prepaid expenses	1,976	7,705	1,051	10,732	65,502
Total current assets	1,562,921	291,387	1,125,102	2,979,410	205,960
Noncurrent assets					
Restricted cash	639,924	88,095	224,788	952,807	-
Due from component unit	2,268,160	-	-	2,268,160	-
Capital assets:					
Land	111,000	-	-	111,000	-
Buildings	1,277,649	1,166,887	1,535,458	3,979,994	-
Improvements other than buildings	966,221	76,600	5,164,633	6,207,454	-
Machinery and equipment	869,063	1,393,360	2,190,753	4,453,176	-
Utility system	2,214,669	15,820,916	-	18,035,585	-
Less accumulated depreciation	(2,300,969)	(6,736,123)	(5,459,725)	(14,496,817)	-
Total noncurrent assets	6,045,717	11,809,735	3,655,907	21,511,359	-
Total assets	7,608,638	12,101,122	4,781,009	24,490,769	205,960
Deferred Outflows of Resources					
Deferred outflows related to pensions	73,699	94,815	87,394	255,908	-
Liabilities					
Current liabilities					
Accounts payable	6,494	7,345	19,958	33,797	75,377
Accrued interest payable	75,894	10,725	15,081	101,700	-
Due to other funds	-	-	-	-	160,000
Compensated absences	7,853	10,498	6,962	25,313	-
Customer deposits	4,092	-	-	4,092	-
Current portion of noncurrent liabilities	151,405	116,077	240,416	507,898	-
Total current liabilities	245,738	144,645	282,417	672,800	235,377
Noncurrent liabilities:					
Capital leases payable	-	-	139,148	139,148	-
Net pension liability	406,929	523,522	482,542	1,412,993	-
Bonds payable	3,143,270	2,605,845	316,665	6,065,780	-
Total noncurrent liabilities	3,550,199	3,129,367	938,355	7,617,921	-
Total liabilities	3,795,937	3,274,012	1,220,772	8,290,721	235,377
Deferred Inflows of Resources					
Deferred inflows related to pensions	36,179	46,545	42,901	125,625	-
Net Position					
Net investment in capital assets	2,041,774	8,999,718	2,734,890	13,776,382	-
Restricted for debt service	639,924	88,095	224,788	952,807	-
Unrestricted	1,168,523	(212,433)	645,052	1,601,142	(29,417)
Total net position	$ 3,850,221	$ 8,875,380	$ 3,604,730	$ 16,330,331	$ (29,417)

The accompanying notes are an integral part of the financial statements.

CITY OF WEST WENDOVER, NEVADA
Statement of Revenues, Expenses, and Changes in Net Position
Proprietary Funds
For the Year Ended June 30, 2019

	Water Fund	Sewer Fund	Garbage/ Compost Fund	Total Proprietary Funds	Health Insurance Internal Service Fund
Operating revenues					
Charges for services	$ 1,311,566	$ 1,223,089	$ 1,427,019	$ 3,961,674	$ 841,673
Operating expenses					
Water purchases	528,129	-	-	528,129	-
Salaries and wages	114,733	335,705	277,179	727,617	-
Employee benefits	213,542	183,735	143,187	540,464	950,126
Services and supplies	287,440	475,062	223,840	986,342	-
Capital outlay	124	-	6,240	6,364	-
Depreciation and amortization	138,001	554,965	335,366	1,028,332	-
Total operating expenses	1,281,969	1,549,467	985,812	3,817,248	950,126
Operating income (loss)	29,597	(326,378)	441,207	144,426	(108,453)
Nonoperating revenues (expenses)					
Interest income	123,037	2,062	6,545	131,644	-
Impact fees	66,586	52,324	-	118,910	
Miscellaneous income	9,920	2,349	2,522	14,791	-
Contributions from component unit for debt payments	10,584	-	-	10,584	-
Interest expense	(132,540)	(76,252)	(26,244)	(235,036)	-
Total nonoperating revenues (expenses)	77,587	(19,517)	(17,177)	40,893	-
Income before contributions and transfers	107,184	(345,895)	424,030	185,319	(108,453)
Change in net position	107,184	(345,895)	424,030	185,319	(108,453)
Total net position, beginning	3,743,037	9,221,275	3,180,700	16,145,012	79,036
Total net position, end of year	$ 3,850,221	$ 8,875,380	$ 3,604,730	$ 16,330,331	$ (29,417)

The accompanying notes are an integral part of the financial statements.

CITY OF WEST WENDOVER, NEVADA
Statement of Cash Flows
Proprietary Funds
June 30, 2019

	Water Fund	Sewer Fund	Garbage/ Compost Fund	Total Proprietary Funds	Health Insurance Internal Service Fund
Cash Flows From Operating Activities:					
Cash received from customers, service fees	$ 1,306,598	$ 1,217,651	$ 1,413,952	$ 3,938,201	$ 826,068
Cash paid to suppliers	(811,979)	(480,855)	(215,194)	(1,508,028)	(888,203)
Cash paid to employees	(314,027)	(494,759)	(425,342)	(1,234,128)	-
Net cash flows from operating activities	180,592	242,037	773,416	1,196,045	(62,135)
Cash Flows From Noncapital Financing Activities:					
Net component unit receipts/(payments)	80,069	-	-	80,069	-
Cash received from miscellaneous sources	9,920	2,349	2,522	14,791	-
Net cash flows from noncapital financing activities	89,989	2,349	2,522	94,860	-
Cash Flows From Capital and Related Financing Activities:					
Impact fees	66,586	52,324	-	118,910	-
Principal paid on capital debt	(313,564)	(110,999)	(372,793)	(797,356)	-
Interest paid on capital debt	(140,635)	(76,559)	(36,546)	(253,740)	-
Acquisition and construction of capital assets	-	(14,161)	(16,104)	(30,265)	-
Net cash flows from capital and related financing activities	(387,613)	(149,395)	(425,443)	(962,451)	-
Cash Flows From Investing Activities:					
Interest income	123,037	2,062	6,545	131,644	-
Net change in cash and cash equivalents	6,005	97,053	357,040	460,098	(62,135)
Cash and investments, including restricted cash, beginning of year as restated	1,997,874	141,362	846,535	2,985,771	186,988
Cash and Cash Equivalents, Including Restricted Cash , End of Year	$ 2,003,879	$ 238,415	$ 1,203,575	$ 3,445,869	$ 124,853
Reconciliation of operating income to net cash flows from operating activities:					
Operating income (loss)	$ 29,597	$ (326,378)	$ 441,207	$ 144,426	$ (108,453)
Adjustments to reconcile net income (loss) to net cash from operating activities					
Depreciation/amortization	138,001	554,965	335,366	1,028,332	-
Pension expense	41,769	55,816	32,616	130,201	-
Employer pension contributions	(26,027)	(33,484)	(30,865)	(90,376)	-
Changes in operating assets and liabilities:					
(Increase) decrease in receivables	(4,272)	(5,438)	(13,067)	(22,777)	(15,605)
(Increase) decrease in inventory	2,284	141	-	2,425	-
(Increase) decrease in prepaid expenses	-	545	(27)	518	1,815
Increase (decrease) in accounts payable	1,430	(6,479)	14,913	9,864	60,108
Increase (decrease) in due from deposits	(696)	-	-	(696)	-
Increase (decrease) in compensated absences	(1,494)	2,349	(6,727)	(5,872)	-
Net cash flows from operating activities	$ 180,592	$ 242,037	$ 773,416	$ 1,196,045	$ (62,135)

The accompanying notes are an integral part of the financial statements.

NOTE 1. Summary of Significant Accounting Policies

Description of government-wide financial statements

The government-wide financial statements (i.e., the statement of net position and the statement of activities) report information on all of the nonfiduciary activities of the primary government and its component units. All fiduciary activities are reported only in the fund financial statements. *Governmental activities*, which normally are supported by taxes, intergovernmental revenues, and other nonexchange transactions, are reported separately from *business-type activities*, which rely to a significant extent on fees and charges to external customers for support. Likewise, the *primary government* is reported separately from certain legally separate *component units* for which the primary government is financially accountable.

Reporting Entity

The City of West Wendover (government) is a municipal corporation governed by an elected mayor and five-member governing council (council). The accompanying financial statements present the government and its component units, entities for which the government is considered to be financially accountable. Blended component units are, in substance, part of the primary government's operations, even though they are legally separate entities. Thus, blended component units are appropriately presented as funds of the primary government. Each discretely presented component unit is reported in a separate column in the government-wide financial statements to emphasize that it is legally separate from the government.

Discretely presented component units - The Johnson Springs Water System Enterprise Fund (Johnson Springs) was formed by a settlement agreement between the City of West Wendover, Nevada and the City of Wendover, Utah to replace Administrative Authority upon its dissolution (dissolved on December 31, 2008). Johnson Springs has no board. The net assets of the Administrative Authority were transferred to Johnson Springs on January 1, 2009, including the debt of the Administrative Authority that is in the name of the City. It is a separate enterprise fund and is considered a component unit due to the City's responsibility to perform all management, maintenance and accounting duties for the fund.

Basis of presentation – government-wide financial statements

While separate government-wide and fund financial statements are presented, they are interrelated. The governmental activities column incorporates data from governmental funds and internal service funds, while business-type activities incorporate data from the government's enterprise funds. Separate financial statements are provided for governmental funds, proprietary funds, and fiduciary funds, even though the latter are excluded from the government-wide financial statements.

As discussed earlier, the city has one discretely presented component units, Johnson Springs, which is considered a major component unit and is shown in separate columns in the government-wide financial statements.

As a general rule, the effect of interfund activity has been eliminated from the government-wide financial statements.

NOTE 1. Summary of Significant Accounting Policies, Continued

Basis of presentation – fund financial statements

The fund financial statements provide information about the government's funds, including its fiduciary funds and blended component units if any. Separate statements for each fund category—governmental, proprietary, and fiduciary—are presented. The emphasis of fund financial statements is on major governmental and enterprise funds, each displayed in a separate column. All remaining governmental and enterprise funds are aggregated and reported as nonmajor funds. Major individual governmental and enterprise funds are reported as separate columns in the fund financial statements.

The government reports the following major governmental funds:

The **General Fund** is the government's primary operating fund. It accounts for all financial resources of the general government, except those accounted for in another fund.

The **Recreation Fund** is used to account for the City's share of room tax proceeds and the distribution of those funds to the recreation district.

The government reports the following major enterprise funds:

The **Water Fund** accounts for the provision of water services to the residents of the City. All activities necessary to provide such services are accounted for in this fund, including, but not limited to, administration, operation, maintenance, financing and related debt service and billing and collection.

The **Sewer Fund** accounts for the provision of sewer services to the residents of the City. All activities necessary to provide such services are accounted for in this fund, including, but not limited to, administration, operation, maintenance, financing and related debt service and billing and collection.

The **Garbage/Compost Fund** is used to account for the provision of sanitation services to residents of the City. All activities necessary to provide such services are accounted for in this fund, including, but not limited to, administration, operation, maintenance, financing and related debt service and billing and collection.

Additionally, the City reports the following fund types:

Health Insurance Internal Service Fund – Internal Service Funds are used to account for the financing of goods and services provided by one department or agency to other departments or agencies of the government and to other government units, on a cost reimbursement basis.

NOTE 1. Summary of Significant Accounting Policies, Continued

During the course of operations the government has activity between funds for various purposes. Any residual balances outstanding at year end are reported as due from/to other funds and advances to/from other funds. While these balances are reported in fund financial statements, certain eliminations are made in the preparation of the government-wide financial statements. Balances between the funds included in governmental activities (i.e., the governmental funds) are eliminated so that only the net amount is included as internal balances in the governmental activities column. Similarly, balances between the funds included in business-type activities (i.e., the enterprise funds) are eliminated so that only the net amount is included as internal balances in the business-type activities column.

Further, certain activity occurs during the year involving transfers of resources between funds. In fund financial statements these amounts are reported at gross amounts as transfers in/out. While reported in fund financial statements, certain eliminations are made in the preparation of the government-wide financial statements. Transfers between the funds included in governmental activities are eliminated so that only the net amount is included as transfers in the governmental activities column. Similarly, balances between the funds included in business-type activities are eliminated so that only the net amount is included as internal balances in the business-type activities column.

Measurement focus and basis of accounting

The accounting and financial reporting treatment is determined by the applicable measurement focus and basis of accounting. Measurement focus indicates the type of resources being measured such *as current financial resources* or *economic resources*. The basis of accounting indicates the timing of transactions or events for recognition in the financial statements.

The government-wide financial statements are reported using the *economic resources measurement* focus and the *accrual basis of accounting*. Revenues are recorded when earned and expenses are recorded when a liability is incurred, regardless of the timing of related cash flows. Property taxes are recognized as revenues in the year for which they are levied. Grants and similar items are recognized as revenue as soon as all eligibility requirements imposed by the provider have been met.

The governmental fund financial statements are reported using the *current financial resources measurement* focus and the *modified accrual basis of accounting*. Revenues are recognized as soon as they are both measurable and available. Revenues are considered to be available when they are collectible within the current period or soon enough thereafter to pay liabilities of the current period. For this purpose, the government considers revenues to be available if they are collected within 60 days of the end of the current fiscal period. Expenditures generally are recorded when a liability is incurred, as under accrual accounting. However, debt service expenditures, as well as expenditures related to compensated absences, and claims and judgments, are recorded only when payment is due. General capital asset acquisitions are reported as expenditures in governmental funds. Issuance of long-term debt and acquisitions under capital leases are reported as other financing sources.

NOTE 1. Summary of Significant Accounting Policies, Continued

Property taxes, franchise taxes, licenses, and interest associated with the current fiscal period are all considered to be susceptible to accrual and so have been recognized as revenues of the current fiscal period. Entitlements are recorded as revenues when all eligibility requirements are met, including any time requirements, and the amount is received during the period or within the availability period for this revenue source (within 60 days of yearend). Expenditure-driven grants are recognized as revenue when the qualifying expenditures have been incurred and all other eligibility requirements have been met, and the amount is received during the period or within the availability period for this revenue source (within 60 days of yearend). All other revenue items are considered to be measurable and available only when cash is received by the government.

The proprietary funds are reported using the *economic resources measurement* focus and the *accrual basis of accounting*.

Assets, liabilities, deferred outflows/inflows of resources, and net position/fund balance

Cash and cash equivalents

The government's cash and cash equivalents are considered to be cash on hand, demand deposits, and short-term investments with original maturities of three months or less from the date of acquisition.

Investments

Investments for the government are reported at fair value (generally based on quoted market prices). The City of West Wendover invests in the State of Nevada Local Government Investment Pool, which has regulatory oversight from the Board of Finance for the State of Nevada.

State statues authorize the City to invest in obligations of the U.S. Treasury; certain farm loan bonds; certain securities issued by Nevada local governments and other state and local governments; certain repurchase agreements; certain bankers acceptances; certain commercial paper; and certain negotiable certificates of deposits and money market mutual funds, as well as the State of Nevada Local Government Investment Pool.

Inventories and prepaid items

Inventories for the general and proprietary funds are valued at cost using the first-in/first-out (FIFO) method and consist of expendable office supplies, pipe, fittings and miscellaneous automobile parts. The cost of such inventories is recorded as expenditures/expenses when consumed rather than when purchased.

For all other funds, the City of West Wendover charges consumable supplies against appropriations at the time of purchase. Any inventories of such supplies at June 30 are not material to the individual funds and are not recognized in the financial statements.

NOTE 1. Summary of Significant Accounting Policies, Continued

Certain payments to vendors reflect costs applicable to future accounting periods and are recorded as prepaid items in both the government-wide and fund financial statements. The cost of prepaid items is recorded as expenditures/expenses when consumed rather than when purchased

Capital assets

Capital assets, which include property, plant, equipment, and infrastructure assets (e.g. roads, bridges, sidewalks, and similar items), are reported in the applicable governmental or business-type activities column in the government-wide financial statements. Capital assets are defined by the government as assets with an initial, individual cost of more than $5,000 and an estimated useful life in excess of two years.

The City has elected not to record infrastructure assets prior to July 1, 2003 as allowed by Governmental Accounting Statement number 34 for phase 3 governments.

As the government constructs or acquires additional capital assets each period, including infrastructure assets, they are capitalized and reported at historical cost. The reported value excludes normal maintenance and repairs which are essentially amounts spent in relation to capital assets that do not increase the capacity or efficiency of the item or increase its estimated useful life. Donated capital assets are recorded at their estimated acquisition value at the date of donation.

Interest incurred during the construction phase of capital assets of enterprise funds is included as part of the capitalized value of the assets constructed. The amount of interest capitalized depends on the specific circumstances.

Land and construction in progress are not depreciated. The other property, plant, equipment, and infrastructure of the primary government are depreciated using the straight line method over the following estimated useful lives:

Building	35 to 50 years
Improvements other than buildings	20 to 30 years
Machinery, equipment, and vehicles	3 to 10 years
Utility systems	10 to 50 years

Deferred outflows/inflows of resources

In addition to assets, the statement of financial position will sometimes report a separate section for deferred outflows of resources. This separate financial statement element, *deferred outflows of resources*, represents a consumption of net position that applies to a future period(s) and so will not be recognized as an outflow of resources (expense/ expenditure) until then. The City has one type of item that qualifies for reporting for reporting in this category which is pension related items reported on the government-wide financial statements. See footnote 17 for more information.

NOTE 1. Summary of Significant Accounting Policies, Continued

In addition to liabilities, the statement of financial position will sometimes report a separate section for deferred inflows of resources. This separate financial statement element, *deferred inflows of resources*, represents an acquisition of net position that applies to a future period(s) and so will not be recognized as an inflow of resources (revenue) until that time. The City has one type of item that qualifies for reporting in this category which is pension related items reported on the government-wide financial statements. See footnote 17 for more information. The governmental funds report unearned revenues from two sources: advance payments for business licenses and advance payments for gaming licenses. These amounts are deferred and recognized as an inflow of resources in the period that the amounts are earned.

Net position flow assumption

Sometimes the government will fund outlays for a particular purpose from both restricted (e.g., restricted bond or grant proceeds) and unrestricted resources. In order to calculate the amounts to report as restricted – net position and unrestricted – net position in the government-wide and proprietary fund financial statements, a flow assumption must be made about the order in which the resources are considered to be applied. It is the government's policy to consider restricted – net position to have been depleted before unrestricted – net position is applied.

Fund balance flow assumptions

Sometimes the government will fund outlays for a particular purpose from both restricted and unrestricted resources (the total of committed, assigned, and unassigned fund balance). In order to calculate the amounts to report as restricted, committed, assigned, and unassigned fund balance in the governmental fund financial statements a flow assumption must be made about the order in which the resources are considered to be applied. It is the government's policy to consider restricted fund balance to have been depleted before using any of the components of unrestricted fund balance. Further, when the components of unrestricted fund balance can be used for the same purpose, committed fund balance is depleted first, followed by assigned fund balance. Unassigned fund balance is applied last.

Fund balance policies

Fund balance of governmental funds is reported in various categories based on the nature of any limitations requiring the use of resources for specific purposes. The government itself can establish limitations on the use of resources through either a commitment (committed fund balance) or an assignment (assigned fund balance).

The committed fund balance classification includes amounts that can be used only for the specific purposes determined by a formal action of the government's highest level of decision-making authority. The governing council is the highest level of decision-making authority for the government that can, by adoption of an ordinance prior to the end of the fiscal year, commit fund balance. Once adopted, the limitation imposed by the ordinance remains in place until a similar action is taken (the adoption of another ordinance) to remove or revise the limitation.

NOTE 1. Summary of Significant Accounting Policies, Continued

Amounts in the assigned fund balance classification are intended to be used by the government for specific purposes but do not meet the criteria to be classified as committed. The city council (council) has by resolution authorized the Mayor, City Manager, and Chief Financial Officer to assign fund balance. The council may also assign fund balance as it does when appropriating fund balance to cover a gap between estimated revenue and appropriations in the subsequent year's appropriated budget. Unlike commitments, assignments generally only exist temporarily. In other words, an additional action does not normally have to be taken for the removal of an assignment. Conversely, as discussed above, an additional action is essential to either remove or revise a commitment.

Revenues and Expenditures/Expenses

Program revenues

Amounts reported as program revenues include 1) charges to customers or applicants who purchase, use, or directly benefit from goods, services, or privileges provided by a given function or segment and 2) grants and contributions (including special assessments) that are restricted to meeting the operational or capital requirements of a particular function or segment. All taxes, including those dedicated for specific purposes, and other internally dedicated resources are reported as general revenues rather than as program revenues.

Property taxes

All real property within the City of West Wendover is assigned a parcel number by the Elko County Assessor in accordance with state law, with each parcel being subject to physical reappraisal every five years. A factoring system is used to adjust the appraised value during the years between physical appraisals. The property and its improvements are assessed at 35% of "taxable value" as defined by statute. The amount of tax levied is developed by multiplying the assessed value by the tax rate applicable to the area in which the property is located. The maximum tax rate was established in the State Constitution at $5 per $100 of assessed valuation; however, as a result of legislative action, the tax rate was further limited to $3.64 per $100 as assessed valuation, except in cases of severe financial emergency as defined by NRS 354.705. Taxes on real property are a lien on the property and attach on July 1 of the year for which the taxes are levied.

Taxes may be paid in four installments, the first installment is due on the third Monday of August and the remaining three installments are payable on the first Monday in October, January and March to the Treasurer of Elko County in which the City of West Wendover is located. Penalties are assessed if a taxpayer fails to pay an installment within ten days of the installment due date. After a two year waiting period, if the taxes remain unpaid, a tax deed is issued conveying the property to the County with a lien for back taxes and accumulated charges. Redemption may be made by the owner or such persons as described by statute by paying all back taxes and accumulated penalties, interest and costs before sale.

Taxes on personal property are collected currently. Personal property declarations are mailed out annually by the County and the tax is computed using percentages of taxable values established by the Department of Taxation and the tax rates described above.

NOTE 1. Summary of Significant Accounting Policies, Continued

Compensated absences

Vacation and Sick-leave

The city's policy permits employees to accumulate earned but unused vacation benefits, which are eligible for payment upon separation from government service. The liability for such leave is reported as incurred in the government-wide and proprietary fund financial statements. A liability for those amounts is recorded in the governmental funds only if the liability has matured as a result of employee resignations or retirements.

Per City Policy and Collective Bargaining Agreements, employees earn (accrue) sick leave benefits which they are eligible to receive upon separation of service at a determined percentage based upon total years of service and based upon the required notice of separation.

Proprietary funds operating and non-operating revenues and expenses

Proprietary funds distinguish *operating* revenues and expenses from *non-operating* items. Operating revenues and expenses generally result from providing services and producing and delivering goods in connection with a proprietary fund's principal ongoing operations. The principal operating revenues of the water fund, sewer fund, and garbage/compost facility fund are charges to customers for sales and services. Operating expenses for enterprise funds include the cost of sales and services, administrative expenses, and depreciation on capital assets. All revenues and expenses not meeting this definition are reported as non-operating revenues and expenses.

Use of Estimates

The preparation of financial statements in conformity with accounting principles generally accepted in the United States of America requires management to make estimates and assumptions that affect the reported amounts of assets and liabilities and disclosure of contingent assets and liabilities at the date of the financial statements and the reported amounts of revenues and expenditures/expenses during the reporting period. Actual results could differ from those estimates.

Pensions

For purposes of measuring the net pension liability, deferred outflows of resources and deferred inflows of resources related to pensions, and pension expense, information about the pension plan's fiduciary net position of the Public Employees' Retirement System of Nevada (PERS) and additions to/deductions from the plan's fiduciary net position have been determined on the same basis as they are reported by PERS. For this purpose, benefit payments (including refunds of employee contributions) are recognized when due and payable in accordance with the benefit terms. Investments are reported at fair value.

NOTE 1. Summary of Significant Accounting Policies, Continued

Comparative Data

Comparative data shown for the prior year has been extracted from the 2017-2018 financial statements and reclassified where necessary. It has been provided to add comparability but is not considered full disclosure of transactions for 2017-2018. Such information can only be obtained by referring to the audited financial statements for that year.

NOTE 2. Reconciliation of Government-Wide and Fund Financial Statements

The governmental fund balance sheet includes reconciliation between total governmental fund balances and net position of governmental activities as reported in the government-wide statement of net position. This difference primarily results from the long-term economic focus of the statement of net position versus the current financial resources focus of the governmental fund balance sheets. The details of these differences are reported in the reconciliation on as listed in the table of contents.

The governmental fund statement of revenues, expenditures, and changes in fund balance includes a reconciliation between net changes in fund balances-total governmental funds and changes in net position of governmental activities as reported in the government-wide statement of activities. These differences are the result of converting from the current resources measurement focus and modified accrual basis for governmental fund statements to the economic resources measurement focus and full accrual basis used for government-wide statements. The details of these differences are reported in the reconciliation as listed in the table of contents.

NOTE 3. Stewardship, Compliance, and Accountability

Budgets and Budgetary Accounting

The City adheres to the Local Government Budget Act incorporated in Section 354 of the Nevada Revised Statutes. The provision of the Act included the following major procedures to establish the budgetary data which is reflected in these financial statements.

a. On or before April 15, the City Council files a tentative budget with the Nevada Department of Taxation for all funds.

b. Public budget hearings on the tentative budget are held on the third Tuesday of May.

c. On or before June 1, at a public hearing, the City Council indicates changes, if any, to be made to the tentative budget must then be forwarded to the Nevada Department of Taxation for the final review and approval.

d. Formal budgetary integration in the financial records of all funds is employed to enhance management control during the year.

e. Budgets for all funds are adopted on a basis consistent with generally accepted accounting principles (GAAP). All appropriations lapse at year end.

f. Budget amounts within funds, and between funds, may be transferred if amounts do not exceed the original budget. Such transfers must be approved by the budget officer and/or City Council, depending on established criteria. Budget augmentations in excess of original budgetary amounts may only be made with prior approval of the City Council, following a scheduled and noticed public hearing for those funds which have ad valorem taxes allocated as a source of revenue. For all other funds, the City Council must approve the budget augmentation with a majority vote and adopt a resolution providing therefore.

g. The above dates may be adjusted as necessary during legislative years.

h. The budget amounts reflected in the financial statements have been amended from the original amounts in accordance with the approved procedures.

i. In accordance with state statute, actual expenditures may not exceed budgeted appropriations of the various governmental functions (excluding the debt services functions) in the General Fund and total expenditures in other governmental funds. Per NRS 354.626, expenditures over budgeted appropriations are allowed for bond repayments, medium term obligation repayments and long-term contracts expressly authorized by law.

Expenditures over Appropriations – Deficit Fund Balances

No funds incurred deficit fund balances for fiscal year 2019. The individual Schedule of Revenues, Expenditures and Changes in Net Position – Budget and Actual report on page 68 shows that the Court Administration Assessments Fund incurred an excess of expenditures over appropriations for the year ended June 30, 2019 by ($687).

NOTE 4. Cash and Investments

A reconciliation of cash deposits and investments to the government-wide statement of net position as follows:

	Primary Government	Component Unit
Deposits:		
Cash on hand	$ 1,575	$ -
Cash in bank	3,956,409	(1,194,530)
Investments:		
Nevada local government investment pool	1,483,414	1,361,602
Total deposits and investments	$ 5,441,398	$ 167,071
Cash and cash equivalents	$ 4,179,875	$ 167,071
Restricted cash	1,261,522	-
	$ 5,441,398	$ 167,071

Deposits

Custodial Credit Risk

For deposits this is the risk that in the event of a bank failure, the government's deposit may not be returned. The City does not have a formal policy for custodial credit risk. As of June 30, 2018, $0 of the primary government and component unit's combined bank balance of $2,800,497 was exposed to custodial credit risk because it was either fully insured by FDIC insurance or collateralized by a pledging financial institution.

Investments

The Nevada State Treasurer's Office operates the Local Government Investment Pool (LGIP). The LGIP is an external investment pool operated by the Nevada Public Treasurer.

The LGIP is not registered with the SEC as an investment company. Deposits in the LGIP are not insured or otherwise guaranteed by the State of Nevada, and participants share proportionally in any realized gain or losses on investments.

The provisions of State Law (NRS 355.170) govern the investment of public funds as noted in Footnote 1.

NOTE 4. Cash and Investments, Continued

As of June 30, 2019 the government had the following investments:

Investment Type	Primary Government Fair Value	Component Unit Fair Value	Rating (1)	Weighted Average Maturity (2)
Nevada Local Government Pooled Investment Fund	$ 1,483,414	$ 1,361,602	N/A	116
Total Fair Value	$ 1,483,414	$ 1,361,602		

(1) Ratings are provided where applicable to indicate associated Credit Risk. N/A indicates not applicable.

(2) Interest Rate Risk is estimated using the weighted average days to maturity.

The City categorizes its fair value measurements within the fair value hierarchy established by generally accepted accounting principles. The hierarchy is based on the valuation inputs used to measure the fair value of the asset. Level 1 inputs are quoted prices in active markets for identical assets; Level 2 inputs are significant other observable inputs; Level 3 inputs are significant unobservable inputs.

The City has the following recurring fair value measurements as of June 30, 2019:

- Nevada Local Government's Investment Pool (LGIP):

	Primary Government	Component Unit
Level 1 inputs	$ 273,393	$ 250,943
Level 2 inputs	1,210,021	1,110,658
Total LGIP investment	$ 1,483,414	$ 1,361,602

Interest Rate Risk

Interest rate risk is the risk that changes in interest rates will adversely affect the fair value of an investment. The City's policy for managing its exposure to fair value loss arising from increasing interest rates is to comply with the provisions of State law (NRS 355.170).

Credit Risk

Credit risk is the risk that an issuer or other counterparty to an investment will not fulfill its obligations. The primary government and component unit's policy for reducing its exposure to credit risk is to limit its investments to the Nevada Local Government Investment Pool and to comply with State Law (NRS 355.170). The Nevada Local Government Investment Pool is unrated.

Concentration of Credit Risk

The Primary Government and the Component Unit place no limit on the amount the Primary Government or the Component Unit may invest in any one issue.

NOTE 4. Cash and Investments, Continued

Cash Restricted for Special Uses

The primary government and the component unit maintain restricted cash to comply with various legal and contractual requirements. Amounts restricted are as follows at June 30, 2019:

Restricted cash footnote

Medium Term Sales Tax Revenue Bond Reserves	$	308,275
Sewer/Compost Revenue Bond Series 1999B Bond Reserves		115,320
Sewer/Compost Revenue Bond Series 1999A Bond Reserves		41,515
Closure / post closure trust funds		67,952
Waste Water Treatment Plant Revenue Bond Reserves		88,095
1998 Water Revenue Bond Reserves		173,712
Water Revenue Bonds, Series 2015 Bond Reserves		12,096
Water Rev Bonds Series 2015 - Asset Replacement		114,536
AB198 Capital Replacement Projects Fund		339,581
Unutilized Regional Transportation Commission Funds		440
Total restricted cash - primary government	$	1,261,522

NOTE 5. Receivables / Due from other Governments

Receivables in the governmental funds consist principally of room and franchise taxes due various businesses. Amounts due from other governments consist primarily of taxes due from the State of Nevada and grant revenues due from various granting agencies. All receivables and amounts due from other governments are considered by management to be fully collectible and therefore, no allowance for doubtful accounts is necessary.

Receivables in the proprietary funds represent service billings to customers and are shown net of an allowance for doubtful accounts. The allowance for doubtful accounts is estimated based on professional judgement and historical information. The allowances for doubtful accounts at June 30, 2019 were as follows:

Water Fund	$	-
Sewer Fund		-
Garbage/Compost Fund		71
Johnson Springs		-
	$	71

NOTE 6. Capital Assets

Governmental capital asset activity for the year ended June 30, 2019 was as follows:

Governmental Activities:	Balance 6/30/18	Additions	Deletions	Balance 6/30/19
Capital assets, not being depreciated:				
Land	$ 1,637,283	$ -	$ (169,852)	$ 1,467,431
Construction in progress	-	64,815	-	64,815
Total capital assets, not being depreciated	1,637,283	64,815	(169,852)	1,532,246
Capital assets, being depreciated:				
Buildings	11,271,605	-	-	11,271,605
Other improvements	14,321,856	-	-	14,321,856
Machinery and equipment	3,623,327	100,992	-	3,724,319
Total capital assets, being depreciated	29,216,788	100,992	-	29,317,780
Less accumulated depreciation for:				
Buildings	(3,045,460)	(277,715)	-	(3,323,175)
Other improvements	(3,365,605)	(526,915)	-	(3,892,520)
Machinery and equipment	(3,147,879)	(215,056)	-	(3,362,935)
Total accumulated depreciation	(9,558,944)	(1,019,686)	-	(10,578,630)
Total capital assets, being depreciated, net	19,657,844	(918,694)	-	18,739,150
Governmental activities capital assets, net	$ 21,295,127	$ (853,879)	$ (169,852)	$ 20,271,396

Depreciation expense was charged to the functions/programs of the City as follows:

Governmental Activities:	
General government	$ 561,622
Judicial	6,787
Public safety	174,202
Public works	283
Health and sanitation	22,803
Culture and recreation	94,862
Community support	1,194
Streets and highways	157,933
Total depreciation expense - governmental activities	$ 1,019,686

NOTE 6. Capital Assets, Continued

Business-type capital asset activity for the year ended June 30, 2019 was as follows:

Business-Type Activities:	Balance 6/30/18	Additions	Deletions	Balance 6/30/19
Capital assets not being depreciated:				
Land	$ 111,000	$ -	$ -	$ 111,000
Total capital assets, not being depreciated	111,000	-	-	111,000
Capital assets being depreciated:				
Buildings	3,979,994	-	-	3,979,994
Other improvements	6,191,350	16,104	-	6,207,454
Machinery and equipment	4,439,015	14,161	-	4,453,176
Utility systems	18,035,585	-	-	18,035,585
Total capital assets, being depreciated	32,645,944	30,265	-	32,676,209
Less accumulated depreciation for:				
Buildings	(440,147)	(99,499)	-	(539,646)
Other improvements	(3,412,742)	(222,198)	-	(3,634,940)
Machinery and equipment	(3,591,964)	(167,836)	-	(3,759,800)
Utility systems	(6,023,631)	(538,799)	-	(6,562,430)
Total accumulated depreciation	(13,468,484)	(1,028,332)	-	(14,496,816)
Total capital assets, being depreciated, net	19,177,460	(998,067)	-	18,179,393
Business-type activities capital asset, net	$ 19,288,460	$ (998,067)	$ -	$ 18,290,393

Depreciation expense was charged to the functions/programs of the City as follows:

Business-Type Activities:	
Water Fund	$ 138,002
Sewer Fund	554,964
Combined Garbage / Compost Facility Fund	335,366
Total depreciation expense - business-type activities	$ 1,028,332

NOTE 6. Capital Assets, Continued

Component unit capital asset activity for the year ended June 30, 2019 was as follows:

Component Unit - Johnson Springs	Balance 06/30/18	Additions	Deletions	Balance 06/30/19
Capital assets not being depreciated:				
Land	$ 18,000	$ -	$ -	$ 18,000
Total capital assets, not being depreciated	18,000	-	-	18,000
Capital assets being depreciated:				
Buildings	6,836,936	-	-	6,836,936
Other improvements	411,632	-	-	411,632
Machinery and equipment	506,351	64,903	-	571,254
Utility system	5,305,132	-	-	5,305,132
Total capital assets, being depreciated	13,060,051	64,903	-	13,124,954
Less accumulated depreciation for:				
Buildings	(4,174,211)	(217,712)	-	(4,391,923)
Other improvements	(139,608)	(19,727)	-	(159,335)
Machinery and equipment	(375,819)	(13,232)	-	(389,051)
Water utility system	(1,756,816)	(132,844)	-	(1,889,660)
Total accumulated depreciation	(6,446,454)	(383,515)	-	(6,829,969)
Total capital assets, being depreciated, net	6,613,597	(318,612)	-	6,294,985
Johnson Springs component unit fund activities capital assets, net	$ 6,631,597	$ (318,612)	$ -	$ 6,312,985

NOTE 7. Long-Term Liabilities

The following is a summary of long-term liabilities for the year ended June 30, 2019:

Long-Term Debt	Date of Issue	Interest Rate	Orriginal Amount of Issue	June 30, 2018	Additions	Retirements	June 30, 2019	Current Portion
Governmental Activities								
Public Offering Bonds Payable:								
General Obligation Medium-Term Bonds, Series 2009	2/27/2009	4.46%	2,200,000	$ 270,000	$ -	$ (270,000)	$ -	$ -
Total public offering bonds payable				270,000	-	(270,000)	-	-
Direct Placement Bonds Payable:								
Medium Term Sales Tax Revenue Bond, Seriers 2009 (City Hall)	8/18/2009	4.38%	5,225,000	4,311,429	-	(126,646)	4,184,783	132,507
General Obligation Medium-Term Bonds, Series 2015	7/14/2015	2.26%	2,200,000	1,784,000	-	(217,000)	1,567,000	225,000
Total direct placement bonds payable				6,095,429	-	(343,646)	5,751,783	357,507
Total Bonds Payable				6,365,429	-	(613,646)	5,751,783	357,507
Other Liabilities								
Compensated absences				287,954	218,250	(183,699)	322,505	144,000
Net pension liability				6,768,416	605,632	(433,888)	6,940,160	-
Total governmental long-term liabilities				$ 13,421,799	$ 823,882	$ (1,231,233)	$ 13,014,448	$ 501,507

For governmental activities, compensated absences and net position liabilities are generally liquidated through the General Fund.

NOTE 7. Long-Term Liabilities, continued

Long-Term Debt	Date of Issue	Interest Rate	Orriginal Amount of Issue	June 30, 2018	Additions	Retirements	June 30, 2019	Current Portion
Business-Type Activities								
Public Offerings Bonds:								
General Obligation Medium-Term Bonds, Series 2008	9/4/2008	4.95%	800,000	$ 168,000	$ -	$ (168,000)	$ -	$ -
1998 Sewer/Compost Revenue Bonds	11/17/1998	4.75%	1,280,000	89,717	-	(89,717)	-	-
Sewer/Compost Revenue Bonds Series 1999B	8/18/1999	4.50%	1,500,000	209,126	-	(106,362)	102,764	102,764
Sewer/Compost Revenue Bonds Series 1999A	8/18/1999	4.50%	540,000	75,285	-	(38,290)	36,995	36,995
Waste Water Treatment Plant Revenue Bond	6/1/2012	2.75%	2,637,000	2,377,586	-	(43,330)	2,334,256	45,077
Total business-type public offering bonds payable				2,919,714	-	(445,699)	2,474,015	184,836
Direct Placement Bonds Payable:								
1998 Water Revenue Bonds	11/17/1998	4.75%	3,058,300	2,265,253	-	(66,439)	2,198,814	68,689
General Obligation Limited Tax Medium-Term, Series 2014	6/17/2017	2.43%	2,100,000	1,366,000	-	(203,000)	1,163,000	213,000
Water Revenue Bonds, Series 2015	10/8/2015	2.63%	747,000	719,652	-	(11,460)	708,192	11,716
Total business-type direct placement bonds payable				4,350,905	-	(280,899)	4,070,006	293,405
Total business-type long-term debt				7,270,619	-	(726,598)	6,544,021	478,241
Capital leases payable:								
Garbage Truck - Compost/Garbage Lease	9/26/2012	3.32%	232,157	41,919	-	(41,919)	-	-
2018 Caterpillar Wheel Loader Compost Lease	1/18/2018	4.20%	231,738	197,641	-	(28,835)	168,806	29,658
Total Capital Lease Payable				239,560	-	(70,754)	168,806	29,658
Other Liabilities								
Net pension liability				1,331,072	172,295	(90,374)	1,412,993	-
Compensated absences				31,186	14,017	(19,890)	25,313	25,313
Total business-type long-term liabilities				$ 8,872,437	$ 186,312	$ (907,616)	$ 8,151,133	$ 533,212
Component Unit								
Johnson Springs								
Other Liabilities								
Net pension liability				186,819	-	(18,870)	167,949	-
Compensated absences				9,461	7,728	(6,034)	11,155	11,155
Total Component Unit long-term liabilities				$ 196,280	$ 7,728	$ (24,904)	$ 179,104	$ 11,155

NOTE 7. Long-Term Liabilities, Continued

Revenue Bonds

The City has pledged future net revenues from the City's Municipal Water System to repay $3,058,300 and $747,000 in water revenue bonds issued in November 1998 and 2016, respectively, with interest rates of 4.75% and 2.63%, respectively. Proceeds from the bonds provided financing to pay for the cost to acquire, improve, construct, equip, operate, and maintain a water project for the City. The bonds are payable solely from net revenues from the Municipal Water System and are payable through 2038 and 2055.

The City has pledged future net revenues from the City's Compost Facility to repay $1,280,000 and $2,040,000 in sewer/compost revenue bonds issued in November 1998 and August 1999 with interest rates of 4.75% and 4.5%, respectively. Proceeds from the bonds provided financing for the development and construction of a compost facility. The bonds are payable solely from future net revenues from the Compost Facility and are payable through 2019.

The City has pledged future net revenues from the City's Sewer Facility to repay $2,637,000 in sewer revenue bonds issued in June 2012 with an interest rate of 2.75%. Proceeds from the bonds provided financing for the construction of a new sewer facility. The bonds are payable solely from future net revenues from the Sewer Facility and are payable through 2052.

The following schedules reflect debt service requirements to maturity of the City's debt as of June 30, 2019:

	Governmental Activities		Business-Type Activities			
Year Ending	Direct Placement Bonds		Public Offering Bonds		Direct Placement Bonds	
June 30,	Principle	Interest	Principle	Interest	Principle	Interest
2020	$ 357,507	$ 213,865	$ 184,836	$ 75,282	$ 293,405	$ 151,806
2021	371,918	202,278	46,497	62,467	306,028	143,009
2022	386,119	190,721	47,789	61,175	319,767	133,875
2023	401,597	178,695	49,117	59,847	334,675	124,329
2024	356,938	167,280	50,323	58,641	348,716	114,383
2025-2029	1,322,921	673,128	274,074	270,746	546,935	472,820
2030-2033	1,124,502	442,907	314,341	230,480	681,200	338,558
2034-2039	1,378,169	163,206	360,523	184,297	835,962	170,425
2040-2044	52,112	138	413,435	131,385	104,589	46,611
2045-2049	-	-	474,272	71,771	119,244	31,956
2050-2054	-	-	258,808	9,746	135,919	15,281
2055-2059	-	-	-	-	43,566	991
Total Principal	$ 5,751,783	$ 2,232,218	$ 2,474,015	$ 1,215,837	$ 4,070,006	$ 1,744,044

NOTE 7. Long-Term Liabilities, Continued

The City's outstanding bonds from direct placements of $9,821,791 are secured with pledged revenues. The outstanding issues from direct placement contain provisions that in an event of default, the bonds become taxable and the interest rate on the bonds increases.

The City has no unused lines of credit at June 30, 2019.

NOTE 8. Capital Leases Payable

The government has entered into two lease agreements, which are considered capital leases in accordance with Financial Accounting Standard Board ASC 840-30-25. The two leases are shown in the combined garbage/compost fund. The total amount of equipment capitalized under the leases is $463,545 for the business-type activities. Amortization on capital leases is included in depreciation expense.

The following is an annual schedule of future minimum lease payments with interest rates ranging from 1.88% to 4.2% under the capital leases, together with the present value of the net minimum lease payments:

Year Ending June 30	Governmental Activities	Business-type Activities
2020	$ -	$ 43,654
2021	-	42,408
2022	-	41,111
2023	-	61,940
2024	-	-
Total remaining minimum lease payments	-	189,113
Less amount representing interest	-	(20,307)
Present value of net remaining minimum lease payments	$ -	$ 168,806

NOTE 9. Segment Information

In previous years, the component unit, Johnson Springs, issued separate revenue bonds to finance its operations. Segment information for Johnson Springs is disclosed below and also in the supplementary information. Segment information for the other proprietary funds is disclosed in the basic financial statements.

	06/30/19
Operating revenues	$ 687,579
Depreciation and amortization	(383,516)
Operating expenses	(428,279)
Operating income/(loss)	(124,216)
Nonoperating revenues and (expenses)	(74,481)
Change in net position	(198,697)
Beginning net position	4,264,809
Ending net position	4,066,112
Capital asset additions, including capitalized interest	-
Net working capital	(2,094,409)
Total assets	6,552,759
Total deferred outflows	30,417
Current liabilities	66,023
Due to primary government	2,268,160
Bonds and other long term debt obligations	167,949
Total deferred inflows	14,932
Net Position	
Net investment in capital assets	4,044,825
Unrestricted	21,287
Total Net Position	$ 4,066,112
Condensed Statement of Cash Flows	
Net cash flows from:	
Operating activities	$ 260,916
Noncapital financing activities	(68,068)
Capital and related financing activities	(172,488)
Investing activities	31,687
Net Increase (decrease)	$ 52,047
Beginning cash and cash equivalents	115,024
Ending cash and cash equivalents	$ 167,071

NOTE 10. Interfund Receivables, Payables, and Transfers

As of June 30, 2019 interfund receivables and payables that resulted from various interfund transactions for the primary government were as follows:

	Due from Other Funds	Due to Other Funds
General Fund	$ 160,000	$ -
Health Insurance Internal Service Fund	-	160,000
Total	$ 160,000	$ 160,000

As of June 30, 2019, interfund receivables and payables that resulted from transactions between the primary government and the component unit were as follows:

	Due from Component Unit	Due to Primary Government
Water Fund:		
Interest receivable	$ 69,343	$ -
Debt repayment receivable	2,198,817	-
Component Unit		
Interest payable	-	69,343
Debt repayment payable	-	2,198,817
Total	$ 2,268,160	$ 2,268,160

In 1998, the City of West Wendover issued long term debt obligations to complete a water project in behalf of its constituents. The component unit, which benefited from the project, is assisting with the repayment of the revenues bonds issued in the water fund. Hence, there is an interfund balance between the water fund and the component unit, Johnson Springs as shown above.

Interfund transfers for the fiscal year ended June 30, 2019 are as follows:

	Transfers out:		
Transfer in:	General	Non-major Ad Valorem Capital Projects	Total Transfers in
Nonmajor Governmental Funds			
Welcome Center Fund	$ 177,000	$ -	$ 177,000
Wendover Will Landmark Fund	24,500	-	24,500
Capital Projects Fund	200,000	50,000	250,000
Total transfers out	$ 401,500	$ 50,000	$ 451,500

NOTE 10. Interfund Receivables, Payables, and Transfers, Continued

Transfers are used to (1) move revenues from the fund that statute or budget requires to collect them to the fund that statute or budget requires to expend them and (2) use unrestricted revenues collected in the general fund to finance various programs accounted for in other funds in accordance with budgetary authorizations.

NOTE 11. Deferred Compensation Plan

The City offers its employees a deferred compensation plan created in accordance with Internal Revenue Code Section 457. The plan, available to all full-time employees at their option, permits participants until termination, retirement, death, or unforeseeable emergency.

Plan assets are held and administered by The Hartford. The plan does not meet the definition of a fiduciary fund as defined in GASB 32, and therefore, is not reported in this financial statement.

NOTE 12. Room Taxes

On October 16, 2001, Ordinance 01-20 was passed, increasing room taxes from 10% to 16%. Of this rate, 14% is allocated to the West Wendover Recreation District. Additionally, the Ordinance allows for 1% to be paid to a non-profit entity to promote tourism and recreation throughout the City of West Wendover. At June 30, 2019 this amount was held as restricted in the Recreation Fund.

NOTE 13. Commitments and Contingent Liabilities

Amounts received or receivable from grantor agencies are subject to audit and adjustment by grantor agencies, principally the federal government. Any disallowed claims, including amounts already collected may constitute a liability of the applicable funds. The amount, if any, of expenditures which may be disallowed by the grantor cannot be determined at this time although the City expects such amounts, if any, to be immaterial.

The City is party to legal proceedings which normally occur in governmental operations. City officials believe these legal proceedings are not likely to have a material adverse impact on the financial position of the City.

NOTE 14. Available Borrowing Capacity

The lawful general obligation debt limit for city governments is established by State statute not to exceed thirty percent of the total last assessed valuation of the taxable property of the City. At June 30, 2019, the general obligation debt limit and available borrowing capacity of the City of West Wendover was $42,243,869.

NOTE 15. Closure and Post-Closure Care Cost

State and Federal laws and regulations require that the City place a final cover on its landfill sites and perform certain maintenance and monitoring functions at the landfill sites for a minimum of thirty years after closure. In addition to operating expenses related to current activities of the landfill sites, an expense provision and related liability should be recognized based on the future closure and post-closure care costs that will be incurred near or after the date the landfills no longer accepts waste. GASB Statement 18 requires the recognition of these landfill closure and post-closure care costs based on the amount of the landfill used during the year. The City does not report a liability for the estimated closure and post-closure care costs because it has passed a resolution that authorizes participation in the landfill assurance program established through the Nevada Public Agency Insurance Pool as a mechanism to demonstrate financial responsibility for the closure and post-closure care costs. Because the City has, in effect, transferred its responsibility for closure and post-closure care costs to another entity through the purchase of the insurance policy, the liabilities are not reported on the City's financial statements as per GASB 18.

The estimated liability for landfill closure and post-closure care costs under GASB Statement 18 requirements is $591,519 as of June 30, 2019. The City had two cells in operation during fiscal year 2019. The Class I cell has used 100% of available capacity and a new Class I cell was constructed in fiscal year 2016 according to the 2014 Volumetric Survey. The City constructed new cells for operation since 2016, which includes Class III cell, Cell C, Cell B (once fully excavated), and Cell E to be sufficient for an additional 149 months of operation. The estimated closure and post-closure costs are based on the amount that would be paid if all equipment, facilities, and services required to close, monitor, and maintain landfill modules currently in use for all cells in operation during 2019. The City maintained an insurance policy with a face amount of $520,579 at June 30, 2019. The financial assurance shortfall between the insurance policy face amount and the estimated closure and post-closure care costs will need to be covered by the City using one of the allowable mechanisms found at NAC 444.68525. For fiscal year 2019, the shortfall is deemed to be covered by cash and investments on hand in the garbage/compost fund at year end. The City has set aside $67,953 in restricted cash to potentially fund a trust account as listed in note 4. The City plans to work with the Nevada Department of Environmental Protection to officially select and implement an allowable mechanism found at NAC 444.68525 during fiscal year 2020 to address the shortfall in coverage.

NOTE 16. Risk Management

The City is exposed to various risks of loss related to torts; theft of, damage to, and destruction of assets, errors and omissions; injuries to employees; and natural disasters. These risks are covered by commercial insurance purchased from independent third parties. Settled claims from these risks have not exceeded commercial insurance coverage for the past three years.

The City has chosen to establish a risk financing fund for risks associated with the employee's health insurance plan. The risk financing fund is accounted for as an internal service fund where assets are set aside for claim settlement. A premium is charged to each function which accounts for full-time employees.

Liabilities of funds are reported when it is probable that a loss has occurred and the amount of the loss can be reasonably estimated. There were no liabilities that met these criteria at June 30, 2019. Liabilities include an amount for claims that have been incurred but not reported (IBNR). Claim liabilities are calculated considering the effects of inflation, recent claim settlement trends including frequency and amount of pay-outs and other economic and social factors.

Changes in the balances of claims liabilities during the past three fiscal years are as follows:

Fiscal Year Ended June 30	Unpaid Claims Beginning of Fiscal Year	Incurred Claims	Claim Payments	Unpaid Claims End of Fiscal Year
2019	$ -	$ 626,197	$ 626,197	$ -
2018	$ -	$ 651,673	$ 651,673	$ -
2017	$ -	$ 530,207	$ 530,207	$ -

NOTE 17. Retirement and Pension Plans

Public Employees' Retirement System of Nevada (PERS)

Plan description

PERS administers a cost-sharing, multiple-employer, defined benefit public employees' retirement system which includes both Regular and Police/Fire members. The System was established by the Nevada Legislature in 1947, effective July 1, 1948. The System is administered to provide a reasonable base income to qualified employees who have been employed by a public employer and whose earnings capacities have been removed or substantially impaired by age or disability. The report is available on the website at https://www.nvpers.org/.

NOTE 17. Retirement and Pension Plans, Continued

Benefits provided

Benefits, as required by the Nevada Revised Statutes (NRS or statute), are determined by the number of years of accredited service at time of retirement and the member's highest average compensation in any 36 consecutive months with special provisions for members entering the System on or after January 1, 2010. Benefit payments to which participants or their beneficiaries may be entitled under the plan include pension benefits, disability benefits, and survivor benefits.

Monthly benefit allowances for members are computed as 2.5% of average compensation for each accredited year of service prior to July 1, 2001. For service earned on and after July 1, 2001, this multiplier is 2.67% of average compensation. For members entering the System on or after January 1, 2010, there is a 2.5% service time factor and for regular members entering the System on or after July 1, 2015, there is a 2.25% factor. The System offers several alternatives to the unmodified service retirement allowance which, in general, allow the retired employee to accept a reduced service retirement allowance payable monthly during his or her lifetime and various optional monthly payments to a named beneficiary after his or her death.

Post-retirement increases are provided by authority of NRS 286.575 - .579.

Vesting

Regular members entering the System prior to January 1, 2010, are eligible for retirement at age 65 with five years of service, at age 60 with 10 years of service, or at any age with thirty years of service. Regular members entering the System on or after January 1, 2010, are eligible for retirement at age 65 with five years of service, or age 62 with 10 years of service, or any age with thirty years of service. Regular members who entered the System on or after July 1, 2015, are eligible for retirement at age 65 with 5 years of service, or at age 62 with 10 years of service or at age 55 with 30 years of service or any age with 33 1/3 years of service.

Police/Fire members entering the System prior to January 1, 2010, are eligible for retirement at age 65 with five years of service, at age 55 with ten years of service, at age 50 with twenty years of service, or at any age with twenty-five years of service. Police/Fire members entering the System on or after January 1, 2010, are eligible for retirement at 65 with five years of service, or age 60 with ten years of service, or age 50 with twenty years of service, or at any age with thirty years of service. Only service performed in a position as a police officer or firefighter may be counted towards eligibility for retirement as Police/Fire accredited service.

The normal ceiling limitation on monthly benefits allowances is 75% of average compensation. However, a member who has an effective date of membership before July 1, 1985, is entitled to a benefit of up to 90% of average compensation. Both Regular and Police/Fire members become fully vested as to benefits upon completion of five years of service.

NOTE 17. Retirement and Pension Plans, Continued

Contributions

The authority for establishing and amending the obligation to make contributions and member contribution rates is set by stature. New hires, in agencies which did not elect the Employer-Pay Contribution (EPC) plan prior to July 1, 1983, have the option of selecting one of two contribution plans. Contributions are shared equally by employer and employee. Employees can take a reduced salary and have contributions made by the employer (EPC) or can make contributions by a payroll deduction matched by the employer.

The System's basic funding policy provides for periodic contributions at a level pattern of cost as a percentage of salary throughout an employee's working lifetime in order to accumulate sufficient assets to pay benefits when due.

The System receives an actuarial valuation on an annual basis indicating the contribution rates required to fund the System on an actuarial reserve basis. Contributions actually made are in accordance with the required rates established by the Nevada Legislature. These statutory rates are increased/decreased pursuant to NRS 286.421 and 286.450.

The actuary funding method used is the Entry Age Normal Cost Method. It is intended to meet the funding objective and result in a relatively level long-term contributions requirement as a percentage of salary.

For fiscal years ended June 30, 2018, and 2019, the Statutory Employer/employee matching rate was 14.50% for Regular and 20.75% for Police/Fire.

For the fiscal year ended June 30, 2018, and 2019, the Employer-Pay Contribution (EPC) rate was 28% for Regular and 40.50% for Police/Fire.

The City's contributions for the current and two preceding fiscal years, all of which were equal to the required contributions, were as follows:

Year Ended June 30,	Regular Fund	Police/Fire Fund
2017	$ 228,592	$ 330,642
2018	236,938	342,714
2019	222,775	322,229

NOTE 17. Retirement and Pension Plans, Continued

Investment policy

The System's policies which determine the investment portfolio target asset allocation are established by the Board. The asset allocation is reviewed annually and is designed to meet the future risk and return needs of the System. The following was the Board adopted policy target asset allocation as of June 30, 2018:

Asset Class	Target Allocation	Long-term Geometric Expected Real Rate of Return*
Domestic equity	42%	5.50%
International equity	18%	5.75%
Domestic fixed income	30%	0.25%
Private markets	10%	6.80%

*As of June 30, 2018, PERS' long-term inflation assumption was 2.75%.

Pension liability

Net pension liability

At June 30, 2019, the City reported a liability of $8,521,101 for its proportionate share of the PERS' net pension liability. The net pension liability was measured as of June 30, 2018, and the total pension liability used to calculate the net pension liability was determined by an actuarial valuation as of that date. The employer allocation percentage of the net pension liability was based on the total contributions due on wages paid during the measurement period. Each employer's proportion of the net pension liability is based on their combined employer and member contributions relative to the total combined employer and member contributions for all employers for the period ended June 30, 2018. The City's proportion measured as of June 30, 2018, was 0.06248 percent, which was an decrease of 0.00018 percent from its proportion measured as of June 30, 2017.

Pension liability discount rate sensitivity

The following presents the net pension liability of the PERS as of June 30, 2019, calculated using the discount rate of 7.50%, as well as what the PERS net pension liability would be if it were calculated using a discount rate that is 1-percentage-point lower (6.50%) or 1-percentage-point higher (8.50%) than the current discount rate:

	1% Decrease (6.50%)	Discount Rate (7.50%)	1% Increase (8.50%)
Proportionate share of Net pension (asset) / liability	$ 12,994,334	$ 8,521,102	$ 4,804,105

NOTE 17. Retirement and Pension Plans, Continued

Pension plan fiduciary net position

Detailed information about the pension plan's fiduciary net position is available in the PERS Comprehensive Annual Financial Report, available on the PERS website www.nvpers.org.

Actuarial assumptions

The City's net pension liability was measured as of June 30, 2018, and the total pension liability used to calculate the net pension liability was determined by an actuarial valuation as of that date. The total pension liability was determined using the following actuarial assumptions, applied to all periods included in the measurement:

Inflation rate	2.75%
Payroll growth	5.00%, including inflation
Investment rate of return	7.50%
Productivity pay increase	0.50%
Projected salary increases	Regular: 4.25% to 9.15%, depending on service Police/Fire: 4.55% to 13.90%, depending on service Rates include inflation and productivity increases
Consumer Price Index	2.75%
Other assumptions	Same as those used in the June 30, 2018 funding actuarial valuation

Actuarial assumptions used in the June 30, 2018 valuation were based on the results of the experience review completed in 2017.

The discount rate used to measure the total pension liability was 7.50% as of June 30, 2018 and 7.5% as of June 30, 2017. The projection of cash flows used to determine the discount rate assumed that employee and employer contributions will be made at the rate specified in statute. Based on that assumption, the pension plan's fiduciary net position at June 30, 2018, was projected to be available to make all projected future benefit payments of current active and inactive employees. Therefore, the long-term expected rate of return on pension plan investments was applied to all periods of projected benefit payments to determine the total pension liability as of June 30, 2018.

Pension expense and deferred outflows/inflows of resources related to pensions

For the year ended June 30, 2019, the City recognized pension expense for PERS of $543,124. At June 30, 2019, the City reported deferred outflows of resources and deferred inflows of resources related to pensions from the following sources:

NOTE 17. Retirement and Pension Plans, Continued

	Deferred Outflows of Resources	Deferred Inflows of Resources
Differences between expected and actual experience	$ 266,942	$ 395,525
Changes in assumptions	449,008	-
Net difference between projected and actual earnings on pension plan investments	-	40,568
Subtotal	715,950	436,093
Changes in proportion and differences between contributions and proportional share of contributions	282,308	321,494
Contributions subsequent to the measurement date	545,001	-
Total	$ 1,543,259	$ 757,587
Governmental activities	$ 1,256,937	$ 617,032
Business-type activities	286,322	140,555
	$ 1,543,259	$ 757,587

Average expected remaining service lives 6.22 years

The $545,001 reported as deferred outflows of resources related to PERS pensions resulting from City contributions subsequent to the measurement date will be recognized as a reduction of the net pension liability in the subsequent fiscal year. Other amounts reported as deferred outflows of resources and deferred inflows of resources related to PERS pensions, excluding the changes in proportion and differences between actual contributions and proportionate share of contributions will be recognized in pension expense as follows:

Year Ending June 30,	Deferred Outflows (Inflows) of Resources
2020	$ 195,040
2021	51,946
2022	(133,713)
2023	72,365
2024	82,969
2025	11,250
Thereafter	-

NOTE 18. Subsequent Events

The City refunded the 1998 USDA Water Bond in August 2019, with a General Obligation Water Refunding Bond Series 2019 for $2,173,729.

REQUIRED SUPPLEMENTARY INFORMATION

BUDGETARY COMPARISON SCHEDULES FOR THE FOLLOWING MAJOR FUNDS:

The **General Fund** is the City's primary operating fund. It accounts for all financial resources of the general government, except for those required to be accounted for in another fund.

The **Recreation Fund** is used to account for the City's share of room tax proceeds and the distribution of those funds to the recreation district.

PUBLIC EMPLOYEES' RETIREMENT SYSTEM OF NEVADA SCHEDULES

CITY OF WEST WENDOVER, NEVADA
General Fund
Schedule of Revenues, Expenditures, and Changes in Fund Balance
Budget and Actual
For the Year Ended June 30, 2019
(With Comparative Actual Amounts for the Year Ended June 30, 2018)

	Original Budget	Final Budget	Actual	Variance with Final Budget	2018
Revenues					
Property taxes					
Ad valorem	$ 1,308,500	$ 1,308,500	$ 1,288,164	$ (20,336)	$ 1,249,718
Personal property	182,600	182,600	222,668	40,068	229,294
Central assessments	24,700	24,700	23,536	(1,164)	24,668
Total property taxes	1,515,800	1,515,800	1,534,368	18,568	1,503,680
Licenses and permits					
Liquor licenses	1,200	-	-	-	480
City gaming licenses	220,700	230,000	216,084	(13,916)	221,136
Animal licenses	1,000	1,500	1,574	74	1,175
Business licenses	22,000	16,000	17,005	1,005	16,885
Right of way toll	292,400	292,400	316,050	23,650	290,142
Building permits	50,000	85,000	72,297	(12,703)	79,901
Special permits and fees	53,000	3,000	2,190	(810)	5,220
Franchise fees	384,000	384,000	397,860	13,860	397,894
Carlines taxes	100	100	95	(5)	97
Total licenses and permits	1,024,400	1,012,000	1,023,155	11,155	1,012,930
Intergovernmental revenue					
State consolidated revenue	2,721,800	2,721,800	2,844,516	122,716	2,760,581
1.75 cent gas tax	35,400	35,400	34,084	(1,316)	36,503
2.35 cent gas tax	49,500	49,500	49,476	(24)	48,942
County road tax	24,800	24,800	24,215	(585)	26,007
County transportation funds	190,000	188,300	188,289	(11)	184,179
County gaming tax	430,500	370,000	429,278	59,278	457,909
Federal/state grants	209,400	128,100	123,892	(4,208)	50,459
Infrastructure tax	75,000	75,000	75,101	101	75,101
Marijuana revenue disbursement	8,000	6,000	-	(6,000)	5,485
Reimbursement from Elko County	176,700	140,400	180,300	39,900	140,400
Total intergovernmental revenue	3,921,100	3,739,300	3,949,151	209,851	3,785,566
Charges for services					
Special police services	2,000	2,000	1,800	(200)	4,710
Work cards	6,500	6,500	6,070	(430)	4,070
Special fire protection services	10,000	10,000	9,717	(283)	17,968
Dispatch fees	10,000	5,600	5,716	116	5,616
Animal shelter fees	3,000	1,800	1,888	88	2,212
Pipeline administrative services	1,900	1,900	1,900	-	1,900
Miscellaneous	15,500	15,600	12,309	(3,291)	14,256
Total general	48,900	43,400	39,400	(4,000)	50,732
Fines and forfeitures					
Fines and fees	88,000	65,160	67,938	2,778	82,892
Total fines and forfeitures	88,000	65,160	67,938	2,778	82,892
Miscellaneous					
Interest	4,500	11,000	11,595	595	5,725
Donations	163,000	173,500	173,136	(364)	163,804
Rents and royalties	8,900	27,900	26,232	(1,668)	10,955
Miscellaneous	6,000	7,000	6,225	(775)	6,601
Total miscellaneous	182,400	219,400	217,188	(2,212)	187,085
Total revenues	6,780,600	6,595,060	6,831,200	236,140	6,622,885

(continued)

CITY OF WEST WENDOVER, NEVADA
General Fund
Schedule of Revenues, Expenditures, and Changes in Fund Balance
Budget and Actual
For the Year Ended June 30, 2019
(With Comparative Actual Amounts for the Year Ended June 30, 2018), Continued

	Original Budget	Final Budget	Actual	Variance with Final Budget	2018
Expenditures					
General government					
Administration and finance					
Salaries and wages	416,800	416,800	424,317	(7,517)	503,993
Employee benefits	191,100	191,100	184,186	6,914	246,238
Services and supplies	385,500	545,600	496,895	48,705	462,105
Total administration and finance	993,400	1,153,500	1,105,398	48,102	1,212,336
Elections					
Services and supplies	1,400	1,400	1,316	84	-
Total general government	994,800	1,154,900	1,106,714	48,186	1,212,336
Judicial					
Municipal court					
Salaries and wages	207,500	207,500	202,798	4,702	209,857
Employee benefits	117,900	117,900	114,968	2,932	75,342
Services and supplies	54,700	56,300	52,884	3,416	47,943
Total judicial	380,100	381,700	370,650	11,050	333,142
Public safety					
Police					
Salaries and wages	1,285,900	1,190,600	1,038,308	152,292	1,346,406
Employee benefits	728,400	660,100	563,232	96,868	431,104
Services and supplies	257,800	355,350	286,286	69,064	199,860
Capital outlay	85,000	84,000	78,595	5,405	39,230
Total police department	2,357,100	2,290,050	1,966,421	323,629	2,016,600
Fire					
Salaries and wages	443,000	399,000	391,512	7,488	509,107
Employee benefits	242,300	224,800	202,542	22,258	150,363
Services and supplies	96,300	110,300	86,315	23,985	88,981
Total fire department	781,600	734,100	680,369	53,731	748,451
Dispatch center					
Salaries and wages	316,300	316,300	246,102	70,198	309,225
Employee benefits	161,800	167,300	135,415	31,885	99,703
Services and supplies	59,700	49,700	46,063	3,637	40,183
Total dispatch center	537,800	533,300	427,580	105,720	449,111
Total public safety	3,676,500	3,557,450	3,074,370	483,080	3,214,162
Public works					
Paved streets					
Salaries and wages	63,700	30,000	23,853	6,147	23,978
Employee benefits	31,900	19,400	11,176	8,224	7,881
Services and supplies	140,100	141,400	147,754	(6,354)	136,616
Total paved streets	235,700	190,800	182,783	8,017	168,475

(continued)

CITY OF WEST WENDOVER, NEVADA
General Fund
Schedule of Revenues, Expenditures, and Changes in Fund Balance
Budget and Actual
For the Year Ended June 30, 2019
(With Comparative Actual Amounts for the Year Ended June 30, 2018), Continued

	Original Budget	Final Budget	Actual	Variance with Final Budget	2018
General					
Salaries and wages	229,400	267,400	216,950	50,450	247,158
Employee benefits	114,600	131,600	111,622	19,978	85,070
Services and supplies	30,300	31,300	34,080	(2,780)	24,316
Total general	374,300	430,300	362,652	67,648	356,544
Total public works	610,000	621,100	545,435	75,665	525,019
Community development					
Salaries and wages	152,500	140,000	134,319	5,681	149,921
Employee benefits	68,000	69,900	56,126	13,774	35,944
Services and supplies	153,200	94,000	72,717	21,283	76,045
Total community development	373,700	303,900	263,162	40,738	261,910
Health					
Public health services					
Services and supplies	22,400	10,500	6,025	4,475	8,826
Animal control					
Salaries and wages	60,600	60,600	60,699	(99)	68,053
Employee benefits	33,600	33,600	28,278	5,322	19,282
Services and supplies	23,700	25,300	22,472	2,828	23,057
Total animal control	117,900	119,500	111,449	12,526	110,392
Total health	140,300	130,000	117,474	17,001	119,218
Culture and recreation					
Library service					
Services and supplies	17,600	15,900	14,474	1,426	13,116
Total culture and recreation	17,600	15,900	14,474	1,426	13,116
Community support					
Miscellaneous					
Services and supplies	30,000	36,000	35,269	731	15,015
Total community support	30,000	36,000	35,269	731	15,015
Debt services	55,400	55,400	55,401	(1)	119,238
Total expenditures	6,278,400	6,256,350	5,582,949	677,876	5,813,156
Excess (deficiency) of revenues over (under) expenditures	502,200	338,710	1,248,251	(909,541)	809,729
Other financing sources (uses)					
Transfers in	-	-	-	-	-
Transfers out	(730,000)	(370,400)	(401,500)	(31,100)	(682,100)
Total other financing sources and uses	(730,000)	(370,400)	(401,500)	(31,100)	(682,100)
Net change in fund balance	(227,800)	(31,690)	846,751	878,441	127,629
Fund balance, beginning of year	1,054,510	1,054,510	1,054,510	-	926,883
Fund balance, end of year	$ 826,710	$ 1,022,820	$ 1,901,261	$ 878,441	$ 1,054,510

CITY OF WEST WENDOVER, NEVADA
Recreation Fund
Schedule of Revenues, Expenditures, and Changes in Fund Balance
Budget and Actual
For the Year Ended June 30, 2019
(With Comparative Actual Amounts for the Year Ended June 30, 2018)

	Original Budget	Final Budget	Actual	Variance with Final Budget	2018
Revenues					
Taxes					
Room taxes	$ 2,462,400	$ 2,337,007	$ 2,242,802	$ (94,205)	$ 2,389,961
Total revenues	2,462,400	2,337,007	2,242,802	(94,205)	2,389,961
Expenditures					
Culture and recreation					
Room tax distribution	2,491,300	2,383,000	2,265,856	117,144	2,394,512
Total culture and recreation	2,491,300	2,383,000	2,265,856	117,144	2,394,512
Total expenditures	2,491,300	2,383,000	2,265,856	117,144	2,394,512
Excess (deficiency) of revenues over (under) expenditures	(28,900)	(45,993)	(23,054)	22,939	(4,551)
Other financing sources (uses)					
Transfers in	-	-	-	-	-
Transfers out	-	-	-	-	-
Total other financing sources and uses	-	-	-	-	-
Net change in fund balance	(28,900)	(45,993)	(23,054)	22,939	(4,551)
Fund balance, beginning of year	157,617	157,617	157,617	-	162,168
Fund balance, end of year	$ 128,717	$ 111,624	$ 134,563	$ 22,939	$ 157,617

CITY OF WEST WENDOVER, NEVADA
Schedule of the Proportionate Share of the Net Pension Liability
Public Employees' Retirement System of Nevada
June 30, 2019
Last 10 Fiscal Years

	Reporting Fiscal Year (Measurement Date)				
	2019 (2018)	**2018 (2017)**	**2017 (2016)**	**2016 (2015)**	**2015 (2014)**
Proportion of the net pension liability (asset)	0.062480%	0.062300%	0.063600%	0.059820%	0.068384%
Proportionate share of the net pension liability (asset)	$ 8,521,101	$ 8,286,307	$ 8,558,081	$ 6,854,700	$ 6,653,165
Covered payroll	$ 3,327,353	$ 3,429,997	$ 3,355,482	$ 2,961,477	$ 3,113,721
Proportionate share of the net pension liability (asset) as a percentage of its covered payroll	256.09%	241.58%	255.05%	231.46%	213.67%
Plan fiduciary net position as a percentage of the total pension liability	75.2%	74.4%	72.2%	75.1%	76.30%

The City implemented GASB 68 in fiscal year 2015. Prior year information is not available.

CITY OF WEST WENDOVER, NEVADA
Schedule of Contributions
Public Employees' Retirement System of Nevada
June 30, 2019
Last 10 Fiscal Years

	Reporting Fiscal Year				
	2019	**2018**	**2017**	**2016**	**2015**
Contractually required contribution	$ 545,004	$ 579,653	$ 559,234	$ 539,193	$ 461,652
Contributions in relation to the contractually required contribution	$ (545,004)	$ (579,653)	$ (559,234)	$ (539,193)	$ (461,652)
Contribution deficiency (excess)	$ -	$ -	$ -	$ -	$ -
Covered payroll	$ 3,394,178	$ 3,327,353	$ 3,429,997	$ 3,355,482	$ 2,961,477
Contributions as a percentage of covered-employee payroll	16.06%	17.42%	16.30%	16.07%	15.59%

Note: The entity implemented GASB 68 in fiscal year 2015. Prior year information is not available.

The City implemented GASB 68 in fiscal year 2015. Prior year information is not available.

** All contributions shown reflect employer-paid contributions only. Member contributions are excluded. All values are restated due to GASB No. 82, which classifies contributions as member contributions for the purposes of GASB No. 68 if they are made by an employer to satisfy what are actually deemed to be member contribution requirements.*

This page left intentionally blank

SUPPLEMENTARY INFORMATION

NONMAJOR GOVERNMENTAL FUNDS

Special revenue funds are used to account for specific revenues that are legally restricted to expenditure for particular purposes.

The **Seizure and Forfeiture Fund** is used to account for seizures and forfeitures received by the City under City Resolution 1992-09, as provided for in NRS 179.1187

The **Court Administrative Assessment Fund** is used to account for fees collected by the court as required by Nevada Revised Statues Section 176.059, which are used to improve the operations of the court.

The **Welcome Center Fund** is used to account for the merchandise sales and operations of the Welcome Center as established under City Resolution 2001-04.

The **Wendover Will Landmark Fund** is used to account for the construction, maintenance, and related revenues and expenditures associated with the Wendover Will Landmark as established by City Resolution 2005-01.

The **Grant Fund** is used to account for various grants receipts and expenditures as outlined in Resolution 1996-14.

Capital project funds are used to account for the acquisition and construction of major capital facilities other than those financed by proprietary funds.

The **Capital Projects Fund** is used to account for the acquisition or construction of capital facilities as outlined in Resolution 1997-14.

The **Ad Valorem Capital Projects Fund** is used to account for revenue received from a special ad valorem tax that must be recorded in a capital projects fund and dedicated to capital project needs within the City, as established under NRS 268.045.

CITY OF WEST WENDOVER, NEVADA
Combining Balance Sheet
Nonmajor Governmental Funds
June 30, 2019

	Special Revenue					Capital Project		Total
	Seizure Forfeiture Fund	Court Administrative Assessment Fund	Welcome Center Fund	Wendover Will Landmark Fund	Grant Fund	Capital Projects Fund	Ad Valorem Capital Projects Fund	Nonmajor Governmental Funds
Assets								
Cash and investments	$ 25,226	$ 48,976	$ 843	$ 9,705	$ -	$ 142,563	$ 16,387	$ 243,700
Due from other funds	-	-	-	-	-	-	-	-
Due from other governments	-	-	57,000	-	-	-	12,174	69,174
Inventory	-	-	1,305	-	-	-	-	1,305
Restricted cash	-	-	-	-	-	308,275	-	308,275
Total assets	$ 25,226	$ 48,976	$ 59,148	$ 9,705	$ -	$ 450,838	$ 28,561	$ 622,454
Liabilities								
Accounts payable	$ 21,439	$ -	$ 543	$ 183	$ -	$ 4,763	$ -	$ 26,928
Accrued liabilities	-	-	-	-	-	-	-	-
Due to other funds	-	-	-	-	-	-	-	-
Total liabilities	21,439	-	543	183	-	4,763	-	26,928
Fund Balances								
Nonspendable	-	-	1,305	-	-	-	-	1,305
Restricted	3,787	48,976	57,300	-	-	446,075	28,561	584,699
Committed	-	-	-	9,522	-	-	-	9,522
Unassigned	-	-	-	-	-	-	-	-
Total fund balances	3,787	48,976	58,605	9,522	-	446,075	28,561	595,526
Total liabilities and fund balances	$ 25,226	$ 48,976	$ 59,148	$ 9,705	$ -	$ 450,838	$ 28,561	$ 622,454

CITY OF WEST WENDOVER, NEVADA
Combining Statement of Revenues, Expenditures, and Changes in Fund Balances
Nonmajor Governmental Funds
For the Year Ended June 30, 2019

	Seizure Forfeiture Fund	Court Administrative Assessment Fund	Welcome Center Fund	Wendover Will Landmark Fund	Grant Fund	Capital Projects Fund	Ad Valorem Capital Projects Fund	Total Nonmajor Governmental Funds
Revenues								
Other taxes	$ -	$ -	$ -	$ -	$ -	$ -	$ 48,464	$ 48,464
Intergovernmental	-	-	145,000	-	-	-	-	145,000
Charges for services	-	8,633	-	-	-	-	-	8,633
Miscellaneous	-	453	2,835	1,308	-	718,107	-	722,703
Total revenues	-	9,086	147,835	1,308	-	718,107	48,464	924,800
Expenditures								
Judicial	-	5,837	-	-	-	-	-	5,837
Community support	-	-	273,321	18,411	-	-	-	291,732
Capital outlay	-	-	-	-	-	45,015	-	45,015
Debt service	-	-	-	-	-	795,007	-	795,007
Total expenditures	-	5,837	273,321	18,411	-	840,022	-	1,137,591
Excess (deficiency) of revenues over (under) expenditures	-	3,249	(125,486)	(17,103)	-	(121,915)	48,464	(212,791)
Other financing sources (uses)								
Transfers in	-	-	177,000	24,500	-	250,000	-	451,500
Transfers out	-	-	-	-	-	-	(50,000)	(50,000)
Total other financing sources (uses)	-	-	177,000	24,500	-	250,000	(50,000)	401,500
Net change in fund balances	-	3,249	51,514	7,397	-	128,085	(1,536)	188,709
Fund balances, beginning of year	3,787	45,727	7,091	2,125	-	317,990	30,097	406,817
Fund balances, end of year	$ 3,787	$ 48,976	$ 58,605	$ 9,522	$ -	$ 446,075	$ 28,561	$ 595,526

CITY OF WEST WENDOVER, NEVADA
Seizure Forfeiture Fund
Schedule of Revenues, Expenditures, and Changes in Fund Balance
Budget and Actual
For the Year Ended June 30, 2019
(With Comparative Actual Amounts for the Year Ended June 30, 2018)

	Original Budget	Final Budget	Actual	Variance with Final Budget	2018
Revenues					
Miscellaneous					
Interest income	$ 100	$ -	$ -	$ -	$ 166
Total revenues	100	-	-	-	166
Expenditures					
Public Safety					
Services and supplies	200	-	-	-	-
Total expenditures	200	-	-	-	-
Excess of revenues over (under) expenditures	(100)	-	-	-	166
Other financing sources					
Transfers in	-	-	-	-	-
Transfers out	-	-	-	-	-
Net change in fund balance	(100)	-	-	-	166
Fund balance, beginning of year	3,787	3,787	3,787	-	3,621
Fund balance, end of year	$ 3,687	$ 3,787	$ 3,787	$ -	$ 3,787

CITY OF WEST WENDOVER, NEVADA
Court Administrative Assessments Fund
Schedule of Revenues, Expenditures, and Changes in Fund Balance
Budget and Actual
For the Year Ended June 30, 2019
(With Comparative Actual Amounts for the Year Ended June 30, 2018)

	Original Budget	Final Budget	Actual	Variance with Final Budget	2018
Revenues					
Charges for services					
Court assessments	$ 12,500	$ 8,100	$ 8,633	$ 533	$ 9,794
Miscellaneous					
Interest	100	450	453	3	286
Total revenues	12,600	8,550	9,086	536	10,080
Expenditures					
Judicial					
Services and supplies	1,000	2,450	3,184	(734)	1,373
Capital outlay	-	2,700	2,653	47	2,778
Total expenditures	1,000	5,150	5,837	(687)	4,151
Excess of revenue and other sources over (under) expenditures	11,600	3,400	3,249	1,223	5,929
Other financing sources					
Transfers in	-	5,900	-	(5,900)	-
Net change in fund balance	11,600	9,300	3,249	(4,677)	5,929
Fund balance, beginning of year	45,727	45,727	45,727	-	39,798
Fund balance, end of year	$ 57,327	$ 55,027	$ 48,976	$ (6,051)	$ 45,727

CITY OF WEST WENDOVER, NEVADA
Welcome Center Fund
Schedule of Revenues, Expenditures, and Changes in Fund Balance
Budget and Actual
For the Year Ended June 30, 2019
(With Comparative Actual Amounts for the Year Ended June 30, 2018)

	Original Budget	Final Budget	Actual	Variance with Final Budget	2018
Revenues					
Intergovernmental					
Operating grants	$ 70,000	$ 57,000	$ 57,000	$ -	$ 43,300
Elko county recreation board	88,000	88,000	88,000	-	88,000
Total intergovernmental	158,000	145,000	145,000	-	131,300
Miscellaneous					
Merchandise sales	8,000	4,000	2,835	(1,165)	4,802
Total miscellaneous	8,000	4,000	2,835	(1,165)	4,802
Total revenues	166,000	149,000	147,835	(1,165)	136,102
Expenditures					
Community support					
Salaries and wages	97,600	97,600	97,135	465	104,738
Employee benefits	51,700	51,700	45,877	5,823	34,018
Services and supplies	51,600	53,400	48,618	4,782	44,687
Capital outlay	80,000	80,000	81,691	(1,691)	64,284
Total expenditures	280,900	282,700	273,321	9,379	247,727
Excess of revenues over (under) expenditures	(114,900)	(133,700)	(125,486)	8,214	(111,625)
Other financing sources					
Transfers in	110,000	140,000	177,000	37,000	111,700
Net change in fund balance	(4,900)	6,300	51,514	45,214	75
Fund balance, beginning of year	7,091	7,091	7,091	-	7,016
Fund balance, end of year	$ 2,191	$ 13,391	$ 58,605	$ 45,214	$ 7,091

CITY OF WEST WENDOVER, NEVADA
Wendover Will Landmark Fund
Schedule of Revenues, Expenditures, and Changes in Fund Balance
Budget and Actual
For the Year Ended June 30, 2019
(With Comparative Actual Amounts for the Year Ended June 30, 2018)

	Original Budget	Final Budget	Actual	Variance with Final Budget	2018
Revenues					
Miscellaneous					
Donations from private sources	$ 1,000	$ -	$ -	$ -	$ 390
Merchandise sales	3,000	1,000	945	(55)	-
Interest revenue	200	400	363	(37)	117
Total revenues	4,200	1,400	1,308	(92)	507
Expenditures					
Community Support					
Services and supplies	25,000	19,800	18,411	1,389	17,511
Total expenditures	25,000	19,800	18,411	1,389	17,511
Excess of revenues over (under) expenditures	(20,800)	(18,400)	(17,103)	1,297	(17,004)
Other financing sources					
Transfers in	20,000	24,500	24,500	-	17,100
Net change in fund balance	(800)	6,100	7,397	1,297	96
Fund balance, beginning of year	2,125	2,125	2,125	-	2,029
Fund balance, end of year	$ 1,325	$ 8,225	$ 9,522	$ 1,297	$ 2,125

CITY OF WEST WENDOVER, NEVADA
Grant Fund
Schedule of Revenues, Expenditures, and Changes in Fund Balance
Budget and Actual
For the Year Ended June 30, 2019
(With Comparative Actual Amounts for the Year Ended June 30, 2018)

	Original Budget	Final Budget	Actual	Variance with Final Budget	2018
Revenues					
Intergovernmental					
CDBG grants	$ -	$ -	$ -	$ -	$ -
Other grant revenue	-	-	-	-	-
Total intergovernmental	-	-	-	-	-
Total revenues	-	-	-	-	-
Expenditures					
Public works					
Capital outlay	-	-	-	-	-
Total public works	-	-	-	-	-
Total expenditures	-	-	-	-	-
Deficiency of revenues under expenditures	-	-	-	-	-
Other financing sources (uses)					
Transfers in	-	-	-	-	-
Transfers out	-	-	-	-	-
Total other financing sources and uses	-	-	-	-	-
Net change in fund balance	-	-	-	-	-
Fund balance, beginning of year	-	-	-	-	
Fund balance, end of year	$ -	$ -	$ -	$ -	$ -

CITY OF WEST WENDOVER, NEVADA
Capital Projects Fund
Schedule of Revenues, Expenditures, and Changes in Fund Balance
Budget and Actual
For the Year Ended June 30, 2019
(With Comparative Actual Amounts for the Year Ended June 30, 2018)

	Original Budget	Final Budget	Actual	Variance with Final Budget	2018
Revenues					
Intergovernmental					
Federal grants	$ -	$ -	$ -	$ -	$ -
Total intergovernmental	-	-	-	-	-
Miscellaneous					
Interest income	-	1,400	1,532	132	1,140
Miscellaneous	2,500	3,500	3,471	(29)	2,312
Sale of capital assets	200,000	713,100	713,104	4	233,164
Total miscellaneous	202,500	718,000	718,107	107	236,616
Total revenues	202,500	718,000	718,107	107	236,616
Expenditures					
General government					
Capital outlay	100,000	163,000	45,015	117,985	6,550
Total general government	100,000	163,000	45,015	117,985	6,550
Debt service					
Debt service - principal	564,400	564,400	562,583	1,817	540,964
Debt service - interest	230,600	230,600	232,424	(1,824)	251,256
Total debt service	795,000	795,000	795,007	(7)	792,220
Total expenditures	895,000	958,000	840,022	117,978	798,770
Excess of revenues over (under) expenditures	(692,500)	(240,000)	(121,915)	118,085	(562,154)
Other financing sources (uses)					
Transfers in	650,000	250,000	250,000	-	608,300
Transfers out	-	-	-	-	-
Total other financing sources	650,000	250,000	250,000	-	608,300
Net change in fund balance	(42,500)	10,000	128,085	118,085	46,146
Fund balance, beginning of year	317,990	317,990	317,990	-	271,844
Fund balance, end of year	$ 275,490	$ 327,990	$ 446,075	$ 118,085	$ 317,990

CITY OF WEST WENDOVER, NEVADA
Ad Valorem Capital Projects Fund
Schedule of Revenues, Expenditures, and Changes in Fund Balance
Budget and Actual
For the Year Ended June 30, 2019
(With Comparative Actual Amounts for the Year Ended June 30, 2018)

	Original Budget	Final Budget	Actual	Variance with Final Budget	2018
Revenues					
Other taxes					
Ad valorem tax	$ 50,000	$ 50,000	$ 48,464	$ (1,536)	$ 50,279
Total revenues	50,000	50,000	48,464	(1,536)	50,279
Expenditures					
	-	-	-	-	-
Total expenditures	-	-	-	-	-
Excess of revenues over (under) expenditures	50,000	50,000	48,464	(1,536)	50,279
Other financing sources (uses)					
Transfers out	(50,000)	(50,000)	(50,000)	-	(55,000)
Net change in fund balance	-	-	(1,536)	(1,536)	(4,721)
Fund balance, beginning of year	30,097	30,097	30,097	-	34,818
Fund balance, end of year	$ 30,097	$ 30,097	$ 28,561	$ (1,536)	$ 30,097

MAJOR BUSINESS-TYPE FUNDS

CITY OF WEST WENDOVER, NEVADA
Water Fund
Schedule of Revenues, Expenditures, and Changes in Net Position
Budget and Actual
For the Year Ended June 30, 2019
(With Comparative Actual Amounts for the Year Ended June 30, 2018)

	Original Budget	Final Budget	Actual	Variance with Final Budget	2018
Operating revenues					
Charges for services	$ 1,327,300	$ 1,325,700	$ 1,311,566	$ (14,134)	$ 1,225,277
Total operating revenues	1,327,300	1,325,700	1,311,566	(14,134)	1,225,277
Operating expenses					
Water purchases	595,000	603,000	528,129	74,871	518,296
Salaries and wages	181,600	223,077	213,542	9,535	197,361
Employee benefits	87,200	100,500	114,733	(14,233)	53,383
Services and supplies	327,300	330,000	287,440	42,560	312,598
Depreciation and amortization	137,100	137,100	138,001	(901)	139,954
Total operating expenses	1,328,200	1,393,677	1,281,845	111,832	1,221,592
Operating income	(900)	(67,977)	29,721	97,698	3,685
Nonoperating revenues (expenses)					
Interest income	113,200	121,200	123,037	1,837	119,948
Impact fees	20,000	67,000	66,586	(414)	16,556
Grant revenue	-	-	-	-	1,020
Miscellaneous income	20,000	12,500	9,920	(2,580)	13,905
Contributions from component unit for debt payments	9,000	9,000	10,584	1,584	10,584
Capital outlay	(1,000)	(1,000)	(124)	876	(168)
Interest expense	(141,600)	(141,600)	(132,540)	9,060	(159,011)
Total nonoperating revenues (expenses)	19,600	67,100	77,463	10,363	2,834
Income (loss) before transfers	18,700	(877)	107,184	108,061	6,519
Transfers:					
Transfers in	-	-	-	-	-
Transfers out	-	-	-	-	-
Change in net position	18,700	(877)	107,184	108,061	6,519
Total net position, beginning of year	3,743,037	3,743,037	3,743,037	-	3,769,041
Restatement adjustment	-	-		-	(32,523)
Total net position, end of year	$ 3,761,737	$ 3,742,160	$ 3,850,221	$ 108,061	$ 3,743,037

CITY OF WEST WENDOVER, NEVADA
Sewer Fund
Schedule of Revenues, Expenditures, and Changes in Net Position
Budget and Actual
For the Year Ended June 30, 2019
(With Comparative Actual Amounts for the Year Ended June 30, 2018)

	Original Budget	Final Budget	Actual	Variance with Final Budget	2018
Operating revenues					
Charges for services:					
Charges for services	$ 1,121,500	$ 1,224,700	$ 1,223,089	$ (1,611)	$ 1,107,240
Total operating revenues	1,121,500	1,224,700	1,223,089	(1,611)	1,107,240
Operating expenses					
Salaries and wages	329,000	329,000	335,705	(6,705)	358,093
Employee benefits	156,200	180,900	183,735	(2,835)	131,608
Services and supplies	505,700	508,600	475,062	33,538	456,498
Capital outlay	23,000	23,000	-	23,000	12,673
Depreciation and amortization	544,400	546,600	554,965	(8,365)	548,215
Total operating expenses	1,558,300	1,588,100	1,549,467	38,633	1,507,087
Operating loss	(436,800)	(363,400)	(326,378)	37,022	(399,847)
Nonoperating revenues (expenses)					
Interest income	-	2,000	2,062	62	1,470
Impact fees	20,000	(52,400)	52,324	104,724	9,805
Grant revenue	-	-	-	-	340
Miscellaneous income	1,500	1,750	2,349	599	706
Interest expense	(76,000)	(76,000)	(76,252)	(252)	(85,088)
Total nonoperating revenues	(54,500)	(124,650)	(19,517)	105,133	(72,767)
Income (loss) before transfers	(491,300)	(488,050)	(345,895)	142,155	(472,614)
Transfers:					
Transfers in	-	-	-	-	-
Transfers out	-	-	-	-	-
Change in net position	(491,300)	(488,050)	(345,895)	142,155	(472,614)
Total net position, beginning of year	9,221,275	9,221,275	9,221,275	-	9,733,237
Restatement adjustment	-	-	-	-	(39,348)
Total net position, end of year	$ 9,221,275	$ 9,221,275	$ 8,875,380	$ (345,895)	$ 9,221,275

CITY OF WEST WENDOVER, NEVADA
Garbage / Compost Facility Fund
Schedule of Revenues, Expenditures, and Changes in Net Position
Budget and Actual
For the Year Ended June 30, 2019
(With Comparative Actual Amounts for the Year Ended June 30, 2018)

	Original Budget	Final Budget	Actual	Variance with Final Budget	2018
Operating revenues					
Charges for services	$ 1,453,900	$ 1,438,700	$ 1,427,019	$ (11,681)	$ 1,432,608
Total operating revenues	1,453,900	1,438,700	1,427,019	(11,681)	1,432,608
Operating expenses					
Salaries and wages	361,000	361,000	277,179	83,821	349,029
Employee benefits	174,800	192,800	143,187	49,613	126,961
Services and supplies	272,400	284,600	223,840	60,760	219,195
Capital outlay	20,000	23,000	6,240	16,760	-
Depreciation and amortization	310,100	317,200	335,366	(18,166)	326,087
Total operating expenses	1,138,300	1,178,600	985,812	192,788	1,021,272
Operating income	315,600	260,100	441,207	181,107	411,336
Nonoperating revenues (expenses)					
Interest income	500	500	6,545	6,045	2,876
Miscellaneous income	-	3,000	2,522	(478)	7,616
Interest expense	(37,700)	(43,100)	(26,244)	16,856	(32,928)
Total nonoperating expenses	(37,200)	(39,600)	(17,177)	22,423	(22,436)
Income before transfers	278,400	220,500	424,030	203,530	388,900
Transfers:					
Transfers in	-	-	-	-	-
Transfers out	-	-	-	-	-
Change in net position	278,400	220,500	424,030	203,530	388,900
Total net position, beginning of year	3,180,700	3,180,700	3,180,700	-	2,830,242
Restatement adjustment	-	-	-	-	(38,442)
Total net position, end of year	$ 3,459,100	$ 3,401,200	$ 3,604,730	$ 203,530	$ 3,180,700

COMPONENT UNIT SUPPLEMENTARY SCHEDULES

CITY OF WEST WENDOVER, NEVADA
Component Unit – Johnson Springs
Statement of Net Position
For the Year Ended June 30, 2019

	Component Unit Johnson Springs
Assets	
Current assets	
Cash and investments	$ 167,071
Accounts receivable, net	59,314
Inventory	13,389
Total current assets	239,774
Noncurrent assets	
Land	18,000
Buildings	6,836,936
Improvements other than buildings	411,632
Machinery and equipment	571,254
Utility system	5,305,132
Less accumulated depreciation	(6,829,969)
Total noncurrent assets	6,312,985
Total assets	6,552,759
Deferred Outflows of Resources	
Deferred outflows related to pensions	30,417
Liabilities	
Current liabilities	
Accounts payable	53,181
Accrued liabilities	1,687
Due to primary government	2,268,160
Compensated absences	11,155
Total current liabilities	2,334,183
Noncurrent liabilities:	
Net pension liability	167,949
Total noncurrent liabilities	167,949
Total liabilities	2,502,132
Deferred Inflows of Resources	
Deferred inflows related to pensions	14,932
Net Position	
Net investment in capital assets	4,044,825
Unrestricted	21,287
Total net position	$ 4,066,112

CITY OF WEST WENDOVER, NEVADA
Component Unit – Johnson Springs
Schedule of Revenues, Expenditures, and Changes in Net Position
Budget and Actual
For the Year Ended June 30, 2019
(With Comparative Actual Amounts for the Year Ended June 30, 2018)

	Original Budget	Final Budget	Actual	Variance with Final Budget	2018
Operating revenues					
Charges for services	$ 706,900	$ 676,000	$ 687,579	$ 11,579	$ 652,108
Total operating revenues	706,900	676,000	687,579	11,579	652,108
Operating expenses					
Water purchases	115,000	115,000	136,817	(21,817)	111,405
Salaries and wages	44,200	44,200	32,018	12,182	72,955
Employee benefits	20,200	40,200	(8,108)	48,308	43,015
Services and supplies	289,500	347,600	267,552	80,048	262,675
Depreciation and amortization	381,400	392,300	383,516	8,784	392,292
Total operating expenses	850,300	939,300	811,795	127,505	882,342
Operating loss	(143,400)	(263,300)	(124,216)	139,084	(230,234)
Nonoperating revenues (expenses)					
Interest income	4,000	34,600	31,687	(2,913)	19,001
Miscellaneous income	12,000	12,000	12,001	1	-
Debt paid through primary government	(9,000)	(9,000)	(10,584)	(1,584)	(10,584)
Interest expense	(108,200)	(108,200)	(107,585)	615	(109,128)
Total nonoperating revenues (expenses)	(101,200)	(70,600)	(74,481)	(3,881)	(100,711)
Loss before transfers	(244,600)	(333,900)	(198,697)	135,203	(330,945)
Transfers:					
Transfers in	-	-	-	-	-
Transfers out	-	-	-	-	-
Change in net position	(244,600)	(333,900)	(198,697)	135,203	(330,945)
Total net position, beginning of year	4,264,809	4,264,809	4,264,809	-	4,609,596
Total net position, end of year	$ 4,020,209	$ 3,930,909	$ 4,066,112	$ 135,203	$ 4,264,809

CITY OF WEST WENDOVER, NEVADA
Component Unit – Johnson Springs
Statement of Cash Flows
June 30, 2019

	Component Unit Johnson Springs
Cash Flows From Operating Activities:	
Cash received from customers, service fees	$ 685,899
Cash paid to suppliers	(380,789)
Cash paid to employees	(44,194)
Net cash flows from operating activities	260,916
Cash Flows From Noncapital Financing Activities:	
Net interfund receipts/(payments)	-
Net component unit receipts/(payments)	(80,069)
Cash received from miscellaneous sources	12,001
Transfers from other funds	-
Net cash flows from noncapital financing activities	(68,068)
Cash Flows From Capital and Related Financing Activities:	
Interest paid on capital debt	(107,585)
Acquisition and construction of capital assets	(64,903)
Net cash flows from capital and related financing activities	(172,488)
Cash Flows From Investing Activities:	
Interest income	31,687
Net change in cash and cash equivalents	52,047
Cash and investments, including restricted cash, beginning of year	115,024
Cash and Cash Equivalents, Including Restricted Cash , End of Year	$ 167,071
Reconciliation of operating income to net cash flows from operating activities:	
Operating income (loss)	$ (124,216)
Adjustments to reconcile net income (loss) to net cash from operating activities	
Depreciation/amortization	383,516
Pension expense	(11,236)
Employer pension contributions	(10,742)
Changes in operating assets and liabilities:	
(Increase) decrease in receivables	(1,680)
(Increase) decrease in inventory	-
(Increase) decrease in prepaid expenses	-
Increase (decrease) in accounts payable	23,580
Increase (decrease) in due from deposits	-
Increase (decrease) in compensated absences	1,694
Net cash flows from operating activities	$ 260,916

OTHER COMMUNICATIONS FROM INDEPENDENT AUDITORS

This page intentionally left blank

HINTON BURDICK
CPAs & ADVISORS

Independent Auditors' Report on Internal Control Over Financial Reporting and on Compliance and Other Matters Based on an Audit of Financial Statements Performed in Accordance with *Government Auditing Standards*

The Honorable Mayor and City Council
West Wendover, Nevada

We have audited, in accordance with the auditing standards generally accepted in the United States of America and the standards applicable to financial audits contained in *Government Auditing Standards* issued by the Comptroller General of the United States, the financial statements of the governmental activities, the business-type activities, the aggregate discretely presented component units, each major fund, and the aggregate remaining fund information of City of West Wendover, Nevada, as of and for the year ended June 30, 2019, and the related notes to the financial statements, which collectively comprise City of West Wendover, Nevada 's basic financial statements and have issued our report thereon dated October 30, 2019.

Internal Control Over Financial Reporting

In planning and performing our audit of the financial statements, we considered City of West Wendover, Nevada's internal control over financial reporting (internal control) to determine the audit procedures that are appropriate in the circumstances for the purpose of expressing our opinions on the financial statements, but not for the purpose of expressing an opinion on the effectiveness of City of West Wendover, Nevada's internal control. Accordingly, we do not express an opinion on the effectiveness of City of West Wendover, Nevada's internal control.

A *deficiency in internal control* exists when the design or operation of a control does not allow management or employees, in the normal course of performing their assigned functions, to prevent, or detect and correct, misstatements on a timely basis. A *material weakness* is a deficiency, or a combination of deficiencies, in internal control, such that there is a reasonable possibility that a material misstatement of the entity's financial statements will not be prevented, or detected and corrected on a timely basis. A *significant deficiency* is a deficiency, or a combination of deficiencies, in internal control that is less severe than a material weakness, yet important enough to merit attention by those charged with governance.

Our consideration of internal control was for the limited purpose described in the first paragraph of this section and was not designed to identify all deficiencies in internal control that might be material weaknesses or significant deficiencies and therefore, material weaknesses or significant deficiencies may exist that were not identified. Given these limitations, during our audit we did not identify any deficiencies in internal control that we consider to be material weaknesses. However, material weaknesses may exist that have not been identified. We did identify a deficiency in internal control, described in the accompanying letter of *Findings and Recommendations that* we consider to be a significant deficiency.

2019-001 Segregation of Duties

Compliance and Other Matters

As part of obtaining reasonable assurance about whether City of West Wendover, Nevada's financial statements are free from material misstatement, we performed tests of its compliance with certain provisions of laws, regulations, contracts, and grant agreements, noncompliance with which could have a direct and material effect on the determination of financial statement amounts. However, providing an opinion on compliance with those provisions was not an objective of our audit, and accordingly, we do not express such an opinion. The results of our tests disclosed no instances of noncompliance or other matters that are required to be reported under *Government Auditing Standards*.

Purpose of this Report

The purpose of this report is solely to describe the scope of our testing of internal control and compliance and the results of that testing, and not to provide an opinion on the effectiveness of the entity's internal control or on compliance. This report is an integral part of an audit performed in accordance with *Government Auditing Standards* in considering the entity's internal control and compliance. Accordingly, this communication is not suitable for any other purpose.



HintonBurdick, PLLC
St. George, Utah
October 30, 2019

HINTON BURDICK
CPAs & ADVISORS

Independent Auditor's Report on Compliance
With Statutes and Administrative Code in Accordance
With NRS 354.624(4) and 354.6241

The Honorable Mayor and City Council
West Wendover, NV

We have audited the basic financial statements of the City of West Wendover, Nevada for the year ended June 30, 2019, and have issued our report thereon dated October 30, 2019. Our audit also included test work on the City of West Wendover's compliance with selected requirements identified in the State of Nevada Revised Statutes (NRS) including, but not limited to, NRS section 354.624 and section 354.6241.

The management of the City of West Wendover is responsible for the City's compliance with all requirements identified above. Our responsibility is to express an opinion on compliance with those requirements based on our audit and make specific statements regarding funds established and the status of prior year findings and recommendations; accordingly, we make the following statements:

The City of West Wendover had one prior year compliance finding that was resolved during fiscal year 2019. We noted one new instance of noncompliance during fiscal year 2019. See note 3 on page 32.

The City of West Wendover has established several funds in accordance with NRS 354.624 as follows:

Enterprise Funds:
- Water Fund
- Sewer Fund
- Garbage / Compost Facility Fund

Funds whose balance is required to be used only for a specific purpose or carried forward to the succeeding fiscal year in any designated amount:

Special Revenue Funds:
- Seizure Forfeiture Fund
- Recreation Fund
- Court Administrative Assessment Fund
- Medical Clinic Facilities Fund (combined with the General Fund for reporting)
- Grants Fund
- Welcome Center Fund
- Wendover Will Landmark Fund

Capital Projects Funds:
- Capital Projects Fund
- Ad Valorem Capital Projects Fund

HintonBurdick.com 888-566-1277

The City of West Wendover appears to be using the above listed funds expressly for the purposes for which they were created and in accordance with NRS 354.624. The funds are being administered in accordance with Generally Accepted Accounting Principles and the reserves, as applicable, appear reasonable and necessary to carry out the purposes of the funds. Sources of revenues available and fund balances and net position are reflected in the individual fund financial statements.

The statutory and regulatory requirements of the funds are as follows:

Water Fund:	NRS 354.517
Sewer Fund:	NRS 354.517
Garbage / Compost Facility Fund:	NRS 354.517
Seizure Forfeiture Fund:	Resolution 1992-09
Recreation Fund:	NRS 268.798
Court Administrative Assessment Fund:	NRS 176.059
Grant Fund:	Resolution 1996-14
Welcome Center Fund:	Resolution 2001-04
Wendover Will Landmark Fund	Resolution 2005-01
Capital Projects Fund	Resolution 1997-14
Ad Valorem Capital Projects Fund	NRS 268.045

NRS 354.624 requires that a schedule of all fees imposed by the City which were subject to the provisions of NRS 354.5989 be provided. The City has not increased any fees subject to the limitations provided by NRS 354.5989; however the schedule for these fees immediately follows this report.

We conducted our audit in accordance with auditing standards generally accepted in the United States of America and *Government Auditing Standards*, issued by the Comptroller General of the United States. Those standards require that we plan and perform the audit to obtain reasonable assurance about whether material noncompliance with the requirements referred to above occurred. An audit includes examining, on a test basis, evidence about the City's compliance with those requirements. We believe that our audit provides a reasonable basis for our opinion.

In our opinion, The City of West Wendover, Nevada complied, in all material respects, with the requirements identified above for the year ended June 30, 2019.

Other Matters

The results of our auditing procedures disclosed instances of noncompliance, which are required to be reported in accordance with NRS 354.624 and 354.6241. Our finding is described in a separate schedule of findings and recommendations, as item 2018-001. Our opinion on compliance is not modified with respect to this matter.

The purpose of this report is solely to describe the scope of our testing of the applicable compliance requirements identified in the Nevada Revised Statutes (NRS) and the results of that testing based on the state requirements. Accordingly, this report is not suitable for any other purpose.

HintonBurdick, PLLC

HintonBurdick, PLLC
St. George, Utah
October 30, 2019

CITY OF WEST WENDOVER, NEVADA
Schedule of Fees Imposed Subject to the Provision of NRS 354.5989
Limitation on Fees for Business Licenses
For the Year ended June 30, 2019

Flat Fixed Fees:

Business license revenue adjusted base at June 30, 2018		21,321
Adjustment to Base:		
1. Percentage change in population of the local government	0.0%	
2. Percentage increase in the Consumer Price Index for the year ending on December 31, next preceding the year for which the limit is being calculated	1.9%	1.9%
Increase in base		405
Adjusted base at June 30, 2019		21,726
Actual revenue		17,005
Amount over (under) allowable amount		$ (4,721)

This page intentionally left blank

HINTON BURDICK
CPAs & ADVISORS

Findings and Recommendations
For the Fiscal Year Ended June 30, 2019

The Honorable Mayor and
City Council
City of West Wendover, Nevada

Professional standards require that we communicate, in writing; deficiencies in internal control over financial reporting that are considered significant deficiencies or material weaknesses that are identified during the audit of the financial statements. Nevada Revised Statutes (NRS) require us to report instances of noncompliance with laws and regulations. During our audit of the City of West Wendover, Nevada for the fiscal year ended June 30, 2019, we noted several improvements in the City's accounting and budgeting system and we wish to commend the City for their achievements. We also observed a few areas needing corrective action in order for the City to be in compliance with laws and regulations as well as a few areas that, if improved, would strengthen the City's accounting system and control over its assets. These items are discussed below for your consideration.

INTERNAL CONTROL OVER FINANCIAL REPORTING:

Material Weakness:

No items noted

Significant Deficiencies:

2019-001 Segregation of Duties

Criteria: An effective internal control structure, including adequate segregation of duties, should be implemented in order to properly safeguard City assets.

Condition: When certain staff are unavailable and while the City was hiring a new chief financial officer, the same individual would prepare the deposits for the bank, take the deposit to the bank, record journal entries in the accounting system and reconcile the bank statements. The City did have a secondary individual review the bank reconciliations and prepare the deposit each day to mitigate this weaknesses such that it is not deemed to be a material weakness.

Cause: The City did not follow established controls to properly segregate crucial accounting functions during fiscal year 2019.

Effect: A material misstatement, due to fraud or error, may not be prevented or detected in a timely manner. We choose to mention proper segregation in order to remind management of its importance until the City can fully segregate custody of assets and recording functions.

Recommendations: We recommend that the City not allow the same individual to have custody of assets, recording functions in the accounting system, and perform the bank reconciliations. We recommend having another person prepare and take the bank deposit other than the staff preparing the bank reconciliation and posting journal entries.

COMPLIANCE AND OTHER MATTERS:

Compliance:

2018-001 Budgetary Compliance

Criteria: NRS 354.626 states, "No governing body or member thereof, officer, office, department or agency may, during any fiscal year, expend or contract to expend any money or incur any liability, or enter into any contract which by its terms involves the expenditure of money, in excess of the amounts appropriated for that function,"

Condition: Expenditures in the Court Administrative Assessments Fund exceeded final budget appropriations for fiscal year 2019 by $687.

Cause: The City did not follow established controls to ensure compliance with NRS 354.626.

Effect: The City did not comply with Nevada Revised Statute (NRS) 354.626 for fiscal year 2019.

Recommendation: We recommend the City follow the established controls to ensure compliance with NRS 354.626.

Other Matters:

2019-001 Sewer Fund USDA Debt Covenants

Criteria: The USDA Series 2012 Sewer Bond covenants require certain ratios and metrics be maintained per the bond agreement.

Condition: We noted that the Sewer Fund is out of compliance with USDA debt covenants and required ratios.

Cause: The Sewer Fund did not have enough income from operations to cover the next year's debt service requirement. It appears the City did not follow and update established controls to ensure compliance with the criteria above.

Effect: The City is not in compliance with the bond covenants required by the USDA.

Recommendation: We recommend the City look at ways to increase revenues and reserves or decrease operating expenses in order to become compliant with the USDA debt covenants of the Sewer Bond and to update controls to ensure compliance with the debt covenants.

Responses

Please respond to the above Findings and Recommendations in letter form.

This report is intended solely for the information and use of the City Council, management, and various federal and state agencies and is not intended to be and should not be used by anyone other than these specified parties. However, this report is a matter of public record and its distribution is not limited.

It has been a pleasure to be of service to the City this past year. We would like to express special thanks to all those who assisted us so efficiently in this year's audit. We invite you to ask questions of us throughout the year as you feel necessary. We look forward to a continued professional relationship.

Sincerely,

Hinton Burdick, PLLC

HintonBurdick, PLLC
October 30, 2019

FINANCIAL STATEMENTS

FOR THE FISCAL YEAR ENDED JUNE 30, 2018

WITH REPORT OF

INDEPENDENT CERTIFIED PUBLIC ACCOUNTANTS

CITY OF WEST WENDOVER, NEVADA

Table of Contents

Page

FINANCIAL SECTION

Independent Auditors' Report....1

Management's Discussion and Analysis....5

Basic Financial Statements:

Government-wide Financial Statements:

Statement of Net Position....14

Statement of Activities....15

Fund Financial Statements:

Balance Sheet – Governmental Funds....16

Reconciliation of the Balance Sheets of Governmental Funds to the Statement of Net Position....17

Statement of Revenues, Expenditures, and Changes in Fund Balances – Governmental Funds....18

Reconciliation of the Statement of Revenues, Expenditures, and Changes in Fund Balances of Governmental Funds to the Statement of Activities....19

Statement of Net Position – Proprietary Funds....20

Statement of Revenues, Expenses, and Changes in Net Position – Proprietary Funds....21

Statement of Cash Flows – Proprietary Funds....22

Notes to the Financial Statements....23

Required Supplementary Information:

Schedules of Revenues, Expenditures, and Changes in Fund Balances – Budget and Actual

General Fund (Detailed)....56

Recreation Fund....59

Schedule of the Proportionate Share of the Net Pension Liability....60

Schedule of Contributions....61

CITY OF WEST WENDOVER, NEVADA

Table of Contents (Continued)

Supplementary Information

Combining and Individual Fund Statements and Schedules:
Combining Balance Sheet – Non-major Governmental Funds 64

Combining Statement of Revenues, Expenditures and Changes in
Fund Balances – Non-major Governmental Funds 65

Nonmajor Governmental Fund Schedules of Revenues, Expenditures, and
Changes in Fund Balances – Budget and Actual

Seizure Forfeiture Fund 66
Court Administrative Assessments Fund 67
Welcome Center Fund 68
Wendover Will Landmark Fund 69
Grant Fund 70
Capital Projects Fund 71
Ad Valorem Capital Projects Fund 72

Major Business-Type Funds:
Water fund:
Schedule of Revenues, Expenses – Budget and Actual 74
Sewer fund:
Schedule of Revenues, Expenses – Budget and Actual 75
Garbage / Compost Facility fund:
Schedule of Revenues, Expenses – Budget and Actual 76

Component Unit Supplementary Schedules:
Statement of Net Position 78
Schedule of Revenues, Expenses – Budget and Actual 79
Statement of Cash Flows 80

OTHER COMMUNICATIONS FROM INDEPENDENT AUDITORS:

Report on Internal Control over Financial Reporting and Compliance 83

Report on Compliance with State Fiscal Laws 85

Schedule of Fees Imposed Subject to the Provision of NRS 354.5989 87

FINANCIAL SECTION

This page intentionally left blank

HINTONBURDICK
CPAs & ADVISORS

Independent Auditors' Report

The Honorable Mayor and City Council
West Wendover, Nevada

Report on the Financial Statements

We have audited the accompanying financial statements of the governmental activities, the business-type activities, the aggregate discretely presented component units, each major fund, and the aggregate remaining fund information of City of West Wendover, Nevada as of and for the year ended June 30, 2018, and the related notes to the financial statements, which collectively comprise the City's basic financial statements as listed in the table of contents.

Management's Responsibility for the Financial Statements

Management is responsible for the preparation and fair presentation of these financial statements in accordance with accounting principles generally accepted in the United States of America; this includes the design, implementation, and maintenance of internal control relevant to the preparation and fair presentation of financial statements that are free from material misstatement, whether due to fraud or error.

Auditor's Responsibility

Our responsibility is to express opinions on these financial statements based on our audit. We conducted our audit in accordance with auditing standards generally accepted in the United States of America and the standards applicable to financial audits contained in *Government Auditing Standards*, issued by the Comptroller General of the United States. Those standards require that we plan and perform the audit to obtain reasonable assurance about whether the financial statements are free from material misstatement.

An audit involves performing procedures to obtain audit evidence about the amounts and disclosures in the financial statements. The procedures selected depend on the auditor's judgment, including the assessment of the risks of material misstatement of the financial statements, whether due to fraud or error. In making those risk assessments, the auditor considers internal control relevant to the entity's preparation and fair presentation of the financial statements in order to design audit procedures that are appropriate in the circumstances, but not for the purpose of expressing an opinion on the effectiveness of the entity's internal control. Accordingly, we express no such opinion. An audit also includes evaluating the appropriateness of accounting policies used and the reasonableness of significant accounting estimates made by management, as well as evaluating the overall presentation of the financial statements.

We believe that the audit evidence we have obtained is sufficient and appropriate to provide a basis for our audit opinions.

Opinions

In our opinion, the financial statements referred to above present fairly, in all material respects, the respective financial position of the governmental activities, the business-type activities, the aggregate discretely presented component units, each major fund, and the aggregate remaining fund information of the City of West Wendover, Nevada, as of June 30, 2018, and the respective changes in financial position, and, where applicable, cash flows thereof for the year then ended in accordance with accounting principles generally accepted in the United States of America.

Emphasis of Matter

The City implemented the provisions of GASB Statement No. 82, *Pension Issues- an Amendment of GASB Statements No. 67, No. 68, and No. 73*. Our opinion is not modified with respect to this matter. The fiscal year 2017 financial statements do not reflect the effects of this statement as the required information was not available for that time period.

Other Matters

Required Supplementary Information

Accounting principles generally accepted in the United States of America require that the management's discussion and analysis, budgetary comparison information, the schedule of proportionate share of the net pension liability and the schedule of contributions, as listed in the table of contents, be presented to supplement the basic financial statements. Such information, although not a part of the basic financial statements, is required by the Governmental Accounting Standards Board, who considers it to be an essential part of financial reporting for placing the basic financial statements in an appropriate operational, economic, or historical context. We have applied certain limited procedures to the required supplementary information in accordance with auditing standards generally accepted in the United States of America, which consisted of inquiries of management about the methods of preparing the information and comparing the information for consistency with management's responses to our inquiries, the basic financial statements, and other knowledge we obtained during our audit of the basic financial statements. We do not express an opinion or provide any assurance on the information because the limited procedures do not provide us with sufficient evidence to express an opinion or provide any assurance.

Other Information

Our audit was conducted for the purpose of forming opinions on the financial statements that collectively comprise the City of West Wendover, Nevada's basic financial statements. The major fund budgetary comparison schedules, the combining and individual non-major fund budgetary schedules and component unit supplementary schedules, as listed in the table of contents, are presented for purposes of additional analysis and are not a required part of the basic financial statements.

The major fund budgetary comparison schedules, the combining and individual non-major fund budgetary schedules, and the component unit supplementary schedules as listed in the table of contents, are the responsibility of management and were derived from and relate directly to the underlying accounting and other records used to prepare the basic financial statements. Such information has been subjected to the auditing procedures applied in the audit of the basic financial statements and certain additional procedures, including comparing and reconciling such information directly to the underlying accounting and other records used to prepare the basic financial statements or to the basic financial statements themselves, and other additional procedures in accordance with auditing standards generally accepted in the United States of America. In our opinion, the major fund budgetary comparison schedules, the combining and individual non-major fund budgetary schedules, and the component unit supplementary schedules as listed in the table of contents, are fairly stated in all material respects in relation to the basic financial statements as a whole.

Other Reporting Required by *Government Auditing Standards*

In accordance with *Government Auditing Standards*, we have also issued our report dated September 21, 2018, on our consideration of the City of West Wendover, Nevada's internal control over financial reporting and on our tests of its compliance with certain provisions of laws, regulations, contracts, and grant agreements and other matters. The purpose of that report is to describe the scope of our testing of internal control over financial reporting and compliance and the results of that testing, and not to provide an opinion on internal control over financial reporting or on compliance. That report is an integral part of an audit performed in accordance with *Government Auditing Standards* in considering City of West Wendover, Nevada's internal control over financial reporting and compliance.



HintonBurdick, PLLC
St. George, Utah
September 21, 2018

This page intentionally left blank

CITY OF WEST WENDOVER, NEVADA
MANAGEMENT'S DISCUSSION AND ANALYSIS

As management of the City of West Wendover (City), we offer readers of the City's financial statements this narrative overview and analysis of the financial activities of the City for the fiscal year ended June 30, 2018. Please read it in conjunction with the accompanying basic financial statements.

FINANCIAL HIGHLIGHTS

- Total assets exceed total liabilities (net position) by $26.1 million at the close of the fiscal year.
- Total net position decreased by $1.3 million from the prior year.
- Governmental activities net position decreased by $1 million. Business-type net position decreased by $187,508.
- Total revenues from all governmental sources were $9.2 million and the total cost of all City programs were $9.7 million
- The General Fund revenues exceeded expenditures, excluding transfers, and debt proceeds by $809,727.
- At the end of the current fiscal year, unassigned fund balance for the General Fund was $971,953, or 17% of total General Fund expenditures, excluding transfers.

USING THIS ANNUAL REPORT

This annual report consists of a series of financial statements. The three components of the financial statements are: (1) Government-wide financial statements which include the Statement of Net Position and the Statement of Activities. These statements provide information about the activities of the City as a whole. (2) Fund financial statements tell how these services were financed in the short term as well as what remains for future spending. Fund financial statements also report the City's operations in more detail than the government-wide statements by providing information about the City's most significant funds. (3) Notes to the financial statements.

Reporting the City as a Whole

The Statement of Net Position and the Statement of Activities (Government-wide)

A frequently asked question regarding the City's financial health is whether the year's activities contributed positively to the overall financial well-being. The Statement of Net Position and the Statement of Activities report information about the City as a whole and about its activities in a way that helps answer this question. These statements include *all* assets and liabilities using the *accrual basis of accounting*, which is similar to the accounting used by most private-sector companies. All of the current year's revenues and expenses are taken into account regardless of when cash is received or paid.

These two statements report the City's net position and changes in them. Net position, the difference between assets and liabilities, are one way to measure the City's financial health, or financial position. Over time, increases or decreases in net position are an indicator of whether the financial health is improving or deteriorating. However, it is important to consider other non-financial factors such as changes in the City's property tax base or condition of the City's roads to accurately assess the overall health of the City.

The Statement of Net Position and the Statement of Activities, present information about the following:

- Government activities – All of the City's basic services are considered to be governmental activities, including general government, judicial, public safety, community development, health and sanitation, culture and recreation, community support, and interest on long-term debt. Consolidated tax, room tax, ad valorem tax, county gaming tax, franchise tax, right of way tolls, motor vehicle tax, and unrestricted investment earnings finance these activities.

- Proprietary activities/Business type activities – The City charges a fee to customers to cover all or most of the cost of the services provided. The City's water, sewer, and garbage / compost systems are reported in this category.

Reporting the City's Most Significant Funds

Fund Financial Statements

The fund financial statements provide detailed information about the most significant funds—not the City as a whole. Some funds are required to be established by State law and others are established by City resolution or by bond covenants. However, management establishes many other funds which aid in the management of money for particular purposes or meet legal responsibilities associated with the usage of certain taxes, grants, and other money. The City's two kinds of funds, *governmental* and *proprietary*, use different accounting approaches as explained below.

- *Governmental funds* – Most of the City's basic services are reported in governmental funds. Governmental funds focus on how resources flow in and out with the balances remaining at year-end that are available for spending. These funds are reported using an accounting method called the *modified accrual* accounting method, which measures cash and all other *financial* assets that can readily be converted to cash. The governmental fund statements provide a detailed *short-term view* of the City's general government operations and the basic services it provides. Government fund information shows whether there are more or fewer financial resources that can be spent in the near future to finance the City's programs. We describe the relationship (or differences) between governmental *activities* (reported in the Statement of Net Position and the Statement of Activities) and governmental *funds* in a reconciliation included with the Basic Financial Statements.

- *Proprietary funds* – The City maintains enterprise and internal service funds under this category. Enterprise funds are used to account for functions presented in the business-type section of the government-wide financial statements. Internal service funds are used to account for the financing of goods or services provided by one department or agency to other departments or agencies of the government.

Notes to the Financial Statements

Notes to the financial statements are included to provide information that is crucial to the full and complete understanding of the data provided in the financial statements.

GOVERNMENT-WIDE FINANCIAL ANALYSIS

Net position may serve over time as a useful indicator of the City's financial position. The City's combined assets exceed liabilities by $26.1 million as of June 30, 2018 as shown in the following condensed statement of net position. The City has chosen to account for its water, sewer, and garbage/compost operations in enterprise funds which are shown as Business Activities.

City of West Wendover, Nevada
Statement of Net Position

	Governmental activities		Business-type activities		Combined Total	
Assets	06/30/18	06/30/17	06/30/18	06/30/17	06/30/18	06/30/17
Current and other assets	$ 2,238,108	$ 2,021,161	$ 5,789,930	$ 5,685,052	$ 8,028,038	$ 7,706,213
Net capital assets	21,295,126	22,724,786	19,288,460	19,997,534	40,583,586	42,722,320
Total assets	23,533,234	24,745,947	25,078,390	25,682,586	48,611,624	50,428,533
Deferred outflows	1,242,559	2,045,323	244,359	384,951	1,486,918	2,430,274
Liabilities						
Current liabilities	562,992	565,461	149,129	174,331	712,121	739,792
Long-term liabilities outstanding	13,421,798	14,358,957	8,872,437	9,414,813	22,294,235	23,773,770
Total liabilities	13,984,790	14,924,418	9,021,566	9,589,144	23,006,356	24,513,562
Deferred inflows	794,117	775,055	156,171	145,873	950,288	920,928
Net position:						
Net investment in capital assets	14,929,697	15,708,329	14,106,662	14,266,471	29,036,359	29,974,800
Restricted	207,131	205,587	964,944	878,379	1,172,075	1,083,966
Unrestricted	(5,139,942)	(4,822,119)	1,073,406	1,187,670	(4,066,536)	(3,634,449)
Total net position	$ 9,996,886	$ 11,091,797	$ 16,145,012	$ 16,332,520	$ 26,141,898	$ 27,424,317

Governmental Activities

The cost of all Governmental activities this year was $9,234,284. As shown on the statement of Changes in Net Position on the following page, $624,342 of this cost was paid for by those who directly benefited from the programs; $530,132 was subsidized by grants received from other governmental organizations for both capital and operating activities. Overall governmental program revenues, including intergovernmental aid and fees for services were $1,154,474. General taxes, asset sales, and other general revenues totaled $8,079,810.

The City's programs include: general government, judicial, public safety, public works, community development, health and sanitation, culture and recreation, community support, and interest on long-term debt. Each programs' total cost is presented below.

City of West Wendover, Nevada
Changes in Net Position

	Governmental activities		Business-type activities		Combined Total	
	06/30/18	06/30/17	06/30/18	06/30/17	06/30/18	06/30/17
Revenues:						
Program revenues:						
Charges for services	$ 624,342	$ 673,238	$ 3,765,125	$ 3,621,350	$ 4,389,467	$ 4,294,588
Operating grants	337,594	325,958	-	-	337,594	325,958
Capital grants	192,538	3,603,861	27,721	23,350	220,259	3,627,211
General revenues:						
Consolidated taxes	2,760,581	2,576,081	-	-	2,760,581	2,576,081
Room taxes	2,389,961	2,377,383	-	-	2,389,961	2,377,383
Ad valorem taxes	1,629,060	1,495,024	-	-	1,629,060	1,495,024
County gaming taxes	457,909	431,418	-	-	457,909	431,418
Franchise taxes	397,894	376,520	-	-	397,894	376,520
Right of way toll	290,142	281,227	-	-	290,142	281,227
Motor vehicle taxes	111,452	112,291	-	-	111,452	112,291
Other taxes	5,485	-	-	-	5,485	-
Investment earnings	7,317	6,837	124,294	120,403	131,611	127,240
Gain on sale of capital assets	-	-	-	-	-	-
Miscellaneous revenues	30,009	17,024	32,811	32,005	62,820	49,029
Total revenues	9,234,284	12,276,862	3,949,951	3,797,108	13,184,235	16,073,970
Expenses:						
General government	1,957,253	1,444,873	-	-	1,957,253	1,444,873
Judicial	339,053	323,764	-	-	339,053	323,764
Public safety	3,327,123	3,370,826	-	-	3,327,123	3,370,826
Public works	527,048	618,991	-	-	527,048	618,991
Community development	417,780	281,337	-	-	417,780	281,337
Health and sanitation	140,732	148,599	-	-	140,732	148,599
Culture and recreation	2,504,678	2,441,894	-	-	2,504,678	2,441,894
Community support	280,647	264,366	-	-	280,647	264,366
Interest on long term debt	248,774	287,050	-	-	248,774	287,050
Water	-	-	1,380,771	1,390,789	1,380,771	1,390,789
Sewer	-	-	1,592,175	1,609,624	1,592,175	1,609,624
Garbage/Compost	-	-	1,054,200	1,109,909	1,054,200	1,109,909
Total expenses	9,743,088	9,181,700	4,027,146	4,110,322	13,770,234	13,292,022
Increase in net position before transfers	(508,804)	3,095,162	(77,195)	(313,214)	(585,999)	2,781,948
Transfers	-	-	-	-	-	-
Increase in net position	(508,804)	3,095,162	(77,195)	(313,214)	(585,999)	2,781,948
Net position, beginning	11,091,797	7,985,635	16,332,520	16,656,734	27,424,317	24,642,369
Restatement adjustment	(586,107)	11,000	(110,313)	(11,000)	(696,420)	-
Net position, ending	$ 9,996,886	$ 11,091,797	$ 16,145,012	$ 16,332,520	$ 26,141,898	$ 27,424,317

Total resources available during the year to finance governmental operations were $19,739,974 consisting of Net Position at July 1, 2017 of $10.5 million as restated, program revenues of $1.1 million and General Revenue of $8.1 million. Total Governmental Activities during the year were $9.7 million; thus, Governmental Net Position decreased by $508,804 to $10 million.

The following graphs compare program expenses to program revenues and provide a breakdown of revenues by source for all government activities. The charts below are derived from the Statement of Activities on page 15.

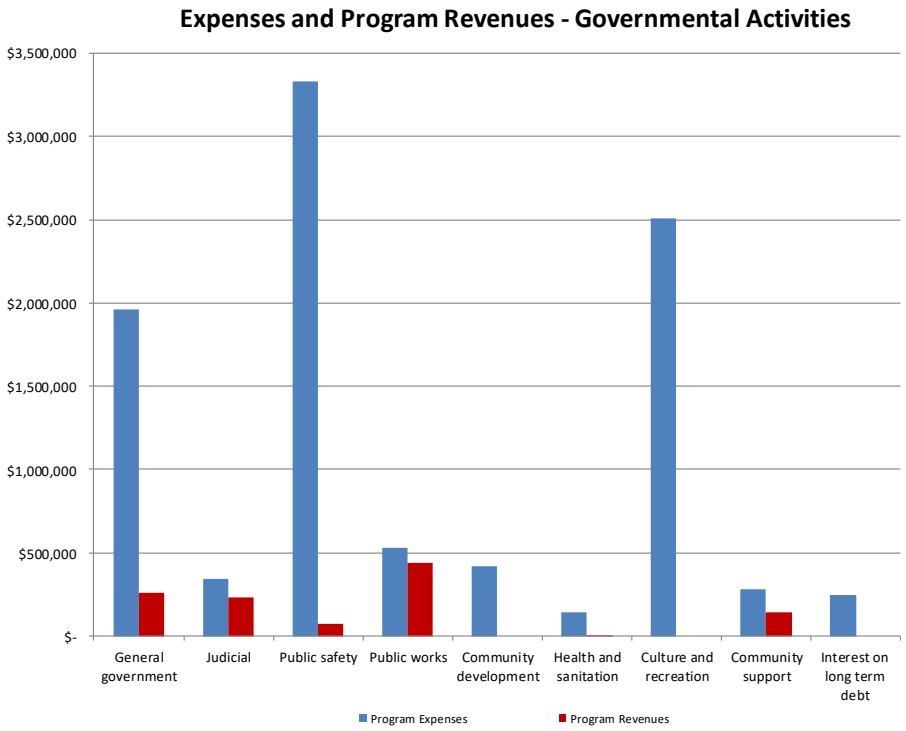

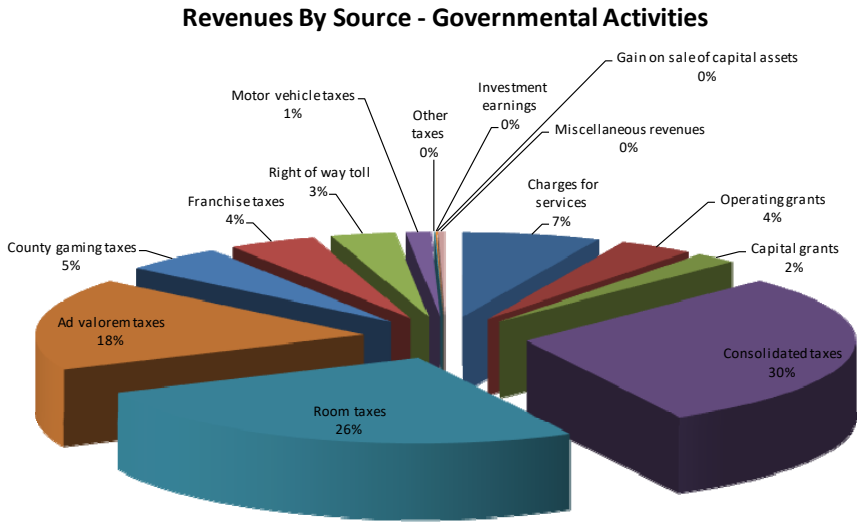

Business Type Activities

Net position of the Business Type activities at June 30, 2018, as reflected in the Statement of Net Position was $16.1 million. The cost of providing all Proprietary (Business Type) activities this year was $4.0 million. As shown in the Statement of Activities, the amounts paid by users of the system were $3.7 million and $27,721 was subsidized by capital grants and contributions. Unrestricted investment earnings totaled 124,294; other revenue totaled $32,811, thus, net position decreased by $77,195.

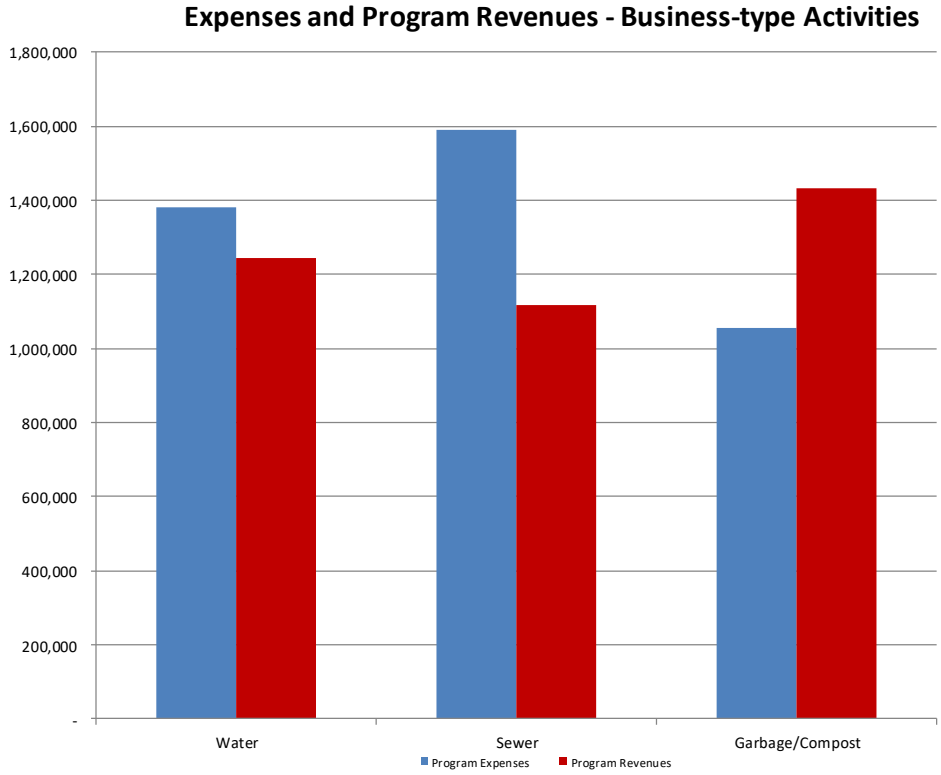

Financial Analysis of the Government's Funds

As noted earlier, the City of West Wendover uses fund accounting to ensure and demonstrate compliance with finance-related legal requirements.

Governmental funds: The focus of the City of West Wendover's governmental funds is to provide information on near-term inflows, outflows, and balances of spendable resources. Such information is useful in assessing the City of West Wendover's financing requirements. In particular, unassigned fund balance may serve as a useful measure of a government's net resources available for spending at the end of the fiscal year.

As of the end of the current fiscal year, the City of West Wendover's governmental funds reported combined ending fund balances of $1,618,944, an increase of $170,767 in comparison with the prior year. 60% of the total fund balance or $971,361 constitutes unassigned fund balance, which is available for new spending at the government's discretion. The remainder of the fund balance is non-spendable, restricted, or committed because it has already been committed 1) to pay debt service, 2) to pay for capital improvements or 3) for a variety of other restricted or committed purposes.

The general fund is the chief operating fund of the City of West Wendover. At the end of the current fiscal year, unassigned fund balance in the general fund was $971,953, and total fund balance is $1,054,510. As a measure of liquidity, it may be useful to compare both unassigned fund balance and total fund balance to total fund expenditures. Total unassigned fund balance represents 17% of total general fund expenditures. During the year, the City of West Wendover's general fund balance was budgeted to decrease by $268,100.

The recreation fund has a fund balance of $157,617, all of which is restricted for culture and recreation appropriation.

Proprietary funds: The City of West Wendover's proprietary funds provide the same type of information found in the government-wide financial statements, but in more detail. Total net position of the proprietary funds was $16,145,012 at year end.

General Fund Budgetary Highlights

Actual expenditures for the General Fund at year-end were $315,517 less than the final budget. The favorable budget to actual variance in appropriations was principally due to overall savings in services and supplies for all departments. Actual revenues were more than the final budget by $87,785.

CAPITAL ASSET AND DEBT ADMINISTRATION

Capital Assets

The capital assets of the City are those assets that are used in performance of City functions including infrastructure assets. Capital Assets include equipment, buildings, land, park facilities and roads. At the end of fiscal year 2018, net capital assets of the government activities totaled $21.2 million and the net capital assets of the business-type activities totaled $19.2 million. Depreciation on governmental-type capital assets is recognized in the Government-Wide financial statements. (See note 6 to the financial statements.)

Long Term Liabilities

At year-end, the City had $13.4 million in governmental type long term liabilities, and $8.8 million in proprietary long term liabilities. The liabilities amounts to $4,956 per capita (4,498 – 2013 population US Census Bureau Website 2013). The City's net decrease in total long term liabilities was $1.4 million. (See note 7 and 18 to the financial statements for detailed descriptions.)

NEXT YEAR'S BUDGET AND ECONOMIC FACTORS

In considering the City Budget for fiscal year 2018-2019, the City Council and management remained cautious as to the growth of revenues and expenditures. The current labor contract with the Police Officer Association effective July 1, 2018 thru June 30, 2021 provides for no pay adjustment for fiscal 2019 but does provide some adjustments for fiscal 2020 and 2021. The current labor contract with Local 4041 effective July 1, 2018 thru June 30, 2019 does not include any pay adjustment.

Projects that are a part of the City Budget for the fiscal year 2018-2019 are as follows:

- The City will continue with some Street Rehab and Storm Drainage Improvement Projects related to the recent funding.
- On the immediate horizon is development for the City Center/Downtown development. The City started a planning phase in fiscal year 2018 and is working with BLM to acquire the land for that development. Infrastructure for the development will start as soon as funding is in place.
- In connection with the acquisition of the BLM land surrounding the City Hall, a new fire station will be built. Grants and a SDA loan have been approved for the development.

CONTACTING THE CITY'S FINANCIAL MANAGEMENT

This financial report is designed to provide our citizens, taxpayers, customers, investors and creditors with a general overview of the City's finances and to show the City's accountability for the money it receives. If you have questions about this report or need additional financial information, please contact the City's Chief Financial Officer at the City of West Wendover, 1111 N. Gene L. Jones Way, West Wendover, Nevada 89883 or visit us online at http://www.westwendovercity.com

BASIC FINANCIAL STATEMENTS

CITY OF WEST WENDOVER, NEVADA
Statement of Net Position
For the Year Ended June 30, 2018

	Primary Government			Component Unit
	Governmental Activities	Business-type Activities	Total	Johnson Springs
Assets				
Cash and temporary investments	$ 859,268	$ 2,020,827	$ 2,880,095	$ 115,024
Accounts receivable, net	950,544	389,597	1,340,141	57,634
Due from component unit	-	2,337,645	2,337,645	-
Inventory	27,569	65,667	93,236	13,389
Prepaid items	123,362	11,250	134,612	-
Restricted cash	277,365	964,944	1,242,309	-
Capital assets not being depreciated:				
Land	1,637,283	111,000	1,748,283	18,000
Capital assets, net of accumulated depreciation:				
Buildings, net	8,226,144	3,539,847	11,765,991	2,662,725
Improvements other than buildings, net	10,956,251	2,778,608	13,734,859	272,024
Machinery and equipment, net	475,448	847,051	1,322,499	130,532
Utility systems	-	12,011,954	12,011,954	3,548,316
Total assets	23,533,234	25,078,390	48,611,624	6,817,644
Deferred Outflows of Resources				
Deferred outflows related to pensions	1,242,559	244,359	1,486,918	34,296
Liabilities				
Accounts payable	324,481	23,937	348,418	29,600
Accrued interest payable	31,432	120,404	151,836	-
Accrued expenses	158,573	-	158,573	1,687
Due to primary government	-	-	-	2,337,645
Unearned revenue	48,506	-	48,506	-
Deposits payable	-	4,788	4,788	-
Noncurrent liabilities				
Due within one year	758,408	826,691	1,585,099	9,461
Due in more than one year	5,894,975	6,714,674	12,609,649	-
Net pension liability	6,768,415	1,331,072	8,099,487	186,819
Total liabilities	13,984,790	9,021,566	23,006,356	2,565,212
Deferred Inflows of Resources				
Deferred inflows related to pensions	794,117	156,171	950,288	21,919
Net Position				
Net investment in capital assets	14,929,697	14,106,662	29,036,359	4,293,952
Restricted for:				
Judicial	49,514	-	49,514	-
Culture and recreation	157,617	-	157,617	-
Debt service	-	964,944	964,944	-
Unrestricted	(5,139,942)	1,073,406	(4,066,536)	(29,143)
Total net position	$ 9,996,886	$ 16,145,012	$ 26,141,898	$ 4,264,809

The accompanying notes are an integral part of the financial statements.

CITY OF WEST WENDOVER, NEVADA
Statement of Activities
For the Year Ended June 30, 2018

Functions/Programs	Expenses	Program Revenues: Charges for Services	Program Revenues: Operating Grants & Contributions	Program Revenues: Capital Grants & Contributions	Net (Expense) Revenue and Changes in Net Position: Governmental Activities	Net (Expense) Revenue and Changes in Net Position: Business-Type Activities	Net (Expense) Revenue and Changes in Net Position: Total	Component Unit: Johnson Springs
Governmental:								
General government	$ 1,957,253	$ 256,546	$ -	$ -	$ (1,700,707)	$ -	$ (1,700,707)	$ -
Judicial	339,053	233,086	-	-	(105,967)	-	(105,967)	-
Public safety	3,327,123	33,200	42,490	469	(3,250,964)	-	(3,250,964)	-
Public works	527,048	93,321	155,000	191,679	(87,048)	-	(87,048)	-
Community development	417,780	-	-	-	(417,780)	-	(417,780)	-
Health and sanitation	140,732	3,387	-	-	(137,345)	-	(137,345)	-
Culture and recreation	2,504,678	-	-	-	(2,504,678)	-	(2,504,678)	-
Community support	280,647	4,802	140,104	390	(135,351)	-	(135,351)	-
Interest on long term debt	248,774	-	-	-	(248,774)	-	(248,774)	-
Total governmental activities	9,743,088	624,342	337,594	192,538	(8,588,614)	-	(8,588,614)	-
Business-type:								
Water	1,380,771	1,225,277	-	17,576	-	(137,918)	(137,918)	-
Sewer	1,592,175	1,107,240	-	10,145	-	(474,790)	(474,790)	-
Garbage/Compost	1,054,200	1,432,608	-	-	-	378,408	378,408	-
Total business-type activities	4,027,146	3,765,125	-	27,721	-	(234,300)	(234,300)	-
Total primary government	$ 13,770,234	$ 4,389,467	$ 337,594	$ 220,259				
Component Unit:								
Johnson Springs	$ 1,002,054	$ 652,108	$ -	$ -				(349,946)
General Revenues:								
Consolidated taxes					2,760,581	-	2,760,581	-
Room taxes					2,389,961	-	2,389,961	-
Ad valorem taxes					1,629,060	-	1,629,060	-
County gaming taxes					457,909	-	457,909	-
Franchise taxes					397,894	-	397,894	-
Right of way toll					290,142	-	290,142	-
Motor vehicle taxes					111,452	-	111,452	-
Other taxes					5,485	-	5,485	-
Investment earnings					7,317	124,294	131,611	19,001
Miscellaneous revenues					30,009	32,811	62,820	-
Total general revenues and transfers					8,079,810	157,105	8,174,095	19,001
Change in net position					(508,804)	(77,195)	(585,999)	(330,945)
Net position - beginning					11,091,797	16,332,520	27,424,317	4,609,596
Restatement adjustment					(586,107)	(110,313)	(696,420)	(13,842)
Net position - ending					$ 9,996,886	$ 16,145,012	$ 26,141,898	$ 4,264,809

The accompanying notes are an integral part of the financial statements.

CITY OF WEST WENDOVER, NEVADA
Balance Sheet
Governmental Funds
June 30, 2018

	General Fund	Recreation Fund	Nonmajor Governmental Funds	Total Governmental Funds
Assets				
Cash and temporary investments	$ 390,184	$ 146,951	$ 135,145	$ 672,280
Accounts receivable, net	96,510	230,586	-	327,096
Due from other funds	160,000	-	-	160,000
Due from other governments	599,107	-	15,773	614,880
Inventory	26,072	-	1,497	27,569
Prepaid and other items	56,045	-	-	56,045
Restricted cash	440	-	276,925	277,365
Total assets	1,328,358	377,537	$ 429,340	$ 2,135,235
Liabilities				
Accounts payable	$ 66,769	$ 219,920	$ 22,523	$ 309,212
Accrued liabilities	158,573	-	-	158,573
Unearned revenue	48,506	-	-	48,506
Total liabilities	273,848	219,920	22,523	516,291
Fund Balances				
Nonspendable	82,117	-	1,497	83,614
Restricted	440	157,617	403,787	561,844
Committed	-	-	2,125	2,125
Unassigned	971,953	-	(592)	971,361
Total fund balances	1,054,510	157,617	406,817	1,618,944
Total liabilities and fund balances	$ 1,328,358	$ 377,537	$ 429,340	$ 2,135,235

The accompanying notes are an integral part of the financial statements.

CITY OF WEST WENDOVER, NEVADA
Reconciliation of the Balance Sheets of Governmental Funds
To the Statement of Net Position
For the Year Ended June 30, 2018

Total fund balances - governmental funds		$ 1,618,944
Amounts reported for governmental activities in the statement of net position are different because:		
Capital assets used in governmental activities are not financial resources and therefore are not reported in the funds.		
Governmental capital assets	$ 30,854,071	
Accumulated depreciation	(9,558,945)	
		21,295,126
Long-term receivables in the governmental activities are not reported in the funds.		8,568
Long-term liabilities are not due and payable in the current period and therefore are not reported in the funds.		
Net pension liabilities	$ (6,768,415)	
Bonds payable	(6,365,429)	
Compensated absences	(287,954)	
Interest payable	(31,432)	
		(13,453,230)
The internal service fund is used by management to charge the cost of insurance to individual funds. The assets and liabilities of the internal service funds are included in the governmental activities in the statement of net position.		79,036
Deferred outflows and inflows of resources related to pensions are applicable to future reporting periods and, therefore, are not reported in the funds.		
Deferred outflows	$ 1,242,559	
Deferred inflows	(794,117)	
		448,442
Total net position - governmental activities		$ 9,996,886

The accompanying notes are an integral part of the financial statements.

CITY OF WEST WENDOVER, NEVADA
Statement of Revenues, Expenditures and Changes in Fund Balances
Governmental Funds
For the Year Ended June 30, 2018

	General Fund	Recreation Fund	Nonmajor Governmental Funds	Total Governmental Funds
Revenues				
Taxes	$ 1,503,680	$ 2,389,961	$ 50,279	$ 3,943,920
Licenses and permits	1,012,930	-	-	1,012,930
Intergovernmental	3,785,566	-	131,300	3,916,866
Charges for services	50,732	-	9,794	60,526
Fines and forfeits	82,892	-	-	82,892
Miscellaneous revenues	187,085	-	242,377	429,462
Total revenues	6,622,885	2,389,961	433,750	9,446,596
Expenditures				
Current				
General government	1,212,339	-	-	1,212,339
Judicial	333,142	-	4,151	337,293
Public safety	3,214,162	-	-	3,214,162
Public works	525,019	-	-	525,019
Community development	261,910	-	-	261,910
Health	119,217	-	-	119,217
Culture and recreation	13,116	2,394,512	-	2,407,628
Community support	15,015	-	265,238	280,253
Capital outlay	-	-	6,550	6,550
Debt service	119,238	-	792,220	911,458
Total expenditures	5,813,158	2,394,512	1,068,159	9,275,829
Excess (deficiency) of revenues over (under) expenditures	809,727	(4,551)	(634,409)	170,767
Other Financing Sources (Uses)				
Transfers in	-	-	737,100	737,100
Transfers out	(682,100)	-	(55,000)	(737,100)
Total other financing sources and uses	(682,100)	-	682,100	-
Net change in fund balances	127,627	(4,551)	47,691	170,767
Fund balances, beginning of year	926,883	162,168	359,126	1,448,177
Fund balances, end of year	$ 1,054,510	$ 157,617	$ 406,817	$ 1,618,944

The accompanying notes are an integral part of the financial statements.

CITY OF WEST WENDOVER, NEVADA
Reconciliation of the Statement of Revenues,
Expenditures, and Changes in Fund Balances of Governmental Funds
To the Statement of Activities
For the Year Ended June 30, 2018

Amounts reported for governmental activities in the statement of activities are different because:		
Net change in fund balances - total governmental funds		$ 170,767
Governmental funds report capital outlays as expenditures. However, in the statement of activities, the costs of those assets is allocated over their estimated useful lives and reported as depreciation expense. This is the amount by which capital outlay exceeded depreciation in the current period.		
Capital outlay	$ 39,000	
Depreciation expense	(1,049,462)	
		(1,010,462)
Governmental funds report the gross proceeds from the sale of capital assets as revenue. However, in the statement of activities, the gain/(loss) on the sale of capital assets is reported net of its net book value.		(419,198)
Payments on long term receivables recorded as revenue in the governmental funds are reported as a reduction of receivables in the statement of net position.		(2,312)
Repayment of bond principal is an expenditure in the governmental funds, but the repayment reduces long-term liabilities in the statement of net position.		651,028
Accrued interest for long-term debt is not reported as an expenditure for the current period while it is recorded in the statement of activities. The adjustment reflects the change in interest payable		11,657
Pension contributions are reported as expenditures in the governmental funds when made. However, they are reported as deferred outflows of resources in the Statement of Net Position because the net pension liability is measured a year before the City's report date. Pension expense, which is the change in the net pension liability adjusted for changes in deferred outflows and inflows of resources related to pension, is reported in the Statement of Activities.		
Pension contributions	$ 473,469	
Pension expense	(415,465)	
		58,004
Compensated absences expenses reported in the statement of activities do not require the use of current financial resources and therefore are not reported as expenditures in the governmental funds. This adjustment reflects the change in compensated absences payable.		(7,594)
The internal service fund is used by management to charge the cost of insurance to the various funds. The net revenue (loss) of the internal service fund is reported with governmental activities.		39,306
Change in net position of governmental activities		$ (508,804)

The accompanying notes are an integral part of the financial statements.

CITY OF WEST WENDOVER, NEVADA
Statement of Net Position
Proprietary Funds
For the Year Ended June 30, 2018

	Water Fund	Sewer Fund	Garbage/ Compost Fund	Total Proprietary Funds	Health Insurance Internal Service Fund
Assets					
Current assets					
Cash and investments	$ 1,427,221	$ 64,164	$ 529,442	$ 2,020,827	$ 186,988
Accounts receivable, net	133,597	123,803	132,197	389,597	-
Inventory	61,405	4,262	-	65,667	-
Prepaid expenses	1,976	8,250	1,024	11,250	67,317
Total current assets	1,624,199	200,479	662,663	2,487,341	254,305
Noncurrent assets					
Restricted cash	570,653	77,198	317,093	964,944	-
Due from component unit	2,337,645	-	-	2,337,645	-
Capital assets:					
Land	111,000	-	-	111,000	-
Buildings	1,277,649	1,166,887	1,535,458	3,979,994	-
Improvements other than buildings	966,221	76,600	5,148,529	6,191,350	-
Machinery and equipment	869,063	1,379,199	2,190,753	4,439,015	-
Utility system	2,214,669	15,820,916	-	18,035,585	-
Less accumulated depreciation	(2,162,969)	(6,181,158)	(5,124,357)	(13,468,484)	-
Total noncurrent assets	6,183,931	12,339,642	4,067,476	22,591,049	-
Total assets	7,808,130	12,540,121	4,730,139	25,078,390	254,305
Deferred Outflows of Resources					
Deferred outflows related to pensions	69,533	89,047	85,779	244,359	-
Liabilities					
Current liabilities					
Accounts payable	5,064	13,824	5,049	23,937	15,269
Accrued interest payable	83,989	11,033	25,382	120,404	-
Due to primary government	-	-	-	-	160,000
Compensated absences	9,347	8,149	13,689	31,185	-
Customer deposits	4,788	-	-	4,788	-
Current portion of noncurrent liabilities	312,703	111,003	371,800	795,506	-
Total current liabilities	415,891	144,009	415,920	975,820	175,269
Noncurrent liabilities:					
Capital leases payable	-	-	169,179	169,179	-
Net pension liability	378,760	485,057	467,255	1,331,072	-
Bonds payable	3,295,536	2,721,917	528,042	6,545,495	-
Total noncurrent liabilities	3,674,296	3,206,974	1,164,476	8,045,746	-
Total liabilities	4,090,187	3,350,983	1,580,396	9,021,566	175,269
Deferred Inflows of Resources					
Deferred inflows related to pensions	44,439	56,910	54,822	156,171	-
Net Position					
Net investment in capital assets	1,995,776	9,429,524	2,681,362	14,106,662	-
Restricted for debt service	570,653	77,198	317,093	964,944	-
Unrestricted	1,176,608	(285,447)	182,245	1,073,406	79,036
Total net position	$ 3,743,037	$ 9,221,275	$ 3,180,700	$ 16,145,012	$ 79,036

The accompanying notes are an integral part of the financial statements.

CITY OF WEST WENDOVER, NEVADA
Statement of Revenues, Expenses, and Changes in Net Position
Proprietary Funds
For the Year Ended June 30, 2018

	Water Fund	Sewer Fund	Garbage/ Compost Fund	Total Proprietary Funds	Health Insurance Internal Service Fund
Operating revenues					
Charges for services	$ 1,225,277	$ 1,107,240	$ 1,432,608	$ 3,765,125	$ 1,003,234
Operating expenses					
Water purchases	518,296	-	-	518,296	-
Salaries and wages	53,383	358,093	349,029	760,505	-
Employee benefits	197,361	131,608	126,961	455,930	963,929
Services and supplies	312,598	456,498	219,145	988,241	-
Capital outlay	168	12,673	-	12,841	-
Depreciation and amortization	139,954	548,215	326,137	1,014,306	-
Total operating expenses	1,221,760	1,507,087	1,021,272	3,750,119	963,929
Operating income (loss)	3,517	(399,847)	411,336	15,006	39,305
Nonoperating revenues (expenses)					
Interest income	119,948	1,470	2,876	124,294	-
Impact fees	16,556	9,805	-	26,361	
Grant revenue	1,020	340	-	1,360	-
Miscellaneous income	13,905	706	7,616	22,227	-
Contributions from component unit for debt payments	10,584	-	-	10,584	-
Interest expense	(159,011)	(85,088)	(32,928)	(277,027)	-
Total nonoperating revenues (expenses)	3,002	(72,767)	(22,436)	(92,201)	-
Income before contributions and transfers	6,519	(472,614)	388,900	(77,195)	39,305
Change in net position	6,519	(472,614)	388,900	(77,195)	39,305
Total net position, beginning	3,769,041	9,733,237	2,830,242	16,332,520	39,731
Restatement adjustment	(32,523)	(39,348)	(38,442)	(110,313)	-
Total net position, end of year	$ 3,743,037	$ 9,221,275	$ 3,180,700	$ 16,145,012	$ 79,036

The accompanying notes are an integral part of the financial statements.

	Water Fund	Sewer Fund	Garbage/ Compost Fund	Total Proprietary Funds	Health Insurance Internal Service Fund
Cash Flows From Operating Activities:					
Cash received from customers, service fees	$ 1,220,308	$ 1,111,919	$ 1,432,636	$ 3,764,863	$ 1,003,234
Cash paid to suppliers	(837,402)	(475,553)	(235,047)	(1,548,002)	(1,017,380)
Cash paid to employees	(249,668)	(463,428)	(455,873)	(1,168,969)	-
Net cash flows from operating activities	133,238	172,938	741,716	1,047,892	(14,146)
Cash Flows From Noncapital Financing Activities:					
Net interfund receipts/(payments)	-	-	-	-	160,000
Net component unit receipts/(payments)	76,743	-	-	76,743	-
Cash received from miscellaneous sources	13,905	706	7,616	22,227	-
Net cash flows from noncapital financing activities	90,648	706	7,616	98,970	160,000
Cash Flows From Capital and Related Financing Activities:					
Impact fees	16,556	9,805	-	26,361	-
Grant revenue	1,020	340	-	1,360	-
Principal paid on capital debt	(303,294)	(107,831)	(369,460)	(780,585)	-
Interest paid on capital debt	(159,011)	(85,088)	(32,928)	(277,027)	-
Acquisition and construction of capital assets	(19,631)	(39,199)	(15,080)	(73,910)	-
Net cash flows from capital and related financing activities	(464,360)	(221,973)	(417,468)	(1,103,801)	-
Cash Flows From Investing Activities:					
Interest income	119,948	1,470	2,876	124,294	-
Net change in cash and cash equivalents	(120,526)	(46,859)	334,740	167,355	145,854
Cash and investments, including restricted cash, beginning of year as restated	2,118,400	188,221	511,795	2,818,416	41,134
Cash and Cash Equivalents, Including Restricted Cash , End of Year	$ 1,997,874	$ 141,362	$ 846,535	$ 2,985,771	$ 186,988
Reconciliation of operating income to net cash flows from operating activities:					
Operating income (loss)	$ 3,517	$ (399,847)	$ 411,336	$ 15,006	$ 39,305
Adjustments to reconcile net income (loss) to net cash from operating activities					
Depreciation/amortization	139,954	548,215	326,137	1,014,306	-
Pension expense	26,251	58,668	50,674	135,593	-
Employer pension contributions	(26,495)	(33,931)	(32,685)	(93,111)	-
Changes in operating assets and liabilities:					
(Increase) decrease in receivables	(4,589)	4,679	28	118	-
(Increase) decrease in inventory	(739)	100	-	(639)	-
(Increase) decrease in prepaid expenses	-	(3,145)	(16)	(3,161)	(21,417)
Increase (decrease) in accounts payable	(5,601)	(3,337)	(15,886)	(24,824)	(32,034)
Increase (decrease) in due from deposits	(380)	-	-	(380)	-
Increase (decrease) in compensated absences	1,320	1,536	2,128	4,984	-
Net cash flows from operating activities	$ 133,238	$ 172,938	$ 741,716	$ 1,047,892	$ (14,146)
Supplemental Schedule of Non-cash Financing and Investing Activities					
Acquisition of capital assets through debt	$ -	$ -	$ 231,697	$ 231,697	$ -

The accompanying notes are an integral part of the financial statements.

NOTE 1. Summary of Significant Accounting Policies

Description of government-wide financial statements

The government-wide financial statements (i.e., the statement of net position and the statement of activities) report information on all of the nonfiduciary activities of the primary government and its component units. All fiduciary activities are reported only in the fund financial statements. *Governmental activities*, which normally are supported by taxes, intergovernmental revenues, and other nonexchange transactions, are reported separately from *business-type activities*, which rely to a significant extent on fees and charges to external customers for support. Likewise, the *primary government* is reported separately from certain legally separate *component units* for which the primary government is financially accountable.

Reporting Entity

The City of West Wendover (government) is a municipal corporation governed by an elected mayor and five-member governing council (council). The accompanying financial statements present the government and its component units, entities for which the government is considered to be financially accountable. Blended component units are, in substance, part of the primary government's operations, even though they are legally separate entities. Thus, blended component units are appropriately presented as funds of the primary government. Each discretely presented component unit is reported in a separate column in the government-wide financial statements to emphasize that it is legally separate from the government.

Discretely presented component units - The Johnson Springs Water System Enterprise Fund (Johnson Springs) was formed by a settlement agreement between the City of West Wendover, Nevada and the City of Wendover, Utah to replace Administrative Authority upon its dissolution (dissolved on December 31, 2008). Johnson Springs has no board. The net assets of the Administrative Authority were transferred to Johnson Springs on January 1, 2009, including the debt of the Administrative Authority that is in the name of the City. It is a separate enterprise fund and is considered a component unit due to the City's responsibility to perform all management, maintenance and accounting duties for the fund.

Basis of presentation – government-wide financial statements

While separate government-wide and fund financial statements are presented, they are interrelated. The governmental activities column incorporates data from governmental funds and internal service funds, while business-type activities incorporate data from the government's enterprise funds. Separate financial statements are provided for governmental funds, proprietary funds, and fiduciary funds, even though the latter are excluded from the government-wide financial statements.

As discussed earlier, the city has one discretely presented component units, Johnson Springs, which is considered a major component unit and is shown in separate columns in the government-wide financial statements.

As a general rule, the effect of interfund activity has been eliminated from the government-wide financial statements.

NOTE 1. Summary of Significant Accounting Policies, Continued

Basis of presentation – fund financial statements

The fund financial statements provide information about the government's funds, including its fiduciary funds and blended component units if any. Separate statements for each fund category—governmental, proprietary, and fiduciary—are presented. The emphasis of fund financial statements is on major governmental and enterprise funds, each displayed in a separate column. All remaining governmental and enterprise funds are aggregated and reported as nonmajor funds. Major individual governmental and enterprise funds are reported as separate columns in the fund financial statements.

The government reports the following major governmental funds:

The **General Fund** is the government's primary operating fund. It accounts for all financial resources of the general government, except those accounted for in another fund.

The **Recreation Fund** is used to account for the City's share of room tax proceeds and the distribution of those funds to the recreation district.

The government reports the following major enterprise funds:

The **Water Fund** accounts for the provision of water services to the residents of the City. All activities necessary to provide such services are accounted for in this fund, including, but not limited to, administration, operation, maintenance, financing and related debt service and billing and collection.

The **Sewer Fund** accounts for the provision of sewer services to the residents of the City. All activities necessary to provide such services are accounted for in this fund, including, but not limited to, administration, operation, maintenance, financing and related debt service and billing and collection.

The **Garbage/Compost Fund** is used to account for the provision of sanitation services to residents of the City. All activities necessary to provide such services are accounted for in this fund, including, but not limited to, administration, operation, maintenance, financing and related debt service and billing and collection.

Additionally, the City reports the following fund types:

Health Insurance Internal Service Fund – Internal Service Funds are used to account for the financing of goods and services provided by one department or agency to other departments or agencies of the government and to other government units, on a cost reimbursement basis.

NOTE 1. Summary of Significant Accounting Policies, Continued

During the course of operations the government has activity between funds for various purposes. Any residual balances outstanding at year end are reported as due from/to other funds and advances to/from other funds. While these balances are reported in fund financial statements, certain eliminations are made in the preparation of the government-wide financial statements. Balances between the funds included in governmental activities (i.e., the governmental funds) are eliminated so that only the net amount is included as internal balances in the governmental activities column. Similarly, balances between the funds included in business-type activities (i.e., the enterprise funds) are eliminated so that only the net amount is included as internal balances in the business-type activities column.

Further, certain activity occurs during the year involving transfers of resources between funds. In fund financial statements these amounts are reported at gross amounts as transfers in/out. While reported in fund financial statements, certain eliminations are made in the preparation of the government-wide financial statements. Transfers between the funds included in governmental activities are eliminated so that only the net amount is included as transfers in the governmental activities column. Similarly, balances between the funds included in business-type activities are eliminated so that only the net amount is included as internal balances in the business-type activities column.

Measurement focus and basis of accounting

The accounting and financial reporting treatment is determined by the applicable measurement focus and basis of accounting. Measurement focus indicates the type of resources being measured such *as current financial resources* or *economic resources*. The basis of accounting indicates the timing of transactions or events for recognition in the financial statements.

The government-wide financial statements are reported using the *economic resources measurement* focus and the *accrual basis of accounting*. Revenues are recorded when earned and expenses are recorded when a liability is incurred, regardless of the timing of related cash flows. Property taxes are recognized as revenues in the year for which they are levied. Grants and similar items are recognized as revenue as soon as all eligibility requirements imposed by the provider have been met.

The governmental fund financial statements are reported using the *current financial resources measurement* focus and the *modified accrual basis of accounting*. Revenues are recognized as soon as they are both measurable and available. Revenues are considered to be available when they are collectible within the current period or soon enough thereafter to pay liabilities of the current period. For this purpose, the government considers revenues to be available if they are collected within 60 days of the end of the current fiscal period. Expenditures generally are recorded when a liability is incurred, as under accrual accounting. However, debt service expenditures, as well as expenditures related to compensated absences, and claims and judgments, are recorded only when payment is due. General capital asset acquisitions are reported as expenditures in governmental funds. Issuance of long-term debt and acquisitions under capital leases are reported as other financing sources.

NOTE 1. Summary of Significant Accounting Policies, Continued

Property taxes, franchise taxes, licenses, and interest associated with the current fiscal period are all considered to be susceptible to accrual and so have been recognized as revenues of the current fiscal period. Entitlements are recorded as revenues when all eligibility requirements are met, including any time requirements, and the amount is received during the period or within the availability period for this revenue source (within 60 days of yearend). Expenditure-driven grants are recognized as revenue when the qualifying expenditures have been incurred and all other eligibility requirements have been met, and the amount is received during the period or within the availability period for this revenue source (within 60 days of yearend). All other revenue items are considered to be measurable and available only when cash is received by the government.

The proprietary funds are reported using the *economic resources measurement* focus and the *accrual basis of accounting*.

Assets, liabilities, deferred outflows/inflows of resources, and net position/fund balance

Cash and cash equivalents

The government's cash and cash equivalents are considered to be cash on hand, demand deposits, and short-term investments with original maturities of three months or less from the date of acquisition.

Investments

Investments for the government are reported at fair value (generally based on quoted market prices). The City of West Wendover invests in the State of Nevada Local Government Investment Pool, which has regulatory oversight from the Board of Finance for the State of Nevada.

State statues authorize the City to invest in obligations of the U.S. Treasury; certain farm loan bonds; certain securities issued by Nevada local governments and other state and local governments; certain repurchase agreements; certain bankers acceptances; certain commercial paper; and certain negotiable certificates of deposits and money market mutual funds, as well as the State of Nevada Local Government Investment Pool.

Inventories and prepaid items

Inventories for the general and proprietary funds are valued at cost using the first-in/first-out (FIFO) method and consist of expendable office supplies, pipe, fittings and miscellaneous automobile parts. The cost of such inventories is recorded as expenditures/expenses when consumed rather than when purchased.

For all other funds, the City of West Wendover charges consumable supplies against appropriations at the time of purchase. Any inventories of such supplies at June 30 are not material to the individual funds and are not recognized in the financial statements.

NOTE 1. Summary of Significant Accounting Policies, Continued

Certain payments to vendors reflect costs applicable to future accounting periods and are recorded as prepaid items in both the government-wide and fund financial statements. The cost of prepaid items is recorded as expenditures/expenses when consumed rather than when purchased

Capital assets

Capital assets, which include property, plant, equipment, and infrastructure assets (e.g. roads, bridges, sidewalks, and similar items), are reported in the applicable governmental or business-type activities column in the government-wide financial statements. Capital assets are defined by the government as assets with an initial, individual cost of more than $5,000 and an estimated useful life in excess of two years.

The City has elected not to record infrastructure assets prior to July 1, 2003 as allowed by Governmental Accounting Statement number 34 for phase 3 governments.

As the government constructs or acquires additional capital assets each period, including infrastructure assets, they are capitalized and reported at historical cost. The reported value excludes normal maintenance and repairs which are essentially amounts spent in relation to capital assets that do not increase the capacity or efficiency of the item or increase its estimated useful life. Donated capital assets are recorded at their estimated acquisition value at the date of donation.

Interest incurred during the construction phase of capital assets of enterprise funds is included as part of the capitalized value of the assets constructed. The amount of interest capitalized depends on the specific circumstances.

Land and construction in progress are not depreciated. The other property, plant, equipment, and infrastructure of the primary government are depreciated using the straight line method over the following estimated useful lives:

Building	35 to 50 years
Improvements other than buildings	20 to 30 years
Machinery, equipment, and vehicles	3 to 10 years
Utility systems	10 to 50 years

Deferred outflows/inflows of resources

In addition to assets, the statement of financial position will sometimes report a separate section for deferred outflows of resources. This separate financial statement element, *deferred outflows of resources*, represents a consumption of net position that applies to a future period(s) and so will not be recognized as an outflow of resources (expense/ expenditure) until then. The City has one type of item that qualifies for reporting for reporting in this category which is pension related items reported on the government-wide financial statements. See footnote 17 for more information.

NOTE 1. Summary of Significant Accounting Policies, Continued

In addition to liabilities, the statement of financial position will sometimes report a separate section for deferred inflows of resources. This separate financial statement element, *deferred inflows of resources*, represents an acquisition of net position that applies to a future period(s) and so will not be recognized as an inflow of resources (revenue) until that time. The City has one type of item that qualifies for reporting in this category which is pension related items reported on the government-wide financial statements. See footnote 17 for more information. The governmental funds report unearned revenues from two sources: advance payments for business licenses and advance payments for gaming licenses. These amounts are deferred and recognized as an inflow of resources in the period that the amounts are earned.

Net position flow assumption

Sometimes the government will fund outlays for a particular purpose from both restricted (e.g., restricted bond or grant proceeds) and unrestricted resources. In order to calculate the amounts to report as restricted – net position and unrestricted – net position in the government-wide and proprietary fund financial statements, a flow assumption must be made about the order in which the resources are considered to be applied. It is the government's policy to consider restricted – net position to have been depleted before unrestricted – net position is applied.

Fund balance flow assumptions

Sometimes the government will fund outlays for a particular purpose from both restricted and unrestricted resources (the total of committed, assigned, and unassigned fund balance). In order to calculate the amounts to report as restricted, committed, assigned, and unassigned fund balance in the governmental fund financial statements a flow assumption must be made about the order in which the resources are considered to be applied. It is the government's policy to consider restricted fund balance to have been depleted before using any of the components of unrestricted fund balance. Further, when the components of unrestricted fund balance can be used for the same purpose, committed fund balance is depleted first, followed by assigned fund balance. Unassigned fund balance is applied last.

Fund balance policies

Fund balance of governmental funds is reported in various categories based on the nature of any limitations requiring the use of resources for specific purposes. The government itself can establish limitations on the use of resources through either a commitment (committed fund balance) or an assignment (assigned fund balance).

The committed fund balance classification includes amounts that can be used only for the specific purposes determined by a formal action of the government's highest level of decision-making authority. The governing council is the highest level of decision-making authority for the government that can, by adoption of an ordinance prior to the end of the fiscal year, commit fund balance. Once adopted, the limitation imposed by the ordinance remains in place until a similar action is taken (the adoption of another ordinance) to remove or revise the limitation.

NOTE 1. Summary of Significant Accounting Policies, Continued

Amounts in the assigned fund balance classification are intended to be used by the government for specific purposes but do not meet the criteria to be classified as committed. The city council (council) has by resolution authorized the Mayor, City Manager, and Chief Financial Officer to assign fund balance. The council may also assign fund balance as it does when appropriating fund balance to cover a gap between estimated revenue and appropriations in the subsequent year's appropriated budget. Unlike commitments, assignments generally only exist temporarily. In other words, an additional action does not normally have to be taken for the removal of an assignment. Conversely, as discussed above, an additional action is essential to either remove or revise a commitment.

Revenues and Expenditures/Expenses

Program revenues

Amounts reported as program revenues include 1) charges to customers or applicants who purchase, use, or directly benefit from goods, services, or privileges provided by a given function or segment and 2) grants and contributions (including special assessments) that are restricted to meeting the operational or capital requirements of a particular function or segment. All taxes, including those dedicated for specific purposes, and other internally dedicated resources are reported as general revenues rather than as program revenues.

Property taxes

All real property within the City of West Wendover is assigned a parcel number by the Elko County Assessor in accordance with state law, with each parcel being subject to physical reappraisal every five years. A factoring system is used to adjust the appraised value during the years between physical appraisals. The property and its improvements are assessed at 35% of "taxable value" as defined by statute. The amount of tax levied is developed by multiplying the assessed value by the tax rate applicable to the area in which the property is located. The maximum tax rate was established in the State Constitution at $5 per $100 of assessed valuation; however, as a result of legislative action, the tax rate was further limited to $3.64 per $100 as assessed valuation, except in cases of severe financial emergency as defined by NRS 354.705. Taxes on real property are a lien on the property and attach on July 1 of the year for which the taxes are levied.

Taxes may be paid in four installments, the first installment is due on the third Monday of August and the remaining three installments are payable on the first Monday in October, January and March to the Treasurer of Elko County in which the City of West Wendover is located. Penalties are assessed if a taxpayer fails to pay an installment within ten days of the installment due date. After a two year waiting period, if the taxes remain unpaid, a tax deed is issued conveying the property to the County with a lien for back taxes and accumulated charges. Redemption may be made by the owner or such persons as described by statute by paying all back taxes and accumulated penalties, interest and costs before sale.

Taxes on personal property are collected currently. Personal property declarations are mailed out annually by the County and the tax is computed using percentages of taxable values established by the Department of Taxation and the tax rates described above.

NOTE 1. Summary of Significant Accounting Policies, Continued

Compensated absences

Vacation and Sick-leave

The city's policy permits employees to accumulate earned but unused vacation benefits, which are eligible for payment upon separation from government service. The liability for such leave is reported as incurred in the government-wide and proprietary fund financial statements. A liability for those amounts is recorded in the governmental funds only if the liability has matured as a result of employee resignations or retirements.

Per City Policy and Collective Bargaining Agreements, employees earn (accrue) sick leave benefits which they are eligible to receive upon separation of service at a determined percentage based upon total years of service and based upon the required notice of separation.

Proprietary funds operating and non-operating revenues and expenses

Proprietary funds distinguish *operating* revenues and expenses from *non-operating* items. Operating revenues and expenses generally result from providing services and producing and delivering goods in connection with a proprietary fund's principal ongoing operations. The principal operating revenues of the water fund, sewer fund, and garbage/compost facility fund are charges to customers for sales and services. Operating expenses for enterprise funds include the cost of sales and services, administrative expenses, and depreciation on capital assets. All revenues and expenses not meeting this definition are reported as non-operating revenues and expenses.

Use of Estimates

The preparation of financial statements in conformity with accounting principles generally accepted in the United States of America requires management to make estimates and assumptions that affect the reported amounts of assets and liabilities and disclosure of contingent assets and liabilities at the date of the financial statements and the reported amounts of revenues and expenditures/expenses during the reporting period. Actual results could differ from those estimates.

Pensions

For purposes of measuring the net pension liability, deferred outflows of resources and deferred inflows of resources related to pensions, and pension expense, information about the pension plan's fiduciary net position of the Public Employees' Retirement System of Nevada (PERS) and additions to/deductions from the plan's fiduciary net position have been determined on the same basis as they are reported by PERS. For this purpose, benefit payments (including refunds of employee contributions) are recognized when due and payable in accordance with the benefit terms. Investments are reported at fair value.

NOTE 1. Summary of Significant Accounting Policies, Continued

Comparative Data

Comparative data shown for the prior year has been extracted from the 2016-2017 financial statements and reclassified where necessary. It has been provided to add comparability but is not considered full disclosure of transactions for 2016-2017. Such information can only be obtained by referring to the audited financial statements for that year.

New pronouncements

For the year ended June 30, 2018, the City implemented the provisions of GASB Statement No. 82, *Pension Issues- an Amendment of GASB Statements No. 67, No. 68, and No. 73*. GASB Statement No. 82 improves consistency in the application of pension accounting and financial reporting requirements by addressing certain issues that have been raised with respect to Statements No. 67, *Financial Reporting for Pension Plans*, No. 68, *Accounting and Financial Reporting for Pensions*, and No. 73, *Accounting and Financial Reporting for Pensions and Related Assets That Are Not within the Scope of GASB Statement 68, and Amendments to Certain Provisions of GASB Statements 67 and 68*. Implementation of this new Statement resulted in a restatement of beginning net position in the City's government-wide and proprietary fund financial statements (see Note 18).

NOTE 2. Reconciliation of Government-Wide and Fund Financial Statements

The governmental fund balance sheet includes reconciliation between total governmental fund balances and net position of governmental activities as reported in the government-wide statement of net position. This difference primarily results from the long-term economic focus of the statement of net position versus the current financial resources focus of the governmental fund balance sheets. The details of these differences are reported in the reconciliation on as listed in the table of contents.

The governmental fund statement of revenues, expenditures, and changes in fund balance includes a reconciliation between net changes in fund balances-total governmental funds and changes in net position of governmental activities as reported in the government-wide statement of activities. These differences are the result of converting from the current resources measurement focus and modified accrual basis for governmental fund statements to the economic resources measurement focus and full accrual basis used for government-wide statements. The details of these differences are reported in the reconciliation as listed in the table of contents.

NOTE 3. Stewardship, Compliance, and Accountability

Budgets and Budgetary Accounting

The City adheres to the Local Government Budget Act incorporated in Section 354 of the Nevada Revised Statutes. The provision of the Act included the following major procedures to establish the budgetary data which is reflected in these financial statements.

a. On or before April 15, the City Council files a tentative budget with the Nevada Department of Taxation for all funds.

b. Public budget hearings on the tentative budget are held on the third Tuesday of May.

c. On or before June 1, at a public hearing, the City Council indicates changes, if any, to be made to the tentative budget must then be forwarded to the Nevada Department of Taxation for the final review and approval.

d. Formal budgetary integration in the financial records of all funds is employed to enhance management control during the year.

e. Budgets for all funds are adopted on a basis consistent with generally accepted accounting principles (GAAP). All appropriations lapse at year end.

f. Budget amounts within funds, and between funds, may be transferred if amounts do not exceed the original budget. Such transfers must be approved by the budget officer and/or City Council, depending on established criteria. Budget augmentations in excess of original budgetary amounts may only be made with prior approval of the City Council, following a scheduled and noticed public hearing for those funds which have ad valorem taxes allocated as a source of revenue. For all other funds, the City Council must approve the budget augmentation with a majority vote and adopt a resolution providing therefore.

g. The above dates may be adjusted as necessary during legislative years.

h. The budget amounts reflected in the financial statements have been amended from the original amounts in accordance with the approved procedures.

i. In accordance with state statute, actual expenditures may not exceed budgeted appropriations of the various governmental functions (excluding the debt services functions) in the General Fund and total expenditures in other governmental funds. Per NRS 354.626, expenditures over budgeted appropriations are allowed for bond repayments, medium term obligation repayments and long-term contracts expressly authorized by law.

Expenditures over Appropriations – Deficit Fund Balances

No funds incurred deficit fund balances for fiscal year 2018. The individual Schedule of Revenues, Expenditures and Changes in Net Position – Budget and Actual report on page 79 shows that the component unit Johnson Springs Fund incurred an excess of expenses over appropriations for the year ended June 30, 2018 by ($40,642).

NOTE 4. Cash and Investments

A reconciliation of cash deposits and investments to the government-wide statement of net position as follows:

	Primary Government	Component Unit
Deposits:		
Cash on hand	$ 1,325	$ -
Cash in bank	2,672,187	(1,214,890)
Investments:		
Nevada local government investment pool	1,448,892	1,329,914
Total deposits and investments	$ 4,122,404	$ 115,024
Cash and cash equivalents	$ 2,880,095	$ 115,024
Restricted cash	1,242,309	-
	$ 4,122,404	$ 115,024

Deposits

Custodial Credit Risk

For deposits this is the risk that in the event of a bank failure, the government's deposit may not be returned. The City does not have a formal policy for custodial credit risk. As of June 30, 2018, $0 of the primary government and component unit's combined bank balance of $1,462,520 was exposed to custodial credit risk because it was either fully insured by FDIC insurance or collateralized by a pledging financial institution.

Investments

The Nevada State Treasurer's Office operates the Local Government Investment Pool (LGIP). The LGIP is an external investment pool operated by the Nevada Public Treasurer.

The LGIP is not registered with the SEC as an investment company. Deposits in the LGIP are not insured or otherwise guaranteed by the State of Nevada, and participants share proportionally in any realized gain or losses on investments.

The provisions of State Law (NRS 355.170) govern the investment of public funds as noted in Footnote 1.

NOTE 4. Cash and Investments, Continued

As of June 30, 2018 the government had the following investments:

Investment Type	Primary Government Fair Value	Component Unit Fair Value	Rating (1)	Weighted Average Maturity (2)
Nevada Local Government Pooled Investment Fund	$ 1,448,892	$ 1,329,914	N/A	142
Total Fair Value	$ 1,448,892	$ 1,329,914		

(1) Ratings are provided where applicable to indicate associated Credit Risk. N/A indicates not applicable.

(2) Interest Rate Risk is estimated using the weighted average days to maturity.

The City categorizes its fair value measurements within the fair value hierarchy established by generally accepted accounting principles. The hierarchy is based on the valuation inputs used to measure the fair value of the asset. Level 1 inputs are quoted prices in active markets for identical assets; Level 2 inputs are significant other observable inputs; Level 3 inputs are significant unobservable inputs.

The City has the following recurring fair value measurements as of June 30, 2018:

- Nevada Local Government's Investment Pool (LGIP):

	Primary Government	Component Unit
Level 1 inputs	$ 398,735	$ 365,992
Level 2 inputs	1,050,157	963,922
Total LGIP investment	$ 1,448,892	$ 1,329,914

Interest Rate Risk

Interest rate risk is the risk that changes in interest rates will adversely affect the fair value of an investment. The City's policy for managing its exposure to fair value loss arising from increasing interest rates is to comply with the provisions of State law (NRS 355.170).

Credit Risk

Credit risk is the risk that an issuer or other counterparty to an investment will not fulfill its obligations. The primary government and component unit's policy for reducing its exposure to credit risk is to limit its investments to the Nevada Local Government Investment Pool and to comply with State Law (NRS 355.170). The Nevada Local Government Investment Pool is unrated.

Concentration of Credit Risk

The Primary Government and the Component Unit place no limit on the amount the Primary Government or the Component Unit may invest in any one issue.

NOTE 4. Cash and Investments, Continued

Cash Restricted for Special Uses

The primary government and the component unit maintain restricted cash to comply with various legal and contractual requirements. Amounts restricted are as follows at June 30, 2018:

Medium Term Sales Tax Revenue Bond Reserves	$	276,925
1998 Sewer/Compost Revenue Bond Reserves		100,557
Sewer/Compost Revenue Bond Series 1999B Bond Reserves		115,320
Sewer/Compost Revenue Bond Series 1999A Bond Reserves		41,515
Closure / post closure trust funds		59,701
Waste Water Treatment Plant Revenue Bond Reserves		77,198
1998 Water Revenue Bond Reserves		173,712
Water Revenue Bonds, Series 2015 Bond Reserves		9,072
Water Rev Bonds Series 2015 - Asset Replacement		85,902
AB198 Capital Replacement Projects Fund		301,967
Unutilized Regional Transportation Commission Funds		440
Total restricted cash - primary government	$	1,242,309

NOTE 5. Receivables / Due from other Governments

Receivables in the governmental funds consist principally of room and franchise taxes due various businesses. Amounts due from other governments consist primarily of taxes due from the State of Nevada and grant revenues due from various granting agencies. All receivables and amounts due from other governments are considered by management to be fully collectible and therefore, no allowance for doubtful accounts is necessary.

Receivables in the proprietary funds represent service billings to customers and are shown net of an allowance for doubtful accounts. The allowance for doubtful accounts is estimated based on professional judgement and historical information. The allowances for doubtful accounts at June 30, 2018 were as follows:

Water Fund	$	-
Sewer Fund		-
Garbage/Compost Fund		71
Johnson Springs		-
	$	71

NOTE 6. Capital Assets

Governmental capital asset activity for the year ended June 30, 2018 was as follows:

Governmental Activities:	Balance 6/30/17	Additions	Deletions	Balance 6/30/18
Capital assets, not being depreciated:				
Land	$ 2,056,481	$ -	$ (419,198)	$ 1,637,283
Total capital assets, not being depreciated	2,056,481	-	(419,198)	1,637,283
Capital assets, being depreciated:				
Buildings	11,271,605	-	-	11,271,605
Other improvements	14,321,856	-	-	14,321,856
Machinery and equipment	3,584,327	39,000	-	3,623,327
Total capital assets, being depreciated	29,177,788	39,000	-	29,216,788
Less accumulated depreciation for:				
Buildings	(2,767,586)	(277,874)	-	(3,045,460)
Other improvements	(2,838,690)	(526,915)	-	(3,365,605)
Machinery and equipment	(2,903,207)	(244,672)	-	(3,147,879)
Total accumulated depreciation	(8,509,483)	(1,049,461)	-	(9,558,944)
Total capital assets, being depreciated, net	20,668,305	(1,010,461)	-	19,657,844
Governmental activities capital assets, net	$ 22,724,786	$ (1,010,461)	$ (419,198)	$ 21,295,127

Depreciation expense was charged to the functions/programs of the City as follows:

Governmental Activities:	
General government	$ 561,622
Judicial	6,787
Public safety	202,958
Public works	283
Health and sanitation	22,963
Culture and recreation	94,862
Community support	1,194
Streets and highways	158,792
Total depreciation expense - governmental activities	$ 1,049,461

NOTE 6. Capital Assets, Continued

Business-type capital asset activity for the year ended June 30, 2018 was as follows:

Business-Type Activities:	Balance 6/30/17	Additions	Deletions	Balance 6/30/18
Capital assets not being depreciated:				
Land	$ 111,000	$ -	$ -	$ 111,000
Total capital assets, not being depreciated	111,000	-	-	111,000
Capital assets being depreciated:				
Buildings	3,979,994	-	-	3,979,994
Other improvements	6,176,272	15,078	-	6,191,350
Machinery and equipment	4,213,072	270,938	(44,995)	4,439,015
Utility systems	18,016,369	19,216	-	18,035,585
Total capital assets, being depreciated	32,385,707	305,232	(44,995)	32,645,944
Less accumulated depreciation for:				
Buildings	(340,645)	(99,502)	-	(440,147)
Other improvements	(3,192,361)	(220,381)	-	(3,412,742)
Machinery and equipment	(3,482,472)	(154,487)	44,995	(3,591,964)
Utility systems	(5,483,695)	(539,936)	-	(6,023,631)
Total accumulated depreciation	(12,499,173)	(1,014,306)	44,995	(13,468,484)
Total capital assets, being depreciated, net	19,886,534	(709,074)	-	19,177,460
Business-type activities capital asset, net	$ 19,997,534	$ (709,074)	$ -	$ 19,288,460

Depreciation expense was charged to the functions/programs of the City as follows:

Business-Type Activities:	
Water Fund	$ 139,954
Sewer Fund	548,216
Combined Garbage / Compost Facility Fund	326,136
Total depreciation expense - business-type activities	$ 1,014,306

NOTE 6. Capital Assets, Continued

Component unit capital asset activity for the year ended June 30, 2018 was as follows:

Component Unit - Johnson Springs	Balance 06/30/17	Additions	Deletions	Balance 06/30/18
Capital assets not being depreciated:				
Land	$ 18,000	$ -	$ -	$ 18,000
Total capital assets, not being depreciated	18,000	-	-	18,000
Capital assets being depreciated:				
Buildings	6,836,936	-	-	6,836,936
Other improvements	411,632	-	-	411,632
Machinery and equipment	506,351	-	-	506,351
Utility system	5,305,132	-	-	5,305,132
Total capital assets, being depreciated	13,060,051	-	-	13,060,051
Less accumulated depreciation for:				
Buildings	(3,946,922)	(227,289)	-	(4,174,211)
Other improvements	(119,568)	(20,040)	-	(139,608)
Machinery and equipment	(363,701)	(12,118)	-	(375,819)
Water utility system	(1,623,971)	(132,845)	-	(1,756,816)
Total accumulated depreciation	(6,054,162)	(392,292)	-	(6,446,454)
Total capital assets, being depreciated, net	7,005,889	(392,292)	-	6,613,597
Johnson Springs component unit fund activities capital assets, net	$ 7,023,889	$ (392,292)	$ -	$ 6,631,597

NOTE 7. Long-Term Liabilities

The following is a summary of long-term liabilities for the year ended June 30, 2018:

	Date of Issue	Interest Rate	Year of Final Payment	Original Amount of Issue	Balance 6/30/17	Additions	Reductions	Balance 6/30/2018	Current Portion
Governmental Activities									
Bonds Payable:									
General Obligation Medium-Term Bonds, Series 2009	2/27/2009	4.46%	2019	2,200,000	$ 528,000	$ -	$ (258,000)	$ 270,000	$ 270,000
Medium Term Sales Tax Revenue Bond, Seriers 2009 (City Hall)	8/18/2009	4.38%	2039	5,225,000	4,433,383	-	(121,954)	4,311,429	127,408
General Obligation Medium-Term Bonds, Series 2015	7/14/2015	2.26%	2025	2,200,000	1,994,000	-	(210,000)	1,784,000	217,000
Total Bonds Payable					6,955,383	-	(589,954)	6,365,429	614,408
Capital leases payable:									
September 2014 Police Vehicle Lease	9/1/2013	4.33%	2018	281,059	61,074	-	(61,074)	-	-
Total Capital Lease Payable					61,074	-	(61,074)	-	-
Other liabilities									
Net Pension Liabilities					7,062,140	179,739	(473,463)	6,768,416	-
Compensated absences					280,360	181,710	(174,116)	287,954	144,000
Governmental Activity Long-Term Liabilities					$ 14,358,957	$ 361,449	$ (1,298,607)	$ 13,421,799	$ 758,408

For governmental activities, compensated absences and net position liabilities are generally liquidated through the General Fund.

NOTE 7. Long-Term Liabilities, continued

	Date of Issue	Interest Rate	Year of Final Payment	Original Amount of Issue	Balance 6/30/17	Additions	Reductions	Balance 6/30/2018	Current Portion
Business-Type Activities									
Enterprise Funds:									
Water Fund									
Bonds Payable:									
1998 Water Revenue Bonds	11/17/1998	4.75%	2038	3,058,300	$ 2,328,382	$ -	$ (63,129)	$ 2,265,253	$ 65,575
General Obligation Medium-Term Bonds, Series 2008	9/4/2008	4.95%	2018	800,000	332,000	-	(164,000)	168,000	168,000
General Obligation Limited Tax Medium-Term, Series 2014	6/17/2014	2.43%	2024	701,400	520,333	-	(64,999)	455,334	67,667
Water Revenue Bonds, Series 2015	10/8/2015	2.63%	2055	747,000	730,818	-	(11,166)	719,652	11,461
Total Bonds Payable					3,911,533	-	(303,294)	3,608,239	312,703
Other liabilities									
Net Pension Liabilities					391,873	13,382	(26,495)	378,760	-
Compensated absences					8,027	6,305	(4,985)	9,347	9,347
Total Water Fund Long Term Debt					4,311,433	19,687	(334,774)	3,996,346	322,050
Sewer Fund									
Bonds Payable:									
Waste Water Treatment Plant Revenue Bond	6/1/2012	2.75%	2052	2,637,000	2,420,418	-	(42,832)	2,377,586	43,336
General Obligation Limited Tax Medium-Term, Series 2014	6/17/2014	2.43%	2024	699,300	520,333	-	(64,999)	455,334	67,667
Total Bonds Payable					2,940,751	-	(107,831)	2,832,920	111,003
Other liabilities									
Net Pension Liabilities					474,113	44,875	(33,931)	485,057	-
Compensated absences					6,613	5,643	(4,107)	8,149	8,149
Total Sewer Fund Long Term Debt					$ 3,421,477	$ 50,518	$ (145,869)	$ 3,326,126	$ 119,152

NOTE 7. Long-Term Liabilities, continued

	Date of Issue	Interest Rate	Year of Final Payment	Original Amount of Issue	Balance 6/30/17	Additions	Reductions	Balance 6/30/2018	Current Portion
Combined Garbage / Compost Facility Fund									
Bonds Payable:									
1998 Sewer/Compost Revenue Bonds	11/17/1998	4.75%	2018	1,280,000	$ 181,647.00	$ -	$ (91,930)	$ 89,717	$ 89,718
Sewer/Compost Revenue Bonds Series 1999B	8/18/1999	4.50%	2019	1,500,000	310,494	-	(101,368)	209,126	105,908
Sewer/Compost Revenue Bonds Series 1999A	8/18/1999	4.50%	2019	540,000	111,777	-	(36,492)	75,285	38,127
General Obligation Limited Tax Medium-Term, Series 2014	6/17/2014	2.43%	2024	699,300	520,333	-	(65,000)	455,333	67,666
Total Bonds Payable					1,124,251	-	(294,790)	829,461	301,419
Capital leases payable:									
Garbage Truck - Compost/Garbage Lease	9/26/2012	3.32%	2018	232,157	82,492	-	(40,573)	41,919	41,919
2018 Caterpillar Wheel Loader Compost Lease	1/18/2018	4.20%	2023	231,738	-	231,738	(34,097)	197,641	28,462
Total Capital Lease Payable					82,492	231,738	(74,670)	239,560	70,381
Other liabilities									
Net Pension Liabilities					463,181	36,759	(32,685)	467,255	-
Compensated absences					11,561	9,307	(7,179)	13,689	13,689
Total Combined Garbage / Compost Faciltiy Fund					1,681,485	277,804	(409,324)	1,549,965	385,489
Business-Type Activity Long-Term Liabilities					$ 9,414,395	$ 348,009	$ (889,967)	$ 8,872,437	$ 826,691
Component Unit									
Johnson Springs									
Other liabilities									
Net Pension Liabilities					$ 166,774	$ 33,113	$ (13,068)	$ 186,819	$ -
Compensated absences					10,950	5,310	(6,799)	9,461	9,461
Componet Unit Long-Term Liabilities					$ 177,724	$ 38,423	$ (19,867)	$ 196,280	$ 9,461

NOTE 7. Long-Term Liabilities, Continued

Revenue Bonds

The City has pledged future net revenues from the City's Municipal Water System to repay $3,058,300 and $747,000 in water revenue bonds issued in November 1998 and 2016, respectively, with interest rates of 4.75% and 2.63%, respectively. Proceeds from the bonds provided financing to pay for the cost to acquire, improve, construct, equip, operate, and maintain a water project for the City. The bonds are payable solely from net revenues from the Municipal Water System and are payable through 2038 and 2055.

The City has pledged future net revenues from the City's Compost Facility to repay $1,280,000 and $2,040,000 in sewer/compost revenue bonds issued in November 1998 and August 1999 with interest rates of 4.75% and 4.5%, respectively. Proceeds from the bonds provided financing for the development and construction of a compost facility. The bonds are payable solely from future net revenues from the Compost Facility and are payable through 2018 and 2019.

The City has pledged future net revenues from the City's Sewer Facility to repay $2,637,000 in sewer revenue bonds issued in June 2012 with an interest rate of 2.75%. Proceeds from the bonds provided financing for the construction of a new sewer facility. The bonds are payable solely from future net revenues from the Sewer Facility and are payable through 2052.

The following schedules reflect debt service requirements to maturity of the City's debt as of June 30, 2018:

Period Ending	Governmental Activities			Business Type Activities		
June 30	Principal	Interest	Total	Principal	Interest	Total
2019	$ 614,408	$ 236,000	$ 850,408	$ 725,124	$ 245,134	$ 970,258
2020	358,096	213,276	571,372	478,319	222,480	700,799
2021	372,037	202,159	574,196	351,805	206,124	557,929
2022	386,243	190,597	576,840	366,815	195,717	562,532
2023	401,726	178,566	580,292	383,031	184,861	567,892
2024-2028	1,484,476	722,291	2,206,767	1,039,161	784,150	1,823,311
2029-2033	1,077,919	489,581	1,567,500	953,156	610,948	1,564,104
2034-2038	1,340,959	226,541	1,567,500	1,158,128	405,903	1,564,031
2039-2043	329,565	8,438	338,003	651,554	205,048	856,602
2044-2048	-	-	-	570,602	124,703	695,305
2049-2053	-	-	-	520,653	42,837	563,490
2054-2058	-	-	-	72,272	2,714	74,986
	$ 6,365,429	$ 2,467,449	$ 8,832,878	$ 7,270,620	$ 3,230,619	$ 10,501,239

NOTE 7. Long-Term Liabilities, Continued

Period Ending June 30	Total Bonded Debt & Notes		
	Principal	Interest	Total
2019	$ 1,339,532	$ 481,134	$ 1,820,666
2020	836,415	435,756	1,272,171
2021	723,842	408,283	1,132,125
2022	753,058	386,314	1,139,372
2023	784,757	363,427	1,148,184
2024-2028	2,523,637	1,506,441	4,030,078
2029-2033	2,031,075	1,100,529	3,131,604
2034-2038	2,499,087	632,444	3,131,531
2039-2043	981,119	213,486	1,194,605
2044-2048	570,602	124,703	695,305
2049-2053	520,653	42,837	563,490
2054-2058	72,272	2,714	74,986
	$ 13,636,049	$ 5,698,068	$ 19,334,117

NOTE 8. Capital Leases Payable

The government has entered into two lease agreements, which are considered capital leases in accordance with Financial Accounting Standard Board ASC 840-30-25. The two leases are shown in the combined garbage/compost fund. The total amount of equipment capitalized under the leases is $463,545 for the business-type activities. Amortization on capital leases is included in depreciation expense.

The following is an annual schedule of future minimum lease payments with interest rates ranging from 1.88% to 4.2% under the capital leases, together with the present value of the net minimum lease payments:

Year Ending June 30	Governmental Activities	Business-type Activities
2019	$ -	$ 79,967
2020	-	43,654
2021	-	42,408
2022	-	41,111
2023	-	62,313
Total remaining minimum lease payments	-	269,453
Less amount representing interest	-	(29,893)
Present value of net remaining minimum lease payments	$ -	$ 239,560

NOTE 9. Segment Information

In previous years, the component unit, Johnson Springs, issued separate revenue bonds to finance its operations. Segment information for Johnson Springs is disclosed below and also in the supplementary information. Segment information for the other proprietary funds is disclosed in the basic financial statements.

	06/30/18
Operating revenues	$ 652,108
Depreciation and amortization	(392,292)
Operating expenses	(490,050)
Operating income/(loss)	(230,234)
Nonoperating revenues and (expenses)	(100,711)
Change in net position	(330,945)
Beginning net position	4,595,754
Ending net position	4,264,809
Capital asset additions, including capitalized interest	-
Net working capital	(2,192,346)
Total assets	6,817,644
Total deferred outflows	34,296
Current liabilities	40,748
Due to primary government	2,337,645
Bonds and other long term debt obligations	186,819
Total deferred inflows	21,919
Net Position	
Net investment in capital assets	4,293,952
Unrestricted	(29,143)
Total Net Position	$ 4,264,809
Condensed Statement of Cash Flows	
Net cash flows from:	
Operating activities	$ 197,040
Noncapital financing activities	(76,743)
Capital and related financing activities	(109,128)
Investing activities	19,001
Net Increase (decrease)	$ 30,170
Beginning cash and cash equivalents	84,854
Ending cash and cash equivalents	$ 115,024

NOTE 10. Interfund Receivables, Payables, and Transfers

As of June 30, 2018 interfund receivables and payables that resulted from various interfund transactions for the primary government were as follows:

	Due from Other Funds	Due to Other Funds
General Fund	$ 160,000	$ -
Health Insurance Internal Service Fund	-	160,000
Total	$ 160,000	$ 160,000

As of June 30, 2018, interfund receivables and payables that resulted from transactions between the primary government and the component unit were as follows:

	Due from Component Unit	Due to Primary Government
Water Fund:		
Interest receivable	$ 72,392	$ -
Debt repayment receivable	2,265,253	-
Component Unit		
Interest payable	-	72,392
Debt repayment payable	-	2,265,253
Total	$ 2,337,645	$ 2,337,645

In 1998, the City of West Wendover issued long term debt obligations to complete a water project in behalf of its constituents. The component unit, which benefited from the project, is assisting with the repayment of the revenues bonds issued in the water fund. Hence, there is an interfund balance between the water fund and the component unit, Johnson Springs as shown above.

Interfund transfers for the fiscal year ended June 30, 2018 are as follows:

	Transfers out:		
Transfer in:	General	Non-major Ad Valorem Capital Projects	Total Transfers in
Nonmajor Governmental Funds			
Welcome Center Fund	$ 111,700	$ -	$ 111,700
Wendover Will Landmark Fund	17,100	-	17,100
Capital Projects Fund	553,300	55,000	608,300
Total transfers out	$ 682,100	$ 55,000	$ 737,100

NOTE 10. Interfund Receivables, Payables, and Transfers, Continued

Transfers are used to (1) move revenues from the fund that statute or budget requires to collect them to the fund that statute or budget requires to expend them and (2) use unrestricted revenues collected in the general fund to finance various programs accounted for in other funds in accordance with budgetary authorizations.

NOTE 11. Deferred Compensation Plan

The City offers its employees a deferred compensation plan created in accordance with Internal Revenue Code Section 457. The plan, available to all full-time employees at their option, permits participants until termination, retirement, death, or unforeseeable emergency.

Plan assets are held and administered by The Hartford. The plan does not meet the definition of a fiduciary fund as defined in GASB 32, and therefore, is not reported in this financial statement.

NOTE 12. Room Taxes

On October 16, 2001, Ordinance 01-20 was passed, increasing room taxes from 10% to 16%. Of this rate, 14% is allocated to the West Wendover Recreation District. Additionally, the Ordinance allows for 1% to be paid to a non-profit entity to promote tourism and recreation throughout the City of West Wendover. At June 30, 2018 this amount was held as restricted in the Recreation Fund.

NOTE 13. Commitments and Contingent Liabilities

Amounts received or receivable from grantor agencies are subject to audit and adjustment by grantor agencies, principally the federal government. Any disallowed claims, including amounts already collected may constitute a liability of the applicable funds. The amount, if any, of expenditures which may be disallowed by the grantor cannot be determined at this time although the City expects such amounts, if any, to be immaterial.

The City is party to legal proceedings which normally occur in governmental operations. City officials believe these legal proceedings are not likely to have a material adverse impact on the financial position of the City.

NOTE 14. Available Borrowing Capacity

The lawful general obligation debt limit for city governments is established by State statute not to exceed thirty percent of the total last assessed valuation of the taxable property of the City. At June 30, 2018, the general obligation debt limit and available borrowing capacity of the City of West Wendover was $42,243,779.

NOTE 15. Closure and Post-Closure Care Cost

State and Federal laws and regulations require that the City place a final cover on its landfill sites and perform certain maintenance and monitoring functions at the landfill sites for a minimum of thirty years after closure. In addition to operating expenses related to current activities of the landfill sites, an expense provision and related liability should be recognized based on the future closure and post-closure care costs that will be incurred near or after the date the landfills no longer accepts waste. GASB Statement 18 requires the recognition of these landfill closure and post-closure care costs based on the amount of the landfill used during the year. The City does not report a liability for the estimated closure and post-closure care costs because it has passed a resolution that authorizes participation in the landfill assurance program established through the Nevada Public Agency Insurance Pool as a mechanism to demonstrate financial responsibility for the closure and post-closure care costs. Because the City has, in effect, transferred its responsibility for closure and post-closure care costs to another entity through the purchase of the insurance policy, the liabilities are not reported on the City's financial statements as per GASB 18.

The estimated liability for landfill closure and post-closure care costs under GASB Statement 18 requirements is $580,280 as of June 30, 2018. The City had two cells in operation during fiscal year 2018. The Class I cell has used 100% of available capacity and a new Class I cell was constructed in fiscal year 2016 according to the 2014 Volumetric Survey. The City is now in the process of creating new cells for operation. The estimated closure and post-closure costs are based on the amount that would be paid if all equipment, facilities, and services required to close, monitor, and maintain landfill modules currently in use for the cell in operation during 2018. The City maintained an insurance policy with a face amount of $520,579 at June 30, 2018. The financial assurance shortfall between the insurance policy face amount and the estimated closure and post-closure care costs will need to be covered by the City using one of the allowable mechanisms found at NAC 444.68525. For fiscal year 2018, the shortfall is deemed to be covered by cash and investments on hand in the garbage/compost fund at year end. The City has set aside $59,701 in restricted cash to potentially fund a trust account as listed in note 4. The City plans to work with the Nevada Department of Environmental Protection to officially select and implement an allowable mechanism found at NAC 444.68525 during fiscal year 2018 to address the shortfall in coverage.

NOTE 16. Risk Management

The City is exposed to various risks of loss related to torts; theft of, damage to, and destruction of assets, errors and omissions; injuries to employees; and natural disasters. These risks are covered by commercial insurance purchased from independent third parties. Settled claims from these risks have not exceeded commercial insurance coverage for the past three years.

The City has chosen to establish a risk financing fund for risks associated with the employee's health insurance plan. The risk financing fund is accounted for as an internal service fund where assets are set aside for claim settlement. A premium is charged to each function which accounts for full-time employees.

Liabilities of funds are reported when it is probable that a loss has occurred and the amount of the loss can be reasonably estimated. There were no liabilities that met these criteria at June 30, 2018. Liabilities include an amount for claims that have been incurred but not reported (IBNR). Claim liabilities are calculated considering the effects of inflation, recent claim settlement trends including frequency and amount of pay-outs and other economic and social factors.

Changes in the balances of claims liabilities during the past three fiscal years are as follows:

Fiscal Year Ended June 30	Unpaid Claims Beginning of Fiscal Year	Incurred Claims	Claim Payments	Unpaid Claims End of Fiscal Year
2018	$ -	$ 651,673	$ 651,673	$ -
2017	$ -	$ 530,207	$ 530,207	$ -
2016	$ -	$ 428,050	$ 428,050	$ -

NOTE 17. Retirement and Pension Plans

Public Employees' Retirement System of Nevada (PERS)

Plan description

PERS administers a cost-sharing, multiple-employer, defined benefit public employees' retirement system which includes both Regular and Police/Fire members. The System was established by the Nevada Legislature in 1947, effective July 1, 1948. The System is administered to provide a reasonable base income to qualified employees who have been employed by a public employer and whose earnings capacities have been removed or substantially impaired by age or disability.

NOTE 17. Retirement and Pension Plans, Continued

Benefits provided

Benefits, as required by the Nevada Revised Statutes (NRS or statute), are determined by the number of years of accredited service at time of retirement and the member's highest average compensation in any 36 consecutive months with special provisions for members entering the System on or after January 1, 2010. Benefit payments to which participants or their beneficiaries may be entitled under the plan include pension benefits, disability benefits, and survivor benefits.

Monthly benefit allowances for members are computed as 2.5% of average compensation for each accredited year of service prior to July 1, 2001. For service earned on and after July 1, 2001, this multiplier is 2.67% of average compensation. For members entering the System on or after January 1, 2010, there is a 2.5% multiplier.

The System offers several alternatives to the unmodified service retirement allowance which, in general, allow the retired employee to accept a reduced service retirement allowance payable monthly during his or her lifetime and various optional monthly payments to a named beneficiary after his or her death.

Post-retirement increases are provided by authority of NRS 286.575 - .579.

Vesting

Regular members are eligible for retirement at age 65 with five years of service, at age 60 with 10 years of service, or at any age with thirty years of service. Regular members entering the System on or after January 1, 2010, are eligible for retirement at age 65 with five years of service, or age 62 with 10 years of service, or any age with thirty years of service.

Police/Fire members are eligible for retirement at age 65 with five years of service, at age 55 with ten years of service, at age 50 with twenty years of service, or at any age with twenty-five years of service. Police/Fire members entering the System on or after January 1, 2010, are eligible for retirement at 65 with five years of service, or age 60 with ten years of service, or age 50 with twenty years of service, or at any age with thirty years of service. Only service performed in a position as a police officer or firefighter may be counted towards the eligibility for retirement as Police/Fire accredited service.

The normal ceiling limitation on monthly benefits allowances is 75% of average compensation. However, a member who has an effective date of membership before July 1, 1985, is entitled to a benefit of up to 90% of average compensation. Both Regular and Police/Fire members become fully vested as to benefits upon completion of five years of service.

NOTE 17. Retirement and Pension Plans, Continued

Contributions

The authority for establishing and amending the obligation to make contributions and member contribution rates is set by stature. New hires, in agencies which did not elect the Employer-Pay Contribution (EPC) plan prior to July 1, 1983, have the option of selecting one of two contribution plans. Contributions are shared equally by employer and employee. Employees can take a reduced salary and have contributions made by the employer (EPC) or can make contributions by a payroll deduction matched by the employer.

The System's basic funding policy provides for periodic contributions at a level pattern of cost as a percentage of salary throughout an employee's working lifetime in order to accumulate sufficient assets to pay benefits when due.

The System receives an actuarial valuation on an annual basis indicating the contribution rates required to fund the System on an actuarial reserve basis. Contributions actually made are in accordance with the required rates established by the Nevada Legislature. These statutory rates are increased/decreased pursuant to NRS 286.421 and 286.450.

The actuary funding method used is the Entry Age Normal Cost Method. It is intended to meet the funding objective and result in a relatively level long-term contributions requirement as a percentage of salary.

For fiscal years ended June 30, 2016, 2017, and 2018, the Statutory Employer/employee matching rate was 14.50% for Regular and 20.75% for Police/Fire.

For the fiscal year ended June 30, 2016, 2017, and 2018 the Employer-Pay Contribution (EPC) rate was 28% for Regular and 40.50% for Police/Fire.

The City's contributions for the current and two preceding fiscal years, all of which were equal to the required contributions, were as follows:

Year Ended June 30,	Regular Fund	Police/Fire Fund
2016	$ 220,400	$ 318,793
2017	228,592	330,642
2018	236,938	342,714

NOTE 17. Retirement and Pension Plans, Continued

Investment policy

The System's policies which determine the investment portfolio target asset allocation are established by the Board. The asset allocation is reviewed annually and is designed to meet the future risk and return needs of the System. The following was the Board adopted policy target asset allocation as of June 30, 2017:

Asset Class	Target Allocation	Long-term Geometric Expected Real Rate of Return*
Domestic equity	42%	5.50%
International equity	18%	5.75%
Domestic fixed income	30%	0.25%
Private markets	10%	6.80%

*As of June 30, 2017, PERS' long-term inflation assumption was 2.75%.

Pension liability

Net pension liability

At June 30, 2018, the City reported a liability of $8,286,307 for its proportionate share of the PERS' net pension liability. The net pension liability was measured as of June 30, 2017, and the total pension liability used to calculate the net pension liability was determined by an actuarial valuation as of that date. The employer allocation percentage of the net pension liability was based on the total contributions due on wages paid during the measurement period. Each employer's proportion of the net pension liability is based on their combined employer and member contributions relative to the total combined employer and member contributions for all employers for the period ended June 30, 2017. The City's proportion measured as of June 30, 2017, was 0.06230 percent, which was an decrease of 0.00130 percent from its proportion measured as of June 30, 2016.

Pension liability discount rate sensitivity

The following presents the net pension liability of the PERS as of June 30, 2018, calculated using the discount rate of 7.50%, as well as what the PERS net pension liability would be if it were calculated using a discount rate that is 1-percentage-point lower (6.50%) or 1-percentage-point higher (8.50%) than the current discount rate:

	1% Decrease (6.50%)	Discount Rate (7.50%)	1% Increase (8.50%)
Proportionate share of Net pension (asset) / liability	$ 12,526,583	$ 8,286,307	$ 4,764,692

NOTE 17. Retirement and Pension Plans, Continued

Pension plan fiduciary net position

Detailed information about the pension plan's fiduciary net position is available in the PERS Comprehensive Annual Financial Report, available on the PERS website www.nvpers.org.

Actuarial assumptions

The City's net pension liability was measured as of June 30, 2017, and the total pension liability used to calculate the net pension liability was determined by an actuarial valuation as of that date. The total pension liability was determined using the following actuarial assumptions, applied to all periods included in the measurement:

Inflation rate	2.75%
Payroll growth	5.00%, including inflation
Investment rate of return	7.50%
Productivity pay increase	0.50%
Projected salary increases	Regular: 4.25% to 9.15%, depending on service Police/Fire: 4.55% to 13.90%, depending on service Rates include inflation and productivity increases
Consumer Price Index	2.75%
Other assumptions	Same as those used in the June 30, 2017 funding actuarial valuation

Actuarial assumptions used in the June 30, 2017 valuation were based on the results of the experience review completed in 2017.

The discount rate used to measure the total pension liability was 7.50% as of June 30, 2017 and 8.00% as of June 30, 2016. The projection of cash flows used to determine the discount rate assumed that employee and employer contributions will be made at the rate specified in statute. Based on that assumption, the pension plan's fiduciary net position at June 30, 2017, was projected to be available to make all projected future benefit payments of current active and inactive employees. Therefore, the long-term expected rate of return on pension plan investments was applied to all periods of projected benefit payments to determine the total pension liability as of June 30, 2017 and June 30, 2016.

Pension expense and deferred outflows/inflows of resources related to pensions

For the year ended June 30, 2018, the City recognized pension expense for PERS of $587,952. At June 30, 2018, the City reported deferred outflows of resources and deferred inflows of resources related to pensions from the following sources:

NOTE 17. Retirement and Pension Plans, Continued

	Deferred Outflows of Resources	Deferred Inflows of Resources
Differences between expected and actual experience	$ -	$ 543,749
Net difference between projected and actual earnings on pension plan investments	53,801	-
Subtotal	603,519	543,749
Changes in proportion and differences between contributions and proportional share of contributions	338,045	428,457
Contributions subsequent to the measurement date	579,650	-
Total	$ 1,521,214	$ 972,206
Governmental activities	$ 1,242,559	$ 794,117
Business-type activities	278,655	178,089
	$ 1,521,214	$ 972,206

Average expected remaining service lives 6.39 years

The $579,650 reported as deferred outflows of resources related to PERS pensions resulting from City contributions subsequent to the measurement date will be recognized as a reduction of the net pension liability in the subsequent fiscal year. Other amounts reported as deferred outflows of resources and deferred inflows of resources related to PERS pensions, excluding the changes in proportion and differences between actual contributions and proportionate share of contributions will be recognized in pension expense as follows:

Year Ending June 30,	Deferred Outflows (Inflows) of Resources
2019	$ (148,600)
2020	192,364
2021	49,679
2022	(135,451)
2023	70,039
2024	31,740
Thereafter	-

NOTE 18. Restatement Adjustment

As mentioned in Note 1 to the financial statements, the City implemented the provisions of GASB Statement No. 82, *Pension Issues- an Amendment of GASB Statements No. 67, No. 68, and No. 73*. GASB Statement No. 82 improves consistency in the application of pension accounting and financial reporting requirements by addressing certain issues that have been raised with respect to Statements No. 67, *Financial Reporting for Pension Plans*, No. 68, *Accounting and Financial Reporting for Pensions*, and No. 73, *Accounting and Financial Reporting for Pensions and Related Assets That Are Not within the Scope of GASB Statement 68, and Amendments to Certain Provisions of GASB Statements 67 and 68*. This resulted in a restatement of beginning net position as follows:

	Governmental Activities	Business Activities	Component Unit	Total
Restatement adjustment - implementation of GASB 82:				
Total restatement adjustment	$ (586,107)	$ (110,313)	$ (13,842)	$ (710,262)

REQUIRED SUPPLEMENTARY INFORMATION

BUDGETARY COMPARISON SCHEDULES FOR THE FOLLOWING MAJOR FUNDS:

The **General Fund** is the City's primary operating fund. It accounts for all financial resources of the general government, except for those required to be accounted for in another fund.

The **Recreation Fund** is used to account for the City's share of room tax proceeds and the distribution of those funds to the recreation district.

PUBLIC EMPLOYEES' RETIREMENT SYSTEM OF NEVADA SCHEDULES

CITY OF WEST WENDOVER, NEVADA
General Fund
Schedule of Revenues, Expenditures, and Changes in Fund Balance
Budget and Actual
For the Year Ended June 30, 2018
(With Comparative Actual Amounts for the Year Ended June 30, 2017)

	Original Budget	Final Budget	Actual	Variance with Final Budget	2017
Revenues					
Property taxes					
Ad valorem	$ 1,269,800	$ 1,269,800	$ 1,249,718	$ (20,082)	$ 1,219,745
Personal property	188,600	188,600	229,294	40,694	199,595
Central assessments	24,200	24,200	24,668	468	23,627
Total property taxes	1,482,600	1,482,600	1,503,680	21,080	1,442,967
Licenses and permits					
Liquor licenses	1,200	1,200	480	(720)	1,220
City gaming licenses	216,700	216,700	221,136	4,436	215,595
Animal licenses	1,000	1,000	1,175	175	1,348
Business licenses	19,000	21,500	16,885	(4,615)	15,615
Right of way toll	283,900	295,900	290,142	(5,758)	281,227
Building permits	50,000	80,000	79,901	(99)	109,538
Special permits and fees	3,000	28,000	5,220	(22,780)	1,540
Franchise fees	368,300	368,300	397,894	29,594	376,520
Carlines taxes	100	100	97	(3)	99
Total licenses and permits	943,200	1,012,700	1,012,930	230	1,002,702
Intergovernmental revenue					
State consolidated revenue	2,667,200	2,667,200	2,760,581	93,381	2,576,081
1.75 cent gas tax	36,900	36,900	36,503	(397)	37,463
2.35 cent gas tax	49,500	49,500	48,942	(558)	49,476
County road tax	26,100	26,100	26,007	(93)	25,352
County transportation funds	190,000	190,000	184,179	(5,821)	180,000
County gaming tax	442,700	442,700	457,909	15,209	431,418
Federal/state grants	34,400	94,400	50,459	(43,941)	41,343
Infrastructure tax	75,000	75,000	75,101	101	-
Marijuana revenue disbursement	-	5,500	5,485	(15)	-
Reimbursement from Elko County	140,400	140,400	140,400	-	167,700
Total intergovernmental revenue	3,662,200	3,727,700	3,785,566	57,866	3,508,833
Charges for services					
Special police services	2,000	2,000	4,710	2,710	1,675
Work cards	6,500	6,500	4,070	(2,430)	3,940
Special fire protection services	10,000	10,000	17,968	7,968	8,793
Dispatch fees	5,200	5,200	5,616	416	5,184
Animal shelter fees	3,000	3,000	2,212	(788)	1,541
Pipeline administrative services	1,900	1,900	1,900	-	1,900
Miscellaneous	15,500	15,500	14,256	(1,244)	16,221
Total general	44,100	44,100	50,732	6,632	39,254
Fines and forfeitures					
Fines and fees	85,600	85,600	82,892	(2,708)	92,079
Total fines and forfeitures	85,600	85,600	82,892	(2,708)	92,079
Miscellaneous					
Interest	1,000	4,500	5,725	1,225	5,512
Donations	163,000	163,000	163,804	804	169,115
Rents and royalties	8,900	8,900	10,955	2,055	11,884
Miscellaneous	15,000	6,000	6,601	601	8,795
Total miscellaneous	187,900	182,400	187,085	4,685	195,306
Total revenues	6,405,600	6,535,100	6,622,885	87,785	6,281,141

(continued)

CITY OF WEST WENDOVER, NEVADA
General Fund
Schedule of Revenues, Expenditures, and Changes in Fund Balance
Budget and Actual
For the Year Ended June 30, 2018
(With Comparative Actual Amounts for the Year Ended June 30, 2017), Continued

	Original Budget	Final Budget	Actual	Variance with Final Budget	2017
Expenditures					
General government					
Administration and finance					
Salaries and wages	486,905	486,905	503,993	(17,088)	392,892
Employee benefits	132,895	256,095	246,238	9,857	166,100
Services and supplies	375,300	475,100	462,108	12,992	367,867
Total administration and finance	995,100	1,218,100	1,212,339	5,761	926,859
Elections					
Services and supplies	-	-	-	-	1,321
Total general government	995,100	1,218,100	1,212,339	5,761	928,180
Judicial					
Municipal court					
Salaries and wages	219,588	219,588	209,857	9,731	178,201
Employee benefits	83,312	83,312	75,342	7,970	82,664
Services and supplies	51,100	51,100	47,943	3,157	47,191
Total judicial	354,000	354,000	333,142	20,858	308,056
Public safety					
Police					
Salaries and wages	1,343,161	1,343,161	1,346,406	(3,245)	1,111,417
Employee benefits	436,939	436,939	431,104	5,835	611,645
Services and supplies	235,200	262,000	199,860	62,140	228,302
Capital outlay	40,000	97,000	39,230	57,770	13,507
Total police department	2,055,300	2,139,100	2,016,600	122,500	1,964,871
Fire					
Salaries and wages	510,883	510,883	509,107	1,776	411,721
Employee benefits	157,617	157,617	150,363	7,254	216,989
Services and supplies	96,300	96,300	88,981	7,319	80,710
Total fire department	764,800	764,800	748,451	16,349	709,420
Dispatch center					
Salaries and wages	343,160	343,160	309,225	33,935	291,277
Employee benefits	110,140	110,140	99,703	10,437	145,550
Services and supplies	57,700	57,700	40,183	17,517	42,285
Total dispatch center	511,000	511,000	449,111	61,889	479,112
Total public safety	3,331,100	3,414,900	3,214,162	200,738	3,153,403
Public works					
Paved streets					
Salaries and wages	43,353	43,353	23,978	19,375	29,690
Employee benefits	16,347	16,347	7,881	8,466	12,326
Services and supplies	139,800	145,500	136,616	8,884	114,460
Total paved streets	199,500	205,200	168,475	36,725	156,476

(continued)

CITY OF WEST WENDOVER, NEVADA
General Fund
Schedule of Revenues, Expenditures, and Changes in Fund Balance
Budget and Actual
For the Year Ended June 30, 2018
(With Comparative Actual Amounts for the Year Ended June 30, 2017), Continued

	Original Budget	Final Budget	Actual	Variance with Final Budget	2017
General					
Salaries and wages	249,338	249,338	247,158	2,180	190,761
Employee benefits	71,462	71,462	85,070	(13,608)	61,590
Services and supplies	32,200	30,900	24,316	6,584	26,069
Total general	353,000	351,700	356,544	(4,844)	278,420
Total public works	552,500	556,900	525,019	31,881	434,896
Community development					
Salaries and wages	150,379	150,379	149,921	458	131,309
Employee benefits	36,321	36,321	35,944	377	51,943
Services and supplies	153,200	123,200	76,045	47,155	96,224
Total community development	339,900	309,900	261,910	47,990	279,476
Health					
Public health services					
Services and supplies	3,000	7,500	8,825	(1,325)	14,637
Animal control					
Salaries and wages	68,390	68,390	68,053	337	57,937
Employee benefits	24,610	24,610	19,282	5,328	25,641
Services and supplies	19,500	26,000	23,057	2,943	25,516
Total animal control	112,500	119,000	110,392	7,283	109,094
Total health	115,500	126,500	119,217	5,958	123,731
Culture and recreation					
Library service					
Services and supplies	17,600	17,600	13,116	4,484	12,748
Total culture and recreation	17,600	17,600	13,116	4,484	12,748
Community support					
Miscellaneous					
Services and supplies	12,800	12,800	15,015	(2,215)	32,062
Total community support	12,800	12,800	15,015	(2,215)	32,062
Debt services	119,300	119,300	119,238	62	119,334
Total expenditures	5,837,800	6,130,000	5,813,158	315,517	5,391,886
Excess (deficiency) of revenues over (under) expenditures	567,800	405,100	809,727	(404,627)	889,255
Other financing sources (uses)					
Transfers in	-	1,800	-	(1,800)	-
Transfers out	(953,000)	(675,000)	(682,100)	(7,100)	(1,783,603)
Total other financing sources and uses	(953,000)	(673,200)	(682,100)	(8,900)	(1,783,603)
Net change in fund balance	(385,200)	(268,100)	127,627	395,727	(894,348)
Fund balance, beginning of year	926,883	926,883	926,883	-	1,844,231
Restatement adjustment	-	-	-	-	(23,000)
Fund balance, end of year	$ 541,683	$ 658,783	$ 1,054,510	$ 395,727	$ 926,883

CITY OF WEST WENDOVER, NEVADA
Recreation Fund
Schedule of Revenues, Expenditures, and Changes in Fund Balance
Budget and Actual
For the Year Ended June 30, 2018
(With Comparative Actual Amounts for the Year Ended June 30, 2017)

	Original Budget	Final Budget	Actual	Variance with Final Budget	2017
Revenues					
Taxes					
Room taxes	$ 2,501,700	$ 2,419,500	$ 2,389,961	$ (29,539)	$ 2,377,383
Total revenues	2,501,700	2,419,500	2,389,961	(29,539)	2,377,383
Expenditures					
Culture and recreation					
Room tax distribution	2,518,800	2,454,600	2,394,512	60,088	2,328,938
Total culture and recreation	2,518,800	2,454,600	2,394,512	60,088	2,328,938
Total expenditures	2,518,800	2,454,600	2,394,512	60,088	2,328,938
Excess (deficiency) of revenues over (under) expenditures	(17,100)	(35,100)	(4,551)	30,549	48,445
Other financing sources (uses)					
Transfers in	-	-	-	-	-
Transfers out	-	-	-	-	-
Total other financing sources and uses	-	-	-	-	-
Net change in fund balance	(17,100)	(35,100)	(4,551)	30,549	48,445
Fund balance, beginning of year	162,168	162,168	162,168	-	113,723
Fund balance, end of year	$ 145,068	$ 127,068	$ 157,617	$ 30,549	$ 162,168

CITY OF WEST WENDOVER, NEVADA
Schedule of the Proportionate Share of the Net Pension Liability
Public Employees' Retirement System of Nevada
June 30, 2018
Last 10 Fiscal Years

	Reporting Fiscal Year (Measurement Date)			
	2018 (2017)	**2017 (2016)**	**2016 (2015)**	**2015 (2014)**
Proportion of the net pension liability (asset)	0.062300%	0.063600%	0.059820%	0.068384%
Proportionate share of the net pension liability (asset)	$ 8,286,307	$ 8,558,081	$ 6,854,700	$ 6,653,165
Covered payroll	$ 3,429,997	$ 3,355,482	$ 2,961,477	$ 3,113,721
Proportionate share of the net pension liability (asset) as a percentage of its covered payroll	241.58%	255.05%	231.46%	213.67%
Plan fiduciary net position as a percentage of the total pension liability	74.4%	72.2%	75.1%	76.3%

The City implemented GASB 68 in fiscal year 2015. Prior year information is not available.

CITY OF WEST WENDOVER, NEVADA
Schedule of Contributions
Public Employees' Retirement System of Nevada
June 30, 2018
Last 10 Fiscal Years

	Reporting Fiscal Year			
	2018	**2017**	**2016**	**2015**
Contractually required contribution	579,653 *	$ 559,234 *	$ 539,193 *	$ 461,652 *
Contributions in relation to the contractually required contribution	$ (579,653)	$ (559,234)	$ (539,193)	$ (461,652)
Contribution deficiency (excess)	$ -	$ -	$ -	$ -
Covered payroll	$ 3,327,353	$ 3,429,997	$ 3,355,482	$ 2,961,477
Contributions as a percentage of covered-employee payroll	17.42%	16.30%	16.07%	15.59%

Note: The entity implemented GASB 68 in fiscal year 2015. Prior year information is not available.

The City implemented GASB 68 in fiscal year 2015. Prior year information is not available.

** All contributions shown reflect employer-paid contributions only. Member contributions are excluded. All values are restated due to GASB No. 82, which classifies contributions as member contributions for the purposes of GASB No. 68 if they are made by an employer to satisfy what are actually deemed to be member contribution requirements.*

This page left intentionally blank

SUPPLEMENTARY INFORMATION

NONMAJOR GOVERNMENTAL FUNDS

Special revenue funds are used to account for specific revenues that are legally restricted to expenditure for particular purposes.

The **Seizure and Forfeiture Fund** is used to account for seizures and forfeitures received by the City under City Resolution 1992-09, as provided for in NRS 179.1187

The **Court Administrative Assessment Fund** is used to account for fees collected by the court as required by Nevada Revised Statues Section 176.059, which are used to improve the operations of the court.

The **Welcome Center Fund** is used to account for the merchandise sales and operations of the Welcome Center as established under City Resolution 2001-04.

The **Wendover Will Landmark Fund** is used to account for the construction, maintenance, and related revenues and expenditures associated with the Wendover Will Landmark as established by City Resolution 2005-01.

The **Grant Fund** is used to account for various grants receipts and expenditures as outlined in Resolution 1996-14.

Capital project funds are used to account for the acquisition and construction of major capital facilities other than those financed by proprietary funds.

The **Capital Projects Fund** is used to account for the acquisition or construction of capital facilities as outlined in Resolution 1997-14.

The **Ad Valorem Capital Projects Fund** is used to account for revenue received from a special ad valorem tax that must be recorded in a capital projects fund and dedicated to capital project needs within the City, as established under NRS 268.045.

CITY OF WEST WENDOVER, NEVADA
Combining Balance Sheet
Nonmajor Governmental Funds
June 30, 2018

	Special Revenue					Capital Project		Total
	Seizure Forfeiture Fund	Court Administrative Assessment Fund	Welcome Center Fund	Wendover Will Landmark Fund	Grant Fund	Capital Projects Fund	Ad Valorem Capital Projects Fund	Nonmajor Governmental Funds
Assets								
Cash and investments	$ 25,176	$ 45,727	$ 6,544	$ 2,309	$ -	$ 41,065	$ 14,324	$ 135,145
Due from other governments	-	-	-	-	-	-	15,773	15,773
Inventory	-	-	1,497	-	-	-	-	1,497
Restricted cash	-	-	-	-	-	276,925	-	276,925
Total assets	$ 25,176	$ 45,727	$ 8,041	$ 2,309	$ -	$ 317,990	$ 30,097	$ 429,340
Liabilities								
Accounts payable	$ 21,389	$ -	$ 950	$ 184	$ -	$ -	$ -	$ 22,523
Total liabilities	21,389	-	950	184	-	-	-	22,523
Fund Balances								
Nonspendable	-	-	1,497	-	-	-	-	1,497
Restricted	3,787	45,727	6,186	-	-	317,990	30,097	403,787
Committed	-	-	-	2,125	-	-	-	2,125
Unassigned	-	-	(592)	-	-	-	-	(592)
Total fund balances	3,787	45,727	7,091	2,125	-	317,990	30,097	406,817
Total liabilities and fund balances	$ 25,176	$ 45,727	$ 8,041	$ 2,309	$ -	$ 317,990	$ 30,097	$ 429,340

CITY OF WEST WENDOVER, NEVADA
Combining Statement of Revenues, Expenditures, and Changes in Fund Balances
Nonmajor Governmental Funds
For the Year Ended June 30, 2018

	Seizure Forfeiture Fund	Court Administrative Assessment Fund	Welcome Center Fund	Wendover Will Landmark Fund	Grant Fund	Capital Projects Fund	Ad Valorem Capital Projects Fund	Total Nonmajor Governmental Funds
Revenues								
Other taxes	$ -	$ -	$ -	$ -	$ -	$ -	$ 50,279	$ 50,279
Intergovernmental	-	-	131,300	-	-	-	-	131,300
Charges for services	-	9,794	-	-	-	-	-	9,794
Miscellaneous	166	286	4,802	507	-	236,616	-	242,377
Total revenues	166	10,080	136,102	507	-	236,616	50,279	433,750
Expenditures								
Judicial	-	4,151	-	-	-	-	-	4,151
Community support	-	-	247,727	17,511	-	-	-	265,238
Capital outlay	-	-	-	-	-	6,550	-	6,550
Debt service	-	-	-	-	-	792,220	-	792,220
Total expenditures	-	4,151	247,727	17,511	-	798,770	-	1,068,159
Excess (deficiency) of revenues over (under) expenditures	166	5,929	(111,625)	(17,004)	-	(562,154)	50,279	(634,409)
Other financing sources (uses)								
Transfers in	-	-	111,700	17,100	-	608,300	-	737,100
Transfers out	-	-	-	-	-	-	(55,000)	(55,000)
Total other financing sources (uses)	-	-	111,700	17,100	-	608,300	(55,000)	682,100
Net change in fund balances	166	5,929	75	96	-	46,146	(4,721)	47,691
Fund balances, beginning of year	3,621	39,798	7,016	2,029	-	271,844	34,818	359,126
Fund balances, end of year	$ 3,787	$ 45,727	$ 7,091	$ 2,125	$ -	$ 317,990	$ 30,097	$ 406,817

CITY OF WEST WENDOVER, NEVADA
Seizure Forfeiture Fund
Schedule of Revenues, Expenditures, and Changes in Fund Balance
Budget and Actual
For the Year Ended June 30, 2018
(With Comparative Actual Amounts for the Year Ended June 30, 2017)

	Original Budget	Final Budget	Actual	Variance with Final Budget	2017
Revenues					
Miscellaneous					
Interest income	$ 100	$ 100	$ 166	$ 66	$ 65
Total revenues	100	100	166	66	65
Expenditures					
Public Safety					
Services and supplies	200	200	-	200	2,608
Total expenditures	200	200	-	200	2,608
Excess of revenues over (under) expenditures	(100)	(100)	166	266	(2,543)
Other financing sources					
Transfers in	-	-	-	-	1,800
Transfers out	-	(1,800)	-	1,800	-
Net change in fund balance	(100)	(1,900)	166	2,066	(743)
Fund balance, beginning of year	3,621	3,621	3,621	-	4,364
Fund balance, end of year	$ 3,521	$ 1,721	$ 3,787	$ 2,066	$ 3,621

CITY OF WEST WENDOVER, NEVADA
Court Administrative Assessments Fund
Schedule of Revenues, Expenditures, and Changes in Fund Balance
Budget and Actual
For the Year Ended June 30, 2018
(With Comparative Actual Amounts for the Year Ended June 30, 2017)

	Original Budget	Final Budget	Actual	Variance with Final Budget	2017
Revenues					
Charges for services					
Court assessments	$ 8,000	$ 12,500	$ 9,794	$ (2,706)	$ 13,466
Miscellaneous					
Interest	100	100	286	186	101
Total revenues	8,100	12,600	10,080	(2,520)	13,567
Expenditures					
Judicial					
Services and supplies	-	1,000	1,373	(373)	2,124
Capital outlay	8,000	8,000	2,778	5,222	-
Total expenditures	8,000	9,000	4,151	4,849	2,124
Excess of revenue and other sources over (under) expenditures	100	3,600	5,929	(7,369)	11,443
Other financing sources					
Transfers in	-	-	-	-	-
Transfers out	-	-	-	-	-
Net change in fund balance	100	3,600	5,929	(7,369)	11,443
Fund balance, beginning of year	39,798	39,798	39,798	-	28,355
Fund balance, end of year	$ 39,898	$ 43,398	$ 45,727	$ 2,329	$ 39,798

CITY OF WEST WENDOVER, NEVADA
Welcome Center Fund
Schedule of Revenues, Expenditures, and Changes in Fund Balance
Budget and Actual
For the Year Ended June 30, 2018
(With Comparative Actual Amounts for the Year Ended June 30, 2017)

	Original Budget	Final Budget	Actual	Variance with Final Budget	2017
Revenues					
Intergovernmental					
Operating grants	$ 55,000	$ 120,100	$ 43,300	$ (76,800)	$ 23,523
Elko county recreation board	88,000	88,000	88,000	-	92,000
Total intergovernmental	143,000	208,100	131,300	(76,800)	115,523
Miscellaneous					
Merchandise sales	8,000	8,000	4,802	(3,198)	4,003
Total miscellaneous	8,000	8,000	4,802	(3,198)	4,003
Total revenues	151,000	216,100	136,102	(79,998)	119,526
Expenditures					
Community support					
Salaries and wages	107,640	107,640	104,738	2,902	90,346
Employee benefits	36,360	36,360	34,018	2,342	44,895
Services and supplies	50,600	51,600	44,687	6,913	33,820
Capital outlay	70,000	80,000	64,284	15,716	42,343
Total expenditures	264,600	275,600	247,727	27,873	211,404
Excess of revenues over (under) expenditures	(113,600)	(59,500)	(111,625)	(52,125)	(91,878)
Other financing sources					
Transfers in	108,000	65,000	111,700	46,700	54,000
Transfers out	-	-	-	-	-
Net change in fund balance	(5,600)	5,500	75	(5,425)	(37,878)
Fund balance, beginning of year	7,016	7,016	7,016	-	46,894
Prior period adjustment	-	-	-	-	(2,000)
Fund balance, end of year	$ 1,416	$ 12,516	$ 7,091	$ (5,425)	$ 7,016

CITY OF WEST WENDOVER, NEVADA
Wendover Will Landmark Fund
Schedule of Revenues, Expenditures, and Changes in Fund Balance
Budget and Actual
For the Year Ended June 30, 2018
(With Comparative Actual Amounts for the Year Ended June 30, 2017)

	Original Budget	Final Budget	Actual	Variance with Final Budget	2017
Revenues					
Miscellaneous					
Donations from private sources	$ 1,000	$ 1,000	$ 390	$ (610)	$ 100
Merchandise sales	3,000	3,000	-	(3,000)	-
Interest revenue	200	200	117	(83)	297
Total revenues	4,200	4,200	507	(3,693)	397
Expenditures					
Community Support					
Services and supplies	29,000	25,000	17,511	7,489	17,097
Total expenditures	29,000	25,000	17,511	7,489	17,097
Excess of revenues over (under) expenditures	(24,800)	(20,800)	(17,004)	3,796	(16,700)
Other financing sources					
Transfers in	25,000	25,000	17,100	(7,900)	17,000
Net change in fund balance	200	4,200	96	(4,104)	300
Fund balance, beginning of year	2,029	2,029	2,029	-	1,729
Fund balance, end of year	$ 2,229	$ 6,229	$ 2,125	$ (4,104)	$ 2,029

CITY OF WEST WENDOVER, NEVADA
Grant Fund
Schedule of Revenues, Expenditures, and Changes in Fund Balance
Budget and Actual
For the Year Ended June 30, 2018
(With Comparative Actual Amounts for the Year Ended June 30, 2017)

	Original Budget	Final Budget	Actual	Variance with Final Budget	2017
Revenues					
Intergovernmental					
CDBG grants	$ -	$ -	$ -	$ -	$ -
Other grant revenue	-	-	-	-	-
Total intergovernmental	-	-	-	-	-
Total revenues	-	-	-	-	-
Expenditures					
Public works					
Capital outlay	-	-	-	-	-
Total public works	-	-	-	-	-
Total expenditures	-	-	-	-	-
Deficiency of revenues under expenditures	-	-	-	-	-
Other financing sources (uses)					
Transfers in	-	-	-	-	-
Transfers out	-	-	-	-	-
Total other financing sources and uses	-	-	-	-	-
Net change in fund balance	-	-	-	-	-
Fund balance, beginning of year	-	-	-	-	
Fund balance, end of year	$ -	$ -	$ -	$ -	$ -

CITY OF WEST WENDOVER, NEVADA
Capital Projects Fund
Schedule of Revenues, Expenditures, and Changes in Fund Balance
Budget and Actual
For the Year Ended June 30, 2018
(With Comparative Actual Amounts for the Year Ended June 30, 2017)

	Original Budget	Final Budget	Actual	Variance with Final Budget	2017
Revenues					
Intergovernmental					
Federal grants	$ -	$ -	$ -	$ -	$ 589,048
Total intergovernmental	-	-	-	-	589,048
Miscellaneous					
Interest income	-	-	1,140	1,140	1,159
Miscellaneous	2,500	2,500	2,312	(188)	10,542
Sale of capital assets	136,000	282,200	233,164	(49,036)	-
Total miscellaneous	138,500	284,700	236,616	(48,084)	11,701
Total revenues	138,500	284,700	236,616	(48,084)	600,749
Expenditures					
General government					
Capital outlay	200,000	50,000	6,550	43,450	1,743,996
Total general government	200,000	50,000	6,550	43,450	1,743,996
Debt service					
Debt service - principal	541,000	541,000	540,964	36	803,713
Debt service - interest	251,300	251,300	251,256	44	263,487
Total debt service	792,300	792,300	792,220	80	1,067,200
Total expenditures	992,300	842,300	798,770	43,530	2,811,196
Excess of revenues over (under) expenditures	(853,800)	(557,600)	(562,154)	(4,554)	(2,210,447)
Other financing sources (uses)					
Transfers in	860,000	640,000	608,300	(31,700)	1,800,803
Transfers out	-	-	-	-	-
Total other financing sources	860,000	640,000	608,300	(31,700)	1,800,803
Net change in fund balance	6,200	82,400	46,146	(36,254)	(409,644)
Fund balance, beginning of year	271,844	271,844	271,844	-	681,488
Fund balance, end of year	$ 278,044	$ 354,244	$ 317,990	$ (36,254)	$ 271,844

CITY OF WEST WENDOVER, NEVADA
Ad Valorem Capital Projects Fund
Schedule of Revenues, Expenditures, and Changes in Fund Balance
Budget and Actual
For the Year Ended June 30, 2018
(With Comparative Actual Amounts for the Year Ended June 30, 2017)

	Original Budget	Final Budget	Actual	Variance with Final Budget	2017
Revenues					
Other taxes					
Ad valorem tax	$ 40,000	$ 50,000	$ 50,279	$ 279	$ 52,057
Total revenues	40,000	50,000	50,279	279	52,057
Expenditures					
	-	-	-	-	-
Total expenditures	-	-	-	-	-
Excess of revenues over (under) expenditures	40,000	50,000	50,279	279	52,057
Other financing sources (uses)					
Transfers out	(30,000)	(55,000)	(55,000)	-	(90,000)
Net change in fund balance	10,000	(5,000)	(4,721)	279	(37,943)
Fund balance, beginning of year	34,818	34,818	34,818	-	72,761
Fund balance, end of year	$ 44,818	$ 29,818	$ 30,097	$ 279	$ 34,818

MAJOR BUSINESS-TYPE FUNDS

CITY OF WEST WENDOVER, NEVADA
Water Fund
Schedule of Revenues, Expenditures, and Changes in Net Position
Budget and Actual
For the Year Ended June 30, 2018
(With Comparative Actual Amounts for the Year Ended June 30, 2017)

	Original Budget	Final Budget	Actual	Variance with Final Budget	2017
Operating revenues					
Charges for services	$ 1,288,800	$ 1,343,200	$ 1,225,277	$ (117,923)	$ 1,205,984
Total operating revenues	1,288,800	1,343,200	1,225,277	(117,923)	1,205,984
Operating expenses					
Water purchases	587,700	602,200	518,296	83,904	477,726
Salaries and wages	186,253	186,253	197,361	(11,108)	203,081
Employee benefits	53,647	53,647	53,383	264	100,293
Services and supplies	326,000	332,300	312,598	19,702	306,199
Depreciation and amortization	125,000	140,000	139,954	46	140,852
Total operating expenses	1,278,600	1,314,400	1,221,592	92,808	1,228,151
Operating income	10,200	28,800	3,685	(25,115)	(22,167)
Nonoperating revenues (expenses)					
Interest income	116,100	121,100	119,948	(1,152)	119,376
Impact fees	20,000	20,000	16,556	(3,444)	11,823
Grant revenue	-	1,000	1,020	20	-
Miscellaneous income	20,000	20,000	13,905	(6,095)	13,630
Contributions from component unit for debt payments	-	9,000	10,584	1,584	10,497
Capital outlay	(1,000)	(1,000)	(168)	832	(768)
Interest expense	(154,700)	(154,700)	(159,011)	(4,311)	(161,870)
Total nonoperating revenues (expenses)	400	15,400	2,834	(12,566)	(7,312)
Income (loss) before transfers	10,600	44,200	6,519	(37,681)	(29,479)
Transfers:					
Transfers in	-	-	-	-	-
Transfers out	-	-	-	-	-
Change in net position	10,600	44,200	6,519	(37,681)	(29,479)
Total net position, beginning of year	3,769,041	3,769,041	3,769,041	-	3,799,520
Restatement adjustment	-	-	(32,523)	(32,523)	(1,000)
Total net position, end of year	$ 3,779,641	$ 3,813,241	$ 3,743,037	$ (70,204)	$ 3,769,041

CITY OF WEST WENDOVER, NEVADA
Sewer Fund
Schedule of Revenues, Expenditures, and Changes in Net Position
Budget and Actual
For the Year Ended June 30, 2018
(With Comparative Actual Amounts for the Year Ended June 30, 2017)

	Original Budget	Final Budget	Actual	Variance with Final Budget	2017
Operating revenues					
Charges for services:					
Charges for services	$ 1,088,900	$ 1,131,100	$ 1,107,240	$ (23,860)	$ 1,050,208
Total operating revenues	1,088,900	1,131,100	1,107,240	(23,860)	1,050,208
Operating expenses					
Salaries and wages	341,422	341,422	358,093	(16,671)	304,606
Employee benefits	96,678	96,678	131,608	(34,930)	160,556
Services and supplies	506,100	514,900	456,498	58,402	484,376
Capital outlay	32,000	32,000	12,673	19,327	18,008
Depreciation and amortization	560,000	548,300	548,215	85	560,964
Total operating expenses	1,536,200	1,533,300	1,507,087	26,213	1,528,510
Operating loss	(447,300)	(402,200)	(399,847)	2,353	(478,302)
Nonoperating revenues (expenses)					
Interest income	-	-	1,470	1,470	597
Impact fees	20,000	(20,000)	9,805	29,805	11,527
Grant revenue	-	300	340	40	-
Miscellaneous income	1,500	1,500	706	(794)	-
Interest expense	(78,900)	(78,900)	(85,088)	(6,188)	(81,114)
Total nonoperating revenues	(57,400)	(97,100)	(72,767)	24,333	(68,990)
Income (loss) before transfers	(504,700)	(499,300)	(472,614)	26,686	(547,292)
Transfers:					
Transfers in	-	-	-	-	-
Transfers out	-	-	-	-	-
Change in net position	(504,700)	(499,300)	(472,614)	26,686	(547,292)
Total net position, beginning of year	9,733,237	9,733,237	9,733,237	-	10,285,529
Restatement adjustment	-	-	(39,348)	(39,348)	(5,000)
Total net position, end of year	$ 9,733,237	$ 9,733,237	$ 9,221,275	$ (511,962)	$ 9,733,237

CITY OF WEST WENDOVER, NEVADA
Garbage / Compost Facility Fund
Schedule of Revenues, Expenditures, and Changes in Net Position
Budget and Actual
For the Year Ended June 30, 2018
(With Comparative Actual Amounts for the Year Ended June 30, 2017)

	Original Budget	Final Budget	Actual	Variance with Final Budget	2017
Operating revenues					
Charges for services	$ 1,398,100	$ 1,424,200	$ 1,432,608	$ 8,408	$ 1,365,158
Total operating revenues	1,398,100	1,424,200	1,432,608	8,408	1,365,158
Operating expenses					
Salaries and wages	383,517	383,517	349,029	34,488	309,200
Employee benefits	119,383	119,383	126,961	(7,578)	175,790
Services and supplies	255,600	278,400	219,145	59,255	225,570
Capital outlay	20,000	20,000	-	20,000	27,097
Depreciation and amortization	261,800	317,200	326,137	(8,937)	325,495
Total operating expenses	1,040,300	1,118,500	1,021,272	97,228	1,063,152
Operating income	357,800	305,700	411,336	105,636	302,006
Nonoperating revenues (expenses)					
Interest income	500	500	2,876	2,376	430
Miscellaneous income	-	-	7,616	7,616	7,878
Interest expense	(43,100)	(43,100)	(32,928)	10,172	(46,757)
Total nonoperating expenses	(42,600)	(42,600)	(22,436)	20,164	(38,449)
Income before transfers	315,200	263,100	388,900	125,800	263,557
Transfers:					
Transfers in	-	-	-	-	-
Transfers out	-	-	-	-	-
Change in net position	315,200	263,100	388,900	125,800	263,557
Total net position, beginning of year	2,830,242	2,830,242	2,830,242	-	2,571,685
Restatement adjustment	-	-	(38,442)	(38,442)	(5,000)
Total net position, end of year	$ 3,145,442	$ 3,093,342	$ 3,180,700	$ 87,358	$ 2,830,242

COMPONENT UNIT SUPPLEMENTARY SCHEDULES

CITY OF WEST WENDOVER, NEVADA
Component Unit – Johnson Springs
Statement of Net Position
For the Year Ended June 30, 2018

	Component Unit Johnson Springs
Assets	
Current assets	
Cash and investments	$ 115,024
Accounts receivable, net	57,634
Inventory	13,389
Total current assets	186,047
Noncurrent assets	
Land	18,000
Buildings	6,836,936
Improvements other than buildings	411,632
Machinery and equipment	506,351
Utility system	5,305,132
Less accumulated depreciation	(6,446,454)
Total noncurrent assets	6,631,597
Total assets	6,817,644
Deferred Outflows of Resources	
Deferred outflows related to pensions	34,296
Liabilities	
Current liabilities	
Accounts payable	29,600
Accrued liabilities	1,687
Due to primary government	2,337,645
Compensated absences	9,461
Total current liabilities	2,378,393
Noncurrent liabilities:	
Net pension liability	186,819
Total noncurrent liabilities	186,819
Total liabilities	2,565,212
Deferred Inflows of Resources	
Deferred inflows related to pensions	21,919
Net Position	
Net investment in capital assets	4,293,952
Unrestricted	(29,143)
Total net position	$ 4,264,809

CITY OF WEST WENDOVER, NEVADA
Component Unit – Johnson Springs
Schedule of Revenues, Expenditures, and Changes in Net Position
Budget and Actual
For the Year Ended June 30, 2018
(With Comparative Actual Amounts for the Year Ended June 30, 2017)

	Original Budget	Final Budget	Actual	Variance with Final Budget	2017
Operating revenues					
Charges for services	$ 670,700	$ 700,700	$ 652,108	$ (48,592)	$ 553,699
Total operating revenues	670,700	700,700	652,108	(48,592)	553,699
Operating expenses					
Water purchases	115,000	115,000	111,405	3,595	113,990
Salaries and wages	48,254	48,254	72,955	(24,701)	37,302
Employee benefits	8,746	8,746	43,015	(34,269)	(885)
Services and supplies	254,400	277,400	262,675	14,725	246,905
Depreciation and amortization	380,000	392,300	392,292	8	397,010
Total operating expenses	806,400	841,700	882,342	(40,642)	794,322
Operating loss	(135,700)	(141,000)	(230,234)	(89,234)	(240,623)
Nonoperating revenues (expenses)					
Interest income	4,000	4,000	19,001	15,001	14,002
Miscellaneous income	12,000	12,000	-	(12,000)	-
Debt paid through primary government	-	-	(10,584)	(10,584)	(10,497)
Interest expense	(111,100)	(111,100)	(109,128)	1,972	(113,949)
Total nonoperating revenues (expenses)	(95,100)	(95,100)	(100,711)	(5,611)	(110,444)
Loss before transfers	(230,800)	(236,100)	(330,945)	(94,845)	(351,067)
Transfers:					
Transfers in	-	-	-	-	-
Transfers out	-	-	-	-	-
Change in net position	(230,800)	(236,100)	(330,945)	(94,845)	(351,067)
Total net position, beginning of year	4,609,596	4,609,596	4,609,596	-	4,960,663
Restatement adjustment	-	-	(13,842)	(13,842)	
Total net position, end of year	$ 4,378,796	$ 4,373,496	$ 4,264,809	$ (108,687)	$ 4,609,596

CITY OF WEST WENDOVER, NEVADA
Component Unit – Johnson Springs
Statement of Cash Flows
June 30, 2018

	Component Unit Johnson Springs
Cash Flows From Operating Activities:	
Cash received from customers, service fees	$ 668,649
Cash paid to suppliers	(377,975)
Cash paid to employees	(93,634)
Net cash flows from operating activities	197,040
Cash Flows From Noncapital Financing Activities:	
Net component unit receipts/(payments)	(76,743)
Net cash flows from noncapital financing activities	(76,743)
Cash Flows From Capital and Related Financing Activities:	
Interest paid on capital debt	(109,128)
Net cash flows from capital and related financing activities	(109,128)
Cash Flows From Investing Activities:	
Interest income	19,001
Net change in cash and cash equivalents	30,170
Cash and investments, including restricted cash, beginning of year	84,854
Cash and Cash Equivalents, Including Restricted Cash , End of Year	$ 115,024
Reconciliation of operating income to net cash flows from operating activities:	
Operating income (loss)	$ (230,234)
Adjustments to reconcile net income (loss) to net cash from operating activities	
Depreciation/amortization	392,292
Pension expense	36,893
Employer pension contributions	(13,068)
Changes in operating assets and liabilities:	
(Increase) decrease in receivables	16,541
Increase (decrease) in accounts payable	(3,895)
Increase (decrease) in compensated absences	(1,489)
Net cash flows from operating activities	$ 197,040

OTHER COMMUNICATIONS FROM INDEPENDENT AUDITORS

This page intentionally left blank

HINTONBURDICK
CPAs & ADVISORS

Independent Auditors' Report on Internal Control Over Financial Reporting and on Compliance and Other Matters Based on an Audit of Financial Statements Performed in Accordance with *Government Auditing Standards*

The Honorable Mayor and City Council
West Wendover, Nevada

We have audited, in accordance with the auditing standards generally accepted in the United States of America and the standards applicable to financial audits contained in *Government Auditing Standards* issued by the Comptroller General of the United States, the financial statements of the governmental activities, the business-type activities, the aggregate discretely presented component units, each major fund, and the aggregate remaining fund information of City of West Wendover, Nevada, as of and for the year ended June 30, 2018, and the related notes to the financial statements, which collectively comprise City of West Wendover, Nevada 's basic financial statements and have issued our report thereon dated September 21, 2018.

Internal Control Over Financial Reporting

In planning and performing our audit of the financial statements, we considered City of West Wendover, Nevada's internal control over financial reporting (internal control) to determine the audit procedures that are appropriate in the circumstances for the purpose of expressing our opinions on the financial statements, but not for the purpose of expressing an opinion on the effectiveness of City of West Wendover, Nevada's internal control. Accordingly, we do not express an opinion on the effectiveness of City of West Wendover, Nevada's internal control.

A *deficiency in internal control* exists when the design or operation of a control does not allow management or employees, in the normal course of performing their assigned functions, to prevent, or detect and correct, misstatements on a timely basis. A *material weakness* is a deficiency, or a combination of deficiencies, in internal control, such that there is a reasonable possibility that a material misstatement of the entity's financial statements will not be prevented, or detected and corrected on a timely basis. A *significant deficiency* is a deficiency, or a combination of deficiencies, in internal control that is less severe than a material weakness, yet important enough to merit attention by those charged with governance.

Our consideration of internal control was for the limited purpose described in the preceding paragraph and was not designed to identify all deficiencies in internal control that might be material weaknesses or significant deficiencies. Given these limitations, during our audit we did not identify any deficiencies in internal control that we consider to be material weaknesses. However, material weaknesses may exist that have not been identified.

Compliance and Other Matters

As part of obtaining reasonable assurance about whether City of West Wendover, Nevada's financial statements are free from material misstatement, we performed tests of its compliance with certain provisions of laws, regulations, contracts, and grant agreements, noncompliance with which could have a direct and material effect on the determination of financial statement amounts. However, providing an opinion on compliance with those provisions was not an objective of our audit, and accordingly, we do not express such an opinion. The results of our tests disclosed no instances of noncompliance or other matters that are required to be reported under *Government Auditing Standards*.

Purpose of this Report

The purpose of this report is solely to describe the scope of our testing of internal control and compliance and the results of that testing, and not to provide an opinion on the effectiveness of the entity's internal control or on compliance. This report is an integral part of an audit performed in accordance with *Government Auditing Standards* in considering the entity's internal control and compliance. Accordingly, this communication is not suitable for any other purpose.



HintonBurdick, PLLC
St. George, Utah
September 21, 2018

HINTONBURDICK
CPAs & ADVISORS

Independent Auditor's Report on Compliance With Statutes and Administrative Code in Accordance With NRS 354.624(4) and 354.6241

The Honorable Mayor and City Council
West Wendover, NV

We have audited the basic financial statements of the City of West Wendover, Nevada for the year ended June 30, 2018, and have issued our report thereon dated September 21, 2018. Our audit also included test work on the City of West Wendover's compliance with selected requirements identified in the State of Nevada Revised Statutes (NRS) including, but not limited to, NRS section 354.624 and section 354.6241.

The management of the City of West Wendover is responsible for the City's compliance with all requirements identified above. Our responsibility is to express an opinion on compliance with those requirements based on our audit and make specific statements regarding funds established and the status of prior year findings and recommendations; accordingly, we make the following statements:

The City of West Wendover had one prior year compliance finding that was resolved during fiscal year 2018.

We noted one new instance of noncompliance during fiscal year 2018. See note 3 on page 32.

The City of West Wendover has established several funds in accordance with NRS 354.624 as follows:

Enterprise Funds:
- Water Fund
- Sewer Fund
- Garbage / Compost Facility Fund

Funds whose balance is required to be used only for a specific purpose or carried forward to the succeeding fiscal year in any designated amount:

Special Revenue Funds:
- Seizure Forfeiture Fund
- Recreation Fund
- Court Administrative Assessment Fund
- Medical Clinic Facilities Fund (combined with the General Fund for reporting)
- Grants Fund
- Welcome Center Fund
- Wendover Will Landmark Fund

Capital Projects Funds:
- Capital Projects Fund
- Ad Valorem Capital Projects Fund

The City of West Wendover appears to be using the above listed funds expressly for the purposes for which they were created and in accordance with NRS 354.624. The funds are being administered in accordance with Generally Accepted Accounting Principles and the reserves, as applicable, appear reasonable and necessary to carry out the purposes of the funds. Sources of revenues available and fund balances and net position are reflected in the individual fund financial statements.

The statutory and regulatory requirements of the funds are as follows:

Water Fund:	NRS 354.517
Sewer Fund:	NRS 354.517
Garbage / Compost Facility Fund:	NRS 354.517
Seizure Forfeiture Fund:	Resolution 1992-09
Recreation Fund:	NRS 268.798
Court Administrative Assessment Fund:	NRS 176.059
Grant Fund:	Resolution 1996-14
Welcome Center Fund:	Resolution 2001-04
Wendover Will Landmark Fund	Resolution 2005-01
Capital Projects Fund	Resolution 1997-14
Ad Valorem Capital Projects Fund	NRS 268.045

NRS 354.624 requires that a schedule of all fees imposed by the City which were subject to the provisions of NRS 354.5989 be provided. The City has not increased any fees subject to the limitations provided by NRS 354.5989; however the schedule for these fees immediately follows this report.

We conducted our audit in accordance with auditing standards generally accepted in the United States of America and *Government Auditing Standards*, issued by the Comptroller General of the United States. Those standards require that we plan and perform the audit to obtain reasonable assurance about whether material noncompliance with the requirements referred to above occurred. An audit includes examining, on a test basis, evidence about the City's compliance with those requirements. We believe that our audit provides a reasonable basis for our opinion.

In our opinion, The City of West Wendover, Nevada complied, in all material respects, with the requirements identified above for the year ended June 30, 2018.

Other Matters

The results of our auditing procedures disclosed instances of noncompliance, which are required to be reported in accordance with NRS 354.624 and 354.6241. Our finding is described in note 3 of the financial statements. Our opinion on compliance is not modified with respect to these matters.

The purpose of this report is solely to describe the scope of our testing of the applicable compliance requirements identified in the Nevada Revised Statutes (NRS) and the results of that testing based on the state requirements. Accordingly, this report is not suitable for any other purpose.

HintonBurdick, PLLC

HintonBurdick, PLLC
St. George, Utah
September 21, 2018

CITY OF WEST WENDOVER, NEVADA
Schedule of Fees Imposed Subject to the Provision of NRS 354.5989
Limitation on Fees for Business Licenses
For the Year ended June 30, 2018

Flat Fixed Fees:

Business license revenue adjusted base at June 30, 2017		20,720
Adjustment to Base:		
1. Percentage change in population of the local government	0.0%	
2. Percentage increase in the Consumer Price Index for the year ending on December 31, next preceding the year for which the limit is being calculated	2.9%	2.90%
Increase in base		601
Adjusted base at June 30, 2018		21,321
Actual revenue		16,885
Amount over (under) allowable amount		$ (4,436)

City of West Wendover	Fiscal Year															
	21-22	22-23	23-24	24-25	25-26	26-27	27-28	28-29	29-30	30-31	31-32	32-33	33-34	34-35		
Revenue																
Property Taxes	1,614,981	1,893,706	2,257,294	2,323,429	2,524,639	2,549,900	2,615,131	2,641,300	2,691,350	2,718,300	2,745,500	2,773,000	2,800,700	2,828,700	1.00%	
Licenses and Permits	1,935,264	1,951,950	2,073,697	2,002,125	2,159,415	2,001,300	2,008,239	2,021,000	1,995,900	2,005,900	2,015,900	2,026,000	2,036,100	2,048,665	0.50%	
Intergovernmental Revenue	4,422,364	4,658,630	4,983,375	5,085,703	5,372,971	5,426,700	5,528,922	5,584,200	5,668,525	5,725,200	5,782,500	5,840,300	5,923,700	5,982,900	1.00%	
Charges for Services	48,446	53,690	53,550	53,800	54,100	54,400	54,700	55,000	55,300	55,600	55,900	56,200	56,500	56,800	0.50%	
Fines and Forfeitures	49,720	40,350	44,450	44,500	44,500	44,500	44,500	44,500	44,500	44,500	44,500	44,500	44,500	44,500	0.00%	
Sale of Fixed Assets	42,300	234,000	368,000	-	-	-	-	-	-	-	-	-	-	-		
Grant Proceeds	1,046,824	501,592	5,128,863	-	-	-	-	-	-	-	-	-	-	-		
Other Revenue	**235,401**	565,570	230,400	230,400	230,400	230,400	230,400	230,400	230,400	230,400	230,400	230,400	230,400	230,400	0.00%	
Total Revenue	**9,395,300**	9,899,488	15,139,629	9,739,957	10,386,025	10,307,200	10,481,892	10,576,400	10,685,975	10,779,900	10,874,700	10,970,400	11,091,900	11,191,965		
Expenditures																
General Government																
Salaries Wages & Benefits	693,078	697,185	712,874	734,300	756,300	779,000	802,400	826,500	851,300	876,800	903,100	930,200	958,100	986,800		
Other Expenditures	477,003	520,450	623,370	642,100	654,900	668,000	681,400	695,000	708,900	723,100	737,600	752,400	767,400	782,700		
Municipal Court																
Salaries Wages & Benefits	357,659	459,204	485,361	499,900	514,900	530,300	546,200	562,600	579,500	596,900	614,800	633,200	652,200	671,800		
Other Expenditures	125,066	78,650	66,150	68,100	69,500	70,900	72,300	73,700	75,200	76,700	78,200	79,800	81,400	83,000		
Election Expense	-	5,000	-	5,200	-	5,300	-	5,400	-	5,500	-	5,600	-	5,700		
Wendover Police																
Salaries Wages & Benefits	2,001,502	2,240,531	2,129,354	2,193,200	2,259,000	2,326,800	2,396,600	2,468,500	2,542,600	2,618,900	2,697,500	2,778,400	2,861,800	2,947,700		
Other Expenditures	319,031	627,183	498,600	513,600	523,900	534,400	545,100	556,000	567,100	578,400	590,000	601,800	613,800	626,100		
Fire Department																
Salaries Wages & Benefits	669,974	718,704	719,063	740,600	762,800	785,700	809,300	833,600	858,600	884,400	910,900	938,200	966,300	995,300		
Other Expenditures	114,324	130,100	176,021	181,300	184,900	188,600	192,400	196,200	200,100	204,100	208,200	212,400	216,600	220,900		
Dispatch Center																
Salaries Wages & Benefits	466,418	542,117	580,881	598,300	616,200	634,700	653,700	673,300	693,500	714,300	735,700	757,800	780,500	803,900		
Other Expenditures	28,466	49,950	46,950	48,400	49,400	50,400	51,400	52,400	53,400	54,500	55,600	56,700	57,800	59,000		
Paved Streets																
Salaries Wages & Benefits	53,164	109,448	109,856	113,200	116,600	120,100	123,700	127,400	131,200	135,100	139,200	143,400	147,700	152,100		
Other Expenditures	156,016	181,300	282,500	291,000	296,800	302,700	308,800	315,000	321,300	327,700	334,300	341,000	347,800	354,800		
Public Works																
Salaries Wages & Benefits	327,666	394,012	395,481	407,300	419,500	432,100	445,100	458,500	472,300	486,500	501,100	516,100	531,600	547,500		
Other Expenditures	34,548	55,300	67,300	69,300	70,700	72,100	73,500	75,000	76,500	78,000	79,600	81,200	82,800	84,500		
Community Development																
Salaries Wages & Benefits	208,866	294,701	369,315	380,400	391,800	403,600	415,700	428,200	441,000	454,200	467,800	481,800	496,300	511,200		
Other Expenditures	85,734	207,700	214,700	221,100	225,500	230,000	234,600	239,300	244,100	249,000	254,000	259,100	264,300	269,600		
Public Health																
Other Expenditures	10,269	33,500	32,500	33,500	34,200	34,900	35,600	36,300	37,000	37,700	38,500	39,300	40,100	40,900		
Animal Control																
Salaries Wages & Benefits	96,917	104,915	112,448	115,800	119,300	122,900	126,600	130,400	134,300	138,300	142,400	146,700	151,100	155,600		
Other Expenditures	19,013	22,200	42,700	44,000	44,900	45,800	46,700	47,600	48,600	49,600	50,600	51,600	52,600	53,700		
Community Support																
Other Expenditures	39,148	31,000	31,000	31,000	15,000	32,000	16,000	33,000	17,000	34,000	18,000	35,000	19,000	36,000		
Library																
Other Expenditures	15,522	22,000	24,800	25,500	26,000	26,500	27,000	27,500	28,100	28,700	29,300	29,900	30,500	31,100		
CIP Fund																
Other Expenditures	1,844,895	2,137,073	20,383,455	-	-	-	-	-	-	-	-	-	-	-		
Total Expenditures	8,144,279	9,662,223	28,146,479	8,000,200	8,196,100	8,441,700	8,649,900	8,908,100	9,129,200	9,401,000	9,636,000	9,922,200	10,171,300	10,472,500		
Revenues Net of Expenditures	1,251,021	237,265	(13,006,850)	1,739,757	2,189,925	1,865,500	1,831,992	1,668,300	1,556,775	1,378,900	1,238,700	1,048,200	920,600	719,465		
Other Financing Sources (Uses)																
Current Debt Service																
Principle																
PD Vehicles	54,000	55,000	-	-	-	-	-	-	-	-	-	-	-	-	-	
Government Complex	-	-	-	-	-	-	-	-	-	-	-	-	-	-	-	
City Hall Complex	145,119	151,597	157,938	165,414	172,798	180,511	188,227	196,971	205,763	214,948	224,302	234,555	245,025	255,963	267,267	
Florence Way	187,000	195,000	199,000	206,000	213,000	-	-	-	-	-	-	-	-	-	-	
Total Principle	386,119	401,597	356,938	371,414	385,798	180,511	188,227	196,971	205,763	214,948	224,302	234,555	245,025	255,963	267,267	
Interest																
PD Vehicles	1,853	622	-	-	-	-	-	-	-	-	-	-	-	-	-	
Government Complex	-	-	-	-	-	-	-	-	-	-	-	-	-	-	-	
City Hall Complex	168,381	161,903	155,562	148,086	140,702	132,989	125,273	116,529	107,736	98,552	89,198	78,945	68,475	57,537	46,233	
Florence Way	20,487	16,170	11,718	7,142	2,407	7,142	2,407	-	-	-	-	-	-	-	-	
Interim Debenture (Estimate)	-	122,304	563,054													
Total Interest	190,721	300,999	730,334	155,228	143,109	140,131	127,680	116,529	107,736	98,552	89,198	78,945	68,475	57,537	46,233	
Total Current Debt Service	**576,840**	702,596	1,087,272	526,642	528,907	320,642	315,907	313,500	313,499	313,500	313,500	313,500	313,500	313,500	313,500	
Other Financing Sources (Uses)																
Debt Proceeds	855,253	1,032,417	12,834,069	-	-	-	-	-	-	-	-	-	-	-		
Transfers In	1,432,000	1,157,631	659,664	-	-	-	-	-	-	-	-	-	-	-		
Transfers Out	(1,572,003)	(1,595,936)	(890,139)	(233,932)	(237,441)	(241,003)	(244,618)	(248,287)	(252,011)	(255,792)	(259,628)	(263,523)	(267,476)	(271,488)		
Total Other Financing Sources (Uses)	715,250	594,112	12,603,594	(233,932)	(237,441)	(241,003)	(244,618)	(248,287)	(252,011)	(255,792)	(259,628)	(263,523)	(267,476)	(271,488)		
Summary:																
Revenue	9,395,300	9,899,488	15,139,629	9,739,957	10,386,025	10,307,200	10,481,892	10,576,400	10,685,975	10,779,900	10,874,700	10,970,400	11,091,900	11,191,965		
Salaries and Wages	(4,875,244)	(5,560,817)	(5,614,633)	(5,783,000)	(5,956,400)	(6,135,200)	(6,319,300)	(6,509,000)	(6,704,300)	(6,905,400)	(7,112,500)	(7,325,800)	(7,545,600)	(7,771,900)		
Other Expenditures	(3,269,035)	(4,101,406)	(22,531,846)	(2,217,200)	(2,239,700)	(2,306,500)	(2,330,600)	(2,399,100)	(2,424,900)	(2,495,600)	(2,523,500)	(2,596,400)	(2,625,700)	(2,700,600)		
Other Financing Sources (Uses)	715,250	594,112	12,603,594	(233,932)	(237,441)	(241,003)	(244,618)	(248,287)	(252,011)	(255,792)	(259,628)	(263,523)	(267,476)	(271,488)		
Excess (deficiency) of revenues over (under) expenditures	1,966,271	831,377	(403,256)	1,505,825	1,952,484	1,624,497	1,587,374	1,420,013	1,304,763	1,123,108	979,072	784,677	653,124	447,977		
Debt Service	576,840	702,596	1,415,448	1,235,645	1,256,043	1,047,778	1,043,043	1,040,636	1,040,599	1,040,636	1,040,636	1,040,636	1,040,636	1,040,636		
Net change in fund balance	**1,389,431**	128,781	(1,818,704)	270,180	696,441	576,719	544,331	379,377	264,164	82,472	(61,564)	(255,959)	(387,512)	(592,659)		
Fund Balance beginning of the year	4,127,794	5,595,147	5,723,928	3,905,224	4,175,404	4,871,845	5,448,564	5,992,896	6,372,273	6,636,437	6,718,909	6,657,345	6,401,386	6,013,874		
Prior Period Adjustment	77,922	-	-	-	-	-	-	-	-	-	-	-	-	-		
Fund Balance end of the year	**5,595,147**	5,723,928	3,905,224	4,175,404	4,871,845	5,448,564	5,992,896	6,372,273	6,636,437	6,718,909	6,657,345	6,401,386	6,013,874	5,421,215	79,934,447	

City of West Wendover
Statement / Forecast of Cash Flows
Combined General Fund and Capital Projects Fund

Cash Flow Analysis

	Actual 6/30/22	Estimated 6/30/23	Budgeted 6/30/24	Forecast >> 6/30/25	6/30/26	6/30/27	6/30/28	6/30/29	6/30/30	6/30/31	6/30/32	6/30/33	6/30/34	6/30/35
Cash Flows From Operating Activities														
Cash received from property taxes	1,611,742	1,893,706	2,257,294	2,323,429	2,524,639	2,549,900	2,615,131	2,641,300	2,691,350	2,718,300	2,745,500	2,773,000	2,800,700	2,828,700
Cash received from licenses	1,935,264	1,951,950	1,937,150	1,946,800	1,956,500	1,966,300	1,976,100	1,986,000	1,995,900	2,005,900	2,015,900	2,026,000	2,036,100	2,046,300
Cash received from intergovernmental revenue	4,313,034	4,658,630	4,983,375	5,085,703	5,372,971	5,426,700	5,528,922	5,584,200	5,668,525	5,725,200	5,782,500	5,840,300	5,923,700	5,982,900
Cash received from charges for services	48,446	53,690	53,550	53,800	54,100	54,400	54,700	55,000	55,300	55,600	55,900	56,200	56,500	56,800
Cash received from fines and forfeitures	49,720	40,350	44,450	44,500	44,500	44,500	44,500	44,500	44,500	44,500	44,500	44,500	44,500	44,500
Cash paid to suppliers	(1,400,275)	(1,964,333)	(2,148,391)	(2,217,200)	(2,239,700)	(2,306,500)	(2,330,600)	(2,399,100)	(2,424,900)	(2,495,600)	(2,523,500)	(2,596,400)	(2,625,700)	(2,700,600)
Cash paid to employees	(4,890,547)	(5,560,817)	(5,614,633)	(5,783,000)	(5,956,400)	(6,135,200)	(6,319,300)	(6,509,000)	(6,704,300)	(6,905,400)	(7,112,500)	(7,325,800)	(7,545,600)	(7,771,900)
Transfers to Other Funds	(140,003)	(438,305)	(230,475)	(233,932)	(237,441)	(241,003)	(244,618)	(248,287)	(252,011)	(255,792)	(259,628)	(263,523)	(267,476)	(271,488)
Net cash flows from operating activities	$ 1,527,381	$ 634,871	$ 1,282,320	$ 1,220,100	$ 1,519,169	$ 1,359,097	$ 1,324,835	$ 1,154,613	$ 1,074,363	$ 892,708	$ 748,672	$ 554,277	$ 422,724	$ 215,212
Cash Flows From Noncapital Financing Activities														
Impact fees, building permits	-	-	136,547	55,325	202,915	35,000	32,139	35,000	-	-	-	-	-	2,365
Cash received from miscellaneous sources	229,577	565,070	228,600	228,600	229,500	229,900	229,900	229,900	229,900	229,900	229,900	229,900	229,900	229,900
Cash received from ARPA Coronavirus Local Fiscal Recovery Fund	624,366	-	2,870,346	-	-	-	-	-	-	-	-	-	-	-
Transfers In	-	-	-	-	-	-	-	-	-	-	-	-	-	-
Interfud Repayment	34,440													
Net cash flows from noncapital financing activities	$ 888,383	$ 565,070	$ 3,235,493	$ 283,925	$ 432,415	$ 264,900	$ 262,039	$ 264,900	$ 229,900	$ 229,900	$ 229,900	$ 229,900	$ 229,900	$ 232,265
	10,172,424	9,899,488	30,447,330	9,739,957	10,386,025	10,307,200	10,481,892	10,576,400	10,685,975	10,779,900	10,874,700	10,970,400	11,091,900	11,191,965
	9,395,300	9,899,488	15,139,629	9,703,957	10,312,925	10,194,400	10,328,792	10,382,000	10,449,775	10,500,900	10,552,200	10,603,800	10,680,600	10,735,165
Cash Flow From Capital and Related Financing Activities	715,250	594,112	12,603,594											
Sale of property, plant, equipment	42,300	234,000	368,000	-	-	-	-	-	-	-	-	-	-	-
Grant revenue	422,458	501,592	2,258,517	-	-	-	-	-	-	-	-	-	-	-
Proceeds from long term debt	855,253	-	15,307,701	-	-	-	-	-	-	-	-	-	-	-
Principle paid on capital debt	(386,119)	(401,597)	(448,490)	(567,481)	(603,711)	(405,867)	(420,039)	(437,977)	(455,007)	(472,799)	(489,863)	(510,444)	(530,446)	(551,261)
Interest paid on capital debt	(190,721)	(300,999)	(966,958)	(668,164)	(652,332)	(641,911)	(623,004)	(602,659)	(585,592)	(567,837)	(550,773)	(530,192)	(510,190)	(489,375)
Acquisition and construction of capital assets	(1,429,415)	(2,137,073)	(20,383,455)	(100,000)	(100,000)	(100,000)	(100,000)	(100,000)	(100,000)	(100,000)	(100,000)	(100,000)	(100,000)	(100,000)
Net cash flows from capital and related financing activities	$ (686,244)	$ (2,104,077)	$ (3,864,685)	$ (1,335,645)	$ (1,356,043)	$ (1,147,778)	$ (1,143,043)	$ (1,140,636)	$ (1,140,599)	$ (1,140,636)	$ (1,140,636)	$ (1,140,636)	$ (1,140,636)	$ (1,140,636)
Cash Flows From Investing Activities														
Interest income	$ 5,824	$ 500	$ 1,800	$ 1,800	$ 900	$ 500	$ 500	$ 500	$ 500	$ 500	$ 500	$ 500	$ 500	$ 500
Net change in cash and cash equivalents	$ 1,735,344	$ (903,636)	$ 654,928	$ 170,180	$ 596,441	$ 476,719	$ 444,331	$ 279,377	$ 164,164	$ (17,528)	$ (161,564)	$ (355,959)	$ (487,512)	$ (692,659)
Cash and investments, including restricted, beginning of year	3,865,340	$ 5,600,684	$ 4,697,048	$ 5,351,976	$ 5,522,156	$ 6,118,597	$ 6,595,316	$ 7,039,648	$ 7,319,025	$ 7,483,189	$ 7,465,661	$ 7,304,097	$ 6,948,138	$ 6,460,626
Cash and Cash Equivalents, Including Restricted, End of Year	$ 5,600,684	$ 4,697,048	$ 5,351,976	$ 5,522,156	$ 6,118,597	$ 6,595,316	$ 7,039,648	$ 7,319,025	$ 7,483,189	$ 7,465,661	$ 7,304,097	$ 6,948,138	$ 6,460,626	$ 5,767,967

Balance Sheet

City of West Wendover
Balance Sheet
Combined General Fund and Capital Projects Fund

	6/30/22	6/30/23	6/30/24	6/30/25	6/30/26	6/30/27	6/30/28	6/30/29	6/30/30	6/30/31	6/30/32	6/30/33	6/30/34	6/30/35
Assets														
Cash on hand in Banks	5,286,745	4,697,048	5,351,976	5,522,156	6,118,597	6,595,316	7,039,648	7,319,025	7,483,189	7,465,661	7,304,097	6,948,138	6,460,626	5,767,967
Accounts receivable	7,909	7,949	7,989	8,028	8,069	8,109	8,149	8,190	8,231	8,272	8,314	8,355	8,397	8,439
Due from other governments - Interim Debenture	855,337													
Franchise Taxes receivable	89,798													
Leases receivable	59,276													
Inventory	46,175	29,472	29,472	29,472	29,472	29,472	29,472	29,472	29,472	29,472	29,472	29,472	29,472	29,472
Prepayments	116,559	44,308	44,308	44,308	44,308	44,308	44,308	44,308	44,308	44,308	44,308	44,308	44,308	44,308
Restricted Cash	313,940													
Total Assets	$ 6,775,739	$ 4,778,776	$ 5,433,744	$ 5,603,964	$ 6,200,445	$ 6,677,205	$ 7,121,577	$ 7,400,994	$ 7,565,199	$ 7,547,713	$ 7,386,190	$ 7,030,272	$ 6,542,802	$ 5,850,186
Liabilities														
Accounts payable	834,148	1,416,842	1,250,000	250,000	250,000	250,000	250,000	250,000	250,000	250,000	250,000	250,000	250,000	250,000
Accrued liabilities	233,029	190,000	190,000	190,000	190,000	190,000	190,000	190,000	190,000	190,000	190,000	190,000	190,000	190,000
Interfund balances	-													
Deferred revenue	54,138	50,000	50,000	50,000	50,000	50,000	50,000	50,000	50,000	50,000	50,000	50,000	50,000	50,000
Total Liabilities	$ 1,121,315	$ 1,656,842	$ 1,490,000	$ 490,000	$ 490,000	$ 490,000	$ 490,000	$ 490,000	$ 490,000	$ 490,000	$ 490,000	$ 490,000	$ 490,000	$ 490,000
Deferred Inflows of Resources														
Deferred inflows related to leases	59,276	59,276	59,276	59,276	59,276	59,276	59,276	59,276	59,276	59,276	59,276	59,276	59,276	59,276
Fund Balances														
Nonspendable														
Inventories	46,175	29,472	29,472	29,472	29,472	29,472	29,472	29,472	29,472	29,472	29,472	29,472	29,472	29,472
Prepaid Items	116,559	44,308	44,308	44,308	44,308	44,308	44,308	44,308	44,308	44,308	44,308	44,308	44,308	44,308
Capital Improvement Projects	583,274	96,164	48,935	-	-	-	-	-	-	-	-	-	-	-
Other Purposes	440	440	440	440	440	440	440	440	440	440	440	440	440	440
Committed														
Parks and othe cultural and recreation programs	405,889	448,490	567,481	603,711	405,867	420,039	437,977	455,007	472,799	489,863	510,444	530,446	551,261	571,729
Unassigned	4,442,811	2,443,785	3,193,832	4,376,758	5,171,083	5,633,670	6,060,104	6,322,492	6,468,905	6,434,354	6,252,251	5,876,331	5,368,046	4,654,962
Total Fund Balances	5,595,147	3,062,658	3,884,468	5,054,688	5,651,170	6,127,929	6,572,301	6,851,718	7,015,923	6,998,437	6,836,914	6,480,996	5,993,526	5,300,910
Total Liabilities and fund balances	6,775,738	4,778,777	5,433,744	5,603,964	6,200,446	6,677,205	7,121,577	7,400,994	7,565,199	7,547,713	7,386,190	7,030,272	6,542,802	5,850,186

FINAL BUDGET



2023-2024

FINAL BUDGET



2023-2024

CITY OF WEST WENDOVER
BUDGET FISCAL YEAR 2023-2024

DESCRIPTION	PAGE
TRANSMITTAL LETTER	1
BUDGET MESSAGE	2-3
SCHEDULE S-1 SUMMARY	4
SCHEDULE S-1 SUMMARY CONTINUED	5
SCHEDULE S-2 STATISTICAL DATA	6
SCHEDULE S-3 PROPERTY TAX RATE	7
SCHEDULE A GOVERNMENTAL FUND TYPES-REVENUE	8
SCHEDULE A-1 GOVERNMENTAL FUND TYPES-EXPENDITURES	9
SCHEDULE A-2 PROPRIETARY AND NONEXPENDABLE TRUST FUNDS	10
SCHEDULE B-8 - GENERAL FUND-REVENUE	11
SCHEDULE B-9 - GENERAL FUND-REVENUE SUMMARY	12
SCHEDULE B-10 - GENERAL FUND-EXPENSES - GENERAL GOVERNMENT	13
SCHEDULE B-10 - GENERAL FUND-EXPENSES - JUDICIAL	14
SCHEDULE B-10 - GENERAL FUND-EXPENSES - PUBLIC SAFETY	15
SCHEDULE B-10 - GENERAL FUND-EXPENSES - PUBLIC WORKS	16
SCHEDULE B-10 - GENERAL FUND-EXPENSES - COMMUNITY DEVELOPMENT	17
SCHEDULE B-10 - GENERAL FUND-EXPENSES - HEALTH	18
SCHEDULE B-10 - GENERAL FUND-EXPENSES - COMMUNITY SUPPORT	19
SCHEDULE B-10 - GENERAL FUND-EXPENSES - CULTURE & RECREATION	20
SCHEDULE B-10 - GENERAL FUND-EXPENSES - DEBT SERVICE	21
SCHEDULE B-11 - GENERAL FUND-EXPENSES SUMMARY	22
SCHEDULE B-14 - SPECIAL REVENUE - SEIZURE/ FORFEITURE	23
SCHEDULE B-14 - SPECIAL REVENUE - RECREATION FUND	24
SCHEDULE B-14 - SPECIAL REVENUE - COURT ADMIN. ASSESSMENTS	25
SCHEDULE B-14 - SPECIAL REVENUE - GRANTS FUND	26
SCHEDULE B-14 - SPECIAL REVENUE - WELCOME CENTER FUND	27
SCHEDULE B-14 - SPECIAL REVENUE - WENDOVER WILL LANDMARK FUND	28
SCHEDULE B-14 - SPECIAL REVENUE - COMMUNITY SUPPORT/LOCAL SCHOOLS	29
SCHEDULE B-14 - CAPITAL PROJECTS - AD VALOREM CAPITAL PROJECTS	30
SCHEDULE B-14 - CAPITAL PROJECTS - CAPITAL PROJECTS	31
SCHEDULE B-14 - EXPENDABLE TRUST-UNEMPLOYMENT INSURANCE RESERVE	32

CITY OF WEST WENDOVER
BUDGET FISCAL YEAR 2023-2024

DESCRIPTION	PAGE
INDEX PAGE 2	
SCHEDULE F-1 - REVENUES, EXPENSES AND NET INCOME - WATER FUND	33
SCHEDULE F-2 - STATEMENT OF CASH FLOWS - WATER FUND	34
SCHEDULE F-1 - REVENUES, EXPENSES AND NET INCOME - SEWER FUND	35
SCHEDULE F-2 - STATEMENT OF CASH FLOWS - SEWER FUND	36
SCHEDULE F-1 - REVENUES, EXPENSES AND NET INCOME - COMBINED GARBAGE/COMPOST FUND	37
SCHEDULE F-2 - STATEMENT OF CASH FLOWS - COMBINED GARBAGE/COMPOST FUND	38
SCHEDULE F-1 - REVENUES, EXPENSES AND NET INCOME - JOHNSON SPRINGS TRANSMISSION SYSTEM FUND	39
SCHEDULE F-2 - STATEMENT OF CASH FLOWS - JOHNSON SPRINGS TRANSMISSION SYSTEM FUND	40
SCHEDULE F-1 - REVENUES, EXPENSES AND NET INCOME - HEALTH INSURANCE FUND	41
SCHEDULE F-2 - STATEMENT OF CASH FLOWS - HEALTH INSURANCE FUND	42
SCHEDULE C-1 - INDEBTEDNESS - CAPITAL PROJECTS FUND	43
SCHEDULE C-1 - INDEBTEDNESS - WATER FUND	44
SCHEDULE C-1 - INDEBTEDNESS - SEWER FUND	45
SCHEDULE C-1 - INDEBTEDNESS - COMBINED COMPOST / GARBAGE FUND	46
SCHEDULE C-1 - INDEBTEDNESS - JOHNSON SPRINGS TRANSMISSION SYSTEM FUND	47
SCHEDULE T - TRANSFERS - GENERAL & SPECIAL REVENUE FUNDS	48
SCHEDULE T - TRANSFERS - CAPITAL PROJECTS FUND	49
SCHEDULE T - TRANSFERS - TOTALS	50
FORM 31 - SCHEDULE OF EXISTING CONTRACTS	51
FORM 32 - SCHEDULE OF PRIVATIZATION CONTRACTS	52

CITY OF WEST WENDOVER

P.O. Box 2825 • 1111 N. Gene L. Jones Way • West Wendover, NV 89883
Office (775) 664-3081 Fax (775) 664-3720

Nevada Department of Taxation
1550 College Parkway, Suite 115
Carson City, NV 89706-7937

The City of West Wendover herewith submits the (TENTATIVE) --- (FINAL) budget for the fiscal year ending June 30, 2024

This budget contains **1** funds, including Debt Service, requiring property tax revenues totaling $ **2,031,678**

The property tax rates computed herein are based on preliminary data. If the final state computed revenue limitation permits, the tax rate will be increased by an amount not to exceed 1%. _____ If the final computation requires, the tax rate will be lowered.

This budget contains **10** governmental fund types with estimated expenditures of $ **32,097,593** and **5** proprietary funds with estimated expenses of $ **6,736,501**

Copies of this budget have been filed for public record and inspection in the offices enumerated in NRS 354.596 (Local Government Budget and Finance Act).

CERTIFICATION

I Alina Ceballos
(Printed Name)
City Chief Financial Officer
(Title)
certify that all applicable funds and financial operations of this Local Government are listed herein

Signed

Dated: 5/16/2023

Phone: 775-664-3081

APPROVED BY THE GOVERNING BOARD
Only necessary for **FINAL** Budget
(Signature by Docusign is acceptable)

SCHEDULED PUBLIC HEARING:
(Must be held from May 15, 2023 to May 31, 2023)

Date and Time May 16, 2023 at 7:00 pm

Publication Date Thursday, May 4, 2023

Place: West Wendover City Hall, Council Chambers #137

"The City of West Wendover is an equal opportunity provider."

BUDGET MESSAGE 2023-2024

CITY OF WEST WENDOVER

The fiscal year 2023-2024 budget for the City of West Wendover includes an ending general fund balance that is 88.95% of fiscal year (FY) 2021-2022 actual general fund expenditures or 72.82% of FY2023-2024 projected budget general fund expenditures. The City anticipates transferring $609,664 from the general to the capital projects fund, $50,000 from the Ad-Valorem fund to the capital projects fund, and a total of $280,475 from the general fund to other funds for fiscal year 2023-2024.

West Wendover's economy is primarily tourism-based, making the city subject to economic fluctuations as consumers spend their discretionary income. Therefore, the City of West Wendover's governing council and city management have adopted a conservative budget philosophy, allowing the fund balances to increase in prosperous years, and conservatively utilizing the fund balances as needed in other years. The governing council and city management uses this conservative budgeting approach when estimating revenues, and expenditures.

In the general fund, from current fiscal year 2022-2023 ending projections, the fiscal year 2023-2024 budget reflects a 7.3% increase in property taxes due to the city increasing its property tax rate to 1.3514 in fiscal year 2022-2023. This budget also reflects a 5.6% decrease in licenses and permits, a 0.3% decrease in charges for services, but a 10.2% increase in fines and forfeitures, and a 12.9% increase in other revenue. Intergovernmental revenue reflects an 2.2% increase in the general fund, a 4.7% increase in room taxes in the recreation board fund, and increases in all of the proprietary funds for water, sewer and compost utilities.

The City is now moving forward on projects that were delayed due to the pandemic, including the construction of the City's Downtown Infrastructure, Phase 1 project, and the new West Wendover Fire Station/Emergency Operations Center (EOC) project. Unfortunately, due to supply chain issues and inflation the planned construction of the Community/Recreation Center, which will facilitate the continued development of the city, has been delayed.

The cannabis retail facility, Deep Roots Harvest, continues to have a very robust business and are in the final stages of plan approval for their cultivation/production facility which will be located adjacent the retail facility. Additionally, Vertical Horizon LLC is nearing completion of their cannabis cultivation/production facility also on Industrial Way. Both of these cultivation/production facilities are planned to be open fall of 2023. These projects are part of the City's continued efforts to capitalize on its Industrial Park properties.

The City continues to see commercial retail development occur including the completion of a new multi-million-dollar Maverik C-store Truck Stop which is located on the north side of I-80 at, Exit 410. Additionally, in this same area, a multi-million-dollar TA Travel Center is now ready to begin construction. This project includes a truck stop/fueling facility with a large truck parking area as well as a 15,000 sqft C-store along with two Quick Service Restaurants (QSR's) which are KFC and Dell Taco. The project also includes a separate auto fueling island. Along with the TA project, an additional retail food business, Black Bear Diner, will be opening just north of the existing Maverik. This project is also ready to begin construction. All these new commercial additions will be complete by mid-2024 and will add an additional 250 construction jobs and an additional 75 long-term jobs to the community.

The Port of West Wendover, which is a long-term mixed use industrial/aeronautical project and part of the City's diversification strategic plan continues to proceed forward. The project includes the acquisition (at no cost) of an initial 6,000 acres of property which was part of the former the Wendover Airfield and Bombing and Gunnery Range of World War II. The Air Force has relinquished said property back to the Department of the Interior/Bureau of Land Management (BLM) and the BLM has completed their environmental assessment (EA) process and is now completing the Cadastral Survey work to initiate a land patent on the first phase which will be just over 4,000 acres. The land patent is expected to be issued in early 2024.

The City continues to see modest permit issuance for new residential construction as available housing inventory has decreased since the beginning of 2020. An 88-unit condominium project is currently in the plan approval process and is associated with the Maverick Gaming operations residential developments. This project is expected to complete plan approval process by the fall of 2023 with construction to follow.

Our outlook at the City long-term remains positive and optimistic. The enthusiasm associated with the recent and planned growth of our City is shared not only by our City Officials, but our citizens as well. We continue to feel that our community's future is full of promise and look forward to a better national and state economy that will have a positive effect on our community.

Budget Summary for **City of West Wendover**
Schedule S-1

REVENUES	GOVERNMENTAL FUND TYPES AND EXPENDABLE TRUST FUNDS				
	ACTUAL PRIOR YEAR 06/30/22 (1)	ESTIMATED CURRENT YEAR 06/30/23 (2)	BUDGET YEAR 06/30/24 (3)	PROPRIETARY FUNDS BUDGET YEAR 06/30/24 (4)	TOTAL (MEMO ONLY) COLUMNS 3+4 (5)
Property Taxes	$ 1,614,981	$ 1,893,706	$ 2,031,678	$ -	$ 2,031,678
Other Taxes	1,967,604	1,700,000	1,780,000		$ 1,780,000
Licenses and Permits	1,935,264	1,951,950	1,937,150		$ 1,937,150
Intergovernmental Resources	6,120,756	8,445,393	10,414,337		$ 10,414,337
Charges for Services	48,446	53,690	53,550	6,428,521	$ 6,482,071
Fines and Forfeits	55,453	48,850	51,590		$ 51,590
Miscellaneous	287,726	638,570	303,260	383,694	$ 686,954
TOTAL REVENUES	12,030,231	14,732,159	16,571,565	6,812,215	23,383,780
EXPENDITURES-EXPENSES					
General Government	3,035,054	6,748,054	22,145,698		22,145,698
Judicial	484,654	542,854	559,012		559,012
Public Safety	3,599,716	4,308,585	4,150,869		4,150,869
Public Works	571,395	740,060	896,937		896,937
Community Development	557,157	828,935	817,742		817,742
Health	155,400	246,120	281,896		281,896
Welfare					-
Culture and Recreation	2,389,834	1,722,000	1,804,800		1,804,800
Community Support	39,148	31,000	31,000		31,000
Intergovernmental Expenditures					-
Contingencies					-
Utility Enterprises				6,602,009	6,602,009
Hospitals					-
Transit Systems					-
Airports					-
Other Enterprises					-
Debt Service - Principal	387,972	402,219	442,681		442,681
Interest Cost	188,868	300,377	966,958	134,492	1,101,450
TOTAL EXPENDITURES-EXPENSES	11,409,198	15,870,204	32,097,593	6,736,501	38,834,094
Excess of Revenues over (under) Expenditures-Expenses	621,032	(1,138,045)	(15,526,028)	75,714	(15,450,314)

Budget Summary for **City of West Wendover**
Schedule S-1

	GOVERNMENTAL FUND TYPES AND EXPENDABLE TRUST FUNDS				
	ACTUAL PRIOR YEAR 06/30/22 (1)	ESTIMATED CURRENT YEAR 06/30/23 (2)	BUDGET YEAR 06/30/24 (3)	PROPRIETARY FUNDS BUDGET YEAR 06/30/24 (4)	TOTAL (MEMO ONLY) COLUMNS 3+4 (5)
OTHER FINANCING SOURCES (USES):					
Proceeds of Long-term Debt	855,253	1,032,417	15,675,823	-	15,675,823
Sales of General Fixed Assets	42,300	234,000	368,000	-	368,000
					-
Operating Transfers (in)	1,633,311	1,645,936	940,139	-	940,139
Operating Transfers (out)	(1,633,311)	(1,645,936)	(940,139)	-	(940,139)
TOTAL OTHER FINANCING SOURCES (USES)	897,553	1,266,417	16,043,823	-	16,043,823
Excess of Revenues and Other Sources over (under) Expenditures and Other Uses **(Net Income)**	1,518,585	128,372	517,795	75,714	XXXXXXXXXXXXX
FUND BALANCE JULY 1, BEGINNING OF YEAR	4,435,703	6,032,210	6,160,582	XXXXXXXXXXXXX	XXXXXXXXXXXXX
Prior Period Adjustments	77,922			XXXXXXXXXXXXX	XXXXXXXXXXXXX
Residual Equity Transfers	-			XXXXXXXXXXXXX	XXXXXXXXXXXXX
FUND BALANCE JUNE 30, END OF YEAR				XXXXXXXXXXXXX	XXXXXXXXXXXXX
TOTAL ENDING FUND BALANCE	6,032,210	6,160,582	6,678,378	XXXXXXXXXXXXX	XXXXXXXXXXXXX

FULL TIME EQUIVALENT EMPLOYEES BY FUNCTION

	ACTUAL PRIOR YEAR YEAR 06/30/22	ESTIMATED CURRENT YEAR YEAR 06/30/23	BUDGET YEAR YEAR 06/30/24
General Government	9.6	9.4	9.3
Judicial	5.9	6.1	6.0
Public Safety	28.3	28.2	28.8
Public Works	5.6	5.7	5.7
Sanitation	-	-	-
Health	1.0	1.0	1.0
Welfare	-	-	-
Culture and Recreation	-	-	-
Community Support	1.5	0.8	0.5
TOTAL GENERAL GOVERNMENT	52.0	51.3	51.4
Utilities	11.7	12.1	12.0
Hospitals	-	-	-
Transit Systems	-	-	-
Airports	-	-	-
Other	-	-	-
TOTAL	63.7	63.4	63.3

POPULATION (AS OF JULY 1)	4,535	4,452	4,464
SOURCE OF POPULATION ESTIMATE*	State Budget Projections	State Budget Projections	State Budget Projections
Assessed Valuation (Secured and Unsecured Only)	143,601,734	145,789,932	165,181,645
Net Proceeds of Mines			
TOTAL ASSESSED VALUE	143,601,734	145,789,932	165,181,645
TAX RATE			
General Fund	1.1514	1.3514	1.3514
Special Revenue Funds			
Capital Projects Funds			
Debt Service Funds			
Enterprise Fund			
Other			
TOTAL TAX RATE	1.1514	1.3514	1.3514

*** Use the population certified by the state in March each year. Small districts may use a number developed per the instructions (page 6) or the best information available.**

City of West Wendover
(Local Government)

SCHEDULE S-2 - STATISTICAL DATA

PROPERTY TAX RATE AND REVENUE RECONCILIATION Fiscal Year 2023-2024

	(1) ALLOWED TAX RATE	(2) ASSESSED VALUATION	(3) ALLOWED AD VALOREM REVENUE [(1) X (2)/100]	(4) TAX RATE LEVIED	(5) TOTAL AD VALOREM REVENUE WITH NO CAP [(2, line A)X(4)/100]	(6) AD VALOREM TAX ABATEMENT [(5)-(7)]	(7) AD VALOREM REVENUE WITH CAP
OPERATING RATE: A. PROPERTY TAX Subject to Revenue Limitations	3.4977	165,181,645	5,777,558	1.3514	2,232,265	200,587	2,031,678
B. PROPERTY TAX Outside Revenue Limitations: Net Proceeds of Mines							
VOTER APPROVED: C. Voter Approved Overrides							
LEGISLATIVE OVERRIDES D. Accident Indigent (NRS 428.185)							
E. Indigent (NRS 428.285)							
F. Capital Acquisition (NRS 354.59815)							
G. Youth Services Levy (NRS 62B.150, 62B.160)							
H. Legislative Overrides							
I. SCCRT Loss (NRS 354.59813)							
J. Other:							
K. Other:							
L. SUBTOTAL LEGISLATIVE OVERRIDES							
M. **SUBTOTAL A, C, L**	**3.4977**	**165,181,645**	**5,777,558**	**1.3514**	**2,232,265**	**200,587**	**2,031,678**
N. Debt							
O. **TOTAL M AND N**	**3.4977**	**165,181,645**	**5,777,558**	**1.3514**	**2,232,265**	**200,587**	**2,031,678**

City of West Wendover
(Local Government)
SCHEDULE S-3 - PROPERTY TAX RATE
AND REVENUE RECONCILIATION

The Allowed Revenue required for column 3 can be obtained from the March 15 Final Revenue Projections or manually calculated. If an entity chooses to budget for an amount in column 5 which is lower or higher than the amount produced by the formula, please attach an explanation.

SCHEDULE A - ESTIMATED REVENUES & OTHER RESOURCES - GOVERNMENTAL FUND TYPES, EXPENDABLE TRUST FUNDS & TAX SUPPORTED PROPRIETARY FUND TYPES

Budget For Fiscal Year Ending June 30, 2024

Budget Summary for **City of West Wendover**
(Local Government)

GOVERNMENTAL FUNDS AND EXPENDABLE TRUST FUNDS FUND NAME	BEGINNING FUND BALANCES (1)	CONSOLIDATED TAX REVENUE (2)	PROPERTY TAX REQUIRED (3)	TAX RATE (4)	OTHER REVENUE (5)	OTHER FINANCING SOURCES OTHER THAN TRANSFERS IN (6)	OPERATING TRANSFERS IN (7)	TOTAL (8)
General	5,135,477	3,725,900	2,031,678	1.3514	3,413,380	-	-	14,306,435
Seizure / Forfeiture	3,787				-	-	-	3,787
Recreation	260,624				1,780,000	-	-	2,040,624
Court Administrative Assessments	73,661				7,500	-	-	81,161
Community Support/Local Schools	10				-	-	94,248	94,258
Grant	-				376,000	-	50,000	426,000
Welcome Center	31,911				97,500	-	136,227	265,638
Wendover Will Landmark	17,712				-	-	-	17,712
Ad Valorem Capital Projects	54,125				50,000	-	-	104,125
Capital Projects	583,275				5,089,607	16,043,823	659,664	22,376,369
DEBT SERVICE								
Subtotal Governmental Fund Types, Expendable Trust Funds	6,160,582	3,725,900	2,031,678		10,813,987	16,043,823	940,139	39,716,109
PROPRIETARY FUNDS								
	XXXXXXXXXX				XXXXXXXXX	XXXXXXXXXXX	XXXXXXXXXXX	XXXXXXXXXXX
	XXXXXXXXXX				XXXXXXXXX	XXXXXXXXXXX	XXXXXXXXXXX	XXXXXXXXXXX
	XXXXXXXXXX				XXXXXXXXX	XXXXXXXXXXX	XXXXXXXXXXX	XXXXXXXXXXX
	XXXXXXXXXX				XXXXXXXXX	XXXXXXXXXXX	XXXXXXXXXXX	XXXXXXXXXXX
	XXXXXXXXXX				XXXXXXXXX	XXXXXXXXXXX	XXXXXXXXXXX	XXXXXXXXXXX
Subtotal Proprietary Funds	XXXXXXXXXX				XXXXXXXXX	XXXXXXXXXXX	XXXXXXXXXXX	XXXXXXXXXXX
TOTAL ALL FUNDS	XXXXXXXXXX				XXXXXXXXX	XXXXXXXXXXX	XXXXXXXXXXX	XXXXXXXXXXX

SCHEDULE A-1 ESTIMATED EXPENDITURES AND OTHER FINANCING USES

Budget For Fiscal Year Ending June 30, 2024

Budget Summary for **City of West Wendover**
(Local Government)

GOVERNMENTAL FUNDS AND EXPENDABLE TRUST FUNDS FUND NAME	*	SALARIES AND WAGES (1)	EMPLOYEE BENEFITS (2)	SERVICES, SUPPLIES AND OTHER CHARGES ** (3)	CAPITAL OUTLAY *** (4)	CONTINGENCIES AND USES OTHER THAN OPERATING TRANSFERS OUT (5)	OPERATING TRANSFERS OUT (6)	ENDING FUND BALANCES (7)	TOTAL (8)
General	-	3,507,275	2,153,279	1,844,770	257,700		890,139	5,653,272	14,306,435
Seizure / Forfeiture	R			-			-	3,787	3,787
Recreation	R			1,780,000			-	260,624	2,040,624
Court Administrative Assessments	R			7,500			-	73,661	81,161
Grant	R			-	426,000		-	-	426,000
Welcome Center	R	97,077	29,150	107,500	-		-	31,911	265,638
Wendover Will Landmark	R			-			-	17,712	17,712
Community Support/Local Schools	R			94,248	-		-	10	94,258
Ad Valorem Capital Projects	C			-			50,000	54,125	104,125
Capital Projects	C			1,409,639	20,383,455		-	583,275	22,376,369
TOTAL GOVERNMENTAL FUND TYPES AND EXPENDABLE TRUST FUNDS		3,604,352	2,182,429	5,243,657	21,067,155	-	940,139	6,678,378	39,716,109

* FUND TYPES: R - Special Revenue
C - Capital Projects
D - Debt Service
T - Expendable Trust

** Include Debt Service Requirements in this column

***** Capital Outlay must agree with CIP.**

Page: 9
Schedule A-1

SCHEDULE A-2 PROPRIETARY AND NONEXPENDABLE TRUST FUNDS

Budget For Fiscal Year Ending June 30, 2024

Budget Summary for **City of West Wendover**
(Local Government)

FUND NAME	*	OPERATING REVENUES (1)	OPERATING EXPENSES (2) **	NONOPERATING REVENUES (3)	NONOPERATING EXPENSES (4)	OPERATING TRANSFERS IN (5)	OPERATING TRANSFERS OUT(6)	NET INCOME (7)
Water	E	1,629,100	1,662,251	123,951	58,349	-	-	32,451
Sewer	E	1,366,800	1,399,810	94,000	60,670	-	-	320
Combined Garbage / Compost	E	1,581,900	1,450,645	25,900	4,889	-	-	152,266
Johnson Springs Transmission System	E	807,500	959,143	97,071	54,751	-	-	(109,323)
Health Insurance	I	1,043,221	1,085,993	42,772	-	-	-	-
TOTAL		6,428,521	6,557,842	383,694	178,659	-	-	75,714

* FUND TYPES: E - Enterprise
I - Internal Service
N - Nonexpendable Trust

** Include Depreciation

REVENUES	(1) ACTUAL PRIOR YEAR ENDING 6/30/2022	(2) ESTIMATED CURRENT YEAR ENDING 6/30/2023	(3) BUDGET YEAR ENDING 06/30/24 TENTATIVE APPROVED	(4) BUDGET YEAR ENDING 06/30/24 FINAL APPROVED
Property Taxes				
Real Property Taxes	1,335,220	1,585,979	1,701,530	1,701,530
Personal Property Taxes	256,913	284,056	304,752	304,752
Central Assessments	22,848	23,671	25,396	25,396
Subtotal	**1,614,981**	**1,893,706**	**2,031,678**	**2,031,678**
Licenses and Permits				
Business License	17,500	17,000	18,500	18,500
Alcohol Beverage License	240	150	150	150
City Gaming Taxes	212,598	207,000	212,900	212,900
Police & Protective - SOB License	-	-	-	-
Marijuana Origination Fee	-	100,000	40,000	40,000
Marijuana City 3% Excise Tax	942,477	900,000	960,000	960,000
Special Permits and Fees	1,555	1,500	1,500	1,500
Franchise Taxes	393,399	380,000	400,000	400,000
Right-of-Way Toll	256,628	265,200	253,000	253,000
Bldg Structure License	109,846	80,000	30,000	50,000
Animal License	936	1,000	1,000	1,000
Carline Taxes	86	100	100	100
Subtotal	**1,935,264**	**1,951,950**	**1,917,150**	**1,937,150**
Intergovernmental Revenue				
State Consolidated Revenue	3,431,646	3,564,890	3,725,900	3,725,900
State Marijuna Distribution	4,560	4,560	4,580	4,580
Motor Vehicle Fuel Tax 1.75	31,561	36,150	38,580	38,580
Motor Vehicle Fuel Tax 2.35	48,116	49,480	49,480	49,480
County Optional Road Tax 4	26,487	27,640	26,640	26,640
RTC Funds	187,000	199,000	114,000	180,000
County Infrastructure Tax	75,591	75,000	75,000	75,000
Special Grant Revenue - SLFRF	621,866	-	-	-
Grant Revenue - Police Department	110,880	115,000	15,000	15,000
Grant Revenue - Fire Department	43,805	24,417	26,055	26,056
Grant Revenue - Court	64,762	-	-	-
Justice Court Reimbursement	179,125	261,910	254,294	254,294
County Gaming Tax	438,278	440,000	480,000	480,000
Subtotal	**5,263,676**	**4,798,047**	**4,809,529**	**4,875,530**
Charges for Services				
Admin Assessments	-	1,900	1,260	1,260
Zoning & Subdivision Fees	-	-	-	-
Special Police Services	926	1,200	1,200	1,200
Fingerprints/Photographs	15,629	16,000	16,000	16,000
Special Fire Protection Services	9,873	10,000	10,000	10,000
Miscellaneous Public Works Revenue	-	900	900	900
Miscellaneous Paved Streets Revenue	11,558	14,606	14,606	14,606
Animal Shelter Fees	2,876	1,500	2,000	2,000
Dispatch Fees	7,584	7,584	7,584	7,584
Subtotal	**48,446**	**53,690**	**53,550**	**53,550**
Fines and Forfeits	**49,720**	**40,350**	**44,450**	44,450
Miscellaneous				
Interest Revenue	5,700	358,000	15,000	15,000
Miscellaneous Revenue	(1,450)	9,070	7,500	2,500
Wendover Will Merch Sales	-	-	6,000	6,000
Cash Over/(Short)	-	-	-	-
Donations from Private Sources	173,100	166,000	166,000	166,000
Rents and Royalties	27,920	29,500	39,100	39,100
Subtotal	**205,270**	**562,570**	**233,600**	**228,600**
TOTAL REVENUES	9,117,358	9,300,313	9,089,957	9,170,958

REVENUES	(1) ACTUAL PRIOR YEAR ENDING 6/30/2022	(2) ESTIMATED CURRENT YEAR ENDING 6/30/2023	(3) BUDGET YEAR ENDING 06/30/24 TENTATIVE APPROVED	(4) BUDGET YEAR ENDING 06/30/24 FINAL APPROVED
Property Taxes	1,614,981	1,893,706	2,031,678	2,031,678
Licenses and Permits	1,935,264	1,951,950	1,917,150	1,937,150
Intergovernmental Resources	5,263,676	4,798,047	4,809,529	4,875,530
Charges for Services	48,446	53,690	53,550	53,550
Fines and Forfeits	49,720	40,350	44,450	44,450
Miscellaneous	205,270	562,570	233,600	228,600
SUBTOTAL REVENUE ALL SOURCES	9,117,358	9,300,313	9,089,957	9,170,958
OTHER FINANCING SOURCES				
Transfers In (Schedule T)	-	-	-	
Proceeds of Long-term Debt				
Police Vehicles Medium Term Financing	-	-	-	-
SUBTOTAL OTHER FINANCING SOURCES	-	-	-	-
BEGINNING FUND BALANCE	3,743,833	5,011,872	5,135,477	5,135,477
Prior Period Adjustments	77,922	-	-	-
Residual Equity Transfers	-	-	-	-
TOTAL BEGINNING FUND BALANCE	3,821,755	5,011,872	5,135,477	5,135,477
TOTAL AVAILABLE RESOURCES	12,939,113	14,312,185	14,225,434	14,306,435

EXPENDITURES BY FUNCTION AND ACTIVITY	(1) ACTUAL PRIOR YEAR ENDING 6/30/2022	(2) ESTIMATED CURRENT YEAR ENDING 6/30/2023	(3) BUDGET YEAR ENDING 06/30/24 TENTATIVE APPROVED	(4) BUDGET YEAR ENDING 06/30/24 FINAL APPROVED
General Government				
Administration				
Salaries and Wages	474,327	469,092	462,693	462,693
Employee Benefits	218,751	228,093	250,180	250,180
Services and Supplies	477,003	514,950	597,870	617,870
Capital Outlay	-	5,500	5,500	5,500
Subtotal	1,170,081	1,217,635	1,316,243	1,336,243
Elections				
Services and Supplies	-	5,000	-	-
Subtotal	-	5,000	-	-
Total Function Activities				
Salaries and Wages	474,327	469,092	462,693	462,693
Employee Benefits	218,751	228,093	250,180	250,180
Services and Supplies	477,003	519,950	597,870	617,870
Capital Outlay	-	5,500	5,500	5,500
FUNCTION SUBTOTAL	1,170,081	1,222,635	1,316,243	1,336,243

City of West Wendover

(Local Government)

SCHEDULE B - GENERAL FUND

FUNCTION **General Government**

EXPENDITURES BY FUNCTION AND ACTIVITY	(1) ACTUAL PRIOR YEAR ENDING 6/30/2022	(2) ESTIMATED CURRENT YEAR ENDING 6/30/2023	(3) BUDGET YEAR ENDING 06/30/24 TENTATIVE APPROVED	(4) BUDGET YEAR ENDING 06/30/24 FINAL APPROVED
Municipal Court				
Salaries and Wages	233,909	286,589	309,947	309,947
Employee Benefits	123,750	172,615	175,415	175,415
Services and Supplies	60,303	78,650	66,150	66,150
Capital Outlay	64,762	-	-	-
Total Function Activities	233,909	286,589	309,947	309,947
Salaries and Wages	123,750	172,615	175,415	175,415
Employee Benefits	60,303	78,650	66,150	66,150
Services and Supplies	64,762	-	-	-
Capital Outlay	-	-	-	-
FUNCTION SUBTOTAL	482,724	537,854	551,512	551,512

City of West Wendover

(Local Government)

SCHEDULE B - GENERAL FUND

FUNCTION **Judicial**

EXPENDITURES BY FUNCTION AND ACTIVITY	(1) ACTUAL PRIOR YEAR ENDING 6/30/2022	(2) ESTIMATED CURRENT YEAR ENDING 6/30/2023	(3) BUDGET YEAR ENDING 06/30/24 TENTATIVE APPROVED	(4) BUDGET YEAR ENDING 06/30/24 FINAL APPROVED
Public Safety				
Police Department				
Salaries and Wages	1,236,980	1,383,994	1,259,320	1,259,320
Employee Benefits	764,521	856,537	870,034	870,034
Services and Supplies	303,313	303,799	314,400	314,400
Capital Outlay	15,719	323,384	184,200	184,200
Subtotal	2,320,533	2,867,714	2,627,954	2,627,954
Fire Department				
Salaries and Wages	420,742	440,504	454,399	454,399
Employee Benefits	249,232	278,200	303,572	310,585
Services and Supplies	114,324	130,100	130,100	130,100
Capital Outlay	-	-	-	-
Subtotal	784,298	848,804	888,071	895,084
Dispatch Center				
Salaries and Wages	300,138	349,742	363,006	363,006
Employee Benefits	166,281	192,375	217,875	217,875
Services and Supplies	28,466	49,950	46,950	46,950
Capital Outlay	-	-	-	-
Subtotal	494,885	592,067	627,831	627,831
Total Function Activities				
Salaries and Wages	1,957,860	2,174,240	2,076,725	2,076,725
Employee Benefits	1,180,034	1,327,112	1,391,481	1,398,494
Services and Supplies	446,103	483,849	491,450	491,450
Capital Outlay	15,719	323,384	184,200	184,200
FUNCTION SUBTOTAL	3,599,716	4,308,585	4,143,856	4,150,869

City of West Wendover
(Local Government)
SCHEDULE B - GENERAL FUND

FUNCTION **Public Safety**

EXPENDITURES BY FUNCTION AND ACTIVITY	(1) ACTUAL PRIOR YEAR ENDING 6/30/2022	(2) CURRENT YEAR ENDING 6/30/2023	(3) BUDGET YEAR ENDING 06/30/24 TENTATIVE APPROVED	(4) BUDGET YEAR ENDING 06/30/24 FINAL APPROVED
Public Works				
Paved Streets				
Salaries and Wages	35,186	72,037	70,460	70,460
Employee Benefits	17,978	37,411	39,396	39,396
Services and Supplies	156,016	181,300	212,500	282,500
Capital Outlay	-	-	-	-
Subtotal	209,180	290,748	322,356	392,356
Public Works - General				
Salaries and Wages	214,480	259,334	253,656	253,656
Employee Benefits	113,187	134,678	141,825	141,825
Services and Supplies	34,548	40,300	49,300	49,300
Capital Outlay	-	15,000	18,000	18,000
Subtotal	362,215	449,312	462,781	462,781
Wendover Will				
Items for Resale	-	-	5,000	18,000
Sewer/Water	-	-	3,000	3,000
Repair & Maintenance - Facilities	-	-	18,000	18,000
Electricity	-	-	2,800	2,800
Subtotal	-	-	28,800	41,800
Total Function Activities				
Salaries and Wages	249,666	331,371	324,116	324,116
Employee Benefits	131,165	172,089	181,221	181,221
Services and Supplies	190,564	221,600	290,600	373,600
Capital Outlay	-	15,000	18,000	18,000
FUNCTION SUBTOTAL	571,395	740,060	813,937	896,937

City of West Wendover

(Local Government)

SCHEDULE B - GENERAL FUND

FUNCTION **Public Works**

EXPENDITURES BY FUNCTION AND ACTIVITY	(1) ACTUAL PRIOR YEAR ENDING 6/30/2022	(2) ESTIMATED CURRENT YEAR ENDING 6/30/2023	(3) BUDGET YEAR ENDING 06/30/24 TENTATIVE APPROVED	(4) BUDGET YEAR ENDING 06/30/24 FINAL APPROVED
Community Development				
Salaries and Wages	143,992	198,434	265,106	265,106
Employee Benefits	64,874	96,267	104,209	104,209
Services and Supplies	85,734	157,700	157,700	164,700
Capital Outlay	-	50,000	50,000	50,000
Total Function Activities				
Salaries and Wages	143,992	198,434	265,106	265,106
Employee Benefits	64,874	96,267	104,209	104,209
Services and Supplies	85,734	157,700	157,700	164,700
Capital Outlay	-	50,000	50,000	50,000
FUNCTION SUBTOTAL	294,600	502,401	577,015	584,015

City of West Wendover

(Local Government)

SCHEDULE B - GENERAL FUND

FUNCTION **Community Development**

EXPENDITURES BY FUNCTION AND ACTIVITY	(1) ACTUAL PRIOR YEAR ENDING 6/30/2022	(2) ESTIMATED CURRENT YEAR ENDING 6/30/2023	(3) BUDGET YEAR ENDING 06/30/24 TENTATIVE APPROVED	(4) BUDGET YEAR ENDING 06/30/24 FINAL APPROVED
Health				
Services and Supplies	10,269	33,500	32,500	32,500
Subtotal	10,269	33,500	32,500	32,500
Animal Control				
Salaries and Wages	64,249	66,036	68,688	68,688
Employee Benefits	32,668	38,879	43,760	43,760
Services and Supplies	19,013	22,200	22,700	42,700
Capital Outlay	-	-	-	-
Subtotal	115,930	127,115	135,148	155,148
Total Function Activities				
Salaries and Wages	64,249	66,036	68,688	68,688
Employee Benefits	32,668	38,879	43,760	43,760
Services and Supplies	29,282	55,700	55,200	75,200
Capital Outlay	-	-	-	-
FUNCTION SUBTOTAL	126,199	160,615	167,648	187,648

City of West Wendover

(Local Government)

SCHEDULE B - GENERAL FUND

FUNCTION **Health**

EXPENDITURES BY FUNCTION AND ACTIVITY	(1) ACTUAL PRIOR YEAR ENDING 6/30/2022	(2) ESTIMATED CURRENT YEAR ENDING 6/30/2023	(3) BUDGET YEAR ENDING 06/30/24 TENTATIVE APPROVED	(4) BUDGET YEAR ENDING 06/30/24 FINAL APPROVED
Community Support				
Services and Supplies	39,148	31,000	31,000	31,000
Total Function Activities				
Salaries and Wages	-	-	-	-
Employee Benefits	-	-	-	-
Services and Supplies	39,148	31,000	31,000	31,000.00
Capital Outlay	-	-	-	-
FUNCTION SUBTOTAL	39,148	31,000	31,000	31,000

City of West Wendover

(Local Government)

SCHEDULE B - GENERAL FUND

FUNCTION **Community Support**

EXPENDITURES BY FUNCTION AND ACTIVITY	(1) ACTUAL PRIOR YEAR ENDING 6/30/2022	(2) ESTIMATED CURRENT YEAR ENDING 6/30/2023	(3) BUDGET YEAR ENDING 06/30/24 TENTATIVE APPROVED	(4) BUDGET YEAR ENDING 06/30/24 FINAL APPROVED
Culture and Recreation				
Services and Supplies	15,522	22,000	24,800	24,800
Total Function Activities				
Salaries and Wages	-	-	-	-
Employee Benefits	-	-	-	-
Services and Supplies	15,522	22,000	24,800	24,800
Capital Outlay	-	-	-	-
FUNCTION SUBTOTAL	15,522	22,000	24,800	24,800

City of West Wendover

(Local Government)

SCHEDULE B - GENERAL FUND

FUNCTION **Culture and Recreation**

EXPENDITURES BY FUNCTION AND ACTIVITY	(1) ACTUAL PRIOR YEAR ENDING 6/30/2022	(2) ESTIMATED CURRENT YEAR ENDING 6/30/2023	(3) BUDGET YEAR ENDING 06/30/24 TENTATIVE APPROVED	(4) BUDGET YEAR ENDING 06/30/24 FINAL APPROVED
Debt Services				
Principal	54,000	55,000	-	-
Interest	1,853	622	-	-
FUNCTION SUBTOTAL	55,853	55,622	-	-

City of West Wendover

(Local Government)

SCHEDULE B - GENERAL FUND

FUNCTION **Public Safety - Debt Service**

EXPENDITURES BY FUNCTION AND ACTIVITY		(1) ACTUAL PRIOR YEAR ENDING 6/30/2022	(2) ESTIMATED CURRENT YEAR ENDING 6/30/2023	(3) BUDGET YEAR ENDING 06/30/24 TENTATIVE APPROVED	(4) BUDGET YEAR ENDING 06/30/24 FINAL APPROVED
PAGE	FUNCTION SUMMARY				
	General Government	1,170,081	1,222,635	1,316,243	1,336,243
	Judicial	482,724	537,854	551,512	551,512
	Public Safety	3,599,716	4,308,585	4,143,856	4,150,869
	Public Works	571,395	740,060	813,937	896,937
	Community Development	294,600	502,401	577,015	584,015
	Health	126,199	160,615	167,648	187,648
	Community Support	39,148	31,000	31,000	31,000
	Culture and Recreation	15,522	22,000	24,800	24,800
	Debt Service	55,853	55,622	-	-
TOTAL EXPENDITURES - ALL FUNCTIONS		6,355,238	7,580,772	7,626,011	7,763,024
OTHER USES:					
CONTINGENCY (Not to exceed 3% of Total Expenditures all Functions)					
Transfers Out (Schedule T)					
	Seizures & Forfeitures	-	-	-	-
	Recreation Fund	-	-	-	-
	Court Admin Assessments Fund	-	-	-	-
	Grant Fund	-	-	50,000	50,000
	Welcome Center Fund	154,000	205,000	136,227	136,227
	Wendover Will Landmark Fund	18,100	197,800	-	-
	Comm Supp & Local Schools Fund	29,211	85,505	94,248	94,248
	Capital Projects Fund	1,370,692	1,107,631	207,561	609,664
					-
SUBTOTAL OTHER USES:		1,572,003	1,595,936	488,036	890,139
TOTAL EXPENDITURES AND OTHER USES		7,927,241	9,176,708	8,114,047	8,653,163
ENDING FUND BALANCE:		5,011,872	5,135,477	6,111,387	5,653,272
TOTAL GENERAL FUND COMMITMENTS AND FUND BALANCE		12,939,113	14,312,185	14,225,434	14,306,435
		-	-	-	

City of West Wendover

(Local Government)

SCHEDULE B - GENERAL FUND

SCHEDULE B SUMMARY - EXPENDITURES, OTHER USES AND FUND BALANCE

GENERAL FUND - ALL FUNCTIONS

REVENUES	(1) ACTUAL PRIOR YEAR ENDING 6/30/2022	(2) ESTIMATED CURRENT YEAR ENDING 6/30/2023	(3) BUDGET YEAR ENDING 06/30/24 TENTATIVE APPROVED	(4) BUDGET YEAR ENDING 06/30/24 FINAL APPROVED
Miscellaneous	-	-	-	-
Subtotal	-	-	-	-
OTHER FINANCING SOURCES:				
Operating Transfers In (Schedule T)	-	-	-	-
BEGINNING FUND BALANCE	3,787	3,787	3,787	3,787
Prior Period Adjustment(s)	-	-	-	-
Residual Equity Transfers	-	-	-	-
TOTAL BEGINNING FUND BALANCE	3,787	3,787	3,787	3,787
TOTAL RESOURCES	3,787	3,787	3,787	3,787
EXPENDITURES				
Services and Supplies	-	-	-	-
Subtotal	-	-	-	-
OTHER USES				
CONTINGENCY (not to exceed 3% of total expenditures)				
Transfers Out (Schedule T)	-	-	-	-
ENDING FUND BALANCE	3,787	3,787	3,787	3,787
TOTAL COMMITMENTS & FUND BALANCE	3,787	3,787	3,787	3,787

City of West Wendover
(Local Government)

FUND **Seizure / Forfeiture**

REVENUES	(1) ACTUAL PRIOR YEAR ENDING 6/30/2022	(2) ESTIMATED CURRENT YEAR ENDING 6/30/2023	(3) BUDGET YEAR ENDING 06/30/24 TENTATIVE APPROVED	(4) BUDGET YEAR ENDING 06/30/24 FINAL APPROVED
Other Taxes	1,967,604	1,700,000	1,780,000	1,780,000
Interest	-	-		-
SLFRF Recovery Grant	503,730	-		
Subtotal	2,471,334	1,700,000	1,780,000	1,780,000
OTHER FINANCING SOURCES:				
Operating Transfers In (Schedule T)		-	-	
BEGINNING FUND BALANCE	163,602	260,624	260,624	260,624
Prior Period Adjustment(s)	-	-	-	-
Residual Equity Transfers	-	-	-	-
TOTAL BEGINNING FUND BALANCE	163,602	260,624	260,624	260,624
TOTAL RESOURCES	2,634,936	1,960,624	2,040,624	2,040,624
EXPENDITURES				
Room Tax Distribution	2,374,312	1,698,100	1,778,100	1,778,100
Admin Assessments	-	1,900	1,900	1,900
Subtotal	2,374,312	1,700,000	1,780,000	1,780,000
OTHER USES				
CONTINGENCY (not to exceed 3% of total expenditures)				
Transfers Out (Schedule T)				
ENDING FUND BALANCE	260,624	260,624	260,624	260,624
TOTAL COMMITMENTS & FUND BALANCE	2,634,936	1,960,624	2,040,624	2,040,624

City of West Wendover
(Local Government)

FUND **Recreation Fund**

REVENUES	(1) ACTUAL PRIOR YEAR ENDING 6/30/2022	(2) ESTIMATED CURRENT YEAR ENDING 6/30/2023	(3) BUDGET YEAR ENDING 06/30/24 TENTATIVE APPROVED	(4) BUDGET YEAR ENDING 06/30/24 FINAL APPROVED
Court Assessments	5,733	8,500	7,140	7,140
Interest	28	300	360	360
SLFRF Recovery Grant	2,152	-	-	-
Subtotal	7,913	8,800	7,500	7,500
OTHER FINANCING SOURCES:				
Operating Transfers In (Schedule T)	-	-		
BEGINNING FUND BALANCE	63,879	69,861	73,661	73,661
Prior Period Adjustment(s)	-	-	-	-
Residual Equity Transfers	-	-	-	-
TOTAL BEGINNING FUND BALANCE	63,879	69,861	73,661	73,661
TOTAL RESOURCES	71,792	78,661	81,161	81,161
EXPENDITURES				
Supplies and Services	1,930	5,000	7,500	7,500
Capital Outlay	-	-	-	-
Subtotal	1,930	5,000	7,500	7,500
OTHER USES				
CONTINGENCY (not to exceed 3% of total expenditures)				
Transfers Out (Schedule T)	-	-	-	-
ENDING FUND BALANCE	69,861	73,661	73,661	73,661
TOTAL COMMITMENTS & FUND BALANCE	71,792	78,661	81,161	81,161

City of West Wendover
(Local Government)

FUND **Court Administrative Assessments**

REVENUES	(1) ACTUAL PRIOR YEAR ENDING 6/30/2022	(2) ESTIMATED CURRENT YEAR ENDING 6/30/2023	(3) BUDGET YEAR ENDING 06/30/24 TENTATIVE APPROVED	(4) BUDGET YEAR ENDING 06/30/24 FINAL APPROVED
COVID-19 CARES Fund Grant	-	2,870,346	-	-
COPS Tech Grant	-	-	376,000	376,000
HRSA Grant	-	320,000	-	-
	-	-	-	-
Subtotal	-	3,190,346	376,000	376,000
OTHER FINANCING SOURCES:				
Operating Transfers In (Schedule T)				
From General Fund	-	-	50,000	50,000
BEGINNING FUND BALANCE	-	-	-	-
Prior Period Adjustment(s)	-	-	-	-
Residual Equity Transfers	-	-	-	-
TOTAL BEGINNING FUND BALANCE	-	-	-	-
TOTAL RESOURCES	-	3,190,346	426,000	426,000
EXPENDITURES				
Capital Outlay				
CARES Grant Qualifying Expenses	-	-	-	-
SLFRF Grant Qualifying Expenses	-	2,870,346	-	-
COPS Tech Grant Qualifying Expense	-	-	426,000	426,000
HRSA Grant Qualifying Expenses	-	320,000	-	-
Subtotal	-	3,190,346	426,000	426,000
OTHER USES				
CONTINGENCY (not to exceed 3% of total expenditures)				
Transfers Out (Schedule T)		-	-	-
ENDING FUND BALANCE	-	-	-	-
TOTAL COMMITMENTS & FUND BALANCE	-	3,190,346	426,000	426,000

City of West Wendover
(Local Government)

FUND **Grants Fund**

REVENUES	(1) ACTUAL PRIOR YEAR ENDING 6/30/2022	(2) ESTIMATED CURRENT YEAR ENDING 6/30/2023	(3) BUDGET YEAR ENDING 06/30/24 TENTATIVE APPROVED	(4) BUDGET YEAR ENDING 06/30/24 FINAL APPROVED
Intergovernmental				
Tourism Grant Projects	22,000	50,000	25,000	25,000
SLFRF Recovery Grant	48,012	-	-	-
Miscellaneous				
Elko County Recreation Board	50,000	70,000	70,000	70,000
Merchandise Sales	1,860	2,500	2,500	2,500
Interest	-			
Subtotal	121,872	122,500	97,500	97,500
OTHER FINANCING SOURCES:				
Operating Transfers In (Schedule T)				
From General Fund	154,000	205,000	136,227	136,227
BEGINNING FUND BALANCE	17,630	30,945	31,911	31,911
Prior Period Adjustment(s)	-	-	-	-
Residual Equity Transfers	-	-	-	-
TOTAL BEGINNING FUND BALANCE	17,630	30,945	31,911	31,911
TOTAL RESOURCES	293,502	358,445	265,638	265,638
EXPENDITURES				
Salaries and Wages	110,351	116,272	97,077	97,077
Employee Benefits	60,858	63,762	29,150	29,150
Services and Supplies	27,854	46,500	47,500	47,500
Grant Expenses	63,494	100,000	60,000	60,000
Capital Outlay	-	-	-	-
Subtotal	262,557	326,534	233,727	233,727
OTHER USES				
CONTINGENCY (not to exceed 3% of total expenditures)				
Transfers Out (Schedule T)				
ENDING FUND BALANCE	30,945	31,911	31,911	31,911
TOTAL COMMITMENTS & FUND BALANCE	293,502	358,445	265,638	265,638

City of West Wendover
(Local Government)

FUND **Welcome Center**

REVENUES	(1) ACTUAL PRIOR YEAR ENDING 6/30/2022	(2) ESTIMATED CURRENT YEAR ENDING 6/30/2023	(3) BUDGET YEAR ENDING 06/30/24 TENTATIVE APPROVED	(4) BUDGET YEAR ENDING 06/30/24 FINAL APPROVED
Miscellaneous				
Donations from Private Sources	-	-	-	-
Grants	-	-	-	-
Merchandise Sales	437	200	-	-
Interest	-	-	-	-
SLFRF Recovery Grant	4,803	-	-	
Subtotal	5,240	200	-	-
OTHER FINANCING SOURCES:				
Operating Transfers In (Schedule T)				
From General Fund	18,100	197,800	-	-
BEGINNING FUND BALANCE	14,450	17,712	17,712	17,712
Prior Period Adjustment(s)	-	-	-	-
Residual Equity Transfers	-	-	-	-
TOTAL BEGINNING FUND BALANCE	14,450	17,712	17,712	17,712
TOTAL RESOURCES	37,790	215,712	17,712	17,712
EXPENDITURES				
Services and Supplies	20,078	198,000	-	-
Grant Expenses	-	-		
Subtotal	20,078	198,000	-	-
OTHER USES				
CONTINGENCY (not to exceed 3% of total expenditures)				
Transfers Out (Schedule T)				
ENDING FUND BALANCE	17,712	17,712	17,712	17,712
TOTAL COMMITMENTS & FUND BALANCE	37,790	215,712	17,712	17,712

City of West Wendover
(Local Government)

FUND **Wendover Will Landmark**

REVENUES	(1) ACTUAL PRIOR YEAR ENDING 6/30/2022	(2) ESTIMATED CURRENT YEAR ENDING 6/30/2023	(3) BUDGET YEAR ENDING 06/30/24 TENTATIVE APPROVED	(4) BUDGET YEAR ENDING 06/30/24 FINAL APPROVED
Miscellaneous	-	-	-	-
Interest	-	-	-	-
Grant Revenue	-	-	-	-
Subtotal	-	-	-	-
OTHER FINANCING SOURCES:				
Operating Transfers In (Schedule T)				
From General Fund	29,211	85,505	94,248	94,248
BEGINNING FUND BALANCE	-	10	10	10
Prior Period Adjustment(s)	-	-	-	-
Residual Equity Transfers	-	-	-	-
TOTAL BEGINNING FUND BALANCE	-	10	10	10
TOTAL RESOURCES	29,211	85,515	94,258	94,258
EXPENDITURES				
Services and Supplies	29,201	85,505	94,248	94,248
Capital Outlay	-	-	-	-
Subtotal	29,201	85,505	94,248	94,248
OTHER USES				
CONTINGENCY (not to exceed 3% of total expenditures)				
Transfers Out (Schedule T)				
ENDING FUND BALANCE	10	10	10	10
TOTAL COMMITMENTS & FUND BALANCE	29,211	85,515	94,258	94,258

City of West Wendover
(Local Government)

FUND **Community Support / Local Schools**

REVENUES	(1) ACTUAL PRIOR YEAR ENDING 6/30/2022	(2) ESTIMATED CURRENT YEAR ENDING 6/30/2023	(3) BUDGET YEAR ENDING 06/30/24 TENTATIVE APPROVED	(4) BUDGET YEAR ENDING 06/30/24 FINAL APPROVED
Intergovernmental Resources	59,564	50,000	50,000	50,000
SLFRF Recovery Grant	11,308	-	-	-
Interest	-	-	-	-
Subtotal	70,872	50,000	50,000	50,000
OTHER FINANCING SOURCES:				
Operating Transfers In (Schedule T)	-	-	-	-
BEGINNING FUND BALANCE	44,561	54,125	54,125	54,125
Prior Period Adjustment(s)	-	-	-	-
Residual Equity Transfers	-	-	-	-
TOTAL BEGINNING FUND BALANCE	44,561	54,125	54,125	54,125
TOTAL RESOURCES	115,433	104,125	104,125	104,125
EXPENDITURES				
Total Expenditures	-	-	-	-
Subtotal	-	-	-	-
OTHER USES				
CONTINGENCY (not to exceed 3% of total expenditures)				
Transfers Out (Schedule T)				
To Capital Projects Fund	61,308	50,000	50,000	50,000
ENDING FUND BALANCE	54,125	54,125	54,125	54,125
TOTAL COMMITMENTS & FUND BALANCE	115,433	104,125	104,125	104,125

City of West Wendover
(Local Government)

FUND **Ad Valorem Fund**

REVENUES	(1) ACTUAL PRIOR YEAR ENDING 6/30/2022	(2) ESTIMATED CURRENT YEAR ENDING 6/30/2023	(3) BUDGET YEAR ENDING 06/30/24 TENTATIVE APPROVED	(4) BUDGET YEAR ENDING 06/30/24 FINAL APPROVED
Miscellaneous	30,007	2,500	-	-
Interest	124	500	1,800	1,800
Grant Proceeds	205,511	357,000	8,286,561	5,087,807
Subtotal Revenues	235,642	360,000	8,288,361	5,089,607
OTHER FINANCING SOURCES:				
Operating Transfers In (Schedule T)				
From General Fund	1,370,692	1,107,631	207,561	609,664
From Court Administrative Assessment	-	-	-	-
From Ad Valorem Capital Projects Fund	61,308	50,000	50,000	50,000
Total Operating Transfers In	1,432,000	1,157,631	257,561	659,664
Proceeds from Long Term Debt				
State Infrastructure Bank Loan	-	-	-	2,841,754
Interim Debenture Construction Loan	855,253	1,032,417	12,834,069	12,834,069
Gain of Sale of Fixed Assets	42,300	234,000	-	368,000
BEGINNING FUND BALANCE	383,961	583,274	583,275	583,275
Prior Period Adjustment(s)	-	-	-	-
Residual Equity Transfers	-	-	-	-
TOTAL BEGINNING FUND BALANCE	383,961	583,274	583,275	583,275
TOTAL RESOURCES	2,949,156	3,367,322	21,963,266	22,376,369
EXPENDITURES				
Capital Outlay	1,844,895	2,137,073	19,970,352	20,383,455
Debt Service				
Principle	332,119	346,597	442,681	442,681
Interest	188,868	300,377	966,958	966,958
Subtotal	2,365,882	2,784,047	21,379,991	21,793,094
OTHER USES				
CONTINGENCY (not to exceed 3% of total expenditures)				
Transfers Out (Schedule T)				
ENDING FUND BALANCE	583,274	583,275	583,275	583,275
TOTAL COMMITMENTS & FUND BALANCE	2,949,156	3,367,322	21,963,266	22,376,369

City of West Wendover
(Local Government)

FUND **Capital Projects Fund**

Page: 31
Schedule B-14

REVENUES	(1) ACTUAL PRIOR YEAR ENDING 6/30/2022	(2) ESTIMATED CURRENT YEAR ENDING 6/30/2023	(3) BUDGET YEAR ENDING 06/30/24 TENTATIVE APPROVED	(4) BUDGET YEAR ENDING 06/30/24 FINAL APPROVED
Interest Revenue	-	-	-	
Subtotal	-	-	-	-
OTHER FINANCING SOURCES:				
Operating Transfers In (Schedule T)				
BEGINNING FUND BALANCE	-	-	-	-
Prior Period Adjustment(s)	-	-	-	-
Residual Equity Transfers	-	-	-	-
TOTAL BEGINNING FUND BALANCE	-	-	-	-
TOTAL RESOURCES	-	-	-	-
EXPENDITURES				
General Government Benefits			-	-
Subtotal	-	-	-	-
OTHER USES				
CONTINGENCY (not to exceed 3% of total expenditures)				
Operating Transfers Out (Schedule T)				
ENDING FUND BALANCE	-	-	-	-
TOTAL COMMITMENTS & FUND BALANCE	-	-	-	-

City of West Wendover
(Local Government)

SCHEDULE B **Expendable Trust Fund**

FUND **Unemployment Insurance Liability Reserve**

PROPRIETARY FUND	(1) ACTUAL PRIOR YEAR ENDING 6/30/2022	(2) ESTIMATED CURRENT YEAR ENDING 6/30/2023	(3) BUDGET YEAR ENDING 06/30/24 TENTATIVE APPROVED	(4) BUDGET YEAR ENDING 06/30/24 FINAL APPROVED
OPERATING REVENUE				
Water Service Charges	1,337,033	1,335,015	1,625,100	1,625,100
Connection Fees	3,597	4,000	4,000	4,000
	-	-	-	
TOTAL OPERATING REVENUE	1,340,630	1,339,015	1,629,100	1,629,100
OPERATING EXPENSE				
Salaries and Wages	240,323	204,204	222,317	222,317
Employee Benefits	83,386	117,529	137,246	137,246
Services and Supplies	882,875	986,377	1,157,688	1,157,688
Capital Outlay	953	1,000	5,000	5,000
Depreciation/Amortization	138,038	143,000	140,000	140,000
TOTAL OPERATING EXPENSE	1,345,575	1,452,110	1,662,251	1,662,251
Operating Income or (Loss)	**(4,945)**	**(113,095)**	**(33,151)**	**(33,151)**
NONOPERATING REVENUES				
Interest Earned	49,145	51,394	51,367	51,367
Property Taxes	-	-	-	-
Impact fees	25,159	110,000	50,000	50,000
Miscellaneous	13,831	13,000	12,000	12,000
Grant Revenue - SLFRF Recovery Grant	238,048	-	-	-
Contributions from CU for debt pmts	10,584	10,584	10,584	10,584
Proceeds from Sale of Bonds	-	-	-	-
TOTAL NONOPERATING REVENUES	336,767	184,978	123,951	123,951
NONOPERATING EXPENSES				
Interest Expense	68,674	62,787	58,349	58,349
Loss on disposal of assets	-	-	-	-
TOTAL NONOPERATING EXPENSES	68,674	62,787	58,349	58,349
Net Income before Operating Transfers	**263,148**	**9,096**	**32,451**	**32,451**
Transfers (Schedule T)				
In	-	-	-	-
Out	-	-	-	-
Net Operating Transfers	-	-	-	-
CHANGE IN NET POSITION	**263,148**	**9,096**	**32,451**	**32,451**

City of West Wendover
(Local Government)

SCHEDULE F-1 REVENUES, EXPENSES AND NET POSITION
FUND **Water Fund**

Page: 33
Schedule F-1

PROPRIETARY FUND	(1) ACTUAL PRIOR YEAR ENDING 6/30/2022	(2) ESTIMATED CURRENT YEAR ENDING 6/30/2023	(3) BUDGET YEAR ENDING 06/30/24 TENTATIVE APPROVED	(4) FINAL APPROVED
A. CASH FLOWS FROM OPERATING ACTIVITIES:				
Net Operating Income	(4,945)	(113,095)	(33,151)	(33,151)
Depreciation and Amortization	138,038	143,000	140,000	140,000
Pension expense	(612)	-	-	-
Employer pension contributions	(34,565)	-	-	-
Decrease (Increase) in Accounts Receivable	43,064	-	-	-
Decrease (Increase) in Inventory	7,631	-	-	-
Increase (Decrease) in Accounts Payable	5,363	-	-	-
Increase (Decrease) in Accrued Liabilities	-	-	-	-
Increase (Decrease) in Deposits	600	-	-	-
(Increase) Decrease in Prepaid Expenses	20	-	-	-
Increase (Decrease) in Compensated Abs	(1,360)	-	-	-
a. Net cash provided by (or used for) operating activities	153,234	29,905	106,849	106,849
B. CASH FLOWS FROM NONCAPITAL FINANCING ACTIVITIES:				
Net interfund receipts/(payments)	-	-	-	-
Net component unit receipts/(payments)	110,735	10,584	10,584	10,584
Internal activities-payments (to)/from other funds	-	94,760	96,813	96,813
Cash received from misc sources	13,831	13,000	12,000	12,000
b. Net cash provided by (or used for) noncapital financing activities	124,566	118,344	119,397	119,397
C. CASH FLOWS FROM CAPITAL AND RELATED FINANCING ACTIVITIES:				
Acquisition of capital assets	(9,526)	-	-	-
Interest paid	(68,674)	(62,787)	(58,349)	(58,349)
Cash paid for bond issuance costs	-	-	-	-
Principal paid on bonds/notes	(186,187)	(193,897)	(199,728)	(199,728)
Impact fees	25,159	110,000	50,000	50,000
Grant Income	238,048	-	-	-
Proceeds from issuance of bonds/notes	-	-	-	-
Net collections from (advances to) component unit	-	-	-	-
c. Net cash provided by (or used for) capital and related financing activities	(1,180)	(146,684)	(208,077)	(208,077)
D. CASH FLOWS FROM INVESTING ACTIVITIES:				
Interest income	49,145	51,394	51,367	51,367
d. Net cash provided by (or used in) investing activities	49,145	51,394	51,367	51,367
NET INCREASE (DECREASE) in cash and cash equivalents (a+b+c+d)	325,765	52,959	69,536	69,536
CASH AND CASH EQUIVALENTS AT JULY 1, 20xx	**1,773,023**	**2,098,788**	**2,151,747**	**2,151,747**
CASH AND CASH EQUIVALENTS AT JUNE 30, 20xx	**2,098,788**	**2,151,747**	**2,221,283**	**2,221,283**

City of West Wendover
(Local Government)

SCHEDULE F-2 STATEMENT OF CASH FLOWS

FUND **Water Fund**

PROPRIETARY FUND	(1) ACTUAL PRIOR YEAR ENDING 6/30/2022	(2) ESTIMATED CURRENT YEAR ENDING 6/30/2023	(3) BUDGET YEAR ENDING 06/30/24 TENTATIVE APPROVED	(4) BUDGET YEAR ENDING 06/30/24 FINAL APPROVED
OPERATING REVENUE				
Sewer Services Charges	1,220,332	1,272,000	1,366,800	1,366,800
TOTAL OPERATING REVENUE	1,220,332	1,272,000	1,366,800	1,366,800
OPERATING EXPENSE				
Salaries and Wages	332,126	286,097	272,872	272,872
Employee Benefits	130,003	166,042	164,538	164,538
Services and Supplies	433,843	479,600	416,900	416,900
Capital Outlay	-	-	-	-
				-
Depreciation/Amortization	544,653	555,500	545,500	545,500
TOTAL OPERATING EXPENSE	1,440,625	1,487,239	1,399,810	1,399,810
Operating Income or (Loss)	**(220,293)**	**(215,239)**	**(33,010)**	**(33,010)**
NONOPERATING REVENUES				
Interest Earned	365	4,500	6,300	6,300
Property Taxes	-	-	-	-
Subsidies	-	-	-	-
Impact Fees	12,851	10,000	30,000	30,000
Miscellaneous	7,766	6,500	57,700	57,700
Grant Revenue	816,491	-	-	-
Proceeds from Sale of Bonds	-	-	-	-
TOTAL NONOPERATING REVENUES	837,473	21,000	94,000	94,000
NONOPERATING EXPENSES				
Interest Expense	66,239	63,824	60,670	60,670
TOTAL NONOPERATING EXPENSES	66,239	63,824	60,670	60,670
Net Income before Operating Transfers	**550,940**	**(258,063)**	**320**	**320**
Transfers (Schedule T)				
In	-	-	-	
Out	-	-	-	
Net Operating Transfers	-	-	-	-
CHANGE IN NET POSITION	**550,940**	**(258,063)**	**320**	**320**

City of West Wendover
(Local Government)

SCHEDULE F-1 REVENUES, EXPENSES AND NET POSITION
FUND **Sewer Fund**

PROPRIETARY FUND	(1) ACTUAL PRIOR YEAR ENDING 6/30/2022	(2) ESTIMATED CURRENT YEAR ENDING 6/30/2023	(3) BUDGET YEAR ENDING 06/30/24 TENTATIVE APPROVED	(4) BUDGET YEAR ENDING 06/30/24 FINAL APPROVED
A. CASH FLOWS FROM OPERATING ACTIVITIES:				
Net Operating Income	(220,293)	(215,239)	(33,010)	(33,010)
Depreciation and Amortization	544,653	555,500	545,500	545,500
Pension Expense	7,221	-	-	-
Employer pension contributions	(45,250)	-	-	-
Decrease (Increase) in Accounts Receivable	41,966	-	-	-
Decrease (Increase) in Due from Other Funds	-	-	-	-
Decrease (Increase) in Inventory	-	-	-	-
(Increase) Decrease in Prepaid Expenses	-	-	-	-
Increase (Decrease) in Accounts Payable	(11,193)	-	-	-
Increase (Decrease) in Accrued Liabilities	-	-	-	-
Increase (Decrease) in Compensated Abs	(591)	-	-	-
a. Net cash provided by (or used for) operating activities	316,513	340,261	512,490	512,490
B. CASH FLOWS FROM NONCAPITAL FINANCING ACTIVITIES:				
Miscellaneous Income	7,766	6,500	57,700	57,700
Net Component unit receipts/(payments)	-	-	-	-
Internal activities-payments (to)/from other funds	-	-	-	-
b. Net cash provided by (or used for) noncapital financing activities	7,766	6,500	57,700	57,700
C. CASH FLOWS FROM CAPITAL AND RELATED FINANCING ACTIVITIES:				
Acquisition of capital assets	(9,524)	-	-	-
Interest paid	(66,239)	(63,824)	(60,670)	(60,670)
Cash paid for bond issuance costs	-			
Principal paid on bonds/notes	(125,124)	(129,307)	(133,813)	(133,813)
Grant Income	816,491	-	-	-
Proceeds from issuance of bonds/notes	-	-	-	-
Impact Fees	12,851	10,000	30,000	30,000
c. Net cash provided by (or used for) capital and related financing activities	628,455	(183,131)	(164,483)	(164,483)
D. CASH FLOWS FROM INVESTING ACTIVITIES:				
Interest income	365	4,500	6,300	6,300
d. Net cash provided by (or used in) investing activities	365	4,500	6,300	6,300
NET INCREASE (DECREASE) in cash and cash equivalents (a+b+c+d)	953,098	168,130	412,007	412,007
CASH AND CASH EQUIVALENTS AT JULY 1, 20xx	**268,607**	**1,221,705**	**1,389,835**	**1,389,835**
CASH AND CASH EQUIVALENTS AT JUNE 30, 20xx	**1,221,705**	**1,389,835**	**1,801,842**	**1,801,842**

City of West Wendover
(Local Government)

SCHEDULE F-2 STATEMENT OF CASH FLOWS

FUND **Sewer Fund**

PROPRIETARY FUND	(1) ACTUAL PRIOR YEAR ENDING 6/30/2022	(2) ESTIMATED CURRENT YEAR ENDING 6/30/2023	(3) BUDGET YEAR ENDING 06/30/24 TENTATIVE APPROVED	(4) BUDGET YEAR ENDING 06/30/24 FINAL APPROVED
OPERATING REVENUE				
Landfill Revenue	1,060,188	812,200	844,700	844,700
Sludge Disposal Revenue	-	-	-	-
Garbage Revenue	703,469	699,900	735,400	735,400
Compost Revenue	3,352	2,100	1,800	1,800
TOTAL OPERATING REVENUE	1,767,009	1,514,200	1,581,900	1,581,900
OPERATING EXPENSE				
Salaries and Wages	291,040	449,484	415,533	415,533
Employee Benefits	119,985	242,706	236,661	236,661
Services and Supplies	240,628	418,238	400,680	400,680
Capital Outlay	-	57,696	44,771	44,771
Depreciation/Amortization	353,041	383,100	353,000	353,000
TOTAL OPERATING EXPENSE	1,004,694	1,551,224	1,450,645	1,450,645
Operating Income or (Loss)	**762,315**	**(37,024)**	**131,255**	**131,255**
NONOPERATING REVENUES				
Interest Earned	1,216	13,000	6,000	6,000
Property Taxes	-	-	-	-
Subsidies	-	-	-	-
Consolidated Tax	-	-	-	-
Miscellaneous	24,917	3,000	19,900	19,900
Grant Revenue	307,203	-	-	-
Proceeds from Sale of Bonds	-	-	-	-
TOTAL NONOPERATING REVENUES	333,336	16,000	25,900	25,900
NONOPERATING EXPENSES				
Interest Expense	16,766	12,169	4,889	4,889
TOTAL NONOPERATING EXPENSES	16,766	12,169	4,889	4,889
Net Income before Operating Transfers	**1,078,885**	**(33,193)**	**152,266**	**152,266**
Transfers (Schedule T)				
In	-	-	-	-
Out	-	-	-	-
Net Operating Transfers	-	-	-	-
CHANGE IN NET POSITION	**1,078,885**	**(33,193)**	**152,266**	**152,266**

City of West Wendover
(Local Government)

SCHEDULE F-1 REVENUES, EXPENSES AND NET POSITION
FUND **Combined Garbage/Compost Fund**

PROPRIETARY FUND	(1) ACTUAL PRIOR YEAR ENDING 6/30/2022	(2) ESTIMATED CURRENT YEAR ENDING 6/30/2023	(3) BUDGET YEAR ENDING 06/30/24 TENTATIVE APPROVED	(4) BUDGET YEAR ENDING 06/30/24 FINAL APPROVED
A. CASH FLOWS FROM OPERATING ACTIVITIES:				
Net Operating Income	762,315	(37,024)	131,255	131,255
Depreciation and Amortization	353,041	383,100	353,000	353,000
Pension Expense	2,091	-	-	-
Employer pension contributions	(40,842)	-	-	-
Decrease (Increase) in Accounts Receivable	(8,838)	-	-	-
Decrease (Increase) in Due from Other Funds	-	-	-	-
Decrease (Increase) in Inventory	-	-	-	-
(Increase) Decrease in Prepaid Expenses	(552)	-	-	-
Increase (Decrease) in Accounts Payable	8,555	-	-	-
Increase (Decrease) in Accrued Liabilities	-	-	-	-
Increase (Decrease) in Compensated Abs	(3,012)	-	-	-
a. Net cash provided by (or used for) operating activities	1,072,758	346,076	484,255	484,255
B. CASH FLOWS FROM NONCAPITAL FINANCING ACTIVITIES:				
Miscellaneous Income	24,917	3,000	19,900	19,900
Net Component unit receipts/(payments)	-	-	-	-
Internal activities-payments (to)/from other funds	-	-	-	-
b. Net cash provided by (or used for) noncapital financing activities	24,917	3,000	19,900	19,900
C. CASH FLOWS FROM CAPITAL AND RELATED FINANCING ACTIVITIES:				
Acquisition of capital assets	(9,525)	-	-	-
Interest paid	(16,766)	(12,169)	(4,889)	(4,889)
Cash paid for bond issuance costs	-	-	-	-
Principal paid on bonds/notes	(77,334)	(251,083)	(179,654)	(179,654)
Grant Income	307,203	-	-	-
Proceeds from issuance of bonds/notes	-	-	-	-
c. Net cash provided by (or used for) capital and related financing activities	203,578	(263,252)	(184,543)	(184,543)
D. CASH FLOWS FROM INVESTING ACTIVITIES:				
Interest income	1,216	13,000	6,000	6,000
d. Net cash provided by (or used in) investing activities	1,216	13,000	6,000	6,000
NET INCREASE (DECREASE) in cash and cash equivalents (a+b+c+d)	1,302,469	98,824	325,612	325,612
CASH AND CASH EQUIVALENTS AT JULY 1, 20xx	**2,157,615**	**3,460,084**	**3,558,908**	**3,558,908**
CASH AND CASH EQUIVALENTS AT JUNE 30, 20xx	**3,460,084**	**3,558,908**	**3,884,520**	**3,884,520**

City of West Wendover
(Local Government)

SCHEDULE F-2 STATEMENT OF CASH FLOWS
FUND **Combined Garbage/Compost Fund**

PROPRIETARY FUND	(1) ACTUAL PRIOR YEAR ENDING 6/30/2022	(2) ESTIMATED CURRENT YEAR ENDING 6/30/2023	(3) BUDGET YEAR ENDING 06/30/24 TENTATIVE APPROVED	(4) BUDGET YEAR ENDING 06/30/24 FINAL APPROVED
OPERATING REVENUE				
Charges for Services	716,382	743,400	807,500	807,500
TOTAL OPERATING REVENUE	716,382	743,400	807,500	807,500
OPERATING EXPENSE				
Salaries and Wages	57,450	58,700	40,626	40,626
Employee Benefits	2,452	44,930	40,067	40,067
Services and Supplies	384,729	390,377	485,750	485,750
Depreciation/Amortization	392,503	392,700	392,700	392,700
TOTAL OPERATING EXPENSE	837,134	886,707	959,143	959,143
Operating Income or (Loss)	**(120,752)**	**(143,307)**	**(151,643)**	**(151,643)**
NONOPERATING REVENUES				
Interest Earned	4,022	41,500	37,071	37,071
Property Taxes	-	-	-	-
Subsidies	-	-	-	-
Consolidated Tax	-	-	-	-
Miscellaneous	60,000	60,000	60,000	60,000
Grant Revenue	154,315	-	-	-
Proceeds from Sale of Bonds	-	-	-	-
TOTAL NONOPERATING REVENUES	**218,337**	**101,500**	**97,071**	**97,071**
NONOPERATING EXPENSES				
Interest Expense	-	-	-	-
Interest Expense on Interfund bonds	48,587	46,394	44,167	44,167
Debt paid through Primary Government	10,584	10,584	10,584	10,584
TOTAL NONOPERATING EXPENSES	**59,171**	**56,978**	**54,751**	**54,751**
Net Income before Operating Transfers	**38,414**	**(98,785)**	**(109,323)**	**(109,323)**
Transfers (Schedule T)				
In	-	-	-	-
Out	-	-	-	-
Net Operating Transfers	**-**	**-**	**-**	**-**
CHANGE IN NET POSITION	**38,414**	**(98,785)**	**(109,323)**	**(109,323)**

City of West Wendover
(Local Government)

SCHEDULE F-1 REVENUES, EXPENSES AND NET POSITION

FUND **Johnson Springs Transmission System Fund**

PROPRIETARY FUND	(1) ACTUAL PRIOR YEAR ENDING 6/30/2022	(2) ESTIMATED CURRENT YEAR ENDING 6/30/2023	(3) BUDGET YEAR ENDING 06/30/24 TENTATIVE APPROVED	(4) BUDGET YEAR ENDING 06/30/24 FINAL APPROVED
A. CASH FLOWS FROM OPERATING ACTIVITIES:				
Net Operating Income	(120,752)	(143,307)	(151,643)	(151,643)
Depreciation and Amortization	392,503	392,700	392,700	392,700
Pension Expense	(12,763)	-	-	-
Employer pension contributions	(9,114)	-	-	-
Decrease (Increase) in Accounts Receivable	8,699	-	-	-
Decrease (Increase) in Due from Other Funds	-	-	-	-
Decrease (Increase) in Inventory	(832)	-	-	-
(Increase) Decrease in Prepaid Expenses	-	-	-	-
Increase (Decrease) in Accounts Payable	(30,408)	-	-	-
Increase (Decrease) in Accrued Liabilities	-	-	-	-
Increase (Decrease) in Deposits	-	-	-	-
Increase (Decrease) in Due to Other Funds	-	-	-	-
Increase (Decrease) in Compensated Abs	296	-	-	-
a. Net cash provided by (or used for) operating activities	**227,629**	**249,393**	**241,057**	**241,057**
B. CASH FLOWS FROM NONCAPITAL FINANCING ACTIVITIES:				
Miscellaneous Income	60,000	60,000	60,000	60,000
Due to general pooled cash	-	-	-	-
Internal activities-payments (to)/from other funds	(10,584)	(10,584)	(10,584)	(10,584)
SLFRF Transfer-In		-		
b. Net cash provided by (or used for) noncapital financing activities	49,416	49,416	49,416	49,416
C. CASH FLOWS FROM CAPITAL AND RELATED FINANCING ACTIVITIES:				
Acquisition of capital assets	(9,525)	-	-	-
Interest paid	-	-	-	-
Interest paid on Interfund bonds	(48,587)	(46,394)	(44,167)	(44,167)
Cash paid for bond issuance costs	-			
Principal paid on bonds/notes	-	-	-	-
Principal paid on Interfund bonds	(100,151)	(94,760)	(96,813)	(96,813)
Grant Income	154,315	-	-	-
Proceeds from issuance of bonds/notes	-	-	-	-
Net collections from (advances to) component unit	-	-	-	
c. Net cash provided by (or used for) capital and related financing activities	(3,948)	(141,154)	(140,980)	(140,980)
D. CASH FLOWS FROM INVESTING ACTIVITIES:				
Interest income	4,022	41,500	37,071	37,071
d. Net cash provided by (or used in) investing activities	4,022	41,500	37,071	37,071
NET INCREASE (DECREASE) in cash and cash equivalents (a+b+c+d)	277,119	199,155	186,564	186,564
CASH AND CASH EQUIVALENTS AT JULY 1, 20xx	282,483	559,602	758,757	758,757
CASH AND CASH EQUIVALENTS AT JUNE 30, 20xx	**559,602**	**758,757**	**945,321**	**945,321**

Last Revised 1/24/2023

(Local Government)

SCHEDULE F-2 STATEMENT OF CASH FLOWS

FUND **Johnson Springs Transmission System Fund**

PROPRIETARY FUND	(1) ACTUAL PRIOR YEAR ENDING 6/30/2022	(2) ESTIMATED CURRENT YEAR ENDING 6/30/2023	(3) BUDGET YEAR ENDING 06/30/24 TENTATIVE APPROVED	(4) BUDGET YEAR ENDING 06/30/24 FINAL APPROVED
OPERATING REVENUE				
Charges for Services	1,015,257	1,555,146	1,043,221	1,043,221
TOTAL OPERATING REVENUE	1,015,257	1,555,146	1,043,221	1,043,221
OPERATING EXPENSE				
Employee Benefits	1,202,167	1,713,700	1,085,993	1,085,993
Depreciation/Amortization				
TOTAL OPERATING EXPENSE	1,202,167	1,713,700	1,085,993	1,085,993
Operating Income or (Loss)	**(186,910)**	**(158,554)**	**(42,772)**	**(42,772)**
NONOPERATING REVENUES				
SLFRF Recovery Grant	159,918	-	-	-
General Fund Contribution	-	158,554	42,772	42,772
TOTAL NONOPERATING REVENUES	159,918	158,554	42,772	42,772
NONOPERATING EXPENSES				
Interest Expense				
TOTAL NONOPERATING EXPENSES	-	-	-	-
Net Income before Operating Transfers	**(26,992)**	**-**	**-**	**-**
Transfers (Schedule T)				
In	-	-	-	-
Out	-	-	-	
Net Operating Transfers	-	-	-	-
CHANGE IN NET POSITION	**(26,992)**	**-**	**-**	**-**

City of West Wendover
(Local Government)

SCHEDULE F-1 REVENUES, EXPENSES AND NET POSITION
FUND **Health Insurance Fund**

PROPRIETARY FUND	(1) ACTUAL PRIOR YEAR ENDING 6/30/2022	(2) ESTIMATED CURRENT YEAR ENDING 6/30/2023	(3) BUDGET YEAR ENDING 06/30/24 TENTATIVE APPROVED	(4) FINAL APPROVED
A. CASH FLOWS FROM OPERATING ACTIVITIES:				
Net Operating Income	(186,910)	(158,554)	(42,772)	(42,772)
Payments (to)/from other funds	-	-	-	-
(Increase) Decrease in Receivables	-	-	-	-
(Increase) Decrease in Prepaid Expenses	(3,351)	-	-	-
Increase (Decrease) in Accounts Payable	2,864	-	-	-
Increase (Decrease) in Unearned Revenue	-	-	-	-
a. Net cash provided by (or used for) operating activities	(187,397)	(158,554)	(42,772)	(42,772)
B. CASH FLOWS FROM NONCAPITAL FINANCING ACTIVITIES:				
Net interfund receipts/(payments)	-	-	-	-
Net component unit receipts/(payments)	-	-	-	-
b. Net cash provided by (or used for) noncapital financing activities	-	-	-	-
C. CASH FLOWS FROM CAPITAL AND RELATED FINANCING ACTIVITIES:				
SLFRF Recovery Grant	159,918	-	-	-
General Fund Contribution	-	158,554	42,772	42,772
c. Net cash provided by (or used for) capital and related financing activities	159,918	158,554	42,772	42,772
D. CASH FLOWS FROM INVESTING ACTIVITIES:				
d. Net cash provided by (or used in) investing activities	-	-	-	-
NET INCREASE (DECREASE) in cash and cash equivalents (a+b+c+d)	(27,479)	-	-	-
CASH AND CASH EQUIVALENTS AT JULY 1, 20xx	178,162	150,683	150,683	150,683
CASH AND CASH EQUIVALENTS AT JUNE 30, 20xx	150,683	150,683	150,683	150,683

City of West Wendover
(Local Government)

SCHEDULE F-2 STATEMENT OF CASH FLOWS

FUND **Health Insurance Fund**

ALL EXISTING OR PROPOSED
GENERAL OBLIGATION BONDS, REVENUE BONDS,
MEDIUM-TERM FINANCING, CAPITAL LEASES AND
SPECIAL ASSESSMENT BONDS

* - Type
1 - General Obligation Bonds
2 - G.O. Revenue Supported Bonds
3 - G.O. Special Assessment Bonds
4 - Revenue Bonds
5 - Medium-Term Financing
6 - Medium-Term Financing - Lease Purchase
7 - Capital Leases
8 - Special Assessment Bonds
9 - Mortgages
10 - Other (Specify Type)
11 - Proposed (Specify Type)

(1) NAME OF BOND OR LOAN List and Subtotal By Fund	(2) TYPE *	(3) TERM	(4) ORIGINAL AMOUNT OF ISSUE	(5) ISSUE DATE	(6) FINAL PAYMENT DATE	(7) INTEREST RATE	(8) BEGINNING OUTSTANDING BALANCE 7/1/2023	(9) REQUIREMENTS FOR FISCAL YEAR ENDING 06/30/24 INTEREST PAYABLE	(10) PRINCIPAL PAYABLE	(11) (9)+(10) TOTAL
FUND - Capital Projects							$	$	$	$
Government Complex Final Loan USDA	4	30	$ 5,225,000	8/18/2009	7/18/2039	4.375	$ 3,617,733	$ 155,562	$ 157,938	$ 313,500
							$ -	$ -	$ -	$ -
Fire Station-Interim Debenture	10	15 months	$ 8,906,800	3/30/2022	6/30/2024	2.476	$ 8,906,800	$ 309,957	$ -	$ 309,957
Downtown Dev-Interim Debentur	10	15 months	$ 5,789,400	9/15/2022	6/30/2025	4.570	$ 5,789,400	$ 264,575	$ -	$ 264,575
Florence Way Phase II *A	5	10	$ 1,839,000	7/14/2015	7/14/2025	2.260	$ 618,000	$ 11,718	$ 199,000	$ 210,718
Fire Station-USDA Loan	5	38	$ 8,906,800	1/1/2024	1/1/2062	3.875	$ -	$ 169,755	$ 54,699	$ 224,454
Downtown-USDA Loan	5	35	$ 2,000,000	2/1/2024	1/1/2059	2.125	$ -	$ 17,292	$ 16,508	$ 33,800
Downtown-USDA Loan	5	35	$ 2,414,400	2/1/2024	1/1/2059	3.875	$ -	$ 38,099	$ 14,536	$ 52,635
							$	$	$	$
FUND - General Government							$	$	$	$
Police Vehicles *A	5	7	361,000	7/14/2015	7/14/2022	2.260	$ -	$ -	$ -	$ -
*A Total	5	7	2,200,000	7/14/2015	7/14/2022	2.260	$	$	$	$
							$	$	$	$
TOTAL ALL DEBT SERVICE			$ 35,442,400				$ 18,931,933	$ 966,958	$ 442,681	$ 1,409,639
								$ 0	$ 0	

SCHEDULE C-1 - INDEBTEDNESS

City of West Wendover
(Local Government)

ALL EXISTING OR PROPOSED
GENERAL OBLIGATION BONDS, REVENUE BONDS,
MEDIUM-TERM FINANCING, CAPITAL LEASES AND
SPECIAL ASSESSMENT BONDS

* - Type
1 - General Obligation Bonds
2 - G.O. Revenue Supported Bonds
3 - G.O. Special Assessment Bonds
4 - Revenue Bonds
5 - Medium-Term Financing
6 - Medium-Term Financing - Lease Purchase
7 - Capital Leases
8 - Special Assessment Bonds
9 - Mortgages
10 - Other (Specify Type)
11 - Proposed (Specify Type)

(1) NAME OF BOND OR LOAN List and Subtotal By Fund	(2) TYPE *	(3) TERM	(4) ORIGINAL AMOUNT OF ISSUE	(5) ISSUE DATE	(6) FINAL PAYMENT DATE	(7) INTEREST RATE	(8) BEGINNING OUTSTANDING BALANCE 7/1/2023	(9) REQUIREMENTS FOR FISCAL YEAR ENDING 06/30/24 INTEREST PAYABLE	(10) PRINCIPAL PAYABLE	(11) (9)+(10) TOTAL
FUND - Water Fund							$	$	$	$
SRF Project	4	40	$ 747,000	10/8/2015	10/8/2055	2.625	$ 659,221	$ 17,224	$ 13,016	$ 30,240
Public Works Bldg-2	5	10	$ 701,400	6/17/2014	6/17/2024	2.430	$ 80,320	$ 2,090	$ 86,020	$ 88,110
							$	$	$	$
							$	$	$	$
Refinance Wendover Pipline	2	20	$ 2,173,729	8/15/2019	6/30/2039	3.000	$ 1,832,187	$ 39,034	$ 100,692	$ 139,727
							$	$	$	$
							$	$	$	$
							$	$	$	$
							$	$	$	$
							$	$	$	$
TOTAL ALL DEBT SERVICE			$ 3,622,129				$ 2,571,728	$ 58,349	$ 199,728	$258,076.87
								$ 0	$ 0	

SCHEDULE C-1 - INDEBTEDNESS

City of West Wendover
(Local Government)

Page: 44
Schedule C-1

ALL EXISTING OR PROPOSED
GENERAL OBLIGATION BONDS, REVENUE BONDS,
MEDIUM-TERM FINANCING, CAPITAL LEASES AND
SPECIAL ASSESSMENT BONDS

* - Type
1 - General Obligation Bonds
2 - G.O. Revenue Supported Bonds
3 - G.O. Special Assessment Bonds
4 - Revenue Bonds
5 - Medium-Term Financing
6 - Medium-Term Financing - Lease Purchase
7 - Capital Leases
8 - Special Assessment Bonds
9 - Mortgages
10 - Other (Specify Type)
11 - Proposed (Specify Type)

(1) NAME OF BOND OR LOAN List and Subtotal By Fund	(2) TYPE *	(3) TERM	(4) ORIGINAL AMOUNT OF ISSUE	(5) ISSUE DATE	(6) FINAL PAYMENT DATE	(7) INTEREST RATE	(8) BEGINNING OUTSTANDING BALANCE 7/1/2023	(9) REQUIREMENTS FOR FISCAL YEAR ENDING 06/30/24 INTEREST PAYABLE	(10) PRINCIPAL PAYABLE	(11) (9)+(10) TOTAL
FUND - Sewer Fund							$	$	$	$
Waste Water Treatment Plant	4	40	$ 2,637,000	5/16/2012	5/16/2052	2.750	$ 2,145,118	$ 58,641	$ 50,323	$ 108,964
							$	$	$	$
Public Works Bldg-2	5	10	$ 699,300	6/17/2014	6/17/2024	2.430	$ 86,340	$ 2,029	$ 83,490	$ 85,519
							$	$	$	$
							$	$	$	$
							$	$	$	$
							$	$	$	$
							$	$	$	$
							$	$	$	$
							$	$	$	$
							$	$	$	$
TOTAL ALL DEBT SERVICE			$ 3,336,300				$ 2,231,458	$ 60,670	$ 133,813	$ 194,483
								$ 0	$ 0	

SCHEDULE C-1 - INDEBTEDNESS

City of West Wendover
(Local Government)

Page: 45
Schedule C-1

ALL EXISTING OR PROPOSED
GENERAL OBLIGATION BONDS, REVENUE BONDS,
MEDIUM-TERM FINANCING, CAPITAL LEASES AND
SPECIAL ASSESSMENT BONDS

* - Type
1 - General Obligation Bonds
2 - G.O. Revenue Supported Bonds
3 - G.O. Special Assessment Bonds
4 - Revenue Bonds
5 - Medium-Term Financing
6 - Medium-Term Financing - Lease Purchase
7 - Capital Leases
8 - Special Assessment Bonds
9 - Mortgages
10 - Other (Specify Type)
11 - Proposed (Specify Type)

(1) NAME OF BOND OR LOAN List and Subtotal By Fund	(2) TYPE *	(3) TERM	(4) ORIGINAL AMOUNT OF ISSUE	(5) ISSUE DATE	(6) FINAL PAYMENT DATE	(7) INTEREST RATE	(8) BEGINNING OUTSTANDING BALANCE 7/1/2023	(9) REQUIREMENTS FOR FISCAL YEAR ENDING 06/30/24 INTEREST PAYABLE	(10) PRINCIPAL PAYABLE	(11) (9)+(10) TOTAL
FUND - Garbage / Compost							$	$	$	$
Caterpillar Loader -Landfill	7	5	$ 231,738	3/9/2018	3/9/2023	4.200	$ 0	$ -	$ -	$ -
Public Works Bldg-2	5	10	$ 699,300	6/17/2014	6/17/2024	2.430	$ 86,340	$ 2,029	$ 83,490	$ 85,519
FUND - Garbage / Compost							$	$	$	$
Garbage Trucks (2) Capital Lease	7	5	$ 464,990	7/1/2019	7/1/2024	4.900	$ 118,099	$ 2,860	$ 96,164	$ 99,024
							$	$	$	$
							$	$	$	$
							$	$	$	$
							$	$	$	$
							$	$	$	$
							$	$	$	$
TOTAL ALL DEBT SERVICE			$ 231,738				$ 204,439	$ 4,889	$ 179,654	$ 184,543
								$ (0)	$ -	

SCHEDULE C-1 - INDEBTEDNESS

City of West Wendover
(Local Government)

ALL EXISTING OR PROPOSED
GENERAL OBLIGATION BONDS, REVENUE BONDS,
MEDIUM-TERM FINANCING, CAPITAL LEASES AND
SPECIAL ASSESSMENT BONDS

* - Type
1 - General Obligation Bonds
2 - G.O. Revenue Supported Bonds
3 - G.O. Special Assessment Bonds
4 - Revenue Bonds
5 - Medium-Term Financing
6 - Medium-Term Financing - Lease Purchase
7 - Capital Leases
8 - Special Assessment Bonds
9 - Mortgages
10 - Other (Specify Type)
11 - Proposed (Specify Type)

(1) NAME OF BOND OR LOAN List and Subtotal By Fund	(2) TYPE *	(3) TERM	(4) ORIGINAL AMOUNT OF ISSUE	(5) ISSUE DATE	(6) FINAL PAYMENT DATE	(7) INTEREST RATE	(8) BEGINNING OUTSTANDING BALANCE 7/1/2023	(9) REQUIREMENTS FOR FISCAL YEAR ENDING 06/30/24 INTEREST PAYABLE	(10) PRINCIPAL PAYABLE	(11) (9)+(10) TOTAL
FUND - Johnson Springs							$	$	$	$
							$ -	$ -	$ -	$ -
							$	$	$	$
							$	$	$	$
							$	$	$	$
							$	$	$	$
							$	$	$	$
							$	$	$	$
							$	$	$	$
							$	$	$	$
							$	$	$	$
							$	$	$	$
							$	$	$	$
							$	$	$	$
							$	$	$	$
TOTAL ALL DEBT SERVICE			$ -				$ -	$ -	$ -	$ -
								$ -	$ -	

SCHEDULE C-1 - INDEBTEDNESS

City of West Wendover
(Local Government)

Page: 47
Schedule C-1

Transfer Schedule for Fiscal Year 2023-2024

TRANSFERS IN					TRANSFERS OUT		
FUND TYPE	FROM FUND	PAGE	AMOUNT		TO FUND	PAGE	AMOUNT
GENERAL FUND							
					Welcome Center Fund	22	136,227
					Wendover Will Landmark Fund	22	-
					Comm Supp & Local Schools Fund	22	94,248
					Grant Fund	22	50,000
SUBTOTAL			-				280,475
SPECIAL REVENUE FUNDS							
Grant Fund	General Fund	26	50,000				
Welcome Center Fund	General Fund	27	136,227				
Wendover Will Ladmark Fund	General Fund	28	-				
Comm Supp & Local Schools Fund	General Fund	29	94,248				
SUBTOTAL			280,475				-

City of West Wendover
(Local Government)

SCHEDULE T - TRANSFER RECONCILIATION

Page: 48
Schedule T

Transfer Schedule for Fiscal Year 2023-2024

TRANSFERS IN					TRANSFERS OUT		
FUND TYPE	FROM FUND	PAGE	AMOUNT		TO FUND	PAGE	AMOUNT
CAPITAL PROJECTS FUND							
Capital Projects Fund	Ad Valorem Fund	31	50,000		Capital Projects Fund	30	50,000
Capital Projects Fund	General Fund	31	609,664		Capital Projects Fund	22	609,664
SUBTOTAL			659,664				659,664
EXPENDABLE TRUST FUNDS							
SUBTOTAL			-				-
DEBT SERVICE							
SUBTOTAL			-				-

City of West Wendover
(Local Government)

SCHEDULE T - TRANSFER RECONCILIATION

Page: 49
Schedule T

	TRANSFERS IN				TRANSFERS OUT		
FUND TYPE	FROM FUND	PAGE	AMOUNT		TO FUND	PAGE	AMOUNT
ENTERPRISE FUNDS							
SUBTOTAL			-				-
INTERNAL SERVICE							
			-				-
SUBTOTAL			-				-
RESIDUAL EQUITY TRANSFERS							
SUBTOTAL			-				-
TOTAL TRANSFERS			940,139				940,139

City of West Wendover
(Local Government)

SCHEDULE T - TRANSFER RECONCILIATION

SCHEDULE OF EXISTING CONTRACTS
Budget Year 2023-2024

Local Government: City of West Wendover
Contact: Alina Ceballos
E-mail Address: aceballos@westwendovercity.com
Daytime Telephone: (775) 664-3081

Total Number of Existing Contracts: 1

Line	Vendor	Effective Date of Contract	Termination Date of Contract	Proposed Expenditure FY 2023-24	Proposed Expenditure FY 2024-25	Reason or need for contract:
1	*Hinton Burdick*	*2/27/2023*	*6/30/2027*	*$ 53,600.00*	*$ 55,300.00*	External audits of financials for FY2024-FY2025
2	*Hinton Burdick*	*2/27/2023*	*6/30/2027*	*$ 4,100.00*	*$ 4,200.00*	External single audits of financials for FY2024-FY2025
3						One contract for the above listed audits of financials.
4						
5						
6						
7						
8						
9						
10						
11						
12						
13						
14						
15						
16						
17						
18						
19						
20	Total Proposed Expenditures					

Additional Explanations (Reference Line Number and Vendor):

Schedule of Privatization Contracts
Budget Year 2022-2023

Local Government: City of West Wendover
Contact: Alina Ceballos
E-mail Address: aceballos@westwendovercity.com
Daytime Telephone: 775-664-3081

Total Number of Privatization Contracts: 0

Line	Vendor	Effective Date of Contract	Termination Date of Contract	Duration (Months/ Years)	Proposed Expenditure FY 2023-24	Proposed Expenditure FY 2024-25	Position Class or Grade	Number of FTEs employed by Position Class or Grade	Equivalent hourly wage of FTEs by Position Class or Grade	Reason or need for contract:
1	*N/A*									
2										
3										
4										
5										
6										
7										
8	Total									

Attach additional sheets if necessary.

EXHIBIT 10

OUTSTANDING FINANCING OBLIGATIONS
SECURED BY SOURCE OF REPAYMENT FOR REQUESTED FINANCING

Outstanding Balances Updated According to June 30, 2023

Name of Lender	Date of Debt	Outstanding Balance as of June 30, 2023	Maximum Annual Debt Service/Lease Payment	Retire Date	
USDA - GO Medium Term Sales Tax Revenue Bond, Series 2009	08-18-2009	3,617,732.92	313,500.00	08/18/2039	(1)
Pinnacle - GO Medium Term Bond Series 2015	07-14-2015	618,000.00	210,718.10	07/01/2025	(2)
Western Alliance Business Trust - Interim Debenture (Fixed Rate)	03-30-2022	8,906,800.00	Interest Only - based on draws made	When project is complete	(3)
Western Alliance Business Trust - Interim Debenture (Fixed Rate)	09-15-2022	5,789,400.00	Interest Only - based on draws made	When project is complete	(3)
OFF-BALANCE-SHEET					
USDA Commitment (Fire Station/EOC)	**Unknown**	**Commitment for $8,906,800**	**448,908.00**	**38 Yr Loan**	
USDA Commitment (Downtown Inf Phase 1)	**2nd Q FY24**	**Commitment for $2,414,400**	**126,324.00**	**35 Yr Loan**	
USDA Commitment (Downtown Inf Phase 1)	**2nd Q FY24**	**Commitment for $2,000,000**	**81,120.00**	**35 Yr Loan**	

(1) USDA Series 2009 Bond is for the City Hall/Government Complex

(2) GO Medium Term Obligation Series 2015 is funded by general fund revenue sources including but not solely from property taxes

(3) OFF-BALANCE-SHEET: USDA Commitments are made to close out the two (2) Interim Debentures by Western Alliance Business Trust once the related projects (Fire Station/EOC and Downtown Infrastructure Phase 1) are complete per the USDA Letter of Conditions

USDA

LOAN 97-19

SERIES 2009

$5,225,000

AUGUST 18, 2009

FIRST AMORTIZATION SCHEDULE

$5,225,000

City of West Wendover, Nevada
Sales Tax Revenue Bonds
Series 2009

Debt Service Schedule

Date	Principal	Coupon	Interest	Total P+I	Fiscal Total
08/18/2009	-	-	-	-	-
09/18/2009	7,075.52	4.375%	19,049.48	26,125.00	-
10/18/2009	7,101.32	4.375%	19,023.68	26,125.00	-
11/18/2009	7,127.21	4.375%	18,997.79	26,125.00	-
12/18/2009	7,153.19	4.375%	18,971.81	26,125.00	-
01/18/2010	7,179.27	4.375%	18,945.73	26,125.00	-
02/18/2010	7,205.45	4.375%	18,919.55	26,125.00	-
03/18/2010	7,231.72	4.375%	18,893.28	26,125.00	-
04/18/2010	7,258.08	4.375%	18,866.92	26,125.00	-
05/18/2010	7,284.54	4.375%	18,840.46	26,125.00	-
06/18/2010	7,311.10	4.375%	18,813.90	26,125.00	-
06/30/2010	-	-	-	-	261,250.00
07/18/2010	7,337.76	4.375%	18,787.24	26,125.00	-
08/18/2010	7,364.51	4.375%	18,760.49	26,125.00	-
09/18/2010	7,391.36	4.375%	18,733.64	26,125.00	-
10/18/2010	7,418.31	4.375%	18,706.69	26,125.00	-
11/18/2010	7,445.35	4.375%	18,679.65	26,125.00	-
12/18/2010	7,472.50	4.375%	18,652.50	26,125.00	-
01/18/2011	7,499.74	4.375%	18,625.26	26,125.00	-
02/18/2011	7,527.08	4.375%	18,597.92	26,125.00	-
03/18/2011	7,554.52	4.375%	18,570.48	26,125.00	-
04/18/2011	7,582.07	4.375%	18,542.93	26,125.00	-
05/18/2011	7,609.71	4.375%	18,515.29	26,125.00	-
06/18/2011	7,637.45	4.375%	18,487.55	26,125.00	-
06/30/2011	-	-	-	-	313,500.00
07/18/2011	7,665.30	4.375%	18,459.70	26,125.00	-
08/18/2011	7,693.25	4.375%	18,431.75	26,125.00	-
09/18/2011	7,721.29	4.375%	18,403.71	26,125.00	-
10/18/2011	7,749.44	4.375%	18,375.56	26,125.00	-
11/18/2011	7,777.70	4.375%	18,347.30	26,125.00	-
12/18/2011	7,806.05	4.375%	18,318.95	26,125.00	-
01/18/2012	7,834.51	4.375%	18,290.49	26,125.00	-
02/18/2012	7,863.08	4.375%	18,261.92	26,125.00	-
03/18/2012	7,891.74	4.375%	18,233.26	26,125.00	-
04/18/2012	7,920.52	4.375%	18,204.48	26,125.00	-
05/18/2012	7,949.39	4.375%	18,175.61	26,125.00	-
06/18/2012	7,978.38	4.375%	18,146.62	26,125.00	-
06/30/2012	-	-	-	-	313,500.00
07/18/2012	8,007.46	4.375%	18,117.54	26,125.00	-
08/18/2012	8,036.66	4.375%	18,088.34	26,125.00	-
09/18/2012	8,065.96	4.375%	18,059.04	26,125.00	-

$5,225,000

City of West Wendover, Nevada
Sales Tax Revenue Bonds
Series 2009

Debt Service Schedule

Date	Principal	Coupon	Interest	Total P+I	Fiscal Total
10/18/2012	8,095.36	4.375%	18,029.64	26,125.00	-
11/18/2012	8,124.88	4.375%	18,000.12	26,125.00	-
12/18/2012	8,154.50	4.375%	17,970.50	26,125.00	-
01/18/2013	8,184.23	4.375%	17,940.77	26,125.00	-
02/18/2013	8,214.07	4.375%	17,910.93	26,125.00	-
03/18/2013	8,244.02	4.375%	17,880.98	26,125.00	-
04/18/2013	8,274.07	4.375%	17,850.93	26,125.00	-
05/18/2013	8,304.24	4.375%	17,820.76	26,125.00	-
06/18/2013	8,334.51	4.375%	17,790.49	26,125.00	-
06/30/2013	-	-	-	-	313,500.00
07/18/2013	8,364.90	4.375%	17,760.10	26,125.00	-
08/18/2013	8,395.40	4.375%	17,729.60	26,125.00	-
09/18/2013	8,426.01	4.375%	17,698.99	26,125.00	-
10/18/2013	8,456.73	4.375%	17,668.27	26,125.00	-
11/18/2013	8,487.56	4.375%	17,637.44	26,125.00	-
12/18/2013	8,518.50	4.375%	17,606.50	26,125.00	-
01/18/2014	8,549.56	4.375%	17,575.44	26,125.00	-
02/18/2014	8,580.73	4.375%	17,544.27	26,125.00	-
03/18/2014	8,612.01	4.375%	17,512.99	26,125.00	-
04/18/2014	8,643.41	4.375%	17,481.59	26,125.00	-
05/18/2014	8,674.92	4.375%	17,450.08	26,125.00	-
06/18/2014	8,706.55	4.375%	17,418.45	26,125.00	-
06/30/2014	-	-	-	-	313,500.00
07/18/2014	8,738.29	4.375%	17,386.71	26,125.00	-
08/18/2014	8,770.15	4.375%	17,354.85	26,125.00	-
09/18/2014	8,802.13	4.375%	17,322.87	26,125.00	-
10/18/2014	8,834.22	4.375%	17,290.78	26,125.00	-
11/18/2014	8,866.42	4.375%	17,258.58	26,125.00	-
12/18/2014	8,898.75	4.375%	17,226.25	26,125.00	-
01/18/2015	8,931.19	4.375%	17,193.81	26,125.00	-
02/18/2015	8,963.76	4.375%	17,161.24	26,125.00	-
03/18/2015	8,996.44	4.375%	17,128.56	26,125.00	-
04/18/2015	9,029.24	4.375%	17,095.76	26,125.00	-
05/18/2015	9,062.15	4.375%	17,062.85	26,125.00	-
06/18/2015	9,095.19	4.375%	17,029.81	26,125.00	-
06/30/2015	-	-	-	-	313,500.00
07/18/2015	9,128.35	4.375%	16,996.65	26,125.00	-
08/18/2015	9,161.63	4.375%	16,963.37	26,125.00	-
09/18/2015	9,195.04	4.375%	16,929.96	26,125.00	-
10/18/2015	9,228.56	4.375%	16,896.44	26,125.00	-
11/18/2015	9,262.20	4.375%	16,862.80	26,125.00	-

$5,225,000

City of West Wendover, Nevada
Sales Tax Revenue Bonds
Series 2009

Debt Service Schedule

Date	Principal	Coupon	Interest	Total P+I	Fiscal Total
12/18/2015	9,295.97	4.375%	16,829.03	26,125.00	-
01/18/2016	9,329.86	4.375%	16,795.14	26,125.00	-
02/18/2016	9,363.88	4.375%	16,761.12	26,125.00	-
03/18/2016	9,398.02	4.375%	16,726.98	26,125.00	-
04/18/2016	9,432.28	4.375%	16,692.72	26,125.00	-
05/18/2016	9,466.67	4.375%	16,658.33	26,125.00	-
06/18/2016	9,501.19	4.375%	16,623.81	26,125.00	-
06/30/2016	-	-	-	-	313,500.00
07/18/2016	9,535.82	4.375%	16,589.18	26,125.00	-
08/18/2016	9,570.59	4.375%	16,554.41	26,125.00	-
09/18/2016	9,605.48	4.375%	16,519.52	26,125.00	-
10/18/2016	9,640.50	4.375%	16,484.50	26,125.00	-
11/18/2016	9,675.65	4.375%	16,449.35	26,125.00	-
12/18/2016	9,710.93	4.375%	16,414.07	26,125.00	-
01/18/2017	9,746.33	4.375%	16,378.67	26,125.00	-
02/18/2017	9,781.86	4.375%	16,343.14	26,125.00	-
03/18/2017	9,817.53	4.375%	16,307.47	26,125.00	-
04/18/2017	9,853.32	4.375%	16,271.68	26,125.00	-
05/18/2017	9,889.24	4.375%	16,235.76	26,125.00	-
06/18/2017	9,925.30	4.375%	16,199.70	26,125.00	-
06/30/2017	-	-	-	-	313,500.00
07/18/2017	9,961.49	4.375%	16,163.51	26,125.00	-
08/18/2017	9,997.80	4.375%	16,127.20	26,125.00	-
09/18/2017	10,034.25	4.375%	16,090.75	26,125.00	-
10/18/2017	10,070.84	4.375%	16,054.16	26,125.00	-
11/18/2017	10,107.55	4.375%	16,017.45	26,125.00	-
12/18/2017	10,144.40	4.375%	15,980.60	26,125.00	-
01/18/2018	10,181.39	4.375%	15,943.61	26,125.00	-
02/18/2018	10,218.51	4.375%	15,906.49	26,125.00	-
03/18/2018	10,255.76	4.375%	15,869.24	26,125.00	-
04/18/2018	10,293.15	4.375%	15,831.85	26,125.00	-
05/18/2018	10,330.68	4.375%	15,794.32	26,125.00	-
06/18/2018	10,368.34	4.375%	15,756.66	26,125.00	-
06/30/2018	-	-	-	-	313,500.00
07/18/2018	10,406.15	4.375%	15,718.85	26,125.00	-
08/18/2018	10,444.09	4.375%	15,680.91	26,125.00	-
09/18/2018	10,482.16	4.375%	15,642.84	26,125.00	-
10/18/2018	10,520.38	4.375%	15,604.62	26,125.00	-
11/18/2018	10,558.73	4.375%	15,566.27	26,125.00	-
12/18/2018	10,597.23	4.375%	15,527.77	26,125.00	-
01/18/2019	10,635.87	4.375%	15,489.13	26,125.00	-

$5,225,000

City of West Wendover, Nevada
Sales Tax Revenue Bonds
Series 2009

Debt Service Schedule

Date	Principal	Coupon	Interest	Total P+I	Fiscal Total
02/18/2019	10,674.64	4.375%	15,450.36	26,125.00	-
03/18/2019	10,713.56	4.375%	15,411.44	26,125.00	-
04/18/2019	10,752.62	4.375%	15,372.38	26,125.00	-
05/18/2019	10,791.82	4.375%	15,333.18	26,125.00	-
06/18/2019	10,831.17	4.375%	15,293.83	26,125.00	-
06/30/2019	FY 20 -	-	FY20 -	-	313,500.00
07/18/2019	10,870.66	4.375%	15,254.34	26,125.00	-
08/18/2019	10,910.29	4.375%	15,214.71	26,125.00	-
09/18/2019	10,950.07	4.375%	15,174.93	26,125.00	-
10/18/2019	10,989.99	4.375%	15,135.01	26,125.00	-
11/18/2019	11,030.06	4.375%	15,094.94	26,125.00	-
12/18/2019	11,070.27	4.375%	15,054.73	26,125.00	-
01/18/2020	11,110.63	4.375%	15,014.37	26,125.00	-
02/18/2020	11,151.14	4.375%	14,973.86	26,125.00	-
03/18/2020	11,191.79	4.375%	14,933.21	26,125.00	-
04/18/2020	11,232.60	4.375%	14,892.40	26,125.00	-
05/18/2020	11,273.55	4.375%	14,851.45	26,125.00	-
06/18/2020	11,314.65	4.375%	14,810.35	26,125.00	-
06/30/2020	-	-	-	-	313,500.00
07/18/2020	11,355.90	4.375%	14,769.10	26,125.00	-
08/18/2020	11,397.30	4.375%	14,727.70	26,125.00	-
09/18/2020	11,438.86	4.375%	14,686.14	26,125.00	-
10/18/2020	11,480.56	4.375%	14,644.44	26,125.00	-
11/18/2020	11,522.42	4.375%	14,602.58	26,125.00	-
12/18/2020	11,564.42	4.375%	14,560.58	26,125.00	-
01/18/2021	11,606.59	4.375%	14,518.41	26,125.00	-
02/18/2021	11,648.90	4.375%	14,476.10	26,125.00	-
03/18/2021	11,691.37	4.375%	14,433.63	26,125.00	-
04/18/2021	11,734.00	4.375%	14,391.00	26,125.00	-
05/18/2021	11,776.78	4.375%	14,348.22	26,125.00	-
06/18/2021	11,819.71	4.375%	14,305.29	26,125.00	-
06/30/2021	-	-	-	-	313,500.00
07/18/2021	11,862.81	4.375%	14,262.19	26,125.00	-
08/18/2021	11,906.06	4.375%	14,218.94	26,125.00	-
09/18/2021	11,949.46	4.375%	14,175.54	26,125.00	-
10/18/2021	11,993.03	4.375%	14,131.97	26,125.00	-
11/18/2021	12,036.75	4.375%	14,088.25	26,125.00	-
12/18/2021	12,080.64	4.375%	14,044.36	26,125.00	-
01/18/2022	12,124.68	4.375%	14,000.32	26,125.00	-
02/18/2022	12,168.89	4.375%	13,956.11	26,125.00	-
03/18/2022	12,213.25	4.375%	13,911.75	26,125.00	-

$5,225,000

City of West Wendover, Nevada
Sales Tax Revenue Bonds
Series 2009

Debt Service Schedule

Date	Principal	Coupon	Interest	Total P+I	Fiscal Total
04/18/2022	12,257.78	4.375%	13,867.22	26,125.00	-
05/18/2022	12,302.47	4.375%	13,822.53	26,125.00	-
06/18/2022	12,347.32	4.375%	13,777.68	26,125.00	-
06/30/2022	-	-	-	-	313,500.00
07/18/2022	12,392.34	4.375%	13,732.66	26,125.00	-
08/18/2022	12,437.52	4.375%	13,687.48	26,125.00	-
09/18/2022	12,482.86	4.375%	13,642.14	26,125.00	-
10/18/2022	12,528.37	4.375%	13,596.63	26,125.00	-
11/18/2022	12,574.05	4.375%	13,550.95	26,125.00	-
12/18/2022	12,619.89	4.375%	13,505.11	26,125.00	-
01/18/2023	12,665.90	4.375%	13,459.10	26,125.00	-
02/18/2023	12,712.08	4.375%	13,412.92	26,125.00	-
03/18/2023	12,758.43	4.375%	13,366.57	26,125.00	-
04/18/2023	12,804.94	4.375%	13,320.06	26,125.00	-
05/18/2023	12,851.63	4.375%	13,273.37	26,125.00	-
06/18/2023	12,898.48	4.375%	13,226.52	26,125.00	-
06/30/2023	-	-	-	-	313,500.00
07/18/2023	12,945.51	4.375%	13,179.49	26,125.00	-
08/18/2023	12,992.70	4.375%	13,132.30	26,125.00	-
09/18/2023	13,040.07	4.375%	13,084.93	26,125.00	-
10/18/2023	13,087.62	4.375%	13,037.38	26,125.00	-
11/18/2023	13,135.33	4.375%	12,989.67	26,125.00	-
12/18/2023	13,183.22	4.375%	12,941.78	26,125.00	-
01/18/2024	13,231.28	4.375%	12,893.72	26,125.00	-
02/18/2024	13,279.52	4.375%	12,845.48	26,125.00	-
03/18/2024	13,327.94	4.375%	12,797.06	26,125.00	-
04/18/2024	13,376.53	4.375%	12,748.47	26,125.00	-
05/18/2024	13,425.30	4.375%	12,699.70	26,125.00	-
06/18/2024	13,474.24	4.375%	12,650.76	26,125.00	-
06/30/2024	-	-	-	-	313,500.00
07/18/2024	13,523.37	4.375%	12,601.63	26,125.00	-
08/18/2024	13,572.67	4.375%	12,552.33	26,125.00	-
09/18/2024	13,622.16	4.375%	12,502.84	26,125.00	-
10/18/2024	13,671.82	4.375%	12,453.18	26,125.00	-
11/18/2024	13,721.67	4.375%	12,403.33	26,125.00	-
12/18/2024	13,771.69	4.375%	12,353.31	26,125.00	-
01/18/2025	13,821.90	4.375%	12,303.10	26,125.00	-
02/18/2025	13,872.29	4.375%	12,252.71	26,125.00	-
03/18/2025	13,922.87	4.375%	12,202.13	26,125.00	-
04/18/2025	13,973.63	4.375%	12,151.37	26,125.00	-
05/18/2025	14,024.58	4.375%	12,100.42	26,125.00	-

$5,225,000

City of West Wendover, Nevada
Sales Tax Revenue Bonds
Series 2009

Debt Service Schedule

Date	Principal	Coupon	Interest	Total P+I	Fiscal Total
06/18/2025	14,075.71	4.375%	12,049.29	26,125.00	-
06/30/2025	-	-	-	-	313,500.00
07/18/2025	14,127.03	4.375%	11,997.97	26,125.00	-
08/18/2025	14,178.53	4.375%	11,946.47	26,125.00	-
09/18/2025	14,230.22	4.375%	11,894.78	26,125.00	-
10/18/2025	14,282.10	4.375%	11,842.90	26,125.00	-
11/18/2025	14,334.17	4.375%	11,790.83	26,125.00	-
12/18/2025	14,386.43	4.375%	11,738.57	26,125.00	-
01/18/2026	14,438.89	4.375%	11,686.11	26,125.00	-
02/18/2026	14,491.53	4.375%	11,633.47	26,125.00	-
03/18/2026	14,544.36	4.375%	11,580.64	26,125.00	-
04/18/2026	14,597.39	4.375%	11,527.61	26,125.00	-
05/18/2026	14,650.61	4.375%	11,474.39	26,125.00	-
06/18/2026	14,704.02	4.375%	11,420.98	26,125.00	-
06/30/2026	-	-	-	-	313,500.00
07/18/2026	14,757.63	4.375%	11,367.37	26,125.00	-
08/18/2026	14,811.43	4.375%	11,313.57	26,125.00	-
09/18/2026	14,865.43	4.375%	11,259.57	26,125.00	-
10/18/2026	14,919.63	4.375%	11,205.37	26,125.00	-
11/18/2026	14,974.02	4.375%	11,150.98	26,125.00	-
12/18/2026	15,028.62	4.375%	11,096.38	26,125.00	-
01/18/2027	15,083.41	4.375%	11,041.59	26,125.00	-
02/18/2027	15,138.40	4.375%	10,986.60	26,125.00	-
03/18/2027	15,193.59	4.375%	10,931.41	26,125.00	-
04/18/2027	15,248.99	4.375%	10,876.01	26,125.00	-
05/18/2027	15,304.58	4.375%	10,820.42	26,125.00	-
06/18/2027	15,360.38	4.375%	10,764.62	26,125.00	-
06/30/2027	-	-	-	-	313,500.00
07/18/2027	15,416.38	4.375%	10,708.62	26,125.00	-
08/18/2027	15,472.59	4.375%	10,652.41	26,125.00	-
09/18/2027	15,529.00	4.375%	10,596.00	26,125.00	-
10/18/2027	15,585.61	4.375%	10,539.39	26,125.00	-
11/18/2027	15,642.43	4.375%	10,482.57	26,125.00	-
12/18/2027	15,699.46	4.375%	10,425.54	26,125.00	-
01/18/2028	15,756.70	4.375%	10,368.30	26,125.00	-
02/18/2028	15,814.15	4.375%	10,310.85	26,125.00	-
03/18/2028	15,871.80	4.375%	10,253.20	26,125.00	-
04/18/2028	15,929.67	4.375%	10,195.33	26,125.00	-
05/18/2028	15,987.75	4.375%	10,137.25	26,125.00	-
06/18/2028	16,046.04	4.375%	10,078.96	26,125.00	-
06/30/2028	-	-	-	-	313,500.00

$5,225,000

City of West Wendover, Nevada
Sales Tax Revenue Bonds
Series 2009

Debt Service Schedule

Date	Principal	Coupon	Interest	Total P+I	Fiscal Total
07/18/2028	16,104.54	4.375%	10,020.46	26,125.00	-
08/18/2028	16,163.25	4.375%	9,961.75	26,125.00	-
09/18/2028	16,222.18	4.375%	9,902.82	26,125.00	-
10/18/2028	16,281.32	4.375%	9,843.68	26,125.00	-
11/18/2028	16,340.68	4.375%	9,784.32	26,125.00	-
12/18/2028	16,400.26	4.375%	9,724.74	26,125.00	-
01/18/2029	16,460.05	4.375%	9,664.95	26,125.00	-
02/18/2029	16,520.06	4.375%	9,604.94	26,125.00	-
03/18/2029	16,580.29	4.375%	9,544.71	26,125.00	-
04/18/2029	16,640.74	4.375%	9,484.26	26,125.00	-
05/18/2029	16,701.41	4.375%	9,423.59	26,125.00	-
06/18/2029	16,762.30	4.375%	9,362.70	26,125.00	-
06/30/2029	-	-	-	-	313,500.00
07/18/2029	16,823.41	4.375%	9,301.59	26,125.00	-
08/18/2029	16,884.75	4.375%	9,240.25	26,125.00	-
09/18/2029	16,946.31	4.375%	9,178.69	26,125.00	-
10/18/2029	17,008.09	4.375%	9,116.91	26,125.00	-
11/18/2029	17,070.10	4.375%	9,054.90	26,125.00	-
12/18/2029	17,132.33	4.375%	8,992.67	26,125.00	-
01/18/2030	17,194.79	4.375%	8,930.21	26,125.00	-
02/18/2030	17,257.48	4.375%	8,867.52	26,125.00	-
03/18/2030	17,320.40	4.375%	8,804.60	26,125.00	-
04/18/2030	17,383.55	4.375%	8,741.45	26,125.00	-
05/18/2030	17,446.93	4.375%	8,678.07	26,125.00	-
06/18/2030	17,510.54	4.375%	8,614.46	26,125.00	-
06/30/2030	-	-	-	-	313,500.00
07/18/2030	17,574.38	4.375%	8,550.62	26,125.00	-
08/18/2030	17,638.45	4.375%	8,486.55	26,125.00	-
09/18/2030	17,702.76	4.375%	8,422.24	26,125.00	-
10/18/2030	17,767.30	4.375%	8,357.70	26,125.00	-
11/18/2030	17,832.07	4.375%	8,292.93	26,125.00	-
12/18/2030	17,897.09	4.375%	8,227.91	26,125.00	-
01/18/2031	17,962.34	4.375%	8,162.66	26,125.00	-
02/18/2031	18,027.82	4.375%	8,097.18	26,125.00	-
03/18/2031	18,093.55	4.375%	8,031.45	26,125.00	-
04/18/2031	18,159.52	4.375%	7,965.48	26,125.00	-
05/18/2031	18,225.72	4.375%	7,899.28	26,125.00	-
06/18/2031	18,292.17	4.375%	7,832.83	26,125.00	-
06/30/2031	-	-	-	-	313,500.00
07/18/2031	18,358.86	4.375%	7,766.14	26,125.00	-
08/18/2031	18,425.79	4.375%	7,699.21	26,125.00	-

$5,225,000

City of West Wendover, Nevada
Sales Tax Revenue Bonds
Series 2009

Debt Service Schedule

Date	Principal	Coupon	Interest	Total P+I	Fiscal Total
09/18/2031	18,492.97	4.375%	7,632.03	26,125.00	-
10/18/2031	18,560.39	4.375%	7,564.61	26,125.00	-
11/18/2031	18,628.06	4.375%	7,496.94	26,125.00	-
12/18/2031	18,695.98	4.375%	7,429.02	26,125.00	-
01/18/2032	18,764.14	4.375%	7,360.86	26,125.00	-
02/18/2032	18,832.55	4.375%	7,292.45	26,125.00	-
03/18/2032	18,901.21	4.375%	7,223.79	26,125.00	-
04/18/2032	18,970.12	4.375%	7,154.88	26,125.00	-
05/18/2032	19,039.28	4.375%	7,085.72	26,125.00	-
06/18/2032	19,108.70	4.375%	7,016.30	26,125.00	-
06/30/2032	-	-	-	-	313,500.00
07/18/2032	19,178.36	4.375%	6,946.64	26,125.00	-
08/18/2032	19,248.29	4.375%	6,876.71	26,125.00	-
09/18/2032	19,318.46	4.375%	6,806.54	26,125.00	-
10/18/2032	19,388.89	4.375%	6,736.11	26,125.00	-
11/18/2032	19,459.58	4.375%	6,665.42	26,125.00	-
12/18/2032	19,530.53	4.375%	6,594.47	26,125.00	-
01/18/2033	19,601.73	4.375%	6,523.27	26,125.00	-
02/18/2033	19,673.20	4.375%	6,451.80	26,125.00	-
03/18/2033	19,744.92	4.375%	6,380.08	26,125.00	-
04/18/2033	19,816.91	4.375%	6,308.09	26,125.00	-
05/18/2033	19,889.16	4.375%	6,235.84	26,125.00	-
06/18/2033	19,961.67	4.375%	6,163.33	26,125.00	-
06/30/2033	-	-	-	-	313,500.00
07/18/2033	20,034.45	4.375%	6,090.55	26,125.00	-
08/18/2033	20,107.49	4.375%	6,017.51	26,125.00	-
09/18/2033	20,180.80	4.375%	5,944.20	26,125.00	-
10/18/2033	20,254.38	4.375%	5,870.62	26,125.00	-
11/18/2033	20,328.22	4.375%	5,796.78	26,125.00	-
12/18/2033	20,402.33	4.375%	5,722.67	26,125.00	-
01/18/2034	20,476.72	4.375%	5,648.28	26,125.00	-
02/18/2034	20,551.37	4.375%	5,573.63	26,125.00	-
03/18/2034	20,626.30	4.375%	5,498.70	26,125.00	-
04/18/2034	20,701.50	4.375%	5,423.50	26,125.00	-
05/18/2034	20,776.97	4.375%	5,348.03	26,125.00	-
06/18/2034	20,852.72	4.375%	5,272.28	26,125.00	-
06/30/2034	-	-	-	-	313,500.00
07/18/2034	20,928.75	4.375%	5,196.25	26,125.00	-
08/18/2034	21,005.05	4.375%	5,119.95	26,125.00	-
09/18/2034	21,081.63	4.375%	5,043.37	26,125.00	-
10/18/2034	21,158.49	4.375%	4,966.51	26,125.00	-

$5,225,000

City of West Wendover, Nevada
Sales Tax Revenue Bonds
Series 2009

Debt Service Schedule

Date	Principal	Coupon	Interest	Total P+I	Fiscal Total
11/18/2034	21,235.63	4.375%	4,889.37	26,125.00	-
12/18/2034	21,313.05	4.375%	4,811.95	26,125.00	-
01/18/2035	21,390.76	4.375%	4,734.24	26,125.00	-
02/18/2035	21,468.74	4.375%	4,656.26	26,125.00	-
03/18/2035	21,547.02	4.375%	4,577.98	26,125.00	-
04/18/2035	21,625.57	4.375%	4,499.43	26,125.00	-
05/18/2035	21,704.42	4.375%	4,420.58	26,125.00	-
06/18/2035	21,783.55	4.375%	4,341.45	26,125.00	-
06/30/2035	-	-	-	-	313,500.00
07/18/2035	21,862.96	4.375%	4,262.04	26,125.00	-
08/18/2035	21,942.67	4.375%	4,182.33	26,125.00	-
09/18/2035	22,022.67	4.375%	4,102.33	26,125.00	-
10/18/2035	22,102.96	4.375%	4,022.04	26,125.00	-
11/18/2035	22,183.55	4.375%	3,941.45	26,125.00	-
12/18/2035	22,264.43	4.375%	3,860.57	26,125.00	-
01/18/2036	22,345.60	4.375%	3,779.40	26,125.00	-
02/18/2036	22,427.07	4.375%	3,697.93	26,125.00	-
03/18/2036	22,508.83	4.375%	3,616.17	26,125.00	-
04/18/2036	22,590.89	4.375%	3,534.11	26,125.00	-
05/18/2036	22,673.26	4.375%	3,451.74	26,125.00	-
06/18/2036	22,755.92	4.375%	3,369.08	26,125.00	-
06/30/2036	-	-	-	-	313,500.00
07/18/2036	22,838.88	4.375%	3,286.12	26,125.00	-
08/18/2036	22,922.15	4.375%	3,202.85	26,125.00	-
09/18/2036	23,005.72	4.375%	3,119.28	26,125.00	-
10/18/2036	23,089.60	4.375%	3,035.40	26,125.00	-
11/18/2036	23,173.78	4.375%	2,951.22	26,125.00	-
12/18/2036	23,258.27	4.375%	2,866.73	26,125.00	-
01/18/2037	23,343.06	4.375%	2,781.94	26,125.00	-
02/18/2037	23,428.17	4.375%	2,696.83	26,125.00	-
03/18/2037	23,513.58	4.375%	2,611.42	26,125.00	-
04/18/2037	23,599.31	4.375%	2,525.69	26,125.00	-
05/18/2037	23,685.35	4.375%	2,439.65	26,125.00	-
06/18/2037	23,771.70	4.375%	2,353.30	26,125.00	-
06/30/2037	-	-	-	-	313,500.00
07/18/2037	23,858.37	4.375%	2,266.63	26,125.00	-
08/18/2037	23,945.35	4.375%	2,179.65	26,125.00	-
09/18/2037	24,032.65	4.375%	2,092.35	26,125.00	-
10/18/2037	24,120.27	4.375%	2,004.73	26,125.00	-
11/18/2037	24,208.21	4.375%	1,916.79	26,125.00	-
12/18/2037	24,296.47	4.375%	1,828.53	26,125.00	-

$5,225,000

City of West Wendover, Nevada
Sales Tax Revenue Bonds
Series 2009

Debt Service Schedule

Date	Principal	Coupon	Interest	Total P+I	Fiscal Total
01/18/2038	24,385.05	4.375%	1,739.95	26,125.00	-
02/18/2038	24,473.95	4.375%	1,651.05	26,125.00	-
03/18/2038	24,563.18	4.375%	1,561.82	26,125.00	-
04/18/2038	24,652.73	4.375%	1,472.27	26,125.00	-
05/18/2038	24,742.61	4.375%	1,382.39	26,125.00	-
06/18/2038	24,832.82	4.375%	1,292.18	26,125.00	-
06/30/2038	-	-	-	-	313,500.00
07/18/2038	24,923.36	4.375%	1,201.64	26,125.00	-
08/18/2038	25,014.22	4.375%	1,110.78	26,125.00	-
09/18/2038	25,105.42	4.375%	1,019.58	26,125.00	-
10/18/2038	25,196.95	4.375%	928.05	26,125.00	-
11/18/2038	25,288.82	4.375%	836.18	26,125.00	-
12/18/2038	25,381.01	4.375%	743.99	26,125.00	-
01/18/2039	25,473.55	4.375%	651.45	26,125.00	-
02/18/2039	25,566.42	4.375%	558.58	26,125.00	-
03/18/2039	25,659.63	4.375%	465.37	26,125.00	-
04/18/2039	25,753.18	4.375%	371.82	26,125.00	-
05/18/2039	25,847.08	4.375%	277.92	26,125.00	-
06/18/2039	25,941.31	4.375%	183.69	26,125.00	-
06/30/2039	-	-	-	-	313,500.00
07/18/2039	24,442.31	4.375%	89.11	24,531.42	-
06/30/2040	-	-	-	-	24,531.42
Total	**$5,224,999.98**	-	**$4,152,281.44**	**$9,377,281.42**	-

Yield Statistics

Bond Year Dollars	$94,909.29
Average Life	18.164 Years
Average Coupon	4.3750000%
Net Interest Cost (NIC)	4.3750000%
True Interest Cost (TIC)	4.4150707%
Bond Yield for Arbitrage Purposes	4.4150707%
All Inclusive Cost (AIC)	4.4150707%

IRS Form 8038

Net Interest Cost	4.3750000%
Weighted Average Maturity	18.164 Years

REVISED AMORTIZATION SCHEDULE

Monthly Amortization Factor & Amortization Schedule Calculator

$ 5,225,000.00	Loan Amount
4.375%	Interest Rate (entered as a percentage i.e. 3.625%)
30	Term
	# of Years of Principal Deferral (Select from drop-down)
360	Amortization Period
12	Payments per Year
3.65	Amortization Factor
$ 26,125.00	Payment
	Date of Loan Closing

**Disclaimer - Please note that the breakdown of principal and interest payments shown are an estimate only and don't account for leap years. Actual amounts are dependent upon the actual date of application of payment. Interest accrues daily from one payment to the next.

Payment	Interest	Principal	Balance	Cumulative Interest
			$ 5,225,000.00	
9/25/2009	$ 23,798.78	$ 2,326.22	$ 5,222,673.78	$ 23,798.78
10/18/2009	$ 14,398.12	$ 11,726.88	$ 5,210,946.90	$ 38,196.90
11/18/2009	$ 19,362.59	$ 6,762.41	$ 5,204,184.50	$ 57,559.50
12/18/2009	$ 18,713.68	$ 7,411.32	$ 5,196,773.18	$ 76,273.18
1/18/2010	$ 19,309.91	$ 6,815.09	$ 5,189,958.09	$ 95,583.09
2/18/2010	$ 19,284.59	$ 6,840.41	$ 5,183,117.68	$ 114,867.68
3/18/2010	$ 17,395.43	$ 8,729.57	$ 5,174,388.11	$ 132,263.11
4/18/2010	$ 19,226.73	$ 6,898.27	$ 5,167,489.84	$ 151,489.84
5/18/2010	$ 18,581.73	$ 7,543.27	$ 5,159,946.56	$ 170,071.56
6/18/2010	$ 19,173.12	$ 6,951.88	$ 5,152,994.68	$ 189,244.68
7/18/2010	$ 18,529.60	$ 7,595.40	$ 5,145,399.29	$ 207,774.29
8/18/2010	$ 19,119.02	$ 7,005.98	$ 5,138,393.31	$ 226,893.31
9/18/2010	$ 19,092.98	$ 7,032.02	$ 5,131,361.29	$ 245,986.29
10/18/2010	$ 18,451.81	$ 7,673.19	$ 5,123,688.10	$ 264,438.10
11/18/2010	$ 19,038.39	$ 7,086.61	$ 5,116,601.49	$ 283,476.49
12/18/2010	$ 18,398.74	$ 7,726.26	$ 5,108,875.23	$ 301,875.23
1/18/2011	$ 18,983.31	$ 7,141.69	$ 5,101,733.54	$ 320,858.54
2/18/2011	$ 18,956.77	$ 7,168.23	$ 5,094,565.31	$ 339,815.31
3/18/2011	$ 17,098.22	$ 9,026.78	$ 5,085,538.53	$ 356,913.53
4/18/2011	$ 18,896.59	$ 7,228.41	$ 5,078,310.12	$ 375,810.12
5/18/2011	$ 18,261.04	$ 7,863.96	$ 5,070,446.16	$ 394,071.16
6/18/2011	$ 18,840.56	$ 7,284.44	$ 5,063,161.72	$ 412,911.72
7/18/2011	$ 18,206.58	$ 7,918.42	$ 5,055,243.30	$ 431,118.30
8/18/2011	$ 18,784.02	$ 7,340.98	$ 5,047,902.32	$ 449,902.32
9/18/2011	$ 18,756.74	$ 7,368.26	$ 5,040,534.06	$ 468,659.06
10/18/2011	$ 18,125.20	$ 7,999.80	$ 5,032,534.26	$ 486,784.26
11/18/2011	$ 18,699.69	$ 7,425.31	$ 5,025,108.95	$ 505,483.95
12/18/2011	$ 18,069.74	$ 8,055.26	$ 5,017,053.69	$ 523,553.69
1/18/2012	$ 18,642.12	$ 7,482.88	$ 5,009,570.81	$ 542,195.81
2/18/2012	$ 18,614.31	$ 7,510.69	$ 5,002,060.12	$ 560,810.12
3/18/2012	$ 16,787.76	$ 9,337.24	$ 4,992,722.88	$ 577,597.88
4/18/2012	$ 18,551.71	$ 7,573.29	$ 4,985,149.59	$ 596,149.59
5/18/2012	$ 17,926.04	$ 8,198.96	$ 4,976,950.63	$ 614,075.63
6/18/2012	$ 18,493.16	$ 7,631.84	$ 4,969,318.79	$ 632,568.79
7/18/2012	$ 17,869.12	$ 8,255.88	$ 4,961,062.91	$ 650,437.91
8/18/2012	$ 18,434.08	$ 7,690.92	$ 4,953,371.99	$ 668,871.99
9/18/2012	$ 18,405.48	$ 7,719.52	$ 4,945,652.47	$ 687,277.47
10/18/2012	$ 17,784.03	$ 8,340.97	$ 4,937,311.50	$ 705,061.50
11/18/2012	$ 18,345.86	$ 7,779.14	$ 4,929,532.36	$ 723,407.36
12/18/2012	$ 17,726.05	$ 8,398.95	$ 4,921,133.41	$ 741,133.41
1/18/2013	$ 18,285.70	$ 7,839.30	$ 4,913,294.11	$ 759,419.11
2/18/2013	$ 18,256.58	$ 7,868.42	$ 4,905,425.69	$ 777,675.69
3/18/2013	$ 16,463.44	$ 9,661.56	$ 4,895,764.13	$ 794,139.13
4/18/2013	$ 18,191.43	$ 7,933.57	$ 4,887,830.56	$ 812,330.56
5/18/2013	$ 17,576.11	$ 8,548.89	$ 4,879,281.67	$ 829,906.67
6/18/2013	$ 18,130.23	$ 7,994.77	$ 4,871,286.90	$ 848,036.90

Monthly Amortization Factor & Amortization Schedule Calculator

$ 5,225,000.00	Loan Amount
4.375%	Interest Rate (entered as a percentage i.e. 3.625%)
30	Term
	# of Years of Principal Deferral (Select from drop-down)
360	Amortization Period
12	Payments per Year
3.65	Amortization Factor
$ 26,125.00	Payment
	Date of Loan Closing

**Disclaimer - Please note that the breakdown of principal and interest payments shown are an estimate only and don't account for leap years. Actual amounts are dependent upon the actual date of application of payment. Interest accrues daily from one payment to the next.

Payment	Interest	Principal	Balance	Cumulative Interest
			$ 5,225,000.00	
7/18/2013	$ 17,516.62	$ 8,608.38	$ 4,862,678.52	$ 865,553.52
8/18/2013	$ 18,068.49	$ 8,056.51	$ 4,854,622.01	$ 883,622.01
9/18/2013	$ 18,038.56	$ 8,086.44	$ 4,846,535.57	$ 901,660.57
10/18/2013	$ 17,427.61	$ 8,697.39	$ 4,837,838.18	$ 919,088.18
11/18/2013	$ 17,976.24	$ 8,148.76	$ 4,829,689.42	$ 937,064.42
12/18/2013	$ 17,367.04	$ 8,757.96	$ 4,820,931.46	$ 954,431.46
1/18/2014	$ 17,913.37	$ 8,211.63	$ 4,812,719.83	$ 972,344.83
2/18/2014	$ 17,882.86	$ 8,242.14	$ 4,804,477.69	$ 990,227.69
3/18/2014	$ 16,124.64	$ 10,000.36	$ 4,794,477.33	$ 1,006,352.33
4/18/2014	$ 17,815.08	$ 8,309.92	$ 4,786,167.41	$ 1,024,167.41
5/18/2014	$ 17,210.54	$ 8,914.46	$ 4,777,252.95	$ 1,041,377.95
6/18/2014	$ 17,751.12	$ 8,373.88	$ 4,768,879.07	$ 1,059,129.07
7/18/2014	$ 17,148.36	$ 8,976.64	$ 4,759,902.43	$ 1,076,277.43
8/18/2014	$ 17,686.62	$ 8,438.38	$ 4,751,464.05	$ 1,093,964.05
9/18/2014	$ 17,655.25	$ 8,469.75	$ 4,742,994.30	$ 1,111,619.30
10/18/2014	$ 17,055.28	$ 9,069.72	$ 4,733,924.58	$ 1,128,674.58
11/18/2014	$ 17,590.13	$ 8,534.87	$ 4,725,389.71	$ 1,146,264.71
12/18/2014	$ 16,991.99	$ 9,133.01	$ 4,716,256.70	$ 1,163,256.70
1/18/2015	$ 17,524.42	$ 8,600.58	$ 4,707,656.12	$ 1,180,781.12
2/18/2015	$ 17,492.48	$ 8,632.52	$ 4,699,023.60	$ 1,198,273.60
3/18/2015	$ 15,770.71	$ 10,354.29	$ 4,688,669.31	$ 1,214,044.31
4/18/2015	$ 17,421.92	$ 8,703.08	$ 4,679,966.23	$ 1,231,466.23
5/18/2015	$ 18,628.65	$ 7,496.35	$ 4,672,469.88	$ 1,250,094.88
6/18/2015	$ 17,355.08	$ 8,769.92	$ 4,663,699.96	$ 1,267,449.96
7/18/2015	$ 16,763.69	$ 9,361.31	$ 4,654,338.65	$ 1,284,213.65
8/18/2015	$ 17,287.67	$ 8,837.33	$ 4,645,501.32	$ 1,301,501.32
9/18/2015	$ 17,254.84	$ 8,870.16	$ 4,636,631.16	$ 1,318,756.16
10/18/2015	$ 16,666.34	$ 9,458.66	$ 4,627,172.50	$ 1,335,422.50
11/18/2015	$ 17,186.78	$ 8,938.22	$ 4,618,234.28	$ 1,352,609.28
12/18/2015	$ 16,600.19	$ 9,524.81	$ 4,608,709.47	$ 1,369,209.47
1/18/2016	$ 17,118.13	$ 9,006.87	$ 4,599,702.60	$ 1,386,327.60
2/18/2016	$ 17,084.65	$ 9,040.35	$ 4,590,662.25	$ 1,403,412.25
3/18/2016	$ 15,401.01	$ 10,723.99	$ 4,579,938.26	$ 1,418,813.26
4/18/2016	$ 17,011.22	$ 9,113.78	$ 4,570,824.48	$ 1,435,824.48
5/18/2016	$ 16,429.71	$ 9,695.29	$ 4,561,129.19	$ 1,452,254.19
6/18/2016	$ 16,941.37	$ 9,183.63	$ 4,551,945.56	$ 1,469,195.56
7/18/2016	$ 16,361.82	$ 9,763.18	$ 4,542,182.38	$ 1,485,557.38
8/18/2016	$ 16,870.93	$ 9,254.07	$ 4,532,928.31	$ 1,502,428.31
9/18/2016	$ 16,836.55	$ 9,288.45	$ 4,523,639.86	$ 1,519,264.86
10/18/2016	$ 16,260.03	$ 9,864.97	$ 4,513,774.89	$ 1,535,524.89
11/18/2016	$ 16,765.41	$ 9,359.59	$ 4,504,415.30	$ 1,552,290.30
12/18/2016	$ 16,190.92	$ 9,934.08	$ 4,494,481.22	$ 1,568,481.22
1/18/2017	$ 16,696.68	$ 9,428.32	$ 4,485,052.90	$ 1,585,177.90
2/18/2017	$ 16,658.64	$ 9,466.36	$ 4,475,586.54	$ 1,601,836.54
3/18/2017	$ 15,014.77	$ 11,110.23	$ 4,464,476.31	$ 1,616,851.31
4/18/2017	$ 16,582.19	$ 9,542.81	$ 4,454,933.50	$ 1,633,433.50
5/18/2017	$ 16,012.96	$ 10,112.04	$ 4,444,821.46	$ 1,649,446.46
6/18/2017	$ 16,509.20	$ 9,615.80	$ 4,435,205.66	$ 1,665,955.66

Monthly Amortization Factor & Amortization Schedule Calculator

$ 5,225,000.00	Loan Amount
4.375%	Interest Rate (entered as a percentage i.e. 3.625%)
30	Term
	# of Years of Principal Deferral (Select from drop-down)
360	Amortization Period
12	Payments per Year
3.65	Amortization Factor
$ 26,125.00	Payment
	Date of Loan Closing

**Disclaimer - Please note that the breakdown of principal and interest payments shown are an estimate only and don't account for leap years. Actual amounts are dependent upon the actual date of application of payment. Interest accrues daily from one payment to the next.

Payment	Interest	Principal	Balance	Cumulative Interest
			$ 5,225,000.00	
7/18/2017	$ 15,942.02	$ 10,182.98	$ 4,425,022.68	$ 1,681,897.68
8/18/2017	$ 16,435.58	$ 9,689.42	$ 4,415,333.26	$ 1,698,333.26
9/18/2017	$ 16,399.57	$ 9,725.43	$ 4,405,607.83	$ 1,714,732.83
10/18/2017	$ 15,835.60	$ 10,289.40	$ 4,395,318.43	$ 1,730,568.43
11/18/2017	$ 16,325.25	$ 9,799.75	$ 4,385,518.68	$ 1,746,893.68
12/18/2017	$ 15,763.36	$ 10,361.64	$ 4,375,157.04	$ 1,762,657.04
1/18/2018	$ 16,250.29	$ 9,874.71	$ 4,365,282.33	$ 1,778,907.33
2/18/2018	$ 16,213.59	$ 9,911.41	$ 4,355,370.92	$ 1,795,120.92
3/18/2018	$ 14,611.32	$ 11,513.68	$ 4,343,857.24	$ 1,809,732.24
4/18/2018	$ 16,133.99	$ 9,991.01	$ 4,333,866.23	$ 1,825,866.23
5/18/2018	$ 15,577.62	$ 10,547.38	$ 4,323,318.85	$ 1,841,443.85
6/18/2018	$ 16,057.71	$ 10,067.29	$ 4,313,251.56	$ 1,857,501.56
7/18/2018	$ 15,503.50	$ 10,621.50	$ 4,302,630.06	$ 1,873,005.06
8/18/2018	$ 15,980.79	$ 10,144.21	$ 4,292,485.85	$ 1,888,985.85
9/18/2018	$ 15,943.10	$ 10,181.90	$ 4,282,303.95	$ 1,904,928.95
10/18/2018	$ 15,392.22	$ 10,732.78	$ 4,271,571.17	$ 1,920,321.17
11/18/2018	$ 15,865.41	$ 10,259.59	$ 4,261,311.58	$ 1,936,186.58
12/18/2018	$ 15,316.73	$ 10,808.27	$ 12/31/18 4,250,503.31	$ 1,951,503.31
1/18/2019	$ 15,787.10	$ 10,337.90	$ 4,240,165.41	$ 1,967,290.41
2/18/2019	$ 15,748.70	$ 10,376.30	$ 4,229,789.11	$ 1,983,039.11
3/18/2019	$ 14,189.84	$ 11,935.16	$ 4,217,853.95	$ 1,997,228.95
4/18/2019	$ 15,672.51	$ 10,452.49	$ 4,207,401.46	$ 2,012,901.46
5/18/2019	$ 15,129.35	$ 10,995.65	$ 4,196,405.81	$ 2,028,030.81
6/18/2019	$ 15,592.81	$ 10,532.19	$ 7/1/19 4,185,873.62	$ 2,043,623.62
7/18/2019	$ 15,051.94	$ 11,073.06	$ 4,174,800.56	$ 2,058,675.56
8/18/2019	$ FY 20 15,512.53	$ FY20 10,612.47	$ 4,164,188.09	$ 2,074,188.09
9/18/2019	$ 15,473.10	$ 10,651.90	$ 4,153,536.19	$ 2,089,661.19
10/18/2019	$ 14,935.66	$ 11,189.34	$ 4,142,346.85	$ 2,104,596.85
11/18/2019	$ 15,391.94	$ 10,733.06	$ 4,131,613.79	$ 2,119,988.79
12/18/2019	$ 14,856.83	$ 11,268.17	$ 4,120,345.62	$ 2,134,845.62
1/18/2020	$ 180,933.44 15,310.19	$ 132,506.56 10,814.81	$ 4,109,530.81	$ 2,150,155.81
2/18/2020	$ 15,270.00	$ 10,855.00	$ 4,098,675.81	$ 2,165,425.81
3/18/2020	$ 14,247.11	$ 11,877.89	$ 4,086,797.92	$ 2,179,672.92
4/18/2020	$ 15,185.53	$ 10,939.47	$ 4,075,858.46	$ 2,194,858.46
5/18/2020	$ 14,656.34	$ 11,468.66	$ 4,064,389.80	$ 2,209,514.80
6/18/2020	$ 15,102.27	$ 11,022.73	$ 4,053,367.07	$ 2,224,617.07
7/18/2020	$ 14,575.46	$ 11,549.54	$ 4,041,817.53	$ 2,239,192.53
8/18/2020	$ 15,018.40	$ 11,106.60	$ 4,030,710.93	$ 2,254,210.93
9/18/2020	$ 14,977.13	$ 11,147.87	$ 4,019,563.06	$ 2,269,188.06
10/18/2020	$ 14,453.91	$ 11,671.09	$ 4,007,891.96	$ 2,283,641.96
11/18/2020	$ 14,892.34	$ 11,232.66	$ 3,996,659.30	$ 2,298,534.30
12/18/2020	$ 14,371.55	$ 11,753.45	$ 3,984,905.85	$ 2,312,905.85
1/18/2021	$ 14,806.93	$ 11,318.07	$ 3,973,587.78	$ 2,327,712.78
2/18/2021	$ 14,764.87	$ 11,360.13	$ 3,962,227.65	$ 2,342,477.65
3/18/2021	$ 13,297.89	$ 12,827.11	$ 3,949,400.54	$ 2,355,775.54
4/18/2021	$ 14,675.00	$ 11,450.00	$ 3,937,950.54	$ 2,370,450.54
5/18/2021	$ 14,160.44	$ 11,964.56	$ 3,925,985.98	$ 2,384,610.98
6/18/2021	$ 14,588.00	$ 11,537.00	$ 3,914,448.97	$ 2,399,198.97

Doesn't match 1098

Monthly Amortization Factor & Amortization Schedule Calculator

$ 5,225,000.00	Loan Amount
4.375%	Interest Rate (entered as a percentage i.e. 3.625%)
30	Term
	# of Years of Principal Deferral (Select from drop-down)
360	Amortization Period
12	Payments per Year
3.65	Amortization Factor
$ 26,125.00	Payment
	Date of Loan Closing

**Disclaimer - Please note that the breakdown of principal and interest payments shown are an estimate only and don't account for leap years. Actual amounts are dependent upon the actual date of application of payment. Interest accrues daily from one payment to the next.

Payment	Interest	Principal	Balance	Cumulative Interest
			$ 5,225,000.00	
7/18/2021	$ 14,075.93	$ 12,049.07	$ 3,902,399.90	$ 2,413,274.90
8/18/2021	$ 14,500.36	$ 11,624.64	$ 3,890,775.26	$ 2,427,775.26
9/18/2021	$ 14,457.16	$ 11,667.84	$ 3,879,107.42	$ 2,442,232.42
10/18/2021	$ 13,948.85	$ 12,176.15	$ 3,866,931.26	$ 2,456,181.26
11/18/2021	$ 14,368.56	$ 11,756.44	$ 3,855,174.83	$ 2,470,549.83
12/18/2021	$ 13,862.79	$ 12,262.21	$ 3,842,912.61	$ 2,484,412.61
1/18/2022	$ 14,279.32	$ 11,845.68	$ 3,831,066.93	$ 2,498,691.93
2/18/2022	$ 14,235.30	$ 11,889.70	$ 3,819,177.23	$ 2,512,927.23
3/18/2022	$ 12,817.79	$ 13,307.21	$ 3,805,870.01	$ 2,525,745.01
4/18/2022	$ 14,141.67	$ 11,983.33	$ 3,793,886.69	$ 2,539,886.69
5/18/2022	$ 13,642.40	$ 12,482.60	$ 3,781,404.09	$ 2,553,529.09
6/18/2022	$ 14,050.77	$ 12,074.23	$ 3,769,329.85	$ 2,567,579.85
7/18/2022	$ 13,554.10	$ 12,570.90	$ 3,756,758.95	$ 2,581,133.95
8/18/2022	$ 13,959.19	$ 12,165.81	$ 3,744,593.14	$ 2,595,093.14
9/18/2022	$ 13,913.98	$ 12,211.02	$ 3,732,382.13	$ 2,609,007.13
10/18/2022	$ 13,421.24	$ 12,703.76	$ 3,719,678.36	$ 2,622,428.36
11/18/2022	$ 13,821.41	$ 12,303.59	$ 3,707,374.77	$ 2,636,249.77
12/18/2022	$ 13,331.31	$ 12,793.69	$ 3,694,581.08	$ 2,649,581.08
1/18/2023	$ 13,728.15	$ 12,396.85	$ 3,682,184.24	$ 2,663,309.24
2/18/2023	$ 13,682.09	$ 12,442.91	$ 3,669,741.33	$ 2,676,991.33
3/18/2023	$ 12,316.26	$ 13,808.74	$ 3,655,932.58	$ 2,689,307.58
4/18/2023	$ 13,584.54	$ 12,540.46	$ 3,643,392.13	$ 2,702,892.13
5/18/2023	$ 13,101.24	$ 13,023.76	$ 3,630,368.36	$ 2,715,993.36
6/18/2023	$ 13,489.55	$ 12,635.45	$ 3,617,732.92	$ 2,729,482.92
7/18/2023	$ 13,008.97	$ 13,116.03	$ 3,604,616.89	$ 2,742,491.89
8/18/2023	$ 13,393.87	$ 12,731.13	$ 3,591,885.76	$ 2,755,885.76
9/18/2023	$ 13,346.56	$ 12,778.44	$ 3,579,107.32	$ 2,769,232.32
10/18/2023	$ 12,870.08	$ 13,254.92	$ 3,565,852.40	$ 2,782,102.40
11/18/2023	$ 13,249.83	$ 12,875.17	$ 3,552,977.22	$ 2,795,352.22
12/18/2023	$ 12,776.12	$ 13,348.88	$ 3,539,628.34	$ 2,808,128.34
1/18/2024	$ 13,152.39	$ 12,972.61	$ 3,526,655.73	$ 2,821,280.73
2/18/2024	$ 13,104.18	$ 13,020.82	$ 3,513,634.91	$ 2,834,384.91
3/18/2024	$ 12,213.49	$ 13,911.51	$ 3,499,723.40	$ 2,846,598.40
4/18/2024	$ 13,004.11	$ 13,120.89	$ 3,486,602.51	$ 2,859,602.51
5/18/2024	$ 12,537.44	$ 13,587.56	$ 3,473,014.95	$ 2,872,139.95
6/18/2024	$ 12,904.87	$ 13,220.13	$ 3,459,794.82	$ 2,885,044.82
7/18/2024	$ 12,441.04	$ 13,683.96	$ 3,446,110.86	$ 2,897,485.86
8/18/2024	$ 12,804.90	$ 13,320.10	$ 3,432,790.76	$ 2,910,290.76
9/18/2024	$ 12,755.40	$ 13,369.60	$ 3,419,421.16	$ 2,923,046.16
10/18/2024	$ 12,295.86	$ 13,829.14	$ 3,405,592.03	$ 2,935,342.03
11/18/2024	$ 12,654.34	$ 13,470.66	$ 3,392,121.37	$ 2,947,996.37
12/18/2024	$ 12,197.70	$ 13,927.30	$ 3,378,194.06	$ 2,960,194.06
1/18/2025	$ 12,552.54	$ 13,572.46	$ 3,364,621.60	$ 2,972,746.60
2/18/2025	$ 12,502.10	$ 13,622.90	$ 3,350,998.70	$ 2,985,248.70
3/18/2025	$ 11,246.50	$ 14,878.50	$ 3,336,120.21	$ 2,996,495.21
4/18/2025	$ 12,396.20	$ 13,728.80	$ 3,322,391.41	$ 3,008,891.41
5/18/2025	$ 11,946.96	$ 14,178.04	$ 3,308,213.36	$ 3,020,838.36
6/18/2025	$ 12,292.51	$ 13,832.49	$ 3,294,380.87	$ 3,033,130.87

Monthly Amortization Factor & Amortization Schedule Calculator

$ 5,225,000.00	Loan Amount
4.375%	Interest Rate (entered as a percentage i.e. 3.625%)
30	Term
	# of Years of Principal Deferral (Select from drop-down)
360	Amortization Period
12	Payments per Year
3.65	Amortization Factor
$ 26,125.00	Payment
	Date of Loan Closing

**Disclaimer - Please note that the breakdown of principal and interest payments shown are an estimate only and don't account for leap years. Actual amounts are dependent upon the actual date of application of payment. Interest accrues daily from one payment to the next.

Payment	Interest	Principal	Balance	Cumulative Interest
			$ 5,225,000.00	
7/18/2025	$ 11,846.23	$ 14,278.77	$ 3,280,102.10	$ 3,044,977.10
8/18/2025	$ 12,188.05	$ 13,936.95	$ 3,266,165.15	$ 3,057,165.15
9/18/2025	$ 12,136.26	$ 13,988.74	$ 3,252,176.42	$ 3,069,301.42
10/18/2025	$ 11,694.47	$ 14,430.53	$ 3,237,745.89	$ 3,080,995.89
11/18/2025	$ 12,030.67	$ 14,094.33	$ 3,223,651.55	$ 3,093,026.55
12/18/2025	$ 11,591.90	$ 14,533.10	$ 3,209,118.45	$ 3,104,618.45
1/18/2026	$ 11,924.29	$ 14,200.71	$ 3,194,917.74	$ 3,116,542.74
2/18/2026	$ 11,871.53	$ 14,253.47	$ 3,180,664.27	$ 3,128,414.27
3/18/2026	$ 10,674.83	$ 15,450.17	$ 3,165,214.10	$ 3,139,089.10
4/18/2026	$ 11,761.16	$ 14,363.84	$ 3,150,850.25	$ 3,150,850.25
5/18/2026	$ 11,330.11	$ 14,794.89	$ 3,136,055.37	$ 3,162,180.37
6/18/2026	$ 11,652.81	$ 14,472.19	$ 3,121,583.18	$ 3,173,833.18
7/18/2026	$ 11,224.87	$ 14,900.13	$ 3,106,683.05	$ 3,185,058.05
8/18/2026	$ 11,543.67	$ 14,581.33	$ 3,092,101.71	$ 3,196,601.71
9/18/2026	$ 11,489.49	$ 14,635.51	$ 3,077,466.20	$ 3,208,091.20
10/18/2026	$ 11,066.23	$ 15,058.77	$ 3,062,407.43	$ 3,219,157.43
11/18/2026	$ 11,379.15	$ 14,745.85	$ 3,047,661.58	$ 3,230,536.58
12/18/2026	$ 10,959.06	$ 15,165.94	$ 3,032,495.64	$ 3,241,495.64
1/18/2027	$ 11,268.01	$ 14,856.99	$ 3,017,638.65	$ 3,252,763.65
2/18/2027	$ 11,212.80	$ 14,912.20	$ 3,002,726.45	$ 3,263,976.45
3/18/2027	$ 10,077.64	$ 16,047.36	$ 2,986,679.09	$ 3,274,054.09
4/18/2027	$ 11,097.76	$ 15,027.24	$ 2,971,651.86	$ 3,285,151.86
5/18/2027	$ 10,685.73	$ 15,439.27	$ 2,956,212.59	$ 3,295,837.59
6/18/2027	$ 10,984.56	$ 15,140.44	$ 2,941,072.15	$ 3,306,822.15
7/18/2027	$ 10,575.77	$ 15,549.23	$ 2,925,522.92	$ 3,317,397.92
8/18/2027	$ 10,870.52	$ 15,254.48	$ 2,910,268.44	$ 3,328,268.44
9/18/2027	$ 10,813.84	$ 15,311.16	$ 2,894,957.28	$ 3,339,082.28
10/18/2027	$ 10,409.95	$ 15,715.05	$ 2,879,242.23	$ 3,349,492.23
11/18/2027	$ 10,698.55	$ 15,426.45	$ 2,863,815.78	$ 3,360,190.78
12/18/2027	$ 10,297.97	$ 15,827.03	$ 2,847,988.75	$ 3,370,488.75
1/18/2028	$ 10,582.42	$ 15,542.58	$ 2,832,446.18	$ 3,381,071.18
2/18/2028	$ 10,524.67	$ 15,600.33	$ 2,816,845.85	$ 3,391,595.85
3/18/2028	$ 9,791.43	$ 16,333.57	$ 2,800,512.28	$ 3,401,387.28
4/18/2028	$ 10,406.01	$ 15,718.99	$ 2,784,793.29	$ 3,411,793.29
5/18/2028	$ 10,013.81	$ 16,111.19	$ 2,768,682.11	$ 3,421,807.11
6/18/2028	$ 10,287.74	$ 15,837.26	$ 2,752,844.85	$ 3,432,094.85
7/18/2028	$ 9,898.93	$ 16,226.07	$ 2,736,618.77	$ 3,441,993.77
8/18/2028	$ 10,168.60	$ 15,956.40	$ 2,720,662.37	$ 3,452,162.37
9/18/2028	$ 10,109.31	$ 16,015.69	$ 2,704,646.69	$ 3,462,271.69
10/18/2028	$ 9,725.61	$ 16,399.39	$ 2,688,247.30	$ 3,471,997.30
11/18/2028	$ 9,988.86	$ 16,136.14	$ 2,672,111.16	$ 3,481,986.16
12/18/2028	$ 9,608.62	$ 16,516.38	$ 2,655,594.78	$ 3,491,594.78
1/18/2029	$ 9,867.54	$ 16,257.46	$ 2,639,337.32	$ 3,501,462.32
2/18/2029	$ 9,807.13	$ 16,317.87	$ 2,623,019.44	$ 3,511,269.44
3/18/2029	$ 8,803.28	$ 17,321.72	$ 2,605,697.73	$ 3,520,072.73
4/18/2029	$ 9,682.13	$ 16,442.87	$ 2,589,254.86	$ 3,529,754.86
5/18/2029	$ 9,310.68	$ 16,814.32	$ 2,572,440.54	$ 3,539,065.54
6/18/2029	$ 9,558.55	$ 16,566.45	$ 2,555,874.09	$ 3,548,624.09

Monthly Amortization Factor & Amortization Schedule Calculator

$ 5,225,000.00	Loan Amount
4.375%	Interest Rate (entered as a percentage i.e. 3.625%)
30	Term
	# of Years of Principal Deferral (Select from drop-down)
360	Amortization Period
12	Payments per Year
3.65	Amortization Factor
$ 26,125.00	Payment
	Date of Loan Closing

**Disclaimer - Please note that the breakdown of principal and interest payments shown are an estimate only and don't account for leap years. Actual amounts are dependent upon the actual date of application of payment. Interest accrues daily from one payment to the next.

Payment	Interest	Principal	Balance	Cumulative Interest
			$ 5,225,000.00	
7/18/2029	$ 9,190.64	$ 16,934.36	$ 2,538,939.73	$ 3,557,814.73
8/18/2029	$ 9,434.07	$ 16,690.93	$ 2,522,248.81	$ 3,567,248.81
9/18/2029	$ 9,372.05	$ 16,752.95	$ 2,505,495.86	$ 3,576,620.86
10/18/2029	$ 9,009.49	$ 17,115.51	$ 2,488,380.35	$ 3,585,630.35
11/18/2029	$ 9,246.21	$ 16,878.79	$ 2,471,501.56	$ 3,594,876.56
12/18/2029	$ 8,887.25	$ 17,237.75	$ 2,454,263.81	$ 3,603,763.81
1/18/2030	$ 9,119.44	$ 17,005.56	$ 2,437,258.25	$ 3,612,883.25
2/18/2030	$ 9,056.25	$ 17,068.75	$ 2,420,189.50	$ 3,621,939.50
3/18/2030	$ 8,122.55	$ 18,002.45	$ 2,402,187.05	$ 3,630,062.05
4/18/2030	$ 8,925.93	$ 17,199.07	$ 2,384,987.99	$ 3,638,987.99
5/18/2030	$ 8,576.16	$ 17,548.84	$ 2,367,439.14	$ 3,647,564.14
6/18/2030	$ 8,796.82	$ 17,328.18	$ 2,350,110.96	$ 3,656,360.96
7/18/2030	$ 8,450.74	$ 17,674.26	$ 2,332,436.70	$ 3,664,811.70
8/18/2030	$ 8,666.76	$ 17,458.24	$ 2,314,978.46	$ 3,673,478.46
9/18/2030	$ 8,601.89	$ 17,523.11	$ 2,297,455.35	$ 3,682,080.35
10/18/2030	$ 8,261.40	$ 17,863.60	$ 2,279,591.75	$ 3,690,341.75
11/18/2030	$ 8,470.40	$ 17,654.60	$ 2,261,937.15	$ 3,698,812.15
12/18/2030	$ 8,133.68	$ 17,991.32	$ 2,243,945.83	$ 3,706,945.83
1/18/2031	$ 8,337.95	$ 17,787.05	$ 2,226,158.78	$ 3,715,283.78
2/18/2031	$ 8,271.86	$ 17,853.14	$ 2,208,305.63	$ 3,723,555.63
3/18/2031	$ 7,411.44	$ 18,713.56	$ 2,189,592.07	$ 3,730,967.07
4/18/2031	$ 8,135.98	$ 17,989.02	$ 2,171,603.05	$ 3,739,103.05
5/18/2031	$ 7,808.85	$ 18,316.15	$ 2,153,286.90	$ 3,746,911.90
6/18/2031	$ 8,001.08	$ 18,123.92	$ 2,135,162.98	$ 3,754,912.98
7/18/2031	$ 7,677.81	$ 18,447.19	$ 2,116,715.80	$ 3,762,590.80
8/18/2031	$ 7,865.19	$ 18,259.81	$ 2,098,455.99	$ 3,770,455.99
9/18/2031	$ 7,797.35	$ 18,327.65	$ 2,080,128.34	$ 3,778,253.34
10/18/2031	$ 7,479.91	$ 18,645.09	$ 2,061,483.25	$ 3,785,733.25
11/18/2031	$ 7,659.96	$ 18,465.04	$ 2,043,018.21	$ 3,793,393.21
12/18/2031	$ 7,346.47	$ 18,778.53	$ 2,024,239.68	$ 3,800,739.68
1/18/2032	$ 7,521.58	$ 18,603.42	$ 2,005,636.26	$ 3,808,261.26
2/18/2032	$ 7,452.45	$ 18,672.55	$ 1,986,963.71	$ 3,815,713.71
3/18/2032	$ 6,906.74	$ 19,218.26	$ 1,967,745.45	$ 3,822,620.45
4/18/2032	$ 7,311.66	$ 18,813.34	$ 1,948,932.10	$ 3,829,932.10
5/18/2032	$ 7,008.15	$ 19,116.85	$ 1,929,815.25	$ 3,836,940.25
6/18/2032	$ 7,170.72	$ 18,954.28	$ 1,910,860.97	$ 3,844,110.97
7/18/2032	$ 6,871.25	$ 19,253.75	$ 1,891,607.22	$ 3,850,982.22
8/18/2032	$ 7,028.75	$ 19,096.25	$ 1,872,510.96	$ 3,858,010.96
9/18/2032	$ 6,957.79	$ 19,167.21	$ 1,853,343.75	$ 3,864,968.75
10/18/2032	$ 6,664.42	$ 19,460.58	$ 1,833,883.17	$ 3,871,633.17
11/18/2032	$ 6,814.26	$ 19,310.74	$ 1,814,572.43	$ 3,878,447.43
12/18/2032	$ 6,525.00	$ 19,600.00	$ 1,794,972.43	$ 3,884,972.43
1/18/2033	$ 6,669.67	$ 19,455.33	$ 1,775,517.11	$ 3,891,642.11
2/18/2033	$ 6,597.38	$ 19,527.62	$ 1,755,989.49	$ 3,898,239.49
3/18/2033	$ 5,893.39	$ 20,231.61	$ 1,735,757.88	$ 3,904,132.88
4/18/2033	$ 6,449.65	$ 19,675.35	$ 1,716,082.53	$ 3,910,582.53
5/18/2033	$ 6,170.84	$ 19,954.16	$ 1,696,128.37	$ 3,916,753.37
6/18/2033	$ 6,302.39	$ 19,822.61	$ 1,676,305.77	$ 3,923,055.77

Monthly Amortization Factor & Amortization Schedule Calculator

$ 5,225,000.00	Loan Amount
4.375%	Interest Rate (entered as a percentage i.e. 3.625%)
30	Term
	# of Years of Principal Deferral (Select from drop-down)
360	Amortization Period
12	Payments per Year
3.65	Amortization Factor
$ 26,125.00	Payment
	Date of Loan Closing

**Disclaimer - Please note that the breakdown of principal and interest payments shown are an estimate only and don't account for leap years. Actual amounts are dependent upon the actual date of application of payment. Interest accrues daily from one payment to the next.

Payment	Interest	Principal	Balance	Cumulative Interest
			$ 5,225,000.00	
7/18/2033	$ 6,027.81	$ 20,097.19	$ 1,656,208.58	$ 3,929,083.58
8/18/2033	$ 6,154.06	$ 19,970.94	$ 1,636,237.64	$ 3,935,237.64
9/18/2033	$ 6,079.86	$ 20,045.14	$ 1,616,192.50	$ 3,941,317.50
10/18/2033	$ 5,811.65	$ 20,313.35	$ 1,595,879.15	$ 3,947,129.15
11/18/2033	$ 5,929.89	$ 20,195.11	$ 1,575,684.04	$ 3,953,059.04
12/18/2033	$ 5,665.99	$ 20,459.01	$ 1,555,225.03	$ 3,958,725.03
1/18/2034	$ 5,778.83	$ 20,346.17	$ 1,534,878.86	$ 3,964,503.86
2/18/2034	$ 5,703.23	$ 20,421.77	$ 1,514,457.09	$ 3,970,207.09
3/18/2034	$ 5,082.77	$ 21,042.23	$ 1,493,414.86	$ 3,975,289.86
4/18/2034	$ 5,549.16	$ 20,575.84	$ 1,472,839.02	$ 3,980,839.02
5/18/2034	$ 5,296.17	$ 20,828.83	$ 1,452,010.19	$ 3,986,135.19
6/18/2034	$ 5,395.31	$ 20,729.69	$ 1,431,280.50	$ 3,991,530.50
7/18/2034	$ 5,146.73	$ 20,978.27	$ 1,410,302.23	$ 3,996,677.23
8/18/2034	$ 5,240.34	$ 20,884.66	$ 1,389,417.57	$ 4,001,917.57
9/18/2034	$ 5,162.73	$ 20,962.27	$ 1,368,455.30	$ 4,007,080.30
10/18/2034	$ 4,920.82	$ 21,204.18	$ 1,347,251.11	$ 4,012,001.11
11/18/2034	$ 5,006.05	$ 21,118.95	$ 1,326,132.17	$ 4,017,007.17
12/18/2034	$ 4,768.63	$ 21,356.37	$ 1,304,775.79	$ 4,021,775.79
1/18/2035	$ 4,848.23	$ 21,276.77	$ 1,283,499.02	$ 4,026,624.02
2/18/2035	$ 4,769.17	$ 21,355.83	$ 1,262,143.18	$ 4,031,393.18
3/18/2035	$ 4,235.96	$ 21,889.04	$ 1,240,254.14	$ 4,035,629.14
4/18/2035	$ 4,608.48	$ 21,516.52	$ 1,218,737.62	$ 4,040,237.62
5/18/2035	$ 4,382.45	$ 21,742.55	$ 1,196,995.07	$ 4,044,620.07
6/18/2035	$ 4,447.74	$ 21,677.26	$ 1,175,317.81	$ 4,049,067.81
7/18/2035	$ 4,226.31	$ 21,898.69	$ 1,153,419.12	$ 4,053,294.12
8/18/2035	$ 4,285.82	$ 21,839.18	$ 1,131,579.94	$ 4,057,579.94
9/18/2035	$ 4,204.67	$ 21,920.33	$ 1,109,659.62	$ 4,061,784.62
10/18/2035	$ 3,990.21	$ 22,134.79	$ 1,087,524.83	$ 4,065,774.83
11/18/2035	$ 4,040.97	$ 22,084.03	$ 1,065,440.80	$ 4,069,815.80
12/18/2035	$ 3,831.21	$ 22,293.79	$ 1,043,147.01	$ 4,073,647.01
1/18/2036	$ 3,876.08	$ 22,248.92	$ 1,020,898.09	$ 4,077,523.09
2/18/2036	$ 3,793.41	$ 22,331.59	$ 998,566.49	$ 4,081,316.49
3/18/2036	$ 3,471.04	$ 22,653.96	$ 975,912.54	$ 4,084,787.54
4/18/2036	$ 3,626.25	$ 22,498.75	$ 953,413.79	$ 4,088,413.79
5/18/2036	$ 3,428.37	$ 22,696.63	$ 930,717.16	$ 4,091,842.16
6/18/2036	$ 3,458.32	$ 22,666.68	$ 908,050.48	$ 4,095,300.48
7/18/2036	$ 3,265.25	$ 22,859.75	$ 885,190.73	$ 4,098,565.73
8/18/2036	$ 3,289.15	$ 22,835.85	$ 862,354.88	$ 4,101,854.88
9/18/2036	$ 3,204.30	$ 22,920.70	$ 839,434.18	$ 4,105,059.18
10/18/2036	$ 3,018.51	$ 23,106.49	$ 816,327.69	$ 4,108,077.69
11/18/2036	$ 3,033.27	$ 23,091.73	$ 793,235.96	$ 4,111,110.96
12/18/2036	$ 2,852.39	$ 23,272.61	$ 769,963.35	$ 4,113,963.35
1/18/2037	$ 2,860.99	$ 23,264.01	$ 746,699.34	$ 4,116,824.34
2/18/2037	$ 2,774.55	$ 23,350.45	$ 723,348.89	$ 4,119,598.89
3/18/2037	$ 2,427.68	$ 23,697.32	$ 699,651.57	$ 4,122,026.57
4/18/2037	$ 2,599.73	$ 23,525.27	$ 676,126.31	$ 4,124,626.31
5/18/2037	$ 2,431.28	$ 23,693.72	$ 652,432.58	$ 4,127,057.58
6/18/2037	$ 2,424.28	$ 23,700.72	$ 628,731.86	$ 4,129,481.86

Monthly Amortization Factor & Amortization Schedule Calculator

$ 5,225,000.00	Loan Amount
4.375%	Interest Rate (entered as a percentage i.e. 3.625%)
30	Term
	# of Years of Principal Deferral (Select from drop-down)
360	Amortization Period
12	Payments per Year
3.65	Amortization Factor
$ 26,125.00	Payment
	Date of Loan Closing

**Disclaimer - Please note that the breakdown of principal and interest payments shown are an estimate only and don't account for leap years. Actual amounts are dependent upon the actual date of application of payment. Interest accrues daily from one payment to the next.

Payment	Interest	Principal	Balance	Cumulative Interest
			$ 5,225,000.00	
7/18/2037	$ 2,260.85	$ 23,864.15	$ 604,867.71	$ 4,131,742.71
8/18/2037	$ 2,247.54	$ 23,877.46	$ 580,990.25	$ 4,133,990.25
9/18/2037	$ 2,158.82	$ 23,966.18	$ 557,024.07	$ 4,136,149.07
10/18/2037	$ 2,003.00	$ 24,122.00	$ 532,902.06	$ 4,138,152.06
11/18/2037	$ 1,980.13	$ 24,144.87	$ 508,757.20	$ 4,140,132.20
12/18/2037	$ 1,829.44	$ 24,295.56	$ 484,461.63	$ 4,141,961.63
1/18/2038	$ 1,800.14	$ 24,324.86	$ 460,136.77	$ 4,143,761.77
2/18/2038	$ 1,709.75	$ 24,415.25	$ 435,721.53	$ 4,145,471.53
3/18/2038	$ 1,462.35	$ 24,662.65	$ 411,058.88	$ 4,146,933.88
4/18/2038	$ 1,527.39	$ 24,597.61	$ 386,461.27	$ 4,148,461.27
5/18/2038	$ 1,389.67	$ 24,735.33	$ 361,725.95	$ 4,149,850.95
6/18/2038	$ 1,344.08	$ 24,780.92	$ 336,945.03	$ 4,151,195.03
7/18/2038	$ 1,211.62	$ 24,913.38	$ 312,031.65	$ 4,152,406.65
8/18/2038	$ 1,159.43	$ 24,965.57	$ 287,066.08	$ 4,153,566.08
9/18/2038	$ 1,066.67	$ 25,058.33	$ 262,007.75	$ 4,154,632.75
10/18/2038	$ 942.15	$ 25,182.85	$ 236,824.90	$ 4,155,574.90
11/18/2038	$ 879.98	$ 25,245.02	$ 211,579.88	$ 4,156,454.88
12/18/2038	$ 760.82	$ 25,364.18	$ 186,215.70	$ 4,157,215.70
1/18/2039	$ 691.93	$ 25,433.07	$ 160,782.63	$ 4,157,907.63
2/18/2039	$ 597.43	$ 25,527.57	$ 135,255.06	$ 4,158,505.06
3/18/2039	$ 453.94	$ 25,671.06	$ 109,584.00	$ 4,158,959.00
4/18/2039	$ 407.19	$ 25,717.81	$ 83,866.18	$ 4,159,366.18
5/18/2039	$ 301.57	$ 25,823.43	$ 58,042.76	$ 4,159,667.76
6/18/2039	$ 215.67	$ 25,909.33	$ 32,133.43	$ 4,159,883.43
7/18/2039	$ 115.55	$ 26,009.45	$ 6,123.98	$ 4,159,998.98
8/18/2039	$ 22.76	$ 26,102.24	$ (19,978.27)	$ 4,160,021.73

USDA

1098 FORM

PRINCIPAL BALANCE

DECEMBER 31, 2018

FORM RD-1951-9
(06/18)

UNITED STATES DEPARTMENT OF AGRICULTURE
RURAL DEVELOPMENT
ANNUAL STATEMENT OF LOAN ACCOUNT City Hall

99000195203 L1951980

SAVE THIS INFORMATION
FOR INCOME TAX PURPOSES Med Term Sales Tax Rev Bond Series 2009

PAGE 005
DATE 123118

CASE NUMBER 33-004-******2071 FINAL YEAR OF LOAN 2039
FUND CODE 97 LOAN NUMBER 19 DATE OF LOAN 081809 INTEREST RATE 04.3750 AMOUNT OF LOAN 5,225,000.00

DESCRIPTION	ADVANCES	INTEREST	PRINCIPAL	TOTAL	T	INTEREST RATE	EFFECTIVE DATE
BEGIN LOAN BALNCE		6,814.65	4,373,354.07	4,380,168.72			010118
PAYMENT		16,250.29	9,874.71	26,125.00	R	04.3750	011818
PAYMENT		16,213.59	9,911.41	26,125.00	R	04.3750	021818
PAYMENT		14,611.32	11,513.68	26,125.00	R	04.3750	031818
PAYMENT		16,133.99	9,991.01	26,125.00	R	04.3750	041818
PAYMENT		15,577.62	10,547.38	26,125.00	R	04.3750	051818
PAYMENT		16,057.71	10,067.29	26,125.00	R	04.3750	061818
PAYMENT		15,503.50	10,621.50	26,125.00	R	04.3750	071818
PAYMENT		15,980.79	10,144.21	26,125.00	R	04.3750	081818
PAYMENT		15,943.10	10,181.90	26,125.00	R	04.3750	091818
PAYMENT		15,392.22	10,732.78	26,125.00	R	04.3750	101818
PAYMENT		15,865.43	10,259.57	26,125.00	R	04.3750	111818
PAYMENT		15,316.73	10,808.27	26,125.00	R	04.3750	121818
TOTAL LOAN PMTS		188,846.29	124,653.71	313,500.00			

LOAN ACTIVITY	0.00	188,846.29	124,653.71	313,500.00
LOAN BALANCE	UNPD INTEREST	6,620.41 **	UNPD PRIN 4,248,700.36 **	
NXT AMT DUE	26,125.00	DATE DUE 011819		
PAYMENT STATUS		ON SCHEDULE	INT PAID 188,846.29	
		TAXES PAID		

**Where unpaid balances may not reflect the total amount due to the Agency at payoff.

RECIPIENT'S/LENDER'S name, street address, city or town, state or province, country, ZIP or foreign postal code, and telephone no.

USDA RURAL DEVELOPMENT
PHONE#(833)797-3726
4300 GOODFELLOW BLVD FC-1332
ST. LOUIS, MO 63120

CAUTION: The amount shown may not be fully deductible by you. Limits based on the loan amount and the cost and value of the secured property may apply. Also, you may only deduct interest to the extent it was incurred by you, actually paid by you, and not reimbursed by another person.

OMB NO. 1545-0901
2018
(Rev. June 2018)
Form 1098

CORRECTED (if checked)

Mortgage Interest Statement

1 Mortgage interest received from payer(s)/borrower(s)
$ 0.00

RECIPIENT'S/LENDERS TIN: 431757115
PAYER'S/BORROWER'S TIN: ******2071

2 Outstanding mortgage principal as of 1/1/2018
$

3 Mortgage origination date

4 Refund of overpaid interest
$

5 Mortgage insurance premiums
$

6 Points paid on purchase of principal residence
$

7 If address of property securing mortgage is the same as PAYER'S/BORROWER'S address, the box is checked, or the address or description is entered in box 8. [X]

8 Address or description of property securing mortgage (see instructions)

PAYER'S/BORROWER'S name, Street address (including apt. no.), city or town, state or province, country, and ZIP or foreign postal code

WEST WENDOVER CITY OF 33-706
P O BOX 2825
WEST WENDOVER NV 89883

9 Number of properties securing the mortgage

10 Other
IRS FORM 1098 DOES NOT APPLY TO YOUR LOAN

Account number (see instructions)
33004******207197 19

COPY B
FOR PAYER/BORROWER

The information in boxes 1 through 9 is important tax information and is being furnished to the IRS. If you are required to file a return, a negligence penalty or other sanction may be imposed on you if the IRS determines that an underpayment of tax results because you overstated a deduction for this mortgage interest or for these points reported in boxes 1 and 6; or because you didn't report the refund of interest (box 4); or because you claimed a nondeductible item.

FORM 1098 (keep for your records) www.irs.gov/Form1098 Department of the Treasury - Internal Revenue Service

Pinnacle Public Finance, Inc.
City of West Wendover –General Obligation (Limited Tax) Medium-Term, Bond, Series 2015
May 26, 2015

Preliminary Debt Service Schedule

Totals:		$2,471,980.96	$271,980.96	$2,200,000.00	Rate 2.2600%		$2,471,980.96
Pmt #	Payment Date	Payment Amount	Interest	Principal	Purchase Price	Outstanding Balance	Annual Total
	7/14/2015					$2,200,000.00	
1	1/1/2016	$23,064.56	$23,064.56	$0.00	$2,200,000.00	$2,200,000.00	
2	7/1/2016	$230,860.00	$24,860.00	$206,000.00	$1,994,000.00	$1,994,000.00	$253,924.56
3	1/1/2017	$22,532.20	$22,532.20	$0.00	$1,994,000.00	$1,994,000.00	
4	7/1/2017	$232,532.20	$22,532.20	$210,000.00	$1,784,000.00	$1,784,000.00	$255,064.40
5	1/1/2018	$20,159.20	$20,159.20	$0.00	$1,784,000.00	$1,784,000.00	
6	7/1/2018	$237,159.20	$20,159.20	$217,000.00	$1,567,000.00	$1,567,000.00	$257,318.40
7	1/1/2019	$17,707.10	$17,707.10	$0.00	$1,567,000.00	$1,567,000.00	
8	7/1/2019	$242,707.10	$17,707.10	$225,000.00	$1,342,000.00	$1,342,000.00	$260,414.20
9	1/1/2020	$15,164.60	$15,164.60	$0.00	$1,342,000.00	$1,342,000.00	
10	7/1/2020	$248,164.60	$15,164.60	$233,000.00	$1,109,000.00	$1,109,000.00	$263,329.20
11	1/1/2021	$12,531.70	$12,531.70	$0.00	$1,109,000.00	$1,109,000.00	
12	7/1/2021	$253,531.70	$12,531.70	$241,000.00	$868,000.00	$868,000.00	$266,063.40
13	1/1/2022	$9,808.40	$9,808.40	$0.00	$868,000.00	$868,000.00	
14	7/1/2022	$259,808.40	$9,808.40	$250,000.00	$618,000.00	$618,000.00	$269,616.80
15	1/1/2023	$6,983.40	$6,983.40	$0.00	$618,000.00	$618,000.00	
16	7/1/2023	$205,983.40	$6,983.40	$199,000.00	$419,000.00	$419,000.00	$212,966.80
17	1/1/2024	$4,734.70	$4,734.70	$0.00	$419,000.00	$419,000.00	
18	7/1/2024	$210,734.70	$4,734.70	$206,000.00	$213,000.00	$213,000.00	$215,469.40
19	1/1/2025	$2,406.90	$2,406.90	$0.00	$213,000.00	$213,000.00	
20	7/1/2025	$215,406.90	$2,406.90	$213,000.00	$0.00	$0.00	$217,813.80

EXHIBIT A

SCHEDULE FOR PAYMENT OF INSTALLMENTS OF PRINCIPAL

Date Maturing	Principal Amount
07/01/2016	$206,000
07/01/2017	210,000
07/01/2018	217,000
07/01/2019	225,000
07/01/2020	233,000
07/01/2021	241,000
07/01/2022	250,000
07/01/2023	199,000
07/01/2024	206,000
07/01/2025*	213,000

* Final principal installment.

$2,200,000

City of West Wendover, Nevada
General Obligation (Limited Tax) Medium-Term Bond
Series 2015

Debt Service Schedule

Part 1 of 2

Date	Principal	Coupon	Interest	Total P+I	Fiscal Total
07/14/2015	-	-	-	-	-
01/01/2016	-	-	23,064.56	23,064.56	-
06/30/2016	-	-	-	-	23,064.56
07/01/2016	206,000.00	2.260%	24,860.00	230,860.00	-
01/01/2017	-	-	22,532.20	22,532.20	-
06/30/2017	-	-	-	-	253,392.20
07/01/2017	210,000.00	2.260%	22,532.20	232,532.20	-
01/01/2018	-	-	20,159.20	20,159.20	-
06/30/2018	-	-	-	-	252,691.40
07/01/2018	217,000.00	2.260%	20,159.20	237,159.20	-
01/01/2019	-	-	17,707.10	17,707.10	-
06/30/2019	-	-	-	-	254,866.30
07/01/2019	225,000.00	2.260%	17,707.10	242,707.10	-
01/01/2020	-	-	15,164.60	15,164.60	-
06/30/2020	-	-	-	-	257,871.70
07/01/2020	233,000.00	2.260%	15,164.60	248,164.60	-
01/01/2021	-	-	12,531.70	12,531.70	-
06/30/2021	-	-	-	-	260,696.30
07/01/2021	241,000.00	2.260%	12,531.70	253,531.70	-
01/01/2022	-	-	9,808.40	9,808.40	-
06/30/2022	-	-	-	-	263,340.10
07/01/2022	250,000.00	2.260%	9,808.40	259,808.40	-
01/01/2023	-	-	6,983.40	6,983.40	-
06/30/2023	-	-	-	-	266,791.80
07/01/2023	199,000.00	2.260%	6,983.40	205,983.40	-
01/01/2024	-	-	4,734.70	4,734.70	-
06/30/2024	-	-	-	-	210,718.10
07/01/2024	206,000.00	2.260%	4,734.70	210,734.70	-
01/01/2025	-	-	2,406.90	2,406.90	-
06/30/2025	-	-	-	-	213,141.60
07/01/2025	213,000.00	2.260%	2,406.90	215,406.90	-
06/30/2026	-	-	-	-	215,406.90
Total	**$2,200,000.00**	**-**	**$271,980.96**	**$2,471,980.96**	**-**

$1,704,000

City of West Wendover, Nevada
General Obligation (Limited Tax) Medium-Term Bond
Street Improvement, Series 2015

Sources & Uses

Dated 07/14/2015 | Delivered 07/14/2015

Sources Of Funds	
Par Amount of Bonds	$1,704,000.00
Total Sources	**$1,704,000.00**

Uses Of Funds	
Total Underwriter's Discount (0.194%)	3,300.73
Costs of Issuance	49,510.90
Deposit to Project Construction Fund	1,651,000.00
Rounding Amount	188.37
Total Uses	**$1,704,000.00**

$361,000

City of West Wendover, Nevada
General Obligation (Limited Tax) Medium-Term Bond
Police Vehicles, Series 2015

Debt Service Schedule

Date	Principal	Coupon	Interest	Total P+I	Fiscal Total
07/14/2015	-	-	-	-	-
01/01/2016	-	-	3,784.68	3,784.68	-
06/30/2016	-	-	-	-	3,784.68
07/01/2016	48,000.00	2.260%	4,079.30	52,079.30	-
01/01/2017	-	-	3,536.90	3,536.90	-
06/30/2017	-	-	-	-	55,616.20
07/01/2017	49,000.00	2.260%	3,536.90	52,536.90	-
01/01/2018	-	-	2,983.20	2,983.20	-
06/30/2018	-	-	-	-	55,520.10
07/01/2018	50,000.00	2.260%	2,983.20	52,983.20	-
01/01/2019	-	-	2,418.20	2,418.20	-
06/30/2019	-	-	-	-	55,401.40
07/01/2019	52,000.00	2.260%	2,418.20	54,418.20	-
01/01/2020	-	-	1,830.60	1,830.60	-
06/30/2020	-	-	-	-	56,248.80
07/01/2020	53,000.00	2.260%	1,830.60	54,830.60	-
01/01/2021	-	-	1,231.70	1,231.70	-
06/30/2021	-	-	-	-	56,062.30
07/01/2021	54,000.00	2.260%	1,231.70	55,231.70	-
01/01/2022	-	-	621.50	621.50	-
06/30/2022	-	-	-	-	55,853.20
07/01/2022	55,000.00	2.260%	621.50	55,621.50	-
06/30/2023	-	-	-	-	55,621.50
Total	**$361,000.00**	**-**	**$33,108.18**	**$394,108.18**	**-**

Yield Statistics

Bond Year Dollars	$1,464.96
Average Life	4.058 Years
Average Coupon	2.2599997%
Net Interest Cost (NIC)	2.3077327%
True Interest Cost (TIC)	2.3109418%
Bond Yield for Arbitrage Purposes	2.2600851%
All Inclusive Cost (AIC)	3.0904151%

IRS Form 8038

Net Interest Cost	2.2599997%
Weighted Average Maturity	4.058 Years

$361,000

City of West Wendover, Nevada
General Obligation (Limited Tax) Medium-Term Bond
Police Vehicles, Series 2015

Sources & Uses

Dated 07/14/2015 | Delivered 07/14/2015

Sources Of Funds	
Par Amount of Bonds	$361,000.00
Total Sources	**$361,000.00**

Uses Of Funds	
Total Underwriter's Discount (0.194%)	699.27
Costs of Issuance	10,489.10
Deposit to Project Construction Fund	350,000.00
Rounding Amount	(188.37)
Total Uses	**$361,000.00**

City of West Wendover
Outstanding Loans - Cur

Loan-Fund/Dept	Police Vehicles - General/PD				Florence Way - General/Streets (RTC Funds Dedicated)			
Date	7/14/2015				7/14/2015			
Accts:LT/ST/Int		10-54-815	10-54-810					
Financer/Loan ID/Int%	Zions	3.0000%			Zions	3.0000%		
Reserve/Years/Amount			5 years	361,000.00			10 years	1,839,000.00

Payments:	PAYMENT	INTEREST	PRINCIPAL	BALANCE	PAYMENT	INTEREST	PRINCIPAL	BALANCE
Jul-15	-			361,000.00	-			1,839,000.00
Aug-15	-			361,000.00	-			1,839,000.00
Sep-15	-			361,000.00	-			1,839,000.00
Oct-15	-			361,000.00	-			1,839,000.00
Nov-15	-			361,000.00	-			1,839,000.00
Dec-15	-			361,000.00	-			1,839,000.00
Jan-16	3,784.68	3,784.68		361,000.00	19,279.88	19,279.88		1,839,000.00
Feb-16	-			361,000.00	-			1,839,000.00
Mar-16	-			361,000.00	-			1,839,000.00
Apr-16	-			361,000.00	-			1,839,000.00
May-16	-			361,000.00	-			1,839,000.00
Jun-16	-			361,000.00	-			1,839,000.00
Jul-16	52,079.30	4,079.30	48,000.00	313,000.00	178,780.70	20,780.70	158,000.00	1,681,000.00
Aug-16	-			313,000.00	-			1,681,000.00
Sep-16	-			313,000.00	-			1,681,000.00
Oct-16	-			313,000.00	-			1,681,000.00
Nov-16	-			313,000.00	-			1,681,000.00
Dec-16	-			313,000.00	-			1,681,000.00
Jan-17	3,536.90	3,536.90		313,000.00	18,995.30	18,995.30		1,681,000.00
Feb-17	-			313,000.00	-			1,681,000.00
Mar-17	-			313,000.00	-			1,681,000.00
Apr-17	-			313,000.00	-			1,681,000.00
May-17	-			313,000.00	-			1,681,000.00
Jun-17	-			313,000.00	-			1,681,000.00
Jul-17	52,536.90	3,536.90	49,000.00	264,000.00	179,995.30	18,995.30	161,000.00	1,520,000.00
Aug-17	-			264,000.00	-			1,520,000.00
Sep-17	-			264,000.00	-			1,520,000.00
Oct-17	-			264,000.00	-			1,520,000.00
Nov-17	-			264,000.00	-			1,520,000.00
Dec-17	-			264,000.00	-			1,520,000.00
Jan-18	2,983.20	2,983.20		264,000.00	17,176.00	17,176.00		1,520,000.00
Feb-18	-			264,000.00	-			1,520,000.00
Mar-18	-			264,000.00	-			1,520,000.00
Apr-18	-			264,000.00	-			1,520,000.00
May-18	-			264,000.00	-			1,520,000.00
Jun-18	-			264,000.00	-			1,520,000.00
Jul-18	52,983.20	2,983.20	50,000.00	214,000.00	184,176.00	17,176.00	167,000.00	1,353,000.00
Aug-18	-			214,000.00	-			1,353,000.00
Sep-18	-			214,000.00	-			1,353,000.00
Oct-18	-			214,000.00	-			1,353,000.00
Nov-18	-			214,000.00	-			1,353,000.00
Dec-18	-			214,000.00	-			1,353,000.00
Jan-19	2,418.20	2,418.20		214,000.00	15,288.90	15,288.90		1,353,000.00

City of West Wendover
Outstanding Loans - Cur

Loan-Fund/Dept	Police Vehicles - General/PD				Florence Way - General/Streets (RTC Funds Dedicated)			
Date	7/14/2015				7/14/2015			
Accts:LT/ST/Int		10-54-815	10-54-810					
Financer/Loan ID/Int%	Zions	3.0000%			Zions	3.0000%		
Reserve/Years/Amount			5 years	361,000.00			10 years	1,839,000.00
Payments:	PAYMENT	INTEREST	PRINCIPAL	BALANCE	PAYMENT	INTEREST	PRINCIPAL	BALANCE
Jan-20	1,830.60	1,830.60		162,000.00	13,334.00	13,334.00		1,180,000.00
Feb-20	-			162,000.00	-			1,180,000.00
Mar-20	-			162,000.00	-			1,180,000.00
Apr-20	-			162,000.00	-			1,180,000.00
May-20	-			162,000.00	-			1,180,000.00
Jun-20	-			162,000.00	-			1,180,000.00
Jul-20	54,830.60	1,830.60	53,000.00	109,000.00	193,334.00	13,334.00	180,000.00	1,000,000.00
Aug-20	-			109,000.00	-			1,000,000.00
Sep-20	-			109,000.00	-			1,000,000.00
Oct-20	-			109,000.00	-			1,000,000.00
Nov-20	-			109,000.00	-			1,000,000.00
Dec-20	-			109,000.00	-			1,000,000.00
Jan-21	1,231.70	1,231.70		109,000.00	11,300.00	11,300.00		1,000,000.00
Feb-21	-			109,000.00	-			1,000,000.00
Mar-21	-			109,000.00	-			1,000,000.00
Apr-21	-			109,000.00	-			1,000,000.00
May-21	-			109,000.00	-			1,000,000.00
Jun-21	-			109,000.00	-			1,000,000.00
Jul-21	55,231.70	1,231.70	54,000.00	55,000.00	198,300.00	11,300.00	187,000.00	813,000.00
Aug-21	-			55,000.00	-			813,000.00
Sep-21	-			55,000.00	-			813,000.00
Oct-21	-			55,000.00	-			813,000.00
Nov-21	-			55,000.00	-			813,000.00
Dec-21	-			55,000.00	-			813,000.00
Jan-22	621.50	621.50		55,000.00	9,186.90	9,186.90		813,000.00
Feb-22	-			55,000.00	-			813,000.00
Mar-22	-			55,000.00	-			813,000.00
Apr-22	-			55,000.00	-			813,000.00
May-22	-			55,000.00	-			813,000.00
Jun-22	-			55,000.00	-			813,000.00
Jul-22	55,621.50	621.50	55,000.00	-	204,186.90	9,186.90	195,000.00	618,000.00
Aug-22	-			-	-			618,000.00
Sep-22	-			-	-			618,000.00
Oct-22	-			-	-			618,000.00
Nov-22	-			-	-			618,000.00
Dec-22	-			-	-			618,000.00
Jan-23	-			-	6,983.40	6,983.40		618,000.00
Feb-23	-			-	-			618,000.00
Mar-23	-			-	-			618,000.00
Apr-23	-			-	-			618,000.00
May-23	-			-	-			618,000.00
Jun-23	-			-	-			618,000.00
Jul-23	-				205,983.40	6,983.40	199,000.00	419,000.00

City of West Wendover
Outstanding Loans - Cur

Loan-Fund/Dept	Police Vehicles - General/PD				Florence Way - General/Streets (RTC Funds Dedicated)			
Date	7/14/2015				7/14/2015			
Accts:LT/ST/Int		10-54-815	10-54-810					
Financer/Loan ID/Int%	Zions	3.0000%			Zions	3.0000%		
Reserve/Years/Amount			5 years	361,000.00			10 years	1,839,000.00
Payments:	PAYMENT	INTEREST	PRINCIPAL	BALANCE	PAYMENT	INTEREST	PRINCIPAL	BALANCE
Jul-24	-			-	210,734.70	4,734.70	206,000.00	213,000.00
Aug-24	-			-	-			213,000.00
Sep-24	-			-	-			213,000.00
Oct-24					-			213,000.00
Nov-24					-			213,000.00
Dec-24					-			213,000.00
Jan-25					2,406.90	2,406.90		213,000.00
Feb-25					-			213,000.00
Mar-25					-			213,000.00
Apr-25					-			213,000.00
May-25					-			213,000.00
Jun-25					-			213,000.00
Jul-25					215,406.90	2,406.90	213,000.00	-

DEBT SERVICE SCHEDULE

$2,200,000

GO BOND SERIES 2015

JULY 14, 2015

($1,839,000- FLORENCE WAY)

($361,000 POLICE VEHICLES)

$2,200,000

City of West Wendover, Nevada
General Obligation (Limited Tax) Medium-Term Bond
Series 2015

Debt Service Schedule

Date	Principal	Coupon	Interest	Total P+I	Fiscal Total
07/14/2015	-	-	-	-	-
01/01/2016	-	-	23,064.56	23,064.56	-
06/30/2016	-	-	-	-	23,064.56
07/01/2016	206,000.00	2.260%	24,860.00	230,860.00	-
01/01/2017	-	-	22,532.20	22,532.20	-
06/30/2017	-	-	-	-	253,392.20
07/01/2017	210,000.00	2.260%	22,532.20	232,532.20	-
01/01/2018	-	-	20,159.20	20,159.20	-
06/30/2018	-	-	-	-	252,691.40
07/01/2018	217,000.00	2.260%	20,159.20	237,159.20	-
01/01/2019	-	-	17,707.10	17,707.10	-
06/30/2019	-	-	-	-	254,866.30
07/01/2019	225,000.00	2.260%	17,707.10	242,707.10	-
01/01/2020	-	-	15,164.60	15,164.60	-
06/30/2020	-	-	-	-	257,871.70
07/01/2020	233,000.00	2.260%	15,164.60	248,164.60	-
01/01/2021	-	-	12,531.70	12,531.70	-
06/30/2021	-	-	-	-	260,696.30
07/01/2021	241,000.00	2.260%	12,531.70	253,531.70	-
01/01/2022	-	-	9,808.40	9,808.40	-
06/30/2022	-	-	-	-	263,340.10
07/01/2022	250,000.00	2.260%	9,808.40	259,808.40	-
01/01/2023	-	-	6,983.40	6,983.40	-
06/30/2023	-	-	-	-	266,791.80
07/01/2023	199,000.00	2.260%	6,983.40	205,983.40	-
01/01/2024	-	-	4,734.70	4,734.70	-
06/30/2024	-	-	-	-	210,718.10
07/01/2024	206,000.00	2.260%	4,734.70	210,734.70	-
01/01/2025	-	-	2,406.90	2,406.90	-
06/30/2025	-	-	-	-	213,141.60
07/01/2025	213,000.00	2.260%	2,406.90	215,406.90	-
06/30/2026	-	-	-	-	215,406.90
Total	**$2,200,000.00**	**-**	**$271,980.96**	**$2,471,980.96**	**-**

$1,704,000

City of West Wendover, Nevada
General Obligation (Limited Tax) Medium-Term Bond
Street Improvement, Series 2015

Sources & Uses

Dated 07/14/2015 | Delivered 07/14/2015

Sources Of Funds	
Par Amount of Bonds	$1,704,000.00
Total Sources	**$1,704,000.00**

Uses Of Funds	
Total Underwriter's Discount (0.194%)	3,300.73
Costs of Issuance	49,510.90
Deposit to Project Construction Fund	1,651,000.00
Rounding Amount	188.37
Total Uses	**$1,704,000.00**

$361,000

City of West Wendover, Nevada
General Obligation (Limited Tax) Medium-Term Bond
Police Vehicles, Series 2015

Debt Service Schedule

Date	Principal	Coupon	Interest	Total P+I	Fiscal Total
07/14/2015	-	-	-	-	-
01/01/2016	-	-	3,784.68	3,784.68	-
06/30/2016	-	-	-	-	3,784.68
07/01/2016	48,000.00	2.260%	4,079.30	52,079.30	-
01/01/2017	-	-	3,536.90	3,536.90	-
06/30/2017	-	-	-	-	55,616.20
07/01/2017	49,000.00	2.260%	3,536.90	52,536.90	-
01/01/2018	-	-	2,983.20	2,983.20	-
06/30/2018	-	-	-	-	55,520.10
07/01/2018	50,000.00	2.260%	2,983.20	52,983.20	-
01/01/2019	-	-	2,418.20	2,418.20	-
06/30/2019	-	-	-	-	55,401.40
07/01/2019	52,000.00	2.260%	2,418.20	54,418.20	-
01/01/2020	-	-	1,830.60	1,830.60	-
06/30/2020	-	-	-	-	56,248.80
07/01/2020	53,000.00	2.260%	1,830.60	54,830.60	-
01/01/2021	-	-	1,231.70	1,231.70	-
06/30/2021	-	-	-	-	56,062.30
07/01/2021	54,000.00	2.260%	1,231.70	55,231.70	-
01/01/2022	-	-	621.50	621.50	-
06/30/2022	-	-	-	-	55,853.20
07/01/2022	55,000.00	2.260%	621.50	55,621.50	-
06/30/2023	-	-	-	-	55,621.50
Total	**$361,000.00**	**-**	**$33,108.18**	**$394,108.18**	**-**

Yield Statistics

Bond Year Dollars	$1,464.96
Average Life	4.058 Years
Average Coupon	2.2599997%
Net Interest Cost (NIC)	2.3077327%
True Interest Cost (TIC)	2.3109418%
Bond Yield for Arbitrage Purposes	2.2600851%
All Inclusive Cost (AIC)	3.0904151%

IRS Form 8038

Net Interest Cost	2.2599997%
Weighted Average Maturity	4.058 Years

$361,000

City of West Wendover, Nevada
General Obligation (Limited Tax) Medium-Term Bond
Police Vehicles, Series 2015

Sources & Uses

Dated 07/14/2015 | Delivered 07/14/2015

Sources Of Funds	
Par Amount of Bonds	$361,000.00
Total Sources	**$361,000.00**

Uses Of Funds	
Total Underwriter's Discount (0.194%)	699.27
Costs of Issuance	10,489.10
Deposit to Project Construction Fund	350,000.00
Rounding Amount	(188.37)
Total Uses	**$361,000.00**

City of West Wendover
Outstanding Loans - Cur

Loan-Fund/Dept	Police Vehicles - General/PD				Florence Way - General/Streets (RTC Funds Dedicated)			
Date	7/14/2015				7/14/2015			
Accts:LT/ST/Int		10-54-815	10-54-810					
Financer/Loan ID/Int%	Zions	3.0000%			Zions	3.0000%		
Reserve/Years/Amount			5 years	361,000.00			10 years	1,839,000.00

Payments:	PAYMENT	INTEREST	PRINCIPAL	BALANCE	PAYMENT	INTEREST	PRINCIPAL	BALANCE
Jul-15	-			361,000.00	-			1,839,000.00
Aug-15	-			361,000.00	-			1,839,000.00
Sep-15	-			361,000.00	-			1,839,000.00
Oct-15	-			361,000.00	-			1,839,000.00
Nov-15	-			361,000.00	-			1,839,000.00
Dec-15	-			361,000.00	-			1,839,000.00
Jan-16	3,784.68	3,784.68		361,000.00	19,279.88	19,279.88		1,839,000.00
Feb-16	-			361,000.00	-			1,839,000.00
Mar-16	-			361,000.00	-			1,839,000.00
Apr-16	-			361,000.00	-			1,839,000.00
May-16	-			361,000.00	-			1,839,000.00
Jun-16	-			361,000.00	-			1,839,000.00
Jul-16	52,079.30	4,079.30	48,000.00	313,000.00	178,780.70	20,780.70	158,000.00	1,681,000.00
Aug-16	-			313,000.00	-			1,681,000.00
Sep-16	-			313,000.00	-			1,681,000.00
Oct-16	-			313,000.00	-			1,681,000.00
Nov-16	-			313,000.00	-			1,681,000.00
Dec-16	-			313,000.00	-			1,681,000.00
Jan-17	3,536.90	3,536.90		313,000.00	18,995.30	18,995.30		1,681,000.00
Feb-17	-			313,000.00	-			1,681,000.00
Mar-17	-			313,000.00	-			1,681,000.00
Apr-17	-			313,000.00	-			1,681,000.00
May-17	-			313,000.00	-			1,681,000.00
Jun-17	-			313,000.00	-			1,681,000.00
Jul-17	52,536.90	3,536.90	49,000.00	264,000.00	179,995.30	18,995.30	161,000.00	1,520,000.00
Aug-17	-			264,000.00	-			1,520,000.00
Sep-17	-			264,000.00	-			1,520,000.00
Oct-17	-			264,000.00	-			1,520,000.00
Nov-17	-			264,000.00	-			1,520,000.00
Dec-17	-			264,000.00	-			1,520,000.00
Jan-18	2,983.20	2,983.20		264,000.00	17,176.00	17,176.00		1,520,000.00
Feb-18	-			264,000.00	-			1,520,000.00
Mar-18	-			264,000.00	-			1,520,000.00
Apr-18	-			264,000.00	-			1,520,000.00
May-18	-			264,000.00	-			1,520,000.00
Jun-18	-			264,000.00	-			1,520,000.00
Jul-18	52,983.20	2,983.20	50,000.00	214,000.00	184,176.00	17,176.00	167,000.00	1,353,000.00
Aug-18	-			214,000.00	-			1,353,000.00
Sep-18	-			214,000.00	-			1,353,000.00
Oct-18	-			214,000.00	-			1,353,000.00
Nov-18	-			214,000.00	-			1,353,000.00
Dec-18	-			214,000.00	-			1,353,000.00

City of West Wendover
Outstanding Loans - Cur

Loan-Fund/Dept	Police Vehicles - General/PD				Florence Way - General/Streets (RTC Funds Dedicated)			
Date	7/14/2015				7/14/2015			
Accts:LT/ST/Int		10-54-815	10-54-810					
Financer/Loan ID/Int%	Zions	3.0000%			Zions	3.0000%		
Reserve/Years/Amount			5 years	361,000.00			10 years	1,839,000.00
Payments:	PAYMENT	INTEREST	PRINCIPAL	BALANCE	PAYMENT	INTEREST	PRINCIPAL	BALANCE
Jan-20	1,830.60	1,830.60		162,000.00	13,334.00	13,334.00		1,180,000.00
Feb-20	-			162,000.00	-			1,180,000.00
Mar-20	-			162,000.00	-			1,180,000.00
Apr-20	-			162,000.00	-			1,180,000.00
May-20	-			162,000.00	-			1,180,000.00
Jun-20	-			162,000.00	-			1,180,000.00
Jul-20	54,830.60	1,830.60	53,000.00	109,000.00	193,334.00	13,334.00	180,000.00	1,000,000.00
Aug-20	-			109,000.00	-			1,000,000.00
Sep-20	-			109,000.00	-			1,000,000.00
Oct-20	-			109,000.00	-			1,000,000.00
Nov-20	-			109,000.00	-			1,000,000.00
Dec-20	-			109,000.00	-			1,000,000.00
Jan-21	1,231.70	1,231.70		109,000.00	11,300.00	11,300.00		1,000,000.00
Feb-21	-			109,000.00	-			1,000,000.00
Mar-21	-			109,000.00	-			1,000,000.00
Apr-21	-			109,000.00	-			1,000,000.00
May-21	-			109,000.00	-			1,000,000.00
Jun-21	-			109,000.00	-			1,000,000.00
Jul-21	55,231.70	1,231.70	54,000.00	55,000.00	198,300.00	11,300.00	187,000.00	813,000.00
Aug-21	-			55,000.00	-			813,000.00
Sep-21	-			55,000.00	-			813,000.00
Oct-21	-			55,000.00	-			813,000.00
Nov-21	-			55,000.00	-			813,000.00
Dec-21	-			55,000.00	-			813,000.00
Jan-22	621.50	621.50		55,000.00	9,186.90	9,186.90		813,000.00
Feb-22	-			55,000.00	-			813,000.00
Mar-22	-			55,000.00	-			813,000.00
Apr-22	-			55,000.00	-			813,000.00
May-22	-			55,000.00	-			813,000.00
Jun-22	-			55,000.00	-			813,000.00
Jul-22	55,621.50	621.50	55,000.00	-	204,186.90	9,186.90	195,000.00	618,000.00
Aug-22	-			-	-			618,000.00
Sep-22	-			-	-			618,000.00
Oct-22	-			-	-			618,000.00
Nov-22	-			-	-			618,000.00
Dec-22	-			-	-			618,000.00
Jan-23	-			-	6,983.40	6,983.40		618,000.00
Feb-23	-			-	-			618,000.00
Mar-23	-			-	-			618,000.00
Apr-23	-			-	-			618,000.00
May-23	-			-	-			618,000.00
Jun-23	-			-	-			618,000.00

City of West Wendover
Outstanding Loans - Cur

Loan-Fund/Dept	Police Vehicles - General/PD				Florence Way - General/Streets (RTC Funds Dedicated)			
Date	7/14/2015				7/14/2015			
Accts:LT/ST/Int		10-54-815	10-54-810					
Financer/Loan ID/Int%	Zions	3.0000%			Zions	3.0000%		
Reserve/Years/Amount			5 years	361,000.00			10 years	1,839,000.00
Payments:	**PAYMENT**	**INTEREST**	**PRINCIPAL**	**BALANCE**	**PAYMENT**	**INTEREST**	**PRINCIPAL**	**BALANCE**
Jul-24	-			-	210,734.70	4,734.70	206,000.00	213,000.00
Aug-24	-			-	-			213,000.00
Sep-24	-			-	-			213,000.00
Oct-24					-			213,000.00
Nov-24					-			213,000.00
Dec-24					-			213,000.00
Jan-25					2,406.90	2,406.90		213,000.00
Feb-25					-			213,000.00
Mar-25					-			213,000.00
Apr-25					-			213,000.00
May-25					-			213,000.00
Jun-25					-			213,000.00
Jul-25					215,406.90	2,406.90	213,000.00	-

$8,906,800

City of West Wendover, Nevada
Interim Debenture (Fire Station Project)
(Additionally Secured by Pledged Revenues) Series 2022

Debt Service Schedule

Date	Principal	Coupon	Interest	Total P+I	Fiscal Total
03/30/2022	-	-	-	-	-
07/01/2022	-	-	7,389.20	7,389.20	-
01/01/2023	-	-	69,202.70	69,202.70	-
06/30/2023	-	-	-	-	76,591.90
07/01/2023	-	-	154,978.32	154,978.32	-
01/01/2024	8,906,800.00	3.480%	154,978.32	9,061,778.32	-
06/30/2024	-	-	-	-	9,216,756.64
Total	**$8,906,800.00**	-	**$386,548.54**	**$9,293,348.54**	-

Yield Statistics

Bond Year Dollars	$15,611.64
Average Life	1.753 Years
Average Coupon	2.4760276%
Net Interest Cost (NIC)	2.6186583%
True Interest Cost (TIC)	2.6088412%
Bond Yield for Arbitrage Purposes	2.4627786%
All Inclusive Cost (AIC)	3.0180420%

IRS Form 8038

Net Interest Cost	2.4760276%
Weighted Average Maturity	1.753 Years

ZIONS PUBLIC FINANCE
230 Las Vegas Boulevard South | Suite 200 | Las Vegas, NV 89101
Phone: (702) 796-7080 | Fax: (702) 796-2975

March 14, 2022

Via e-mail

Joshua Lentz
Western Alliance Business Trust, a Delaware statutory trust
One East Washington Street, Suite 1400
Phoenix, AZ 85004
jlentz@westernalliancebank.com
Phone: (602) 346-7467

CLOSING MEMO

RE: $8,906,800 City of West Wendover, Nevada Interim Debenture (Fire Station Project), Series 2022

CLOSING MEMO

The closing for the above-captioned Interim Debenture (the "Debenture") will occur on Wednesday, March 30, 2022.

Prior to closing, the Debenture will be registered as directed by Western Alliance Business Trust, a Delaware statutory trust and a representative of Western Alliance Business Trust, a Delaware statutory trust (the "Purchaser") will be required to sign the Purchaser's Receipt. The Purchaser's Receipt will be included with the other closing certificates and the unqualified opinion of Sherman & Howard LLC in the transcript documenting the transaction.

The following summarizes the sources and uses of funds for the Debenture

Sources of Funds	
Maximum Par Amount	$ 8,906,800.00
Planned Issuer Equity Contributions	85,000.00
Total Sources	**8,991,800.00**
Uses of Funds	
Total Underwriter's Discount	22,267.00
Costs of Issuance	62,733.00
Maximum Deposit to Project Construction Fund	8,906,800.00
Total Uses	**$ 8,991,800.00**

PURCHASER TO WIRE FUNDS TO THE CITY

Purchaser to wire $840,000 to the City representing the first draw on the Debenture as follows:

$840,000.00 **City of West Wendover**
Bank: Nevada State Bank
ABA# 122400779
Account Name: City of West Wendover/General
Account Number: 0452003700

CITY TO WIRE FUNDS TO THE PURCHASER'S COUNSEL

City to wire funds to Stradling Yocca Carlson & Rauth for the Purchaser's counsel fee in the amount of **$10,000.00** to:

$10,000.00 **City National Bank**
18111 VonKarman Avenue, Suite 450, Irvine,
California 92612
Routing # 122-016066
Account # 023938545 (Stradling Yocca Carlson & Rauth)
(Client/Matter No. 200759-0057)

CITY TO WIRE FUNDS TO THE PURCHASER

The City to wire funds to Western Alliance Business Trust, a Delaware statutory trust in the amount of **$22,267.00** for the Purchaser's origination fee to:

$22,267.00 **Western Alliance Business Trust, a Delaware statutory trust**
ABA# 122105980
Account Number: 7501990050
REF: City of West Wendover, Nevada Fire Station Project

Attached is a pro forma debt-service schedule for the Debenture.

If I can be of any further assistance, please do not hesitate to call.

Respectfully,

Andrew A. Artusa
Managing Director

cc: Regina Curtis
Cherry Jimenez-Cabarloc
Chris Melville
Debra Sanchez
Kendra Follett
Jim Lane
Scott Shaver
Eileen Rendulic- Moss
Trisha Van Cleve

Western Alliance
Public & Nonprofit Finance

March 4, 2022

City of West Wendover, Nevada
1111 N. Gene L. Jones Way
West Wendover, Nevada 89883

Re: City of West Wendover, Nevada, Consolidated Tax Revenue Interim Debenture (West Wendover Fire Station Project), Series 2022 (the "Interim Debenture")

Ladies and Gentlemen:

Western Alliance Business Trust is pleased to provide the following commitment letter for the Interim Debenture which has received credit approval, pending final due diligence, receipt of a concurrence letter from the USDA, document review and normal "out provisions".

Borrower:	City of West Wendover, Nevada (the "Borrower" and "City")
Purchaser:	Western Alliance Business Trust, a Delaware statutory trust (the "Purchaser")
Permanent Lender:	United States Department of Agriculture ("USDA")
Permanent Financing:	USDA Direct Loan – Not to exceed $8,906,800 ("USDA Direct Loans")
Borrower Cash Contribution:	$85,000
Commitment Amount:	Up to $8,906,800
Project:	Acquire, improve, equip, operate and maintain fire protection projects for the West Wendover Fire Station (the "Project").
Purpose:	The proceeds from the Interim Debenture will be used to: 1) pay the costs of the Project; and 2) pay costs of issuance associated with the Interim Debenture.
Final Maturity:	January 1, 2024.
Interest Payments:	Semi-annual interest payments on January 1 and July 1 commencing on July 1, 2022 through January 1, 2024. Interest on the Interim Debenture is to be computed on the basis of a year comprised of 360 days consisting of twelve (12) months of thirty (30) days each.
Principal Payments:	Interim Debenture due upon full prepayment or Final Maturity Date.
Interest Rate Pricing:	The Interim Debenture will be funded at par and at a fixed rate of interest based on the following formula: 79% of the sum of the 2-Year USD Semi-Annual Interest Rate Swap Rate plus 2.75% (tax-exempt fixed rate). The interest rate is **3.48%**. The interest rate will be held through Thursday, March 31, 2022. See Exhibit A – Interest Rate Lock herein.

Reserve Requirement: Not required for the Interim Debenture.

Prepayment Provisions: The Interim Debenture may be prepaid, at the option of the Borrower in whole, or in part, on any date on or after January 1, 2023, at par plus accrued interest to the date of prepayment, without premium.

Security: The Interim Debenture will be secured by a lien on Pledged Revenues (as defined below) and the proceeds of the takeout financing.

Pledged Revenues: The Pledged Revenues are comprised of 15% of certain proceeds of liquor taxes, tobacco taxes, real property transfer taxes, basic governmental services tax and basic and supplemental sales taxes distributed to the City (the "Pledged Revenues").

Funds: In connection with the financing of the Interim Debenture, there shall be established with Western Alliance Bank the following bancontrol funds:

1) Project Fund; and

2) Costs of Issuance Fund.

The initial disbursement of funds will be made to the Borrower upon review and approval of such costs by the Purchaser. All subsequent disbursements of funds will be made to the Borrower upon review and approval of such costs by the USDA. The Purchaser will only disburse funds upon receipt of approval by the USDA.

Advances: The Interim Debenture will be disbursed to a Project Fund pursuant to a draw schedule fixed at closing and amounts on deposit in the Project Fund will be available to fund Project costs as set forth below.

Advances will be made to the Borrower from the Project Fund up to and including December 31, 2023 upon receipt of an advance request not later than the Business Day which is ten (10) Business Days immediately prior to the day of the requested advance and at least ten (10) Business Days immediately preceding the commitment termination date and further conditioned upon review and approval of the Project costs set forth in such advance request by the Purchaser and the USDA.

In the event of a federal shut down or other event causing a delay in USDA operations that prevents the USDA's timely approval of any draw request that is otherwise approved by the Purchaser, the Purchaser shall proceed with the advancement of such funds to the Trustee, with the general understanding that USDA has agreed to provide its approval of such draw request after operations recommence and to reimburse the Purchaser for any additional costs directly attributable to such delay.

Legal Opinion(s):

Opinion of Bond Counsel, among other things, as to:

1) treatment of interest payments under the Interim Debenture as exempt from federal income taxes;
2) the validity and enforceability of the Interim Debenture and the Pledged Revenues being duly and validly authorized pursuant to the law; and
3) the Interim Debenture is secured by a valid lien on Pledged Revenues and the proceeds of the takeout financing.

Bond Counsel shall deliver a supplemental opinion as to the Interim Debenture being exempt from registration pursuant to the Securities Act of 1933, as amended.

A certificate of the City Attorney will be delivered at closing in the form acceptable to the Purchaser and the Purchaser's Counsel.

Additional Obligations:

The City may issue additional obligations on parity with the Interim Debenture.

Take-Out Financing:

The City will take all actions, as contemplated under Section 13 of the ordinance, to obtain financing from the USDA or any other financing source to provide funds to refund all or a portion of the Interim Debenture prior to maturity and apply all such funds upon receipt to prepay the Interim Debenture.

Documentation:

Bond Counsel will prepare all of the legal documentation, which will contain customary affirmative and negative covenants as well as usual representations and warranties for like situated borrowers acceptable to the Purchaser. Events of Default shall include those that are deemed standard and customary for transactions of this nature all of which shall be subject to satisfactory review by the Purchaser.

Conditions Precedent:

Prior to the funding of the Interim Debenture, the following conditions precedent shall have occurred, all of which shall be in form and substance satisfactory to the Purchaser and the Purchaser's Counsel:

1) satisfactory review by the Purchaser's Counsel of any outstanding agreements entered into by the Borrower which may impact the security for the Interim Debenture or the obligations of the Borrower with respect to repayment the Interim Debenture;
2) any authorizing resolution of the Borrower as required for the execution, delivery and repayment of the Interim Debenture;
3) opinions as required by the Purchaser and the Purchaser's Counsel;
4) properly executed loan documents in form and substance satisfactory to the Purchaser and the Purchaser's counsel evidencing or supporting the repayment of the Interim Debenture;
5) all other conditions as contemplated under the USDA Letter of Conditions;
6) a projected draw schedule delivered prior to closing; and
7) additional conditions precedent that the Purchaser and the Purchaser's Counsel consider customary and reasonably appropriate for the funding of the Interim Debenture.

Loan Treatment: The Original Purchaser will book the Interim Debenture as a loan, and, therefore, the Interim Debenture will be made under the following conditions:

1) the Interim Debenture shall not be registered or otherwise qualified for sale under the "Blue Sky" laws;
2) the Purchaser will satisfy the requirements of Municipal Securities Rulemaking Board Rule G-34(a)(i)(F), such that no CUSIP numbers will be obtained for the Interim Debenture (See "Assignment and Participation" herein);
3) no official statement or similar offering document has been prepared in connection with the private placement of the Interim Debenture;
4) the Interim Debenture will not settle through the DTC or any similar repository and will not be in book entry form; and
5) the Purchaser will sign a letter of representations in a form acceptable to Original Purchaser's Counsel and Bond Counsel.

Origination Fee: 25 basis points of the original principal amount of the Interim Debenture. No termination or other ongoing fees.

Expenses: All other out of pocket costs, including but not limited to Bond Counsel fee, Purchaser's origination fee, Purchaser's Counsel fees, with a cap of $10,000 (provided there is limited negotiation of the documentation), and other customary closing costs.

Bond Counsel: Sherman & Howard LLC / Reno, Nevada

Municipal Advisor: Zions Public Finance / Las Vegas, Nevada

Purchaser's Counsel: Stradling Yocca Carlson & Rauth, P.C. / Reno, Nevada

Pre-Closing Date: Monday, March 28, 2022 (Estimated)

Closing Date: Wednesday, March 30, 2022 (Estimated)

No Fiduciary Relationship: Inasmuch as the Interim Debenture represents a negotiated transaction, the City understands, and will confirm that the Purchaser is not acting as a fiduciary to the City, but rather is acting solely in its capacity as an investment for its own account. The District will acknowledge and agree that:

1) the transaction contemplated herein is an arm's length commercial transaction between the City and the Purchaser and its affiliates;
2) in connection with such transaction, the Purchaser and its affiliates are acting solely as a principal and not as an advisor including, without limitation, a "Municipal Advisor" as such term is defined in Section 15B of the Securities and Exchange Act of 1934, as amended, and the related final rules (the "Municipal Advisor Rules");
3) the Purchaser and its affiliates are relying on the bank exemption in the Municipal Advisor Rules;
4) the Purchaser and its affiliates have not provided any advice or assumed any advisory or fiduciary responsibility in favor of the City with respect to the transaction contemplated hereby and the discussions, undertakings and procedures leading

thereto;

5) the Purchaser and its affiliates have financial and other interests that differ from those of the City; and
6) the City has consulted with its own financial, legal, accounting, tax and other advisors, as applicable, to the extent it deemed appropriate.

Reporting Requirements:

The City shall provide the Purchaser with the following documentation and information within nine (9) months of the City's fiscal year end:

1) Audited financial statements of the City for the preceding fiscal year; and
2) Certification of the City that it is not aware of any default or Event of Default hereunder or in connection with the Interim Debenture.

The Borrower shall provide the Purchaser with its annual approved operating budget within one (1) month after its adoption.

The Purchaser shall receive notice of any material impact to the Borrower's financial position. The Borrower shall furnish at the Purchaser's request such additional information that the Purchaser may from time to time reasonably request.

Construction Monitoring:

The Borrower is required to provide monthly construction reports within 30 days of each monthly period. Construction reports to include the following due diligence items:

1) A summary of the Project status including pictures;
2) An update on Permitting, Design and Construction Progress;
3) A Project Budget including the approved budget, any change orders or budget reallocations, forecasted costs, amounts and percentages remaining to complete and use of contingency; and
4) A Project Schedule with milestone completion dates and variances.

Submitted on behalf of Western Alliance Bank and its affiliate, Western Alliance Business Trust.

Joshua J. Lentz
Senior Vice President

CITY OF WEST WENDOVER, NEVADA

By: _____

Name: Chris J. Melville

Title: City Manager

Date: 3-14-2022

CITY OF WEST WENDOVER, NEVADA
CONSOLIDATED TAX REVENUE INTERIM DEBENTURE
(WEST WENDOVER FIRE STATION PROJECT)

INTEREST RATE LOCK CALCULATION AS OF FRIDAY, MARCH 4, 2022

Western Alliance Business Trust (the "Lender") is pleased to provide to the City of West Wendover, Nevada (the "Borrower") the following Interest Rate Lock for the above-mentioned debenture (the "Construction Loan"), subject to delivery of certain letters from the United States Department of Agriculture, Rural Development and the Purchaser's additional due diligence and receipt and approval of all relevant documentation, for the execution and delivery of the Construction Loan.

NOT TO EXCEED AGGREGATE COMMITMENT:	$8,906,800.00
WEIGHTED AVERAGE MATURITY (ESTIMATED):	2 Years
ESTIMATED FUNDING DATE:	Wednesday, March 30, 2022
2 YEAR MID USD SEMI-ANNUAL 30/360 SWAP RATE[1]	1.650%
BANK SPREAD	2.750%
TAXABLE INTEREST RATE[1]	4.400%
TAX-EXEMPT MULTIPLIER[2]	79%
TAX-EXEMPT INTEREST RATE[3]	3.48%

(1) Bloomberg Finance L.P. - 2 Year Tenor USD Semi-Annual 30/360 Swap Rate as of Friday, March 4, 2022, 12:38:31 EST, rounded to the nearest one hundredth percentage. See below for Screen Shot.

(2) Based on a federal corporate tax rate of 21%.
(3) The interest rate is rounded to the nearest one hundredth and will expire if the Construction Bonds is not funded by Thursday, March 31, 2022.

BLOOMBERG FINANCE L.P. SCREEN SHOT OF USD SEMI-ANNUAL 30/360 SWAP RATES AS OF FRIDAY, MARCH 4, 2022, 12:38:31 EST

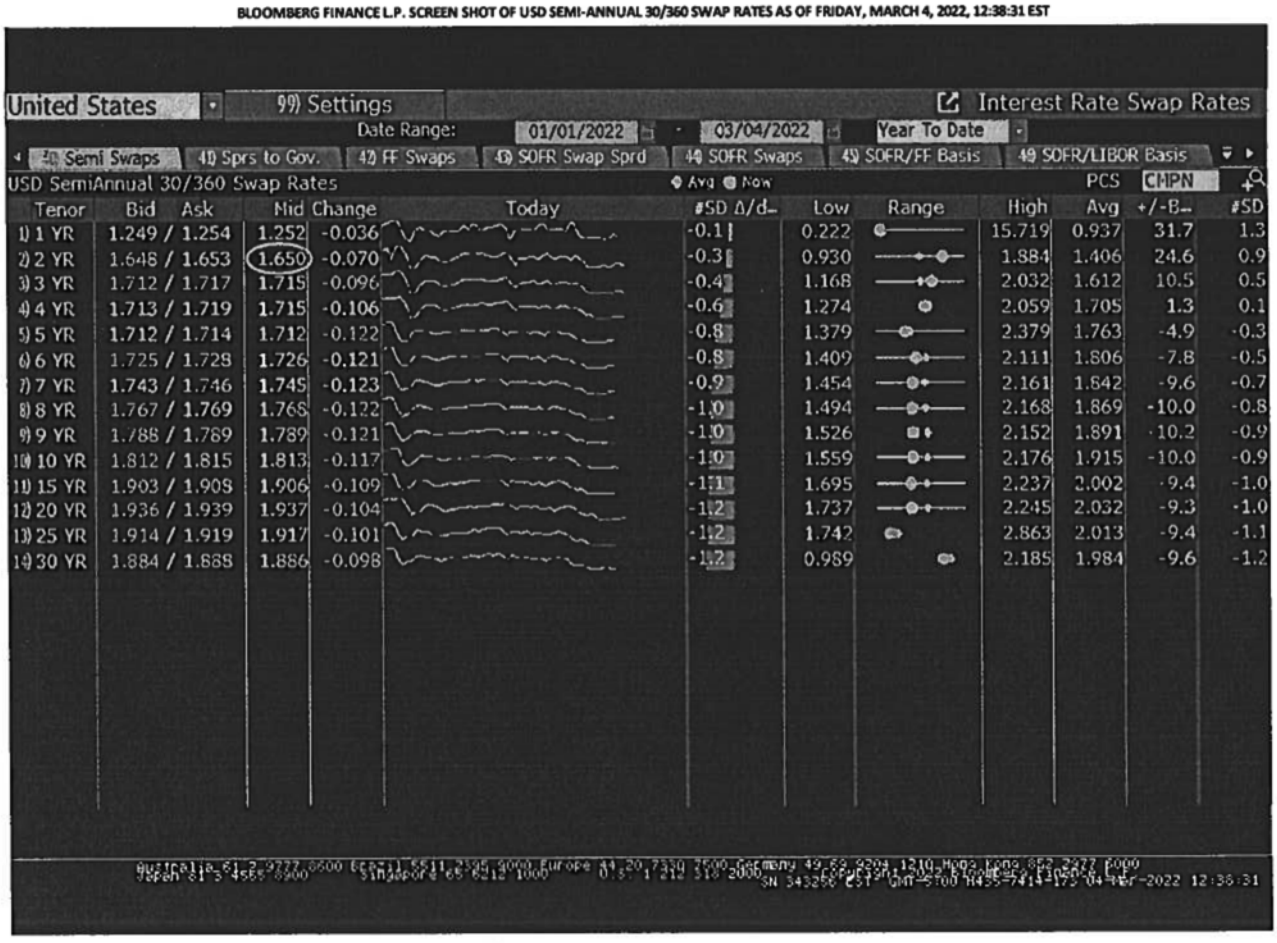

EXHIBIT 10D

$5,789,400

City of West Wendover, Nevada
Interim Debenture (Downtown Infastructure Project Phase I)
(Additionally Secured by Pledged Revenues) Series 2022

Aggregate Bond Balance

Date	Principal	Interest	Total P+I	Bond Balance	Fiscal Total
09/15/2022	-	-	-	-	-
02/01/2023	-	45,711.56	45,711.56	5,789,400.00	-
06/30/2023	-	-	-	5,789,400.00	45,711.56
07/01/2023	-	-	-	5,789,400.00	-
08/01/2023	-	132,287.79	132,287.79	5,789,400.00	-
02/01/2024	-	132,287.79	132,287.79	5,789,400.00	-
06/30/2024	-	-	-	5,789,400.00	264,575.58
07/01/2024	-	-	-	5,789,400.00	-
08/01/2024	5,789,400.00	132,287.79	5,921,687.79	-	-
06/30/2025	-	-	-	-	5,921,687.79
Total	**$5,789,400.00**	**$442,574.93**	**$6,231,974.93**	**-**	**-**

Par Amounts Of Selected Issues

2022 Downtown Project Interim Debenture	5,789,400.00
TOTAL	**5,789,400.00**

ZIONS PUBLIC FINANCE
230 Las Vegas Boulevard South | Suite 200 | Las Vegas, NV 89101
Phone: (702) 796-7080 | Fax: (702) 796-2975

September 7, 2022

Via e-mail

Monika E. Suarez
Western Alliance Business Trust, a Delaware statutory trust
601 W. 5th Street, Suite 100
Los Angeles, CA 90071
msuarez@westernalliancebank.com
Phone: (213) 362-5277

CLOSING MEMO

RE: $5,789,400 City of West Wendover, Nevada Consolidated Tax Revenue Interim Debenture (Downtown Development Phase I), Series 2022

CLOSING MEMO

The closing for the above-captioned Interim Debenture (the "Debenture") will occur on Thursday, September 15, 2022.

Prior to closing, the Debenture will be registered as directed by Western Alliance Business Trust, a Delaware statutory trust and a representative of Western Alliance Business Trust, a Delaware statutory trust (the "Purchaser") will be required to sign the Purchaser's Receipt. The Purchaser's Receipt will be included with the other closing certificates and the unqualified opinion of Sherman & Howard LLC in the transcript documenting the transaction.

The following summarizes the sources and uses of funds for the Debenture

Sources of Funds	
Maximum Par Amount	$ 5,789,400.00
Planned Issuer Equity Contributions	569,799.67
NV Gold Mines Grant	400,000.00
Other Unpledged Grants	325,000.00
Total Sources	**7,084,199.67**
Uses of Funds	
Total Underwriter's Discount	14,473.50
Costs of Issuance	83,526.50
Maximum Deposit to Project Construction Fund	6,986,199.67
Total Uses	**$ 7,084,199.67**

230 Las Vegas Boulevard South | Suite 200 | Las Vegas, NV 89101
Phone: (702) 796-7080 | Fax: (702) 796-2975

The City will make an initial draw under the Debenture of $230,761.85 of which $156,288.35 will be wired to the City by the Purchaser and deposited to the Project Fund and $74,473.50 will be wired to the City by the Purchaser and deposited to the Costs of Issuance Fund.

PURCHASER TO WIRE FUNDS TO THE CITY

Purchaser to wire $156,288.35 to the City for deposit to the Project Fund and to wire $74,473.50 to the City for deposit to the Costs of Issuance Fund, representing the first draw on the Debenture as follows:

$230,761.85 **City of West Wendover**
Bank: Nevada State Bank
ABA# 122400779
Account Name: City of West Wendover/General
Account Number: 0452003700

CITY TO WIRE FUNDS TO THE PURCHASER'S COUNSEL

City to wire funds to Stradling Yocca Carlson & Rauth for the Purchaser's counsel fee in the amount of **$10,000.00** to:

$10,000.00 **City National Bank**
18111 VonKarman Avenue, Suite 450, Irvine,
California 92612
Routing # 122-016066
Account # 023938545 (Stradling Yocca Carlson & Rauth)
(Client/Matter No. 200759-0044)

CITY TO WIRE FUNDS TO THE PURCHASER

The City to wire funds to Western Alliance Business Trust, a Delaware statutory trust in the amount of **$14,473.50** for the Purchaser's origination fee to:

$14,473.50 **Western Alliance Business Trust, a Delaware statutory trust**
ABA# 122105980
Account Number: 289061-1002 GL
REF: City of West Wendover, Nevada Downtown Development Phase 1 Project
Attn: Muni Department

Attached is a pro forma debt-service schedule for the Debenture.

If I can be of any further assistance, please do not hesitate to call.

Respectfully,

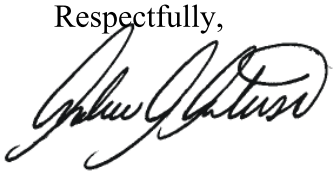

Andrew A. Artusa
Managing Director

cc: Chris Melville
Debra Sanchez
Kendra Follett
Scott Shaver
Melvin Moothen

$5,789,400

City of West Wendover, Nevada
Interim Debenture (Downtown Infastructure Project Phase I)
(Additionally Secured by Pledged Revenues) Series 2022

Aggregate Bond Balance

Date	Principal	Interest	Total P+I	Bond Balance	Fiscal Total
09/15/2022	-	-	-	-	-
02/01/2023	-	45,711.56	45,711.56	5,789,400.00	-
06/30/2023	-	-	-	5,789,400.00	45,711.56
07/01/2023	-	-	-	5,789,400.00	-
08/01/2023	-	132,287.79	132,287.79	5,789,400.00	-
02/01/2024	-	132,287.79	132,287.79	5,789,400.00	-
06/30/2024	-	-	-	5,789,400.00	264,575.58
07/01/2024	-	-	-	5,789,400.00	-
08/01/2024	5,789,400.00	132,287.79	5,921,687.79	-	-
06/30/2025	-	-	-	-	5,921,687.79
Total	**$5,789,400.00**	**$442,574.93**	**$6,231,974.93**	**-**	**-**

Par Amounts Of Selected Issues

2022 Downtown Project Interim Debenture	5,789,400.00
TOTAL	**5,789,400.00**

Western Alliance
Public & Nonprofit Finance

September 2, 2022

City of West Wendover, Nevada
1111 N. Gene L. Jones Way
West Wendover, Nevada 89883

Re: City of West Wendover, Nevada, Consolidated Tax Revenue Interim Debenture (Downtown Development Infrastructure Phase 1 Project), Series 2022 (the "Interim Debenture")

Ladies and Gentlemen:

Western Alliance Business Trust is pleased to provide the following commitment letter for the Interim Debenture which has received credit approval, pending final due diligence, receipt of a concurrence letter from the USDA, document review and normal "out provisions".

Borrower:	City of West Wendover, Nevada (the "Borrower" and "City")
Purchaser:	Western Alliance Business Trust, a Delaware statutory trust (the "Purchaser")
Permanent Lender:	United States Department of Agriculture ("USDA")
Permanent Financing:	USDA Direct Loan – Not to exceed $5,789,400 ("USDA Direct Loan")
Grants:	State of Nevada, Community Development Block Grant ($325,000) and Nevada Gold Mines ($400,000)
Borrower Cash Contribution:	$569,799.67
Commitment Amount:	Up to $5,789,400
Project:	Street improvements consisting of the extension of Pueblo Boulevard (a major arterial street) from the intersection of Wendover Blvd/Pueblo Boulevard north approximately 900 ft. along with related public infrastructure to serve the Phase 1 Downtown Development (the "Project").
Purpose:	The proceeds from the Interim Debenture will be used to: 1) pay the costs of the Project; and 2) pay costs of issuance associated with the Interim Debenture.
Final Maturity:	August 1, 2024.
Interest Payments:	Semi-annual interest payments on February 1 and August 1 commencing on February 1, 2023, through August 1, 2024. Interest on the Interim Debenture is to be computed on the basis of a year comprised of 360 days consisting of twelve (12) months of thirty (30) days each.
Principal Payments:	Interim Debenture due upon full prepayment or Final Maturity Date.

Interest Rate Pricing: The Interim Debenture will be funded at par and at a rate of interest based on the following formula:

79% of the sum of the 2-Year U.S. Treasury Actives Spot Rate plus 2.25% (tax-exempt fixed rate). The interest rate is **4.57%**. The interest rate will be held through Thursday September 15, 2022. See Exhibit A – Interest Rate Lock herein.

Reserve Requirement: Not required for the Interim Debenture.

Prepayment Provisions: The Interim Debenture may be prepaid, at the option of the Borrower in whole, or in part, on any date on or after August 1, 2023, at par plus accrued interest to the date of prepayment, without premium.

Security: The Interim Debenture will be secured by a lien on Pledged Revenues (as defined below) and the proceeds of the takeout financing.

Pledged Revenues: The Pledged Revenues are comprised of 15% of certain proceeds of liquor taxes, tobacco taxes, real property transfer taxes, basic governmental services tax and basic and supplemental sales taxes distributed to the City (the "Pledged Revenues").

Funds: In connection with the financing of the Interim Debenture, there shall be established with Western Alliance Bank the following bancontrol funds:

1) Project Fund; and

2) Costs of Issuance Fund.

The initial disbursement of funds will be made to the Borrower upon review and approval of such costs by the Purchaser. All subsequent disbursements of funds will be made to the Borrower upon review and approval of such costs by the USDA. The Purchaser will only disburse funds upon receipt of approval by the USDA.

Advances: The Interim Debenture will be disbursed to a Project Fund pursuant to a draw schedule fixed at closing and amounts on deposit in the Project Fund will be available to fund Project costs as set forth below.

Advances will be made to the Borrower from the Project Fund up to and including June 30, 2024 upon receipt of an advance request not later than the Business Day which is ten (10) Business Days immediately prior to the day of the requested advance and at least ten (10) Business Days immediately preceding the commitment termination date and further conditioned upon review and approval of the Project costs set forth in such advance request by the Purchaser and the USDA.

In the event of a federal shut down or other event causing a delay in USDA operations that prevents the USDA's timely approval of any draw request that is otherwise approved by the Purchaser, the Purchaser shall proceed with the advancement of such funds to the Trustee, with the general understanding that USDA has agreed to provide its approval of such draw request after operations recommence and to reimburse the Purchaser for any additional costs directly attributable to such delay.

Legal Opinion(s):

Opinion of Bond Counsel, among other things, as to:

1) treatment of interest payments under the Interim Debenture as exempt from federal income taxes;
2) the validity and enforceability of the Interim Debenture and the Pledged Revenues being duly and validly authorized pursuant to the law; and
3) the Interim Debenture is secured by a valid lien on Pledged Revenues and the proceeds of the takeout financing.

Bond Counsel shall deliver a supplemental opinion as to the Interim Debenture being exempt from registration pursuant to the Securities Act of 1933, as amended.

A certificate of the City Attorney will be delivered at closing in the form acceptable to the Purchaser and the Purchaser's Counsel.

Additional Obligations:

The City may issue additional obligations on parity with the Interim Debenture.

Take-Out Financing:

The City will take all actions, as contemplated under Section 13 of the ordinance, to obtain financing from the USDA or any other financing source to provide funds to refund all or a portion of the Interim Debenture prior to maturity and apply all such funds upon receipt to prepay the Interim Debenture.

Documentation:

Bond Counsel will prepare all of the legal documentation, which will contain customary affirmative and negative covenants as well as usual representations and warranties for like situated borrowers acceptable to the Purchaser. Events of Default shall include those that are deemed standard and customary for transactions of this nature all of which shall be subject to satisfactory review by the Purchaser.

Conditions Precedent:

Prior to the funding of the Interim Debenture, the following conditions precedent shall have occurred, all of which shall be in form and substance satisfactory to the Purchaser and the Purchaser's Counsel:

1) satisfactory review by the Purchaser's Counsel of any outstanding agreements entered into by the Borrower which may impact the security for the Interim Debenture or the obligations of the Borrower with respect to repayment the Interim Debenture;
2) any authorizing resolution of the Borrower as required for the execution, delivery and repayment of the Interim Debenture;
3) opinions as required by the Purchaser and the Purchaser's Counsel;
4) properly executed loan documents in form and substance satisfactory to the Purchaser and the Purchaser's counsel evidencing or supporting the repayment of the Interim Debenture;
5) all other conditions as contemplated under the USDA Letter of Conditions;
6) a projected draw schedule delivered prior to closing; and
7) additional conditions precedent that the Purchaser and the Purchaser's Counsel consider customary and reasonably appropriate for the funding of the Interim Debenture.

Loan Treatment:

The Original Purchaser will book the Interim Debenture as a loan, and, therefore, the Interim Debenture will be made under the following conditions:

1) the Interim Debenture shall not be registered or otherwise qualified for sale under the "Blue Sky" laws;
2) the Purchaser will satisfy the requirements of Municipal Securities Rulemaking Board Rule G-34(a)(i)(F), such that no CUSIP numbers will be obtained for the Interim Debenture (See "Assignment and Participation" herein);
3) no official statement or similar offering document has been prepared in connection with the private placement of the Interim Debenture;
4) the Interim Debenture will not settle through the DTC or any similar repository and will not be in book entry form; and
5) the Purchaser will sign a letter of representations in a form acceptable to Original Purchaser's Counsel and Bond Counsel.

Origination Fee: 25 basis points of the original principal amount of the Interim Debenture. No termination or other ongoing fees.

Expenses: All other out of pocket costs, including but not limited to Bond Counsel fee, Purchaser's origination fee, Purchaser's Counsel fees, with a cap of $10,000 (provided there is limited negotiation of the documentation), and other customary closing costs.

Bond Counsel: Sherman & Howard LLC / Reno, Nevada

Placement Agent: Zions Public Finance / Las Vegas, Nevada

Purchaser's Counsel: Stradling Yocca Carlson & Rauth, P.C. / Reno, Nevada

Pre-Closing Date: Tuesday September 13, 2022

Closing Date: Thursday September 15, 2022

No Fiduciary Relationship: Inasmuch as the Interim Debenture represents a negotiated transaction, the City understands, and will confirm that the Purchaser is not acting as a fiduciary to the City, but rather is acting solely in its capacity as an investment for its own account. The District will acknowledge and agree that:

1) the transaction contemplated herein is an arm's length commercial transaction between the City and the Purchaser and its affiliates;
2) in connection with such transaction, the Purchaser and its affiliates are acting solely as a principal and not as an advisor including, without limitation, a "Municipal Advisor" as such term is defined in Section 15B of the Securities and Exchange Act of 1934, as amended, and the related final rules (the "Municipal Advisor Rules");
3) the Purchaser and its affiliates are relying on the bank exemption in the Municipal Advisor Rules;
4) the Purchaser and its affiliates have not provided any advice or assumed any advisory or fiduciary responsibility in favor of the City with respect to the transaction contemplated hereby and the discussions, undertakings and procedures leading thereto;
5) the Purchaser and its affiliates have financial and other interests that differ from those of the City; and

6) the City has consulted with its own financial, legal, accounting, tax and other advisors, as applicable, to the extent it deemed appropriate.

Reporting Requirements:

The City shall provide the Purchaser with the following documentation and information within nine (9) months of the City's fiscal year end:

1) Audited financial statements of the City for the preceding fiscal year; and
2) Certification of the City that it is not aware of any default or Event of Default hereunder or in connection with the Interim Debenture.

The Borrower shall provide the Purchaser with its annual approved operating budget within one (1) month after its adoption.

The Purchaser shall receive notice of any material impact to the Borrower's financial position. The Borrower shall furnish at the Purchaser's request such additional information that the Purchaser may from time to time reasonably request.

Construction Monitoring:

The Borrower is required to provide monthly construction reports within 30 days of each monthly period. Construction reports to include the following due diligence items:

1) A summary of the Project status including pictures;
2) An update on Permitting, Design and Construction Progress;
3) A Project Budget including the approved budget, any change orders or budget reallocations, forecasted costs, amounts and percentages remaining to complete and use of contingency; and
4) A Project Schedule with milestone completion dates and variances.

Submitted on behalf of Western Alliance Bank and its affiliate, Western Alliance Business Trust.

Monika E. Suarez
Managing Director

CITY OF WEST WENDOVER, NEVADA

By: Debbie L Sanchez

Name: Debbie L Sanchez

Title: Chief Financial officer

Date: September 2, 2022

CITY OF WEST WENDOVER, NEVADA
CONSOLIDATED TAX REVENUE INTERIM DEBENTURE (DOWNTOWN DEVELOPMENT INFRASTRUCTURE PHASE 1 PROJECT), SERIES 2022

INTEREST RATE LOCK

INTEREST RATE LOCK CALCULATION AS OF THURSDAY SEPTEMBER 1, 2022.

Western Alliance Bank and its affiliate Western Alliance Business Trust (the "Lender") are pleased to provide to the City of West Wendover, NV (the "City") the following interest rate lock for the Consolidated Tax Revenue Interim Debenture (Downtown Development Infrastructure Phase 1 Project), Series 2022 (the "2022 Loan"), subject to the Purchaser's additional due diligence and receipt and approval of all relevant documentation, prior to closing.

NOT TO EXCEED AGGREGATE COMMITMENT:	$3,700,000.00
ESTIMATED FUNDING DATE:	Thursday, September 15, 2022
2 YEAR U.S. TREASURY ACTIVE SPOT RATE[1]	3.540%
BANK SPREAD	2.260%
TAXABLE INTEREST RATE[2]	5.80%
CONVERSION TO TAX-EXEMPT RATE ON SEPTEMBER 1, 2024	
TAXABLE INTEREST RATE[2]	5.80%
TAX-EXEMPT MULTIPLIER[3]	70%
TAX-EXEMPT INTEREST RATE[3]	4.06%

(1) Bloomberg Finance L.P. - 2 year U.S. Treasury Active Spot Rate as of Thursday September 1, 2022, rounded to the nearest one hundredth percentage. See below for Screen Shot.

(2) Based on a federal corporate tax rate of 21%

(3) The interest rate is rounded to the nearest one hundredth and will expire if the 2022 Loan are not funded by Thursday September 15, 2022.

BLOOMBERG FINANCE L.P. SCREEN SHOT OF USD 2 YEAR TENOR AS OF THURSDAY SEPTEMBER 1, 2022.



CITY OF WEST WENDOVER
FIVE YEAR CAPITAL IMPROVEMENT PROJECTS PLAN
FISCAL 2023-2024 thru 2027-2028
By Priority

√ Denotes Project process, engineering design and/or construction underway.

2023-2024

1. **√ CITY DOWNTOWN INFRASTRUCTURE PHASE 1 – COST ($7,084,199).**
With the City proceeding with planned development initiatives on the City Center/Downtown property Phase 1 infrastructure needs to be completed. This infrastructure will include an extension to Pueblo Boulevard to the north of approximately 900 feet in a complete street design as well as related utility infrastructure which will service the Phase 1 area that will contain approximately 60 acres of land for commercial development.

Progress Report: Project under construction, completion scheduled for September 2023. Funding by USDA loan, Nevada CDBG Grant, U.S. EDA Grant, NGM Grant and General Fund ARP Allocation. FY2023-2024

2. **√ FIRE STATION FACILITY – COST ($14,773,822).**
The current Fire Station is located on private land, which the City has leased on a yearly basis. The existing facility is limited in size and capability given its initial size and related construction and the property owner has chosen not to provide future lease of the facility. The community has more than quadrupled in size since the original facility was built and now the long-term needs of the community are not being met. The City has a site selected and partially developed to accommodate the new fire station facility, located adjacent to the City Hall on N. Gene L. Jones Way. The project is currently completing design and scheduled for construction late fall of 2023 under a Design/Build Contract with CORE Construction.

Progress Report: Design nearing completion, construction scheduled for late fall 2023 with expected one year construction. This project to be funded through USDA loan (obligated) and General Fund ARP Allocation and Other Grants/Loans FY 2023-2024

3. **√ INTEROPERABILITY, POLICE, POLICE DISPATCH AND EMERGENCY SERVICES TOWER/MOBILE DATA – COST *($426,000)***
The City of West Wendover continues its progress with regard to upgrades to the City's interoperability for Public Safety which includes adding an additional radio tower at the Public Works Facility to enhance coverage of the eastern end of the community along with providing increased signal penetration of commercial buildings for radio traffic. This project also includes upgrades to the Police Dispatch System for capability to integrate, use and transmit GIS, law enforcement and emergency services information from Dispatch to officers and personnel on the street via wireless networking and related equipment in vehicles.

Progress Report: Tower site location chosen, FAA permit in process for location. GIS base mapping complete, dispatch system has base capabilities for networking. Funding to be provided by General Fund and DOJ Technology Grant currently in place. Construction completion spring 2024. FY 2023-2024

4. **√ WEST WENDOVER CLINIC DIGITAL X RAY UPGRADE – COST ($320,000).**
This project is to complete an upgrade to the West Wendover Clinic Digital X-ray machine and related equipment. The project is being funded through a grant obtained through the Health Resources and Services Administration (HRSA).

Progress Report: X-ray acquisition process initiated. Completion of project by January 2024. Funding through HRSA Grant. FY 2023-2024

5. **√ ACQUISITION/CONVEYANCE OF AIR FORCE PROPERTY PHASE 1 (PORT OF WEST WENDOVER) INCLUDING ANNEXATION – COST ($50,000).**
The City of West Wendover has adopted the development plan for the first 3,000 of 6,000+ acres of U.S.A.F. Property to be developed in part as the Port of West Wendover. In September 2014 the Air Force submitted their letter of relinquishment for Phase 1 which contains 6,000 acres to the Bureau of Land Management (BLM). The BLM is now completing the necessary environmental assessment and related reports in conjunction and coordination with work by the U.S.A.F. regarding an identified CERCLA site. Once this work is completed the process of conveyance will proceed providing the properties to the city. Though the conveyance itself is at no cost, there is anticipation of some costs administratively with regard to completing the process and annexing the property into the city limits.

Progress Report: U.S. Public Law 107-314 signed into law on December 2, 2002 authorizes the conveyance of approximately 15,000 acres of property to the City of West Wendover, Nevada and Tooele County, Utah. The property use has been reassessed and the conveyance will now contain approximately 6,000 acres. BLM has completed the EA and is preparing to convey just over 4,000 acres under stipulation with the City, with the remaining approximately 2,000 acres now in an appeal process with the Board of Land Appeals under a filing by the City due to removal of such property from conveyance consideration by the BLM. BLM estimates conveyance should occur first half of calendar 2024. Funding by Federal Government, Tooele County, Utah and General Fund. FY 2023-2024

6. **√ INFRASTRUCTURE NORTH INTERSTATE 80 EXIT #410, PHASE 2, LEPPY HILLS BLVD, N. FLORENCE WAY EXTENSION AND OTHER UTILITIES – COST ($4,200,000).**
The City of West Wendover has planned development initiatives, which include infrastructure (arterial, collector streets and utility services) on the north side of Exit #410 at Interstate 80. This area includes access to public federal lands including the Leppy Hills Trails complex in addition to commercial development areas and continued access to the NDOT maintenance facility. The project fulfills obligations of the City under the Memorandum of Understanding executed in 2009 between the City of West Wendover, Nevada Department of Transportation and the Federal Highway Administration for access at Interstate 80, Exit 410. The infrastructure would establish necessary public improvements for this area. The project includes pedestrian accesses related to Exit 410 which may be phased.

Progress Report: Funding sources Private Funding via current developments. FY 2023-2024

7. **√ LOGISTICS DRIVE EXTENSION PROJECT – COST ($805,000).**
This project is to complete Logistics Drive in the Industrial Park. The extension is approximately 800 feet in length and includes curb, gutter, sidewalk and necessary street lighting. Other main utilities are currently in place. City Council has approved this project to proceed.

Progress Report: Project funding through the General Fund. FY 2023-2024

2024-2025

8. **√ ACQUIRE AERIAL PLATFORM CLASS 1 ENGINE 2000 GPM – COST ($1,000,000).**
At this time, with our existing equipment, it is difficult to reach 30-foot buildings or higher. Evacuation from such roofs of buildings may be necessary in the future and this equipment would facilitate such evacuations. An added benefit to this type of unit is a substantial decrease in insurance costs throughout the community.

Progress Report: This project is to be funded through a medium-term loan and/or grant through USDA Rural Development or Other. FY 2024-2025

9. **DOWNTOWN DEVELOPMENT INFRASTRUCTURE PHASE 2 – COST ($4,122,012).**
This project will complete the public improvements that were not able to be completed in Phase 1 due to cost. Phase 2 includes the utility/restroom building as well as the recreation splash pad associated with the Victory Plaza in the new downtown.

Progress Report: Engineering estimate complete based upon the Phase 1 pricing. Project funding application submittal made through Congressional Direct Funding FY24. Project funding through HUD Grant (Congressional) and General Fund. FY 2024-2025

10. **REUSE LINE REPLACEMENT FROM WASTE WATER FACILITY TO TOANA VISTA GOLF COURSE STORAGE FACILITY – COST ($4,181,292).**
This project includes replacement of approximately 14,416 feet of existing reclaimed (reuse) water pipeline of various diameters to new 10" C-900 DR-18 PVC pipe. The project will include several combination air valve stations and other appurtenances to allow transfer or reclaimed water produced by the wastewater treatment facility to the Toana Vista Golf Course for use as irrigation water for the summer irrigation season.

Progress Report: Preliminary Engineering Report has been completed. Project has been submitted to SRF for Funding. Funding through SRF Loan/Grant. FY 2024-2025

11. **WASTE WATER TREATMENT FACILITY COMPRESSOR REPLACEMENT – COST ($114,000).**
This project will include replacement of the existing air compressor which provide process air for the treatment facility.

Progress Report: Engineering estimate complete. Project funding submittal complete to SRF. Project funding through Sewer Fund and SRF Loan/Grant. FY 2024-2025

12. **WASTE WATER TREATMENT FACILITY MBR FILTER REPLACEMENT – COST ($1,717,000).**
The existing MBR filters have reached their useful design life and are showing signs of deterioration and wear. An ever-increasing amount of effort and cost is being expended keeping these filters functioning. This project will replace all the existing MBR filters with new filters of the same manufacturer to bring the plant back to full capacity and efficiency.

Progress Report: Engineering estimate complete. Project funding submittal complete to SRF and Congressional Direct Spending application. Project funding through Sewer Fund and SRF Loan/Grant and NDEP through Congressional program. FY 2024-2025

2025-2026

13. **√ WEST WENDOVER COMMUNITY AND RECREATION CENTER – COST ($12,000,000).**
The city recently completed a 5-year Comprehensive Economic Development Strategy (CEDS) as part of the State of Nevada CEDS process. Through the process, the development of a Community and Recreation Center was one of the top 3 goals established by the CEDS committee. The project would include a Senior Center, Library (to be operated by the Elko County Library System), Food Bank as well as various indoor recreational amenities. The facility would be owned, developed and financed under the provisions of NRS 277.0705 wherein a cooperative agreement between the City of West Wendover and the West Wendover Recreation District would be established.

Progress Report: A combination of funding is being sought for the project. The City and the West Wendover Recreation District have adopted a previous Joint Resolution (No. 2020-01) which sets forth the parameters of entering into a Cooperative Agreement pursuant to NRS 277.0705. Funding by USDA, City and WWRD and potential private funding. FY 2025-2026

14. **PUEBLO BOULEVARD/ N. TIBBETS BOULEVARD STORM DRAIN PROJECT PHASE 4 – COST ($110,000).** During calendar 2014 and 2015 the city experienced several severe flooding events which required additional storm drainage improvements, modification and evaluation. An evaluation of the impacts and solutions based on these events has been completed by the City Engineer. Based on the findings and approval of Council, the city completed the Storm Drain Project Phase 1 and 2 in 2017 and in 20120 Phase 3 which was a storm water detention basin along Pueblo Boulevard, east of Alpine Street. Phase 4 is the construction of additional storm water detention and sedimentary basins along the west side of N. Tibbets Boulevard that feed into the main system at the intersection of N. Tibbets and Pueblo Boulevard.

Progress Report: Initial design complete for Phase 4 and coordination with private property holdings in process. Funding by City Capital Projects Fund and possible private resources. FY2025-2026

15. **3 MILE RESERVOIR REHABILITATION – COST ($261,400).**
The reservoir is a 1.5 MG potable water storage facility which receives water from the city owned sources located within the Goshute valley approximately 25 miles west of West Wendover, Nevada. In 2010 the synthetic liner in the facility was replaced and is now showing signs of deterioration and leakage along with visual degradation of concrete within the reservoir. The proposed project will address these issues wherein the existing liner will be removed and the concrete structure will be repaired. These repairs will include grinding and patching natural cracks, repairing chipped and spalled concrete and general reconditioning of the concrete as required. A deteriorated concrete column which supports the aluminum cover will also be demolished and replaced. Following this work, a new synthetic liner will be installed to complete the project.

Progress Report: Estimates completed. This project is intended to be funded through the Johnson Springs Enterprise Fund and NDEP/SRF Loan/Grant or Other Grant. FY 2025-2026

16. **RECLAIMED WATER TANK RECOAT – COST ($82,974)**
This project includes the cleaning and restoration of the interior and exterior surfaces of the reclaimed water storage tank. The tank will be drained, cleaned and blasted to a white metal finish and recoated using a system compatible with reuse water. During the cleaning and prep phase of the project, the tank structure will be evaluated for corrosion and deterioration and repaired as needed.

Progress Report: Engineering estimate complete. Project funding submittal complete to SRF. Project funding through Water Fund and SRF Loan/Grant. FY 2025-2026

17. **WASTE WATER TREATMENT FACILITY BASIN REPAIR – COST ($378,300).**
This project will address cracks and leaks that have become problematic on the basin at the Waste-Water Treatment Plant. Project will consist of surface preparation and application of waterproofing treatment to the interior walls of the basin.

Progress Report: Engineering estimate complete. Project funding submittal complete to SRF. Project funding through Sewer Fund and SRF Loan/Grant. FY 2025-2026

18. **ASBESTOS LINE REPLACEMENT WENDOVER BOULEVARD – COST ($1,004,968).**
This project replaces approximately 2,020 feet of existing asbestos cement (A/C) water pipe along Wendover Boulevard beginning at the intersection of SR93A and extending east towards the state line.

Progress Report: Engineering estimate complete. Project funding submittal complete to SRF. Project funding through Water Fund and SRF Loan/Grant. FY 2025-2026

19. **WENDOVER REGIONAL MULTI MODAL ENHANCEMENT PROJECT PHASE 1A (N. GENE L. JONES WAY TO RED GARTER ST) – COST ($3,858,278).**
As traffic frequency and load increases with the growth of the community, areas of Wendover Boulevard will require rehabilitation in order to be able to support vehicle traffic, incorporate safe streets programs and provide for multi-modal enhancements. Phase 1A includes street widening and center islands, bicycle lanes, increased pedestrian access and lighting.

Progress Report: Estimates completed and conceptual programming completed. This project is intended to be funded through General Fund and/or RTC Funds combined with, NDOT and USDOT Funding Programs in addition to Private Funding. FY 2025-2026

20. **WENDOVER REGIONAL MULTI MODAL ENHANCEMENT PROJECT PHASE 1B (RED GARTER ST TO US93A) – COST ($11,444,835).**
As traffic frequency and load increases with the growth of the community, areas of Wendover Boulevard will require rehabilitation in order to be able to support vehicle traffic, incorporate safe streets programs and provide for multi-modal enhancements. Phase 1B includes street widening and center islands, bicycle lanes, increased pedestrian access, lighting and street signalization (Exit 410).

Progress Report: Estimate complete, conceptual programming completed. This project is intended to be funded through General Fund and/or RTC Funds combined with, NDOT and USDOT Funding Programs in addition to Private Funding. FY 2025-2026

21. WEST WENDOVER STREET REHAB PROJECTS (PHASE 3) – COST ($360,000).

The Street Rehab Projects include the rehabilitation of several major street segments in the community which require additional investments outside of the normal maintenance cycle. The initial selected areas include Wendover Boulevard, Mesa Street and other collector and arterial street segments within the city.

Progress Report: Funding by City General Fund. FY2025-2026

22. WATER LINE EXTENSION MESA TO INDUSTRIAL WAY INCLUDING UPRR CROSSING, SECTION 16 & 17 – COST ($1,521,300).

This project consists of approximately 7,250 feet of 8" water line to be extended from Florence Way at the intersection of Mesa Street cross-country within proposed street rights-of-way to Industrial Way. The project also includes an underground crossing with the UPRR near the Mesa Street intersection. The project will boost pressures and fire flows to this area of the system and will provide a looped connection with redundant delivery methods to the industrial sector of the city.

Progress Report: Line interconnection completed as part of Florence Way Phase 2 in 2016. Engineering design completed, permit with UPRR ready for submittal. Project funding through Water Fund and SRF Loan/Grant. FY 2025-2026

23. 3 MILE WATER LOOP – COST ($3,968,210).

This project includes the installation of approximately 10,000 feet of 10" PVC water main along the eastern boundary of the city. Several pressure reducing stations, combination air valve stations and other pipeline appurtenances will be installed with the project to provide redundant flow paths and fire capacity to the central and lower areas of the city.

Progress Report: Engineering estimate complete. Project funding submittal complete to SRF. Project funding through Water Fund and SRF Loan/Grant. FY 2025-2026

24. JOHNSON SPRINGS TRANSMISSION SYSTEM, PRESTRESSED CONCRETE CYLINDER PIPE (PCCP) PIPELINE REPLACEMENT PROJECT – COST ($3,880,300).

The PCCP Replacement Project replaces 5,400 feet of 24-inch pre-stressed concrete cylinder pipe installed in the late 1970's as part of the potable water transmission pipeline that delivers drinking water from the Goshute Valley to the Cities of West Wendover, Nevada and Wendover, Utah. The pipeline has reached its useful service life as evidenced by recent leaks and assessment of the condition of the pipe where it has been exposed for repair on two different occasions. PCCP installations in the U.S. have proven to be problematic due to a shorter than expected service life and the fact that this pipe is extremely difficult to repair. Steel wire pre-stressing failures propagate rapidly, leading to subsequent failure of the thin-shell steel cylinder, resulting in leaks and eventual sectional failure. Leaks and the high probability of sectional failure create public health concerns due to potential exposure of drinking water to contamination and significant, long-term disruption of the community water supply. In addition, this portion of the transmission pipeline crosses the Union Pacific Railroad and any failure that impacted rail operations would subject the cities to significant financial risk.

Progress Report: Preliminary Engineering Report completed and pre-application has been filed with SRF. Funding would be SRF Loan/Grant. FY 2025-2026

2026-2027

25. URGENT CARE/MEDICAL FACILTY – PHASE 1 – TOTAL COST ($3,500,000).

The city recently completed a 5-year Comprehensive Economic Development Strategy (CEDS) as part of the State of Nevada CEDS process. Through the process, an adequate urgent care/medical facility was one of the top 3 goals established by the CEDS committee. Though a complicated and difficult project, the city plans for an initial phase 1 facility that would provide a basis to increase medical services beyond existing services with the ability to expand the facility as need and growth occurs.

Progress Report: The City has a site selected and partially developed to accommodate the new facility, located adjacent and south of the City Hall on N. Gene L. Jones Way. The site also has additional access from the City Downtown area which is being developed adjacent and west of the site. Funding through USDA Loan, CDBG Grant and private sources. FY 2026-2027

26. **RED GARTER STREET STORM DRAIN BASIN PROJECT – COST ($125,000).** As part of the city's continued efforts to plan for storm water detention and sedimentary basins, this project would construct a storm water detention and sedimentary basin on the west side of Red Garter Street on the public property under control of the City, to which the current storm drainage channel located along the west side of Lee's Discount Liquor Store would be routed into. Additionally Red Garter Street drainage would also be routed into this basin and future storm water drainage from the public property between Red Garter Street and Wells Avenue, as it is developed.

    Progress Report: Initial concept considered and location determined, ready for design and construction. Funding by City Capital Projects Fund. FY2026-2027

27. **√ WEST WENDOVER MULTI MODAL ENCHANCEMENT PHASE 1 – RAIL PASSENGER STATION – AMTRAK – COST ($12,089,658).**
    Phase 1 includes the construction of a passenger train station, related platform and ancillary facilities on Florence Way approximately ½ mile from the West Wendover Welcome Center. The facility would be constructed per design and service requirements of Amtrak and Union Pacific Railroad (the host railroad). The City and Amtrak executed a MOU on February 11, 2015 for the related facility design, construction and required service. The City has received support for the project from the State and Congressional Delegation as well as Amtrak and Union Pacific Railroad among many other agencies and businesses. The project has considerable components related to Economic Development/ Job Creation per the BCA completed for USDOT.

    Progress Report: Previous MOU executed with Amtrak, awaiting new MOU from Amtrak. Host railroad has provided initial approval, 10% design has been completed per UPRR requirements. City pursuing grant funding and other sources through the State to proceed with facility design and construction. Project funding through General Fund, USDOT Funding, CDBG funding and potential private funds. FY 2026-2027

28. **PEPPERMILL DEEP SEWERLINE REPLACEMENT – COST ($430,480).**
    This project consists of replacement of a section of sewer line installed cross-county through Montego Bay/Rainbow Casino property that has, over the years been filled resulting in a sewer line that is excessively deep and nearly impossible to access and maintain.

    Progress Report: Estimates completed. This project is intended to be funded through the Water Enterprise Fund and NDEP/SRF Loan/Grant. FY 2026-2027

29. **WEST WENDOVER MULTI MODAL ENHANCEMENT PHASE 2 – WELCOME CENTER MULTI MODAL TRANSPORTATION HUB – COST ($1,700,000).**
    Phase 2 includes the modification of the Nevada – West Wendover Welcome Center now owned by the City, located at the intersection of Wendover Boulevard and Florence Way. The facility would be modified to include capabilities to function as a multi-modal transportation hub including bus, rail and related services in addition to continuing to serve a role as a tourism center.

    Progress Report: Welcome Center facility acquisition completed. Conceptual design layout complete to include new bus terminal area and related parking. Project funding through RTC Funds, USDOT Funding, CDBG Funding and potential private funding. FY 2026-2027

30. **SIDEWALK REHABILITATION PROJECT VARIOUS LOCATIONS – COST ($225,000).**
    As infrastructure continues to age, there are areas of pedestrian sidewalk in which normal maintenance is no longer adequate. As such, several areas in the community will be identified where rehabilitation work will take place to properly address safety and access issues.

Progress Report: Identification of specified areas and related costs estimates are underway. This project to be funded through General Fund, RTC and possible CDBG Grant. FY 2026-2027

31. CONSTRUCT ANIMAL CARE FACILITY – COST ($3,618,000).

The current Animal Shelter facility does not meet the long-term requirements for our growing community in relation to animal services including veterinarian, boarding, and other pet services. The project will include construction of a new facility on City property, which potentially could include additional public/private partnerships in relation to operation of the facility. Current WendRover Pet Group has joined with the City in exploring new avenues for such a facility.

Progress Report: Study completed. Project funded through Ad Valorem Capital Projects Fund and General Fund and possible CDBG Grant in addition to Private Funding. FY 2026-2027

32. PUBLIC PARK IMPROVEMENTS, 3-ACRE TIBBETS BOULEVARD – COST ($600,000).

The City has ownership of 3 acres of property on the west end of Tibbets Boulevard near several residential areas. The parcel is intended for public park development. As of today, the City has only one community park (Robert F. Scobie Park) which is located in the eastern portion of the community near U.S. Highway 93A along Wendover Boulevard. Scobie Park is located two miles from the densest area of residential development in the community and nearly three miles from the most western residential developments in the community located on the west end of Tibbets Boulevard. Thus, the project improves park access.

Progress Report: The City has acquired the identified 3 acres for public park development as part of the City's planning efforts. This project to be funded through General Fund, possible CDBG Grant, participation by West Wendover Recreation District and Private Developers. FY 2026-2027

33. REHABILITATION OF WENDOVER BOULEVARD (PUEBLO BOULEVARD TO OLA GRADE INTERCHANGE PHASE 1) – COST ($1,490,000).

As traffic frequency and load increases with the growth of the community, Wendover Boulevard will require rehabilitation in order to be able to support vehicle traffic without complete degradation of the street substructure. The project would consist of appropriate rehabilitation work including roto-milling, new pavement as well as appropriate striping along 3,600 lineal feet of Wendover Boulevard.

Progress Report: Preliminary estimation completed. This project to be funded through General Fund and RTC Funds. FY 2026-2027

34. WASTE WATER SOLAR ARRAY – COST ($530,000).

The City's new Waste Water Facility when built included the ability to accommodate the introduction of supplemental electrical power provided via solar array. This would be a similar project to what has been accomplished at the West Wendover City Hall.

Progress Report: Waste Water Upgrade Phase 2 completed. Funding for the project through Department of Energy (DOE) Grant, Sewer Fund. FY 2026-2027

2027-2028

35. NATURAL GAS INFRASTRUCTURE AND SERVICE – COST ($13,948,000)

The city recently completed a 5-year Comprehensive Economic Development Strategy (CEDS) as part of the State of Nevada CEDS process. Through the process, it was clear that the community needs to have access to natural gas to reach the community's full development potential either through a transmission pipeline or via compressed natural gas (CNG). This item was in the top 3 goals established by the CEDS committee. In order for the community to have stability with regard to heating fuel, natural gas is necessary to replace the more expensive use and less reliable transport of Liquefied Petroleum (LP). This would lower utility costs and increase business development.

Progress Report: The City has completed the CEDS process outlining the goal of natural gas. The city continues to work with the local private utility Wendover Gas as well as Pilot Pipeline in addition to other third-party users such as Long Canyon Mine, to find a suitable solution which includes a transmission pipeline connecting at the Ruby Pipeline just north of Montello, NV. A Feasibility Study has been

completed for such project under a grant from USDA Rural Development. Funding through private sources and possibly USDA Loan. FY 2027-2028

36. WATER METER AND METER YOKE REPLACEMENT – COST ($2,671,000).
This project will replace approximately 181 existing commercial water meters with modern meters with remote reading capabilities and 922 residential water meter yokes.

Progress Report: Estimates completed. This project is intended to be funded through the Water Enterprise Fund and SRF Loan/Grant. FY 2027-2028

37. PUEBLO BOULEVARD WATER LINE EXTENSION – COST ($1,325,810).
The Pueblo Boulevard Water Line Extension includes installation of approximately 7,550 feet of 8" C-900 DR-18 PVC water pipe along with Pueblo Boulevard right-of-way connection to the existing water main located in the roadway directly north of Toana Vista Golf Course and running west before turning south to tie into the existing dead-end water main located in Tibbets Lane. This extension will provide a looped connection for the terminus end of the West Wendover water system and will alleviate low-pressure deficiencies experienced in the portion of the system. A secondary benefit of this extension will be to bolster fire flow capacity in this area.

Progress Report: Estimates completed. This project is intended to be funded through the Water Enterprise Fund and NDEP/SRF Loan/Grant. FY 2027-2028

38. CITY PUBLIC FACILITIES (PHASE 2 MEDICAL, EDUCATIONAL, AMPHITHEATER, PARKS, ENTERTAINMENT, TOURISM AND COMMERCIAL RELATED (MULTIPLE PHASES) – TOTAL COST ($22,500,000).
The City is proceeding with planned development initiatives, including infrastructure (collector, arterial streets and utility services) and facilities as part of the City's Downtown Plan, Tourism Development as well as Community Service Needs. This area would include additional public facilities and attractions meeting the needs of the growing community and business district. The property is part of the "City Center/Downtown Area" containing approximately 175 acres along Wendover Boulevard which was acquired through an R&PP Lease beginning in 2005 and will be a pertinent part acquired through patent beginning in 2020.

Progress Report: The City has completed studies for the provisions of future public infrastructure and facility projects that may be located in the City Center/Downtown Area. Construction of the City Hall is complete along with the City Center Monument and the Victory Highway Historic Interpretive Walking Trail. A community needs survey and related planning and preliminary architectural work has been completed on a Community Center that would contain: Library, senior center, youth facilities and public meeting spaces. This work was funded through a private grant. Additional expansion of medical facilities is anticipated as growth/need occurs along with other public facilities, which may in part be funded through private sources in addition to several bonding sources and/or grant/loan funds such as USDA-RD. FY 2027-2028

39. WENDOVER REGIONAL MULTI MODAL ENHANCEMENT PROJECT PHASE 2 (AIRPORT TERMINAL IMPROVEMENTS) and REGIONAL AIR SERVICE DEVELOPMENT – COST ($2,650,000).
With nearly 60,000 annual passenger enplanements, the current airport terminal is in need of intermodal improvements including vehicle parking, bus lanes, and main entrance improvements. Phase 2 will improve efficiency, increase access and provide intermodal capabilities.

Additionally, this project contains associated funding with regard to efforts currently underway to establish regional air service (9 to 15 passengers) with a primary route being Wendover to Elko to Reno and return. Additional routes to Las Vegas area have also been considered. The City is currently working with the Governor's Office on Economic Development (GOED) and Northeast Nevada Development Authority on assessing ways to institute and fund the air service component possible through direct legislative funding by the State.

Progress Report: Estimates completed, conceptual programming completed, funding applications considered. This project is intended to be funded through Wendover Airport/Tooele County, Utah, FAA and USDOT Funding Programs in addition to State of Nevada GOED and Private Funding. FY 2027-2028

40. WENDOVER REGIONAL MULTI MODAL ENHANCEMENT PROJECT PHASE 3 (NEVADA/UTAH STATE LINE) – COST ($1,400,000).

Phase 3 improvements provide for pedestrian and multi modal enhancements to Wendover Boulevard at the historic boundary between Utah/Nevada located on Wendover Boulevard. Extensive pedestrian flow occurs in this area between two major commercial facilities. The improvements will increase safety by reducing pedestrian and vehicular conflicts in addition to providing multi modal transit options. The project includes street improvements, pedestrian safe-island and historical marker, bicycle lanes, lighting, and other multi-modal transit improvements.

Progress Report: Estimates complete, conceptual programming completed. This project is intended to be funded through General Fund and/or RTC Funds, NDOT, USDOT, Wendover, Utah Funding Programs in addition to Private Funding. FY 2027-2028

41. WENDOVER REGIONAL MULTI MODAL ENHANCEMENT PROJECT PHASE 4 (FIRST STREET, MORIAH AVENUE, SOUTH TO AIRPORT TERMINAL –WENDOVER, UTAH) – COST ($2,800,000).

As traffic frequency and load increases with the growth of the community, streets which connect to Wendover Boulevard will require rehabilitation in order to be able to support vehicle traffic, incorporate safe streets programs and provide for multi-modal enhancements. Phase 4 includes a complete streets project along First Street from Moriah Avenue south to the Wendover Airport.

Progress Report: Estimates complete, conceptual programming completed. This project is intended to be funded through USDOT, Wendover, Utah and Wendover Airport/Tooele County Funding Programs in addition to Private Funding. FY 2027-2028

42. WENDOVER REGIONAL MULTI MODAL ENHANCEMENT PROJECT PHASE 5 (FIRST STREET, MORIAH AVENUE, NORTH TO WENDOVER BOUELVARD – WENDOVER, UTAH) – COST ($2,600,000).

As traffic frequency and load increases with the growth of the community, streets which connect to Wendover Boulevard will require rehabilitation in order to be able to support vehicle traffic, incorporate safe streets programs and provide for multi-modal enhancements. Phase 5 includes street widening and center islands, bicycle lanes, increased pedestrian access, lighting, and other multi-modal transit improvements along First Street from Moriah Avenue north to Wendover Boulevard in Wendover, Utah.

Progress Report: Estimates complete, conceptual programming completed. This project is intended to be funded through USDOT, Wendover, Utah and Wendover Airport/Tooele County Funding Programs in addition to Private Funding. FY 2027-2028

43. WENDOVER REGIONAL MULTI MODAL ENHANCEMENT PROJECT PHASE 6 (US93A EAST TO NEVADA/UTAH BORDER) – COST ($4,950,000).

As traffic frequency and load increased with the growth of the community, areas of Wendover Boulevard will require rehabilitation in order to be able to support vehicle traffic, incorporate safe streets programs and provide for multi-modal enhancements. Phase 6 includes street widening and center islands, bicycle lanes, increased pedestrian access, lighting, street intersection signalization (US93A/Wendover Blvd) and other multi-modal transit improvements connecting the Phase 1 and Phase 3 project limits.

Progress Report: Estimates complete, conceptual programming completed. This project is intended to be funded through General Fund and/or RTC Funds, NDOT and USDOT Funding Programs in addition to Private Funding. FY 2027-2028

44. LEPPY HILLS TRAILS ADDITION (EXPANSION OF EXISTING TRAIL SYSTEM) – COST ($950,000).

The City has completed the construction of the initial Leppy Hills Trail System containing three loops of hardpack trail for public non-motorized recreation use. These three loops contain approximately 8 miles of trail. Through the existing Recreation and Bicycle Plan expansion of the trail would be considered in the future. Current facility receives great use by the public which lends to the potential of continuing with expanding the trail system with an additional 5 mile of hardpack trail.

Progress Report: Initial planning completed. The project would be funded through the General Fund and a Grant from Nevada State Lands. FY 2027-2028

45. REHABILITATION OF WENDOVER BOULEVARD (PUEBLO BOULEVARD TO OLA GRADE INTERCHANGE PHASE 2) – COST ($1,450,000).

As traffic frequency and load increases with the growth of the community, Wendover Boulevard will require rehabilitation in order to be able to support vehicle traffic without complete degradation of the street substructure. The project in Phase 2 would consist of appropriate rehabilitation work including roto-milling, new pavement as well as appropriate striping along 3,800 lineal feet of Wendover Boulevard.

Progress Report: Preliminary estimation completed. This project to be funded through General Fund and RTC Funds. FY 2027-2028

46. REHABILITATION OF WENDOVER BOULEVARD (PUEBLO BOULEVARD TO OLA GRADE INTERCHANGE PHASE 3) – COST ($1,300,000).

As traffic frequency and load increases with the growth of the community, Wendover Boulevard will require rehabilitation in order to be able to support vehicle traffic without complete degradation of the street substructure. The project, Phase 3, would consist of appropriate rehabilitation work including roto-milling, new pavement as well as appropriate striping along 3,600 lineal feet of Wendover Boulevard.

Progress Report: Preliminary estimation completed. This project to be funded through General Fund and RTC Funds. FY 2027-2028

47. INFRASTRUCTURE PUEBLO BOULEVARD/TIBBETS BOULEVARD EXTENSIONS – COST ($8,900,000).

The City of West Wendover is proceeding with planned development initiatives, which include infrastructure (collector/arterial streets and utility services) for the extension of Tibbets Boulevard and Pueblo Boulevard. This area includes commercial development such as hotel/resorts, general retail and residential development in addition to ancillary commercial services. The infrastructure would establish necessary public improvements for this area including the linking of residential development in the southern portion of the city to those in the north.

Progress Report: The City has completed the studies necessary to identify the infrastructure required for future development in the western portions of the City Limits. Funding sources would include several bonding sources as well as private partnerships. FY 2027-2028

48. PORT OF WEST WENDOVER, PHASE 1 INFRASTRUCTURE – COST ($15,800,000).

The Port of West Wendover is currently being created through the acquisition of over 6,000 acres of property currently under the control of the United States Air Force. This project will include a significant first phase of infrastructure needed for development of the properties located within the port, including linking the port properties via a main taxiway (through the fence operation) to the airside facilities of Wendover Airport. This access has been identified and included in the 2020 Wendover Airport Master Plan. The properties would include: Commercial, Manufacturing, Foreign Trade Zone, Bonded Warehousing and other similar developments that would benefit from being located in Nevada and taking advantage of Nevada's tax and fee structures, while using access via Wendover Airport airside facilities. Such arrangement would benefit both the City of West Wendover and Wendover Airport/Tooele County, Utah. The master plan for the port was completed in 2001.

Progress Report: Under Study for funding by City Bond, Developers, RTC, NDOT, FAA and others. FY 2027-2028

49. FLORENCE WAY UPGRADE AND RELOCATION (SOUTH FLORENCE WAY) PHASE 4 (LAGUNA DRIVE WEST 3,000 FEET) – COST ($2,050,000).

This project consists of constructing an additional segment to Florence Way Phase 3, paralleling the Union Pacific Railroad (UPRR). Completion would be four travel lanes, two bike lanes, appropriate curb, gutter and sidewalk and a protective fence along recreational properties; currently non-existent.

Progress Report: Under Study for City Bond, RTC Funding. FY 2027-2028

50. ANNEXATION OF BLM PROPERTY – COST ($525,000)

The City of West Wendover has adopted the plans for the enlargement of the City's boundaries. The new City boundaries will incorporate current federal lands into the City boundary. The new City Limits would incorporate some 96,000 acres of property. The property is located south, west and north of the existing city limits.

Progress Report: City Council approved annexation plan 2000. Project funded through the General Fund. FY 2027-2028

<End of Document>

Nevada State Infrastructure Bank

Financing Application

Nevada State Infrastructure Bank Overview:

The Nevada State Infrastructure Bank was established to provide low-cost financing to Nevada state agencies, local governments, Tribal governments, and non-profit organizations for priority infrastructure projects.

Pursuant to Chapter 408 of the Nevada Revised Statutes, the Bank may provide financing for a variety of infrastructure projects, including: transportation facilities, utility infrastructure, digital infrastructure, recycling and sustainability infrastructure, renewable energy infrastructure, social infrastructure, water and wastewater infrastructure, and other infrastructure related to economic development.

The Bank has been capitalized with an initial $75 million in State general obligation bonds that, are allocated to the following accounts within the Nevada State Infrastructure Bank:

- $40 million for projects for the Federal Infrastructure Matching Account;
- $20 million for projects for the Affordable Housing Revolving Account; and
- $15 million for projects for the Charter School Capital Needs Revolving Account.

In evaluating applications, the Bank will also seek to leverage outside capital and federal funding to help finance projects that improve quality of life, strengthen Nevada's climate resiliency, and help to promote a strong economy for communities across the State.

Application Instructions:

Please complete all sections of the application below and attach any required exhibits to request financing from the Nevada State Infrastructure Bank.

Prior to applying to the Bank for financing, please familiarize yourself with all the statutes and regulations governing the operation of the Bank.

The relevant statutory provisions can be found in Chapter 408 of the Nevada Revised Statutes (NRS 408.55048 – 408.55088).

Additionally, the regulations of the Bank provide the application requirements and describe the process for determining qualified projects and borrowers for applications to the Federal Infrastructure Matching Account, the Affordable Housing Revolving Account, and the Charter School Capital Needs Revolving Account.

Applications for financing will be reviewed by Bank staff and may be presented to the Board of Directors of the Nevada State Infrastructure Bank for consideration[1].

Completed, applications may be submitted as follows:

Via electronic mail:

Nevada State Infrastructure Bank

Email: *Financing.application@sib.nv.gov*

Via regular mail:

Nevada State Infrastructure Bank
c/o Executive Director
555 East Washington Avenue, Suite 5200
Las Vegas, Nevada 89101

[1] *Note: submission of an application does not guarantee Board consideration or project funding.*

Part 1: Applicant Information

Legal Name of the Applicant: Lincoln County, Nevada

Type of Applicant:

☒ Governmental Unit

☐ Indian Reservation or Colony

☐ Private Non-Profit Organization created for charitable or educational purposes

If applicant is a governmental unit or non-profit organization, please describe:

The applicant is Lincoln County, Nevada - through the authority which exists for its Board of County Commissioners.

Mailing Address of the Applicant:

Street Address: P.O. Box 90

City, State, Zip Code: Pioche, NV 89043

Name of the Individual Submitting this Application:

Varlin Higbee

Role/Title of the individual submitting the application:

Chair, Board of County Commissioners

Address for the individual submitting the application:

Street Address: P.O. Box 90

City, State, Zip Code: Pioche, NV 89043

Email for Individual submitting the application:

horanch1@icloud.com

Phone number of individual submitting this application:

775-962-2004

Please list the contact information (Name, Address, Phone, Email) for other authorized individuals associated with the project (i.e., consultants, advisors, engineers, attorneys, etc.)

Name: Derick Hembd	Title: President
Organization: SixCo Nevada, Inc.	Phone: 760-509-6060
Street Address: 6841 S. Eastern Ave, Suite 112	Fax: NA
City, State, Zip: Las Vegas, NV 89119	E-mail: derick@sixconv.com
Name: William (Bill) Winkombe	Title: Energy Finance Advisor
Organization: SixCo Nevada, Inc.	Phone: 650-823-7247
Street Address: 6841 S. Eastern Ave, Suite 112	Fax: NA
City, State, Zip: Las Vegas, NV 89119	E-mail: bill@sixconv.com

Part 2: Financing Requested

What type of financial assistance is the Applicant seeking? (Please select all that apply)

- [x] Loan
- [ ] Grant
- [ ] Other Financial Assistance

Financing Amount Requested:

$5 million

Is the State Infrastructure Bank origination fee included in financing? (Please reference the regulations governing the Nevada State Infrastructure Bank)

- [x] Yes
- [ ] No

Financing term requested (Number of years): 5 years

Source of financing repayment:

- [ ] Enterprise Fund
- [ ] Special Fund
- [ ] General Fund Lease
- [ ] Assessment District
- [ ] Special Taxes/Property Related Assessments
- [ ] Voter approved general obligation debt
- [x] Other

Please explain the source(s) of financing repayment:

The primary source of repayment will be the USDA Powering Affordable Clean Energy (PACE) Program funding proceeds for which Lincoln County, as the solar pv/energy and transmission line owner and the seller of electricity to the Lincoln County Power District No. 1 using a Power Purchase Agreement (PPA), has submitted a Letter of Interest to the USDA. This loan will be secured by the project, not the general credit of the Applicant.

The secondary source of repayment will be the pre-paid land lease proceeds from SixCo Nevada for the land to be used for the above system - which are included in the USDA PACE Letter of Interest.

The tertiary source of repayment will land lease proceeds from SixCo's Lincoln County Renewable Energy and Sustainability Complex (LCRESC) industrial park - secured by a lien.

Part 3: Project Information

Project Name: LCPD Local Generation & Resiliency System

Project Address:

Street Address: Crestline Road, (Near the Lincoln County Landfill)

City, State, Zip Code: Panaca, NV 89042

Project Category (Please reference Chapter 408 of the Nevada Revised Statutes):

- ☐ Transportation Facility
- ☒ Utility Infrastructure
- ☐ Water and Wastewater Infrastructure
- ☒ Renewable Energy Infrastructure
- ☐ Digital Infrastructure
- ☐ Recycling and Sustainability Infrastructure
- ☐ Social Infrastructure
- ☒ Other Infrastructure related to Economic Development

If the project category selected was "Other Infrastructure related to Economic Development" please explain the project:

This $5 million SIB loan request is to secure the land and fund needed studies. Overall, this $45.35 million project is intended to create a local source of renewable energy generation within Lincoln County and to replace the electricity which Lincoln County Power District No. 1 has to purchase on the open market to make up for the shortfall of electricity available from Hoover Dam.
In calendar year 2022 these open market purchases led to an approximate $935,000 operating loss for the Lincoln County Power District. As a result customer rate increases have occurred to offset this loss - thereby reducing the disposal income available to Lincoln County residential and non-residential customers.

Is the project located in any of the following? (Please select all that apply)

☐ In a qualified census tract as designated by the United States Secretary of Housing and Urban Development pursuant to 26 U.S.C. § 42(d)(5)(B)(ii)

☐ In a census tract which has a high level of social vulnerability as determined according to the Social Vulnerability Index developed by the Centers for Disease Control and Prevention of the United States Department of Health and Human Services

☐ In a community which has a large percentage of the population having limited English proficiency

☐ In a community that has been subject to historical instances of redlining, segregation or other discriminatory practices

Is any part of the proposed project located on Tribal land?

☐ Yes

■ No

Please attach a detailed description of the project. If the funding request is limited to a portion of the project, please identify as appropriate. If you have a feasibility study, a capital improvement plan, environmental study, or other such reports containing a detailed description of the project, please include as appropriate.

Attach all necessary documents as Exhibit 1. [Please label and attach items as Exhibits 1a, 1b, 1c, etc.]

If funding for the project is approved by the Nevada State Infrastructure Bank Board of Directors, how long will it take for this project to be completed?

Estimated 5 years from date of permit issuance

Please list applicable permits for the project:

Type of Permit (Please include permit number)	Granting Authority	Date Submitted	Date Received	Expiration Date
None applied for				

Please complete the attached Project Sources and Uses of Proceeds Table (located on page 22 of this document) as Exhibit 2. Attach any and all cost estimates, bids, project labor agreements, and construction contracts, if available. [Please label and attach them as Exhibits 2a, 2b, 2c, etc.]

Please provide for any and all documentation commitment(s) for project funding sources other than financing from the State Infrastructure Bank. This could include resolutions, grant agreements, loan agreements, contracts, etc. [Please label and them as Exhibit 3]

Is land acquisition a component of the project?

☐ Yes

☒ No

If yes, please provide a copy of the purchase agreement as Exhibit 4. Include a description of the land that has been or will be acquired (current owner, address, assessor's parcel number, purchase date or expected purchase date, cost or estimated cost), and identify the funding source(s) for the land below:

Does the applicant already own the land needed for the project?

☐ Yes

☒ No

Please provide a comprehensive project timeline as Exhibit 5. Include specific project milestones such a preliminary engineering report, all required permits, design, engineering, land/right-of-way acquisition, preparation of bid documents, awarding of construction contract, construction start date, construction completion date, and the date that the project will become operational.

Private Activity - Will any entity, including a governmental entity other than the Applicant, use or directly benefit from any portion of the Project other than as a member of the general public? (For example, will a private entity or a federal agency operate, or lease space in the proposed project?)

☒ Yes

☐ No

If yes, please describe the entity that will use or otherwise benefit from the Project. Provide a copy of the agreement(s) with such private entity, or federal agency. [Please label and attach as Exhibit 6.]

The Lincoln County Power District No. 1, and its customers, will benefit from the purchase of electricity from the solar pv and energy storage system owned by the Applicant - Lincoln County, Nevada

Will financing be used to finance more than 5 percent of any private activity costs?

☐ Yes

☒ No

If yes, please explain:

Business Relocation – Will the proposed Project require the relocation of a private sector business from one area of the State to another?

☐ Yes

☒ No

If yes, please provide a justification to support the move:

Please describe any economic and/or community benefits that will result from the completion of this project. Please include the method, or calculation by which these results were identified:

From 1937 to 2004 the Lincoln County Power District No. 1 (LCPD) received 100% of its electricity from Hoover Dam. Drought conditions have reduced this supply, and as of Fiscal Year 2022, LCPD purchased approximately 27%, or 22.66 million kWhs from other suppliers at an average cost of ~$0.104/kWh - versus a cost for Hoover Dam electricity of less than $0.03/kWh. This resulted in an operating loss of ~$935K – which is being offset by customer rate increases.
This project will replace this electricity at a lower cost per kWh - estimated to be range of $0.07XX/kWh.

What are the total number of jobs that will be created and the average wage for the project? (Please include the method or calculation by which these results were identified)

To be determined during the anticipated Full Application phase of the USDA PACE Program.

What are total number of jobs retained and the average wage? (Please include the method or calculation by which these results were identified)

To be determined during the anticipated Full Application phase of the USDA PACE Program.

Describe the environmental impact that will result from this project? (Please include the method or calculation by which these results were identified)

To be determined during the anticipated Full Application phase of the USDA PACE Program.

Does this project comply with the with the standards and goals set forth in the 2020 Nevada Climate Strategy and the goals for the reduction of greenhouse gas emissions set forth in NRS 445B.380 and 704.7820?

- [x] Yes
- [ ] No
- [ ] Unsure

Useful Life - Please provide evidence detailing the useful life of the Project. Useful life is defined as the estimated number of years the project is anticipated to remain in service. Please include estimated useful life projections with and without any anticipated maintenance costs. [Label and attach as Exhibit 7]

Is this project eligible to apply for funding from the Affordable Housing Revolving Account within the Nevada State Infrastructure Bank Fund? (Please reference the Nevada State Infrastructure Bank regulations for the guidelines and policies for the Affordable Housing Revolving Account.)

- [ ] Yes
- [x] No
- [ ] Unsure

Is this project eligible to apply for funding from the Charter School Capital Needs Revolving Account within the Nevada State Infrastructure Bank Fund? (Please reference the Nevada State Infrastructure Bank regulations for the guidelines and policies for the Charter School Capital Needs Revolving Account.)

- [ ] Yes
- [x] No
- [ ] Unsure

Is this project eligible to apply for funding from the Federal Infrastructure Matching Account within the Nevada State Infrastructure Bank Fund? (Please reference the Nevada State Infrastructure Bank regulations for the guidelines and policies for the Federal Infrastructure Matching Account.)

☐ Yes

☐ No

☒ Unsure

Is this project eligible to apply for funding from the State Infrastructure Bank General Account within the Nevada State Infrastructure Bank Fund? (Please reference the Nevada State Infrastructure Bank regulations for the guidelines and policies for the State Infrastructure Bank General Account.)

☐ Yes

☐ No

☒ Unsure

Part 4: Financial Information

Please provide copies of the five most recent fiscal year-end audited financial statements for the applicant and related parties to the project, if not already provided, as well as applicable revenue projections and cash flows. [Label and attach as Exhibits 8a, 8b, 8c, etc.]

Please provide the current year's adopted budget as Exhibit 9.

Are there any events or circumstances that have occurred since the date of the last financial statement could materially affect the overall financial condition of the Applicant?

☐ Yes

☒ No

If yes, please explain:

In the table below, please list all outstanding financing obligations (debts, notes, capital leases, etc.) secured by the source of repayment for the requested financing. Attach as Exhibit 10, and include a copy of all financing documents (e.g., the official statement along with any underlying loan agreements, lease agreements, or indentures, etc.) [Label and attach as Exhibits 10a, 10b, 10c, etc.]

Name of Lender	Date of Debt	Outstanding Balance (as of _____)	Maximum Annual Debt Service/Lease Payment
		$	$
		$	$
		$	$
		$	$

Please provide a description of any off-balance-sheet debt obligations, including capital leases and other contractual obligations:

None

Has the Applicant defaulted on any debt or other obligation including, but not limited to, bonds, leases, or loans within the last ten years?

☐ Yes

☒ No

If yes, please specify the date(s) and circumstances:

Please attach as Exhibit 11 the current Capital Improvement Plan. Explain below any expected plan for future debt issuance:

Does the Applicant have an Inter-fund Transfer Policy?

☒ Yes

☐ No

If yes, please attach a copy of the policy as Exhibit 15.

Is the Applicant planning on utilizing any collateral in order to receive a loan or other financial assistance?

☒ Yes

☐ No

If yes, please explain:

Following notice from the USDA that a Full Application has been requested based upon Lincoln County's Letter of Interest, this loan will be used to fund pre-development activities needed to submit this Full Application. These activities will include feasibility, engineering, community benefit studies plus a pre-paid land lease for the project in order to control the land required for the project.

Part 5: Loan Proceeds

Will the loan proceeds pay for any general administration or overhead costs?

☐ Yes

☒ No

Have any general administration or overhead costs already been incurred?

☐ Yes

☒ No

If yes, please explain:

Will the Project include the payment of prevailing wages as set forth in NRS Chapter 408?

☐ Yes

☐ No

Will loan proceeds finance preliminary costs for the Project?

☒ Yes

☐ No

Have any preliminary costs already occurred?

☐ Yes

☒ No

If yes, please explain:

Part 6: Legal Information

Please describe the composition of the Applicant's governing body, including the number of positions, term, and the selection/appointment process. Additionally, please provide a current list of individuals in these positions:

Has the governing body approved the application? (Please provide written documentation confirming approval):

Please describe any pending or anticipated litigation and/or contractual disputes that the Applicant is a party to:

Please describe any past, present, or potential issues or controversies that may impact the Project:

For any applicant that is a Charter City, please attach as Exhibit 16 a copy of the City's Charter including all addendums and supplements thereto.

For any applicant that is a School District, Special District, or Joint Powers Authority (JPA), please provide the statutory citation of formation authority or attach a copy of all formation documents and amendments as Exhibit 17.

For any applicant that is a non-profit organization, please provide as Exhibit 18, a copy of the following:

a. Articles of Incorporation, together with all amendments.

b. Certificate of Status/Good Standing in the State of Nevada.

c. Bylaws, together with all amendments.

d. 501 (c)(3) Determination Letter(s) from the IRS, and any related documents and correspondence with/from the IRS.

e. All Form 990s for the last three years

f. All Form 990-Ts for the last three years.

g. Capital Campaign brochures, forms, pledge cards, and related materials, if any.

Applicant acknowledges the following

All information submitted to the Nevada State Infrastructure Bank is true and correct at the time of submission, and such information does not contain any untrue or misleading statement of a material fact or omits to state any material fact necessary to make the statements contained herein not misleading. Further, applicants affirm, understand, and accept the obligations, terms, and conditions of loans and other financial assistance offered by the Bank.

By signing below, I acknowledge that I understand that it is unlawful to knowingly make a false claim, a false statement, use a false of fictitious name, or obtain money or benefit under false pretenses. I understand these acts are a violation of the laws of the State of Nevada punishable by civil penalties, including repayment, and/or criminal penalties including up to a category D felony and six years in state prison.

Print Name: Varlin Higbee

Print Title: Chair, Board of Commissioners

Authorized Signature: Varlin D Higbee

Date: 08/09/2023

Application Checklist

(Complete and submit all required documents below with the Financing Application)

SIB Staff Use	INDICATE WHETHER OR NOT EACH DOCUMENT IS ATTACHED TO THIS APPLICATION			APPLICATION EXHIBITS	
Date Rec'd	*YES*	*NO*	*N/A*		
	◉	○	○	Application	Signed and Dated
	◉	○	○	Exhibit 1	Study, Plan, or Other Report with Detailed Project Description
	○	◉	○	Exhibit 1a	Approval from governing body to submit application
	◉	○	○	Exhibit 2	Sources and Uses of Proceeds Table
	○	◉	○	Exhibit 2a	Detailed cost estimates, bids, and construction contracts, that support Exhibit. Label each Exhibit a, b, c, etc.
	○	◉	○	Exhibit 2b	Explanation of potential environmental impacts potential environmental impacts. -Environmental study.
	○	◉	○	Exhibit 3	Documentation Demonstrating Commitment of Other Project Funding Sources (includes Applicant's contribution). Label each Exhibit a, b, c, etc.
	◉	○	○	Exhibit 3a	Project cash flow projections
	○	○	◉	Exhibit 3b	Bond rating agency report (if available)
	○	○	◉	Exhibit 3c	Existing property tax rates, and general obligation bonding capacity (governmental entities only)
	◉	○	○	Exhibit 3d	Historical revenues and expenses of proposed revenue source
	○	○	◉	Exhibit 4	Real Estate Purchase Agreement (if applicable)
	◉	○	○	Exhibit 5	Project Timeline
	◉	○	○	Exhibit 6	Project Benefit Information
	○	◉	○	Exhibit 6a	Project population trends
	○	◉	○	Exhibit 6b	Project assessed value trends

	○	◉	○	Exhibit 7	Useful Life Exhibit
	○	○	◉	Exhibit 8	Five (5) Years Audited Financial Statements [and any applicable revenue projections and cash flows]. -Cash flow available for debt service and debt service coverage ratio -Label each Exhibit a, b, c, etc.
	○	◉	○	Exhibit 9	Current Year Adopted Budget
	○	◉	○	Exhibit 10	Documentation of Outstanding Debt Obligations Label each Exhibit a, b, c, etc.
	○	◉	○	Exhibit 11	Current Capital Improvement Plan
	○	◉	○	Exhibit 12	Documentation of compliance with Nevada's Climate Strategy for the year 2020 and goals for reduction of greenhouse gas emissions set forth in NRS 445B.380 and 704.7820
	○	◉	○	Exhibit 13	Documentation of project compliance with NSIB regulation Sec. 17 (project labor standards)
	○	○	◉	Exhibit 14	Documentation that the average percentage of pupils who are served by all of those schools and are pupils who are at risk, as defined in NRS 388A.045, is 60% or greater (Charter School fund applicants only)
	○	○	◉	Exhibit 14a	Written authorization for the project from the sponsor of the charter school (Charter School fund applicants only)
	○	◉	○	Exhibit 15	Interfund Transfer Policy/Reimbursement Agreement (if applicable)
	○	○	◉	Exhibit 16	Charter City Information and Questionnaire (if applicable)
	○	○	◉	Exhibit 17	Districts Formation Documents and Amendments (If applicable)
	○	○	◉	Exhibit 18	Non-Profit Applicants Exhibits. (if applicable) Label each Exhibit a, b, c, etc.

Exhibit 2

SOURCES AND USES OF PROCEEDS TABLE

(NOTE: Please attach as Exhibit 2a, detailed cost estimates, bids, and construction contracts, etc. to support data provided in the table.)

PROJECT USES	***PROJECT FUNDING SOURCES***						
	Estimated Life of the Project	**SIB**	**[Applicant]**	**Other**	**Other**	**Other**	**TOTAL**
Land Acquisition							
Building Construction/Renovation							
Construction Contingency							
Machinery/Equipment							
Engineering/Architectural/ Design/Permits/Environmental							
SIB Origination Fee							
Other:							
Other:							
TOTAL							

Please provide the justification in determining the useful life of the Project:

August 2, 2023

Lincoln County, Nevada - Nevada State Infrastructure Bank (SIB) Loan Application – Exhibits

Exhibit 1 – Study, Plan, or Other Report with Detailed Project Description

Lincoln County, Nevada (LC), which was formed in 1866, is the 7th largest US county, in terms of land mass – which approximates the size of the State of Massachusetts, and it has ~4,500 residents as of the 2020 Census (a decline of ~16% from the 2010 Census). 97.8% of the land within Lincoln County is owned by the Federal government.

Lincoln County Power District No.1 (LCPD) was formed in 1937 following the completion of Hoover Dam and commencement of hydroelectricity generation. From 1937 to 2004 LCPD received 100% of its electricity from Hoover Dam. Drought conditions have reduced this supply, and as of Fiscal Year 2022, LCPD purchased approximately 27%, or 22.66 million kWhs from other suppliers at an average cost of ~$0.104/kWh - versus a cost for Hoover Dam electricity of less than $0.03/kWh. This resulted in an operating loss of ~$935K – which is being offset by customer rate increases.

Type of loan being requested - Project Loan

Project name – LCPD Local Generation & Resiliency System

Location – Near Lincoln County Landfill, Crestline Road, Nevada - 37°39'6.80"N, 114° 7'15.16"W

Type – solar pv/energy storage system (ESS) & transmission lines

Size – 10MW DC solar pv; 5MW ESS with 4-6 hour discharge; and, ~17 miles of 138 kV steel-tower transmission lines to connect to from generation site to the LCPD grid

Renewable energy units generated - ~20 million kWhs annually – which will be scheduled/dispatched on a daily basis in coordination with LCPD's allocation of Hoover Dam hydroelectricity.

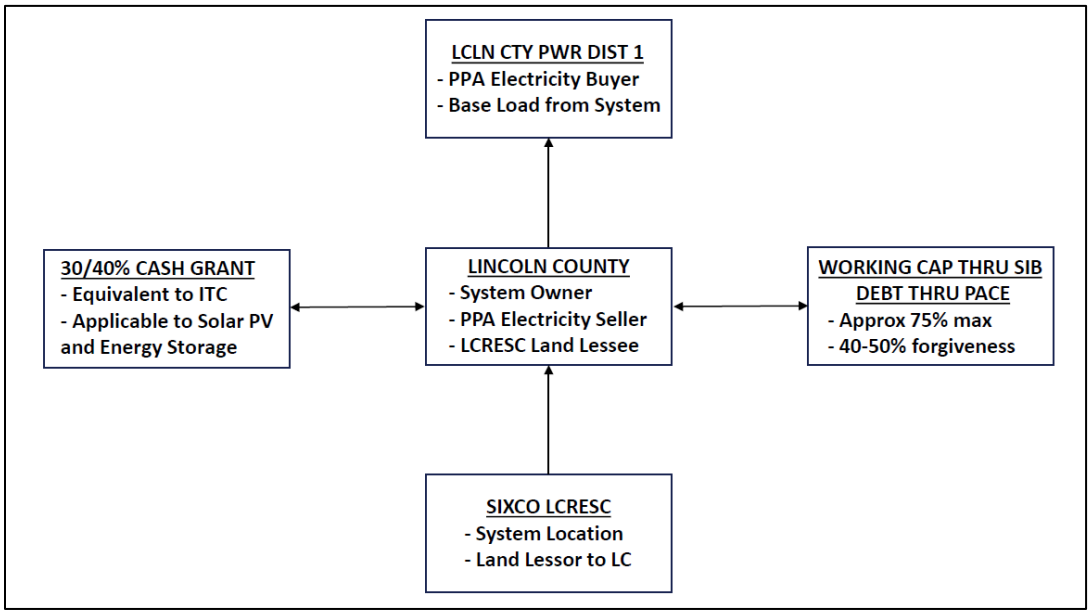

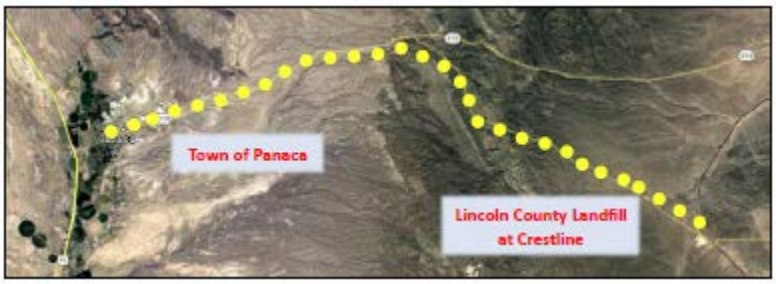

Exhibit 1a – Approval from governing body to submit application
Resolution from Lincoln County Board of Commissioners to be provided

Exhibit 2 – Sources and Uses of Proceeds Table

Lincoln County / Lincoln County Power District PPA - Sources and Uses of Funds

Uses ($MM)			% of Total
10MW DC Solar System incl Interconnection*		$ 22.50	49.61%
5MW Energy Storage System (4-6 hour daily discharge)*		$ 5.00	11.03%
17 miles - steel-pole 138kV Transmission Line		$ 8.00	17.64%
35 Year Prepaid Land Lease at LCRESC		$ 4.85	10.69%
Progress Payment Interest (2/3 Cash Grant Eligible)*		$ 5.00	11.03%
	Total	**$ 45.35**	**100.00%**

Sources ($MM)			% of Total
40% Cash Grant - Utilizing US Content*		$ 12.35	27.23%
USDA PACE Loan		$ 33.00	72.77%
	Total	**$ 45.35**	**100.00%**

USDA PACE Loan Forgiveness - 40% - Benefit to LCPD Customers	$ (13.20)
Net USDA PACE Loan	$ 19.80

Nevada State Infrastructure Bank to provide working capital/progress payment financing

Exhibit 2a – Detailed cost estimates, bids, and construction contracts that support Exhibit
To be provided if/when this Project moves to the USDA Full Application Phase

Exhibit 2b – Explanation of potential environmental impacts
To be provided if/when this Project moves to the USDA Full Application Phase

Exhibit 3 – Documentation Demonstrating Commitment of Other Project Funding Sources (includes Applicant's contribution)
To be provided if/when this Project moves to the USDA Full Application Phase

LCRESC - USDA PACE LCPD LC

INPUTS								
Solar System Size MW DC (ITC Eligible)	10	Input	PPA Rate ($0.XX/kWh)	$ 0.0725	Input	Annual LCRESC Land Lease - $/Acre	$ 7,000	Input
Acres per MW DC	4	Input	PPA Term (Years)	35	Fixed	Prepaid LCRESC Land Lease	Yes	Input
LCRESC Acreage for Solar PV	40	Calculated	PPA Annual Escalator (%)	2.00%	Input	Annual LCRESC Land Lease Amt	$ -	Calculated
ESS MW included in Solar System	5.00	Input				Annual LCRESC Escalator (%)	0.00%	Input
			Solar PV kWh/kW	2,000	Input			
Solar System Cost per kW DC incl Design & Dev Fees	$ 2.75	Input	Annual MWh Production	20,000	Calculated	Progress Payment Interest Rate	5.00%	Input
Solar System Cost - incl Design & Dev Fees ($MM)	$ 27.50	Calculated	Annual Module Derate	0.50%	Input	Progress Payment - Avg Loan Outstanding for 5 Years - $MM	$ 20.16	Calculated
						Progress Payment Interest - included in PACE Loan Amt - $MM	$ 5.04	Calculated
ITC Equiv Cash Grant - % of Solar/Storage Eligible Costs	40.00%	Input	O&M Cost - 1st Year ($/MW DC)	$ 7,000	Input			
			O&M Term (Years)	26	Fixed	PACE Loan Amt (% of Total Cost)	$ (20,611,959)	Calculated
Transmission Line Cost (incl interconnection) - $MM	$ 8.00	Input	O&M Annual Escalator (%)	5.00%	Input	Loan Term	35	Fixed
From LCRESC to Panaca (Not ITC Eligible)						Loan Interest Rate (%)	5.00%	Input
			Insurance Cost - 1st Year ($/MW DC)	$ 16,000	Input	PACE Loan Forgiveness %	40%	Input
Prepaid LCRESC Land Lease - Annual Discount Rate	5.00%	Input	Insurance Term (Years)	26	Fixed			
Prepaid LCRESC Land Lease - PV for 35 Year Term - $MM	$ 4.81	Calculated	Insurance Annual Escalator (%)	5.00%	Input	Net PACE Loan Amt	$ (20,611,959)	Calculated
						Monthly Payment (Arrears)	$104,026.02	Calculated
Total Cost - Solar System, Trans Line, Prepaid Lease, PP Interest ($MM)	$ 45.35	Calculated	Inverter Replacement Cost ($/MW DC)	$ 30,000	Input			
			Replacement Years	12 and 26	Fixed			

	Year 0	Year 1	Year 2	Year 3	Year 4	Year 5	Year 6	Year 7	Year 8	Year 9	Year 10	Year 11	Year 12	Year 13	Year 14	Year 15	Year 16	Year 17	Year 18
Solar PV and ESS System Cost (ITC Equiv Cash Grant Eligible) - $MM	$ (27,500,000)																		
less: Cash Grant - $MM - Equity for PACE Program	$ 11,000,000																		
Net Solar PV and ESS System Cost - $MM	**$ (16,500,000)**																		
Transmission Line Cost (Incl interconnection), Prepaid Land Lease, PP Interest - $MM	**$ (17,853,265)**																		
Total USDA PACE Loan	$ (34,353,265)																		
less: USDA PACE Loan Forgiveness	$ 13,741,306																		
Net USDA Loan - Amortized 35 years	**$ (20,611,959)**																		
Annual Solar Production MWh		20,000	19,900	19,801	19,701	19,603	19,505	19,407	19,310	19,214	19,118	19,022	18,927	18,832	18,738	18,645	18,551	18,459	18,366
PPA Revenue - adjusted for annual derate		$ 1,450,000	$ 1,471,605	$ 1,493,532	$ 1,515,786	$ 1,538,371	$ 1,561,292	$ 1,584,556	$ 1,608,166	$ 1,632,127	$ 1,656,446	$ 1,681,127	$ 1,706,176	$ 1,731,598	$ 1,757,399	$ 1,783,584	$ 1,810,159	$ 1,837,131	$ 1,864,504
less: O&M and Insurance		$ (230,000)	$ (241,500)	$ (253,575)	$ (266,254)	$ (279,566)	$ (293,545)	$ (308,222)	$ (323,633)	$ (339,815)	$ (356,805)	$ (374,646)	$ (393,378)	$ (413,047)	$ (433,699)	$ (455,384)	$ (478,153)	$ (502,061)	$ (527,164)
less: Inverter Replacement													$ (300,000)						
less: Loan Payments		$ (1,248,312)	$ (1,248,312)	$ (1,248,312)	$ (1,248,312)	$ (1,248,312)	$ (1,248,312)	$ (1,248,312)	$ (1,248,312)	$ (1,248,312)	$ (1,248,312)	$ (1,248,312)	$ (1,248,312)	$ (1,248,312)	$ (1,248,312)	$ (1,248,312)	$ (1,248,312)	$ (1,248,312)	$ (1,248,312)
less: Land Lease Payments		$ -	$ -	$ -	$ -	$ -	$ -	$ -	$ -	$ -	$ -	$ -	$ -	$ -	$ -	$ -	$ -	$ -	$ -
Total Expenses		**$ (1,478,312)**	**$ (1,489,812)**	**$ (1,501,887)**	**$ (1,514,566)**	**$ (1,527,879)**	**$ (1,541,857)**	**$ (1,556,534)**	**$ (1,571,945)**	**$ (1,588,127)**	**$ (1,605,118)**	**$ (1,622,958)**	**$ (1,941,690)**	**$ (1,661,359)**	**$ (1,682,011)**	**$ (1,703,696)**	**$ (1,726,466)**	**$ (1,750,373)**	**$ (1,775,476)**
Net Cash Flow to LC from LCPD PPA		**$ (28,312)**	**$ (18,207)**	**$ (8,355)**	**$ 1,220**	**$ 10,492**	**$ 19,436**	**$ 28,022**	**$ 36,220**	**$ 44,000**	**$ 51,328**	**$ 58,169**	**$ (235,514)**	**$ 70,239**	**$ 75,387**	**$ 79,887**	**$ 83,694**	**$ 86,757**	**$ 89,027**
Cumulative Cash Flow		**$ (28,312)**	**$ (46,519)**	**$ (54,875)**	**$ (53,655)**	**$ (43,163)**	**$ (23,727)**	**$ 4,294**	**$ 40,514**	**$ 84,515**	**$ 135,843**	**$ 194,012**	**$ (41,502)**	**$ 28,736**	**$ 104,124**	**$ 184,011**	**$ 267,705**	**$ 354,462**	**$ 443,489**

	Year 19	Year 20	Year 21	Year 22	Year 23	Year 24	Year 25	Year 26	Year 27	Year 28	Year 29	Year 30	Year 31	Year 32	Year 33	Year 34	Year 35	Total
Annual Solar Production MWh	18,274	18,183	18,092	18,002	17,912	17,822	17,733	17,644	17,556	17,468	17,381	17,294	17,208	17,122	17,036	16,951	16,866	643,646
PPA Revenue - adjusted for annual derate	**$ 1,892,285**	**$ 1,920,480**	**$ 1,949,095**	**$ 1,978,137**	**$ 2,007,611**	**$ 2,037,524**	**$ 2,067,883**	**$ 2,098,695**	**$ 2,129,965**	**$ 2,161,702**	**$ 2,193,911**	**$ 2,226,601**	**$ 2,259,777**	**$ 2,293,448**	**$ 2,327,620**	**$ 2,362,302**	**$ 2,397,500**	**$ 65,988,093**
less: O&M and Insurance	$ (553,522)	$ (581,199)	$ (610,258)	$ (640,771)	$ (672,810)	$ (706,450)	$ (741,773)	$ (778,862)	$ (817,805)	$ (858,695)	$ (901,630)	$ (946,711)	$ (994,047)	$ (1,043,749)	$ (1,095,937)	$ (1,150,733)	$ (1,208,270)	**$ (20,773,671)**
less: Inverter Replacement						$ (300,000)												**$ (600,000)**
less: Loan Payments	$ (1,248,312)	$ (1,248,312)	$ (1,248,312)	$ (1,248,312)	$ (1,248,312)	$ (1,248,312)	$ (1,248,312)	$ (1,248,312)	$ (1,248,312)	$ (1,248,312)	$ (1,248,312)	$ (1,248,312)	$ (1,248,312)	$ (1,248,312)	$ (1,248,312)	$ (1,248,312)	$ (1,248,312)	**$ (43,690,927)**
less: Land Lease Payments	$ -	$ -	$ -	$ -	$ -	$ -	$ -	$ -	$ -	$ -	$ -	$ -	$ -	$ -	$ -	$ -	$ -	$ -
Total Expenses	**$ (1,801,835)**	**$ (1,829,511)**	**$ (1,858,571)**	**$ (1,889,084)**	**$ (1,921,122)**	**$ (2,254,763)**	**$ (1,990,085)**	**$ (2,027,174)**	**$ (2,066,117)**	**$ (2,107,007)**	**$ (2,149,942)**	**$ (2,195,023)**	**$ (2,242,359)**	**$ (2,292,061)**	**$ (2,344,249)**	**$ (2,399,046)**	**$ (2,456,582)**	**$ (65,064,597)**
Net Cash Flow to LC from LCPD PPA	**$ 90,450**	**$ 90,969**	**$ 90,525**	**$ 89,053**	**$ 86,489**	**$ (217,238)**	**$ 77,798**	**$ 71,521**	**$ 63,849**	**$ 54,695**	**$ 43,969**	**$ 31,577**	**$ 17,418**	**$ 1,386**	**$ (16,629)**	**$ (36,744)**	**$ (59,082)**	**$ 923,496**
Cumulative Cash Flow	**$ 533,940**	**$ 624,909**	**$ 715,434**	**$ 804,487**	**$ 890,976**	**$ 673,737**	**$ 751,536**	**$ 823,057**	**$ 886,905**	**$ 941,600**	**$ 985,570**	**$ 1,017,147**	**$ 1,034,565**	**$ 1,035,951**	**$ 1,019,322**	**$ 982,578**	**$ 923,496**	

Exhibit 3b – Bond rating agency report (if available)
Not applicable – Loan secured by project

Exhibit 3c – Existing property tax rates, and general bonding capacity (governmental entities only)
Not applicable – property tax exempt to Lincoln County as owner

Exhibit 3d – Historical revenues and expenses of proposed revenue source
Available through the following link to the Lincoln County Power District No. 1 -
https://www.lcpd1.com/sites/default/files/2023-02/Lincoln%20County%20Power%20District%20Audit%20Report%20%28Final%29%20FY2022.pdf

Exhibit 4 - Real Estate Purchase Agreement, if applicable
Not applicable – Applicant will be entering into a long-term land lease for the project.

Exhibit 5 – Project Timeline

Task Name	Solar PV/Storage Duration (months)	Transmission Line Duration (months)
USDA Funding Commitment	Month 0	Month 0
Preliminary Design	3	3
Regulatory Approvals	6	15
Final Design and Approvals	6	6
Geotech - Soils		
50P Structural		
50P Electrical		
Interconnection Application		
90P Plans (Both)		
100P Plans (Both)		
County Approvals		
Procurement	15	15
NTP w Material Orders		
Module Delivery		
Racking		
Switchgear		
Transformer - Solar PV&Storage		
Transmission Poles		
Wire		
Transformer - Grid		
Installation	6	12
Foundations		
Racking		
Modules		
Electrical		
Switchgear		
Transformer/Solar PV&Storage		
Transmission Poles		
Wire		
Transformer/Grid		
Utility Interconnection		
Substantial Completion	1	1
Final Completion and Commissioning	2	2
Total Project Duration (months)	**39**	**54**

Exhibit 6 – Project Benefit Information
This project will lower the electricity purchase cost for LCPD by approximately $600,000 annually – offsetting about 2/3 of the LCPD operating losses for fiscal year 2022.

Exhibit 6a – Project Population Trends
Will be provided by Lincoln County, if applicable

Exhibit 6b – Project Assessed Value Trends
Will be provided by Lincoln County, if applicable

Exhibit 7 – Useful Life Exhibit
To be provided if/when this Project moves to the USDA Full Application Phase

Exhibit 8 – Five (5) Years Audited Financial Statements – Cashflow available for debt service and debt service coverage ratio
This loan will be secured by the Project and the related cashflow – and not an full-recourse obligation of the Applicant

Exhibit 9 – Current Year Adopted Budget
Will be provided by Lincoln County, if applicable
Exhibit 10 – Documentation of Outstanding Debt Obligations
Will be provided by Lincoln County, if applicable

Exhibit 11 – Current Capital Improvement Plan
Will be provided by Lincoln County, if applicable

Exhibit 12 – Documentation of compliance with Nevada's Climate Strategy for the year 2020 and goals for reduction of greenhouse gas emissions set forth in NRS 445B.380 and 704.7820
Will be provided by Lincoln County, if applicable

Exhibit 13 – Documentation of project compliance with NSIB regulation Sec. 17 (project labor standards)
Will be provided by Lincoln County, if applicable

Exhibit 14 – (Charter School fund applicants only)
Not applicable

Exhibit 14a – (Charter School fund applicants only)
Not applicable

Exhibit 15 – Interfund Transfer Policy/Reimbursement Agreement (if applicable)
Will be provided by Lincoln County, if applicable

Exhibit 16 – Charter City Information and Questionnaire (if applicable)
Will be provided by Lincoln County, if applicable

Exhibit 17 – Districts Formation Documents and Amendments (if applicable)
Will be provided by Lincoln County, if applicable

Exhibit 18 – Non-Profit Applicants Exhibits (if applicable)
Will be provided by Lincoln County, if applicable

LCPD Local Generation & Resiliency System

- **Objective:** To replace the ~15% higher-cost "open-market" electricity purchases for LCPD needed to supplement the electricity supplied by Hoover Dam with **40% lower-cost**, locally controlled, baseload electricity
- **Funding Mechanism:** Utilize Available Federal Government Programs – USDA PACE (Powering Affordable Clean Energy), Cash Grants, and Inflation Reduction Act (IRA)
- **ABSOLUTE REQUIREMENT: All funds available to develop and permanently fund this system MUST BE without financial, or any other, liability to Lincoln County and the Lincoln County Power District**
  - **This requirement has been confirmed through direct discussions with Governor Lombardo, the Nevada State Infrastructure Bank, and the USDA**

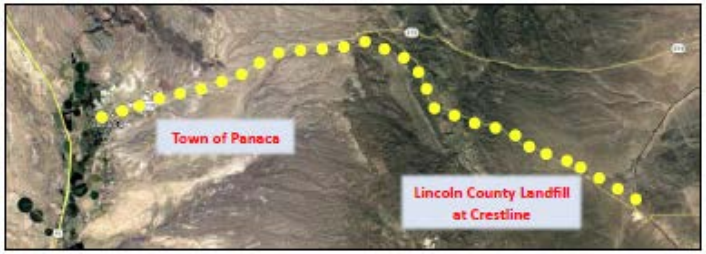

Lincoln County / Lincoln County Power District PPA - Sources and Uses of Funds

Uses ($MM)		% of Total
5MW DC Solar System incl Interconnection*	$ 11.25	53.60%
0MW Energy Storage System (4-6 hour daily discharge)*	$ -	0.00%
25 miles - wood-pole 25kV Transmission Line	$ 5.00	23.82%
35 Year Prepaid Land Lease at LCRESC	$ 2.41	11.48%
Progress Payment Interest (2/3 Cash Grant Eligible)*	$ 2.33	11.10%
Total	**$ 20.99**	**100.00%**

Sources ($MM)		% of Total
40% Cash Grant - Utilizing US Content*	$ 8.13	38.72%
USDA PACE Loan	$ 12.86	61.28%
Total	**$ 20.99**	**100.00%**

USDA PACE Loan Forgiveness - 40% - Benefit to LCPD Customers	$ (5.14)
Net USDA PACE Loan	$ 7.72

Nevada State Infrastructure Bank to provide working capital/progress payment financing

Why Is Lincoln County Generated Electricity Needed for LCPD Customer Rate Stability?

For Non-Hoover Dam Supplied Electricity, LCPD competes against CA in the Open-Market Pricing for Supply Shortfalls – In the Fall 2022, for a brief period, this Cost to LCPD was approximately $1.60/kWh = $1,600/MWh

http://www.caiso.com/TodaysOutlook/Pages/prices.html

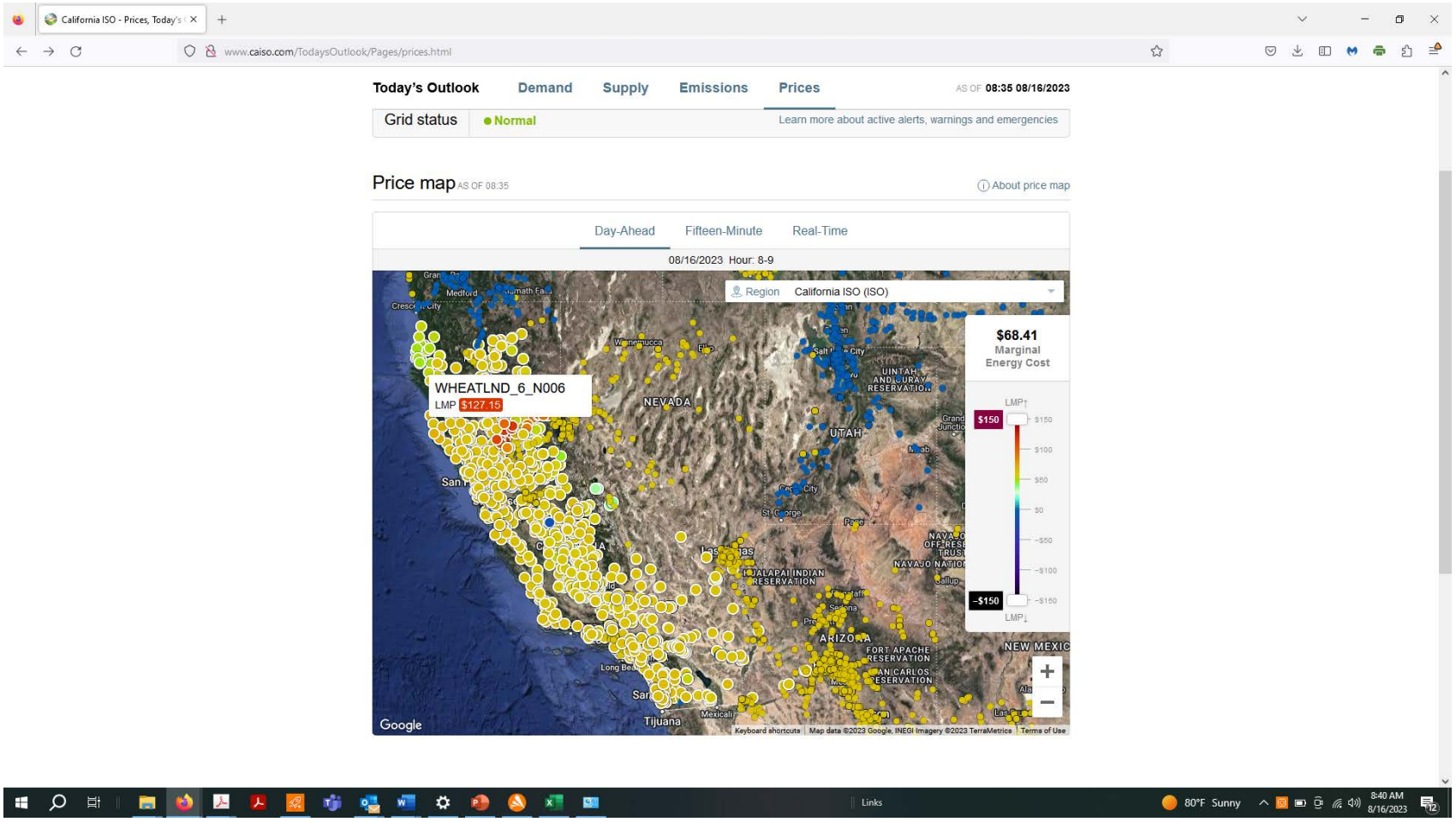

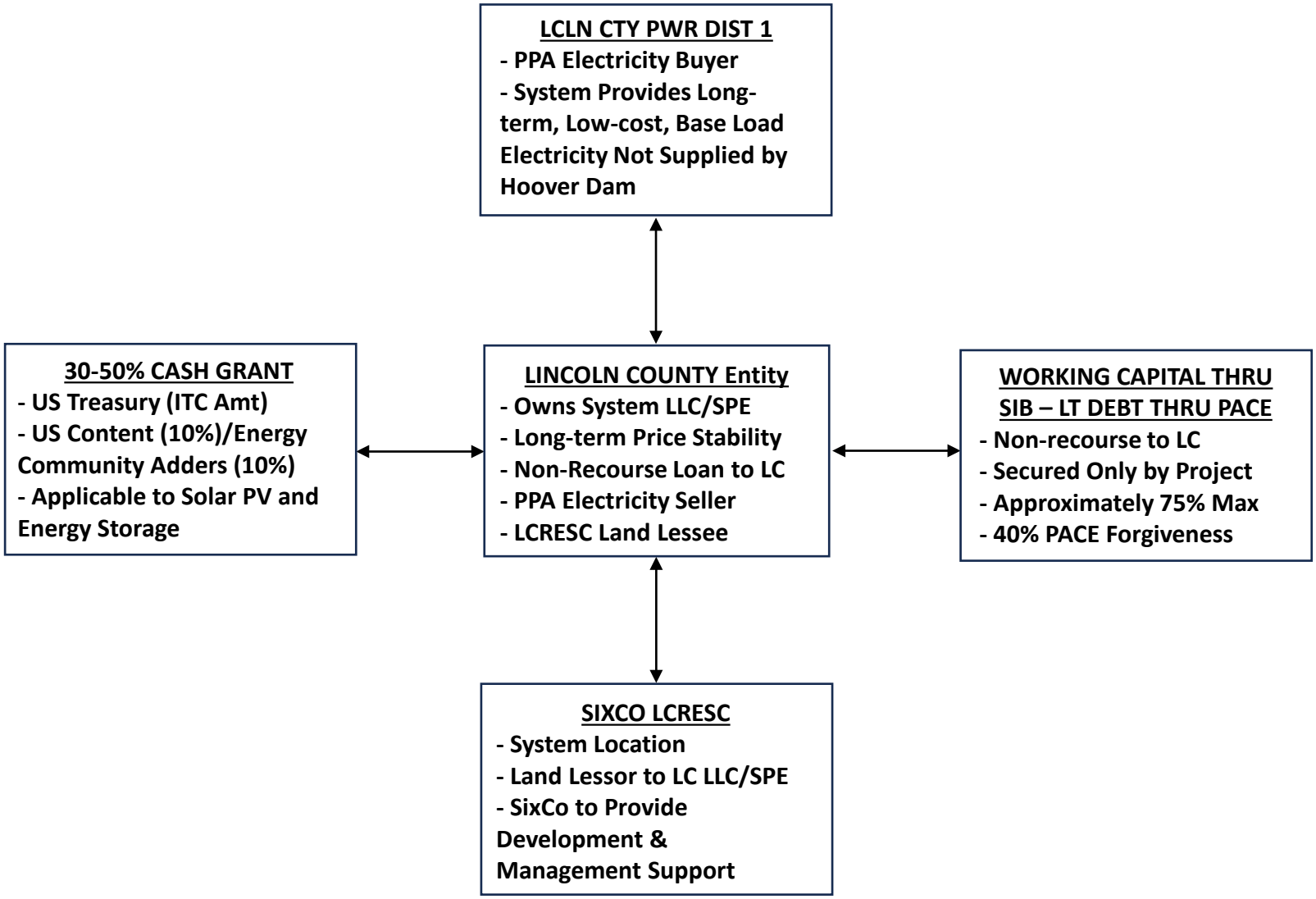
LCLN CTY PWR DIST 1
- PPA Electricity Buyer
- System Provides Long-term, Low-cost, Base Load Electricity Not Supplied by Hoover Dam
30-50% CASH GRANT
- US Treasury (ITC Amt)
- US Content (10%)/Energy Community Adders (10%)
- Applicable to Solar PV and Energy Storage
LINCOLN COUNTY Entity
- Owns System LLC/SPE
- Long-term Price Stability
- Non-Recourse Loan to LC
- PPA Electricity Seller
- LCRESC Land Lessee
WORKING CAPITAL THRU SIB – LT DEBT THRU PACE
- Non-recourse to LC
- Secured Only by Project
- Approximately 75% Max
- 40% PACE Forgiveness
SIXCO LCRESC
- System Location
- Land Lessor to LC LLC/SPE
- SixCo to Provide Development & Management Support

PROJECT TIMELINE – INCLUDING FINANCING MILESTONES

Month 0 – Lincoln County Letter of Intent Submitted to USDA PACE Program for Evaluation - Jul 26 23
- Estimated 1 month for USDA Full Application Invitation Decision

Months 3-4 – USDA PACE Invitation for Full Application – 60 day deadline – Need Access to initial Working Capital for Necessary Studies, Agreements, and Pre-paid Land Lease to Develop and Submit Full Application – Utilize the Lincoln County Special Infrastructure Fund (short-term), if needed

Months 1-4 – Lincoln County $5MM Non-Recourse Loan Submittal to NV State Infrastructure Bank (SIB) - Aug 09 23 – Upon Approval, SIB Funds will be used to repay the Lincoln County Special Infrastructure Fund (see above)

Months 4-6 – USDA PACE Full Application Evaluation – If Approved, Includes Non-Recourse Loan and Related Documents – USDA Funding does not occur until completion of project – 36–60 months estimated

Months 7-60 – Nevada SIB to Provide Additional working capital to bridge the multi-year gap from USDA PACE Commitment to USDA PACE Permanent Funding (including partial loan forgiveness) and US Treasury Cash Grants upon Project Completion and Commencement of Electricity Generation

Years 5-35 – USDA PACE Non-Recourse Loan Term – secured by the Project LLC, the PPA, and Long-term Pre-paid Land Lease

LCPD Local Generation & Resiliency System

- **Additional Collateral/Security for the SIB Working Capital Loan:** The LC/LCPD 5MW solar system, and related substation for the transmission line interconnection, will be located on the 199 Acre SixCo LCRESC parcel shown below. During the SIB working capital loan period, SixCo will provide a first lien to the SIB against both this parcel and the 960 Acre SixCo LCRESC parcel in exchange for the pre-payment of the $2.41 million land lease – as shown on the first page under Sources and Uses. SixCo is currently in escrow to purchase these parcels – along with ~300 acre-feet of annual vested water rights.

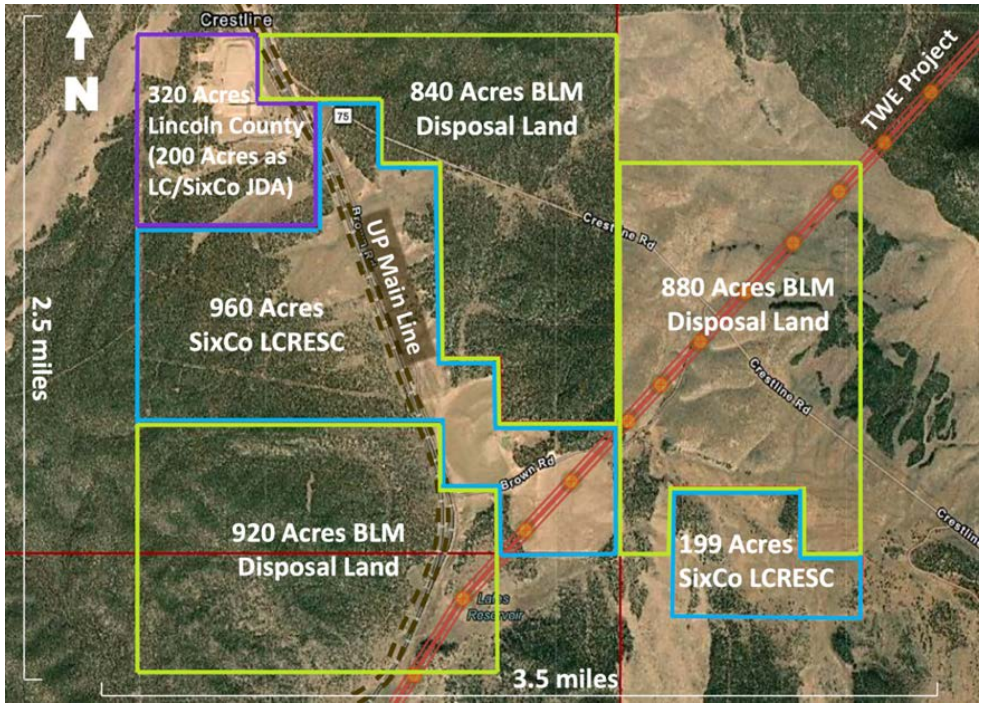

From:	Friedel, Zane - RD, IL
To:	Bill Vinnicombe
Cc:	Denice Brown; Derick Hembd
Subject:	RE: [External Email]RE: NV_LINCOLN, COUNTY OF (INC)-Request for Additional Information
Date:	Wednesday, August 30, 2023 1:09:39 PM
Attachments:	image001.png

Bill,

In Level 1 review, we just make sure all of the necessary information is present. Level 2 reviews the information to determine if you meet the all eligibility requirements and gives their recommendations. Level 3 review is the financial and engineering review, which ultimately determines if you will receive an invitation to apply for the PACE program or if you are denied/ineligible.

Thank you,

Zane Friedel
Accountant | Community and Utilities Branch | Business, Electric and Telephone Section
Direct Loan Division
Servicing Office | Business Center
Rural Development / United States Department of Agriculture
Phone (Branch): 314-457-4049 | Fax: 844-655-2429
www.rd.usda.gov



USDA is an equal opportunity provider, employer, and lender.

**** Please direct all borrower correspondence, both RUS & FFB, to the Business, Electric & Telecom Section's branch email address at rd.nfaoc.tesb@usda.gov and include your borrower reference number in the subject line.***

***** The Customer Initiated Payment (CIP) link to submit payments: https://rdupcip.sc.egov.usda.gov***

****** Please make note of the contact information you provided Loan Servicing (email, phone & mail) and notify us immediately of any changes at rd.nfaoc.tesb@usda.gov and include your borrower reference number & "Contact Info" in the subject line.***

From: Bill Vinnicombe <bill@sixconv.com>
Sent: Wednesday, August 30, 2023 2:47 PM
To: Friedel, Zane - RD, IL <Zane.Friedel@usda.gov>
Cc: Denice Brown <dbrown@lincolnnv.com>; Derick Hembd <Derick@sixconv.com>
Subject: RE: [External Email]RE: NV_LINCOLN, COUNTY OF (INC)-Request for Additional Information

Zane –

Thanks for this useful information. Looks like we should expect 6-8 weeks from now for a final invitation decision to be made.

Can you describe the general parameters for the Level 2 and Level 3 reviews?

Much appreciated.

Regards,
Bill

From: Friedel, Zane - RD, IL <Zane.Friedel@usda.gov>
Sent: Wednesday, August 30, 2023 12:42 PM
To: Bill Vinnicombe <bill@sixconv.com>
Cc: Denice Brown <dbrown@lincolnnv.com>; Derick Hembd <Derick@sixconv.com>
Subject: RE: [External Email]RE: NV_LINCOLN, COUNTY OF (INC)-Request for Additional Information

Bill,

There are 3 levels of review. It looks like they are starting to send invitations to apply out to the first batch of applicants. The Level 1 reviews for these applicants were completed in mid-July just to give you a reference on how long it may take to receive an invitation to apply for the PACE program.

Thank you,

Zane Friedel
Accountant | Community and Utilities Branch | Business, Electric and Telephone Section
Direct Loan Division
Servicing Office | Business Center
Rural Development / United States Department of Agriculture
Phone (Branch): 314-457-4049 | Fax: 844-655-2429
www.rd.usda.gov



USDA is an equal opportunity provider, employer, and lender.

**** Please direct all borrower correspondence, both RUS & FFB, to the Business, Electric & Telecom Section's branch email address at rd.nfaoc.tesb@usda.gov and include your borrower reference number in the subject line.***

***** The Customer Initiated Payment (CIP) link to submit payments: https://rdupcip.sc.egov.usda.gov***

****** Please make note of the contact information you provided Loan Servicing (email, phone & mail) and notify us immediately of any changes at rd.nfaoc.tesb@usda.gov and include your borrower reference number & "Contact Info" in the subject line.***

From: Bill Vinnicombe <bill@sixconv.com>
Sent: Wednesday, August 30, 2023 2:30 PM
To: Friedel, Zane - RD, IL <Zane.Friedel@usda.gov>
Cc: Denice Brown <dbrown@lincolnnv.com>; Derick Hembd <Derick@sixconv.com>

Subject: RE: [External Email]RE: NV_LINCOLN, COUNTY OF (INC)-Request for Additional Information

Zane –

Thanks for the feedback. How many levels of review are involved before a final decision on a Full Application Invitation would be made?

Regards,
Bill

From: Friedel, Zane - RD, IL <Zane.Friedel@usda.gov>
Sent: Wednesday, August 30, 2023 12:20 PM
To: Bill Vinnicombe <bill@sixconv.com>
Cc: Denice Brown <dbrown@lincolnnv.com>; Derick Hembd <Derick@sixconv.com>
Subject: RE: [External Email]RE: NV_LINCOLN, COUNTY OF (INC)-Request for Additional Information

Bill,

Your LOI has passed Level 1 review and has been sent onto Level 2 review.

Thank you,

Zane Friedel
Accountant | Community and Utilities Branch | Business, Electric and Telephone Section
Direct Loan Division
Servicing Office | Business Center
Rural Development / United States Department of Agriculture
Phone (Branch): 314-457-4049 | Fax: 844-655-2429
www.rd.usda.gov



USDA is an equal opportunity provider, employer, and lender.

**** Please direct all borrower correspondence, both RUS & FFB, to the Business, Electric & Telecom Section's branch email address at rd.nfaoc.tesb@usda.gov and include your borrower reference number in the subject line.***

***** The Customer Initiated Payment (CIP) link to submit payments: https://rdupcip.sc.egov.usda.gov***

****** Please make note of the contact information you provided Loan Servicing (email, phone & mail) and notify us immediately of any changes at rd.nfaoc.tesb@usda.gov and include your borrower reference number & "Contact Info" in the subject line.***

From: Bill Vinnicombe <bill@sixconv.com>
Sent: Wednesday, August 30, 2023 2:18 PM
To: Friedel, Zane - RD, IL <Zane.Friedel@usda.gov>; sm.rd.rus-Electric-EPIRA01@usda.gov

Cc: Denice Brown <dbrown@lincolnnv.com>; Derick Hembd <Derick@sixconv.com>
Subject: RE: [External Email]RE: NV_LINCOLN, COUNTY OF (INC)-Request for Additional Information

Zane –

Thanks for the receipt confirmation. We look forward to the next step(s).

Regards,
Bill

From: Friedel, Zane - RD, IL <Zane.Friedel@usda.gov>
Sent: Wednesday, August 30, 2023 11:47 AM
To: Bill Vinnicombe <bill@sixconv.com>; sm.rd.rus-Electric-EPIRA01@usda.gov
Cc: Denice Brown <dbrown@lincolnnv.com>; Derick Hembd <Derick@sixconv.com>
Subject: RE: [External Email]RE: NV_LINCOLN, COUNTY OF (INC)-Request for Additional Information

Received.

Thank you,

Zane Friedel
Accountant | Community and Utilities Branch | Business, Electric and Telephone Section
Direct Loan Division
Servicing Office | Business Center
Rural Development / United States Department of Agriculture
Phone (Branch): 314-457-4049 | Fax: 844-655-2429
www.rd.usda.gov



USDA is an equal opportunity provider, employer, and lender.

**** Please direct all borrower correspondence, both RUS & FFB, to the Business, Electric & Telecom Section's branch email address at rd.nfaoc.tesb@usda.gov and include your borrower reference number in the subject line.***

***** The Customer Initiated Payment (CIP) link to submit payments: https://rdupcip.sc.egov.usda.gov***

****** Please make note of the contact information you provided Loan Servicing (email, phone & mail) and notify us immediately of any changes at rd.nfaoc.tesb@usda.gov and include your borrower reference number & "Contact Info" in the subject line.***

From: Bill Vinnicombe <bill@sixconv.com>
Sent: Wednesday, August 30, 2023 12:47 PM
To: sm.rd.rus-Electric-EPIRA01@usda.gov
Cc: Friedel, Zane - RD, IL <Zane.Friedel@usda.gov>; Denice Brown <dbrown@lincolnnv.com>; Derick Hembd <Derick@sixconv.com>

Subject: FW: [External Email]RE: NV_LINCOLN, COUNTY OF (INC)-Request for Additional Information

To Whom It May Concern –

Please note that Denice Brown from Lincoln County, NV is on vacation through this coming Monday – Labor Day, hence I am sending this email and the requested Project Shapefile attachment on her behalf.

At your earliest convenience, please confirm receipt of this email.

Much appreciated.

Regards,
Bill

_____
Bill Vinnicombe | Energy Finance Advisor
SixCo of Nevada
T: 650.823.7247
E: bill@sixconv.com

6841 S. Eastern Ave, Suite 103
Las Vegas, NV 89119

www.sixconv.com

The information transmitted is intended only for the person or entity to which it is addressed and may contain confidential and/or privileged material. Any review, retransmission, dissemination or other use of, or taking of any action in reliance upon this information by persons or entities other than the intended recipient is prohibited. If you received this in error, please contact the sender and delete the material from any computer. SixCo Nevada Inc.

From: Bill Vinnicombe
Sent: Tuesday, August 29, 2023 9:33 AM
To: 'Friedel, Zane - RD, IL' <Zane.Friedel@usda.gov>
Cc: Denice Brown <dbrown@lincolnnv.com>; Derick Hembd <Derick@sixconv.com>
Subject: RE: [External Email]RE: NV_LINCOLN, COUNTY OF (INC)-Request for Additional Information

Zane –

Thanks for your feedback.

As requested in your letter dated August 18, Denice will email the attached Project Shapefile to sm.rd.rus-Electric-EPIRA01@usda.gov with a cc to you.

Your assistance has been greatly appreciated.

Regards,
Bill

From: Friedel, Zane - RD, IL <Zane.Friedel@usda.gov>
Sent: Tuesday, August 29, 2023 9:22 AM
To: Bill Vinnicombe <bill@sixconv.com>
Cc: Denice Brown <dbrown@lincolnnv.com>; Derick Hembd <Derick@sixconv.com>
Subject: RE: [External Email]RE: NV_LINCOLN, COUNTY OF (INC)-Request for Additional Information

Bill,

I have Denice as the POC on the PACE LOI spreadsheet we are working with and I will add Varlin Higbee as an additional POC in your file.

Thank you,

Zane Friedel
Accountant | Community and Utilities Branch | Business, Electric and Telephone Section
Direct Loan Division
Servicing Office | Business Center
Rural Development / United States Department of Agriculture
Phone (Branch): 314-457-4049 | Fax: 844-655-2429
www.rd.usda.gov



USDA is an equal opportunity provider, employer, and lender.

**** Please direct all borrower correspondence, both RUS & FFB, to the Business, Electric & Telecom Section's branch email address at rd.nfaoc.tesb@usda.gov and include your borrower reference number in the subject line.***

***** The Customer Initiated Payment (CIP) link to submit payments: https://rdupcip.sc.egov.usda.gov***

****** Please make note of the contact information you provided Loan Servicing (email, phone & mail) and notify us immediately of any changes at rd.nfaoc.tesb@usda.gov and include your borrower reference number & "Contact Info" in the subject line.***

From: Bill Vinnicombe <bill@sixconv.com>
Sent: Tuesday, August 29, 2023 11:16 AM
To: Friedel, Zane - RD, IL <Zane.Friedel@usda.gov>
Cc: Denice Brown <dbrown@lincolnnv.com>; Derick Hembd <Derick@sixconv.com>
Subject: RE: [External Email]RE: NV_LINCOLN, COUNTY OF (INC)-Request for Additional Information

Hello, Zane –

Thanks for the Shapefile confirmation.

With respect to the other open item, which is the title of the point of contact – we have two options. Please let me know which one is, or perhaps both are, preferred:

1. Denice Brown, Commissioners Assistant/Grants Administrator; 775-962-8063; dbrown@lincolnnv.com
2. Varlin Higbee, Chair – County Commissioners; 775-962-2004; horanch1@icloud.com

The Project Shapefile and appropriate contact information will be uploaded following your feedback.

Much appreciated.

Regards,
Bill

From: Friedel, Zane - RD, IL <Zane.Friedel@usda.gov>
Sent: Tuesday, August 29, 2023 5:19 AM
To: Bill Vinnicombe <bill@sixconv.com>
Cc: Denice Brown <dbrown@lincolnnv.com>; Derick Hembd <Derick@sixconv.com>
Subject: RE: [External Email]RE: NV_LINCOLN, COUNTY OF (INC)-Request for Additional Information

Bill,

Looks good. Go ahead and upload the file, so our Mapping Team can review the shapefile.

Thank you,

Zane Friedel
Accountant | Community and Utilities Branch | Business, Electric and Telephone Section
Direct Loan Division
Servicing Office | Business Center
Rural Development / United States Department of Agriculture
Phone (Branch): 314-457-4049 | Fax: 844-655-2429
www.rd.usda.gov



USDA is an equal opportunity provider, employer, and lender.

**** Please direct all borrower correspondence, both RUS & FFB, to the Business, Electric & Telecom Section's branch email address at rd.nfaoc.tesb@usda.gov and include your borrower reference number in the subject line.***

***** The Customer Initiated Payment (CIP) link to submit payments: https://rdupcip.sc.egov.usda.gov***

****** Please make note of the contact information you provided Loan Servicing (email, phone & mail) and notify us immediately of any changes at rd.nfaoc.tesb@usda.gov and include your borrower reference number & "Contact Info" in the subject line.***

From: Bill Vinnicombe <bill@sixconv.com>
Sent: Monday, August 28, 2023 4:52 PM
To: Friedel, Zane - RD, IL <Zane.Friedel@usda.gov>; SM.RD.RDInnovationData <RD.Innovation.Data@usda.gov>
Cc: Denice Brown <dbrown@lincolnnv.com>; Derick Hembd <Derick@sixconv.com>
Subject: RE: [External Email]RE: NV_LINCOLN, COUNTY OF (INC)-Request for Additional Information

Zane –

Thanks for the clarification with respect to the project location shapefile, and confirmation that you were able to access the service area shapefile previously provided.

Please confirm that the attached zip file complies with your request. If so, Denice and I will coordinate on uploading this file and providing the additional information needed to complete this LOI.

This project opportunity has a high degree of positive visibility within Lincoln County and the State of Nevada – including Governor Lombardo. Your timely involvement is greatly appreciated.

Regards,
Bill

From: Friedel, Zane - RD, IL <Zane.Friedel@usda.gov>
Sent: Monday, August 28, 2023 12:37 PM
To: Bill Vinnicombe <bill@sixconv.com>; SM.RD.RDInnovationData <RD.Innovation.Data@usda.gov>
Cc: Denice Brown <dbrown@lincolnnv.com>; Derick Hembd <Derick@sixconv.com>
Subject: RE: [External Email]RE: NV_LINCOLN, COUNTY OF (INC)-Request for Additional Information

Bill,

We are needing the project location shapefile (where the project will be constructed). This appears to be the same as the original shapefile you sent, which is the service area shapefile.

Thank you,

Zane Friedel
Accountant | Community and Utilities Branch | Business, Electric and Telephone Section
Direct Loan Division
Servicing Office | Business Center
Rural Development / United States Department of Agriculture
Phone (Branch): 314-457-4049 | Fax: 844-655-2429
www.rd.usda.gov



USDA is an equal opportunity provider, employer, and lender.

**** Please direct all borrower correspondence, both RUS & FFB, to the Business, Electric & Telecom Section's branch email address at rd.nfaoc.tesb@usda.gov and include your borrower reference number in the subject line.***

***** The Customer Initiated Payment (CIP) link to submit payments: https://rdupcip.sc.egov.usda.gov***

****** Please make note of the contact information you provided Loan Servicing (email, phone &***

mail) and notify us immediately of any changes at rd.nfaoc.tesb@usda.gov and include your borrower reference number & "Contact Info" in the subject line.

From: Bill Vinnicombe <bill@sixconv.com>
Sent: Monday, August 28, 2023 11:22 AM
To: SM.RD.RDInnovationData <RD.Innovation.Data@usda.gov>
Cc: Friedel, Zane - RD, IL <Zane.Friedel@usda.gov>; Denice Brown <dbrown@lincolnnv.com>; Derick Hembd <Derick@sixconv.com>
Subject: [External Email]RE: NV_LINCOLN, COUNTY OF (INC)-Request for Additional Information

Some people who received this message don't often get email from bill@sixconv.com. Learn why this is important

[External Email]
If this message comes from an **unexpected sender** or references a **vague/unexpected topic;**
Use caution before clicking links or opening attachments.
Please send any concerns or suspicious messages to: Spam.Abuse@usda.gov

To Whom It May Concern –

Please note that I created another Shapefile zip file and related screenshot (pdf attachment) using the RUS tool in the Microsoft Edge browser.

Please confirm that this revised Shapefile is acceptable. If so, it will be submitted using the directions provided by Zane Friedel in the third attachment.

I look forward to your feedback.

Regards,
Bill Vinnicombe

_____

Bill Vinnicombe | Energy Finance Advisor
SixCo of Nevada
T: 650.823.7247
E: bill@sixconv.com

6841 S. Eastern Ave, Suite 103
Las Vegas, NV 89119

www.sixconv.com

The information transmitted is intended only for the person or entity to which it is addressed and may contain confidential and/or privileged material. Any review, retransmission, dissemination or other use of, or taking of any action in reliance upon this information by persons or entities other than the intended recipient is prohibited. If you received this in error, please contact the sender and delete the material from any computer. SixCo Nevada Inc.

From: Bill Vinnicombe
Sent: Monday, August 28, 2023 8:31 AM
To: rd.innovation.data@usda.gov
Cc: zane.friedel@usda.gov; Denice Brown <dbrown@lincolnnv.com>; Derick Hembd <Derick@sixconv.com>
Subject: FW: NV_LINCOLN, COUNTY OF (INC)-Request for Additional Information

To Whom It May Concern -

SixCo Nevada is working with Lincoln County, NV on the referenced Letter of Interest (LOI) for the Powering Affordable Clean Energy (PACE) Program.

I do have a question about the Shapefile. The RUS tool was used to create the Shapefile which was submitted with the LOI. Is it possible that the type of browser used to create the Shapefile impacted the integrity of the Shapefile Zip Folder provided – such that it could not be opened or used?

Please feel free to contact me directly at 650-823-7247 since time is of the essence.

Much appreciated.

Regards,
Bill Vinnicombe

_____
Bill Vinnicombe | Energy Finance Advisor
SixCo of Nevada
T: 650.823.7247
E: bill@sixconv.com

6841 S. Eastern Ave, Suite 103
Las Vegas, NV 89119

www.sixconv.com

The information transmitted is intended only for the person or entity to which it is addressed and may contain confidential and/or privileged material. Any review, retransmission, dissemination or other use of, or taking of any action in reliance upon this information by persons or entities other than the intended recipient is prohibited. If you received this in error, please contact the sender and delete the material from any computer. SixCo Nevada Inc.

From: Denice Brown <dbrown@lincolnnv.com>
Sent: Thursday, August 24, 2023 7:14 AM
To: Derick Hembd <Derick@sixconv.com>; Bill Vinnicombe <bill@sixconv.com>
Subject: Fwd: NV_LINCOLN, COUNTY OF (INC)-Request for Additional Information

I have received this from USDA. Is this something you will take care of or do I need to?

Thank you,

Denice Brown
Commissioners Asst/Grants
dbrown@lincolnnv.com
775-962-8063

From: "Zane Friedel, RD, IL" <Zane.Friedel@usda.gov>
To: dbrown@lincolnnv.com
Cc: "SM.RD.RUS-Electric-EPIRA01" <SM.RD.RUS.EPIRA01@usda.gov>
Sent: Friday, August 18, 2023 5:23:53 AM
Subject: NV_LINCOLN, COUNTY OF (INC)-Request for Additional Information

Good Morning,

See attached letter. Please Reply All to this email with your updated documents. Failure to do so may result in delays in review. Please direct questions on the geospatial mapping tool or other Shapefile related questions to RD.Innovation.Data@usda.gov

Thank you,

Zane Friedel
Accountant | Community and Utilities Branch | Business, Electric and Telephone Section
Direct Loan Division
Servicing Office | Business Center
Rural Development / United States Department of Agriculture
Phone (Branch): 314-457-4049 | Fax: 844-655-2429
www.rd.usda.gov



USDA is an equal opportunity provider, employer, and lender.

**** Please direct all borrower correspondence, both RUS & FFB, to the Business, Electric & Telecom Section's branch email address at rd.nfaoc.tesb@usda.gov and include your borrower reference number in the subject line.***

***** The Customer Initiated Payment (CIP) link to submit payments: https://rdupcip.sc.egov.usda.gov***

****** Please make note of the contact information you provided Loan Servicing (email, phone & mail) and notify us immediately of any changes at rd.nfaoc.tesb@usda.gov and include your borrower reference number & "Contact Info" in the subject line.***

This electronic message contains information generated by the USDA solely for the intended recipients. Any unauthorized interception of this message or the use or disclosure of the information it contains may violate the law and subject the violator to civil or criminal penalties. If you believe you have received this message in error, please notify the sender and delete the email immediately.

accordance with 40 U.S.C. 31, sections 3141 through 3144, 3146, and 3147.

6. *Federal Funding Accountability and Transparency Act.* All Applicants, in accordance with 2 CFR part 25, must be registered in SAM and have a UEI number as stated in Section D.3 of this notice. All recipients of Federal financial assistance are required to report information about first-tier sub-awards and executive total compensation in accordance with 2 CFR part 170.

7. *Civil Rights Act.* All grants made under this notice are subject to Title VI of the Civil Rights Act of 1964 as required by the USDA in 7 CFR part 15, subpart A (eCFR:: 7 CFR part 15 Subpart A—Nondiscrimination in Federally-Assisted Programs of the Department of Agriculture—Effectuation of Title VI of the Civil Rights Act of 1964) and section 504 of the Rehabilitation Act of 1973, Title VIII of the Civil Rights Act of 1968, Title IX, Executive Order 13166 (Limited English Proficiency), Executive Order 11246, and the Equal Credit Opportunity Act of 1974.

8. *Nondiscrimination Statement.* In accordance with Federal civil rights laws and U.S. Department of Agriculture (USDA) civil rights regulations and policies, the USDA, its Mission Areas, agencies, staff offices, employees, and institutions participating in or administering USDA programs are prohibited from discriminating based on race, color, national origin, religion, sex, gender identity (including gender expression), sexual orientation, disability, age, marital status, family/parental status, income derived from a public assistance program, political beliefs, or reprisal or retaliation for prior civil rights activity, in any program or activity conducted or funded by USDA (not all bases apply to all programs). Remedies and complaint filing deadlines vary by program or incident.

Program information may be made available in languages other than English. Persons with disabilities who require alternative means of communication to obtain program information (*e.g.,* Braille, large print, audiotape, American Sign Language) should contact the responsible Mission Area, agency, or staff office; the USDA TARGET Center at (202) 720–2600 (voice and TTY); or the 711 Relay Service.

To file a program discrimination complaint, a complainant should complete a Form AD–3027, USDA Program Discrimination Complaint Form, which can be obtained online at *https://www.usda.gov/oascr/program-discrimination-complaint-filing,* from any USDA office, by calling (866) 632–9992, or by writing a letter addressed to USDA. The letter must contain the complainant's name, address, telephone number, and a written description of the alleged discriminatory action in sufficient detail to inform the Assistant Secretary for Civil Rights (ASCR) about the nature and date of an alleged civil rights violation.

The completed AD–3027 form or letter must be submitted to USDA by:

(1) *Mail:* U.S. Department of Agriculture, Office of the Assistant Secretary for Civil Rights, 1400 Independence Avenue SW, Washington, DC 20250–9410; or

(2) *Fax:* (833) 256–1665 or (202) 690–7442; or

(3) *Email: program.intake@usda.gov.*

USDA is an equal opportunity provider, employer, and lender.

Andrew Berke,

Administrator, Rural Utilities Service, USDA Rural Development.

[FR Doc. 2023–10392 Filed 5–15–23; 8:45 am]
BILLING CODE 3410–15–P

DEPARTMENT OF AGRICULTURE

Rural Utilities Service

[Docket#: RUS–23–ELECTRIC–0003]

Notice of Funding Opportunity for the Powering Affordable Clean Energy (PACE) Program

AGENCY: Rural Utilities Service, USDA.

ACTION: Notice.

SUMMARY: The Rural Utilities Service (RUS or the Agency), a Rural Development (RD) Agency of the United States Department of Agriculture (USDA), is soliciting Letters of Interest (LOI) for loan Applications, announcing the Application process for those loans, and providing deadlines for Applications from eligible entities under the Powering Affordable Clean Energy (PACE) Program. These loan funds will be made to qualified PACE Applicants to finance power generation Projects for Renewable Energy Resource (RER) systems or Energy Storage Systems (ESS) that support RER Projects. The PACE Program has $1,000,000,000 available in appropriated funds under the Inflation Reduction Act of 2022 (IRA).

DATES: Letters of Interest (LOIs) can be submitted beginning at 11:59 a.m. Eastern Time (ET) on June 30, 2023, until 11:59 a.m. ET September 29, 2023.

An applicant that is invited by RUS to proceed with the loan Application will have 60 days, or a time agreeable to the Agency, to complete and submit a loan Application beginning from the date the Invitation to Proceed is emailed to the PACE Applicant. If the deadline to submit the completed Application falls on Saturday, Sunday, or a Federal holiday, the Application is due the next business day. RUS reserves the right, in its sole discretion, to extend the deadline upon the written request of the applicant if the applicant demonstrates to the satisfaction of the Administrator that exceptional circumstances exist to warrant the extension.

ADDRESSES:

Letters of Interest (LOI) Submissions. All LOIs must be submitted to RUS electronically through an on-line application window. The Agency will finalize the specific requirements of submitting the LOI through the on-line application window by notice in the **Federal Register** and the RUS website at *https://www.rd.usda.gov/programs-services/electric-programs/powering-affordable-clean-energy-pace-program* on or before June 30, 2023.

Application Submissions. LOI submitters chosen to proceed with the loan Application must submit a completed loan Application package in accordance with the instructions provided in the RUS' Invitation to Proceed.

Other information. Additional information and resources are available at *https://www.rd.usda.gov/programs-services/electric-programs/powering-affordable-clean-energy-pace-program.* Information on IRA Funding for RD is located at the following website: *https://www.rd.usda.gov/inflation-reduction-act#fn.*

FOR FURTHER INFORMATION CONTACT: Christopher A. McLean, Assistant Administrator, Electric Program, RUS, RD, USDA, 1400 Independence Avenue SW, STOP 1568, Washington, DC 20250–1560; Telephone: 202–690–4492; Email: *SM.RD.RUS.IRA.Questions@usda.gov.*

SUPPLEMENTARY INFORMATION:

Overview

Federal Awarding Agency Name: Rural Utilities Service (RUS).

Funding Opportunity Title: Powering Affordable Clean Energy (PACE) Program.

Announcement Type: Notice of Funding Opportunity (NOFO).

Assistance Listing: 10.757.

Dates: Letters of Interest (LOIs) can be submitted beginning at 11:59 a.m. Eastern Time (ET) on June 30, 2023 until 11:59 a.m. ET September 29, 2023.

An applicant that is invited by RUS to proceed with the loan Application

will have 60 days, or within a time agreeable to the Agency to complete and submit a loan Application beginning from the date the Invitation to Proceed is emailed to the PACE Applicant. If the deadline to submit the completed Application falls on Saturday, Sunday, or a Federal holiday, the Application is due the next business day. RUS reserves the right, in its sole discretion, to extend the deadline upon the written request of the applicant if the applicant demonstrates to the satisfaction of the Administrator that exceptional circumstances exist to warrant the extension.

Rural Development Key Priorities: The Agency encourages applicants to consider projects that will advance the following key priorities:

- Assisting rural communities to recover economically through more and better market opportunities and through improved infrastructure;
- Ensuring all rural residents have equitable access to Rural Development (RD) programs and benefits from RD funded projects; and
- Reducing climate pollution and increasing resilience to the impacts of climate change through economic support to rural communities.

A. Program Description

1. *Purpose of the Program.* The IRA contains many transformative provisions. Importantly, it makes the largest investment in clean energy in U.S. history, allowing communities that have previously been left out of the clean energy economy to access affordable, reliable, and clean energy. The IRA also marks the largest investment in rural electrification since the 1930s, providing unique opportunities to advance economic development and quality of life in rural communities. The Biden-Harris Administration has prioritized these initiatives, elevating the role of infrastructure and the needs of rural America in its policies and their implementation.

The goal of the PACE Program is to support clean, affordable energy growth across America. The PACE Program provides loans to eligible entities, with varying levels of loan forgiveness, for Projects that generate and/or store electricity from RER.

2. *Statutory and Regulatory Authority.* PACE is authorized under Section 22001 of the Inflation Reduction Act, (IRA) Public Law 117–169 (IRA). Other Federal statutes and regulations that apply to this notice are: Section 317 of the Rural Electrification Act of 1936, 7 U.S.C. 940g (RE Act), 7 U.S.C. 8103, 7 CFR parts 1700–1730, 1767, 1773, and 1787, and 7 CFR part 1970.

The PACE Program is to be carried out by the RUS pursuant to Section 22001 of the IRA. Section 22001 of the IRA amends Section 9003 of the Farm Security and Rural Investment Act of 2002 by adding new subsection (h). Section 22001 of the IRA provides RUS with $1,000,000,000 in appropriated funds ''for the cost of loans under Section 317 of the RE Act.'' Additionally, Section 22001 of the IRA provides that PACE funds may be utilized to finance Projects that store electricity generated from eligible renewable energy sources listed under Section 317 of the RE Act. These Project Loans or System Loans will be forgiven up to 50 percent, or more under certain circumstances, provided the Awardee and the Project otherwise meet the term and conditions of the loan forgiveness.

Pursuant to Section 317(b) of the RE Act, loans shall be made for the purpose of constructing electric generation from renewable energy sources. Section 22001 of the IRA also provides that loan funds may be utilized for Projects that store electricity for such generation facilities. Further, Section 317(b) requires that the power generated from the eligible renewable energy source be for resale to rural and nonrural residents. Lastly, Section 317(c) requires that the rate of a loan shall be equal to the average tax-exempt municipal rate of similar maturities.

3. *Definitions.* The definitions applicable to this notice are as follows:

Administrator. The Administrator of the RUS, an agency under the RD mission area of the USDA.

Agency. The Rural Utilities Service (RUS).

Application. An application containing all information required by RUS as identified in the Invitation to Proceed. The application is materially complete in form and substance satisfactory to RUS within the specified time.

Award. The financial assistance offered to a PACE Applicant.

Awardee. An entity that has been awarded a PACE Award.

Commercially Available Technology. Equipment, devices, applications, or systems that have a proven, reliable performance, and replicable operating history specific to the proposed application. The equipment, device, application, or system is based on established patented design or has been certified by an industry-recognized organization and subject to installation, operating, and maintenance procedures generally accepted by industry practices and standards. Service and replacement parts for the equipment, device, application, or system must be readily available in the marketplace with established warranty applicable to parts, labor, and performance.

Commitment Letter. The notification issued by the Administrator to a PACE Applicant containing the total Award amount, the acceptable security arrangement, the proposed level of loan forgiveness, and such controls and conditions on the PACE Awardee's financial, investment, operational and managerial activities deemed necessary by the Administrator to adequately secure the Government's interest. This notification will also describe the accounting standards and audit requirements applicable to the Award.

Community Benefit Plan. The PACE Applicant's explanation as to how the Project will benefit the residents of the service area identified in the Application.

Distressed and Disadvantaged Communities. A Disadvantaged Community is determined by the Agency by using the Council on Environmental Quality's Climate and Economic Justice Screening Tool (which is incorporated into the USDA look-up map) which identifies communities burdened by climate change and environmental injustice. Distressed Community is determined by the Agency by using the Economic Innovation Group's Distressed Communities Index (which is incorporated into the USDA look-up map), which uses several socio-economic measures to identify communities with low economic well-being. To determine if your Project is located in a Disadvantaged Community or a Distressed Community, please use the following USDA look-up map: *https://ruraldevelopment.maps.arcgis.com/apps/webappviewer/index.html?id=4acf083be4c44bb7864d90f97de0c788.*

Energy Community. A community as defined by the Department of Treasury and the Internal Revenue Service at *https://www.irs.gov/pub/irs-drop/n-23-29.pdf* or through future governmental guidance.

Energy Storage System (ESS). A facility capable of accepting energy, storing the energy for a period of time, and then later releasing the stored energy in support of a Renewable Energy Resource (RER).

Environmental Attributes. All financial attributes that are created or otherwise arise from the Project's generation of electricity from a renewable or zero emission energy system that include but are not limited to, any environmental air quality

credits, green credits, renewable energy credits (RECs), carbon credits, emissions reduction credits, emission rate credits, certificates, tags, offsets, allowances, etc.

Environmental and Historic Preservation Requirements. The National Environmental Policy Act of 1969, as amended (NEPA) (42 U.S.C 4321, *et seq.*), Section 7 of the Endangered Species Act (16 U.S.C. 1531 *et seq.*), and Section 106 of the National Historic Preservation Act (NHPA)(54 U.S.C. 300101 *et seq.*), as well as their implementing regulations at 7 CFR part 1970, Environmental Policies and Procedures (including Farmland Protection Policy Act Implementation Policy), 50 CFR part 402, Interagency Cooperation, and 36 CFR part 800, Protection of Historic Properties.

Financial Feasibility. An eligible entity's ability as determined by the Administrator to generate sufficient revenues to cover its expenses, sufficient cash flow to service its debts and obligations as they come due, and meet the financial ratios set forth in the applicable loan documents.

Indian Tribe. The term ''Indian Tribe'' has the meaning given the term in 25 U.S.C 5304.

Invitation to Proceed. A written notification issued by RUS to the applicant acknowledging that the Letter of Interest (LOI) was received and reviewed and inviting the applicant to submit an Application. The notification also provides the applicant instructions on how to submit the loan Application package and details of the next steps in the Application process.

Letter of Interest (LOI). An electronically signed submission made through the RUS window completed by an eligible entity notifying RUS of its intent to apply for a loan and addressing all the elements identified in Section D.2(a) of this notice.

Non-Federal Entities. As defined in 2 CFR 200.1, Non-Federal Entities are States, local governments, Indian Tribes, institutions of higher education (IHE), or nonprofit organizations. The definition of what constitutes a non-profit is also located in 2 CFR 200.1.

Off-Taker. Shall mean: (1) the customers or members of the PACE Applicant that purchase and receive the electrical power and energy from the PACE Applicant; or (2) the entity that has or will execute a Power Purchase Agreement (PPA) with the PACE Applicant to purchase and receive electrical capacity and associated energy produced by the Project. The Off-Taker may also be referred to in the PPA as the ''Buyer'', ''Customer'', ''Purchaser'' or another name that describes the entity purchasing the power.

Power Purchase Agreement (PPA). A binding agreement executed between the PACE Applicant and an Off-Taker under which the Off-Taker agrees to purchase and receive from the PACE Applicant the electrical capacity and associated energy produced by the Project at a pre-determined price and term. The PPA may include other transactions such as the selling and purchasing of Environmental Attributes or ancillary services (*e.g.,* voltage regulation and synchronization, contingency reserves).

Powering Affordable Clean Energy (PACE) Applicant. An eligible entity that has submitted an Application pursuant to an Invitation to Proceed.

Project. New facilities constructed after the effective date of the IRA and compliant with all other applicable requirements of this notice used to generate electricity from an RER, and/or to store electricity that support the types of RERs that are eligible to be financed with PACE Program loan funds, as provided in Section 22001 of the IRA and Section 317 of the RE Act, which will result in the deployment of renewable energy generation or storage capacity.

Project Loans. A PACE Award secured by a security interest in the assets and revenues of the Project and supporting credit enhancements relating to the Project rather than by a security interest in all of the assets of the PACE Applicant's electric utility system. Any PACE Award to a PACE Applicant that is not a current operating utility shall be a Project Loan.

Renewable Energy Resource or *Renewable Energy Source (RER).* An energy conversion system fueled from a solar, wind, hydropower, biomass, or geothermal source of energy as defined in Section 317(a) of the RE Act.

Rural Area. A rural area shall mean:

(a) Any area other than a city, town, or unincorporated area that has a population of greater than 20,000 inhabitants. or

(b) Service areas of current RUS Borrowers or former RUS and Rural Electrification Act (REA) borrowers which will be deemed rural for the purposes of their Applications.

Rural Partners Network (RPN). The RPN is an alliance of Federal agencies and commissions working directly with rural communities to expand rural prosperity through job creation, infrastructure development, and community improvement.

RUS Borrower. A current RUS borrower under the RE Act.

Secretary. The Secretary of the United States Department of Agriculture.

Substantially Underserved Trust Area (SUTA). An area defined under Section 306F of the RE Act.

System Loans. PACE Awards secured through a senior security interest in all assets of the PACE Applicant, which must be a currently operating electric utility.

4. *Application of Awards.* LOIs will be queued as they are received and reviewed on rolling basis in the order they are received. The Agency will review and evaluate LOIs based on the criteria found in Section E.1(a) of this notice. Upon review of the LOI, RUS may issue an Invitation to Proceed to the applicant. The Agency will review the loan Application and evaluate it based on the criteria found in Section E.1(b) of this notice. The Agency advises all interested parties that the applicant bears the full burden in preparing and submitting an LOI, as well as its Application submission as a PACE Applicant, in response to this notice.

B. Federal Award Information

1. *Type of Award:* Loan & Loan Forgiveness.

2. *Fiscal Year Funds:* 2023 & 2024.

3. *Available Funds:* Total appropriated amount of $1 billion in appropriated funds through September 30, 2031. However, based on projected subsidy rates, RUS expects to have approximately $2.7 billion available to lend for the PACE Program. There will be a minimum of $300 million of appropriated funds committed to each category outlined in this Section of the notice.

RUS may, at its discretion, increase the total level of funding available in this funding round or in any category in this funding round from any available source provided the Awards meet the requirements of the statute which made the funding available to the Agency.

4. *Award Amounts:* The maximum loan amount, inclusive of the forgivable portion, of any individual Award is limited to $100,000,000. The minimum amount of any individual Award is $1,000,000.

5. *Loan Type:* RUS will offer both Project Loans and System Loans as described below.

(a) *Project Loans.* This loan type applies to applicants that are not eligible for, or have decided not to pursue, a System Loan. Project Loans will be used to finance specific eligible Projects where the Award will be secured through a senior security interest on the Project's assets and the revenues generated from the Project's assets. A Project may also require the Awardee to commit additional cash reserves. Further, to the extent that a

PPA is in place with respect to the Project's assets, the Awardee must collaterally assign the PPA to RUS as security, with the Off-Taker's consent to such assignment. The Administrator may consider tax credits or direct payments in lieu of tax credits the Awardee receives under the Internal Revenue Code when calculating equity investment requirements for a PACE Applicant's proposed Project. If the Administrator allows a PACE Applicant to meet the financial equity requirement by utilizing applicable tax benefits, the Administrator may require additional credit support from the PACE Applicant pending the PACE Applicant's receipt of the tax benefit. Further, the Agency may utilize its authority under Section 306F of the RE Act and finance up to 100% of the cost of Projects benefitting SUTA areas. Project Award funds will only be released after commercial operation of the Project is commenced and RUS has confirmed that the Awardee has satisfied all other conditions specified in the Award.

(b) *System Loans.* System Loans are only available to currently operating electric utilities. The PACE Applicant will provide, if it has not already provided, RUS with a perfected senior lien on all of its existing assets, both real and personal, including intangible personal property, as well as after-acquired property. At the Administrator's discretion, PACE Applicants which are generation and transmission suppliers may be permitted to secure a System Loan through an indenture, provided that RUS is granted a perfected senior security interest in all its assets by the trustee. System Loans may finance 100% of the Project costs included in an Application. At the discretion of the Administrator, System Loan funds can be released to finance Projects for costs incurred during construction of the facilities; however, loan forgiveness will not occur until the Project has been completed and RUS has confirmed that the Awardee has satisfied all other conditions specified in the Award.

6. *Loan Forgiveness Categories:* The following percentages shall be forgiven on Awards meeting the requirements outlined in Sections E and F of this notice. RUS will initially allocate a minimum of $300 million to each category.

(a) *Category I.* Up to 20 percent total loan forgiveness;

(b) *Category II.* Up to 40 percent total loan forgiveness if 50 percent or more of the population served by the proposed service area is located within the following areas:

(1) Energy Communities; or

(2) Distressed or Disadvantaged Communities.

(c) *Category III.* Up to 60 percent total loan forgiveness if:

(1) The proposed service area is located in Puerto Rico, United States Virgin Islands (USVI), Guam, American Samoa or other U.S. territories or Compact of Free Association (COFA) states; or

(2) The proposed service area consists of 60 percent or more of a Tribal area or serves an area that constitutes a SUTA; or

(3) The Project is owned by an Indian Tribe defined by the Federally Recognized Indian Tribe List Act of 1994 (Pub. L. 103–454; 108 Stat. 4791, 4792), including their wholly owned arms and instrumentalities, or an Alaska Native Corporation, including regional or village corporations, as defined under or established pursuant to the Alaska Native Claims Settlement Act (Pub. L. 104–42; 85 State. 688).

7. *Anticipated Award Date:* From September 2023 to December 2025.

8. *Performance Period:* Five (5) years from the date of environmental clearance, but no later than September 30, 2031.

9. *Use of other governmental funds:* The Agency will generally allow the Awardee to combine the incentives contained in this notice with other governmental benefits, provided such combinations are otherwise permitted by law or regulation.

10. *Renewal or Supplemental Awards:* None.

11. *Type of Assistance Instrument:* Loan Agreement.

C. Eligibility Information

1. *Eligible Applicants.* RUS will accept LOIs and Applications from entities as described below:

(a) For-profit organizations.

(b) State or local governments.

(c) Indian Tribes defined by the Federally Recognized Indian Tribe List Act of 1994 (Pub. L. 103–454; 108 Stat. 4791, 4792), including their wholly arms and instrumentalities.

(d) Alaska Native Corporations, including regional or village corporations as defined under or established pursuant to the Alaska Native Claims Settlement Act (Pub. L. 104–42; 85 State. 688)

(e) Nonprofits.

(f) Institutions of higher education.

(g) Community-based organizations, distribution electric cooperatives, and generation and transmission electric cooperatives.

LOIs and Applications from any entity in the above categories will be evaluated for funding. Where applicable and possible, applicants are encouraged to work with Distressed and Disadvantaged Communities, Energy Communities, Puerto Rico, the United States Virgin Islands (USVI), Guam, American Samoa or other U.S. territories or Compact of Free Association (COFA) states, tribal entities, and RPN communities.

2. *Cost Sharing and Matching.*

(a) *Project Loans.* Awards will finance up to 75% of the total capitalized costs of a Project. Awardees will be required to provide at least 25% of the Project's total capitalized cost in the form of cash or equity investments, which may not be derived from debt instruments.

(b) *System Loans.* PACE System Loans may cover 100% of the total costs of the Project.

3. *Other.*

(a) *Eligible Service Areas.*

(1) Electricity generated or stored from facilities shall be provided to ''rural and nonrural residents'' in eligible service areas.

(2) *Rural Percentage of the Service Territory.* The rural percentage will be calculated at the applicant's choosing by either:

(i) The population located in the Rural Areas of a service territory versus the total population of the entire service territory; or

(ii) Meters served in the Rural Areas of a service territory versus meters served in the entire service territory.

For the purpose of this notice, the minimum rural percentage by the chosen methodology must be at least 50 percent, unless waived by the Administrator based upon a showing that there exist social equity considerations, such as SUTA, significant energy burdens, severe economic needs, or substantial added benefits to rural consumers.

(3) *Rural Determination.* If the PACE Applicant is not a RUS Borrower, a rural determination will be conducted by RUS in order to:

(i) Identify the service territory where electricity from the facilities to be financed by PACE Award would be delivered and consumed; and

(ii) Further identify those areas within the service territory that are rural.

(b) *Project Eligibility.*

(1) Projects can be developed by eligible applicants developing new renewable power generation from RER and ESS for use by Off-Takers through a PPA or a financial guarantee that ensures Financial Feasibility.

(2) New facilities that generate electricity from an RER, including facilities that store electricity that support such assets. However, RUS will not approve facilities that violate the

terms of a PACE Applicant's existing wholesale power contract.

(3) New linear facilities, including microgrids, and equipment that are necessary to operate the Project including, but not limited to, transmission or distribution facilities that are needed to export, transmit, and deliver power from the generating facility to the Off-Taker.

(4) The upgrading of existing linear facilities and equipment that are necessary to operate the Project including, but not limited to, transmission or distribution facilities that are needed to export, transmit, and deliver power from the generating facility to the Off-Taker.

(5) The Project may include one or more RERs and/or ESSs.

(6) Facilities may be co-located to operate interconnectedly or independently or constructed at separate sites.

(7) RERs and ESSs must be installed so that the RER can provide energy and any ancillary services for resale to rural and nonrural residents located in eligible service areas.

(8) Applicants can request interconnection and other costs associated with being able to deliver the RER and/or the ESS to Off-Takers, including related microgrid investments. Successful applicants may also recover a portion of their capitalizable pre-application costs pursuant to 7 CFR part 1767 and this notice.

(9) Applicant may include in its loan Application the costs specified in 7 CFR 1710.106, including interest during construction (IDC) pursuant to 7 CFR 1710.106(a)(4).

D. Application and Submission Information

1. *Address to Request Application Package.* The Agency will finalize the on-line application window by notice in the **Federal Register** on or before June 30, 2023. The PACE Program Application Guide and copies of necessary forms and samples will become available at *https://www.rd.usda.gov/programs-services/electric-programs/powering-affordable-clean-energy-pace-program.* If you require alternative means of communication for program information (*e.g.,* Braille, large print, audiotape) please contact USDA's TARGET Center at (202) 720–2600 (voice and TDD) or the 711 Relay Service.

2. *Content and Form of Application Submission.*

(a) *Letter of Interest (LOI) Submission.* The LOI must include the information as listed below in this Section. LOI submitters should be aware that the final Application will require more information as included in Section D.2(b) of this notice.

(1) *LOI submitter's profile and point of contact information.*

(i) Legal name and status of the LOI submitter.

(ii) The LOI submitter's address and principal place of business.

(iii) The LOI submitter's tax identification number and its Unique Entity Identifier (UEI) number from the System for Award Management (SAM) registry.

(iv) Legal structure of LOI submitter (*e.g.,* cooperative, corporation, limited-liability company, State or local government entity, municipality, federally recognized Tribe). If the applicant is a non-governmental entity, a statement as to whether the entity is organized as a non-profit.

(v) If the LOI submitter is a State or local governmental entity, a certification that it can enter into contracts with the Federal government, incur debt, and provide security for such debt. Federal government entities are not eligible for financing.

(vi) Name and title of LOI submitter's manager and/or point of contact, which must include general contact information, as well as an email address to receive RUS' Invitation to Proceed.

(vii) The location of the Project and the applicable service area using a digital Shapefile. The applicable service area must demonstrate that the Project will provide economical clean energy to rural residents as outlined in Section C.3(a) of this notice.

(viii) The LOI submitter's net assets value.

(ix) A certification as to whether the LOI submitter over the last 10 years has been placed in receivership liquidation, has been under a workout agreement, has declared bankruptcy, or has had a decree or order issued for relief in any bankruptcy, insolvency, or other similar action.

(x) A statement as to whether the Project(s) will serve a SUTA area as defined in Section A.3 of this notice.

(2) *Financial Information.* A copy of the LOI submitter's balance sheet and income statements for the shorter of the last three years or the years the LOI submitter has been in operation. If the LOI submitter has no operating history, the LOI submitter must provide RUS with information RUS deems necessary to evaluate the financial strength of the LOI submitter. The LOI submitter must also provide the balance sheet and income statements for the last three years of any entity or entities providing equity or security for the loan, with an explanation of the legal relationship to the LOI submitter.

(3) *Technical Description of the Project.* A technical description of the Project, which shall not exceed 1,500 words, and must include the following:

(i) Type of loan being requested, Project Loan or System Loan. See Section B.5 of this notice.

(ii) A description of each RER and ESS being requested for PACE financing including Project name, location, type, size, and renewable energy units generated and saved.

(iii) Verification that the Project(s) will be designed, constructed, and operated based on Commercially Available Technology.

(iv) For each Project, the estimated dates to start construction and to achieve commercial operation.

(v) The estimated total capital cost of each Project and the amount of Award funds being requested to finance each Project.

(vi) Proposed financial structure of the owners, equity investors and other participants, which shall include estimated sources and uses of all funds.

(vii) If applicable, a description and status of any PPA that will be used to sell and deliver the electrical output of the Project(s) to Off-Takers.

(viii) If applicable, a description of any existing power sales contracts, such as wholesale power contracts, between Off-Takers and its members.

(ix) Status of, and estimated timelines to complete, if known, any applicable Federal, State, or local permitting or environmental review processes.

(x) *Ratepayer and Community Benefit.* A brief discussion from the LOI submitter that if it is invited to submit an Application, it will demonstrate in its Application how it will pass on a portion of the savings from the loan forgiveness to the Off-Taker as described in Section B.6 of this notice and that the LOI submitter will provide the required information from Section D.2(b)(19) for the Community Benefit Plan.

(xi) *Prevailing wage.* Pursuant to 7 U.S.C. 8103(f), a certification that, pursuant to 7 U.S.C. 8103(f), the LOI submitter will comply with the provisions of the Davis-Bacon Act so that any laborers and mechanics employed on the Project or any contractor or subcontractor in: (A) the construction of such facility, and (B) with respect to any taxable year, for any portion of such taxable year the alteration or repair of such facility, shall be paid wages at rates not less than the prevailing rates for construction, alteration, or repair of a similar character in the locality in which such facility is located as most recently

determined by the Secretary of Labor, in accordance with subchapter IV of chapter 31 of title 40, United States Code.

(xii) *Loan Forgiveness Level.* A statement as to what level of loan forgiveness outlined in Section B.6 of the notice that the LOI submitter believes it is eligible and the reason(s) why it believes it is eligible for that specific level of loan forgiveness.

If the LOI submitter cannot provide any of the information or documents listed above, it must notify RUS prior to submitting an Application.

(b) *Application Submission.* An LOI submitter that receives an Invitation to Proceed must submit Application packages containing the information and documents required in 7 CFR 1710.501, as well as the following information and documentation:

(1) *Loan Application letter.* The letter may be signed by any authorized representative of the PACE Applicant; however, the authorization must also be submitted with the Application.

(2) *Articles of incorporation and bylaws and other governing and organizational documents.* The PACE Applicant must provide the articles of incorporation, bylaws, and other organizational documents currently in effect. PACE Applicants that are RUS Borrowers may comply with this requirement by notifying in writing to RUS that there are no material changes to the documents already on file with RUS. Other governmental applicants must only provide evidence of their ability to enter into debt obligations.

(3) *Environmental and Historic Preservation Requirements.* If the PACE Applicant has not received written notice from RUS that the Project environmental review process is formally concluded as provided in 7 CFR 1970.11, it must submit documents that establish that a review is in progress and no ground disturbance activities have started prior to receiving notice that the Environmental and Historic Preservation review requirements have been completed. This requirement requires the PACE Applicant to include a certification that construction has not started and that it will not start prior to obtaining written notice from RUS. The PACE Applicant must further state the type of environmental review document it believes needs to be prepared in accordance with 7 CFR part 1970 (*e.g.,* a Categorical Exclusion with an Environmental Report, an Environmental Assessment, or Environmental Impact Statement in accordance with subparts B, C, or D, respectively). The PACE Applicant must provide a description of any potential environmental controversy or extraordinary circumstances, and the estimated timelines for completing the environmental process. PACE Applicants are strongly advised that commencing construction prior to environmental or historic preservation clearance could make a Project ineligible for RUS financing, regardless of a Project's place in the queue.

(4) *Financial Forecast.* In order to demonstrate that the loan is feasible as required in 7 CFR 1710.112, the PACE Applicant must submit a financial forecast. For System Loans, the financial forecast must cover at least 10 years from the commercial operating date of the Project to be financed, must demonstrate that the PACE Applicant's operation is economically viable and that the proposed loan is financially feasible. RUS may request projections for a longer period of time or additional information, if RUS deems it necessary based on the financial structure of the PACE Applicant. The PACE Applicant must submit the financial forecast in the form prescribed by RUS in the Invitation to Proceed.

(5) *PPA.* If the PACE Applicant proposes to sell power generated from the Project to an Off-Taker under a PPA, the PACE Applicant must provide a draft copy of the PPA with the Application, which must be structured to allow two different rate schedules; one for the case without loan forgiveness and the other for the case with loan forgiveness. Because the PPA is essentially the mechanism by which consumers will benefit from the PACE program, all draft PPAs must be approved by RUS prior to being executed. RUS approval of the PACE Application is predicated upon an executed PPA that has been approved by the Agency.

(6) *Power Resources Owned, Co-owned or Leased.* If applicable, provide a discussion or table of the existing power resources available to the applicant that includes generation facilities owned, co-owned or leased. The information provided should include: name of plant and unit, ownership interest (%), type of unit and fuel used, net peak capacity, and in-service date.

(7) *Power Purchase Contracts.* If applicable, provide a discussion of the applicant's power purchase contracts (with terms greater than two years) that describes the capacity and energy resources purchased. The information should include: type of contract (take-or pay, unit power purchase, etc.), parties to the contract, amount (capacity and energy); and term and expiration date.

(8) *Power Sales Contracts.* A description of any existing power sales contracts, such as wholesale power contracts, between an Off-Taker and its members must be provided that includes the type of agreements (*e.g.,* all or partial requirements), the initial execution dates, and the dates the agreements expire. The PACE Applicant must provide copies of the agreements if requested by the Agency.

(9) *Engineering Report.* A signed final engineering report or final engineering and power cost study must be provided with the Application, or soon thereafter. The report must describe the purpose, design, costs, construction, and operation of the Project(s). A draft engineering report must be submitted for RUS approval prior to it being finalized and signed. An approved engineering report is a prerequisite to the obligation of PACE funds; however, the PACE borrower may amend the engineering report with RUS' written approval. The finalized engineering report must be signed or approved by licensed professional engineer.

(10) *Project Contracting.* The PACE Applicant must provide a list of all engineering, procurement, and construction contracts it intends to use on the Project(s), with a brief description and cost estimate of each contract. At the Agency's discretion, any contracts selected by the Agency for review and approval must be submitted within the period of time requested by the Agency. In no event will Award funds be disbursed prior to the selected Project contracts receiving Agency approval and any other necessary approvals.

(11) *Interconnection Agreements.* If an interconnection agreement is needed, draft agreements required to interconnect an RER, ESS, or related microgrid system to a distribution or transmission network must be included with the Application. These agreements must be approved by the Agency before the Award funds are disbursed.

(12) *System Impact Studies.* The status and summary of any related system impact studies as they may pertain to the interconnection of the Project with a distribution or transmission network must be provided with the Application. System impact studies must be conducted, as applicable, to include load flow studies, short circuit analysis, system stability analysis, and conclusions (*e.g.,* identify voltage, overload, stability problems and proposed actions or contingencies; single contingency analysis of proposed facilities; transmission constraints; and system improvements needed). The nature of any required system upgrades

and associated costs to be incurred by the Awardee, Off-Taker, or other entity must be identified. The Agency may request a copy of any system impact studies or links to review such studies.

(13) *Transmission Service Agreements.* Transmission service agreements required to export, transmit or deliver the power from the Project to the Off-Taker, if any, must be included with the Application. These agreements must receive Agency approval before Award funds are disbursed.

(14) *Other Major Agreements.* The PACE Applicant must provide a list and a brief description of all other major agreements that will need to be executed for the Project. Such agreements, if applicable, include, but are not limited to O&M arrangements, joint ownership arrangements, fuel management, and fuel supply and transportation. Agreements selected for approval by the Agency should be submitted within the period of time requested by the Agency. RUS will not approve the PACE Application until all agreements requested for review have been approved by the Agency.

(15) *Meteorological Data and Studies.* RERs such as solar and wind Projects must be supported with meteorological data and studies to determine the expected energy generation of the facility during the initial year of operation. The PACE Applicant must identify the amount and basis of any annual degradation in energy output of the RERs.

(16) *Fuel and Fuel Transportation Strategies.* If applicable to the Project, the PACE Applicant must describe the fuel and fuel transportation strategies of the Project and show that the fuel supply for the life of the Project is adequate. Fuel supply contracts and fuel transportation contracts must be identified, including the term of each contract. Copies of the fuel contracts or arrangements must be provided if requested by the Agency.

(17) *Sources and Uses of Water.* The PACE Applicant must identify the uses and source of water for the Project, as well as evidence that the water supply will be adequate to meet both daily demands and demands for the life of the Project. If requested by the Agency, the PACE Applicant must provide copies of any agreements or arrangements that would be used to purchase or receive water used and consumed by the Project and the applicable water balance diagram of the facilities.

(18) *Real Estate Matters.* If the PACE Applicant is leasing the real estate upon which it will build and operate the Project, the PACE Applicant must submit an executed copy of the lease agreement with the Application. Lease agreements must contain, or be amended to contain, a provision that allows the PACE Applicant to collaterally assign the lease to RUS as security for the loan. Further, to the extent that the lessor under any lease with the PACE Applicant has executed a mortgage or deed of trust with respect to the real estate to another party, that party must execute an attornment and non-disturbance agreement in favor of the PACE Applicant that will allow the PACE Applicant to continue to lease the real property and operate the Project in the event of the lessor's default under the mortgage or deed of trust. The PACE Applicant must submit any attornment and non-disturbance agreements to RUS with its PACE Application.

(19) *Community Benefit Plan.* The PACE Applicant must submit a Community Benefit Plan, which should be implemented within the first year of receiving Award funds, but which is expected to be provided beyond the Project itself, including, but not limited to:

(i) Investments in the American workforce such as local worker retention, retraining and job creation;

(ii) The launch or expansion of systemic or consumer-based energy efficiency and carbon reduction measures such as providing on-bill financing or Pay as You Save programs to improve the energy efficiency and beneficial electrification for consumers;

(iii) Land use agricultural integration that demonstrates ways for traditional farming and ranching to benefit from clean energy Projects; and

(iv) Diversity, equity, inclusion, and accessibility goals set forth in the Justice40 Initiative.

(20) *Tribal Government Resolution of Consent.* A certification from the appropriate Tribal official is required if the Project, or any part of it, will be sited on Tribal land where a Tribal government has regulatory authority. Any non-Tribal PACE Applicant that fails to provide a certification to provide service on the Tribal lands identified in the proposed Project or the proposed service area will not be considered for funding.

(21) *Estimated Costs.* The applicant must include in its loan Application a breakdown of the estimated costs listed in Section C.3(b)(9) of this notice for which it intends to seek reimbursement.

3. *System for Award Management and Unique Entity Identifier.*

(a) At the time of Application, each PACE Applicant must have an active registration in the System for Award Management (SAM) before submitting its Application in accordance with 2 CFR part 25. In order to register in SAM, entities will be required to obtain a Unique Entity Identifier (UEI). Instructions for obtaining the UEI are available at *https://sam.gov/content/entity-registration.*

(b) PACE Applicants must maintain an active SAM registration, with current, accurate and complete information, at all times during which it has an active Federal award or an Application under consideration by a Federal awarding agency.

(c) PACE Applicants must ensure they complete the Financial Assistance General Certifications and Representations in SAM.

(d) PACE Applicants must provide a valid UEI in its Application, unless determined exempt under 2 CFR 25.110.

(e) The Agency will not make an Award until the PACE Applicant has complied with all SAM requirements. If a PACE Applicant has not fully complied with the requirements by the time the Agency is ready to make an Award, the Agency may determine that the PACE Applicant is not qualified to receive a Federal Award and use that determination as a basis for making a Federal Award to another PACE Applicant.

4. *Submission Dates and Times.*

(a) *LOI Submissions.* LOIs can be submitted beginning at 11:59 a.m. Eastern Time (ET) on June 30, 2023 until 11:59 a.m. ET on September 29, 2023.

(b) *Application Submissions.* A LOI submitter that receives an Invitation to Proceed will have 60 days, or a time agreeable to the Agency, to complete and submit its loan Application. If the deadline to submit the Application falls on Saturday, Sunday, or a Federal holiday, the Application is due the next business day. The Administrator may grant an extension of time to complete the documentation required for an Application if, in the Administrator's sole judgment, extraordinary circumstances prevented the PACE Applicant from completing the Application within the timeframe herein stipulated. In extending an Invitation to Proceed to a LOI submitter in the queue, RUS reserves the right to meet overall RUS program objectives and therefore, may notify the PACE Applicant that the amount of financing to be Awarded is below the level sought by the PACE Applicant.

(c) *General.* RUS reserves the right to ask PACE Applicants for clarifying information on, or additional information related to, the LOI or Application.

5. *Intergovernmental Review.* Intergovernmental Review under

Executive Order 12372 is not required in this program.

6. *Funding Restrictions.*

(a) Entities that plan to submit or have submitted Applications under the RUS Empowering Rural America (New ERA) Program may not apply for the same Project under the PACE Program. Failure to follow this limitation will cause the PACE Applicant to be disqualified from all potential Awards.

(b) Only Projects where construction began after August 16, 2022, the effective date of the IRA, will be eligible for funding under PACE Program.

(c) Funding will not be provided for merchant power Projects or Projects where a non-utility entity is generating power for its own use.

(d) Funding will not be provided for the purchase of any existing RER or ESS.

(e) There are no Application or origination fees for loans under the PACE Program.

(f) RUS will only finance Projects that utilize Commercially Available Technology under this notice.

(g) PACE Applicants can request interconnection and other costs associated with being able to deliver the RER and/or the ESS to Off-Takers.

7. *Other Submission Requirements.*

(a) An entity may only submit one LOI. RUS will not accept paper LOIs. A sample LOI and additional information is available at *https://www.rd.usda.gov/programs-services/electric-programs/powering-affordable-clean-energy-pace-program.*

(b) Each LOI submitter may only submit one Application, upon receiving a RUS Invitation to Proceed.

(c) Each PACE Applicant may only receive one Award.

(d) An Invitation to Proceed or RUS' approval of a PACE Application does not constitute approval of any agreement or document that the PACE Applicant must provide to RUS for RUS' approval as outlined in this notice or in the applicable PACE loan agreement.

(e) A PACE Applicant must, after submitting a LOI or loan Application, promptly notify RUS of any changes in its circumstances that materially affect the information contained in the loan Application.

(f) Applicants (''co-applicants'') may submit a joint/consolidated LOI or a Joint Application for consideration (collectively the ''Joint LOI'' or ''Joint Application''). If a joint LOI contains two or more proposed Projects, the Agency may evaluate each proposed Project separately as to whether to provide an Invitation to Proceed concerning each proposed Project. The Agency may also disaggregate its review of the technical and Financial Feasibility of the individual Projects contained in a joint LOI or a joint Application. Further, the Agency may require co-applicants to accept separate contractual and financial commitments relating to the Project or Projects contained in the joint Application.

E. Application Review Information

1. *Criteria.*

(a) *LOI.* RUS will process and evaluate complete LOI on a rolling basis in the order they are received. In reviewing LOIs, RUS will assess the following:

(1) *Applicant eligibility.* The applicant's eligibility to participate in the PACE Program.

(2) *Project eligibility.* The eligibility of the proposed Project under the terms of Section 22001 of the IRA and the technical feasibility of the proposed Project.

(3) *Geographic Diversity.* The Administrator may consider geographic diversity in reviewing and evaluating LOIs.

(4) *Financial status.* The financial status of the applicant to determine the applicant's likelihood to successfully secure and repay the PACE loan.

(6) *Allocation of Funds Among Categories.* The amount of funding available in the category due to a disproportionate number of LOI in that category and whether RUS will be able to reallocate funding from another category listed in Section B.6 of this notice.

(b) *Application.* RUS will evaluate and review each Application based on the criteria provided in 7 CFR part 1710 subpart D and will assess the following:

(1) *Financial coverage ratios.* The Administrator may set financial coverage ratios based on the risk profile of the PACE Applicant and specific loan terms. Those financial ratios will be included in the PACE borrower's loan documents with RUS. RUS Borrowers will be subject to their current debt service coverage ratios in their current loan documents, unless notified otherwise.

(2) *Financial Equity Requirements.* As noted in Section C.2 of this notice, RUS will require the Awardee to provide at least 25% equity in the Project for PACE Project loans. However, the Administrator may consider requests to waive the 25% financial equity requirement for PACE Awards where the Project will serve areas covered under SUTA. System Loans that provided RUS with a perfected senior lien on all assets of the PACE Applicant will not have an additional equity requirement. The required financial equity position will be set forth in the Commitment Letter and the loan documents as a condition to the PACE loan. RUS may consider allowing the Awardee to meet the financial equity requirements by utilizing any appliable direct payment or tax credit relating to the Project as provided in Internal Revenue Code of 1986 and its implementing regulations. If the Administrator allows a PACE Applicant to meet the financial equity requirement by utilizing applicable tax credits or direct payments relating to the Project, the Agency may require additional security or credit support from the PACE Applicant pending the PACE Applicant's receipt of the tax credit or direct payment.

(3) *Community Benefit Plan.*

(4) *Loan forgiveness minimum requirements.*

(i) *Ratepayer Benefit:* Loan forgiveness must provide demonstrable benefits to rate payers located in the service area. The PACE Applicant must demonstrate in its LOI that the consumer benefits and financial benefits resulting from the forgivable portion of the loan will be shared between the Awardee and the Off-Taker. This must be shown through a long-range financial forecast scenario that establishes that the revenue per kilowatt hour (KWh) the PACE Applicant will receive from the sale of the power to the Off-Taker would have been higher but for the loan forgiveness. Additionally, a net present value (NPV) calculation should be performed to demonstrate the financial benefit to the rate payer with the addition of the loan forgiveness versus business as usual without loan forgiveness.

(ii) *Technical Feasibility and Commercially Available Technology.* RUS must determine that the Project is technically feasible and confirm that the Project uses a Commercially Available Technology.

(iii) *Financially Feasible.* The proposal must be financially feasible and adequately securable, as outlined in 7 CFR 1710.112.

2. *Review and Selection Process.*

(a) *LOI.* RUS will consider only complete LOIs as they are received. LOIs will be accepted on a rolling basis and evaluated as received based on the criteria described in Section E.1(a) of this notice. Only LOIs selected to receive an Invitation to Proceed will be able to proceed with the Application.

(b) *Application.* LOI submitters that receive an Invitation to Proceed will have 60 days, or a time agreeable to the Agency, from the date RUS sends the Invitation to Proceed to submit an Application to the Agency. A General Field Representative (GFR) will be

assigned to assist the PACE Applicant during this part of the Application process. RUS will process Applications in the order they are received.

All Applications will be reviewed based on the criteria provided in Section E.1(b) of this notice. RUS will make Awards under the PACE Program based on Applications that meet the requirements contained in this notice. The Agency reserves the right to offer the PACE Applicant less than the loan funding and loan forgiveness requested.

F. Federal Award Administration Information

1. *Loan Terms and Conditions.* A successful PACE Applicant will receive a Commitment Letter from the Administrator notifying of the following: total Award amount approved by RUS; the amount of the loan that will be forgiven; any additional controls on its financial, investment, operational and managerial activities; acceptable security arrangements; and such other conditions deemed necessary by the Administrator to adequately secure the Government's interest and ensure repayment. Upon receipt of the acceptance of the Award offer by the PACE Awardee, RUS will begin to prepare the loan documents. Upon completion of the loan documents, RUS will forward the loan documents to the PACE Applicant.

Receipt of a Commitment Letter from the Administrator does not authorize the PACE Awardee to commence performance under the Award. All RUS requirements and loan conditions specified in the Commitment Letter must be met before the Awardee may commence construction on the Project and before RUS will disperse the proceeds of the Award, including but not limited to the Awardee receiving notice that the Environmental and Historic Preservation requirements have been completed. RUS will notify the Awardee when it is authorized to commence construction of the Projects.

(a) *Maturity of a PACE Loan.* The maturity of a PACE loan will be the lesser of:

(1) The expected useful life of the Project,

(2) The term of the PPA (if required for execution between the PACE Applicant and the Off-Taker),

(3) The term of the lease for the land that the Project will occupy (if such land is not owned by the PACE Applicant),

(4) The expiration dates of power sales contracts between the PACE Applicant and its members should the PACE Applicant provide the power supply needs of the members under such power sales contracts,

(5) The loan term requested by the PACE Applicant, or

(6) 35 years.

(b) *Waiver and Modification of Term and Conditions.* The Administrator reserves the right to modify or waive certain requirements if:

(1) The Administrator believes such modifications or waivers are in the best interest of the government,

(2) The Administrator has determined that the loan will be repaid on or before the maturity date, and

(3) The security is adequate.

The Awardee may be required to establish and maintain reserves sufficient for timely loan payments, emergency maintenance, extensions to the facilities, and replacement of short-lived assets.

(c) *Interest rate.* Loans made under PACE Program will bear interest equal to the municipal rate as provided in Section 317(c) of the RE Act, and as further described in the first sentence of 7 CFR 1714.4(a) and 7 CFR 1714.5(a)–(c). Municipal rates can be found at *https://www.rd.usda.gov/page/rural-utilities-loan-interest-rates.* Note that because there is no interest rate cap for the PACE Program, the third sentence of 7 CFR 1714.4(a) and 7 CFR 1714.5(d) shall not apply.

(d) *Prepayment.* Prepayment of PACE loans will be governed by Sections 305(c) and 306B of the RE Act and the provisions of 7 CFR part 1714, subpart A and 7 CFR 1786, subpart F that relate to municipal rate loans. If the Awardee prepays a PACE loan, its obligations under the Community Benefit Plan will continue for a period equal to the shorter of: (1) the original term of the Award, or (2) five years from the date the Project was placed in service.

(e) *Repayment.* The repayment of each advance to the PACE borrower must be amortized over the term on the PACE loan, such that the Awardee will make equal monthly payments that will pay all principal and interest on such advance no later than the maturity date.

(f) *Financial Ratios.* Financial ratios shall be determined as set forth in Section E.1(b)(1) of this notice.

(g) *Collateral.* Project Loans will be secured through a senior security interest on the Project's assets and the revenues generated from the Project's assets. System Loans will be secured by assets of the Awardee. For RUS Borrowers, the Agency may rely, at its sole discretion, on existing security arrangements with RUS if it is determined that the government has adequate collateral. When an Awardee is unable by reason of preexisting encumbrances, or otherwise, to furnish a senior perfected security interest on its entire system, the Administrator may accept other forms of security, such as a guarantee from the appropriate party, an irrevocable letter of credit, or revenue pledges, if the Administrator determines that such credit support is reasonably adequate and acceptable.

(h) *Opinion of counsel.* An opinion of counsel is required at closing and must be acceptable to the Administrator, opining, *inter alia,* that the Awardee is properly organized and has the authority to enter into the Award and that RUS has a first priority, senior lien on the required collateral, unless other collateral arrangements have been agreed to with the Agency.

(i) *Cybersecurity.* An Awardee must certify that it has adopted and implemented a cybersecurity risk mitigation and remediation plan that is consistent with prudent utility practice. Additionally, the Awardee must certify that such cybersecurity risk mitigation and remediation plan is in effect at the time of each advance request.

(j) *General Provisions.* Unless otherwise stated in this notice or in the loan documents, a PACE loan will be governed by the municipal rate loan provisions contained in 7 CFR parts 1710, 1714, and 1721.

(k) *Funding Disbursements and Restriction.*

(1) *General.* RUS will disburse funds to the Awardee in accordance with the terms of the Award documents. All Award funds will be disbursed as a reimbursement for eligible program costs after the Project is complete, and its performance verified in a manner that is sufficient to RUS. RUS reserves the right to consider requests to disburse funds prior to completion of the Project by Awardees with System Loans. Pursuant to Section 22001 of the IRA, the Award agreements must contain a provision that requires the advance of all loan funds on or before September 30, 2031. All undisbursed funds as of close of business on September 30, 2031, will automatically be rescinded; however, the Agency will set a last day for advance in the Award agreements well in advance of the statutory limit.

(2) *Advances and Loan Forgiveness Information.* RUS will disburse Award funds to the Awardee after the Awardee has satisfied all conditions of its Award agreement with respect to the release of funds. This may include, but not be limited to, certain milestone conditions being achieved during construction to the satisfaction of RUS or the results of any required performance testing of the Project that RUS has reviewed and determined to be acceptable. RUS will

forgive the portion of the loan specified in the Award agreement at the time RUS disburses the Award proceeds if the Awardee demonstrates to RUS' satisfaction that the Project is functioning as represented in the PACE Application. The maximum loan forgiveness amount for each loan forgiveness category is described in Section B.6 of this notice.

If, however, RUS determines after having forgiven a portion of the loan that the Awardee is no longer in compliance with the terms of the Award agreement, RUS will require the Awardee to repay the entire PACE loan in full.

(3) *Signage.* The Awardee is encouraged to display USDA standard infrastructure investment signage, available for download from the Agency, during construction of the Project. Expenditures for such signage shall be a permitted eligible cost of the Project.

2. *Administrative and National Policy Requirements.* The items listed in this notice implement the appropriate administrative and national policy requirements, which include but are not limited to:

(a) Execution of a PACE loan agreement and related loan documents;

(b) Compliance with policies, guidance, and requirements as described in Section A.2 of this notice, and any successor regulations.

(c) Except as provided in the notice and in the executed loan agreements, all other generally applicable regulations contained in 7 CFR parts 1700–1730, 1767, 1773, and 1787, and 7 CFR part 1970 will apply to PACE loans, as well as relevant Bulletins published by the RUS Electric Program.

As required by 7 U.S.C. 8103(f), the Projects financed through the PACE Program will be subject to the Wage Rate Requirements (formerly Davis-Bacon Act) prevailing wage requirements contained in Subchapter IV of Chapter 31 of Title 40 of the United States Code and the Department of Labor's implementing regulations contained in 29 CFR parts 1, 3, and 5.

(d) Pursuant to the Defense Production Act of 1950 and the Foreign Investment Risk Review Modernization Act of 2018, RUS will require PACE Applicants to disclose any foreign person or foreign entity that has an ownership, management rights, or voting interesting in the PACE Applicant or the Project.

3. *Reporting.*

(a) *Performance Reporting.* RUS will establish periodic reporting requirements that will be outlined in the Award documents.

(b) *Accounting Requirements.* Awardees must comply with Accounting Principles Generally Accepted in the United States, (GAAP), as well as compliance with the requirements of the applicable regulations: 2 CFR part 200 subpart E Cost Principles, 48 CFR 31 Federal Acquisition Regulations Contract Cost Principles, and the system of accounting prescribed by 7 CFR part 1767 Accounting Requirements for RUS Electric Borrowers.

(c) *Audit Requirements.* Awardees will be required to prepare and furnish to RUS audits as follows:

(1) Awardees that are Non-Federal Entities shall provide RUS with an audit pursuant to 2 CFR part 200, subpart F, Audit Requirements. The Non-Federal Entity Awardee must follow subsection 2 CFR 200.502 in determining federal awards expended.

All RUS loans impose an ongoing compliance requirement for the purpose of determining federal awards expended during a fiscal year. In addition, the Awardee must include the value of new federal loans made along with any grant expenditures from all federal sources during the Awardee's fiscal year. Therefore, the audit submission requirement for this program begins in the Awardee's fiscal year that the loan is made and thereafter, based on the balance of federal loan(s) at the beginning of the audit period. All required audits must be submitted within the earlier of:

(i) 30 calendar days after receipt of the auditor's report; or

(ii) nine months after the end of the Awardee's audit period.

(2) For all other entities, Awardees shall provide RUS with an audit within 120 days after the as of audit date in accordance with 7 CFR part 1773. Note that with respect to advances that contain loan funds, the audit is required after an advance has been made, and, thereafter, from the close of each subsequent fiscal year until the loan is repaid in full. While an audit is required, Awardees must also submit a report on compliance and internal controls over financial reporting, as well as a report on compliance with aspects of contractual agreements and regulatory requirements.

(d) *Monitoring Requirements.* Awardees must comply with all reasonable RUS requests to support ongoing monitoring efforts. Awardees must afford RUS, through their representatives, a reasonable opportunity, at all times during business hours and upon prior notice, to have access to and the right to inspect any or all books, records, accounts, invoices, contracts, leases, payrolls, timesheets, cancelled checks, statements, and other documents, electronic or paper of every kind belonging to or in possession of the Awardee or in any way pertaining to its property or business, including its parents, affiliates, and subsidiaries, if any, and to make copies or extracts therefrom. Failure to comply with reasonable RUS requests could result in a termination of the Award agreement.

G. Federal Awarding Agency Contact(s)

For general questions about this announcement, please contact the point of contact listed in the **FOR FURTHER INFORMATION CONTACT** Section of this notice.

H. Build America, Buy America Requirements

Infrastructure Project Awards under this announcement must meet the following domestic preference requirements:

1. *Funding to Non-Federal Entities.* Awardees that are Non-Federal Entities shall be governed by the requirements of Section 70914 of the Build America, Buy America Act (BABAA) within the Infrastructure Investment and Jobs Act (IIJA), and its implementing regulations. The Act requires the following Buy America preference:

(a) All iron and steel used in the Project are produced in the United States. This means all manufacturing processes, from the initial melting stage through the application of coatings, occurred in the United States.

(b) All manufactured products used in the Project are produced in the United States. This means the manufactured product was manufactured in the United States, and the cost of the components of the manufactured product that are mined, produced, or manufactured in the United States is greater than 55 percent of the total cost of all components of the manufactured product, unless another standard for determining the minimum amount of domestic content of the manufactured product has been established under applicable law or regulation.

(c) All construction materials (excludes cement and cementitious materials, aggregates such as stone, sand, or gravel, or aggregate binding agents or additives) are manufactured in the United States. This means that all manufacturing processes for the construction material occurred in the United States.

BABAA only applies to articles, materials, and supplies that are consumed in, incorporated into, or affixed to an infrastructure project. As such, it does not apply to tools,

equipment, and supplies, such as temporary scaffolding, brought to the construction site and removed at or before the completion of the infrastructure project. Nor does BABAA apply to equipment and furnishings, such as movable chairs, desks, and portable computer equipment, that are used at or within the finished infrastructure project. Any requests for waiver of these requirements must be submitted pursuant to USDA's guidance available online at *https://www.usda.gov/ocfo/federal-financial-assistance-policy/USDABuyAmericaWaiver.*

2. *Funding to all other entities.* All other Awardees shall be governed by the Agency's Buy American requirement at 7 CFR part 1787. For purposes of BABAA compliance, for-profit organizations are not considered Non-Federal Entities. However, this does not alter independent statutory authorities that USDA may have to include domestic content requirements in awards of Federal financial assistance issued to for-profit organizations. Any requests for waiver of these requirements must be submitted pursuant to those regulations.

I. Other Information

1. *Administrative Procedure Act Statement.* This notice is being issued without advance rulemaking or public comment. The Administrative Procedure Act of 1946 (APA), as amended (5 U.S.C. 553), has several exemptions to rulemaking requirements. Among them is an exception for a matter relating to ''loans, grants, benefits, or contracts.''

2. *Congressional Review Act Statement.* Pursuant to Subtitle E of the Small Business Regulatory Enforcement Fairness Act of 1996 (also known as the Congressional Review Act or CRA); 5 U.S.C. 801 *et seq.,* the Office of Information and Regulatory Affairs in the Office of Management and Budget designated this action as a major rule as defined by 5 U.S.C. 804(2), because it is likely to result in an annual effect on the economy of $100,000,000 or more. Accordingly, there is a 60-day delay in the effective date of this action, and the Agency will not take action on LOIs until the later of 60 days after notification to Congress or July 17, 2023. The 60-day delay required by the CRA is not expected to have a material impact upon the administration and/or implementation of this program.

3. *Paperwork Reduction Act.* In accordance with the Paperwork Reduction Act of 1995 (44 U.S.C. chapter 35), USDA requested that the Office of Management and Budget (OMB) conduct an emergency review of a new information collection that contains the Information Collection and Recordkeeping requirements contained in this notice.

In addition to the emergency clearance, the regular clearance process is hereby being initiated to provide the public with the opportunity to comment under a full comment period, as the Agency intends to request regular approval from OMB for this information collection. Comments from the public on new, proposed, revised, and continuing collections of information help the Agency assess the impact of its information collection requirements and minimize the public's reporting burden. Comments may be submitted regarding this information collection through the Federal eRulemaking Portal at *https://www.regulations.gov*. In the ''Search for dockets and documents on agency actions'' box, type in the DOCKET # from this notice to submit or view public comments and to view supporting and related materials available electronically. Information on using *Regulations.gov,* including instructions for accessing documents, submitting comments, and viewing the docket after the close of the comment period, is available through the site's ''FAQ'' link. Comments on this information collection must be received by July 17, 2023.

Title: Powering Affordable Clean Energy (PACE) Program.

OMB Control Number: 0572–NEW.

The following estimates are based on the average over the first 3 years the program is in place.

Estimate of Burden: Public reporting burden for this collection of information is estimated to average 10.632 hours per response.

Respondents: Private entities, governmental entities, nonprofits, Indian Tribes, district organizations, institutions of higher education.

Estimated Number of Respondents: 200.

Estimated Number of Responses per Respondent: 8.47.

Estimated Number of Responses: 1,694.

Estimated Total Annual Burden (hours) on Respondents: 18,010.

Copies of this information collection may be obtained from Katherine Anne Mathis, Management Analyst, Regulatory Division, RD Innovation Center, telephone: 202–713–7565; email: *katherine.mathis@usda.gov.* All responses to this information collection and recordkeeping notice will be summarized and included in the request for OMB approval. All comments will also become a matter of public record.

4. *National Environmental Policy Act.* All recipients under this notice are subject to the requirements of 7 CFR part 1970.

5. *Federal Funding Accountability and Transparency Act.* All applicants, in accordance with 2 CFR part 25, must be registered in SAM and have a UEI number as stated in Section D.3 of this notice. All recipients of Federal financial assistance are required to report information about first-tier sub-awards and executive total compensation in accordance with 2 CFR part 170.

6. *Wage Rate Requirements.* As provided in 7 U.S.C. 8103(f) all Projects funded under the PACE Program, as a condition of receiving a grant or loan under this Section, an eligible entity shall ensure that all laborers and mechanics employed by contractors or subcontractors in the performance of construction work financed, in whole or in part, with the grant or loan, as the case may be, shall be paid wages at rates not less than those prevailing on similar construction in the locality, as determined by the Secretary of Labor in accordance with 40 U.S.C. 31, Sections 3141 through 3144, 3146, and 3147.

7. *Civil Rights Act.* All grants made under this notice are subject to Title VI of the Civil Rights Act of 1964 as required by the USDA in 7 CFR part 15, subpart A (eCFR:: 7 CFR part 15 Subpart A—Nondiscrimination in Federally-Assisted Programs of the Department of Agriculture—Effectuation of Title VI of the Civil Rights Act of 1964) and Section 504 of the Rehabilitation Act of 1973, Title VIII of the Civil Rights Act of 1968, Title IX, Executive Order 13166 (Limited English Proficiency), Executive Order 11246, and the Equal Credit Opportunity Act of 1974.

8. *Nondiscrimination Statement.* In accordance with Federal civil rights laws and the USDA civil rights regulations and policies, the USDA, its Mission Areas, agencies, staff offices, employees, and institutions participating in or administering USDA programs are prohibited from discriminating based on race, color, national origin, religion, sex, gender identity (including gender expression), sexual orientation, disability, age, marital status, family/parental status, income derived from a public assistance program, political beliefs, or reprisal or retaliation for prior civil rights activity, in any program or activity conducted or funded by USDA (not all bases apply to all programs). Remedies and complaint filing deadlines vary by program or incident.

Program information may be made available in languages other than

English. Persons with disabilities who require alternative means of communication to obtain program information (*e.g.,* Braille, large print, audiotape, American Sign Language) should contact the responsible Mission Area, agency, or staff office; the USDA TARGET Center at (202) 720–2600 (voice and TTY); or the 711 Relay Service.

To file a program discrimination complaint, a complainant should complete a Form AD–3027, USDA Program Discrimination Complaint Form, which can be obtained online at *https://www.usda.gov/sites/default/files/documents/ad-3027.pdf* from any USDA office, by calling (866) 632–9992, or by writing a letter addressed to USDA. The letter must contain the complainant's name, address, telephone number, and a written description of the alleged discriminatory action in sufficient detail to inform the Assistant Secretary for Civil Rights (ASCR) about the nature and date of an alleged civil rights violation. The completed AD–3027 form or letter must be submitted to USDA by:

(1) *Mail:* U.S. Department of Agriculture, Office of the Assistant Secretary for Civil Rights, 1400 Independence Avenue SW, Washington, DC 20250–9410; or

(2) *Fax:* (833) 256–1665 or (202) 690–7442; or

(3) *Email: program.intake@usda.gov.*

USDA is an equal opportunity provider, employer, and lender.

Andrew Berke,

Administrator, Rural Utilities Service, USDA Rural Development.

[FR Doc. 2023–10388 Filed 5–15–23; 8:45 am]

BILLING CODE P

DEPARTMENT OF COMMERCE

Bureau of Industry and Security

Agency Information Collection Activities; Submission to the Office of Management and Budget (OMB) for Review and Approval; Comment Request; Technology Letter of Explanation

The Department of Commerce will submit the following information collection request to the Office of Management and Budget (OMB) for review and clearance in accordance with the Paperwork Reduction Act of 1995, on or after the date of publication of this notice. We invite the general public and other Federal agencies to comment on proposed, and continuing information collections, which helps us assess the impact of our information collection requirements and minimize the public's reporting burden. Public comments were previously requested via the **Federal Register** on March 8, 2023, during a 60-day comment period. This notice allows for an additional 30 days for public comments.

Agency: Bureau of Industry and Security, Department of Commerce.

Title: Technology Letter of Explanation.

OMB Control Number: 0694–0047.

Form Number(s): None.

Type of Request: Extension of a currently approved information collection.

Number of Respondents: 6,283.

Average Hours per Response: 30 minutes to 2 hours.

Burden Hours: 9,416.

Needs and Uses: This collection is necessary under section 748.8(o) and supplement 2 section (o) to Part 748 of the Export Administration Regulations (EAR). Licensing officers must make decisions on licensing the export of United States commodities and technical data to foreign countries. When an export involves certain technical data or knowhow described in the Export Administration Regulation, additional information is required to fully understand the transaction and make a licensing decision. The Technology Letter of Explanation provides a written description of the technology proposed for export sufficient to allow BIS technical staff to evaluate the impact of licensing the export on United States national security and foreign policy. The letter of assurance puts the consignee on notice that the technology is subject to U.S. export controls and causes the consignee to certify that it will not release the data or the direct product of the data to certain specified country group nationals; thus providing assurance that U.S. national security data will be safeguarded and used only for the stated end use. The additional information is necessary to evaluate technology exports as covered under this collection.

Affected Public: Business or other for-profit organizations.

Frequency: On Occasion.

Respondent's Obligation: Voluntary.

Legal Authority: EAR sections 748.8 and sup 2 section (o) to part 748.

This information collection request may be viewed at *www.reginfo.gov.* Follow the instructions to view the Department of Commerce collections currently under review by OMB.

Written comments and recommendations for the proposed information collection should be submitted within 30 days of the publication of this notice on the following website *www.reginfo.gov/public/do/PRAMain.* Find this particular information collection by selecting "Currently under 30-day Review—Open for Public Comments" or by using the search function and entering either the title of the collection or the OMB Control Number 0694–0047.

Sheleen Dumas,

Department PRA Clearance Officer, Office of the Under Secretary for Economic Affairs, Commerce Department.

[FR Doc. 2023–10431 Filed 5–15–23; 8:45 am]

BILLING CODE 3510–33–P

DEPARTMENT OF COMMERCE

International Trade Administration

[C–570–089]

Certain Steel Racks and Parts Thereof From the People's Republic of China: Amended Final Results of Countervailing Duty Administrative Review in Part; 2020

AGENCY: Enforcement and Compliance, International Trade Administration, Department of Commerce.

SUMMARY: The U.S. Department of Commerce (Commerce) is amending the final results of the administrative review of the countervailing duty (CVD) order on certain steel racks and parts thereof from the People's Republic of China (China), covering the period of review (POR) January 1, 2020, through December 31, 2020, to correct ministerial errors.

DATES: Applicable May 16, 2023.

FOR FURTHER INFORMATION CONTACT: Drew Jackson, AD/CVD Operations, Office IV, Enforcement and Compliance, International Trade Administration, U.S. Department of Commerce, 1401 Constitution Avenue NW, Washington, DC 20230; telephone: (202) 482–4406.

SUPPLEMENTARY INFORMATION:

Background

Commerce published the final results of this review on April 10, 2023.[1] On April 11 and 12, 2023, we received timely submitted ministerial error comments from the petitioner[2] and Nanjing Dongsheng Shelf Manufacturing Co., Ltd. (Dongsheng), respectively.[3] We

[1] *See Certain Steel Racks and Parts Thereof from the People's Republic of China: Final Results and Partial Rescission of Countervailing Duty Administrative Review; 2020,* 88 FR 21177 (April 10, 2023) (*Final Results*).

[2] The petitioner is the Coalition for Fair Racks Imports.

[3] *See* Petitioner's Letter, "Ministerial Error Allegations," dated April 11, 2023; *see also*

Continued

LINCOLN COUNTY, NEVADA

REPORT ON FINANCIAL STATEMENTS AND SUPPLEMENTARY INFORMATION

YEAR ENDED JUNE 30, 2021

LINCOLN COUNTY, NEVADA
REPORT ON FINANCIAL STATEMENTS
FOR THE YEAR ENDED JUNE 30, 2021
TABLE OF CONTENTS

	PAGE
INTRODUCTORY SECTION	
Organization	1
FINANCIAL SECTION	
Independent Auditor's Report	2-4
Management's Discussion and Analysis	5-13
BASIC FINANCIAL STATEMENTS:	
GOVERNMENT-WIDE FINANCIAL STATEMENTS:	
Statement of Net Position	14
Statement of Activities	15
FUND FINANCIAL STATEMENTS:	
GOVERNMENTAL FUNDS:	
Balance Sheet	16-17
Reconciliation of the Governmental Funds Balance Sheet to the Statement of Net Position	18
Statement of Revenues, Expenditures, and Changes in Fund Balances	19-20
Reconciliation of the Statement of Revenues, Expenditures, and Changes in Fund Balance of Governmental Funds to the Statement of Activities	21
PROPRIETARY FUNDS:	
Statement of Net Position	22-23
Statement of Revenues, Expenses, and Changes in Net Position	24-25
Statement of Cash Flows	26-27
FIDUCIARY FUND:	
Statement of Net Position	28
Statement of Changes in Net Position	29
Notes to the Basic Financial Statements	30-62
REQUIRED SUPPLEMENTARY INFORMATION:	
Schedule of Revenues, Expenditures, and Changes in Fund Balance - Budget (GAAP Basis) and Actual	
General Fund (Budgetary Basis)	63-68
Road Special Revenue Fund	69
Lincoln County Water District Water Resources Special Revenue Fund	70
Lincoln County Land Act Special Use Special Revenue Fund	71
County Grant Special Revenue Fund	72
Reconciliation of the General Fund (Budgetary Basis) to the General Fund (GAAP Basis)	73
Schedule of Changes in the County's Total OPEB Liability and Related Ratios	74
Schedule of the County's Contributions to the Public Employees' Retirement System of the State of Nevada	75
Schedule of the County's Porportionate Share of the Net Pension Liability	
Public Employees' Retirement System of the State of Nevada	76
Notes to Required Supplementary Information	77
SUPPLEMENTARY INFORMATION:	
COMBINING AND INDIVIDUAL FUND STATEMENTS AND SCHEDULES:	
NONMAJOR GOVERNMENTAL FUNDS:	
Combining Balance Sheet	78
Combining Statement of Revenues, Expenditures, and Changes in Fund Balance	79
GOVERNMENTAL FUNDS:	
Reconciliation of the General Fund (Budgetary Basis) to the General Fund (GAAP Basis) - Balance Sheet	80

SUPPLEMENTARY INFORMATION (Continued):
COMBINING AND INDIVIDUAL FUND STATEMENTS AND SCHEDULES (Continued):
MAJOR GOVERNMENTAL FUNDS:
General Fund (001):
Comparative Balance Sheets 81
Schedule of Revenues, Expenditures, and Changes in Fund Balance - Budget (Budgetary Basis) and Actual 82
Schedule of Revenues Compared to Budget (Budgetary Basis) 83
Schedule of Expenditures Compared to Budget (Budgetary Basis) 84-87
Road Special Revenue Fund (009):
Comparative Balance Sheets 88
Schedule of Revenues, Expenditures, and Changes in Fund Balance - Budget (GAAP Basis) and Actual 89
Lincoln County Water District Water Resources Special Revenue Fund (103):
Comparative Balance Sheets 90
Schedule of Revenues, Expenditures, and Changes in Fund Balance - Budget (GAAP Basis) and Actual 91
Lincoln County Land Act Special Use Special Revenue Fund (097):
Comparative Balance Sheets 92
Schedule of Revenues, Expenditures, and Changes in Fund Balance - Budget (GAAP Basis) and Actual 93
County Grant Special Revenue Fund (023):
Comparative Balance Sheets 94
Schedule of Revenues, Expenditures, and Changes in Fund Balance - Budget (GAAP Basis) and Actual 95
MAJOR ENTERPRISE FUNDS:
Detention Center Enterprise Fund (064):
Comparative Statement of Net Position 96
Schedule of Revenues, Expenses and Changes in Net Position - Budget (GAAP Basis) and Actual 97
Comparative Statement of Cash Flows 98
Solid Waste (067, 130):
Statement of Net Position 99
Schedule of Revenues, Expenses and Changes in Net Position - Budget (GAAP Basis) and Actual 100
Statement of Cash Flows 101
NONMAJOR SPECIAL REVENUE FUNDS:
Combining Balance Sheet 102-111
Combining Schedule of Revenues, Expenditures, and Changes in Fund Balances 112-121
Pioche Town (018):
Comparative Balance Sheets 122
Schedule of Revenues, Expenditures, and Changes in Fund Balance - Budget (GAAP Basis) and Actual 123-124
Alamo Town (016):
Comparative Balance Sheets 125
Schedule of Revenues, Expenditures, and Changes in Fund Balance - Budget (GAAP Basis) and Actual 126-127
Panaca Town (017):
Comparative Balance Sheets 128
Schedule of Revenues, Expenditures, and Changes in Fund Balance - Budget (GAAP Basis) and Actual 129-130
Federal In Lieu Tax (012):
Comparative Balance Sheets 131
Schedule of Revenues, Expenditures, and Changes in Fund Balance - Budget (GAAP Basis) and Actual 132-133
Resource Development Authority (008):
Comparative Balance Sheets 134
Schedule of Revenues, Expenditures, and Changes in Fund Balance - Budget (GAAP Basis) and Actual 135
County Library (006):
Comparative Balance Sheets 136
Schedule of Revenues, Expenditures, and Changes in Fund Balance - Budget (GAAP Basis) and Actual 137
Museum (003):
Comparative Balance Sheets 138
Schedule of Revenues, Expenditures, and Changes in Fund Balance - Budget (GAAP Basis) and Actual 139

SUPPLEMENTARY INFORMATION (Continued):
COMBINING AND INDIVIDUAL FUND STATEMENTS AND SCHEDULES (Continued):
NONMAJOR SPECIAL REVENUE FUNDS (Conitnued):

Senior Nutrition (037):
Comparative Balance Sheets 140
Schedule of Revenues, Expenditures, and Changes in Fund Balance - Budget (GAAP Basis) and Actual 141
Transportation (011):
Comparative Balance Sheets 142
Schedule of Revenues, Expenditures, and Changes in Fund Balance - Budget (GAAP Basis) and Actual 143
Agricultural Extension (005):
Comparative Balance Sheets 144
Schedule of Revenues, Expenditures, and Changes in Fund Balance - Budget (GAAP Basis) and Actual 145
Indigent (010):
Comparative Balance Sheets 146
Schedule of Revenues, Expenditures, and Changes in Fund Balance - Budget (GAAP Basis) and Actual 147
Medical Indigent (038):
Comparative Balance Sheets 148
Schedule of Revenues, Expenditures, and Changes in Fund Balance - Budget (GAAP Basis) and Actual 149
China Springs (061):
Comparative Balance Sheets 150
Schedule of Revenues, Expenditures, and Changes in Fund Balance - Budget (GAAP Basis) and Actual 151
Ambulance (046):
Comparative Balance Sheets 152
Schedule of Revenues, Expenditures, and Changes in Fund Balance - Budget (GAAP Basis) and Actual 153
Regional Transportation Commission (050):
Comparative Balance Sheets 154
Schedule of Revenues, Expenditures, and Changes in Fund Balance - Budget (GAAP Basis) and Actual 155
Room Tax (051):
Comparative Balance Sheets 156
Schedule of Revenues, Expenditures, and Changes in Fund Balance - Budget (GAAP Basis) and Actual 157
Legal Aid Services (039):
Comparative Balance Sheets 158
Schedule of Revenues, Expenditures, and Changes in Fund Balance - Budget (GAAP Basis) and Actual 159
Forensic Services (053):
Comparative Balance Sheets 160
Schedule of Revenues, Expenditures, and Changes in Fund Balance - Budget (GAAP Basis) and Actual 161
Administrative Assessment (059):
Comparative Balance Sheets 162
Schedule of Revenues, Expenditures, and Changes in Fund Balance - Budget (GAAP Basis) and Actual 163
Forfeiture (071):
Comparative Balance Sheets 164
Schedule of Revenues, Expenditures, and Changes in Fund Balance - Budget (GAAP Basis) and Actual 165
Recorder Technology (007):
Comparative Balance Sheets 166
Schedule of Revenues, Expenditures, and Changes in Fund Balance - Budget (GAAP Basis) and Actual 167
L.C. Housing Authority (073):
Comparative Balance Sheets 168
Schedule of Revenues, Expenditures, and Changes in Fund Balance - Budget (GAAP Basis) and Actual 169
Alamo Clinic (070):
Comparative Balance Sheets 170
Schedule of Revenues, Expenditures, and Changes in Fund Balance - Budget (GAAP Basis) and Actual 171
Fair Board (044):
Comparative Balance Sheets 172
Schedule of Revenues, Expenditures, and Changes in Fund Balance - Budget (GAAP Basis) and Actual 173

SUPPLEMENTARY INFORMATION (Continued):
COMBINING AND INDIVIDUAL FUND STATEMENTS AND SCHEDULES (Continued):
NONMAJOR SPECIAL REVENUE FUNDS (Continued):
Multi-Species Habitat Conservation (014):
Comparative Balance Sheets 174
Schedule of Revenues, Expenditures, and Changes in Fund Balance - Budget (GAAP Basis) and Actual 175
Multi-Species Habitat Conservation Section 7 (077):
Comparative Balance Sheets 176
Schedule of Revenues, Expenditures, and Changes in Fund Balance - Budget (GAAP Basis) and Actual 177
Youth Activities Counsel (072):
Comparative Balance Sheets 178
Schedule of Revenues, Expenditures, and Changes in Fund Balance - Budget (GAAP Basis) and Actual 179
Genetic Marker Testing (024):
Comparative Balance Sheets 180
Schedule of Revenues, Expenditures, and Changes in Fund Balance - Budget (GAAP Basis) and Actual 181
Public Improvement (105):
Comparative Balance Sheets 182
Schedule of Revenues, Expenditures, and Changes in Fund Balance - Budget (GAAP Basis) and Actual 183
Airport (081):
Comparative Balance Sheets 184
Schedule of Revenues, Expenditures, and Changes in Fund Balance - Budget (GAAP Basis) and Actual 185
Panaca Town Building (082):
Comparative Balance Sheets 186
Schedule of Revenues, Expenditures, and Changes in Fund Balance - Budget (GAAP Basis) and Actual 187
Court Facility Fees (083):
Comparative Balance Sheets 188
Schedule of Revenues, Expenditures, and Changes in Fund Balance - Budget (GAAP Basis) and Actual 189
Lincoln County Land Act - General (091):
Comparative Balance Sheets 190
Schedule of Revenues, Expenditures, and Changes in Fund Balance - Budget (GAAP Basis) and Actual 191
Lincoln County Land Act - Planning and Development (093):
Comparative Balance Sheets 192
Schedule of Revenues, Expenditures, and Changes in Fund Balance - Budget (GAAP Basis) and Actual 193
Lincoln County Land Act - Education (094):
Comparative Balance Sheets 194
Schedule of Revenues, Expenditures, and Changes in Fund Balance - Budget (GAAP Basis) and Actual 195
Lincoln County Water - General (090):
Comparative Balance Sheets 196
Schedule of Revenues, Expenditures, and Changes in Fund Balance - Budget (GAAP Basis) and Actual 197
Lincoln County Water - Special Projects (087):
Comparative Balance Sheets 198
Schedule of Revenues, Expenditures, and Changes in Fund Balance - Budget (GAAP Basis) and Actual 199
Lincoln County Water - Planning and Development (086):
Comparative Balance Sheets 200
Schedule of Revenues, Expenditures, and Changes in Fund Balance - Budget (GAAP Basis) and Actual 201
Lincoln County Water - Special Use (084):
Comparative Balance Sheets 202
Schedule of Revenues, Expenditures, and Changes in Fund Balance - Budget (GAAP Basis) and Actual 203
Lincoln County Water - Grant Match (089):
Comparative Balance Sheets 204
Schedule of Revenues, Expenditures, and Changes in Fund Balance - Budget (GAAP Basis) and Actual 205
Lincoln County Water District - General (114, 102):
Comparative Balance Sheets 206
Schedule of Revenues, Expenditures, and Changes in Fund Balance - Budget (GAAP Basis) and Actual 207

SUPPLEMENTARY INFORMATION (Continued):
COMBINING AND INDIVIDUAL FUND STATEMENTS AND SCHEDULES (Continued):
NONMAJOR SPECIAL REVENUE FUNDS (Continued):
Lincoln County Water District - Planning & Development (100):
Comparative Balance Sheets 208
Schedule of Revenues, Expenditures, and Changes in Fund Balance - Budget (GAAP Basis) and Actual 209
Lincoln County Water District - Special Projects (101):
Comparative Balance Sheets 210
Schedule of Revenues, Expenditures, and Changes in Fund Balance - Budget (GAAP Basis) and Actual 211
Assessor Technology (106):
Comparative Balance Sheets 212
Schedule of Revenues, Expenditures, and Changes in Fund Balance - Budget (GAAP Basis) and Actual 213
District Court Technology (080):
Comparative Balance Sheets 214
Schedule of Revenues, Expenditures, and Changes in Fund Balance - Budget (GAAP Basis) and Actual 215
District Court Specialty Court (113):
Comparative Balance Sheets 216
Schedule of Revenues, Expenditures, and Changes in Fund Balance - Budget (GAAP Basis) and Actual 217
Court Security Fee (122):
Comparative Balance Sheets 218
Schedule of Revenues, Expenditures, and Changes in Fund Balance - Budget (GAAP Basis) and Actual 219
District Court Enrichment (123):
Comparative Balance Sheets 220
Schedule of Revenues, Expenditures, and Changes in Fund Balance - Budget (GAAP Basis) and Actual 221
Demerit Point Reduction (135):
Comparative Balance Sheets 222
Schedule of Revenues, Expenditures, and Changes in Fund Balance - Budget (GAAP Basis) and Actual 223
Property Management (124):
Comparative Balance Sheets 224
Schedule of Revenues, Expenditures, and Changes in Fund Balance - Budget (GAAP Basis) and Actual 225

INTERNALLY REPORTED (BUDGETARY BASIS) FUNDS REPORTED AS PART OF THE GENERAL FUND FOR EXTERNAL REPORTING PURPOSES:
Combining Balance Sheet 226-227
Combining Schedule of Revenues, Expenditures and Changes in Fund Balances 228-229
Stabilization (075):
Comparative Balance Sheets 230
Schedule of Revenues, Expenditures, and Changes in Fund Balance - Budget (GAAP Basis) and Actual 231
Planning (110):
Comparative Balance Sheets 232
Schedule of Revenues, Expenditures, and Changes in Fund Balance - Budget (GAAP Basis) and Actual 233
Rachel Jones Memorial Cemetery (062):
Comparative Balance Sheets 234
Schedule of Revenues, Expenditures, and Changes in Fund Balance - Budget (GAAP Basis) and Actual 235
Flood Control (004):
Comparative Balance Sheets 236
Schedule of Revenues, Expenditures, and Changes in Fund Balance - Budget (GAAP Basis) and Actual 237
Special Projects (129):
Comparative Balance Sheets 238
Schedule of Revenues, Expenditures, and Changes in Fund Balance - Budget (GAAP Basis) and Actual 239
Lincoln County Land Act - Emergency Disaster (095):
Comparative Balance Sheets 240
Schedule of Revenues, Expenditures, and Changes in Fund Balance - Budget (GAAP Basis) and Actual 241
Lincoln County Water - Emergency Disaster (088):
Comparative Balance Sheets 242
Schedule of Revenues, Expenditures, and Changes in Fund Balance - Budget (GAAP Basis) and Actual 243

SUPPLEMENTARY INFORMATION (Continued):
COMBINING AND INDIVIDUAL FUND STATEMENTS AND SCHEDULES (Continued):
NONMAJOR CAPITAL PROJECTS FUNDS:
Combining Balance Sheet 244-246
Combining Schedule of Revenues, Expenditures, and Changes in Fund Balances 247-249
Capital Improvements (013):
Comparative Balance Sheets 250
Schedule of Revenues, Expenditures, and Changes in Fund Balance - Budget (GAAP Basis) and Actual 251
Pioche Town Grant (035):
Comparative Balance Sheets 252
Schedule of Revenues, Expenditures, and Changes in Fund Balance - Budget (GAAP Basis) and Actual 253
Pioche Town (056):
Comparative Balance Sheets 254
Schedule of Revenues, Expenditures, and Changes in Fund Balance - Budget (GAAP Basis) and Actual 255
Alamo Town (054):
Comparative Balance Sheets 256
Schedule of Revenues, Expenditures, and Changes in Fund Balance - Budget (GAAP Basis) and Actual 257
Panaca Town (055):
Comparative Balance Sheets 258
Schedule of Revenues, Expenditures, and Changes in Fund Balance - Budget (GAAP Basis) and Actual 259
Ambulance (068):
Comparative Balance Sheets 260
Schedule of Revenues, Expenditures, and Changes in Fund Balance - Budget (GAAP Basis) and Actual 261
Fair Board (045):
Comparative Balance Sheets 262
Schedule of Revenues, Expenditures, and Changes in Fund Balance - Budget (GAAP Basis) and Actual 263
Vehicle (042):
Comparative Balance Sheets 264
Schedule of Revenues, Expenditures, and Changes in Fund Balance - Budget (GAAP Basis) and Actual 265
Road Equipment (028):
Comparative Balance Sheets 266
Schedule of Revenues, Expenditures, and Changes in Fund Balance - Budget (GAAP Basis) and Actual 267
Airport (027):
Comparative Balance Sheets 268
Schedule of Revenues, Expenditures, and Changes in Fund Balance - Budget (GAAP Basis) and Actual 269
Lincoln County Land Act (092):
Comparative Balance Sheets 270
Schedule of Revenues, Expenditures, and Changes in Fund Balance - Budget (GAAP Basis) and Actual 271
Lincoln County Water (085):
Comparative Balance Sheets 272
Schedule of Revenues, Expenditures, and Changes in Fund Balance - Budget (GAAP Basis) and Actual 273
Lincoln County Water District (099):
Comparative Balance Sheets 274
Schedule of Revenues, Expenditures, and Changes in Fund Balance - Budget (GAAP Basis) and Actual 275
NONMAJOR ENTERPRISE FUNDS:
Combining Statement of Net Position 276-277
Combining Schedule of Revenues, Expenses and Changes in Net Position 278-279
Combining Statement of Cash Flows 280-281
Pioche Public Utility Water (115, 117, 132):
Comparative Statement of Net Position 282
Schedule of Revenues, Expenses and Changes in Net Position - Budget (GAAP Basis) and Actual 283
Comparative Statement of Cash Flows 284
Pioche Public Utility Sewer (019, 036, 119, 131):
Comparative Statement of Net Position 285
Schedule of Revenues, Expenses and Changes in Net Position - Budget (GAAP Basis) and Actual 286
Comparative Statement of Cash Flows 287

SUPPLEMENTARY INFORMATION (Continued):
COMBINING AND INDIVIDUAL FUND STATEMENTS AND SCHEDULES (Continued):
NONMAJOR ENTERPRISE FUNDS (Continued):
Pioche Public Utility Electric (116, 118):
Comparative Statement of Net Position 288
Schedule of Revenues, Expenses and Changes in Net Position - Budget (GAAP Basis) and Actual 289
Comparative Statement of Cash Flows 290
Building Department (049):
Comparative Statement of Net Position 291
Schedule of Revenues, Expenses and Changes in Net Position - Budget (GAAP Basis) and Actual 292
Comparative Statement of Cash Flows 293

FIDUCIARY FUNDS:
Combining Statement of Net Position 294-297
Combining Statement of Changes in Net Position 298-301

COMPLIANCE:
Independent Auditor's Report on Internal Control Over Financial Reporting and on Compliance and Other Matters Based on an Audit of Financial Statements Performed in Accordance with *Government Auditing Standards* 302-303

Auditor's Comments 304-305

LINCOLN COUNTY, NEVADA
ORGANIZATION

COUNTY OFFICERS at June 30, 2021:

Commissioners	Jared Brackenbury, Chairman
	Bevan Lister, Vice Chairman
	Kevin Phillips, Member
	Varlin Higbee, Member
	Keith Pearson, Member
Clerk	Lisa Lloyd
Treasurer	Shawn Frehner
Auditor/Recorder	Amy Elmer
Assessor	Mark Holt
Sheriff	Kerry Lee
District Attorney	Dylan Frehner
Justice of the Peace	Mike Cowley
Justice of the Peace	Nola Holton

DANIEL C. McARTHUR, LTD.
Certified Public Accountant

Quail Park III • 501 So. Rancho Dr., Ste. E-30 • Las Vegas, NV 89106 • (702) 385-1899 • FAX (702) 385-9619

INDEPENDENT AUDITOR'S REPORT

Honorable Board of County Commissioners
Lincoln County, Nevada
Pioche, Nevada

Report on the Financial Statements

We have audited the accompanying financial statements of the governmental activities, the business-type activities, each major fund, and the aggregate remaining fund information of Lincoln County, Nevada (the County), as of and for the year ended June 30, 2021, and the related notes to the financial statements, which collectively comprise the County's basic financial statements as listed in the table of contents.

Management's Responsibility for the Financial Statements

Management is responsible for the preparation and fair presentation of these financial statements in accordance with accounting principles generally accepted in the United States of America; this includes the design, implementation, and maintenance of internal control relevant to the preparation and fair presentation of financial statements that are free from material misstatement, whether due to fraud or error.

Auditor's Responsibility

Our responsibility is to express opinions on these financial statements based on our audit. We conducted our audit in accordance with auditing standards generally accepted in the United States of America and the standards applicable to financial audits contained in *Government Auditing Standards*, issued by the Comptroller General of the United States. Those standards require that we plan and perform the audit to obtain reasonable assurance about whether the financial statements are free from material misstatement.

An audit involves performing procedures to obtain audit evidence about the amounts and disclosures in the financial statements. The procedures selected depend on the auditor's judgment, including the assessment of the risks of material misstatement of the financial statements, whether due to fraud or error. In making those risk assessments, the auditor considers internal control relevant to the entity's preparation and fair presentation of the financial statements in order to design audit procedures that are appropriate in the circumstances, but not for the purpose of expressing an opinion on the effectiveness of the entity's internal control. Accordingly, we express no such opinion. An audit also includes evaluating the appropriateness of accounting policies used and the reasonableness of significant accounting estimates made by management, as well as evaluating the overall presentation of the financial statements.

We believe that the audit evidence we have obtained is sufficient and appropriate to provide a basis for our audit opinions.

Opinions

In our opinion, the financial statements referred to above present fairly, in all material respects, the respective financial position of the governmental activities, the business-type activities, each major fund, and the aggregate remaining fund information of Lincoln County, Nevada, as of June 30, 2021, and the respective changes in financial position and, where applicable, cash flows thereof, for the year then ended in accordance with accounting principles generally accepted in the United States of America.

Emphasis of Matter - Change in Accounting Principle

As discussed in Note A5 to the financial statements in 2021, the County adopted new accounting guidance, the provisions of *GASB Statement No. 84, Fiduciary Activities*. Our opinions are not modified with respect to this matter.

Other Matters

Required Supplementary Information

Accounting principles generally accepted in the United States of America require that the Management's Discussion and Analysis on pages 5-13, budgetary comparisons information on pages 63-72, Reconciliation of the General Fund (Budgetary Basis) to the General Fund (GAAP Basis) on page 73, Schedule of Changes in the County's Total OPEB Liability and Related Ratios on page 74, Schedule of the County's Contributions to the Public Employees' Retirement System of the State of Nevada on Page 75, and Schedule of the County's Proportionate Share of the Net Pension Liability Public Employees' Retirement System of the State of Nevada on page 76 be presented to supplement the basic financial statements. Such information, although not a part of the basic financial statements, is required by the Governmental Accounting Standards Board, who considers it to be an essential part of financial reporting for placing the basic financial statements in an appropriate operational, economic, or historical context. We have applied certain limited procedures to the required supplementary information in accordance with auditing standards generally accepted in the United States of America, which consisted of inquiries of management about the methods of preparing the information and comparing the information for consistency with management's responses to our inquiries, the basic financial statements, and other knowledge we obtained during our audit of the basic financial statements. We do not express an opinion or provide any assurance on the information because the limited procedures do not provide us with sufficient evidence to express an opinion or provide any assurance.

Other Information

Our audit for the year ended June 30, 2021 was conducted for the purpose of forming opinions on the financial statements that collectively comprise the County's basic financial statements. The combining and individual fund financial statements and schedules for the year ended June 30, 2021 are presented for purposes of additional analysis and are not a required part of the basic financial statements. Such information is the responsibility of management and was derived from and relates directly to the underlying accounting and other records used to prepare the basic financial statements. The combining and individual fund financial statements and schedules have been subjected to the auditing procedures applied in the audits of the basic financial statements for the year ended June 30, 2021, and certain additional procedures, including comparing and reconciling such information directly to the underlying accounting and other records used to prepare the basic financial statements or to the basic financial statements themselves, and other additional procedures in accordance with auditing standards generally accepted in the United States of America. In our opinion, the combining and individual fund financial statements and schedules are fairly stated in all material respects in relation to the basic financial statements as a whole for the year ended June 30, 2021.

We also previously audited, in accordance with auditing standards generally accepted in the United States of America, the basic financial statements of the County as of and for the year ended June 30, 2020 (not presented herein), and have issued our report thereon dated November 25, 2020, which contained unmodified opinions on the respective financial statements of the governmental activities, the business-type activities, each major fund, and the aggregate remaining fund information. The combining and individual fund financial statements and schedules for the year ended June 30, 2020, are presented for purposes of additional analysis and are not a required part of the basic financial statements. Such information is the responsibility of management and was derived from and relates directly to the underlying accounting and other records used to prepare the 2020 financial statements. The combining and individual fund financial statements and schedules have been subjected to the auditing procedures applied in the audit of the 2020 basic financial statements and certain additional procedures, including comparing and reconciling such information directly to the underlying accounting and other records used to prepare those financial statements or to those financial statements themselves, and other additional procedures in accordance with auditing standards generally accepted in the United States of America. In our opinion, the combining and individual fund financial statements and schedules are fairly stated in all material respects in relation to the basic financial statements as a whole for the year ended June 30, 2020.

Other Reporting Required by *Government Auditing Standards*

In accordance with *Government Auditing Standards*, we have also issued our report dated November 29, 2021 on our consideration of the County's internal control over financial reporting and on our tests of its compliance with certain provisions of laws, regulations, contracts, and grant agreements and other matters. The purpose of that report is solely to describe the scope of our testing of internal control over financial reporting and compliance and the results of that testing, and not to provide an opinion on the effectiveness of the County's internal control over financial reporting or on compliance. That report is an integral part of an audit performed in accordance with *Government Auditing Standards* in considering the County's internal control over financial reporting and compliance.



Las Vegas, Nevada
November 29, 2021

As management of Lincoln County, Nevada, we offer readers of Lincoln County, Nevada's financial statements this narrative overview and analysis of the financial activities of Lincoln County, Nevada, for the fiscal year end June 30, 2021. The Management's Discussion and Analysis ("MD&A") introduces the financial reports for Lincoln County, Nevada. The MD&A is designed to give the reader an easy-to-understand overview of the County's financial position and results of operations for the year. The MD&A is separated into Financial Highlights, an Overview of the Financial Statements, Government-Wide Financial Analysis, Financial Analysis of the County's Governmental Funds, Financial Analysis of the County's Enterprise Funds, General Fund Budgetary Highlights, Capital Assets and Debt Administration, and Economic Factors and Next Year's Budget and Rates.

FINANCIAL HIGHLIGHTS

The assets of the County exceeded its liabilities at the close of the 2021 fiscal year by $35,211,446 (net position). Total net position represents approximately $24,276,181 in capital assets, net of related debt, and $7,588,895 in assets restricted for debt services, capital projects, public works, and for other purposes. The remaining $3,346,370 represents unrestricted net position, which may be used to meet the County's ongoing obligations to its citizens and creditors.

The government-wide net position of the County decreased during the fiscal year 2021 by $569,865, or 1.59%.

At the end of fiscal year 2021, the County's governmental funds reported combined fund balances of $21,256,476; a decrease of $269,886, or 1.25%, when compared to the previous year.

The County's primary revenue sources for governmental activities were ad valorem (property) taxes of $3,277,602, fuel taxes of $1,763,861, charges for services of $1,039,527, consolidated taxes of $1,610,533, operating grants and contributions of $1,691,157, and federal in lieu taxes of $980,517. These revenue sources comprised 26.02%, 14.01%, 8.25%, 12.79%, 13.43%, and 7.79% respectively, or 82.29%, of total governmental activities revenues. Business-type activities revenue from charges for services was $1,027,796.

The County's total government-wide expenses were $13,949,168. The greatest expenses were in the General Government $3,464,746, Public Works $2,285,986, and Public Safety $1,726,783 functions. Business-type activities contributed $2,176,794 to total expenses.

OVERVIEW OF THE FINANCIAL STATEMENTS

This Management's Discussion and Analysis is intended to serve as an introduction to the County's basic financial statements which consists of government-wide financial statements, fund financial statements, and accompanying notes. This report also contains required supplementary information in addition to the basic financial statements.

Government-Wide Financial Statements: The government-wide financial statements are designed to provide readers with a broad overview of the County's finances in a manner similar to a private-sector business.

The Statement of Net Position presents information on all of the County's assets, deferred outflows/inflows and liabilities with the difference reported as net position. Increases or decreases in net position may serve as a useful indicator of whether the financial position of the County is improving or deteriorating.

OVERVIEW OF THE FINANCIAL STATEMENTS(Continued)

The Statement of Activities presents information showing how the County's net position changed during the most recent fiscal year. All changes in net position are reported as soon as the underlying event giving rise to the change occurs, regardless of the timing of related cash flows. Thus, revenues and expenses are reported in this statement for some items that will only result in cash flows in future fiscal periods (e.g., uncollected taxes and earned but unused vacation and sick leave).

The government-wide financial statements report two types of activities: governmental activities and business-type activities. The government-wide financial statements distinguish functions of the County that are principally supported by taxes and intergovernmental revenues (governmental activities) from other functions that are intended to recover all or a significant portion of their costs through user fees and charges (business-type activities). The governmental activities of the County include general government, public safety, public works, judicial, health, welfare, community support, culture and recreation, and intergovernmental. The business-type activities include operations of its detention center, utilities, solid waste, and building department operations.

Fund Financial Statements: A fund is a grouping of related accounts used to maintain control over resources that have been segregated for specific activities or objectives. The County, like other state and local governments, uses fund accounting to ensure and demonstrate compliance with finance-related legal requirements. All of the funds of the County can be divided into three categories: governmental funds, proprietary funds, and fiduciary funds.

Governmental Funds: Governmental funds are used to account for essentially the same functions reported as governmental activities in the government-wide financial statements. However, unlike the government-wide financial statements, governmental fund financial statements focus on near-term inflows and outflows of spendable resources, as well as on balances of spendable resources available at the end of the fiscal year. Such information may be useful in evaluating the County's near-term financial requirements.

Because the focus of governmental funds is narrower than that of the government-wide financial statements, it is useful to compare the information presented for governmental funds with similar information presented for governmental activities in the government-wide financial statements. By doing so, readers may better understand the long-term impact of the County's near-term financing decisions. Both the governmental fund balance sheet and the governmental fund statement of revenues, expenditures, and changes in fund balances provide a reconciliation to facilitate this comparison between governmental funds and governmental activities.

The County maintains individual governmental funds. Information is presented separately in the governmental balance sheet and the governmental fund statement of revenues, expenditures, and changes in fund balances for the General Fund, Road Fund, Lincoln County Water District Water Resources Fund, Lincoln County Land Act Special Use Fund, and County Grant Fund, each of which is considered to be a major fund. Data from the other governmental funds are combined into a single, aggregated presentation. Individual fund data for each of these nonmajor governmental funds is provided in the combining and individual fund statements and schedules.

The County adopts an annual appropriated budget for each of its governmental funds. A budgetary comparison statement is provided for each of the County's governmental funds to demonstrate compliance with the budget. The budgetary comparison statements for the major governmental funds are presented as required supplementary information; the budgetary comparison statements for all other governmental funds are included in the fund financial statements accompanying information.

OVERVIEW OF THE FINANCIAL STATEMENTS(Continued)

Proprietary Funds: The County maintains one type of proprietary fund, the Enterprise Fund. The Enterprise Fund is used to report the same functions presented as business-type activities in the government-wide financial statements. The County uses the Enterprise Funds to account for its utility activities, building department activities, solid waste operation, and operation of the detention center.

Proprietary funds provide the same type of information as the government-wide financial statements, only in more detail. The proprietary fund financial statements provide separate information for the utility funds, building department, solid waste, and detention center. The Detention Center and Solid Waste are considered to be major funds of the County.

Fiduciary Funds: Fiduciary funds are used to account for the resources held for the benefit of parties outside of the government; Fiduciary funds are not reported in the government wide financial statements because the resources of those funds are not available to support the County's own programs. The accounting used for fiduciary funds is much like that used for proprietary funds.

The County has one type of fiduciary fund, the Custodial Fund. The Custodial Fund reports resources held by the County in a custodial capacity for individuals, private organizations, other governments, and the external investment pool operated by the Lincoln County Treasurer.

Notes to Financial Statements: The notes to the financial statements provide additional information that is essential to acquire a full understanding of the data provided in the government-wide and fund financial statements.

Other Information: In addition to the basic financial statements and accompanying notes, this report also presents certain required supplementary information concerning the County's progress in funding its obligation to provide other post-employment benefits to its employees; schedules of the County's contributions to and proportionate share of the net pension liability, and schedules of budgetary comparisons for both the original and final budgets of the General Fund and the various other major County funds.

The combining statements and individual fund schedules referred to earlier in connection with the nonmajor governmental funds are presented immediately following the required supplementary information.

GOVERNMENT-WIDE FINANCIAL ANALYSIS

Net position of the County as of June 30, 2021, is summarized and analyzed below:

Net Position

	Governmental Activities		Business-type Activities		Total Primary Government	
	2021	2020	2021	2020	2021	2020
Assets:						
Current and other assets	$ 22,959,056	$ 22,900,634	$ 1,731,021	$ 1,849,656	$ 24,690,077	$ 24,750,290
Net capital assets	22,424,930	22,843,095	2,747,450	2,763,346	25,172,380	25,606,441
Total assets	45,383,986	45,743,729	4,478,471	4,613,002	49,862,457	50,356,731
Deferred outflows of resources:	926,228	1,167,577	330,418	461,606	1,256,646	1,629,183
Liabilities:						
Current liabilities	1,819,358	1,538,303	382,634	479,781	2,201,992	2,018,084
Long-term liabilities	7,851,886	7,988,396	4,344,546	4,483,951	12,196,432	12,472,347
Total liabilities	9,671,244	9,526,699	4,727,180	4,963,732	14,398,424	14,490,431
Deferred inflows of resources:	1,071,570	1,259,668	437,663	454,503	1,509,233	1,714,171
Net position:						
Invested in capital assets, net of related debt	22,390,118	22,721,713	1,886,063	2,585,857	24,276,181	25,307,570
Restricted	7,577,405	7,721,070	11,490	11,490	7,588,895	7,732,560
Unrestricted	5,599,877	5,682,156	(2,253,507)	(2,940,974)	3,346,370	2,741,182
Total net position	$ 35,567,400	$ 36,124,939	$ (355,954)	$ (343,627)	$ 35,211,446	$ 35,781,312

As noted earlier, net assets may serve over time as a useful indicator of the County's financial position. Assets exceeded liabilities by $35,211,446 as of June 30, 2021, and by $35,781,312 as of June 30, 2020, resulting in a net decrease of $595,866, or 1.59%.

A portion of the County's net position, 68.94%, reflects its investment in capital assets (e.g., land, buildings, machinery and equipment, etc.), net of any related debt outstanding used to acquire those assets. The County uses these capital assets to provide services to citizens; consequently, these assets are not available for future spending. Although the County's investment in its capital assets is reported net of related debt, it should be noted that the resources needed to repay this debt must be provided from other sources, since the capital assets themselves cannot be used to liquidate the debt.

The County's restricted net position of 21.55% represents resources that are subject to external restrictions on how they may be used.

The remaining portion of the County's net position, 9.51%, is unrestricted and may be used to meet the County's ongoing obligations to citizens and creditors.

At June 30, 2021, the County had positive balances in all three categories of net assets for governmental activities. The negative unrestricted net position for business-type activities relates to the County's share of the net pension liability.

Changes in net position of the County are summarized as follows:

	Governmental Activities		Business-type Activities		Total	
	2021	2020	2021	2020	2021	2020
Revenues:						
Program revenues:						
Charges for services	$ 1,039,527	$ 1,290,248	$ 1,027,796	$ 3,023,940	$ 2,067,323	$ 4,314,188
Operating grants and contributions	1,691,157	1,074,896	-	-	1,691,157	1,074,896
Capital grants and contributions	782,333	340,169	7,913	-	790,246	340,169
General revenues:						
Ad valorem taxes	3,277,602	3,183,017	-	-	3,277,602	3,183,017
Consolidated taxes	1,610,533	1,546,075	-	-	1,610,533	1,546,075
Fuel taxes	1,763,861	1,731,672	-	-	1,763,861	1,731,672
Federal in lieu taxes	980,517	974,644	-	-	980,517	974,644
Gaming taxes	114,306	127,467	-	-	114,306	127,467
Room taxes	108,132	70,479	-	-	108,132	70,479
Marijuana fees	88,235	88,270	-	-	88,235	88,270
Tax penalties and costs	65,620	50,574	-	-	65,620	50,574
Excess proceeds	-	24,697	-	-	-	24,697
Fish and wildlife	3,224	3,298	-	-	3,224	3,298
Rent	108,584	135,208	-	-	108,584	135,208
National forest	12,597	14,947	-	-	12,597	14,947
Water sales	243,281	186,503	-	-	243,281	186,503
Coyote Springs GID dissolution	-	916,307	-	-	-	916,307
Investment income (loss)	67,482	833,993	535	16,092	68,017	850,085
Miscellaneous	637,461	66,868	-	-	637,461	66,868
Special assessment - debt	-	-	40,865	40,260	40,865	40,260
Capital fees	-	-	31,358	56,612	31,358	56,612
Custom fees	-	-	-	11,075	-	11,075
Total revenues	12,594,452	12,659,332	1,108,467	3,147,979	13,630,696	15,807,311
Expenses:						
General government	3,464,746	3,727,601	-	-	3,464,746	3,727,601
Public safety	1,726,783	2,248,318	-	-	1,726,783	2,248,318
Judicial	1,141,324	1,214,032	-	-	1,141,324	1,214,032
Public works	2,285,986	2,349,771	-	-	2,285,986	2,349,771
Health	247,799	371,633	-	-	247,799	371,633
Welfare	709,820	652,626	-	-	709,820	652,626
Culture and recreation	839,133	833,354	-	-	839,133	833,354
Community support	271,485	270,822	-	-	271,485	270,822
Intergovernmental	1,053,120	127,313	-	-	1,053,120	127,313
Other	4,515	15,911	2,176,794	3,384,680	2,181,309	3,400,591
Loss on disposal of assets	27,663	5,280	-	-	27,663	5,280
Total expenses	11,772,374	11,816,661	2,176,794	3,384,680	13,949,168	15,201,341
Change in net position before transfers and special items	822,078	842,671	(1,068,327)	(236,701)	(318,472)	605,970
Special items	(323,617)	(516,980)	-	(223,875)	(323,617)	(740,855)
Transfers	(1,056,000)	(110,000)	1,056,000	110,000	-	-
Change in net position	(557,539)	215,691	(12,327)	(350,576)	(642,089)	(134,885)
Net position - beginning	36,124,939	35,909,248	(343,627)	6,949	35,781,312	35,916,197
Net position - ending	$ 35,567,400	$ 36,124,939	$ (355,954)	$ (343,627)	$ 35,139,223	$ 35,781,312

Program revenues include charges for services, fines and forfeitures, certain licenses and permits, and both operating and capital grans and contributions. General revenues consist of taxes, rent, investment income, and miscellaneous.

FINANCIAL ANALYSIS OF THE COUNTY'S GOVERNMENTAL FUNDS

The County uses fund accounting to ensure and demonstrate compliance with finance-related legal requirements.

Governmental Funds:

As of the end of the current fiscal year, the County's governmental funds reported a combined ending fund balance of $21,256,476, a decrease of $269,886, or 1.25%, from the prior year. Fund balance components have been classified as nonspendable, restricted, committed, assigned and/or unassigned based primarily on the extent to which the County is bound to observe constraints imposed on the use of the resources of each fund. Restricted fund balance is $7,577,405, or 35.65% of total. Spending of these resources is constrained by externally imposed (statutory, bond covenant, or grantors) limitations on their use. The largest restricted fund balances include $905,030 for multi-species conservation, $1,586,929 for capital projects, $1,858,106 for public works, and $1,050,131 for welfare.

Committed and assigned fund balances combined to represent 60.78% of total fund balance with spending constrained by either the Board of County Commissioners (for committed) or senior management (for assigned). Committed balances in the special revenue funds are primarily due to revenues directed by the Commission to those funds to support programs. The largest committed fund balances include $4,501,916 for the Lincoln County Water District and $3,590,697 for Lincoln County Land Act. The assigned fund balance of $1,085,330 was assigned for use in the subsequent year.

Major Funds:

General Fund (Budgetary Basis): The General Fund is the chief operating fund of the County. At the end of the current fiscal year, the fund balance (budgetary basis) of the General Fund was $1,868,240, a decrease of $472,705, or 20.19%. The General Fund revenues decreased by $694,821, or 11.99%. Taxes increased by $155,155, or 6.84%. Intergovernmental decreased by $772,513, or 29.65% due to prior year revenue from the Coyote Springs dissolution of $916,307. Charges for services increased by $87,206, or 24.47%, due to increased security contract and tax penalties and costs. Miscellaneous revenues decreased $164,644, or 56.67%, mostly due to a decrease in investment income due to market declines in value.

Expenditures increased by $605,626, or 13.89%. General government expenditures decreased by $71,703, or 4.89% due to a decrease in most departments. Public safety expenditures decreased by $240,904, or 13.91%, due to a decrease in salaries, benefits, and service and supplies for the sheriff's office. Intergovernmental expenditures increased by $916,193, or 100.00%, due to payments made related to the Coyotes Springs dissolution.

Road Fund: The Road Fund balance for the fund increased by $124,060 to $925,829, or 15.47%. The Road Fund revenues increased $153,362, or 9.35%, due to equipment rental income of $150,000 from the State of Nevada. Road Fund expenditures decreased by $45,203, or 2.80%, due to a decrease in services and supplies expenditures.

Lincoln County Water District Water Resources Fund: The Lincoln County Water District Water Resources Fund balance decreased by $191,452, or 6.88%, from the prior year. This was due to a transfer of $200,000 to the Water District General Fund.

Lincoln County Land Act Special Use Fund: The Lincoln County Land Act Special Use Fund balance increased by $25,035, or 0.73% from the prior year. This was due to receiving investment income, loan interest income, and rental income with no expenditures in the current year.

County Grant Fund: The County Grant Fund revenues increased by $1,142,140, or 124.62%, and expenditures increased by $1,192,129, or 122.11%. The increases were due to receiving more grant monies in the current year including $750,023 from the CARES Act.

FINANCIAL ANALYSIS OF THE COUNTY'S ENTERPRISE FUNDS

Enterprise Funds provide the same type of information found in the government-wide financial statements, but in more detail. Unrestricted net position of the enterprise funds was a deficit of $2,253,507. Total net position for these funds decreased by $12,327 from the prior year.

The **Detention Center Fund**, a major fund, had operating revenues decrease by $1,805,748, or 96.41%, due to a decrease in inmate fees. Operating expenses decreased by $975,949, or 45.88% due to a decrease in salaries, benefits and services and supplies.

The **Solid Waste Fund**, a major fund, had operating revenues increase by $1,086, or 0.19%, during the year. Operating expenses increased by $38,017, or 6.79%, due to an increase in salaries, services and supplies, and depreciation expense due to the purchase of new equipment in the prior and current year.

GENERAL FUND BUDGETARY HIGHLIGHTS

The original budget (2020-21 Final Budget) was approved May 18, 2020.

Original budget compared to final budget: During the year there was a need for an amendment to increase original estimated revenues and original budgeted appropriations. There was also a need to make an amendment to reallocate appropriations among departments when it became clearer which departments would actually be charged for certain expenses. Generally, the movement of the appropriations between departments was not significant.

Final budget compared to actual results: The most significant differences for the General Fund were as follows:

Overall, the revenues received were more than budgeted by 6.04% or $290,562. Revenues received in excess of budgeted amounts were 0.91% for taxes, 17.76% for licenses and permits, 9.35% for intergovernmental, 12.77% for charges for services, and 43.89% for fines and forfeitures. The shortfall in revenue sources was 13.17% for miscellaneous.

A review of actual expenditures compared to the appropriations in the final budget shows expenditures were $425,723 less than budgeted or 7.90%. Expenditures were under budget for all functions of the General Fund except health which was over 0.77%. The largest functions under budget were general government 13.27% and judicial 12.64%.

Actual fund balance (budgetary basis) of $1,868,240, was $782,910 higher than anticipated to begin the 2021 - 2022 year.

CAPITAL ASSETS

The County's investment in capital assets, net of accumulated depreciation, at June 30, 2021, was $22,424,930 in governmental activities and $2,747,450 in business-type activities. A summary of changes in capital assets for the year ended June 30, 2021, follows:

CAPITAL ASSETS (Continued)

Governmental Activities:

	Balance June 30, 2020	Additions	Transfers	Dispositions	Balance June 30, 2021
Capital assets not being depreciated:					
Land	$ 1,809,860	$ -	$ -	$ -	$ 1,809,860
Construction in progress	-	87,963	-	-	87,963
Total capital assets not being depreciated	1,809,860	87,963	-	-	1,897,823
Capital assets being depreciated:					
Building and improvements	24,007,629	413,458	-	-	24,421,087
Infrastructure	2,150,970	-	-	-	2,150,970
Equipment	8,932,904	634,722	(696,639)	(84,379)	8,786,608
Total capital assets being depreciated	35,091,503	1,048,180	(696,639)	(84,379)	35,358,665
Less accumulated depreciation for:					
Building and improvements	8,758,484	867,426	-	-	9,625,910
Infrastructure	416,839	43,020	-	-	459,859
Equipment	4,882,945	376,242	(465,182)	(48,216)	4,745,789
Total accumulated depreciation	14,058,268	1,286,688	(465,182)	(48,216)	14,831,558
Total capital assets being depreciated, net	21,033,235	(238,508)	(231,457)	(36,163)	20,527,107
Governmental activities assets, net	$ 22,843,095	$ (150,545)	$ (231,457)	$ (36,163)	$ 22,424,930

Business-type Activities:

	Balance June 30, 2020	Additions	Transfers	Dispositions	Balance June 30, 2021
Capital assets not being depreciated:					
Land	$ 214,000	$ -	$ -	$ -	$ 214,000
Construction in progress	-	23,500	-	-	23,500
Total capital assets not being depreciated	214,000	23,500	-	-	237,500
Capital assets being depreciated:					
Building and improvements	1,374,844	-	-	-	1,374,844
Utility system	1,383,402	23,635	-	-	1,407,037
Equipment	1,898,420	125,096	-	-	2,023,516
Total capital assets being depreciated	4,656,666	148,731	-	-	4,805,397
Less accumulated depreciation for:					
Building and improvements	471,761	43,998	-	-	515,759
Utility system	720,425	33,414	-	-	753,839
Equipment	915,134	110,715	-	-	1,025,849
Total accumulated depreciation	2,107,320	188,127	-	-	2,295,447
Total capital assets being depreciated, net	2,549,346	(39,396)	-	-	2,509,950
Business-type activities assets, net	$ 2,763,346	$ (15,896)	$ -	$ -	$ 2,747,450

Major capital asset events during the current fiscal year included the following:

- Building and other improvements for the Airport and Trap Range.
- Equipment for the sheriff, general government, and other culture and recreation equipment.

DEBT ADMINISTRATION

Changes in Long-term Debt: During the year ended June 30, 2021, the following changes occurred in long-term debt:

Governmental activities:

	Balance June 30, 2020	Net Additions	Net Deletions	Balance June 30, 2021	Due within One Year
Compensated absences	$ 420,161	$ -	$ 30,842	$ 389,319	$ 214,125
Net pension liability	7,364,827	-	87,867	7,276,960	-
Total OPEB obligation payable	406,098	-	6,366	399,732	-
Capital lease payable	108,723	-	75,283	33,440	33,440
Total	$ 8,299,809	$ -	$ 200,358	$ 8,099,451	$ 247,565

Business-type activities:

	Balance June 30, 2020	Net Additions	Net Deletions	Balance June 30, 2021	Due within One Year
Compensated absences	$ 178,758	$ -	$ 15,277	$ 163,481	$ 89,913
Net pension liability	3,351,954	-	62,684	3,289,270	-
Total OPEB obligation payable	114,906	-	775	114,131	-
Landfill closure and postclosure cost	80,000	10,000	-	90,000	-
Bond payable	177,489	-	3,440	174,049	3,592
Total	$ 3,903,107	$ 10,000	$ 82,176	$ 3,830,931	$ 93,505

The County's debt decreased by $200,358 for governmental activities during the current fiscal year. The reductions were mainly from a decrease in net pension liability and capital lease payable.

The County's debt decreased by $72,176 for business-type activities during the current fiscal year. The primary reason for the decrease was a reduction in estimated compensated absences and net pension liability.

Additional information on the County's long-term debt can be found in **Note D6**.

ECONOMIC FACTORS AND NEXT YEAR'S BUDGET AND RATES

The County approved the budget for the 2021-2022 year on May 17, 2021. The following factors were considered in the development of the budget.

- Assessed valuation for the County increased and tax rates remained unchanged.

REQUESTS FOR INFORMATION

This financial report is designed to provide its users with a general overview of Lincoln County, Nevada's finances and to demonstrate the County's accountability for the revenues it receives. Any comments, further questions, or requests for additional information should be addressed to:

County Administration - Lincoln County, Nevada
PO Box 218
Pioche, Nevada 89043

LINCOLN COUNTY, NEVADA
STATEMENT OF NET POSITION
JUNE 30, 2021

	Primary Government		
	Governmental Activities	Business-type Activities	Total
Assets:			
Cash and cash equivalents	$ 20,814,769	$ 1,465,415	$ 22,280,184
Interest receivable	51,072	433	51,505
Taxes receivable	32,356	-	32,356
Due from other governments	1,107,347	-	1,107,347
Due from others	240,625	-	240,625
Prepaid expense	25,549	-	25,549
Accounts receivable	-	160,237	160,237
Interfund receivable	687,338	-	687,338
Restricted assets- Cash	-	104,936	104,936
Capital assets net of accumulated depreciation	22,424,930	2,747,450	25,172,380
Total assets	45,383,986	4,478,471	49,862,457
Deferred outflows of resources:			
Deferred net pension charge	906,827	324,690	1,231,517
Deferred total OPEB	19,401	5,728	25,129
Total deferred outflows of resources	926,228	330,418	1,256,646
Liabilities:			
Accounts payable	411,929	61,845	473,774
Accrued payroll and benefits	346,105	134,013	480,118
Customer deposits	-	60	60
Unearned revenue	812,387	-	812,387
Accrued interest payable	1,372	12,993	14,365
Current portion of liabilities due within one year:			
Accrued compensated absences	214,125	89,913	304,038
Interfund payable	-	80,218	80,218
Lease payable	33,440	-	33,440
Current portion of liabilities payable from restricted assets:			
Bond payable	-	3,592	3,592
Long-term liabilities due or payable after one year:			
Accrued compensated absences	175,194	73,568	248,762
Landfill closure and postclosure costs	-	90,000	90,000
Interfund payable	-	607,120	607,120
Net pension liability	7,276,960	3,289,270	10,566,230
Total OPEB liability	399,732	114,131	513,863
Bond payable	-	170,457	170,457
Total liabilities	9,671,244	4,727,180	14,398,424
Deferred inflows of resources:			
Deferred net pension charge	1,071,570	437,663	1,509,233
Net position:			
Invested in capital assets, net of debt	22,390,118	1,886,063	24,276,181
Restricted	7,577,405	11,490	7,588,895
Unrestricted	5,599,877	(2,253,507)	3,346,370
Total net position	$ 35,567,400	$ (355,954)	$ 35,211,446

The notes to the financial statements are an integral part of this statement.

LINCOLN COUNTY, NEVADA
STATEMENT OF ACTIVITIES
JUNE 30, 2021

Functions/Programs	Expenses	Program Revenues: Charges for Services	Program Revenues: Operating Grants and Contributions	Program Revenues: Capital Grants and Contributions	Changes in Net Position: Governmental Activities	Changes in Net Position: Business-type Activities	Total
Primary governments:							
General government	$ (3,464,746)	$ 177,230	$ 1,017,327	$ 195,649	$ (2,074,540)	$ -	$ (2,074,540)
Public safety	(1,726,783)	262,799	176,887	50,490	(1,236,607)	-	(1,236,607)
Judicial	(1,141,324)	388,923	2,726	-	(749,675)	-	(749,675)
Public works	(2,285,986)	74,490	37,938	191,678	(1,981,880)	-	(1,981,880)
Health	(247,799)	115,491	-	-	(132,308)	-	(132,308)
Welfare	(709,820)	-	260,700	138,731	(310,389)	-	(310,389)
Culture and recreation	(839,133)	-	40,955	205,785	(592,393)	-	(592,393)
Community support	(271,485)	20,594	154,624	-	(96,267)	-	(96,267)
Intergovernmental	(1,053,120)	-	-	-	(1,053,120)	-	(1,053,120)
Interest on long-term debt	(4,515)	-	-	-	(4,515)	-	(4,515)
Loss on disposal of assets	(27,663)	-	-	-	(27,663)	-	(27,663)
Total governmental activities	(11,772,374)	1,039,527	1,691,157	782,333	(8,259,357)	-	(8,259,357)
Business-type activities:							
Building Department	(63,240)	35,917	-	-	-	(27,323)	(27,323)
Detention Center	(1,151,136)	67,317	-	7,913	-	(1,075,906)	(1,075,906)
Solid Waste	(613,304)	571,565	-	-	-	(41,739)	(41,739)
Pioche Public Utility	(349,114)	352,997	-	-	-	3,883	3,883
Total business-type activities	(2,176,794)	1,027,796	-	7,913	-	(1,141,085)	(1,141,085)
Total primary governments	$ (13,949,168)	$ 2,067,323	$ 1,691,157	$ 790,246	(8,259,357)	(1,141,085)	(9,400,442)
General Revenues:							
Property taxes					3,277,602	-	3,277,602
Consolidated taxes					1,610,533	-	1,610,533
Fuel tax					1,763,861	-	1,763,861
Federal in-lieu tax					980,517	-	980,517
Gaming tax					114,306	-	114,306
Room tax					108,132	-	108,132
Marijuana fees					88,235	-	88,235
Tax penalties and costs					65,620	-	65,620
Fish and wildlife					3,224	-	3,224
Rent					108,584	-	108,584
National forest					12,597	-	12,597
Water sales					243,281	-	243,281
Investment income (loss)					67,482	535	68,017
Miscellaneous					637,461	-	637,461
Special assessment - debt					-	40,865	40,865
Capital fees					-	31,358	31,358
Special items					(323,617)	-	(323,617)
Operating transfers					(1,056,000)	1,056,000	-
Total general revenues, special items, and transfers					7,701,818	1,128,758	8,830,576
Change in net position					(557,539)	(12,327)	(569,866)
Net position - beginning of year					36,124,939	(343,627)	35,781,312
Net position - end of year					$ 35,567,400	$ (355,954)	$ 35,211,446

The notes to the financial statements are an integral part of this statement

LINCOLN COUNTY, NEVADA
BALANCE SHEET
GOVERNMENTAL FUNDS
JUNE 30, 2021

	Major Funds				
	General Fund	Road Fund	Lincoln County Water District Water Resources	Lincoln County Land Act Special Use	County Grant
ASSETS					
Pooled cash and investments	$ 2,475,533	$ 816,216	$ 2,600,625	$ 2,894,573	$ 450,730
Interest receivable	5,768	701	10,000	10,872	1,075
Taxes receivable	16,763	-	-	-	-
Due from other governments	323,513	296,039	-	-	369,708
Due from others	-	-	-	-	-
Prepaid expense	-	-	-	-	-
Interfund receivable	-	-	-	537,338	-
Due from other funds	22,634	-	-	-	-
Total assets	$ 2,844,211	$ 1,112,956	$ 2,610,625	$ 3,442,783	$ 821,513
LIABILITIES					
Accounts payable	$ 107,779	$ 128,469	$ -	$ -	$ 53,770
Accrued payroll and benefits	233,463	58,658	-	-	21,669
Unearned revenues	-	-	-	-	681,127
Due to other funds	-	-	20,895	-	-
Total liabilities	341,242	187,127	20,895	-	756,566
DEFERRED INFLOWS OF RESOURCES					
Unavailable revenue - property taxes	14,047	-	-	-	-
Unavailable revenue - grant	-	-	-	-	111,601
Total deferred inflows of resources	14,047	-	-	-	111,601
FUND BALANCE					
Nonspendable	-	-	-	-	-
Restricted for:					
Capital projects	-	-	-	-	-
Unincorporated towns	-	-	-	-	-
Multi-species conservation	-	-	-	-	-
Stabilization	137,299	-	-	-	-
Rachel Jones Cemetery	827	-	-	-	-
General government	318,428	-	-	-	-
Public safety	-	-	-	-	-
Judicial	-	-	-	-	-
Public works	-	925,829	-	-	-
Health	-	-	-	-	-
Welfare	-	-	-	-	-
Culture and recreation	-	-	-	-	-
Community support	-	-	-	-	-
Intergovernmental	-	-	-	-	-
Committed for:					
Land act	9,414	-	-	3,442,783	-
Water	66,542	-	-	-	-
Lincoln County Water District	-	-	2,589,730	-	-
General government	-	-	-	-	-
Public works	-	-	-	-	-
Planning	50,062	-	-	-	-
Flood control	38,110	-	-	-	-
Assigned for:					
Subsequent year	1,085,330	-	-	-	-
Unassigned:	782,910	-	-	-	(46,654)
Total fund balance	2,488,922	925,829	2,589,730	3,442,783	(46,654)
Total liabilities, deferred inflows of resources, and fund balance	$ 2,844,211	$ 1,112,956	$ 2,610,625	$ 3,442,783	$ 821,513

The notes to the financial statements are an integral part of this statement.

Other Governmental Funds	Totals
$ 11,577,092	$ 20,814,769
22,656	51,072
15,593	32,356
118,087	1,107,347
240,625	240,625
25,549	25,549
150,000	687,338
-	22,634
$ 12,149,602	$ 22,981,690
$ 121,911	$ 411,929
32,315	346,105
131,260	812,387
1,739	22,634
287,225	1,593,055
6,511	20,558
-	111,601
6,511	132,159
25,549	25,549
1,586,929	1,586,929
424,223	424,223
905,030	905,030
-	137,299
-	827
77,798	396,226
64,702	64,702
328,805	328,805
932,277	1,858,106
114	114
1,050,131	1,050,131
312,234	312,234
505,884	505,884
6,895	6,895
138,500	3,590,697
1,597,725	1,664,267
1,912,186	4,501,916
1,941,693	1,941,693
46,930	46,930
-	50,062
-	38,110
-	1,085,330
(1,739)	734,517
11,855,866	21,256,476
$ 12,149,602	$ 22,981,690

LINCOLN COUNTY, NEVADA
RECONCILIATION OF THE GOVERNMENTAL FUNDS BALANCE SHEET
TO THE STATEMENT OF NET POSITION
JUNE 30, 2021

Total fund balance - governmental funds	**$**	**21,256,476**
Amounts reported for governmental activities in the Statement of Net Position are different because:		
Capital assets, net of the related depreciation, are not reported in the Governmental Funds financial statements because they are not current financial resources, but they are reported in the Statement of Net Position.		22,424,930
Other long-term assets which are not available to pay for current period expenditures and, therefore, are deferred in the funds.		132,159
Certain liabilities (such as bonds payable and capital leases payable) are not reported in the Governmental Funds financial statements because they are not due and payable, but they are presented as liabilities in the Statement of Net Position.		(424,131)
The County's other post-employment benefits liabilities as well as other post-employment benefits-related deferred outflows and deferred inflows of resources are recognized in the government-wide statements and include:		
Deferred outflows from other post-employment benefits.		19,401
Total other post-employment benefits liability.		(399,732)
The County's proportionate share of net pension assets and liabilities as well as pension-related deferred outflows and deferred inflows of resources are recognized in the government-wide statements and include:		
Deferred outflows from pension activity		906,827
Net pension liability		(7,276,960)
Deferred inflows from pension activity		(1,071,570)
Total net position - governmental activities	**$**	**35,567,400**

The notes to the financial statements are an integral part of this statement.

LINCOLN COUNTY, NEVADA
STATEMENT OF REVENUES, EXPENDITURES,
AND CHANGES IN FUND BALANCES
GOVERNMENTAL FUNDS
FOR THE YEAR ENDED JUNE 30, 2021

	Major Funds			
	General Fund	Road Fund	Lincoln County Water District Water Resources	Lincoln County Land Act Special Use
Revenues:				
Taxes	$ 2,423,868	$ -	$ -	$ -
Licenses and permits	21,374	-	-	-
Intergovernmental	1,832,578	1,641,924	-	-
Charges for services	455,885	-	-	-
Fines and forfeitures	254,312	-	-	-
Special assessment	-	-	-	-
Miscellaneous	126,684	152,253	8,548	25,035
Total revenues	5,114,701	1,794,177	8,548	25,035
Expenditures:				
Current:				
General government	1,395,105	-	-	-
Public safety	1,490,824	-	-	-
Judicial	1,099,885	-	-	-
Public works	81,790	1,570,117	-	-
Health	62,309	-	-	-
Welfare	-	-	-	-
Culture and recreation	-	-	-	-
Community support	-	-	-	-
Intergovernmental	916,193	-	-	-
Capital projects	-	-	-	-
Debt service:				
Principal	-	-	-	-
Interest	-	-	-	-
Total expenditures	5,046,106	1,570,117	-	-
Excess (deficiency) of revenues over expenditures	68,595	224,060	8,548	25,035
Other financing sources (uses):				
Operating transfers in	75,000	-	-	-
Operating transfers out	(650,000)	(100,000)	(200,000)	-
Sale of capital assets	-	-	-	-
Total other financing sources (uses)	(575,000)	(100,000)	(200,000)	-
Net change in fund balance before special items	(506,405)	124,060	(191,452)	25,035
Special items:				
Disposal of ambulance operations	-	-	-	-
Net change in fund balance	(506,405)	124,060	(191,452)	25,035
Fund balance:				
Beginning of year	2,995,327	801,769	2,781,182	3,417,748
End of year	$ 2,488,922	$ 925,829	$ 2,589,730	$ 3,442,783

The notes to the financial statements are an integral part of this statement.

County Grant	Other Governmental Funds	Totals
$ -	$ 979,843	$ 3,403,711
-	5,310	26,684
2,056,007	1,581,141	7,111,650
-	252,882	708,767
-	27,649	281,961
-	243,281	243,281
2,625	531,135	846,280
2,058,632	3,621,241	12,622,334
1,204,799	925,510	3,525,414
274,706	2,433	1,767,963
-	45,305	1,145,190
229,616	192,150	2,073,673
-	186,314	248,623
220,256	511,316	731,572
238,990	347,817	586,807
-	254,222	254,222
-	136,927	1,053,120
-	283,065	283,065
-	75,283	75,283
-	7,628	7,628
2,168,367	2,967,970	11,752,560
(109,735)	653,271	869,774
4,847	523,336	603,183
-	(709,183)	(1,659,183)
-	8,500	8,500
4,847	(177,347)	(1,047,500)
(104,888)	475,924	(177,726)
-	(92,160)	(92,160)
(104,888)	383,764	(269,886)
58,234	11,472,102	21,526,362
$ (46,654)	$ 11,855,866	$ 21,256,476

LINCOLN COUNTY, NEVADA
RECONCILIATION OF THE STATEMENT OF REVENUES, EXPENDITURES AND CHANGES IN FUND BALANCES OF GOVERNMENTAL FUNDS TO THE STATEMENT OF ACTIVITIES
FOR THE YEAR ENDED JUNE 30, 2021

Net Change in Fund Balance - Governmental Funds	**$**	**(269,886)**
Amounts reported for governmental activities in the Statement of Activities are different because:		
Capital outlays to purchase or build capital assets are reported in Governmental Funds financial statements as expenditures. However, for governmental activities those costs are shown in the Statement of Net Position and allocated over the estimated useful lives as annual depreciation expenses in the Statement of Activities.		(418,165)
Property taxes and grant revenues that are collected in the time to pay obligations of the current period are reported as revenue in the fund statements. However, amounts that related to prior periods that first become available in the current period should not be reported as revenue in the statement of activities.		(27,882)
The issuance of long-term debt (e.g., bonds, leases) provides current financial resources to governmental funds, while the repayment of the principal of long-term debt consumes the current financial resources of governmental funds. Neither transaction, however, has any effect on net position. Also, governmental funds report the effect of issuance costs, premiums, discounts, and other similar items when debt is first issued, whereas these amounts are deferred and amortized in the Statement of Activities. This amount is the net effect of these differences in the treatment of long-term debt and related items.		75,283
Generally, expenditures recognized in the fund financial statements are limited to only those that use current financial resources, but expenses are recognized in the statement of activities when incurred.		42,129
Total differences between other post-employment benefits contributions recognized in the fund Statement of Revenues, Expenditures, and Changes in Fund Balances and the Statement of Activities:		
Other post-employment benefits contributions made after measurement date (2021 contributions).		19,401
Net other post-employment benefits expense.		(16,775)
Net differences between pension system contributions recognized in the fund Statement of Revenues, Expenditures, and Changes in Fund Balances and the Statement of Activities:		
Pension contributions made after measurement date (2021 contributions).		435,204
Net pension expense.		(396,848)
Change in net position of governmental activities	**$**	**(557,539)**

The notes to the financial statements are an integral part of this statement.

LINCOLN COUNTY, NEVADA
STATEMENT OF NET POSITION
PROPRIETARY FUNDS
JUNE 30, 2021

	Major Fund		Nonmajor
	Detention Center	Solid Waste	Enterprise Funds
ASSETS			
Current assets:			
Pooled cash and investments	$ 92,356	$ 563,388	$ 809,671
Accounts receivable	4,575	122,317	33,345
Interest receivable	-	100	333
Total current assets	96,931	685,805	843,349
Restricted assets:			
Cash	-	93,446	11,490
Capital assets:			
Land	-	200,000	14,000
Property, plant and equipment (net of depreciation)	749,999	814,386	969,065
Total capital assets	749,999	1,014,386	983,065
Total assets	846,930	1,793,637	1,837,904
DEFERRED OUTFLOWS OF RESOURCES			
Deferred net pension charge	267,955	20,114	36,621
Deferred total OPEB	-	-	5,728
Total deferred outflows of resources	267,955	20,114	42,349
LIABILITIES			
Current liabilities:			
Accounts payable	11,843	38,309	11,693
Accrued payroll and benefits	94,772	20,437	18,804
Customer deposits	-	-	60
Accrued compensated absences	62,387	11,294	16,232
Interfund payable	-	80,218	-
Accrued interest payable	-	11,730	1,263
Total current liabilities	169,002	161,988	48,052
Current liabilities payable from restricted assets:			
Revenue bond	-	-	3,592
Non-current liabilities:			
Accrued compensated absences	51,043	9,242	13,283
Landfill closure and postclosure costs	-	90,000	-
Interfund payable	-	607,120	-
Net pension liability	3,071,179	-	218,091
Total OPEB liability	-	-	114,131
Revenue bond	-	-	170,457
Total non-current liabilities	3,122,222	706,362	515,962
Total liabilities	3,291,224	868,350	567,606
DEFERRED INFLOWS OF RESOURCES			
Deferred net pension charge	396,852	2,760	38,051
NET POSITION			
Invested in capital assets, net of related debt	749,999	327,048	809,016
Restricted for revenue bond debt service	-	-	11,490
Unrestricted	(3,323,190)	615,593	454,090
Total net position	$ (2,573,191)	$ 942,641	$ 1,274,596

The notes to the financial statements are an integral part of this statement.

Total Enterprise Funds
$ 1,465,415
160,237
433
1,626,085
104,936
214,000
2,533,450
2,747,450
4,478,471
324,690
5,728
330,418
61,845
134,013
60
89,913
80,218
12,993
379,042
3,592
73,568
90,000
607,120
3,289,270
114,131
170,457
4,344,546
4,727,180
437,663
1,886,063
11,490
(2,253,507)
$ (355,954)

LINCOLN COUNTY, NEVADA
STATEMENT OF REVENUES, EXPENSES, AND
CHANGES IN NET POSITION
PROPRIETARY FUNDS
FOR THE YEAR ENDED JUNE 30, 2021

	Major Fund		Nonmajor
	Detention Center	Solid Waste	Enterprise Funds
Operating revenues:			
Charges for services	$ 67,317	$ 571,565	$ 388,914
Operating expenses:			
Salaries and wages	570,140	271,942	155,469
Employee benefits	400,818	94,999	86,037
Services and supplies	136,167	122,010	117,706
Closure and postclosure landfill costs	-	10,000	-
Depreciation	44,011	98,677	45,439
Total operating expenses	1,151,136	597,628	404,651
Operating income (loss)	(1,083,819)	(26,063)	(15,737)
Non-operating revenues (expenses):			
Investment income	-	127	408
Operating transfers in	1,006,000	-	255,710
Operating transfers out	-	-	(205,710)
Capital fees	-	-	31,358
Special assessment - debt	-	40,865	-
Grant	7,913	-	-
Interest expense	-	(15,676)	(7,703)
Total non-operating revenues (expenses)	1,013,913	25,316	74,063
Change in net position	(69,906)	(747)	58,326
Net position:			
Beginning of year	(2,503,285)	943,388	1,216,270
End of year	$ (2,573,191)	$ 942,641	$ 1,274,596

The notes to the financial statements are an integral part of this statement.

Total Enterprise Funds
$ 1,027,796
997,551
581,854
375,883
10,000
188,127
2,153,415
(1,125,619)
535
1,261,710
(205,710)
31,358
40,865
7,913
(23,379)
1,113,292
(12,327)
(343,627)
$ (355,954)

LINCOLN COUNTY, NEVADA
STATEMENT OF CASH FLOWS
PROPRIETARY FUNDS
FOR THE YEAR ENDED JUNE 30, 2021

	Major Fund		Nonmajor
	Detention Center	Solid Waste	Enterprise Funds
Cash flows from operating activities:			
Cash received from customers	$ 211,317	$ 580,467	$ 389,434
Cash paid for services and supplies	(135,518)	(91,226)	(122,151)
Cash paid for salaries and benefits	(1,050,533)	(359,406)	(245,136)
Net cash provided (used) by operating activities	(974,734)	129,835	22,147
Cash flows from noncapital financing activities:			
Operating transfers in/out	1,006,000	-	50,000
Cash flows from capital and related financing activities: financing activities:			
Purchases of capital assets	(6,792)	(141,804)	(23,635)
Capital fees	-	-	31,358
Special assessment - debt	-	40,865	-
Grant	7,913	-	-
Interfund payable	-	(83,583)	-
Debt retirement	-	-	(3,440)
Interest paid	-	(12,120)	(7,728)
Net cash provided (used) by capital and related financing activities	1,121	(196,642)	(3,445)
Cash flows from investing activities:			
Investment income	-	160	926
Net change in cash and cash equivalents	32,387	(66,647)	69,628
Cash:			
Beginning of year	59,969	723,481	751,533
End of year	$ 92,356	$ 656,834	$ 821,161
Reconciliation of operating income (loss) to net cash provided (used) by operating activities:			
Operating income (loss)	$ (1,083,819)	$ (26,063)	$ (15,737)
Adjustments to reconcile operating income (loss) to net cash provided (used) by operating activities:			
Depreciation expense	44,011	98,677	45,439
(Increase) decrease in accounts receivable	144,000	8,902	550
(Increase) decrease in deferred outflows net pension charge	131,589	(48)	(353)
Increase (decrease) in accounts payable	649	30,784	(4,445)
Increase (decrease) in accrued payroll and benefits	(117,235)	2,539	3,414
Increase (decrease) in compensated absences	(20,404)	6,033	(906)
Increase (decrease) in land fill costs	-	10,000	-
Increase (decrease) in net pension liability	(55,695)	-	(6,989)
Increase (decrease) in deferred inflows net pension charge	(17,830)	(989)	1,979
Increase (decrease) in total OPEB liability	-	-	(775)
Increase (decrease) in customer deposits	-	-	(30)
Total adjustments	109,085	155,898	37,884
Net cash provided (used) by operating activities	$ (974,734)	$ 129,835	$ 22,147

The notes to the financial statements are an integral part of this statement.

Total Enterprise Funds
$ 1,181,218
(348,895)
(1,655,075)
(822,752)
1,056,000
(172,231)
31,358
40,865
7,913
(83,583)
(3,440)
(19,848)
(198,966)
1,086
35,368
1,534,983
$ 1,570,351
$ (1,125,619)
188,127
153,452
131,188
26,988
(111,282)
(15,277)
10,000
(62,684)
(16,840)
(775)
(30)
302,867
$ (822,752)

LINCOLN COUNTY, NEVADA
FIDUCIARY FUNDS
STATEMENT OF NET POSITION
JUNE 30, 2021

	Custodial Funds
ASSETS	
Pooled cash and investments	$ 5,039,494
Interest receivable	8,491
Taxes receivable	29,139
Due from other governments	271,338
Total assets	5,348,462
LIABILITIES	
Accounts payable and other liabilities	342
Due to other governments	1,765,785
Unavailable revenue - taxes	23,742
Total liabilities	1,789,869
NET POSITION	
Restricted for pool participants	3,209,960
Restricted for other governments	244,675
Restricted for individuals	103,958
Total net position	$ 3,558,593

The notes to the financial statements are an integral part of this statement.

LINCOLN COUNTY, NEVADA
FIDUCIARY FUNDS
STATEMENT OF CHANGES IN NET POSITION
FOR THE YEAR ENDED JUNE 30, 2021

	Custodial Funds
ADDITIONS:	
Taxes:	
Total taxes	$ 4,075,361
Licenses and permits:	
Total licenses and permits	3,921
Charges for services:	
Total charges for services	1,760,096
Fines and forfeitures:	
Total fines and forfeited bail	26,801
Intergovernmental:	
Total intergovernmental	591,883
Miscellaneous:	
Total miscellaneous	36,915
Total revenue	6,494,977
DEDUCTIONS:	
Payments to other governments	6,325,566
Change in net position	169,411
Net position - beginning of year	3,389,182
Net position - end of year	$ 3,558,593

The notes to the financial statements are an integral part of this statement.

NOTE A. SUMMARY OF SIGNIFICANT ACCOUNTING POLICIES

The County financial statements are prepared in accordance with generally accepted accounting principles (GAAP). The Governmental Accounting Standards Board (GASB) is responsible for establishing GAAP for state and local governments through its pronouncements (Statements and Interpretations).

1. Reporting Entity

Lincoln County, Nevada, is governed by an elected five-member board. As required by generally accepted accounting principles, these financial statements present Lincoln County, Nevada (the primary government), and its component units. Blended component units, although legally separate entities are, in substance, part of the County's operations. Thus, blended component units are appropriately presented as funds of the primary government.

2. Blended Component Units

Component units are legally separate organizations for which the County is financially accountable. Lincoln County Water District, Alamo Town, Panaca Town, and Pioche Town are all component units that are part of the County's reporting entity because the County is financially accountable for these entities. Financial accountability is determined primarily by the fact that as the governing body, the County's Board of Commissioners can impose its will on significant aspects of the operations of these entities. These entities are presented as blended component units since the operations of these entities are considered part of County operations.

3. Description of Government-Wide Financial Statements

The government-wide financial statements (i.e., the Statement of Net Position and the Statement of Activities) report information on all of the nonfiduciary activities of the County and its component units. All fiduciary activities are reported only in the fund financial statements. *Governmental activities,* which normally are supported by taxes, intergovernmental revenues, and other nonexchange transactions, are reported separately from *business-type activities*, which rely to a significant extent on fees and charges to external customers for support.

4. Basis of Presentation - Government-Wide Financial Statements

While separate government-wide and fund financial statements are presented, they are interrelated. The governmental activities column incorporates data from governmental funds, while business-type activities incorporate data from the County's enterprise funds. Separate financial statements are provided for governmental funds, proprietary funds (enterprise funds), and fiduciary funds, even though the fiduciary funds are excluded from the government-wide financial statements. As a general rule, the effect of interfund activity has been eliminated from the government-wide financial statements.

The Statement of Net Position presents the consolidated financial position of the County at year-end, in separate columns, for both governmental and business-type activities.

The Statement of Activities demonstrates the degree to which the direct expenses of a given function or programs are offset by program revenues. Direct expenses are those that are specifically associated with a program or service and are, therefore, clearly identifiable to a particular function. Amounts reported as program revenues include 1) charges to customers or applicants who purchase, use, or directly benefit from goods, services, or privileges provided by a given function or segment and 2) grants and contributions (including special assessments) that are restricted to meeting the operational or capital requirements of a particular function or segment. Taxes and other revenues properly not included among program revenues are reported instead as general revenues. This statement provides a net cost or net revenue of specific programs and functions within the County. Those functions with a net cost are generally dependent on general-purpose tax revenues, such as property tax, to remain operational.

NOTE A. SUMMARY OF SIGNIFICANT ACCOUNTING POLICIES (Continued)

5. Basis of Presentation - Fund Financial Statements

The fund financial statements provide information about the County's funds, including its fiduciary funds and blended component units. Separate statements for each fund category – governmental, proprietary (enterprise), and fiduciary – are presented. The emphasis of fund financial statements is on major governmental and enterprise funds, each displayed in a separate column. All remaining governmental and enterprise funds are aggregated and reported as nonmajor funds. Major individual governmental and enterprise funds are reported as separate columns in the fund financial statements.

For the year ended June 30, 2021, the County adopted GASB Statement No. 84, *Fiduciary Activities*. The implementation of this standard established accounting and financial reporting for fiduciary activities. Agency funds are now classified as custodial funds. The custodial funds are presented on a net position basis rather than an asset and liability basis. The external investment pool fund has been reclassified from a trust fund to a custodial fund. As a result of implementation of GASB 84 beginning net position of the custodial fund has been restated from $ 0 to $3,389,182.

The County reports the following major governmental funds:

General Fund - The General Fund is the County's primary operating fund. It accounts for all financial resources and operating costs of the general County, except those accounted for in another fund.

Road Fund - The Road Fund is used to account for gas tax revenues allocated for the construction, repair and maintenance of County roads.

Lincoln County Water District Water Resources Fund - The Lincoln County Water District Water Resources Fund is used to account for general activities of the Water District, a blended component unit of the government.

Lincoln County Land Act Special Use Fund - The Lincoln County Land Act Special Use Fund is used to account for land sale monies to be spent per ordinances.

County Grant Fund - The County Grant Fund is used to account for monies received to be spent on a specified purpose.

The County reports the following major enterprise funds:

Detention Center Fund - The Detention Center fund is used to account for the activities of the Lincoln County Detention Center, providing detention services for local governments within Nevada.

Solid Waste Fund– The Solid Waste fund is used to account for solid waste disposal throughout the County and land fill operations.

Additionally, the County reports the following fiduciary fund:

Custodial Funds – The Custodial Fund is used to account for assets held by the County in a custodial capacity for others and cannot be used to support the government's own programs.

During the course of operations, the County has activity between funds for various purposes. Any residual balances outstanding at year end are reported as due from/to other funds and advances to/from other funds. While these balances are reported in fund financial statements, certain eliminations are made in the preparation of the government-wide financial statements. Balances between the funds included in the governmental activities are eliminated so that only the net amount is included as internal balances in the governmental activities column. Similarly, balances between the funds included in business-type activities (i.e., enterprise funds) are eliminated so that only the net amount is included as internal balances in the business-type activities column.

NOTE A. SUMMARY OF SIGNIFICANT ACCOUNTING POLICIES (Continued)

5. Basis of Presentation - Fund Financial Statements (Continued)

Further, certain activity occurs during the year involving transfers of resources between funds. In fund financial statements these amounts are reported as transfers in/out. While reported in fund financial statements, certain eliminations are made in the preparation of government-wide financial statements. Transfers between the funds included in governmental activities are eliminated so that only the net amount is included as transfers in the governmental activities column. Similarly, balances between the funds included in business-type activities are eliminated so that only the net amount is included as transfers in the business-type activities column.

6. Measurement Focus and Basis of Accounting

The accounting and financial reporting treatment is determined by the applicable measurement focus and basis of accounting. Measurement focus indicates the type of resources being measured such as current financial resources or economic resources. The basis of accounting indicates the timing of events for recognition in the financial statements.

The government-wide financial statements are reported using the economic resources measurement focus and the accrual basis of accounting, as are the proprietary fund financial statements. Revenues are recorded when earned and expenses are recorded when a liability is incurred, regardless of the timing of related cash flows. Property taxes are recognized as revenues in the year for which they are levied. Grants and similar items are recognized as revenue as soon as all eligibility requirements imposed by the provider have been met.

The governmental fund financial statements are reported using the current financial resources measurement focus and the modified accrual basis of accounting. Revenues are recognized as soon as they are both measurable and available. Gross receipts and sales taxes are considered “measurable” when in the hands of intermediary collecting governments and are then recognized as revenue. The government considers revenues to be “available” if they are collected within 60 days of the end of the current fiscal period. Anticipated refunds of taxes are recorded as liabilities and reductions of revenue when they are measurable and the payment seems certain. In general, expenditures are recorded when liabilities are incurred. The exception to this rule is that principal and interest on debt service, as well as liabilities related to compensated absences and claims and judgments, are recorded when payment is due. General capital asset acquisitions are reported as expenditures in governmental funds. Issuance of long-term debt and acquisitions under capital leases are reported as other financing sources.

The major revenue sources of the County include consolidated taxes (including sales tax), fuel taxes, intergovernmental revenue, and property taxes. Property taxes, sales taxes, licenses, and interest associated with the current fiscal period are all considered to be susceptible to accrual and so have been recognized as revenues of the current fiscal period. Expenditure-driven grants are recognized as revenue when the qualifying expenditures have been incurred and all other eligibility requirements have been met, and the amount is received during the period or within the availability period for this revenue source (within 60 days of year-end). All other revenue items are considered to be measurable and available only when cash is received by the County.

The proprietary funds are reported using the economic resources measurement focus and the accrual basis of accounting. Proprietary funds distinguish operating revenues and expenses from non-operating items. Operating revenues and expenses generally result from providing services and producing and delivering goods in connection with a proprietary fund’s principal ongoing operations. The principal operating revenues of the Pioche Public Utility funds are customer charges. Operating revenues for the Building fund come from charges for services for building inspections and permits. The Detention Center receives revenue for housing prisoners of other governments. Expenses are those required to provide the service. The Solid Waste fund is used to account for solid waste disposal throughout the County and landfill operations. All revenues and expenses not meeting this definition are reported as non-operating revenues and expenses.

The fiduciary funds have no measurement focus but utilizes the accrual basis of accounting for reporting its assets and liabilities.

NOTE A. SUMMARY OF SIGNIFICANT ACCOUNTING POLICIES (Continued)

7. Budgetary Basis of Accounting

Annual budgets are adopted on a basis consistent with generally accepted accounting principles for governmental funds.

a. The statutes provide for the following timetable in adoption of budgets:

(i) Before April 15, the County submits to the Nevada State Department of Taxation a tentative budget for the upcoming fiscal year. The tentative budget includes proposed expenditures and the means to finance them.

(ii) A public hearing must be held by the County Commissioners no sooner than the third Monday in May and no later than the last day in May. Notice of the public hearing must be published once in the local newspaper not more than 14 nor less than 7 days before the hearing.

(iii) On or before June 1, the County Commissioners must adopt a final budget.

b. NRS 354.598005 (1) - provides that the County Commissioners may augment the budget at any time by a majority vote of the Commissioners providing the Commission publish notice of its intention to act in a newspaper of general circulation in the County at least three days before the date set for adoption of the resolution.

c. Nevada Revised Statute 354.598005 (5) allows appropriations to be transferred between functions, funds or contingency accounts if such a transfer does not increase the total appropriation for any fiscal year and is not in conflict with other statutory provisions. The County Auditor may transfer appropriations within any function. The County Auditor may also transfer appropriations between functions or programs within a fund, if the County Commissioners are advised of the action at the next regular meeting; and the action is recorded in the official minutes of the meeting. The County Commissioners may authorize the transfer of appropriations between funds or from the contingency account if the County Commissioners announce the transfer of appropriations at a regularly scheduled meeting and sets forth the exact amounts to be transferred and the accounts, functions, programs and funds affected. The County Commissioners must also set forth its reasons for the transfer; and the action must be recorded in the official minutes of the meeting.

d. Statutory regulations require budget control to be exercised at the function level within the funds.

e. The following funds were augmented during the year: County Grants Fund and Detention Center Enterprise Fund had an automatic budget augmentation for grant revenue. The following funds were augmented during the year for higher than anticipated revenues: Resource Development Authority, Transportation, Airport, District Court Specialty Court, Demerit Point Reduction, and the Pioche Public Utility Sewer and Electric Funds.

f. Generally, budgets for all funds are adopted in accordance with generally accepted accounting principles. Budgeted amounts reflected in the accompanying financial statements recognize amendments made during the year.

g. All appropriations lapse at the end of the fiscal year.

NOTE A. SUMMARY OF SIGNIFICANT ACCOUNTING POLICIES (Continued)

8. Assets, Liabilities, Deferred Outflows/Inflows of Resources, and Net Position/Fund Balance

a. Cash and Cash Equivalents

The County's cash and cash equivalents are considered to be cash on hand, demand deposits, and short term investments with original maturities of three months or less from the date of acquisition. Cash includes cash deposited in interest-bearing accounts at banks and cash in the custody of fiscal agents of the County.

b. Investments

Investments are stated at fair value on the Balance Sheet. Fair value is the amount at which a financial instrument could be exchanged in a current transaction between willing parties other than in a forced or liquidation sale. Changes in the fair value of County investments are part of investment income which is included in revenue from local sources on the Statement of Activities and the Statement of Revenues, Expenditures, and Changes in Fund Balances of governmental funds (**see Note D1**).

Nevada Revised Statutes authorize the County to invest in:

1. Obligations of the U.S. Treasury and U.S. Agencies in which the maturity dates do not exceed more than 10 years from the date of purchase.

2. Negotiable certificates of deposit issued by commercial banks or insured savings and loan associations (those over $250,000 must be fully collateralized).

3. Negotiable notes or short-term negotiable bonds issued by local governments within Nevada.

4. Eligible bankers' acceptances that do not exceed 270 days maturity and do not exceed 20 percent of the portfolio.

5. Commercial paper with a rating of A-1 or P-1 that does not exceed 240 days maturity and does not exceed 20 percent of the portfolio.

6. The State of Nevada's Local Government Investment Pool.

7. Repurchase agreements that are collateralized at 102 percent of the repurchase price and do not exceed 90 days maturity. Securities used for collateral must meet the criteria listed above.

8. Money market mutual funds which are rated as "AAA" or its equivalent and invest only in securities issued by the Federal Government, U.S. Agencies, or repurchase agreements fully collateralized by such securities.

9. Obligations issued or unconditionally guaranteed by the International Bank for Reconstruction and Development or obligations publicly issued in the United States by a foreign financial entity registered with the Securities and Exchange Commission, denominated in dollars with a maturity of 5 years or less with a rating of "AA" or better.

The County has not adopted a formal investment and depository policy that further limits allowable investments and deposits.

NOTE A. SUMMARY OF SIGNIFICANT ACCOUNTING POLICIES (Continued)

8. Assets, Liabilities, Deferred Outflows/Inflows of Resources, and Net Position/Fund Balance (Continued)

c. Property Tax

Taxes on real property are levied on July 1st of each year and are due on the third Monday in July. They can be paid in quarterly installments in August, October, January, and March. In the event of nonpayment, the County Treasurer is authorized to hold the property for two years, subject to redemption upon payment of taxes, penalties, and costs, together with interest at a rate of 10 percent per year from the date the taxes were due until paid. If delinquent taxes are not paid within the two year redemption period, the County Treasurer obtains a deed to the property free of all encumbrances. Upon receipt of a deed, the County Treasurer may sell the property to satisfy the tax lien.

Article X, Section 2 of the Constitution of the State of Nevada limits the total taxes levied by all overlapping governmental units within the boundaries of any County (i.e., the County, the County School District, the State and any other City, Town, or Special District) to an amount not to exceed $5 per $100 of assessed valuation of the property being taxed. The Nevada Legislature enacted provisions whereby the combined overlapping tax rate was limited to $3.64 per $100 of assessed valuation. The Nevada legislature passed a property tax abatement law in 2005 that generally caps increases in property tax on owner-occupied residential property to 3% and 8 % per year for all other property.

d. Inventories and Prepaid Items

Inventories are valued at cost using the first-in/first-out (FIFO) method. The cost of such inventories is recorded as expenditures/expenses when consumed rather than when purchased. There were no material inventories reported in the government-wide financial statements.

Certain payments to vendors reflect costs applicable to future accounting periods and are recorded as prepaid items in both the government-wide and fund financial statements. Prepaids at year end included advance payments of rent and insurance.

e. Restricted Assets

Certain cash assets of the Enterprise Funds are from revenue for specific use by the Enterprise Funds and are classified as restricted assets because their use is restricted by agreement (**see Note D5).**

f. Capital Assets

Capital assets, which include property, plant and equipment, and infrastructure assets (e.g., roads, bridges, sidewalks, and similar items), are reported in the applicable governmental or business-type activities columns in the government-wide financial statements. Capital assets are defined by the County as assets with an initial individual cost of more than $500 and an estimated useful life in excess of one year.

If purchased or constructed, capital assets are valued at cost where historical records are available, and, if no historical record exists at estimated cost. Capital assets are updated for additions and retirements during the year. Donated capital assets are valued at their estimated value as of the date of donation. The costs of normal maintenance and repairs that do not add to the value of the asset or materially extend the life of the asset are not capitalized.

NOTE A. SUMMARY OF SIGNIFICANT ACCOUNTING POLICIES (Continued)

8. Assets, Liabilities, Deferred Outflows/Inflows of Resources, and Net Position/Fund Balance (Continued)

f. Capital Assets (Continued)

Land and construction in progress are not depreciated. The other property, plant and equipment of the primary government are depreciated using the straight line method over the following estimated useful lives:

Capital Assets	Years
Vehicles	10
Equipment	5-20
Buildings and Improvements	20-50
Infrastructure	25-50

The County is required to report and depreciate new infrastructure assets. Infrastructure assets include roads, bridges, underground pipe (other than related to utilities), traffic signals, etc. Neither their historical cost nor related depreciation has historically been reported in the financial statements. The County is required to capitalize and report its major general infrastructure assets acquired in fiscal years ending after June 30, 1980. In addition, infrastructure assets acquired before June 30, 1980, that received significant reconstruction must be capitalized.

g. Deferred Outflows/Inflows of Resources

In addition to assets, the statement of financial position will sometimes report a separate section for deferred outflows of resources. This separate financial statement element, deferred outflows of resources, represents consumption of net position that applies to a future period(s) and so will not be recognized as an outflow of resources (expense/expenditure) until then. Deferred outflows include the County's pension and OPEB related contributions subsequent to the measurement date but before the end of the fiscal year and changes in the County's proportionate share of the net pension liability.

In addition to liabilities, the statement of financial position will sometimes report a separate section for deferred inflows of resources. This separate financial statement element, deferred inflows of resources, represents an acquisition of net position that applies to a future period(s) and so will not be recognized as an inflow of resources (revenue) until that time. The County has only one type of item, which arises only under a modified accrual basis of accounting, which qualifies for reporting in this category. Accordingly, the item, unavailable revenue, is reported only in the governmental funds balance sheet. The governmental funds report unavailable revenues from one source, property taxes. This amount is deferred and recognized as an inflow of resources in the period that the amounts become available.

Deferred inflows of resources represent an acquisition of net positon that applies to a future period and will not be recognized as an inflow of resources (revenue) until that time. The difference between projected and actual experience and investment earnings are related to the deferred inflows of pensions and the calculation of net pension liability reported on the statement of net position.

For purposes of measuring the net pension liability, deferred outflows of resources and deferred inflows of resources related to pensions, and pension expense, information about the fiduciary net position of the Public Employees' Retirement System of Nevada (PERS) and additions to/deductions from PERS's fiduciary net position have been determined on the same basis as they are reported by PERS. For this purpose, benefit payments are recognized when due and payable in accordance with the benefit terms. Investments are reported at fair value.

For purposes of measuring the total other post-employment benefits (OPEB) liability, deferred outflows of resources and deferred inflows of resources related to OPEB, and OPEB expense, information about the fiduciary net position of the Public Employees' Benefit Plan of Nevada (PEBP) and additions to/deductions from PEBP's fiduciary net position have been determined on the same basis as they are reported by PEBP. For this purpose, benefit payments are recognized when due and payable in accordance with the benefit terms. Investments, if any, are reported at fair value.

NOTE A. SUMMARY OF SIGNIFICANT ACCOUNTING POLICIES (Continued)

8. Assets, Liabilities, Deferred Outflows/Inflows of Resources, and Net Position/Fund Balance (Continued)

h. Governmental Fund Balances:

In the governmental fund financial statements, fund balances are classified as follows:

(i) **Nonspendable –** Amounts that cannot be spent either because they are in a nonspendable form or because they are legally or contractually required to be maintained intact, such as inventories and prepaids.

(ii) **Restricted –** Amounts that can be spent only for a specific purpose because of the state or federal laws, or externally imposed conditions by grantors or creditors.

(iii) **Committed** –These amounts can only be used for specific purposes as set forth by the County Commissioners. The Commissioners must take formal action (vote approval by the majority), in order to establish an ending fund balance commitment for any specific purpose. Formal Commission action is also required to modify or rescind an established commitment. To be reported as committed, amounts cannot be used for any other purpose unless the Commission takes the same highest-level action to remove or change the constraint.

(iv) **Assigned –** Assignments are neither restrictions nor commitments and represent the County's intent to use funds for a specific purpose. These assignments, however, are not legally binding and are meant to reflect intended future use of the County's ending fund balance. Intent can be expressed by the County Commissioners or by the County Auditor.

(v) **Unassigned –** All amounts not included in other classifications.

i. Fund Balance Flow Assumption

Sometimes the County will fund outlays for a particular purpose from both restricted and unrestricted resources (the total of committed, assigned, and unassigned fund balance.) When fund balance resources are available for a specific purpose in more than one classification, it is the County's policy to use the most restrictive funds first in the following order: restricted, committed, assigned, and unassigned as they are needed.

j. Net Position Policies

In the government-wide statements, net position on the Statement of Net Position includes the following:

(i) **Invested in Capital Assets, Net of Related Debt**

This is the component of net position that reports the difference between capital assets less both the accumulated depreciation and the outstanding balance of debt, excluding unexpended proceeds, that is directly attributable to the acquisition, construction, or improvement of those assets.

(ii) **Restricted Assets**

This is the component of net position that reports the constraints placed on the use of assets by either external parties and/or enabling legislation. Currently, the County restricts assets as follow:

a) NRS 354.598155 Special Ad Valorem Capital Projects
b) NRS 354.6113 Capital Projects Fund
c) NRS 365.190 Road Improvements
d) NRS 354.6115 Budget Stabilization
e) NRS 269 Unincorporated Towns

NOTE A. SUMMARY OF SIGNIFICANT ACCOUNTING POLICIES (Continued)

8. Assets, Liabilities, Deferred Outflows/Inflows of Resources, and Net Position/Fund Balance (Continued)

j. Net Position Policies (Continued)

(iii) **Unrestricted**

This is the component of net position that is the difference between the assets and liabilities not reported in Invested in Capital Assets, Net of Related Debt and Restricted Assets.

(iv) **Negative Net Position**

Governmental Account Standards require employers to record their proportionate share of the fiduciary net pension liability on the County's Statement of Net Position. The effect of this results in negative unrestricted net position. The County makes contributions to the Public Employees' Retirement System on behalf of its employees. Statute indicates the County has no requirement to pay for the County's share of the unfunded liability.

k. Net Position Flow Assumption

Sometimes the County will fund outlays for a particular purpose from both restricted (e.g., restricted bond or grant proceeds) and unrestricted resources. In order to calculate the amounts to report as restricted – net position and unrestricted – net position in the government-wide and proprietary fund financial statements, a flow assumption must be made about the order in which the resources are considered to be applied. It is the County's policy to consider restricted – net position to have been depleted before unrestricted – net position is applied.

l. Comparative Data/Reclassifications

Comparative total data for the prior year has been presented in selected sections of the accompanying financial statements in order to provide an understanding of the changes in the County's financial position and operations. Also, certain amounts presented in the prior year data have been reclassified in order to be consistent with the current year's presentation.

m. Use of Estimates

The preparation of financial statements in conformity with generally accepted accounting principles requires management to make estimates and assumptions that affect the reported amounts of assets and liabilities and disclosures of contingent assets and liabilities at the date of the financial statements and the reported amounts of revenues and expenses during the period. Actual results could differ from those estimates.

n. Budgetary Stabilization

It is the County's policy to determine the balance or reserve as reasonable and necessary to carry out the purposes of the stabilization fund on a yearly basis. NRS 354.6115 authorizes the creation of a fund to stabilize operations of local governments and mitigate effects of natural disaster. The intent of this policy is to include a portion of the General Fund budgeted ending fund balance that will be restricted to stabilization pursuant to NRS 354.6115. Fund balance that is restricted to stabilization can be used after approval by the board of County Commissioners when total actual revenue falls short of the total anticipated revenue in the General Fund for the fiscal year in which the County uses the money.

NOTE A. SUMMARY OF SIGNIFICANT ACCOUNTING POLICIES (Continued)

9. Revenues and Expenditures/Expenses

a. Compensated Absences

Vested or accumulated vacation and sick leave that is expected to be liquidated with expendable available financial resources is reported as an expenditure and a fund liability of the governmental fund that will pay it. Amounts of vested or accumulated vacation leave that are not expected to be liquidated with expendable available financial resources are reported in the government-wide financial statements. No expenditure is reported for these amounts in the fund financial statements (**see Note D6**). Vacation leave and sick leave included in accrued liabilities and recorded as expenditures in governmental fund types is the amount normally liquidated from "available spendable resources."

In proprietary funds, compensated absences are recorded when the liabilities are incurred. In governmental funds, the current portion is recorded as payroll expenditure. The estimated long-term liability for compensated absences is accounted for in the government-wide financial statements.

b. Long-term Obligations

In the government-wide financial statements and proprietary fund types in the fund financial statements, long-term debt and other long-term obligations are reported as liabilities in the applicable governmental activities, business-type activities, or proprietary fund type Statement of Net Position. Bond premiums and discounts are deferred and amortized over the life of the bonds using the straight-line method. Bonds payable are reported net of the applicable bond premium or discount. Bond issuance costs are expensed when incurred.

In the fund financial statements, governmental fund types recognize bond premiums and discounts, as well as bond issuance costs, during the current period. The face amount of debt issued is reported as other financing sources. Premiums received on debt issuances are reported as other financing sources while discounts on debt issuances are reported as other financing uses. Issuance costs, whether or not withheld from the actual debt proceeds received, are reported as debt service expenditures.

c. Proprietary Funds Operating and Nonoperating Revenues and Expenses

Proprietary funds distinguish operating revenues and expenses from nonoperating items. Operating revenues and expenses generally result from providing services and producing and delivering goods in connection with a proprietary fund's principal ongoing operations. The principal operating revenues of the enterprise funds are charges to customers for sales and services. Operating expenses for enterprise funds include the cost of sales and services, administrative expenses, and depreciation on capital assets. All revenues and expenses not meeting this definition are reported as nonoperating revenues and expenses.

NOTE B. RECONCILIATION OF GOVERNMENT-WIDE AND FUND FINANCIAL STATEMENTS

1. Explanation of certain differences between the governmental funds Balance Sheet and the government-wide Statement of Net Position

The governmental fund balance sheet includes reconciliation between fund balances - total governmental funds and net position - governmental activities as reported in the government-wide Statement of Net Position. One element of the reconciliation explains that "certain liabilities (such as bonds payable and capital leases payable) are not reported in the Governmental funds financial statements because they are not due and payable, but they are presented as liabilities in the Statement of Net Position." The details of this difference are as follows:

Interest payable	$ (1,372)
Capital lease payable	(33,440)
Compensated absences	(389,319)
Net adjustment to reduce fund balance - total governmental funds to arrive at net position - governmental activities	$ (424,131)

2. Explanation of certain differences between the governmental funds Statement of Revenues, Expenditures, and Changes in Fund Balances and the government-wide Statement of Activities

The governmental fund Statement of Revenues, Expenditures, and Changes in Fund Balances includes a reconciliation between net changes in fund balances - total governmental funds and changes in net position of governmental activities as reported in the government-wide Statement of Activities. One element of that reconciliation explains that "Capital outlays to purchase or build capital assets are reported in Governmental Funds financial statements as expenditures. However, for governmental activities those costs are shown in the statement of net position and allocated over their estimated useful lives as annual depreciation expense in the statement of activities." The details of this difference are as follows:

Capital outlay	$ 1,136,143
Disposal of ambulance operations	(231,457)
Book value of disposed assets	(36,163)
Depreciation expense	(1,286,688)
Net adjustment to decrease net changes in fund balances - total governmental funds to arrive at changes in net position of governmental activities	$ (418,165)

Another element of that reconciliation states that "Generally, expenditures recognized in the fund financial statements are limited to only those that use current financial resources, but expenses are recognized in the Statement of Activities when incurred." The details of this difference are as follows:

Accrued interest	$ 11,287
Compensated absences	30,842
Net adjustment to increase net change in fund balances – governmental funds to arrive at change in net position of governmental activities	$ 42,129

NOTE C. STEWARDSHIP, COMPLIANCE, AND ACCOUNTABILITY

1. Compliance and Accountability

The County conformed to significant statutory requirements regarding financial administrations except as follows:

Per NRS 354.626, the County is required to report expenditures that exceeded budgeted appropriations at the function level for the General Fund, Special Revenue Funds, and Capital Project Funds. Enterprise funds may not exceed budget appropriations at the fund level. For the year ending June 30, 2021, the County had the following expenditures over appropriations that are required to be reported.

General Fund – Health function	$	479
Lincoln County Water District General	$	24,420
Detention Center Enterprise Fund	$	18,832
Solid Waste Enterprise Fund	$	37,470

The over expenditures in the funds relate to expenses that came in after year end that caused the functions to go over budget.

2. Deficit Fund Balance/Net Position

Legal Aid Services Fund	$	1,739
County Grants Fund	$	46,654
Detention Center Enterprise Fund	$	2,573,191
Building Department Enterprise Fund	$	66,681

The deficit net position of the Detention Center and Building Department Enterprise Funds are due to the individual fund's proportionate share of the net pension liability of the Public Employees' Retirement System of the State of Nevada. See **Note D-13** of the financial statement. The deficit in the County Grants Fund is due to grant reimbursement timing resulting in unavailable revenues. See **Note D-10** of the financial statement.

NOTE D. DETAILED NOTES ON ALL FUNDS

1. Pooled Cash and Investments

The County maintains a cash and investment pool that is available for use by all funds under the custody of the County Treasurer. At June 30, 2021, this pool is displayed in the Statement of Net Position and major and other governmental funds on the governmental funds balance sheet as "Pooled Cash and Investments."

A reconciliation of cash and investments as shown in the Statement of Net Position is as follows:

Cash in the hands of officers	$	100,632
Carrying amount of deposits		6,526,798
Fair value of investments		20,797,184
Total		$27,424,614

NOTE D. DETAILED NOTES ON ALL FUNDS (Continued)

1. Pooled Cash and Investments (Continued)

A reconciliation of cash and investments as for the County is as follows:

Government-wide pooled cash and investments	$22,280,184
Restricted cash	104,936
Total primary government	22,385,120
Fiduciary funds	5,039,494
Total reporting entity	$27,424,614

Except for financial reporting purposes, the cash balances of $5,039,494 in the Fiduciary Funds are not normally considered part of the County's pooled cash and investments. These amounts represent cash held in a fiduciary capacity by the County and cannot be used in the County's normal operations.

The cash and investment pool is available for use by all funds of the County. Cash and investments under the custody of the County Treasurer are invested as a pool. The County Treasurer may invest the money of the investment pool in investments which have been authorized as investments by Nevada Revised Statutes. (**See Note A8b**)

Investment gain or loss is apportioned to the funds within the pool monthly based on the average balance invested for the month.

Cash and investment are subject to the following risks:

Interest Rate Risk: Interest rate risk is the risk of possible reduction in the value of a security, especially a bond, resulting from the rise in interest rates. Nevada Revised Statutes limits bankers' acceptances to 180 days of maturities, repurchase agreements to 90 days, U.S. Treasuries and Agencies to less than 10 years, and commercial paper to 270 days maturity. The approximate weighted average maturity of investments in the Lincoln County Treasurer's investment pool was 2.50 years.

As of June 30, 2021, monies held in the Lincoln County Treasurer's cash and investment pool are categorized as follows:

		Investment Maturities (In Years)		
Investment Type	Fair Value	Less than 1	1-5	6+
U.S. Treasury notes	$ 2,530,141	$ 250,990	$ 2,279,151	$ 0
U.S. Agency backed mortgages	1,932,623	325,107	440,526	1,166,990
Corporate notes	3,346,677	1,130,384	2,216,293	0
Money market funds	440,216	440,216	0	0
Negotiable certificates of deposit	12,547,527	3,359,822	9,187,705	0
Total Investments	$20,797,184	$ 5,506,519	$ 14,123,675	$ 1,166,990

Governmental Accounting Standards require fair value reporting of all investments. The fair value of the County's investments was determined by market quotes.

NOTE D. DETAILED NOTES ON ALL FUNDS (Continued)

1. Pooled Cash and Investments (Continued)

Credit Risk: Credit risk is the risk that an issuer or other counterparty to an investment will not fulfill its obligation and is a function of the credit quality ratings of its investments. The Nevada Revised Statutes limits investments instruments by their credit risk **(Note A8a)**.

As of June 30, 2021, monies held in the Lincoln County Treasurer's cash and investment pool are categorized as follows:

		Quality Ratings by Moody's							
Investment Type	Fair Value	Aaa	Aa1	Aa3	A1	A2	A3	Baa1	N/A
U.S. Treasury Note	$ 2,530,141	$ 2,530,141	$ -	$ -	$ -	$ -	$ -	$ -	$ -
Corporate Notes	1,932,623	1,932,623	-	-	-	-	-	-	
U.S. Agency Backed Mortgages	3,346,677	-	-	301,776	355,691	1,030,578	1,205,001	-	453,631
Money Market Funds	440,216	151,581	-	-	-	-	-	-	288,635
Negotiable Certificates of Deposit	12,547,527	-	584,365	1,236,579	987,453	160,691	1,297,822	420,955	7,859,662
	$20,797,184	$4,614,345	$584,365	$1,538,355	$1,343,144	$1,191,269	$2,502,823	$420,955	$8,601,928

Custodial Credit Risk: Custodial credit risk is the risk that in the event of a bank or brokerage failure, the County's deposits may not be returned. The County's bank deposits are generally covered by FDIC insurance and are collateralized by the Office of the State Treasurer/Nevada Collateral Pool. At year-end, the County's carrying amount of deposits was $6,526,798 and the bank balance was $6,630,736. Of the bank balance, $500,000 was covered by federal depository insurance. Of the remaining balance, $6,130,736 was collateralized with securities held by the Nevada Pooled Collateral Program.

Concentrations of Credit Risk: Concentration of credit risk is defined as the risk of loss attributed to the magnitude of a government's investment in a single issuer. Investments with a single issuer within the Lincoln County Treasurer Cash and investment pool that represent five percent or more of total investments as of June 30, 2021, are as follows:

U.S. Treasury Notes	12.43%

Fair Value: The County categorize its investments using fair value measurements within the fair value hierarchy established by generally accepted accounting principles. The hierarchy is based on the valuation inputs used to measure the fair value of the asset. Level 1 inputs are quoted prices in active markets for identical assets; Level 2 inputs are significant other observable inputs; Level 3 inputs are significant unobservable inputs.

The County has the following recurring fair value measurements as of June 30, 2021:

Investment Type	Fair Value	Level 1	Level 2	Level3
U.S. Treasury notes	$ 2,530,141	$ 2,530,141	$ 0	$ 0
U.S. Agency backed mortgages	1,932,623	0	1,932,623	0
Corporate notes	3,346,677	0	3,346,677	0
Money market mutual funds	440,216	440,216	0	0
Negotiable certificates of deposit	12,547,527	0	12,547,527	0
Total Investments	$20,797,184	$ 2,970,357	$17,826,827	$ 0

NOTE D. DETAILED NOTES ON ALL FUNDS (Continued)

1. Pooled Cash and Investments (Continued)

External Investment Pool: The County Treasurer administers an investment pool in accordance with NRS 355.168 combining the County funds with investments from Caliente City, Lincoln County School District, Range, Panaca Fire Protection District, Pahranagat Fire District, Pioche Fire District, Southeastern Lincoln County Habitat Conservation Plan GID, and the Lincoln County Fire District. The Board of County Commissioners has the overall responsibility of investment of funds including the external investment pool in accordance with NRS 355.175. The Lincoln County Treasurer is delegated investment responsibilities. The fair value of investments is determined monthly as statements from the various investment companies are received. Each participant's share is equal to their original investment plus or minus monthly allocations of interest income and realized and unrealized gains and losses. The County has not provided nor obtained any legally binding guarantees to support the value of the shares.

A summary of investments held in external investment pools at June 30, 2021, is as follows:

Investment Type	Fair Value	Principal Amount	Interest Rate
U.S. Treasury notes	$ 1,532,944	$ 1,510,000	Variable
U.S. Agency backed mortgages	744,265	716,290	Variable
Corporate notes	2,816,561	2,800,000	Variable
Money market funds	371,630	371,630	Variable
Negotiable certificates of deposit	9,656,111	9,409,000	Variable
Total Investments	$15,121,511	$ 14,806,920	

External Investment Pool Condensed Financial Statement
Statement of Net Position
June 30, 2021

Assets:	
Investments in securities:	
U.S. Treasury notes	$ 1,532,944
U.S. Agency backed mortgages	744,265
Corporate notes	2,816,561
Money market funds	371,630
Negotiable certificates of deposit	9,656,111
Total investments held in external investment pools	$ 15,121,511
Net position held in trust for pool participants	
Net position consists of	
Internal participants	$ 11,911,551
External participants	3,209,960
Total net position held in trust for pool participants (Participant's units' outstanding, $1.00/par)	$ 15,121,511

Statement of Changes in Net Position
For the Year Ended June 30, 2021

Additions:	
Investment earnings	$ 208,711
Net change in fair value of investments	(159,639)
Change in net position resulting from operations	49,072
Net capital share transactions	(775,856)
Change in net position	(726,784)
Net position, beginning of year	15,848,295
Net position, end of year	$ 15,121,511

NOTE D. DETAILED NOTES ON ALL FUNDS (Continued)

2. Receivables

Below is the detail of receivables for each major fund and the nonmajor funds, in the aggregate, including the applicable allowances for uncollectible accounts:

Receivables:	Interest	Taxes	Due from Other Governments	Due from Others	Accounts Receivable	Total
General	$ 5,768	$16,763	$ 323,513	$ -	$ -	$ 346,044
Road	701	-	296,039	-	-	296,740
Lincoln County Water District Water Resources	10,000	-	-	-	-	10,000
Lincoln County Land Act Special Use	10,872	-	-	-	-	10,872
County Grant	1,075	-	369,708	-	-	370,783
Other Governmental Funds	22,656	15,593	118,087	240,625	-	396,961
Detention Center	-	-	-	-	4,575	4,575
Solid Waste	100	-	-	-	122,317	122,417
Nonmajor Enterprise Funds	333	-	-	-	33,345	33,678
Total receivables	$51,505	$32,356	$ 1,107,347	$ 240,625	$ 160,237	$1,592,070

3. Capital Assets

Capital assets activity for the year ended June 30, 2021, was as follows:

Governmental Activities:

	Balance June 30, 2020	Additions	Transfers	Dispositions	Balance June 30, 2021
Capital assets not being depreciated:					
Land	$ 1,809,860	$ -	$ -	$ -	$ 1,809,860
Construction in progress	-	87,963	-	-	87,963
Total capital assets not being depreciated	1,809,860	87,963	-	-	1,897,823
Capital assets being depreciated:					
Building and improvements	24,007,629	413,458	-	-	24,421,087
Infrastructure	2,150,970	-	-	-	2,150,970
Equipment	8,932,904	634,722	(696,639)	(84,379)	8,786,608
Total capital assets being depreciated	35,091,503	1,048,180	(696,639)	(84,379)	35,358,665
Less accumulated depreciation for:					
Building and improvements	8,758,484	867,426	-	-	9,625,910
Infrastructure	416,839	43,020	-	-	459,859
Equipment	4,882,945	376,242	(465,182)	(48,216)	4,745,789
Total accumulated depreciation	14,058,268	1,286,688	(465,182)	(48,216)	14,831,558
Total capital assets being depreciated, net	21,033,235	(238,508)	(231,457)	(36,163)	20,527,107
Governmental activities assets, net	$ 22,843,095	$ (150,545)	$ (231,457)	$ (36,163)	$ 22,424,930

NOTE D. DETAILED NOTES ON ALL FUNDS (Continued)

3. Capital Assets (Continued)

Business-type Activities:

	Balance June 30, 2020	Additions	Dispositions	Balance June 30, 2021
Capital assets not being depreciated:				
Land	$ 214,000	$ -	$ -	$ 214,000
Construction in progress	-	23,500	-	23,500
Total capital assets not being depreciated	214,000	23,500	-	237,500
Capital assets being depreciated:				
Building and improvements	1,374,844	-	-	1,374,844
Utility system	1,383,402	23,635	-	1,407,037
Equipment	1,898,420	125,096	-	2,023,516
Total capital assets being depreciated	4,656,666	148,731	-	4,805,397
Less accumulated depreciation for:				
Building and improvements	471,761	43,998	-	515,759
Utility system	720,425	33,414	-	753,839
Equipment	915,134	110,715	-	1,025,849
Total accumulated depreciation	2,107,320	188,127	-	2,295,447
Total capital assets being depreciated, net	2,549,346	(39,396)	-	2,509,950
Business-type activities assets, net	$ 2,763,346	$ (15,896)	$ -	$ 2,747,450

Depreciation expense was charged to functions/programs of the primary government as follows:

Governmental activities:	
General government	$ 128,391
Public safety	98,441
Judicial	30,572
Public works	496,425
Health and sanitation	35,629
Welfare	17,823
Community support	18,104
Culture and recreation	461,303
	$ 1,286,688
Business activities:	
Water	$ 25,690
Sewer	19,749
Electric	0
Solid waste	98,677
Detention center	44,011
	$ 188,127

NOTE D. DETAILED NOTES ON ALL FUNDS (Continued)

4. Accrued Liabilities

Accrued liabilities reported by governmental funds at June 30, 2021, were as follows:

Fund	Accrued Payroll and Benefits	Customer Deposits	Interest Payable
General	$ 233,463	$ -	$ -
Road	58,658	-	-
Lincoln County Land Act Special Use	-	-	-
County Grants	21,669	-	-
Other Governmental Funds	32,315	-	-
Detention Center	94,772	-	-
Solid Waste	20,437	-	11,730
Nonmajor Enterprise Funds	18,804	60	1,263
Total	$ 480,118	$ 60	$ 12,993

5. Restricted Assets

The balances of the County's restricted asset accounts are as follows

Cash – Pioche Public Utility –	USDA debt and replacement reserve	$ 11,490
Cash – Solid Waste	Landfill closure, and post-closure	93,446
Total restricted cash		$ 104,936

NOTE D. DETAILED NOTES ON ALL FUNDS (Continued)

6. Long-term Debt

Governmental Type Activities:

Capital Leases

a. The County entered into a lease agreement for 4 public safety vehicles totaling $133,245. The leases have been classified as capital leases according to generally accepted accounting principles. The leases contain non-funding clauses whereby the leases are terminated without penalty should the County fail in a budget year to appropriate money for the payment. The vehicles have a ten-year estimated useful life. This year, $26,649 was included in depreciation expense. This lease agreement qualifies as a capital lease for accounting purposes and, therefore, has been recorded at the present value of future minimum lease payments as of the inception date. The lease was paid in full as of June 30, 2021.

b. During the year ending June 30, 2020, the County entered into a lease agreement for 3 public safety vehicles totaling $100,300. The leases have been classified as capital leases according to generally accepted accounting principles. The leases contain non-funding clauses whereby the leases are terminated without penalty should the County fail in a budget year to appropriate money for the payment. The vehicles have a ten-year estimated useful life. This year, $27,023 was included in depreciation expense. This lease agreement qualifies as a capital lease for accounting purposes and, therefore, has been recorded at the present value of future minimum lease payments as of the inception date. The future minimum lease obligations and the net present value of these minimum lease payments as of June 30, 2021, were as follows:

Year Ending June 30,	Remaining Payments	Amount Representing Principal	Amount Representing Interest
2022	$ 35,792	$ 33,440	$ 2,352

NOTE D. DETAILED NOTES ON ALL FUNDS (Continued)

6. Long-term Debt (Continued)

Business-Type Activities:

Revenue Bonds The County issues revenue bonds to provide funds for the acquisition and construction of utility capital assets. Revenue bonds have been issued for the business-type activities. Revenue bonds are an obligation of the enterprise utility funds for which the capital assets were acquired or constructed. Revenue bonds outstanding at June 30, 2021, are as follows:

a. **$210,000, 2007 Pioche Town Sewer bond** is payable to the U.S. Department of Agriculture-Rural Development. The bond is payable in semi-annual payments of $5,584 including interest. The interest rate is 4.375%. The bond agreement requires the County to establish and fund monthly a debt service reserve fund equal to 10% of the semi-annual payment each month over the life of the loan until they accumulate one annual installment. This reserve fund can be used for emergency maintenance and repairs, and debt repayment should the need arise. The required reserve as of June 30, 2021, is $11,490. The balance in the reserve account was $11,490 as of June 30, 2021 **(See Note D-5)**. The outstanding balance of bonds payable at June 30, 2021, was $174,049.

Annual debt service requirements to maturity for the revenue bond are as follows:

Year Ending June 30,	Principal	Interest
2022	$ 3,592	$ 7,576
2023	3,751	7,417
2024	3,915	7,253
2025	4,090	7,078
2026	4,281	6,887
2027-2031	24,358	31,482
2032-2036	30,246	25,594
2037-2041	37,551	18,289
2042-2046	46,623	9,217
2047-2048	15,642	650
	$ 174,049	$ 121,443

NOTE D. DETAILED NOTES ON ALL FUNDS (Continued)

6. Long-term Debt (Continued)

Changes in Long-term Debt: During the year ended June 30, 2021, the following changes occurred in long-term debt:

Governmental activities:

	Balance June 30, 2020	Net Additions	Net Deletions	Balance June 30, 2021	Due within One Year
Compensated absences	$ 420,161	$ -	$ 30,842	$ 389,319	$ 214,125
Net pension liability	7,364,827	-	87,867	7,276,960	-
Total OPEB obligation payable	406,098	-	6,366	399,732	-
Capital lease payable	108,723	-	75,283	33,440	33,440
Total	$ 8,299,809	$ -	$ 200,358	$ 8,099,451	$ 247,565

Business-type activities:

	Balance June 30, 2020	Net Additions	Net Deletions	Balance June 30, 2021	Due within One Year
Compensated absences	$ 178,758	$ -	$ 15,277	$ 163,481	$ 89,913
Net pension liability	3,351,954	-	62,684	3,289,270	-
Total OPEB obligation payable	114,906	-	775	114,131	-
Landfill closure and postclosure costs	80,000	10,000	-	90,000	-
Bond payable	177,489	-	3,440	174,049	3,592
Total	$ 3,903,107	$ 10,000	$ 82,176	$ 3,830,931	$ 93,505

The compensated absence liability will be liquidated primarily by the General Fund for governmental activities, and by the Enterprise Funds for business activities. The capital leases will be paid by the Vehicle Capital Projects Fund.

Per Nevada Revised Statute Chapter 244A.059, the debt limitation for the County is equal to 10 percent of the assessed valuation of property, excluding motor vehicles for the current year. The debt limitation currently applicable at June 30, 2021, was $29,007,539. Per Nevada Revised Statutes Chapter 269.425, the debt limitations for the unincorporated towns, which cannot exceed 25% of assessed valuation of property within the town are as follows: Alamo Town $2,581,311, Panaca Town $3,434,026, and Pioche Town $4,518,786.

NOTE D. DETAILED NOTES ON ALL FUNDS (Continued)

7. Interfund Transfers

Interfund operating transfers are made from one fund to another fund to support expenditures in accordance with the authority established for the individual funds. Transfers between fund types during the year ended June 30, 2021, were:

		Transfer Out					
	Total Transfers In	General	Road	LC Water District Water Resources	Nonmajor Special Revenue	Nonmajor Capital Projects	Nonmajor Enterprise Fund
General Fund	$ 75,000	$ -	$ -	$ -	$ 75,000	$ -	$ -
Major County Grant Fund	4,847	-	-	-	4,847	-	-
Nonmajor Special Revenue Funds	319,339	50,000	-	200,000	69,339	-	-
Nonmajor Capital Projects Funds	203,997	-	100,000	-	5,000	98,997	-
Major Enterprise - Detention Center	1,006,000	600,000	-	-	406,000	-	-
Nonmajor Enterprise Funds	255,710	-	-	-	50,000	-	205,710
Total	$1,864,893	$ 650,000	$ 100,000	$ 200,000	$ 610,186	$ 98,997	$ 205,710

Following are explanations of certain interfund transfers of significance to the County:

The General Fund transferred money to the following funds: Detention Center $600,000 and China Springs $10,000 to help cover costs.

The internally reported Special Projects Fund transferred $40,000 to the Property Management Fund to help cover costs.

The Road Fund transferred $100,000 to the Road Capital Projects Fund to help cover the costs of a new equipment.

The Federal in Lieu Fund transferred money to the following funds: Building Enterprise Fund $50,000, Detention Center Fund $406,000, and the Planning Fund $75,000 which is internally reported fund in the General Fund. These budgeted transfers were made to help cover operating costs. Transfers were also made for $4,847 to the County Grant Fund, $6,433 to the Transportation Fund, and $32,339 to the Senior Nutrition Fund for grant match.

The Lincoln County Water District Water Resources Fund transferred $200,000 to the Lincoln County Water District General Fund to help cover operating costs.

The Regional Transportation Commission transferred $28,567 to the Transportation Fund for a grant match and to help cover costs.

The Capital Projects Fund transferred money to the following capital projects funds: $88,016 to the Vehicle Capital Projects for assistance with capital asset purchases and debt payments; $10,981 to the Alamo, Panaca, and Pioche Town Capital Projects Funds for distribution of property taxes collected pursuant to Nevada Revised Statutes 354.59815.

The Ambulance Fund transferred $5,000 to the Ambulance Capital Projects Fund to help cover the costs of a new equipment.

The Indigent Fund transferred $2,000 to the District Court Specialty Court Fund to help cover the indigent court costs.

The Pioche Public Utility Electric Fund closed operations and transferred remaining funds to Pioche Public Utility Water of $102,855 and Pioche Public Utility Sewer of $102,855.

NOTE D. DETAILED NOTES ON ALL FUNDS (Continued)

8. Interfund Receivable / Payable

The composition of interfund balances as of June 30, 2021, is as follows:

Due to	Due from	Amount
General Fund	Lincoln County Water District Water Resources	$ 20,895
	Legal Aid Fund	1,739
		$ 22,634

The payable to the General Fund was made to cover negative cash balances in the Legal Aid Fund at year-end. The amount is expected to be paid with current resources. The payable from the Lincoln County Water District Water Resources Fund relates to investment account balances that need to be transferred to the operating cash account.

The Solid Waste Enterprise Fund borrowed monies from two special revenue funds which is being repaid over 10 years. The funds which will receive those payments are as follows:

	Due to		Due from
Lincoln County Land Act Special Use	$ 537,338	Solid Waste Enterprise	$ 687,338
Lincoln County Water Special Use	150,000		
	$ 687,338		

The County purchased the local landfill and created the Solid Waste Enterprise Fund in 2017. To help cover initial costs and have cash available, the Solid Waste Enterprise Fund borrowed monies from two special revenue funds which is being repaid over 10 years at 0% interest. Annual debt service requirements to maturity for the payable are as follows:

Year Ending June 30,	Principal
2022	$ 40,000
2023	40,000
2024	40,000
2025	60,000
2026	60,000
2027	60,000
	$ 300,000

The County purchased a roll off truck in 2020 for $179,738. To help cover costs and have cash available, the Solid Waste Enterprise Fund borrowed monies from the Lincoln County Land Act Special Use special revenue fund which is being repaid over 10 years at 4% interest. Annual debt service requirements to maturity for the payable are as follows:

Year Ending June 30,	Remaining Payments	Amount Representing Principal	Amount Representing Interest
2022	$ 22,809	$ 16,894	$ 5,915
2023	22,809	17,570	5,239
2024	22,809	18,272	4,537
2025	22,809	19,003	3,806
2026	22,809	19,763	3,046
2027-2029	60,857	56,592	4,265
	$ 174,902	$ 148,094	$ 26,808

NOTE D. DETAILED NOTES ON ALL FUNDS (Continued)

8. Interfund Receivable / Payable (Continued)

The County purchased a front load truck in 2020 for $266,802. To help cover costs and have cash available, the Solid Waste Enterprise Fund borrowed monies from the Lincoln County Land Act Special Use special revenue fund which is being repaid over 10 years at 2% interest. Annual debt service requirements to maturity for the payable are as follows:

Year Ending June 30,	Remaining Payments	Amount Representing Principal	Amount Representing Interest
2022	$ 32,894	$ 23,324	$ 9,570
2023	32,894	24,257	8,637
2024	32,894	25,228	7,666
2025	32,894	26,237	6,657
2026	32,894	27,286	5,608
2027-2030	123,984	112,912	11,072
	$ 288,454	$ 239,244	$ 49,210

9. Unearned Revenue

Governmental funds report unearned revenue in connection with the resources that have been received but not yet earned. At June 30, 2021, the County had the following unearned revenues:

Qualifying expenditures for expenditure-driven grants have not occurred before June 30, 2021.

County Grant	Other Governmental	Total
$ 681,127	$ 131,260	$ 812,387

10. Unavailable Revenue

Delinquent taxes receivable not collected within sixty days after year-end are recorded as deferred inflows of resources as they are not available to pay liabilities of the current period. At June 30, 2021, the County had the following unavailable revenues:

General	Other Governmental	Total
$ 14,047	$ 6,511	$ 20,558

Grants receivable not collected within sixty days after year-end are recorded as deferred inflows of resources as they are not available to pay liabilities of the current period. The following grants receivable have been deferred:

County Grants
$ 111,601

NOTE D. DETAILED NOTES ON ALL FUNDS (Continued)

11. Risk Management

Property, Casualty, Crime, and Machinery Insurance

The County is exposed to various risks of loss related to torts; theft of, damage to, and destruction of assets; errors and omissions; injuries to employees; and natural disasters. The County joined together with other local governments throughout the State of Nevada to create a pool under the Nevada Interlocal Cooperation Act. The Nevada Public Agency Insurance Pool (NPAIP) is a public entity risk pool currently operating as a common risk management and insurance program for members. The County pays an annual premium and specific deductibles, as necessary, to NPAIP for its general insurance coverage. NPAIP is considered a self-sustaining risk pool that will provide liability coverage for its members up to $10,000,000 per event and a $10,000,000 annual aggregate per member. Property, crime, and equipment breakdown coverage is provided to its members up to $300,000,000 per loss with various sub-limits established for earthquake, flood, equipment breakdown, and money and securities. As a participatory member, the maintenance deductible is $2,000 for each insured event. Cyber security events including privacy response expense are covered at $3,000,000 per event with an annual aggregate of $3,000,000 and do not have a maintenance deductible.

The County is self-insured for unemployment claims. Payments are made from the general fund to cover claims.

The County participates in the Public Agency Compensation Trust (PACT). Premiums paid to PACT cover workers' compensation claims against the County. Premiums are based on a percentage of wages paid. PACT is considered a self-sustaining risk pool that will provide coverage based upon the statutory limit of $2,000,000.

The County carries commercial insurance for all other risks of loss including employee health and accident insurance. Settled claims resulting from these risks have not exceeded commercial insurance coverage in any of the past three fiscal years.

12. Contingent Liabilities

Grants
Amounts received or receivable from grantor agencies are subject to audit and adjustment by those agencies, principally the Federal Government. Any disallowed claims, including amounts already collected, may constitute a liability of the applicable funds. The amount, if any, of expenditures which may be disallowed by the grantor cannot be determined at this time although the County expects such amounts, if any, to be immaterial.

Litigation
The County is a defendant in various lawsuits. Although the outcome of these lawsuits is not presently determinable, it is the opinion of the County's counsel that resolution of these matters will not have a material adverse effect on the financial condition of the County.

Landfill Closure and Post-Closure Costs
State and federal laws and regulations require the County to place a final cover on its landfill sites when it stops accepting waste and to perform certain maintenance and monitoring functions at the sites for thirty years after closure. The closure and post-closure care costs will be paid only near or after the date that the landfills stop accepting waste.

As of June 30, 2021, the estimated liability to date for closure and post-closure costs is $90,000. This represents the cumulative amount reported to date based on percent capacity use of the estimated liability of $2,067,000 as the remaining capacity is used. Actual costs may be higher due to inflation, changes in technology, or changes in regulations. The County operates one landfill with an estimated remaining life of 38 years. As of June 30, 2021, cash in the amount of $93,446, has been restricted for future closure, post-closure, and opening landfill costs in the Solid Waste Fund. The County is presently using the "Local Government Test" as financial assurance mechanism for its closure and post-closure costs.

NOTE D. DETAILED NOTES ON ALL FUNDS (Continued)

13. Defined Benefit Pension Plan

Plan Description. All half time and greater County employees are provided pension benefits through the Public Employees' Retirement System of the State of Nevada (PERS), a cost sharing multiple-employer, defined benefit plan administered by the Public Employees' Retirement System of the State of Nevada. PERS provides retirement benefits, disability benefits, and death benefits, including annual cost of living adjustments, to plan members and their beneficiaries. NRS Chapter 286 establishes the benefit provisions provided to the participants of PERS. These benefit provisions may only be amended through legislation. The Public Employees' Retirement System of the State of Nevada issues a publicly available financial report that includes financial statements and required supplementary information for PERS that can be obtained at www.nvpers.org under Quick Links — Publications.

Benefits Provided. Benefits, as required by the Nevada Revised Statutes (NRS or statute), are determined by the number of years of accredited service at time of retirement and the member's highest average compensation in any 36 consecutive months. Vested members are entitled to a life-time monthly retirement benefit equal to the service time multiplier (STM) percentages listed below times the member's years of service to a maximum of 30 years. The schedule of Eligibility for Monthly Unreduced Retirement Benefits for regular members and police/fire members are as follows:

Eligibility for Regular Members:

Years of Service	Hired prior to 07/01/01		Hired between 07/01/01-12/31/09		Hired Between 01/01/10-07/01/15		Hired After 7/1/15	
	Age	STM%	Age	STM%	Age	STM%	Age	STM%
5 years	65	2.50%	65	2.67%	65	2.50%	65	2.25%
10 years	60	2.50%	60	2.67%	62	2.50%	62	2.25%
30 years	Any	2.50%	Any	2.67%	Any	2.50%	55	2.25%
33 1/3 years							Any	2.25%

Eligibility for Police and Fire Members:

Years of Service	Hired prior to 07/01/01		Hired between 07/01/01-12/31/09		Hired Between 01/01/10-07/01/15		Hired After 7/1/15	
	Age	STM%	Age	STM%	Age	STM%	Age	STM%
5 years	65	2.50%	65	2.67%	65	2.50%	65	2.25%
10 years	55	2.50%	55	2.67%	60	2.50%	60	2.25%
20 years	50	2.50%	50	2.67%	50	2.50%	50	2.25%
25 years	Any	2.50%	Any	2.67%				
30 years					Any	2.50%	Any	2.25%

* Only service performed in a position as a police officer or firefighter may be counted towards eligibility for retirement as Police/Fire accredited service.

Benefit payments to which participants or their beneficiaries may be entitled under the plan include pension benefits, disability benefits, and survivor benefits. The System offers several alternatives to the unmodified service retirement allowance which, in general, allow the retired employee to accept a reduced service retirement allowance payable monthly during his or her lifetime and various optional monthly payments to a named beneficiary after his or her death. Post-retirement increases are provided by authority of NRS 286.575 - .579.

The normal ceiling limitation on monthly benefits allowances is 75% of average compensation. However, a member who has an effective date of membership before July 1, 1985, is entitled to a benefit of up to 90% of average compensation. Both Regular and Police/Fire members become fully vested as to benefits upon completion of five years of service.

NOTE D. DETAILED NOTES ON ALL FUNDS (Continued)

13. Defined Benefit Pension Plan (Continued)

Contributions: Benefits for plan members are funded under the employer pay contribution plan. The County is required to contribute all amounts due under the plan. PERS receives an actuarial valuation on an annual basis indicating the contribution rates required to fund the System on an actuarial reserve basis. Contributions actually made are in accordance with the required rates established by the Nevada Legislature. These statutory rates are increased/decreased pursuant to NRS 286.421 and 286.450. The County's required contribution rates for the year ending June 30, 2021, were 42.50% for police and fire; 29.25% for regular employees; 45.50% for Justice of the Peace; and 15.25% employee/employer match. The County has fully funded the amounts due for the year ending June 30, 2021. For purposes of GASB No. 82, the County recognized only the employer portion as a deferred outflow.

The actuary funding method used is the Entry Age Normal Cost Method. It is intended to meet the funding objective and result in a relatively level long-term contribution requirement as a percentage of salary.

Pension Liabilities, Pension Expense, and Deferred Outflows of Resources and Deferred Inflows of Resources Related to Pensions

At June 30, 2021, the County reported a liability of $10,566,230 for its proportionate share of the net pension liability. The net pension liability was measured as of June 30, 2020, and the total pension liability used to calculate the net pension liability was determined by an actuarial valuation as of that date. The County's allocation percentage of the net pension liability was based on the total contributions due on wages paid during the measurement period. Each employer's proportion of the net pension liability is based on their combined employer and member contributions relative to the total combined employer and member contributions for all employers for the period ended June 30, 2020. The County's proportionate share of the net pension liability decreased from 0.07859 percent at June 30, 2019 to 0.07586 at June 30, 2020.

For the year ended June 30, 2021, the County recognized pension expense of $571,217. At June 30, 2021, the County reported deferred outflows of resources and deferred inflows of resources related to pensions from the following sources:

	Deferred Outflows of Resources	Deferred Inflows of Resources
Differences between expected and actual results	$ 328,285	$ 136,436
Net difference between projected and actual earnings on pension plan investments	0	399,148
Changes in assumption	296,794	0
Changes in proportion	39,171	973,649
County Contributions subsequent to measurement date	567,267	0
Total	$ 1,231,517	$ 1,509,233

NOTE D. DETAILED NOTES ON ALL FUNDS (Continued)

13. Defined Benefit Pension Plan (Continued)

Pension Liabilities, Pension Expense, and Deferred Outflows of Resources and Deferred Inflows of Resources Related to Pensions (Continued)

$567,267 was reported as deferred outflows of resources related to pensions resulting from County contributions subsequent to the measurement date will be recognized as a reduction of the net pension liability in the year ended June 30, 2022. Other amounts reported as deferred outflows of resources and deferred inflows of resources related to pensions will be recognized in pension expense as follows:

Year ended June 30:	
2022	$(429,972)
2023	(154,509)
2024	(97,330)
2025	(82,696)
2026	(72,431)
2027	(8,045)
	$(844,983)

Actuarial Assumptions: The System's net pension liability was measured as of June 30, 2020, and the total pension liability used to calculate the net pension liability was determined by an actuarial valuation as of that date. The total pension liability was determined using the following actuarial assumptions, applied to all periods included in the measurement:

Inflation rate	2.75%
Payroll Growth	Regular: 5.50%
	Police/Fire: 6.50%
Investment Rate of Return	7.50%, including inflation
Productivity pay increase	0.50%
Projected Salary increases	Regular: 4.25% to 9.15%, depending on service
	Police/Fire: 4.55% to 13.90%, depending on service
	Rates include inflation and productivity increases
Other assumptions	Same as those used in the June 30, 2020 funding actuarial valuation

Mortality rates were based on the following:

Healthy:	Headcount-Weighted RP-2014 Annuitant Table projected to 2020 with Scale MP-2016, set forward one year for spouses and beneficiaries. For ages less than 50, mortality rates are based on the headcount–Weighted RP-2014 Employee Mortality Tables. Those mortality rates are adjusted by the ratio of the mortality rate for members at age 50 to the mortality rate at age 50 from the Employee mortality tables listed above. The mortality rates are then projected to 2020 with Scale MP-2016.

NOTE D. DETAILED NOTES ON ALL FUNDS (Continued)

13. Defined Benefit Pension Plan (Continued)

Pension Liabilities, Pension Expense, and Deferred Outflows of Resources and Deferred Inflows of Resources Related to Pensions (Continued)

Mortality rates were based on the following: (Continued)

Disabled:	Headcount-Weighted RP-2014 Disabled Retiree Table, set forward four years. The RP-2014 Healthy Annuitant Mortality Tables have rates only for ages 50 and later.
Pre-Retirement	Headcount-Weighted RP-2014 Employee Table, projected to 2020 with Scale MP-2016

The RP-2014 Headcount–Weighted Mortality Tables, set forward one year for spouses and beneficiaries, reasonably reflect the projected mortality experience of the Plan as of the measurement date. The additional projection of 6 years is a provision made for future mortality improvement.

Actuarial assumptions used in the June 30, 2020 valuation were based on the results of the experience study for the period of July 1, 2012 through June 30, 2016. The System's policies which determine the investment portfolio target asset allocation are established by the Public Employees' Retirement Board. The asset allocation is reviewed annually and is designed to meet the future risk and return needs of the System.

The following was the Board adopted policy target asset allocation as of June 30, 2020:

Asset Class	Target Allocation	Long-Term Geometric Expected Real Rate of Return*
U.S. Stock	42%	5.50%
International Stock	18%	5.50%
U.S. Bonds	28%	0.75%
Private Markets	12%	6.65%

*As of June 30, 2020, PERS' long-term inflation assumption was 2.75%

Discount Rate: The discount rate used to measure the total pension liability was 7.50% as of June 30, 2020. The projection of cash flows used to determine the discount rate assumed that employee and employer contributions will be made in amounts consistent with statutory provisions and recognizing the plan's current funding policy and cost-sharing mechanism between employer and members. For this purpose, all contributions that are intended to fund benefits for all plan members and their beneficiaries are included, except that projected contributions that are intended to fun the service costs for future plan members and their beneficiaries are not included.

Based on that assumption, the pension plan's fiduciary net position was projected to be available to make all projected future benefit payments of current active and inactive employees. Therefore, the long-term expected rate of return on pension plan investments was applied to all periods of projected benefit payments to determine the total pension liability as of June 30, 2020.

NOTE D. DETAILED NOTES ON ALL FUNDS (Continued)

13. Defined Benefit Pension Plan (Continued)

Pension Liabilities, Pension Expense, and Deferred Outflows of Resources and Deferred Inflows of Resources Related to Pensions (Continued)

Sensitivity of the County's proportionate share of the net pension liability to change in the discount rate: The following presents the County's proportionate share of the net pension liability calculated using the discount rate of 7.50 percent, as well as what the County's proportionate share of the net pension liability would be if it were calculated using a discount rate that is 1 percent higher or lower than the current rate.

	1.0% Decrease (6.5%)	Discount Rate (7.5%)	1.0% Increase (8.5%)
County's proportionate share of the net pension liability	$ 16,478,934	$ 10,566,230	$ 5,649,901

Pension Plan Fiduciary Net Position: Detailed information about the pension plan's fiduciary net position is available in the PERS Comprehensive Annual Financial Report, available on the PERS website.

Pension contributions payable: At June 30, 2021, the County reported payables to the defined benefit pension plan of $58,649 for legally required employer contributions which had not yet been remitted to PERS.

14. Post-Employment Healthcare Plan

Plan Description: The County subsidizes eligible retirees' contributions to the Public Employees' Benefits Plan (PEBP), an agent multiple-employer defined benefit postemployment health care plan administered by the State of Nevada. The plan provides medical, vision, dental and life insurance benefits to eligible retired County employees and beneficiaries. NRS 287.041 assigns the authority to establish and amend benefit provisions to the PEBP nine-member board of trustees. The plan is now closed to current County retirees. However, County employees who previously met the eligibility requirement for retirement within the Nevada Public Employees' Retirement System had the option upon retirement to enroll in coverage under the PEBP and the subsidy provided by the County was determined by their number of years of service. The PEBP issues a publicly available financial report that includes financial statements and required supplementary information. That report may be obtained by writing to Public Employee's Benefits Program, 901 S. Stewart Street, Suite 1001, Carson City, NV 89701, by calling (775) 684-7000, or by accessing the website at https://pebp.state.nv.us under Resources – Fiscal & Utilization Reports.

Employees covered by benefit terms. As of the June 2019 valuation, the following employees were covered by the benefit terms:

Inactive employees or beneficiaries currently receiving benefit payments	22
Inactive employees entitled to but not yet receiving benefit payments	0
Active employees	0
	22

NOTE D. DETAILED NOTES ON ALL FUNDS (Continued)

14. Post-Employment Healthcare Plan (Continued)

Funding Policy NRS 287.046 establishes the subsidies to be contributed toward the premium costs of the eligible retired County employees. As noted above, the County policy is to only fund retirees who retired prior to July 1, 2009. Plan members receiving benefits have their monthly contributions deducted from their pension checks based on the health plan chosen by the retiree as reduced by the amount of the subsidy. Effective July 2015, the subsidy provided to pre-Medicare retirees varies based on the type of plan selected (PPO or HMO) and by the level of coverage taken (e.g., single, two party, family, etc.). The chart below shows our understanding of monthly amounts currently payable for those with 15 years of PERS service. Actual pre-Medicare subsidies for July 2019, as invoiced to the County by individual, were used for the valuation. Some subsidy increases are expected pursuant to SB663, to be phased in through 2022.

Coverage Level	PPO CDHP		Statewide EPO/HMO	
	Base Subsidy	SB 552 Subsidy	Base Subsidy	SB 552 Subsidy
	15 Years of Service			
Retiree Only	$ 813.80	$163.65	$ 398.00	$ (11.66)
Retiree + Spouse	1,389.86	419.51	630.93	(28.22)
Retiree + Child(ren)	1,212.52	384.79	527.69	(5.39)
Retiree + Family	1,788.58	640.65	760.62	(21.95)

All Medicare eligible retirees participate in a Medicare Exchange with PEBP providing a service related contribution to a Health Reimbursement Arrangement (HRA) equal to $13 per month per year of service (maximum $260 per month). The contribution requirements of plan members and the County are established and amended by the PEBP board of trustees.

As a participating employer, the County is billed for the subsidy on a monthly basis and is legally required under NRS 287.023 to provide for it.

For fiscal year 2021, the County contributed $25,129 to the plan for current premiums. The County did not prefund any future benefits.

Important Dates used in the Valuation:

Valuation Date:	June 30, 2019
Measurement Date:	June 30, 2020
Measurement Period:	June 30, 2019 to June 30, 2020
Fiscal Year End:	June 30, 2021

Significant Results and Differences from the Prior Valuation:

There were no changes in benefit terms from the prior valuation. No assumption changes were made other than to update the discount rate.

Total Other Post-Employment Benefits (OPEB) Liability

The County's OPEB liability of $513,863 was measured as of June 30, 2020 and determined by actuarial valuation as of that date.

NOTE D. DETAILED NOTES ON ALL FUNDS (Continued)

14. Post-Employment Healthcare Plan (Continued)

Actuarial Assumptions and Other Inputs: The total OPEB liability in the June 30, 2019, actuarial valuation was determined using the following actuarial assumptions and other inputs, applied to all periods included in the measurement:

	PEBP
Inflation rate	2.50%
Salary Increase	Not applicable; there are no active employees in this plan.
Discount Rate	2.66%
Healthcare Cost Trend Rates	Pre-Medicare: 5.40% fluctuating down to 4.50% by 2076. Post-Medicare: 4.50% for all years.
Retirees' share of benefit-related costs	0%

The discount rate was based on the S & P General Obligation Municipal Bond 20 year High Grade Index.

Mortality rates were based on the NVPERS 2019 experience study with improvements using the Macleod Watts Scale for 2020.

Actuarial assumptions used in the June 30, 2019, valuation were based on the results of an actuarial experience study for the period of July 1, 2018 to June 30, 2019.

Changes in the Total OPEB Liability

	PEBP
Service cost	$ 0
Interest	14,133
Changes of benefit terms	0
Differences between expected and actual experience	0
Changes in assumptions or other inputs	7,595
Benefit payments	(28,869)
Net changes	(7,141)
Net OPEB obligation - beginning of the year	521,004
Net OPEB obligation - end of year	$ 513,863

Changes of assumptions and other inputs reflect a change in the discount rate from 2.79% as of June 30, 2019, to 2.66% as of June 30, 2020.

Sensitivity of the County's total OPEB liability to changes in the discount rate. The following presents the total OPEB liability of the County, as well as what the County's total OPEB liability would be if it were calculated using a discount rate that is 1 percent higher or lower than the current rate.

	1.0% Decrease (1.66%)	Discount Rate (2.66%)	1.0% Increase (3.66%)
PEBP	$ 578,751	$ 513,863	$ 459,796

NOTE D. DETAILED NOTES ON ALL FUNDS (Continued)

14. Post-Employment Healthcare Plan (Continued)

Sensitivity of the County's total OPEB liability to changes in the healthcare cost trend rates. The following presents the total OPEB liability of the County, as well as what the County's total OPEB liability would be if it were calculated using healthcare cost trend rates that are 1 percent higher or lower than the current healthcare cost trend rates:

	1.0% Decrease	Discount Rate	1.0% Increase
PEBP	$ 461,236	$ 513,863	$ 575,772

OPEB Expense, Deferred Outflows of Resources, and Deferred Inflows of Resources Related to OPEB

For the year ended June 30, 2021, the County recognized OPEB expense of $21,727. At June 30, 2021, the County reported deferred inflows and outflows of resources related to pensions from the following sources:

	Deferred Outflows of Resources	Deferred Inflows of Resources
Differences between expected and actual results	$ 0	$ 0
Changes of assumptions or other inputs	0	0
County Contributions subsequent to measurement date	25,129	0
Total	$ 25,129	$ 0

$25,129 reported as deferred outflows of resources related to OPEB resulting from County contributions subsequent to the measurement date will be recognized as a reduction of the total OPEB liability in the year ended June 30, 2022. There were no other amounts reported as deferred outflows of resources and deferred inflows of resources related to OPEB to be recognized as OPEB expense.

15. Water Delivery Teaming Agreement

The Water District has entered into a water teaming agreement. The purpose of the agreement is to develop a water infrastructure and provide wholesale water to adjoining water districts and/or developers who require water. Investment to develop the water sources are funded by the partner. The Water District is not required to provide funding. Should projects fail, the Water District has no liability for costs incurred by the partner. If the projects are completed and revenues are generated from the sale of water, revenues collected will be applied to the investment of the partner until paid in full for the successful projects. After payment of project expenditures, the Water District will be entitled to 50 percent of remaining monies. Should the Water District withdraw from the agreement, the Water District will be required to reimburse the partner's investment costs. Revenues, if any, from water sales are recorded in the Lincoln County Water District funds.

16. Disposal of Operations – Ambulance and Ambulance Capital Projects

On December 31, 2020, the County transferred the assets and liabilities comprising the Ambulance operations to Lincoln County Fire District. As a result of the transfer, the County recognized an intergovernmental expense of $323,617 on the disposal of its operations as a special item, which included $92,160 in cash and the carrying value of $231,457 of capital assets. This activity was recorded in the Ambulance Special Revenue Fund and Ambulance Capital Projects Fund. During the current year revenues totaled $115,528 and the health expenditures totaled $69,532.

LINCOLN COUNTY, NEVADA
REQUIRED SUPPLEMENTARY INFORMATION
MAJOR FUND - GENERAL FUND
SCHEDULE OF REVENUES, EXPENDITURES AND CHANGES IN FUND BALANCE
BUDGET (BUDGETARY BASIS) AND ACTUAL
FOR THE YEAR ENDED JUNE 30, 2021

	Original Budget	Final Budget	Actual	Variance With Final Budget Positive (Negative)
Revenues:				
Taxes:				
Property taxes	$ 2,402,004	$ 2,402,004	$ 2,423,868	$ 21,864
Licenses and permits:				
Business licenses	7,200	7,200	12,195	4,995
Liquor licenses	5,100	5,100	4,750	(350)
Gaming licenses	5,200	5,200	3,900	(1,300)
Marriage licenses	650	650	529	(121)
Total licenses and permits	18,150	18,150	21,374	3,224
Intergovernmental:				
Gaming tax	64,625	64,625	114,306	49,681
Private car line tax	4,100	4,100	-	(4,100)
Virgin Valley Water District	7,000	7,000	33,679	26,679
Southern Nevada Water District	-	-	2,426	2,426
Consolidated tax	1,419,586	1,419,586	1,479,108	59,522
Grants	56,262	56,262	76,257	19,995
Lincoln County Water District contract	36,000	36,000	36,000	-
Marijuana fees	88,235	88,235	88,235	-
Fish and wildlife	-	-	2,567	2,567
Total intergovernmental	1,675,808	1,675,808	1,832,578	156,770
Charges for services:				
Clerk fees	14,000	14,000	9,446	(4,554)
Recorder fees	50,000	50,000	59,663	9,663
Assessor commissions	65,500	65,500	35,142	(30,358)
Sheriff fees	2,500	2,500	13,475	10,975
Tax penalties and costs	45,000	45,000	65,620	20,620
District attorney fees	14,500	14,500	6,056	(8,444)
Civil fees	-	-	2,878	2,878
Security contract	122,000	122,000	183,000	61,000
Caliente police contract	75,000	75,000	64,800	(10,200)
Caliente court contract	3,850	3,850	3,500	(350)
Spay & neuter license plate fees	1,000	1,000	-	(1,000)
Total charges for services	393,350	393,350	443,580	50,230
Fines and forfeitures:				
Fines and forfeitures	176,737	176,737	254,312	77,575
Miscellaneous:				
Investment income	100,000	100,000	7,861	(92,139)
Rent, sales, refunds	40,000	40,000	51,517	11,517
Sale of county property	-	-	59,889	59,889
Other	5,000	5,000	6,632	1,632
Total miscellaneous	145,000	145,000	125,899	(19,101)
Total revenues	$ 4,811,049	$ 4,811,049	$ 5,101,611	$ 290,562

See accompanying notes to required supplementary information.

LINCOLN COUNTY, NEVADA
REQUIRED SUPPLEMENTARY INFORMATION
MAJOR FUND - GENERAL FUND
SCHEDULE OF REVENUES, EXPENDITURES AND CHANGES IN FUND BALANCE
BUDGET (BUDGETARY BASIS) AND ACTUAL (CONTINUED)
FOR THE YEAR ENDED JUNE 30, 2021

	Original Budget	Final Budget	Actual	Variance With Final Budget Positive (Negative)
General government:				
Administration:				
County commissioners:				
Salaries and wages	$ 113,413	$ 113,413	$ 102,077	$ 11,336
Employee benefits	76,705	76,705	66,557	10,148
Services and supplies	31,285	31,285	9,128	22,157
Total county commissioners	221,403	221,403	177,762	43,641
Executive officer:				
Salaries and wages	43,761	43,761	24,420	19,341
Employee benefits	23,342	23,342	24,695	(1,353)
Services and supplies	7,776	7,776	828	6,948
Total executive officer	74,879	74,879	49,943	24,936
Clerk:				
Salaries and wages	116,870	116,870	112,234	4,636
Employee benefits	53,968	53,968	51,030	2,938
Services and supplies	47,500	47,500	26,972	20,528
Total clerk	218,338	218,338	190,236	28,102
Treasurer:				
Salaries and wages	119,896	119,896	121,600	(1,704)
Employee benefits	54,913	54,913	52,051	2,862
Services and supplies	17,100	17,100	8,232	8,868
Total treasurer	191,909	191,909	181,883	10,026
Auditor and recorder:				
Salaries and wages	135,860	135,860	131,408	4,452
Employee benefits	68,028	68,028	60,295	7,733
Services and supplies	22,080	22,080	8,767	13,313
Total auditor and recorder	225,968	225,968	200,470	25,498
Assessor:				
Salaries and wages	145,503	145,503	145,223	280
Employee benefits	70,789	70,789	63,643	7,146
Services and supplies	15,624	15,624	10,022	5,602
Total assessor	231,916	231,916	218,888	13,028

See accompanying notes to required supplementary information.

LINCOLN COUNTY, NEVADA
REQUIRED SUPPLEMENTARY INFORMATION
MAJOR FUND - GENERAL FUND
SCHEDULE OF REVENUES, EXPENDITURES AND CHANGES IN FUND BALANCE
BUDGET (BUDGETARY BASIS) AND ACTUAL (CONTINUED)
FOR THE YEAR ENDED JUNE 30, 2021

	Original Budget	Final Budget	Actual	Variance With Final Budget Positive (Negative)
General government (Continued):				
Business license:				
Salaries and wages	$ 6,897	$ 6,897	$ 6,235	$ 662
Employee benefits	2,612	2,612	1,775	837
Services and supplies	1,500	1,500	912	588
Total business license	11,009	11,009	8,922	2,087
Buildings and grounds:				
Pioche:				
Salaries and wages	21,349	27,349	29,408	(2,059)
Employee benefits	5,460	5,460	1,855	3,605
Services and supplies	128,310	122,310	119,145	3,165
Total Pioche	155,119	155,119	150,408	4,711
Alamo:				
Salaries and wages	10,743	25,743	16,101	9,642
Employee benefits	7,584	7,584	13,745	(6,161)
Services and supplies	16,000	16,000	14,710	1,290
Total Alamo	34,327	49,327	44,556	4,771
Total buildings and grounds	189,446	204,446	194,964	9,482
Other general expenses:				
Employee benefits	42,000	42,000	24,448	17,552
Services and supplies	201,756	186,756	147,589	39,167
Total other general expenses	243,756	228,756	172,037	56,719
Total general government	1,608,624	1,608,624	1,395,105	213,519

See accompanying notes to required supplementary information.

LINCOLN COUNTY, NEVADA
REQUIRED SUPPLEMENTARY INFORMATION
MAJOR FUND - GENERAL FUND
SCHEDULE OF REVENUES, EXPENDITURES AND CHANGES IN FUND BALANCE
BUDGET (BUDGETARY BASIS) AND ACTUAL (CONTINUED)
FOR THE YEAR ENDED JUNE 30, 2021

	Original Budget	Final Budget	Actual	Variance With Final Budget Positive (Negative)
Public safety:				
Sheriff:				
Salaries and wages	$ 697,057	$ 697,057	$ 718,517	$ (21,460)
Employee benefits	442,078	442,078	433,747	8,331
Services and supplies	200,681	188,681	131,045	57,636
Capital outlay	-	-	23,932	(23,932)
Total sheriff	1,339,816	1,327,816	1,307,241	20,575
Emergency management:				
Salaries and wages	2,794	2,794	15,044	(12,250)
Employee benefits	14,927	6,927	5,259	1,668
Services and supplies	6,000	26,000	11,818	14,182
Total emergency management	23,721	35,721	32,121	3,600
Caliente contract:				
Salaries and wages	89,926	92,926	94,308	(1,382)
Employee benefits	52,481	52,481	56,355	(3,874)
Services and supplies	4,600	1,600	799	801
Total Caliente contract	147,007	147,007	151,462	(4,455)
Total public safety	1,510,544	1,510,544	1,490,824	19,720
Judicial:				
District court:				
Salaries and wages	120,000	120,000	108,407	11,593
Services and supplies	287,506	287,506	209,976	77,530
Total district court	407,506	407,506	318,383	89,123
District attorney:				
Salaries and wages	231,790	231,790	223,634	8,156
Employee benefits	90,306	90,306	80,709	9,597
Services and supplies	25,000	25,000	9,081	15,919
Total district attorney	347,096	347,096	313,424	33,672

See accompanying notes to required supplementary information.

LINCOLN COUNTY, NEVADA
REQUIRED SUPPLEMENTARY INFORMATION
MAJOR FUND - GENERAL FUND
SCHEDULE OF REVENUES, EXPENDITURES AND CHANGES IN FUND BALANCE
BUDGET (BUDGETARY BASIS) AND ACTUAL (CONTINUED)
FOR THE YEAR ENDED JUNE 30, 2021

	Original Budget	Final Budget	Actual	Variance With Final Budget Positive (Negative)
Judicial (Continued):				
Law library	$ 8,000	$ 8,000	$ 6,367	$ 1,633
Public guardian	2,000	2,000	-	2,000
Public administrator	2,000	2,000	515	1,485
Justice court:				
Juvenile officers:				
Salaries and wages	44,950	44,950	34,336	10,614
Employee benefits	29,763	29,763	19,601	10,162
Services and supplies	17,766	17,766	16,227	1,539
Total juvenile officers	92,479	92,479	70,164	22,315
Alamo:				
Salaries and wages	127,088	127,088	133,745	(6,657)
Employee benefits	62,516	62,516	59,509	3,007
Services and supplies	10,396	10,396	10,390	6
Total Alamo	200,000	200,000	203,644	(3,644)
Meadow Valley:				
Salaries and wages	126,084	116,084	119,017	(2,933)
Employee benefits	69,508	69,508	59,450	10,058
Services and supplies	4,408	14,408	8,921	5,487
Total Meadow Valley	200,000	200,000	187,388	12,612
Total judicial	1,259,081	1,259,081	1,099,885	159,196
Health:				
Public Nurse:				
Salaries and wages	13,104	13,104	61,914	(48,810)
Employee benefits	1,526	1,526	-	1,526
Services and supplies	46,200	46,200	-	46,200
Total Meadow Valley	60,830	60,830	61,914	(1,084)
Animal Control:				
Services and supplies	1,000	1,000	395	605
Total health	61,830	61,830	62,309	(479)
Intergovernmental:				
Coyote Springs GID Payout:	916,243	916,243	916,193	50
Contingency	33,717	33,717	-	33,717
Total expenditures	$ 5,390,039	$ 5,390,039	$ 4,964,316	$ 425,723

See accompanying notes to required supplementary information.

LINCOLN COUNTY, NEVADA
REQUIRED SUPPLEMENTARY INFORMATION
MAJOR FUND - GENERAL FUND
SCHEDULE OF REVENUES, EXPENDITURES AND CHANGES IN FUND BALANCE
BUDGET (BUDGETARY BASIS) AND ACTUAL (CONTINUED)
FOR THE YEAR ENDED JUNE 30, 2021

	Original Budget	Final Budget	Actual	Variance With Final Budget Positive (Negative)
Excess (deficiency) of revenues over expenditures	$ (578,990)	$ (578,990)	$ 137,295	$ 716,285
Other financing sources (uses):				
Operating transfers in	16,000	16,000	-	(16,000)
Operating transfers out	(841,000)	(841,000)	(610,000)	231,000
Total other financing sources (uses)	(825,000)	(825,000)	(610,000)	215,000
Net change in fund balance	(1,403,990)	(1,403,990)	(472,705)	931,285
Fund balance:				
Beginning of year	1,578,990	1,578,990	2,340,945	761,955
End of year	$ 175,000	$ 175,000	$ 1,868,240	$ 1,693,240

See accompanying notes to required supplementary information.

LINCOLN COUNTY, NEVADA
REQUIRED SUPPLEMENTARY INFORMATION
MAJOR FUND - ROAD SPECIAL REVENUE FUND
SCHEDULE OF REVENUES, EXPENDITURES AND CHANGES IN FUND BALANCE
IN FUND BALANCE - BUDGET AND ACTUAL
FOR THE YEAR ENDED JUNE 30, 2021

	Original Budget	Final Budget	Actual	Variance With Final Budget Positive (Negative)
Revenues:				
Intergovernmental:				
Gasoline tax $2.35	$ 936,821	$ 936,821	$ 980,578	$ 43,757
Gasoline tax $1.25	538,815	538,815	566,996	28,181
Gasoline tax $1.75	45,837	45,837	54,993	9,156
Optional $0.01 tax	22,306	22,306	26,760	4,454
National forest	-	-	12,597	12,597
Total intergovernmental	1,543,779	1,543,779	1,641,924	98,145
Miscellaneous:				
Investment income	15,000	15,000	753	(14,247)
Reimbursements			151,500	151,500
Other	800	800	-	(800)
Total miscellaneous	15,800	15,800	152,253	136,453
Total revenues	1,559,579	1,559,579	1,794,177	234,598
Expenditures:				
Current:				
Public works:				
Highways and streets:				
Salaries and wages	684,065	684,065	684,892	(827)
Employee benefits	317,153	317,153	289,769	27,384
Services and supplies	801,700	801,700	593,506	208,194
Capital outlay	125,000	125,000	1,950	123,050
Total expenditures	1,927,918	1,927,918	1,570,117	357,801
Excess (deficiency) of revenues over expenditures	(368,339)	(368,339)	224,060	592,399
Other financing sources (uses):				
Operating transfers out	(100,000)	(100,000)	(100,000)	-
Net change in fund balance	(468,339)	(468,339)	124,060	592,399
Fund balance:				
Beginning of year	610,563	610,563	801,769	191,206
End of year	$ 142,224	$ 142,224	$ 925,829	$ 783,605

See accompanying notes to required supplementary information.

LINCOLN COUNTY, NEVADA
REQUIRED SUPPLEMENTARY INFORMATION
MAJOR FUND - LINCOLN COUNTY WATER DISTRICT
WATER RESOURCES SPECIAL REVENUE FUND
SCHEDULE OF REVENUES, EXPENDITURES AND CHANGES IN FUND BALANCE
IN FUND BALANCE - BUDGET AND ACTUAL
FOR THE YEAR ENDED JUNE 30, 2021

	Original Budget	Final Budget	Actual	Variance With Final Budget Positive (Negative)
Revenues:				
Miscellaneous:				
Investment income	$ 35,000	$ 35,000	$ 8,548	$ (26,452)
Expenditures:				
Current:				
General government:				
Services and supplies	-	-	-	-
Excess (deficiency) of revenues over expenditures	35,000	35,000	8,548	(26,452)
Other financing sources (uses):				
Operating transfers out:	(200,000)	(200,000)	(200,000)	-
Net change in fund balance	(165,000)	(165,000)	(191,452)	(26,452)
Fund balance:				
Beginning of year	2,676,210	2,676,210	2,781,182	104,972
End of year	$ 2,511,210	$ 2,511,210	$ 2,589,730	$ 78,520

See accompanying notes to required supplementary information.

LINCOLN COUNTY, NEVADA
REQUIRED SUPPLEMENTARY INFORMATION
MAJOR FUND - LINCOLN COUNTY LAND ACT SPECIAL USE - SPECIAL REVENUE FUND
SCHEDULE OF REVENUES, EXPENDITURES AND CHANGES IN FUND BALANCE
IN FUND BALANCE - BUDGET AND ACTUAL
FOR THE YEAR ENDED JUNE 30, 2021

	Original Budget	Final Budget	Actual	Variance With Final Budget Positive (Negative)
Revenues:				
Miscellaneous:				
Investment income	$ 6,000	$ 6,000	$ 10,402	$ 4,402
Loan interest income	-	-	12,120	12,120
Rent	30,000	30,000	2,513	(27,487)
Total revenues	36,000	36,000	25,035	(10,965)
Expenditures:				
Current:				
General government:				
Services and supplies	781,672	781,672	-	781,672
Excess (deficiency) of revenues over expenditures	(745,672)	(745,672)	25,035	770,707
Fund balance:				
Beginning of year	3,821,198	3,821,198	3,417,748	(403,450)
End of year	$ 3,075,526	$ 3,075,526	$ 3,442,783	$ 367,257

See accompanying notes to required supplementary information.

LINCOLN COUNTY, NEVADA
REQUIRED SUPPLEMENTARY INFORMATION
MAJOR FUND - COUNTY GRANT - SPECIAL REVENUE FUND
SCHEDULE OF REVENUES, EXPENDITURES AND CHANGES IN FUND BALANCE
IN FUND BALANCE - BUDGET AND ACTUAL
FOR THE YEAR ENDED JUNE 30, 2021

	Original Budget	Final Budget	Actual	Variance With Final Budget Positive (Negative)
Revenues:				
Intergovernmental:				
Grants	$ -	$ 2,930,270	$ 2,056,007	$ (874,263)
Miscellaneous:				
Investment income	-	-	2,625	2,625
Total revenues	-	2,930,270	2,058,632	(871,638)
Expenditures:				
Current:				
General government	-	1,793,109	1,204,799	588,310
Public safety	-	366,617	274,706	91,911
Public works	-	231,647	229,616	2,031
Welfare	-	242,056	220,256	21,800
Culture and recreation	-	296,841	238,990	57,851
Total expenditures	-	2,930,270	2,168,367	761,903
Excess (deficiency) of revenues over expenditures	-	-	(109,735)	(109,735)
Other financing sources (uses):				
Operating transfers in	-	-	4,847	4,847
Net change in fund balance	-	-	(104,888)	(104,888)
Fund balance:				
Beginning of year	64,145	64,145	58,234	(5,911)
End of year	$ 64,145	$ 64,145	$ (46,654)	$ (110,799)

See accompanying notes to required supplementary information.

LINCOLN COUNTY, NEVADA
REQUIRED SUPPLEMENTARY INFORMATION
RECONCILIATION OF THE GENERAL FUND (BUDGETARY BASIS)
TO THE GENERAL FUND (GAAP BASIS)
SCHEDULE OF REVENUE, EXPENDITURES, AND CHANGES IN FUND BALANCES
FOR THE YEAR ENDED JUNE 30, 2021

	General Fund Budgetary Basis	Internally Reported Funds	General Fund GAAP Basis
Revenues:			
Taxes	$ 2,423,868	-	$ 2,423,868
Licenses and permits	21,374	-	21,374
Intergovernmental	1,832,578	-	1,832,578
Charges for services	443,580	12,305	455,885
Fines and forfeitures	254,312	-	254,312
Miscellaneous	125,899	785	126,684
Total revenues	5,101,611	13,090	5,114,701
Expenditures:			
Current:			
General government	1,395,105	-	1,395,105
Public safety	1,490,824	-	1,490,824
Judicial	1,099,885	-	1,099,885
Public works	-	81,790	81,790
Health	62,309	-	62,309
Intergovernmental	916,193	-	916,193
Total expenditures	4,964,316	81,790	5,046,106
Excess (deficiency) of revenues over expenditures	137,295	(68,700)	68,595
Other financing sources (uses):			
Operating transfers in	-	75,000	75,000
Operating transfers out	(610,000)	(40,000)	(650,000)
Total other financing sources (uses)	(610,000)	35,000	(575,000)
Net change in fund balance	(472,705)	(33,700)	(506,405)
Fund balance:			
Beginning of year	2,340,945	654,382	2,995,327
End of year	$ 1,868,240	$ 620,682	$ 2,488,922

See accompanying notes to required supplementary information.

LINCOLN COUNTY, NEVADA
REQUIRED SUPPLEMENTARY INFORMATION
SCHEDULE OF CHANGES IN THE COUNTY'S TOTAL OPEB LIABILITY AND RELATED RATIOS
LAST 10 YEARS*
FOR THE YEAR ENDED JUNE 30, 2021

	6/30/2021	6/30/2020	6/30/2019	6/30/2018
Total OPEB Liability				
Service cost	$ -	$ -	$ -	$ -
Interest	14,133	12,160	17,218	27,562
Changes of benefit terms	-	-	-	-
Differences between expected and actual experience	-	117,649	-	-
Changes of assumptions or other inputs	7,595	3,745	(114,834)	(270,391)
Benefit Payments	(28,869)	(41,195)	(51,515)	(59,983)
Net Change in total OPEB liability	(7,141)	92,359	(149,131)	(302,812)
Total OPEB liability - beginning	521,004	428,645	577,776	880,588
Total OPEB liability - ending	$ 513,863	$ 521,004	$ 428,645	$ 577,776
Covered-employee payroll	$ -	$ -	$ -	$ -
Total OPEB liability as a percentage of covered-employee payroll	0.00%	0.00%	0.00%	0.00%

Note: PEBP closed to new County participants as of November 1, 2008; therefore, covered payroll is zero.

Changes of assumptions and other inputs reflect the effects of changes in the discount rate each period. The following are the discount rates used in each period.

6/30/2021	2.66
6/30/2020	2.79
6/30/2019	2.98
6/30/2018	3.13
6/30/2017	2.68

*Fiscal year 2018 was the first year of implementation. Therefore, only four years are shown.

See accompanying notes to required supplementary information.

LINCOLN COUNTY, NEVADA
REQUIRED SUPPLEMENTARY INFORMATION
SCHEDULE OF THE COUNTY'S CONTRIBUTIONS TO THE
PUBLIC EMPLOYEES' RETIREMENT SYSTEM OF THE STATE OF NEVADA
LAST 10 YEARS*
FOR THE YEAR ENDED JUNE 30, 2021

Year Ended June 30	Contractually Determined Contributions	Contributions in Relation to the Actuarially Determined Contributions	Contribution Deficiency (Excess)	Covered Employee Payroll	Contributions as a Percentage of Covered Employee Payroll
2014	$ 1,164,559	$ 1,164,559	$ -	$4,098,726	28.41%
2015	1,232,695	1,232,695	-	4,381,264	28.14%
2016	1,321,892	1,321,892	-	4,218,947	31.33%
2017	1,303,882	1,303,882	-	4,687,633	27.82%
2018	647,630	647,630	-	4,770,281	13.58%
2019	636,643	636,643	-	4,712,297	13.51%
2020	651,922	651,922	-	4,715,951	13.82%
2021	567,267	567,267	-	4,271,309	13.28%

**Information previous to 2013 is not available.*

Beginning with the year-ended 2018, all contributions shown reflect employer-paid contributions only, and employer-paid member contributions are excluded. Actuarially Determined Contributions above are based on actuarially determined contribution rates (employer portion only) from the most recent rate-setting year prior to the year shown, applied to covered payroll for year shown.

See accompanying notes to required supplementary information.

LINCOLN COUNTY, NEVADA
REQUIRED SUPPLEMENTARY INFORMATION
SCHEDULE OF THE COUNTY'S PROPORTIONATE SHARE OF THE NET PENSION LIABILITY
PUBLIC EMPLOYEES' RETIREMENT SYSTEM OF THE STATE OF NEVADA
LAST 10 YEARS*
FOR THE YEAR ENDED JUNE 30, 2021

Reporting Year Ended June 30:	County's proportion of the net pension liability	County's proportionate share of the net pension liability	County's covered-employee payroll	County's proportionate share of the net pension liability as a percentage of its covered-employee payroll	Plan fiduciary net position as a percentage of the total pension liability
2015	0.08508%	8,866,756	4,098,726	216.33%	76.31%
2016	0.08864%	10,157,192	4,381,264	231.83%	75.10%
2017	0.08800%	11,842,446	4,218,947	280.70%	72.20%
2018	0.08407%	11,180,767	4,687,633	238.52%	74.40%
2019	0.08224%	11,215,383	4,770,281	235.11%	75.20%
2020	0.07859%	10,716,781	4,712,297	227.42%	76.50%
2021	0.07586%	10,566,230	4,715,951	224.05%	77.00%

**Fiscal year 2015 was the first year of implementation, therefore, only seven years are shown.*

The County's proportionate share of the net pension liability is based upon the measurment taken on June 30th, of the prior year.

See accompanying notes to required supplementary information.

Note 1 – Explanation of Differences between General Fund (Budgetary Basis) and General Fund (GAAP Basis)

The accompanying Reconciliation of the General Fund (Budgetary Basis) to the General Fund (GAAP Basis) presents balances combined for external financial reporting purposes.

With the implementation of GASB Statement 54, *Fund Balance Reporting and Governmental Fund Type Definitions*, the budgetary basis of accounting for the General Fund differs from generally accepted accounting principles (GAAP).

Guidance in GASB Statement 54 changed the definition of Special Revenue Funds for financial reporting purposes. Pursuant to statute, budget comparisons are required using the budget adopted. Seven internally reported special revenue funds of the County (Stabilization, Planning, Rachel Jones Memorial Cemetery, Flood Control, Special Projects, Lincoln County Land Act Emergency Disaster, and Lincoln County Water Emergency Disaster) are combined with the General Fund for external reporting purposes to conform with generally accepted accounting principles.

Note 2 – Net Pension Liability

Changes in benefit terms. There have been no changes in benefit terms since the last valuation.

Changes in assumptions. Changes of assumptions and other inputs reflect the effects of changes in the discount rate each period.

Note 3 – Other Post-Employment Benefits Liability

Changes in benefit terms. There have been no changes in benefit terms since the last valuation.

Changes in assumptions. Changes of assumptions and other inputs reflect the effects of changes in the discount rate each period.

LINCOLN COUNTY, NEVADA
NONMAJOR GOVERNMENTAL FUNDS
COMBINING BALANCE SHEET
JUNE 30, 2021

	Nonmajor Special Revenue Funds	Nonmajor Capital Projects Funds	Totals
ASSETS			
Pooled cash and investments	$ 9,992,522	$ 1,584,570	$ 11,577,092
Interest receivable	17,491	5,165	22,656
Taxes receivable	14,755	838	15,593
Due from other governments	118,087	-	118,087
Due from others	240,625	-	240,625
Prepaid expense	25,549	-	25,549
Interfund receivable	150,000	-	150,000
Total assets	$ 10,559,029	$ 1,590,573	$ 12,149,602
LIABILITIES			
Accounts payable	$ 118,971	$ 2,940	$ 121,911
Accrued payroll and benefits	32,315	-	32,315
Unearned revenue	131,260	-	131,260
Due to other funds	1,739	-	1,739
Total liabilities	284,285	2,940	287,225
DEFERRED INFLOWS OF RESOURCES			
Unavailable revenue - property taxes	5,807	704	6,511
FUND BALANCE			
Nonspendable	25,549	-	25,549
Restricted for:			
Capital projects	-	1,586,929	1,586,929
Unincorporated towns	424,223	-	424,223
Multi-species conservation	905,030	-	905,030
General government	77,798	-	77,798
Public safety	64,702	-	64,702
Judicial	328,805	-	328,805
Public works	932,277	-	932,277
Health	114	-	114
Welfare	1,050,131	-	1,050,131
Culture and recreation	312,234	-	312,234
Community support	505,884	-	505,884
Intergovernmental	6,895	-	6,895
Committed for:			
Land act	138,500	-	138,500
Water	1,597,725	-	1,597,725
Lincoln County Water District	1,912,186		1,912,186
General government	1,941,693	-	1,941,693
Public works	46,930	-	46,930
Unassigned	(1,739)	-	(1,739)
Total fund balance	10,268,937	1,586,929	11,855,866
Total liabilities, deferred inflows of resources, and fund balance	$ 10,559,029	$ 1,590,573	$ 12,149,602

LINCOLN COUNTY, NEVADA
NONMAJOR GOVERNMENTAL FUNDS
COMBINING STATEMENT OF REVENUES, EXPENDITURES,
AND CHANGES IN FUND BALANCE
FOR THE YEAR ENDED JUNE 30, 2021

	Nonmajor Special Revenue Funds	Nonmajor Capital Projects Funds	Totals
Revenues:			
Taxes	$ 859,901	$ 119,942	$ 979,843
Licenses and permits	5,310	-	5,310
Intergovernmental	1,581,034	107	1,581,141
Charges for services	252,882	-	252,882
Fines and forfeitures	27,649	-	27,649
Special assessment	-	243,281	243,281
Miscellaneous	524,749	6,386	531,135
Total revenues	3,251,525	369,716	3,621,241
Expenditures:			
Current:			
General government	925,510	-	925,510
Public safety	2,433	-	2,433
Judicial	45,305	-	45,305
Public works	192,150	-	192,150
Health	186,314	-	186,314
Welfare	511,316	-	511,316
Culture and recreation	347,817	-	347,817
Community support	254,222	-	254,222
Intergovernmental	128,519	8,408	136,927
Capital outlay	-	283,065	283,065
Debt service:			
Principal	-	75,283	75,283
Interest	-	7,628	7,628
Total expenditures	2,593,586	374,384	2,967,970
Excess (deficiency) of revenues over expenditures	657,939	(4,668)	653,271
Other financing sources (uses):			
Operating transfers in	319,339	203,997	523,336
Operating transfers out	(610,186)	(98,997)	(709,183)
Sale of capital assets	-	8,500	8,500
Total other financing sources (uses)	(290,847)	113,500	(177,347)
Net change in fund balance before special items	367,092	108,832	475,924
Special items:			
Disposal of Ambulance	(74,546)	(17,614)	(92,160)
Net change in fund balance	292,546	91,218	383,764
Fund balance:			
Beginning of year	9,976,391	1,495,711	11,472,102
End of year	$ 10,268,937	$ 1,586,929	$ 11,855,866

LINCOLN COUNTY, NEVADA
RECONCILIATION OF THE GENERAL FUND (BUDGETARY BASIS)
TO THE GENERAL FUND (GAAP BASIS)
BALANCE SHEET
June 30, 2021

	General Fund Budgetary Basis	Internally Reported Funds	General Fund GAAP Basis
ASSETS			
Pooled cash and investments	$ 1,848,128	$ 627,405	$ 2,475,533
Interest receivable	5,062	706	5,768
Taxes receivable	16,763	-	16,763
Due from other governments	323,513	-	323,513
Due from other funds	22,634	-	22,634
Total assets	$ 2,216,100	$ 628,111	$ 2,844,211
LIABILITIES			
Accounts payable	$ 102,545	$ 5,234	$ 107,779
Accrued payroll and benefits	231,268	2,195	233,463
Total liabilities	333,813	7,429	341,242
DEFERRED INFLOWS OF RESOURCES			
Unavailable revenue - property taxes	14,047	-	14,047
FUND BALANCE			
Restricted for:			
Stabilization	-	137,299	137,299
Rachel Jones Cemetery	-	827	827
General government	-	318,428	318,428
Committed for:			
Land Act	-	9,414	9,414
Water	-	66,542	66,542
Planning	-	50,062	50,062
Flood Control	-	38,110	38,110
Assigned for:			
Subsequent year	1,085,330	-	1,085,330
Unassigned	782,910	-	782,910
Total fund balance	1,868,240	620,682	2,488,922
Total liabilities, deferred inflows of resources, and fund balance	$ 2,216,100	$ 628,111	$ 2,844,211

LINCOLN COUNTY, NEVADA
MAJOR FUND - GENERAL FUND (BUDGETARY BASIS) (001)
COMPARATIVE BALANCE SHEETS
JUNE 30, 2021 AND 2020

	2021	2020
ASSETS		
Pooled cash and investments	$ 1,848,128	$ 2,323,942
Interest receivable	5,062	6,680
Taxes receivable	16,763	30,333
Due from other governments	323,513	291,829
Due from other funds	22,634	3,195
Total assets	$ 2,216,100	$ 2,655,979
LIABILITIES		
Accounts payable	$ 102,545	$ 70,653
Accrued payroll and benefits	231,268	217,868
Total liabilities	333,813	288,521
DEFERRED INFLOWS OF RESOURCES		
Unavailable revenue - property taxes	14,047	26,513
FUND BALANCE		
Restricted for Coyote Springs GID	-	916,307
Assigned for subsequent year	1,085,330	1,424,638
Unassigned	782,910	-
Total fund balance	1,868,240	2,340,945
Total liabilities, deferred inflows of resources, and fund balance	$ 2,216,100	$ 2,655,979

LINCOLN COUNTY, NEVADA
MAJOR FUND - GENERAL FUND (001)
SCHEDULE OF REVENUES, EXPENDITURES, AND CHANGES IN FUND BALANCE
BUDGET (BUDGETARY BASIS) AND ACTUAL
FOR THE YEAR ENDED JUNE 30, 2021
(With Comparative Actual Amounts for the Year Ended June 30, 2020)

	2021 Budget	2021 Actual	Variance - Positive (Negative)	2020 Actual
Revenues:				
Taxes	$ 2,402,004	$ 2,423,868	$ 21,864	$ 2,268,713
Licenses and permits	18,150	21,374	3,224	21,096
Intergovernmental	1,675,808	1,832,578	156,770	2,605,091
Charges for services	393,350	443,580	50,230	356,374
Fines and forfeitures	176,737	254,312	77,575	254,615
Miscellaneous	145,000	125,899	(19,101)	290,543
Total revenues	4,811,049	5,101,611	290,562	5,796,432
Expenditures:				
Current:				
General government	1,608,624	1,395,105	213,519	1,466,808
Public safety	1,510,544	1,490,824	19,720	1,731,728
Judicial	1,259,081	1,099,885	159,196	1,098,278
Health	61,830	62,309	(479)	61,876
Intergovernmental	916,243	916,193	50	-
Contingency	33,717	-	33,717	-
Total expenditures	5,390,039	4,964,316	425,723	4,358,690
Excess (deficiency) of revenues over expenditures	(578,990)	137,295	716,285	1,437,742
Other financing sources (uses):				
Operating transfers in	16,000	-	(16,000)	-
Operating transfers out	(841,000)	(610,000)	231,000	(50,000)
Total other financing sources (uses)	(825,000)	(610,000)	215,000	(50,000)
Net change in fund balance	(1,403,990)	(472,705)	931,285	1,387,742
Fund balance:				
Beginning of year	1,578,990	2,340,945	761,955	953,203
End of year	$ 175,000	$ 1,868,240	$ 1,693,240	$ 2,340,945

LINCOLN COUNTY, NEVADA
MAJOR FUND - GENERAL FUND (001)
SCHEDULE OF REVENUES COMPARED TO BUDGET (BUDGETARY BASIS)
FOR THE YEAR ENDED JUNE 30, 2021
(With Comparative Actual Amounts for the Year Ended June 30, 2020)

	2021 Budget	2021 Actual	Variance - Positive (Negative)	2020 Actual
Revenues:				
Taxes:				
Property taxes	$ 2,402,004	$ 2,423,868	$ 21,864	$ 2,268,713
Licenses and permits:				
Business licenses	7,200	12,195	4,995	10,685
Liquor licenses	5,100	4,750	(350)	6,070
Gaming licenses	5,200	3,900	(1,300)	4,005
Marriage licenses	650	529	(121)	336
Total licenses and permits	18,150	21,374	3,224	21,096
Intergovernmental:				
Gaming tax	64,625	114,306	49,681	127,467
Private car line tax	4,100	-	(4,100)	-
Virgin Valley Water District	7,000	33,679	26,679	10,856
Southern Nevada Water District	-	2,426	2,426	-
Consolidated tax	1,419,586	1,479,108	59,522	1,420,022
Grants	56,262	76,257	19,995	21,610
Lincoln County Water District contract	36,000	36,000	-	18,000
Coyote Springs GID dissolution	-	-	-	916,307
Marijuana fees	88,235	88,235	-	88,270
Fish and wildlife	-	2,567	2,567	2,559
Total intergovernmental	1,675,808	1,832,578	156,770	2,605,091
Charges for services:				
Clerk fees	14,000	9,446	(4,554)	9,543
Recorder fees	50,000	59,663	9,663	51,923
Assessor commissions	65,500	35,142	(30,358)	40,986
Sheriff fees	2,500	13,475	10,975	9,830
Tax penalties and costs	45,000	65,620	20,620	50,574
District attorney fees	14,500	6,056	(8,444)	1
Civil fees	-	2,878	2,878	3,217
Security contract	122,000	183,000	61,000	122,000
Caliente police contract	75,000	64,800	(10,200)	64,800
Caliente court contract	3,850	3,500	(350)	3,500
Spay & neuter license plate fees	1,000	-	(1,000)	-
Total charges for services	393,350	443,580	50,230	356,374
Fines and forfeitures:				
Fines and forfeitures	176,737	254,312	77,575	254,615
Miscellaneous:				
Investment income	100,000	7,861	(92,139)	222,243
Rent, sales, refunds	40,000	51,517	11,517	32,742
Sale of county property	-	59,889	59,889	-
Excess proceeds	-	-	-	24,697
Other	5,000	6,632	1,632	10,861
Total miscellaneous	145,000	125,899	(19,101)	290,543
Total revenues	$ 4,811,049	$ 5,101,611	$ 290,562	$ 5,796,432

LINCOLN COUNTY, NEVADA
MAJOR FUND - GENERAL FUND (001)
SCHEDULE OF EXPENDITURES COMPARED TO BUDGET (BUDGETARY BASIS)
FOR THE YEAR ENDED JUNE 30, 2021
(With Comparative Actual Amounts for the Year Ended June 30, 2020)

	2021 Budget	2021 Actual	Variance - Positive (Negative)	2020 Actual
Expenditures:				
Current:				
General government:				
County commissioners:				
Salaries and wages	$ 113,413	$ 102,077	$ 11,336	$ 106,505
Employee benefits	76,705	66,557	10,148	68,948
Services and supplies	31,285	9,128	22,157	24,430
Total county commissioners	221,403	177,762	43,641	199,883
Executive officer:				
Salaries and wages	43,761	24,420	19,341	39,066
Employee benefits	23,342	24,695	(1,353)	23,846
Services and supplies	7,776	828	6,948	3,394
Total executive officer	74,879	49,943	24,936	66,306
Clerk:				
Salaries and wages	116,870	112,234	4,636	108,256
Employee benefits	53,968	51,030	2,938	48,888
Services and supplies	47,500	26,972	20,528	10,912
Total clerk	218,338	190,236	28,102	168,056
Treasurer:				
Salaries and wages	119,896	121,600	(1,704)	118,043
Employee benefits	54,913	52,051	2,862	53,118
Services and supplies	17,100	8,232	8,868	11,669
Total treasurer	191,909	181,883	10,026	182,830
Auditor and recorder:				
Salaries and wages	135,860	131,408	4,452	134,367
Employee benefits	68,028	60,295	7,733	65,811
Services and supplies	22,080	8,767	13,313	12,530
Total auditor and recorder	225,968	200,470	25,498	212,708
Assessor:				
Salaries and wages	145,503	145,223	280	159,493
Employee benefits	70,789	63,643	7,146	69,694
Services and supplies	15,624	10,022	5,602	11,776
Total assessor	231,916	218,888	13,028	240,963
Grant administrator:				
Salaries and wages	-	-	-	19,737
Employee benefits	-	-	-	7,486
Services and supplies	-	-	-	1,701
Total grant administrator	$ -	$ -	$ -	$ 28,924

LINCOLN COUNTY, NEVADA
MAJOR FUND - GENERAL FUND (001)
SCHEDULE OF EXPENDITURES COMPARED TO BUDGET (BUDGETARY BASIS)
FOR THE YEAR ENDED JUNE 30, 2021
(With Comparative Actual Amounts for the Year Ended June 30, 2020)

	2021 Budget	2021 Actual	Variance - Positive (Negative)	2020 Actual
General government (Continued):				
Business license:				
Salaries and wages	$ 6,897	$ 6,235	$ 662	$ 7,808
Employee benefits	2,612	1,775	837	2,055
Services and supplies	1,500	912	588	682
Total business license	11,009	8,922	2,087	10,545
Buildings and grounds:				
Pioche:				
Salaries and wages	27,349	29,408	(2,059)	39,421
Employee benefits	5,460	1,855	3,605	3,553
Services and supplies	122,310	119,145	3,165	101,469
Total Pioche	155,119	150,408	4,711	144,443
Alamo:				
Salaries and wages	25,743	16,101	9,642	8,785
Employee benefits	7,584	13,745	(6,161)	13,435
Services and supplies	16,000	14,710	1,290	10,026
Total Alamo	49,327	44,556	4,771	32,246
Total buildings and grounds	204,446	194,964	9,482	176,689
Other general expenses:				
Employee benefits	42,000	24,448	17,552	28,141
Services and supplies	186,756	147,589	39,167	151,763
Total other general expenses	228,756	172,037	56,719	179,904
Total general government	$ 1,608,624	$ 1,395,105	$ 213,519	$ 1,466,808

LINCOLN COUNTY, NEVADA
MAJOR FUND - GENERAL FUND (001)
SCHEDULE OF EXPENDITURES COMPARED TO BUDGET (BUDGETARY BASIS)
FOR THE YEAR ENDED JUNE 30, 2021
(With Comparative Actual Amounts for the Year Ended June 30, 2020)

	2021 Budget	2021 Actual	Variance - Positive (Negative)	2020 Actual
Public safety:				
Sheriff:				
Salaries and wages	$ 697,057	$ 718,517	$ (21,460)	$ 829,904
Employee benefits	442,078	433,747	8,331	521,446
Services and supplies	188,681	131,045	57,636	200,116
Capital outlay	-	23,932	(23,932)	-
Total sheriff	1,327,816	1,307,241	20,575	1,551,466
Emergency management:				
Salaries and wages	2,794	15,044	(12,250)	25,075
Employee benefits	6,927	5,259	1,668	10,562
Services and supplies	26,000	11,818	14,182	3,242
Total emergency management	35,721	32,121	3,600	38,879
Caliente contract:				
Salaries and wages	92,926	94,308	(1,382)	87,416
Employee benefits	52,481	56,355	(3,874)	53,092
Services and supplies	1,600	799	801	875
Total Caliente contract	147,007	151,462	(4,455)	141,383
Total public safety	1,510,544	1,490,824	19,720	1,731,728
Judicial:				
District court:				
Salaries and wages	120,000	108,407	11,593	128,945
Services and supplies	287,506	209,976	77,530	181,829
Total district court	407,506	318,383	89,123	310,774
District attorney:				
Salaries and wages	231,790	223,634	8,156	232,201
Employee benefits	90,306	80,709	9,597	88,405
Services and supplies	25,000	9,081	15,919	14,777
Total district attorney	$ 347,096	$ 313,424	$ 33,672	$ 335,383

LINCOLN COUNTY, NEVADA
MAJOR FUND - GENERAL FUND (001)
SCHEDULE OF EXPENDITURES COMPARED TO BUDGET (BUDGETARY BASIS)
FOR THE YEAR ENDED JUNE 30, 2021
(With Comparative Actual Amounts for the Year Ended June 30, 2020)

	2021 Budget	2021 Actual	Variance - Positive (Negative)	2020 Actual
Judicial (Continued):				
Law library	$ 8,000	$ 6,367	$ 1,633	$ 6,762
Public guardian	2,000	-	2,000	-
Public administrator	2,000	515	1,485	551
Juvenile officers:				
Salaries and wages	44,950	34,336	10,614	-
Employee benefits	29,763	19,601	10,162	-
Services and supplies	17,766	16,227	1,539	42,221
Total juvenile officers	92,479	70,164	22,315	42,221
Alamo:				
Salaries and wages	127,088	133,745	(6,657)	130,986
Employee benefits	62,516	59,509	3,007	61,747
Services and supplies	10,396	10,390	6	17,210
Total Alamo	200,000	203,644	(3,644)	209,943
Meadow Valley:				
Salaries and wages	116,084	119,017	(2,933)	116,076
Employee benefits	69,508	59,450	10,058	63,937
Services and supplies	14,408	8,921	5,487	12,631
Total Meadow Valley	200,000	187,388	12,612	192,644
Total judicial	1,259,081	1,099,885	159,196	1,098,278
Health:				
Public Nurse:				
Salaries and wages	13,104	61,914	(48,810)	14,483
Employee benefits	1,526	-	1,526	1,527
Services and supplies	46,200	-	46,200	45,866
Total public nurse	60,830	61,914	(1,084)	61,876
Animal Control:				
Services and supplies	1,000	395	605	-
Total health	61,830	62,309	(479)	61,876
Intergovernmental:				
Coyote Springs GID Payout:	916,243	916,193	50	-
Contingency	33,717	-	33,717	-
Total expenditures	$ 5,390,039	$ 4,964,316	$ 425,723	$ 4,358,690

LINCOLN COUNTY, NEVADA
MAJOR FUND - ROAD SPECIAL REVENUE FUND (009)
COMPARATIVE BALANCE SHEETS
JUNE 30, 2021 AND 2020

	2021	2020
ASSETS		
Pooled cash and investments	$ 816,216	$ 680,946
Interest receivable	701	1,068
Due from other governments	296,039	246,465
Total assets	$ 1,112,956	$ 928,479
LIABILITIES		
Accounts payable	$ 128,469	$ 75,835
Accrued payroll and benefits	58,658	50,875
Total liabilities	187,127	126,710
FUND BALANCE		
Restricted	925,829	801,769
Total liabilities and fund balance	$ 1,112,956	$ 928,479

LINCOLN COUNTY, NEVADA
MAJOR FUND - ROAD SPECIAL REVENUE FUND (009)
SCHEDULE OF REVENUES, EXPENDITURES, AND CHANGES IN FUND BALANCE - BUDGET (GAAP BASIS) AND ACTUAL
FOR THE YEAR ENDED JUNE 30, 2021
(With Comparative Actual Amounts for the Year Ended June 30, 2020)

	2021 Budget	2021 Actual	Variance - Positive (Negative)	2020 Actual
Revenues:				
Intergovernmental:				
Gasoline tax $2.35	$ 936,821	$ 980,578	$ 43,757	$ 972,480
Gasoline tax $1.25	538,815	566,996	28,181	560,862
Gasoline tax $1.75	45,837	54,993	9,156	50,546
Optional $0.01 tax	22,306	26,760	4,454	24,516
National forest	-	12,597	12,597	14,947
Total intergovernmental	1,543,779	1,641,924	98,145	1,623,351
Miscellaneous:				
Investment income	15,000	753	(14,247)	17,464
Equipment rental	-	151,500	151,500	-
Other	800	-	(800)	-
Total miscellaneous	15,800	152,253	136,453	17,464
Total revenues	1,559,579	1,794,177	234,598	1,640,815
Expenditures:				
Current:				
Public works:				
Highways and streets:				
Salaries and wages	684,065	684,892	(827)	660,308
Employee benefits	317,153	289,769	27,384	294,415
Services and supplies	801,700	593,506	208,194	660,597
Capital outlay	125,000	1,950	123,050	-
Total expenditures	1,927,918	1,570,117	357,801	1,615,320
Excess (deficiency) of revenues over expenditures	(368,339)	224,060	592,399	25,495
Other financing sources (uses):				
Operating transfers out	(100,000)	(100,000)	-	(100,000)
Sale of capital assets	-	-	-	1,000
Total other financing sources (uses)	(100,000)	(100,000)	-	(99,000)
Net change in fund balance	(468,339)	124,060	592,399	(73,505)
Fund balance:				
Beginning of year	610,563	801,769	191,206	875,274
End of year	$ 142,224	$ 925,829	$ 783,605	$ 801,769

LINCOLN COUNTY, NEVADA
MAJOR FUND - LINCOLN COUNTY WATER DISTRICT (103)
WATER RESOURCES SPECIAL REVENUE FUND
COMPARATIVE BALANCE SHEETS
JUNE 30, 2021 AND 2020

	2021	2020
ASSETS		
Pooled cash and investments	$ 2,600,625	$ 2,768,999
Interest receivable	10,000	12,183
Total assets	$ 2,610,625	$ 2,781,182
LIABILITIES		
Due to other funds	$ 20,895	$ -
FUND BALANCE		
Committed	2,589,730	2,781,182
Total liabilities and fund balance	$ 2,610,625	$ 2,781,182

LINCOLN COUNTY, NEVADA
MAJOR FUND - LINCOLN COUNTY WATER DISTRICT (103)
WATER RESOURCES SPECIAL REVENUE FUND
SCHEDULE OF REVENUES, EXPENDITURES, AND CHANGES IN FUND BALANCE - BUDGET (GAAP BASIS) AND ACTUAL
FOR THE YEAR ENDED JUNE 30, 2021
(With Comparative Actual Amounts for the Year Ended June 30, 2020)

	2021 Budget	2021 Actual	Variance - Positive (Negative)	2020 Actual
Revenues:				
Miscellaneous:				
Investment income	$ 35,000	$ 8,548	$ (26,452)	$ 139,972
Expenditures:				
Current:				
General government:				
Services and supplies	-	-	-	-
Excess (deficiency) of revenues over expenditures	35,000	8,548	(26,452)	139,972
Other financing sources (uses):				
Operating transfers out	(200,000)	(200,000)	-	(200,000)
Net change in fund balance	(165,000)	(191,452)	(26,452)	(60,028)
Fund balance:				
Beginning of year	2,676,210	2,781,182	104,972	2,841,210
End of year	$ 2,511,210	$ 2,589,730	$ 78,520	$ 2,781,182

LINCOLN COUNTY, NEVADA
MAJOR FUND - LINCOLN COUNTY LAND ACT - SPECIAL USE SPECIAL REVENUE FUND (097)
COMPARATIVE BALANCE SHEETS
JUNE 30, 2021 AND 2020

	2021	2020
ASSETS		
Pooled cash and investments	$ 2,894,573	$ 2,997,926
Interest receivable	10,872	5,718
Interfund receivable	537,338	600,921
Total assets	$ 3,442,783	$ 3,604,565
LIABILITIES		
Accrued payroll and benefits	$ -	$ 186,817
FUND BALANCE		
Committed	3,442,783	3,417,748
Total liabilities and fund balance	$ 3,442,783	$ 3,604,565

LINCOLN COUNTY, NEVADA
MAJOR FUND - LINCOLN COUNTY LAND ACT - SPECIAL USE SPECIAL REVENUE FUND (097)
SCHEDULE OF REVENUES, EXPENDITURES, AND CHANGES
IN FUND BALANCE - BUDGET (GAAP BASIS) AND ACTUAL
FOR THE YEAR ENDED JUNE 30, 2021
(With Comparative Actual Amounts for the Year Ended June 30, 2020)

	2021 Budget	2021 Actual	Variance - Positive (Negative)	2020 Actual
Revenues:				
Intergovernmental:				
Grant	$ -	$ -	$ -	$ 10,871
Miscellaneous:				
Investment income	6,000	10,402	4,402	93,521
Loan interest income	-	12,120	12,120	7,189
Rent	30,000	2,513	(27,487)	30,276
Total miscellaneous	36,000	25,035	(10,965)	130,986
Total revenues	36,000	25,035	(10,965)	141,857
Expenditures:				
Current:				
General government:				
Salaries and wages	-	-	-	179,116
Employee benefits	-	-	-	7,701
Service and supplies	781,672	-	781,672	397,490
Total general government	781,672	-	781,672	584,307
Excess (deficiency) of revenues over expenditures	(745,672)	25,035	770,707	(442,450)
Other financing sources (uses):				
Operating transfers in	-	-	-	151
Net change in fund balance	(745,672)	25,035	770,707	(442,299)
Fund balance:				
Beginning of year	3,821,198	3,417,748	(403,450)	3,860,047
End of year	$ 3,075,526	$ 3,442,783	$ 367,257	$ 3,417,748

LINCOLN COUNTY, NEVADA
MAJOR FUND - COUNTY GRANT SPECIAL REVENUE FUND (023)
COMPARATIVE BALANCE SHEETS
JUNE 30, 2021 AND 2020

	2021	2020
ASSETS		
Pooled cash and investments	$ 450,730	$ 47,488
Interest receivable	1,075	159
Due from other governments	369,708	368,298
Total assets	$ 821,513	$ 415,945
LIABILITIES		
Accounts payable	$ 53,770	$ 95,871
Accrued payroll and benefits	21,669	19,422
Unearned revenue	681,127	120,912
Total liabilities	756,566	236,205
DEFERRED INFLOWS OF RESOURCES		
Unavailable revenue - grant revenue	111,601	121,506
FUND BALANCE		
Committed	(46,654)	58,234
Total liabilities, deferred inflows of resources, and fund balance	$ 821,513	$ 415,945

LINCOLN COUNTY, NEVADA
MAJOR FUND - COUNTY GRANT SPECIAL REVENUE FUND (023)
SCHEDULE OF REVENUES, EXPENDITURES, AND CHANGES
IN FUND BALANCE - BUDGET (GAAP BASIS) AND ACTUAL
FOR THE YEAR ENDED JUNE 30, 2021
(With Comparative Actual Amounts for the Year Ended June 30, 2020)

	2021 Budget	2021 Actual	Variance - Positive (Negative)	2020 Actual
Revenues:				
Intergovernmental:				
Grants	$ 2,930,270	$ 2,056,007	$ (874,263)	$ 915,171
Miscellaneous:				
Investment income	-	2,625	2,625	1,321
Total revenues	2,930,270	2,058,632	(871,638)	916,492
Expenditures:				
Current:				
General government	1,793,109	1,204,799	588,310	335,427
Public safety	366,617	274,706	91,911	234,932
Public works	231,647	229,616	2,031	125,206
Welfare	242,056	220,256	21,800	106,227
Culture and recreation	296,841	238,990	57,851	174,446
Total expenditures	2,930,270	2,168,367	761,903	976,238
Excess (deficiency) of revenues over expenditures	-	(109,735)	(109,735)	(59,746)
Other financing sources (uses):				
Operating transfers in	-	4,847	4,847	53,835
Net change in fund balance	-	(104,888)	(104,888)	(5,911)
Fund balance:				
Beginning of year	64,145	58,234	(5,911)	64,145
End of year	$ 64,145	$ (46,654)	$ (110,799)	$ 58,234

LINCOLN COUNTY, NEVADA
MAJOR FUND - DETENTION CENTER ENTERPRISE FUND (064)
STATEMENT OF NET POSITION
JUNE 30, 2021 AND 2020

	2021	2020
ASSETS		
Current assets:		
Pooled cash and investments	$ 92,356	$ 59,969
Accounts receivable	4,575	148,575
Total current assets	96,931	208,544
Capital assets:		
Property, plant and equipment (net of depreciation)	749,999	787,218
Total assets	846,930	995,762
DEFERRED OUTFLOWS OF RESOURCES		
Deferred net pension charge	267,955	399,544
LIABILITIES		
Current liabilities:		
Accounts payable	11,843	11,194
Accrued payroll and benefits	94,772	212,007
Accrued compensated absences	62,387	77,624
Total current liabilities	169,002	300,825
Non-current liabilities:		
Accrued compensated absences	51,043	56,210
Net pension liability	3,071,179	3,126,874
Total non-current liabilities	3,122,222	3,183,084
Total liabilities	3,291,224	3,483,909
DEFERRED INFLOWS OF RESOURCES		
Deferred net pension charge	396,852	414,682
NET POSITION		
Invested in capital assets, net of related debt	749,999	787,218
Unrestricted	(3,323,190)	(3,290,503)
Total net position	$ (2,573,191)	$ (2,503,285)

LINCOLN COUNTY, NEVADA
MAJOR FUND - DETENTION CENTER ENTERPRISE FUND (064)
SCHEDULE OF REVENUES, EXPENSES, AND CHANGES IN NET POSITION - BUDGET (GAAP BASIS) AND ACTUAL
FOR THE YEAR ENDED JUNE 30, 2021
(With Comparative Actual Amounts for the Year Ended June 30, 2020)

	2021 Budget	2021 Actual	Variance - Positive (Negative)	2020 Actual
Revenues:				
Charges for services:				
Inmate fees	$ 84,000	$ 67,317	$ (16,683)	$ 1,873,065
Operating expenses:				
Public safety:				
Jail:				
Salaries and wages	403,104	402,289	815	904,454
Employee benefits	282,185	353,422	(71,237)	573,363
Services and supplies	118,000	131,475	(13,475)	311,826
Depreciation	65,000	44,011	20,989	44,287
Total jail	868,289	931,197	(62,908)	1,833,930
Dispatch:				
Salaries and wages	197,195	167,851	29,344	217,025
Employee benefits	61,320	47,396	13,924	69,242
Services and supplies	5,500	4,692	808	6,888
Total dispatch	264,015	219,939	44,076	293,155
Total operating expenses	1,132,304	1,151,136	(18,832)	2,127,085
Operating income (loss)	(1,048,304)	(1,083,819)	(35,515)	(254,020)
Non-operating revenues (expenses):				
Grant	7,913	7,913	-	-
Operating transfers in	1,006,000	1,006,000	-	60,000
Total non-operating revenues (expenses)	1,013,913	1,013,913	-	60,000
Changes in net position	$ (34,391)	(69,906)	$ (35,515)	(194,020)
Net position:				
Beginning of year		(2,503,285)		(2,309,265)
End of year		$ (2,573,191)		$ (2,503,285)

LINCOLN COUNTY, NEVADA
MAJOR FUND - DETENTION CENTER ENTERPRISE FUND (064)
COMPARATIVE STATEMENT OF CASH FLOWS
JUNE 30, 2021 AND 2020

	2021	2020
Cash flows from operating activities:		
Cash received from customers	$ 211,317	$ 1,885,294
Cash paid for services and supplies	(135,518)	(329,385)
Cash paid for salaries and benefits	(1,050,533)	(1,690,694)
Net cash provided (used) by operating activities	(974,734)	(134,785)
Cash flows from noncapital financing activities:		
Operating transfers in	1,006,000	60,000
Cash flows from capital and related financing activities:		
Purchases of capital assets	(6,792)	-
Grant income	7,913	-
Net cash (used) by capital and related financing activities	1,121	-
Net change in cash and cash equivalents	32,387	(74,785)
Cash:		
Beginning of year	59,969	134,754
End of year	$ 92,356	$ 59,969
Reconciliation of operating income (loss) to net cash provided (used) by operating activities:		
Operating income (loss)	$ (1,083,819)	$ (254,020)
Adjustments to reconcile operating income (loss) to net cash provided (used) by operating activities:		
Depreciation expense	44,011	44,287
(Increase) decrease in accounts receivables	144,000	12,229
(Increase) decrease in deferred outflows net pension charge	131,589	20,441
Increase (decrease) in accounts payable	649	(10,671)
Increase (decrease) in accrued payroll and benefits	(117,235)	80,371
Increase (decrease) in accrued compensated absences	(20,404)	(42,831)
Increase (decrease) in net pension liability	(55,695)	(120,876)
Increase (decrease) in deferred inflows net pension charge	(17,830)	136,285
Total adjustments	109,085	119,235
Net cash provided (used) by operating activities	$ (974,734)	$ (134,785)

LINCOLN COUNTY, NEVADA
MAJOR SOLID WASTE ENTERPRISE FUND (067, 130)
STATEMENT OF NET POSITION
JUNE 30, 2021

	2021	2020
ASSETS		
Current assets:		
Pooled cash and investments	$ 563,388	$ 640,194
Accounts receivable	122,317	131,219
Interest receivable	100	133
Restricted assets:		
Pooled cash and investments	93,446	83,287
Capital assets:		
Land	200,000	200,000
Property and equipment (net of depreciation)	814,386	771,259
Total assets	1,793,637	1,826,092
DEFERRED OUTFLOWS OF RESOURCES		
Deferred net pension charge	20,114	20,066
LIABILITIES		
Current liabilities:		
Accounts payable	38,309	7,525
Accrued payroll and benefits	20,437	17,898
Accrued compensated absences	11,294	8,702
Interfund payable	80,218	83,802
Accrued interest payable	11,730	8,174
Total current liabilities	161,988	126,101
Non-current liabilities:		
Landfill closure and postclosure costs	90,000	80,000
Interfund payable	607,120	687,119
Accrued compensated absences	9,242	5,801
Net pension liability	-	-
Total non-current liabilities	706,362	772,920
Total liabilities	868,350	899,021
DEFERRED INFLOWS OF RESOURCES		
Deferred net pension charge	2,760	3,749
NET POSITION		
Invested in capital assets, net of related debt	327,048	200,338
Unrestricted	615,593	743,050
Total net position	$ 942,641	$ 943,388

LINCOLN COUNTY, NEVADA
MAJOR SOLID WASTE ENTERPRISE FUND (067,130)
SCHEDULE OF REVENUES, EXPENSES, AND CHANGES IN NET POSITION - BUDGET (GAAP BASIS) AND ACTUAL
FOR THE YEAR ENDED JUNE 30, 2021
(With Comparative Actual Amounts for the Year Ended June 30, 2020)

	2021		Variance-Positive	2020
	Budget	Actual	(Negative)	Actual
Operating revenues:				
Charges for services	$ 614,000	$ 571,565	$ (42,435)	$ 570,479
Operating expenses:				
Sanitation:				
Salaries and wages	243,611	271,942	(28,331)	241,228
Employee benefits	102,647	94,999	7,648	95,898
Service and supplies	133,900	122,010	11,890	109,723
Closure and postclosure landfill costs	20,000	10,000	10,000	20,000
Depreciation	60,000	98,677	(38,677)	92,762
Total operating expenses	560,158	597,628	(37,470)	559,611
Operating income (loss)	53,842	(26,063)	(79,905)	10,868
Non-operating revenues (expenses):				
Investment income	-	127	127	2,169
Special assessment - debt	40,000	40,865	865	40,260
Interest expense	(18,565)	(15,676)	2,889	(15,363)
Total non-operating revenues (expenses)	21,435	25,316	3,881	27,066
Change in net position	$ 75,277	(747)	$ (76,024)	37,934
Net Position:				
Beginning of year		943,388		905,454
End of year		$ 942,641		$ 943,388

LINCOLN COUNTY, NEVADA
MAJOR SOLID WASTE ENTERPRISE FUND (067,130)
STATEMENT OF CASH FLOWS
FOR THE YEAR ENDED JUNE 30, 2021

	2021	2020
Cash flows from operating activities:		
Cash received from customers	$ 580,467	$ 581,314
Cash paid for services and supplies	(91,226)	(112,758)
Cash paid for salaries and benefits	(359,406)	(336,042)
Net cash provided (used) by operating activities	129,835	132,514
Cash flows from capital and related financing activities:		
Purchases of capital assets	(141,804)	(475,933)
Special assessment - debt	40,865	40,260
Interfund payable	(83,583)	410,921
Interest paid	(12,120)	(7,189)
Net cash provided by investing activities	(196,642)	(31,941)
Cash flows from investing activities:		
Investment income	160	2,169
Net change in cash and cash equivalents	(66,647)	102,742
Cash:		
Beginning of year	723,481	620,739
End of year	$ 656,834	$ 723,481
Reconciliation of operating income to net cash provided (used) by operating activities:		
Operating income (loss)	$ (26,063)	$ 10,868
Adjustments to reconcile operating income to net cash provided (used) by operating activities:		
Depreciation expense	98,677	92,762
(Increase) decrease in accounts receivable	8,902	10,835
(Increase) decrease in deferred outflows net pension charge	(48)	22,575
Increase (decrease) in accounts payable	30,784	(3,035)
Increase (decrease) in accrued payroll and benefits	2,539	2,053
Increase (decrease) in compensated absences	6,033	361
Increase (decrease) in land fill closure	10,000	20,000
Increase (decrease) in deferred inflows net pension charge	(989)	(23,905)
Total adjustments	155,898	121,646
Net cash provided (used) by operating activities	$ 129,835	$ 132,514

LINCOLN COUNTY, NEVADA
NONMAJOR SPECIAL REVENUE FUNDS
COMBINING BALANCE SHEET
JUNE 30, 2021
(With Comparative Totals for June 30, 2020)

	Pioche Town	Alamo Town	Panaca Town	Federal In Lieu Tax	Resource Development Authority
ASSETS					
Pooled cash and investments	$ 283,306	$ 97,635	$ 34,862	$ 1,802,637	$ 121,993
Interest receivable	276	103	27	3,669	-
Taxes receivable	793	1,455	69	-	-
Due from other governments	11,153	4,644	8,389	11,509	17,106
Due from others	-	-	-	-	-
Inventory	-	-	-	-	-
Prepaid expense	-	-	-	-	-
Interfund receivable	-	-	-	-	-
Total assets	$ 295,528	$ 103,837	$ 43,347	$ 1,817,815	$ 139,099
LIABILITIES					
Accounts payable	$ 1,352	$ 12,735	$ 1,862	$ 19,992	$ 17,373
Accrued payroll and benefits	-	314	205	-	-
Unearned revenue	-	-	-	-	121,726
Due to other funds	-	-	-	-	-
Total liabilities	1,352	13,049	2,067	19,992	139,099
DEFERRED INFLOWS OF RESOURCES					
Unavailable revenue - property taxes	742	1,279	-	-	-
FUND BALANCE					
Nonspendable	-	-	-	-	-
Restricted for:					
Unincorporated towns	293,434	89,509	41,280	-	-
Multi-species conservation	-	-	-	-	-
General government	-	-	-	-	-
Public safety	-	-	-	-	-
Judicial	-	-	-	-	-
Public works	-	-	-	-	-
Health	-	-	-	-	-
Welfare	-	-	-	-	-
Culture and recreation	-	-	-	-	-
Community support	-	-	-	-	-
Intergovernmental	-	-	-	-	-
Committed for:					
Land act	-	-	-	-	-
Water	-	-	-	-	-
Lincoln County Water District	-	-	-	-	-
General government	-	-	-	1,797,823	-
Public works	-	-	-	-	-
Health	-	-	-	-	-
Unassigned	-	-	-	-	-
Total fund balance	293,434	89,509	41,280	1,797,823	-
Total liabilities, deferred inflows of resources, and fund balance	$ 295,528	$ 103,837	$ 43,347	$ 1,817,815	$ 139,099

County Library	Museum	Senior Nutrition	Transportation	Agricultural Extension	Indigent	Medical Indigent
$ 55,593	$ 61,202	$ 202,906	$ 195,399	$ 27,404	$ 344,663	$ 526,558
-	-	-	-	-	-	557
499	131	858	-	167	602	1,344
7,750	-	18,610	13,867	-	-	-
-	-	-	-	-	-	-
-	-	-	-	-	-	-
-	-	-	-	-	-	-
-	-	-	-	-	-	-
$ 63,842	$ 61,333	$ 222,374	$ 209,266	$ 27,571	$ 345,265	$ 528,459
$ 1,568	$ 158	$ 14,189	$ 1,677	$ 1,847	$ 5,028	$ 12,600
3,947	2,156	7,595	5,010	665	4,106	-
-	-	-	-	-	-	-
-	-	-	-	-	-	-
5,515	2,314	21,784	6,687	2,512	9,134	12,600
422	118	719	-	141	602	1,128
-	-	-	-	-	-	-
-	-	-	-	-	-	-
-	-	-	-	-	-	-
-	-	-	-	-	-	-
-	-	-	-	-	-	-
-	-	-	-	-	-	-
-	-	-	-	-	-	-
-	-	199,871	-	-	335,529	514,731
57,905	58,901	-	-	-	-	-
-	-	-	202,579	24,918	-	-
-	-	-	-	-	-	-
-	-	-	-	-	-	-
-	-	-	-	-	-	-
-	-	-	-	-	-	-
-	-	-	-	-	-	-
-	-	-	-	-	-	-
-	-	-	-	-	-	-
57,905	58,901	199,871	202,579	24,918	335,529	514,731
$ 63,842	$ 61,333	$ 222,374	$ 209,266	$ 27,571	$ 345,265	$ 528,459

LINCOLN COUNTY, NEVADA
NONMAJOR SPECIAL REVENUE FUNDS
COMBINING BALANCE SHEET
JUNE 30, 2021
(With Comparative Totals for June 30, 2020)

	China Springs	Regional Streets and Highways	Room Tax	Legal Aid Services	Forensic Services
ASSETS					
Pooled cash and investments	$ 6,883	$ 755,779	$ 145,776	$ -	$ 4,407
Interest receivable	-	2,040	-	-	-
Taxes receivable	69	-	8,057	-	-
Due from other governments	2	25,057	-	-	-
Due from others	-	-	-	-	-
Inventory	-	-	-	-	-
Prepaid expense	-	-	-	-	-
Interfund receivable	-	-	-	-	-
Total assets	$ 6,954	$ 782,876	$ 153,833	$ -	$ 4,407
LIABILITIES					
Accounts payable	$ -	$ 150	$ 675	$ -	$ -
Accrued payroll and benefits	-	-	600	-	-
Unearned revenue	-	-	-	-	-
Due to other funds	-	-	-	1,739	-
Total liabilities	-	150	1,275	1,739	-
DEFERRED INFLOWS OF RESOURCES					
Unavailable revenue - property taxes	59	-	-	-	-
FUND BALANCE					
Nonspendable	-	-	-	-	-
Restricted for:					
Unincorporated towns	-	-	-	-	-
Multi-species conservation	-	-	-	-	-
General government	-	-	-	-	-
Public safety	-	-	-	-	4,407
Judicial	-	-	-	-	-
Public works	-	782,726	-	-	-
Health	-	-	-	-	-
Welfare	-	-	-	-	-
Culture and recreation	-	-	152,558	-	-
Community support	-	-	-	-	-
Intergovernmental	6,895	-	-	-	-
Committed for:					
Land act	-	-	-	-	-
Water	-	-	-	-	-
Lincoln County Water District	-	-	-	-	-
General government	-	-	-	-	-
Public works	-	-	-	-	-
Health	-	-	-	-	-
Unassigned	-	-	-	(1,739)	-
Total fund balance	6,895	782,726	152,558	(1,739)	4,407
Total liabilities, deferred inflows of resources, and fund balance	$ 6,954	$ 782,876	$ 153,833	$ -	$ 4,407

Administrative Assessment	Forfeiture	Recorder Technology	L. C. Housing Authority
$ 126,246	$ 60,233	$ 32,701	$ 32,034
123	62	28	28
-	-	-	-
-	-	-	-
-	-	-	240,608
-	-	-	-
-	-	-	-
-	-	-	-
$ 126,369	$ 60,295	$ 32,729	$ 272,670
$ 959	$ -	$ -	$ 206
-	-	-	84
-	-	-	-
-	-	-	-
959	-	-	290
-	-	-	-
-	-	-	-
-	-	-	-
-	-	-	-
-	-	32,729	-
-	60,295	-	-
125,410	-	-	-
-	-	-	-
-	-	-	-
-	-	-	-
-	-	-	-
-	-	-	272,380
-	-	-	-
-	-	-	-
-	-	-	-
-	-	-	-
-	-	-	-
-	-	-	-
-	-	-	-
125,410	60,295	32,729	272,380
$ 126,369	$ 60,295	$ 32,729	$ 272,670

LINCOLN COUNTY, NEVADA
NONMAJOR SPECIAL REVENUE FUNDS
COMBINING BALANCE SHEET
JUNE 30, 2021
(With Comparative Totals for June 30, 2020)

	Alamo Clinic	Fair Board	Multi-Species Habitat Conservation	Multi-Species Habitat Conservation Section 7	Youth Activities Counsel
ASSETS					
Pooled cash and investments	$ 153	$ 50,560	$ 10,390	$ 903,994	$ 6,007
Interest receivable	-	36	15	1,036	-
Taxes receivable	711	-	-	-	-
Due from other governments	-	-	-	-	-
Due from others	-	-	-	-	-
Inventory	-	-	-	-	-
Prepaid expense	-	-	-	-	-
Interfund receivable	-	-	-	-	-
Total assets	$ 864	$ 50,596	$ 10,405	$ 905,030	$ 6,007
LIABILITIES					
Accounts payable	$ 153	$ 7,020	$ 871	$ -	$ -
Accrued payroll and benefits	-	706	-	-	-
Unearned revenue	-	-	9,534	-	-
Due to other funds	-	-	-	-	-
Total liabilities	153	7,726	10,405	-	-
DEFERRED INFLOWS OF RESOURCES					
Unavailable revenue - property taxes	597	-	-	-	-
FUND BALANCE					
Nonspendable	-	-	-	-	-
Restricted for:					
Unincorporated towns	-	-	-	-	-
Multi-species conservation	-	-	-	905,030	-
General government	-	-	-	-	-
Public safety	-	-	-	-	-
Judicial	-	-	-	-	-
Public works	-	-	-	-	-
Health	114	-	-	-	-
Welfare	-	-	-	-	-
Culture and recreation	-	42,870	-	-	-
Community support	-	-	-	-	6,007
Intergovernmental	-	-	-	-	-
Committed for:					
Land act	-	-	-	-	-
Water	-	-	-	-	-
Lincoln County Water District	-	-	-	-	-
General government	-	-	-	-	-
Public works	-	-	-	-	-
Health	-	-	-	-	-
Unassigned	-	-	-	-	-
Total fund balance	114	42,870	-	905,030	6,007
Total liabilities, deferred inflows of resources, and fund balance	$ 864	$ 50,596	$ 10,405	$ 905,030	$ 6,007

Genetic Marker Testing	Public Improvement	Airport	Panaca Town Building	Court Facility Fees
$ 3,172	$ 149,380	$ 47,849	$ 69,878	$ 113,365
-	171	-	68	116
-	-	-	-	-
-	-	-	-	-
-	-	17	-	-
-	-	-	-	-
-	-	-	-	-
-	-	-	-	-
$ 3,172	$ 149,551	$ 47,866	$ 69,946	$ 113,481
$ 3,172	$ -	$ 906	$ -	$ -
-	-	30	-	-
-	-	-	-	-
-	-	-	-	-
3,172	-	936	-	-
-	-	-	-	-
-	-	-	-	-
-	-	-	-	-
-	-	-	-	-
-	-	-	-	-
-	-	-	-	113,481
-	149,551	-	-	-
-	-	-	-	-
-	-	-	-	-
-	-	-	-	-
-	-	-	-	-
-	-	-	-	-
-	-	-	-	-
-	-	-	-	-
-	-	-	69,946	-
-	-	46,930	-	-
-	-	-	-	-
-	-	-	-	-
-	149,551	46,930	69,946	113,481
$ 3,172	$ 149,551	$ 47,866	$ 69,946	$ 113,481

LINCOLN COUNTY, NEVADA
NONMAJOR SPECIAL REVENUE FUNDS
COMBINING BALANCE SHEET
JUNE 30, 2021
(With Comparative Totals for June 30, 2020)

	Lincoln County Land Act General	Lincoln County Land Act Planning and Development	Lincoln County Land Act Education	Lincoln County Water General	Lincoln County Water Special Projects
ASSETS					
Pooled cash and investments	$ 6,891	$ 701	$ 130,749	$ 634	$ 8,799
Interest receivable	8	1	150	1	10
Taxes receivable	-	-	-	-	-
Due from other governments	-	-	-	-	-
Due from others	-	-	-	-	-
Inventory	-	-	-	-	-
Prepaid expense	-	-	-	-	-
Interfund receivable	-	-	-	-	-
Total assets	$ 6,899	$ 702	$ 130,899	$ 635	$ 8,809
LIABILITIES					
Accounts payable	$ -	$ -	$ -	$ -	$ -
Accrued payroll and benefits	-	-	-	-	-
Unearned revenue	-	-	-	-	-
Due to other funds	-	-	-	-	-
Total liabilities	-	-	-	-	-
DEFERRED INFLOWS OF RESOURCES					
Unavailable revenue - property taxes	-	-	-	-	-
FUND BALANCE					
Nonspendable	-	-	-	-	-
Restricted for:					
Unincorporated towns	-	-	-	-	-
Multi-species conservation	-	-	-	-	-
General government	-	-	-	-	-
Public safety	-	-	-	-	-
Judicial	-	-	-	-	-
Public works	-	-	-	-	-
Health	-	-	-	-	-
Welfare	-	-	-	-	-
Culture and recreation	-	-	-	-	-
Community support	-	-	-	-	-
Intergovernmental	-	-	-	-	-
Committed for:					
Land act	6,899	702	130,899	-	-
Water	-	-	-	635	8,809
Lincoln County Water District	-	-	-	-	-
General government	-	-	-	-	-
Public works	-	-	-	-	-
Health	-	-	-	-	-
Unassigned	-	-	-	-	-
Total fund balance	6,899	702	130,899	635	8,809
Total liabilities, deferred inflows of resources, and fund balance	$ 6,899	$ 702	$ 130,899	$ 635	$ 8,809

Lincoln County Water Planning and Development	Lincoln County Water Special Use	Lincoln County Water Grant Match	Lincoln County Water District General	Lincoln County Water District Planning and Development
$ 87,283	$ 1,262,149	$ 87,217	$ 279,218	$ 939,790
100	1,432	100	996	3,630
-	-	-	-	-
-	-	-	-	-
-	-	-	-	-
-	-	-	-	-
-	-	-	1,549	-
-	150,000	-	-	-
$ 87,383	$ 1,413,581	$ 87,317	$ 281,763	$ 943,420
$ -	$ -	$ -	$ -	$ 9,105
-	-	-	6,552	-
-	-	-	-	-
-	-	-	-	-
-	-	-	6,552	9,105
-	-	-	-	-
-	-	-	1,549	-
-	-	-	-	-
-	-	-	-	-
-	-	-	-	-
-	-	-	-	-
-	-	-	-	-
-	-	-	-	-
-	-	-	-	-
-	-	-	-	-
-	-	-	-	-
-	-	-	-	-
87,383	1,413,581	87,317	-	-
-	-	-	273,662	934,315
-	-	-	-	-
-	-	-	-	-
-	-	-	-	-
-	-	-	-	-
87,383	1,413,581	87,317	275,211	934,315
$ 87,383	$ 1,413,581	$ 87,317	$ 281,763	$ 943,420

LINCOLN COUNTY, NEVADA
NONMAJOR SPECIAL REVENUE FUNDS
COMBINING BALANCE SHEET
JUNE 30, 2021
(With Comparative Totals for June 30, 2020)

	Lincoln County Water District Special Projects	Assessor Technology	District Court Technology	District Court Specialty Court	Court Security Fee
ASSETS					
Pooled cash and investments	$ 701,585	$ 45,069	$ 5,136	$ 4,235	$ 13,459
Interest receivable	2,624	-	-	-	15
Taxes receivable	-	-	-	-	-
Due from other governments	-	-	-	-	-
Due from others	-	-	-	-	-
Inventory	-	-	-	-	-
Prepaid expense	24,000	-	-	-	-
Interfund receivable	-	-	-	-	-
Total assets	$ 728,209	$ 45,069	$ 5,136	$ 4,235	$ 13,474
LIABILITIES					
Accounts payable	$ -	$ -	$ -	$ -	$ -
Accrued payroll and benefits	-	-	-	-	-
Unearned revenue	-	-	-	-	-
Due to other funds	-	-	-	-	-
Total liabilities	-	-	-	-	-
DEFERRED INFLOWS OF RESOURCES					
Unavailable revenue - property taxes	-	-	-	-	-
FUND BALANCE					
Nonspendable	24,000	-	-	-	-
Restricted for:					
Unincorporated towns	-	-	-	-	-
Multi-species conservation	-	-	-	-	-
General government	-	45,069	-	-	-
Public safety	-	-	-	-	-
Judicial	-	-	5,136	4,235	13,474
Public works	-	-	-	-	-
Health	-	-	-	-	-
Welfare	-	-	-	-	-
Culture and recreation	-	-	-	-	-
Community support	-	-	-	-	-
Intergovernmental	-	-	-	-	-
Committed for:					
Land act	-	-	-	-	-
Water	-	-	-	-	-
Lincoln County Water District	704,209	-	-	-	-
General government	-	-	-	-	-
Public works	-	-	-	-	-
Health	-	-	-	-	-
Unassigned	-	-	-	-	-
Total fund balance	728,209	45,069	5,136	4,235	13,474
Total liabilities, deferred inflows of resources, and fund balance	$ 728,209	$ 45,069	$ 5,136	$ 4,235	$ 13,474

District Court Enrichment	Demerit Point Reduction	Property Management	Totals 2021	Totals 2020
$ 63,553	$ 3,447	$ 79,642	$ 9,992,522	$ 9,999,453
67	2	-	17,491	23,904
-	-	-	14,755	19,685
-	-	-	118,087	82,464
-	-	-	240,625	20,128
-	-	-	-	8,091
-	-	-	25,549	33,554
-	-	-	150,000	170,000
$ 63,620	$ 3,449	$ 79,642	$ 10,559,029	$ 10,357,279
$ -	$ -	$ 5,373	$ 118,971	$ 237,795
-	-	345	32,315	33,405
-	-	-	131,260	95,830
-	-	-	1,739	3,195
-	-	5,718	284,285	370,225
-	-	-	5,807	10,663
-	-	-	25,549	41,645
-	-	-	424,223	347,694
-	-	-	905,030	903,800
-	-	-	77,798	71,619
-	-	-	64,702	51,290
63,620	3,449	-	328,805	286,906
-	-	-	932,277	931,040
-	-	-	114	167
-	-	-	1,050,131	889,039
-	-	-	312,234	267,951
-	-	-	505,884	258,275
-	-	-	6,895	3,597
-	-	-	138,500	138,312
-	-	-	1,597,725	1,595,730
-	-	-	1,912,186	1,968,594
-	-	73,924	1,941,693	2,166,944
-	-	-	46,930	23,382
-	-	-	-	33,571
-	-	-	(1,739)	(3,195)
63,620	3,449	73,924	10,268,937	9,976,361
$ 63,620	$ 3,449	$ 79,642	$ 10,559,029	$ 10,357,249

LINCOLN COUNTY, NEVADA
NONMAJOR SPECIAL REVENUE FUNDS
COMBINING SCHEDULE OF REVENUES, EXPENDITURES,
AND CHANGES IN FUND BALANCES
FOR THE YEAR ENDED JUNE 30, 2021
(With Comparative Totals for the Year Ended June 30, 2020)

	Pioche Town	Alamo Town	Panaca Town	Federal In Lieu Tax	Resource Development Authority
Revenues:					
Taxes	$ 59,649	$ 60,987	$ 13,697	$ -	$ -
Licenses and permits	5,310	-	-	-	-
Intergovernmental	60,640	25,221	45,564	980,517	50,930
Charges for services	-	-	-	-	-
Fines and forfeitures	-	-	-	-	-
Miscellaneous	4,361	4,224	1,553	2,831	4,387
Total revenues	129,960	90,432	60,814	983,348	55,317
Expenditures:					
General government	23,770	14,097	2,996	527,438	-
Public safety	-	-	-	-	-
Judicial	-	-	-	-	-
Public works	17,744	1,524	7,186	-	-
Health	3,345	-	11,343	-	-
Welfare	-	-	-	-	-
Culture and recreation	26,938	71,140	24,594	-	-
Community support	-	-	-	13,250	55,317
Intergovernmental	-	-	-	104,125	-
Debt service:					
Principal	-	-	-	-	-
Interest	-	-	-	-	-
Total expenditures	71,797	86,761	46,119	644,813	55,317
Excess (deficiency) of revenues over expenditures	58,163	3,671	14,695	338,535	-
Other financing sources (uses):					
Operating transfers in	-	-	-	-	-
Operating transfers out	-	-	-	(574,619)	-
Total other financing sources (uses)	-	-	-	(574,619)	-
Net change in fund balance before special items	58,163	3,671	14,695	(236,084)	-
Special items:					
Disposal of Ambulance	-	-	-	-	-
Disposal of Tri-County Weed Control	-	-	-	-	-
Total special items	-	-	-	-	-
Net change in fund balance	58,163	3,671	14,695	(236,084)	-
Fund balance:					
Beginning of year	235,271	85,838	26,585	2,033,907	-
End of year	$ 293,434	$ 89,509	$ 41,280	$ 1,797,823	$ -

County Library	Museum	Senior Nutrition	Transportation	Agricultural Extension	Indigent	Medical Indigent
$ 68,479	$ 11,506	$ 123,503	$ -	$ 23,989	$ 86,023	$ 191,911
-	-	-	-	-	-	-
61	10	178,085	101,397	21	77	171
-	-	16,706	3,888	-	-	-
-	-	-	-	-	-	-
13,069	2,297	1,540	-	-	21	44,032
81,609	13,813	319,834	105,285	24,010	86,121	236,114
-	-	-	-	-	-	-
-	-	-	-	-	-	-
-	-	-	-	-	-	-
-	-	-	-	-	-	-
-	-	-	-	-	-	-
-	-	253,107	-	-	98,585	159,624
88,694	38,960	-	-	-	-	-
-	-	-	142,090	24,772	-	-
-	-	-	-	-	-	-
-	-	-	-	-	-	-
-	-	-	-	-	-	-
88,694	38,960	253,107	142,090	24,772	98,585	159,624
(7,085)	(25,147)	66,727	(36,805)	(762)	(12,464)	76,490
-	-	32,339	35,000	-	-	-
-	-	-	-	-	(2,000)	-
-	-	32,339	35,000	-	(2,000)	-
(7,085)	(25,147)	99,066	(1,805)	(762)	(14,464)	76,490
-	-	-	-	-	-	-
-	-	-	-	-	-	-
-	-	-	-	-	-	-
(7,085)	(25,147)	99,066	(1,805)	(762)	(14,464)	76,490
64,990	84,048	100,805	204,384	25,680	349,993	438,241
$ 57,905	$ 58,901	$ 199,871	$ 202,579	$ 24,918	$ 335,529	$ 514,731

LINCOLN COUNTY, NEVADA
NONMAJOR SPECIAL REVENUE FUNDS
COMBINING SCHEDULE OF REVENUES, EXPENDITURES,
AND CHANGES IN FUND BALANCES
FOR THE YEAR ENDED JUNE 30, 2021
(With Comparative Totals for the Year Ended June 30, 2020)

	China Springs	Ambulance	Regional Streets and Highways	Room Tax
Revenues:				
Taxes	$ 10,075	$ -	$ -	$ 108,132
Licenses and permits	-	-	-	-
Intergovernmental	9	-	134,534	-
Charges for services	-	115,491	-	-
Fines and forfeitures	-	-	-	-
Miscellaneous	-	16	2,342	-
Total revenues	10,084	115,507	136,876	108,132
Expenditures:				
General government	-	-	-	-
Public safety	-	-	-	-
Judicial	-	-	-	-
Public works	-	-	107,275	-
Health	-	69,532	-	-
Welfare	-	-	-	-
Culture and recreation	-	-	-	43,158
Community support	-	-	-	-
Intergovernmental	16,786	-	-	7,608
Debt service:				
Principal	-	-	-	-
Interest	-	-	-	-
Total expenditures	16,786	69,532	107,275	50,766
Excess (deficiency) of revenues over expenditures	(6,702)	45,975	29,601	57,366
Other financing sources (uses):				
Operating transfers in	10,000	-	-	-
Operating transfers out	-	(5,000)	(28,567)	-
Total other financing sources (uses)	10,000	(5,000)	(28,567)	-
Net change in fund balance before special items	3,298	40,975	1,034	57,366
Special items:				
Disposal of Ambulance	-	(74,546)	-	-
Disposal of Tri-County Weed Control	-	-	-	-
Total special items	-	(74,546)	-	-
Net change in fund balance	3,298	(33,571)	1,034	57,366
Fund balance:				
Beginning of year	3,597	33,571	781,692	95,192
End of year	$ 6,895	$ -	$ 782,726	$ 152,558

Legal Aid Services	Forensic Services	Administrative Assessment	Forfeiture	Recorder Technology	L. C. Housing Authority	Alamo Clinic
$ -	$ -	$ -	$ -	$ -	$ -	$ 101,950
-	-	-	-	-	-	-
-	-	-	-	-	-	91
1,456	1,524	-	-	9,210	-	-
-	-	27,649	-	-	-	-
-	-	138	14,321	23	268,969	-
1,456	1,524	27,787	14,321	9,233	268,969	102,041
-	-	-	-	9,140	-	-
-	2,291	-	142	-	-	-
-	-	12,703	-	-	-	-
-	-	-	-	-	-	-
-	-	-	-	-	-	102,094
-	-	-	-	-	-	-
-	-	-	-	-	-	-
-	-	-	-	-	18,793	-
-	-	-	-	-	-	-
-	-	-	-	-	-	-
-	-	-	-	-	-	-
-	2,291	12,703	142	9,140	18,793	102,094
1,456	(767)	15,084	14,179	93	250,176	(53)
-	-	-	-	-	-	-
-	-	-	-	-	-	-
-	-	-	-	-	-	-
1,456	(767)	15,084	14,179	93	250,176	(53)
-	-	-	-	-	-	-
-	-	-	-	-	-	-
-	-	-	-	-	-	-
1,456	(767)	15,084	14,179	93	250,176	(53)
(3,195)	5,174	110,326	46,116	32,636	22,204	167
$ (1,739)	$ 4,407	$ 125,410	$ 60,295	$ 32,729	$ 272,380	$ 114

LINCOLN COUNTY, NEVADA
NONMAJOR SPECIAL REVENUE FUNDS
COMBINING SCHEDULE OF REVENUES, EXPENDITURES,
AND CHANGES IN FUND BALANCES
FOR THE YEAR ENDED JUNE 30, 2021
(With Comparative Totals for the Year Ended June 30, 2020)

	Fair Board	Multi-Species Habitat Conservation	Multi-Species Habitat Conservation Section 7	Youth Activities Counsel
Revenues:				
Taxes	$ -	$ -	$ -	$ -
Licenses and permits	-	-	-	-
Intergovernmental	-	3,706	-	-
Charges for services	-	-	-	-
Fines and forfeitures	-	-	-	-
Miscellaneous	73,482	15	1,230	-
Total revenues	73,482	3,721	1,230	-
Expenditures:				
General government	-	3,721	-	-
Public safety	-	-	-	-
Judicial	-	-	-	-
Public works	-	-	-	-
Health	-	-	-	-
Welfare	-	-	-	-
Culture and recreation	54,333	-	-	-
Community support	-	-	-	-
Intergovernmental	-	-	-	-
Debt service:				
Principal	-	-	-	-
Interest	-	-	-	-
Total expenditures	54,333	3,721	-	-
Excess (deficiency) of revenues over expenditures	19,149	-	1,230	-
Other financing sources (uses):				
Operating transfers in	-	-	-	-
Operating transfers out	-	-	-	-
Total other financing sources (uses)	-	-	-	-
Net change in fund balance before special items	19,149	-	1,230	-
Special items:				
Disposal of Ambulance	-	-	-	-
Disposal of Tri-County Weed Control	-	-	-	-
Total special items	-	-	-	-
Net change in fund balance	19,149	-	1,230	-
Fund balance:				
Beginning of year	23,721	-	903,800	6,007
End of year	$ 42,870	$ -	$ 905,030	$ 6,007

Genetic Marker Testing	Public Improvement	Airport	Panaca Town Building	Court Facility Fees	Lincoln County Land Act General
$ -	$ -	$ -	$ -	$ -	$ -
-	-	-	-	-	-
-	-	-	-	-	-
9,742	-	26,080	-	30,492	-
-	-	-	-	-	-
-	203	47,798	12,337	77	9
9,742	203	73,878	12,337	30,569	9
9,742	-	-	-	-	-
-	-	-	-	-	-
-	-	-	-	8,056	-
-	-	58,421	-	-	-
-	-	-	-	-	-
-	-	-	-	-	-
-	-	-	-	-	-
-	-	-	-	-	-
-	-	-	-	-	-
-	-	-	-	-	-
-	-	-	-	-	-
9,742	-	58,421	-	8,056	-
-	203	15,457	12,337	22,513	9
-	-	-	-	-	-
-	-	-	-	-	-
-	-	-	-	-	-
-	203	15,457	12,337	22,513	9
-	-	-	-	-	-
-	-	-	-	-	-
-	-	-	-	-	-
-	203	15,457	12,337	22,513	9
-	149,348	31,473	57,609	90,968	6,890
$ -	$ 149,551	$ 46,930	$ 69,946	$ 113,481	$ 6,899

LINCOLN COUNTY, NEVADA
NONMAJOR SPECIAL REVENUE FUNDS
COMBINING SCHEDULE OF REVENUES, EXPENDITURES,
AND CHANGES IN FUND BALANCE
FOR THE YEAR ENDED JUNE 30, 2021
(With Comparative Totals for the Year Ended June 30, 2020)

	Lincoln County Land Act Planning and Development	Lincoln County Land Act Education	Lincoln County Water General	Lincoln County Water Special Projects
Revenues:				
Taxes	$ -	$ -	$ -	$ -
Licenses and permits	-	-	-	-
Intergovernmental	-	-	-	-
Charges for services	-	-	-	-
Fines and forfeitures	-	-	-	-
Miscellaneous	1	178	1	12
Total revenues	1	178	1	12
Expenditures:				
General government	-	-	-	-
Public safety	-	-	-	-
Judicial	-	-	-	-
Public works	-	-	-	-
Health	-	-	-	-
Welfare	-	-	-	-
Culture and recreation	-	-	-	-
Community support	-	-	-	-
Intergovernmental	-	-	-	-
Debt service				
Principal	-	-	-	-
Interest	-	-	-	-
Total expenditures	-	-	-	-
Excess (deficiency) of revenues over expenditures	1	178	1	12
Other financing sources (uses):				
Operating transfers in	-	-	-	-
Operating transfers out	-	-	-	-
Total other financing sources (uses)	-	-	-	-
Net change in fund balance before special items	1	178	1	12
Special items:				
Disposal of Ambulance	-	-	-	-
Disposal of Tri-County Weed Control	-	-	-	-
Total special items	-	-	-	-
Net change in fund balance	1	178	1	12
Fund balance:				
Beginning of year	701	130,721	634	8,797
End of year	$ 702	$ 130,899	$ 635	$ 8,809

Lincoln County Water Planning and Development	Lincoln County Water Special Use	Lincoln County Water Grant Match	Lincoln County Water District General	Lincoln County Water District Planning and Development	Lincoln County Water District Special Projects
$ -	$ -	$ -	$ -	$ -	$ -
-	-	-	-	-	-
-	-	-	-	-	-
-	-	-	-	-	-
-	-	-	-	-	-
119	1,714	119	998	3,604	2,830
119	1,714	119	998	3,604	2,830
-	-	-	242,420	21,425	8,000
-	-	-	-	-	-
-	-	-	-	-	-
-	-	-	-	-	-
-	-	-	-	-	-
-	-	-	-	-	-
-	-	-	-	-	-
-	-	-	-	-	-
-	-	-	-	-	-
-	-	-	-	-	-
-	-	-	-	-	-
-	-	-	242,420	21,425	8,000
119	1,714	119	(241,422)	(17,821)	(5,170)
-	-	-	200,000	-	-
-	-	-	-	-	-
-	-	-	200,000	-	-
119	1,714	119	(41,422)	(17,821)	(5,170)
-	-	-	-	-	-
-	-	-	-	-	-
-	-	-	-	-	-
119	1,714	119	(41,422)	(17,821)	(5,170)
87,264	1,411,867	87,198	316,633	952,136	733,379
$ 87,383	$ 1,413,581	$ 87,317	$ 275,211	$ 934,315	$ 728,209

LINCOLN COUNTY, NEVADA
NONMAJOR SPECIAL REVENUE FUNDS
COMBINING SCHEDULE OF REVENUES, EXPENDITURES,
AND CHANGES IN FUND BALANCE
FOR THE YEAR ENDED JUNE 30, 2021
(With Comparative Totals for the Year Ended June 30, 2020)

	Assessor Technology	District Court Technology	District Court Specialty Court	Court Security Fee
Revenues:				
Taxes	$ -	$ -	$ -	$ -
Licenses and permits	-	-	-	-
Intergovernmental	-	-	-	-
Charges for services	11,713	16	13,896	1,000
Fines and forfeitures	-	-	-	-
Miscellaneous	-	-	160	18
Total revenues	11,713	16	14,056	1,018
Expenditures:				
General government	5,627	-	-	-
Public safety	-	-	-	-
Judicial	-	-	20,546	-
Public works	-	-	-	-
Health	-	-	-	-
Welfare	-	-	-	-
Culture and recreation	-	-	-	-
Community support	-	-	-	-
Intergovernmental	-	-	-	-
Debt service:				
Principal	-	-	-	-
Interest	-	-	-	-
Total expenditures	5,627	-	20,546	-
Excess (deficiency) of revenues over expenditures	6,086	16	(6,490)	1,018
Other financing sources (uses):				
Operating transfers in	-	-	2,000	-
Operating transfers out	-	-	-	-
Total other financing sources (uses)	-	-	2,000	-
Net change in fund balance before special items	6,086	16	(4,490)	1,018
Special items:				
Disposal of Ambulance	-	-	-	-
Disposal of Tri-County Weed Control	-	-	-	-
Total special items	-	-	-	-
Net change in fund balance	6,086	16	(4,490)	1,018
Fund balance:				
Beginning of year	38,983	5,120	8,725	12,456
End of year	$ 45,069	$ 5,136	$ 4,235	$ 13,474

District Court Enrichment	Demerit Point Reduction	Property Management	Totals 2021	2020
$ -	$ -	$ -	$ 859,901	$ 867,478
-	-	-	5,310	4,855
-	-	-	1,581,034	1,564,830
6,062	5,606	-	252,882	615,490
-	-	-	27,649	30,503
84	6	15,630	524,749	409,717
6,146	5,612	15,630	3,251,525	3,492,873
-	-	57,134	925,510	1,183,637
-	-	-	2,433	39,935
-	4,000	-	45,305	112,845
-	-	-	192,150	75,228
-	-	-	186,314	252,704
-	-	-	511,316	524,842
-	-	-	347,817	345,391
-	-	-	254,222	247,029
-	-	-	128,519	119,144
-	-	-	-	24,157
-	-	-	-	1,784
-	4,000	57,134	2,593,586	2,926,696
6,146	1,612	(41,504)	657,939	566,177
-	-	40,000	319,339	343,308
-	-	-	(610,186)	(332,294)
-	-	40,000	(290,847)	11,014
6,146	1,612	(1,504)	367,092	577,191
-	-	-	(74,546)	-
-	-	-	-	(313,853)
-	-	-	(74,546)	(313,853)
6,146	1,612	(1,504)	292,546	263,338
57,474	1,837	75,428	9,976,391	9,713,053
$ 63,620	$ 3,449	$ 73,924	$ 10,268,937	$ 9,976,391

LINCOLN COUNTY, NEVADA
NONMAJOR PIOCHE TOWN SPECIAL REVENUE FUND (018)
COMPARATIVE BALANCE SHEETS
JUNE 30, 2021 AND 2020

	2021	2020
ASSETS		
Pooled cash and investments	$ 283,306	$ 230,074
Interest receivable	276	354
Taxes receivable	793	1,493
Due from other governments	11,153	10,714
Total assets	$ 295,528	$ 242,635
LIABILITIES		
Accounts payable	$ 1,352	$ 2,969
Accrued payroll and benefits	-	2,902
Total liabilities	1,352	5,871
DEFERRED INFLOWS OF RESOURCES		
Unavailable revenue - property taxes	742	1,493
FUND BALANCE		
Restricted	293,434	235,271
Total liabilities, deferred inflows of resources, and fund balance	$ 295,528	$ 242,635

LINCOLN COUNTY, NEVADA
NONMAJOR PIOCHE TOWN SPECIAL REVENUE FUND (018)
SCHEDULE OF REVENUES, EXPENDITURES, AND CHANGES
IN FUND BALANCE - BUDGET (GAAP BASIS) AND ACTUAL
FOR THE YEAR ENDED JUNE 30, 2021

(With Comparative Actual Amounts for the Year Ended June 30, 2020)

	2021 Budget	2021 Actual	Variance - Positive (Negative)	2020 Actual
Revenues:				
Taxes:				
Property taxes	$ 59,761	$ 59,649	$ (112)	$ 57,478
Licenses and permits:				
Gaming licenses	2,500	3,060	560	2,955
Liquor licenses	1,300	2,250	950	1,900
Total licenses and permits	3,800	5,310	1,510	4,855
Intergovernmental:				
Consolidated tax	59,108	60,640	1,532	58,178
Miscellaneous:				
Investment income	-	363	363	5,793
Other	5,870	-	(5,870)	-
Rent	-	3,998	3,998	4,892
Total miscellaneous	5,870	4,361	(1,509)	10,685
Total revenues	128,539	129,960	1,421	131,196
Expenditures:				
Current:				
General government:				
Other general expenses:				
Employee benefits	857	818	39	916
Services and supplies	24,415	22,952	1,463	8,280
Total general government	25,272	23,770	1,502	9,196
Public works:				
Highways and streets:				
Salaries and wages	3,088	4,775	(1,687)	5,384
Employee benefits	3,885	2,052	1,833	2,309
Services and supplies	11,234	10,917	317	12,088
Total public works	18,207	17,744	463	19,781
Health:				
Cemetery:				
Salaries and wages	2,326	2,269	57	3,364
Employee benefits	1,833	765	1,068	1,252
Services and supplies	2,872	311	2,561	1,873
Total health	$ 7,031	$ 3,345	$ 3,686	$ 6,489

LINCOLN COUNTY, NEVADA
NONMAJOR PIOCHE TOWN SPECIAL REVENUE FUND (018) (Continued)
SCHEDULE OF REVENUES, EXPENDITURES, AND CHANGES
IN FUND BALANCE - BUDGET (GAAP BASIS) AND ACTUAL
FOR THE YEAR ENDED JUNE 30, 2021

(With Comparative Actual Amounts for the Year Ended June 30, 2020)

	2021 Budget	2021 Actual	Variance - Positive (Negative)	2020 Actual
Expenditures: (Continued)				
Culture and recreation:				
Parks:				
Salaries and wages	$ 11,819	$ 9,843	$ 1,976	$ 7,763
Employee benefits	4,988	2,789	2,199	2,768
Services and supplies	14,903	4,466	10,437	14,854
Total parks	31,710	17,098	14,612	25,385
Swimming pool:				
Salaries and wages	2,490	4,331	(1,841)	4,651
Employee benefits	2,223	712	1,511	989
Services and supplies	6,552	3,361	3,191	5,966
Total swimming pool	11,265	8,404	2,861	11,606
Town hall:				
Salaries and wages	219	104	115	1,387
Employee benefits	662	20	642	630
Services and supplies	2,718	1,312	1,406	1,410
Total town hall	3,599	1,436	2,163	3,427
Total culture and recreation	46,574	26,938	19,636	40,418
Contingency	2,913	-	2,913	-
Total expenditures	99,997	71,797	28,200	75,884
Excess (deficiency) of revenues over expenditures	28,542	58,163	29,621	55,312
Other financing sources (uses):				
Operating transfers out	(2,075)	-	2,075	-
Net change in fund balance	26,467	58,163	31,696	55,312
Fund balance:				
Beginning of year	138,187	235,271	97,084	179,959
End of year	$ 164,654	$ 293,434	$ 128,780	$ 235,271

LINCOLN COUNTY, NEVADA
NONMAJOR ALAMO TOWN SPECIAL REVENUE FUND (016)
COMPARATIVE BALANCE SHEETS
JUNE 30, 2021 AND 2020

	2021	2020
ASSETS		
Pooled cash and investments	$ 97,635	$ 87,821
Interest receivable	103	153
Taxes receivable	1,455	1,128
Due from other governments	4,644	4,449
Total assets	$ 103,837	$ 93,551
LIABILITIES		
Accounts payable	$ 12,735	$ 6,365
Accrued payroll and benefits	314	347
Total liabilities	13,049	6,712
DEFERRED INFLOWS OF RESOURCES		
Unavailable revenue - property taxes	1,279	1,001
FUND BALANCE		
Restricted	89,509	85,838
Total liabilities, deferred inflows of resources, and fund balance	$ 103,837	$ 93,551

LINCOLN COUNTY, NEVADA
NONMAJOR ALAMO TOWN SPECIAL REVENUE FUND (016)
SCHEDULE OF REVENUES, EXPENDITURES, AND CHANGES IN FUND BALANCE - BUDGET (GAAP BASIS) AND ACTUAL
FOR THE YEAR ENDED JUNE 30, 2021
(With Comparative Actual Amounts for the Year Ended June 30, 2020)

	2021 Budget	2021 Actual	Variance - Positive (Negative)	2020 Actual
Revenues:				
Taxes:				
Property taxes	$ 59,501	$ 60,987	$ 1,486	$ 57,102
Intergovernmental:				
Consolidated tax	24,567	25,221	654	24,178
Miscellaneous:				
Investment income	50	114	64	2,496
Other	4,000	4,110	110	5,297
Total miscellaneous	4,050	4,224	174	7,793
Total revenues	88,118	90,432	2,314	89,073
Expenditures:				
Current:				
General government:				
Salaries and wages	15,636	11,100	4,536	12,645
Employee benefits	5,752	634	5,118	792
Services and supplies	5,150	2,363	2,787	4,950
Total general government	26,538	14,097	12,441	18,387
Public works:				
Highways and streets:				
Services and supplies	3,100	1,524	1,576	5,939
Culture and recreation:				
P.V. senior center:				
Services and supplies	6,703	4,647	2,056	4,310
Parks:				
Services and supplies	88,297	66,493	21,804	52,802
Total culture and recreation	95,000	71,140	23,860	57,112
Total expenditures	$ 124,638	$ 86,761	$ 37,877	$ 81,438

LINCOLN COUNTY, NEVADA
NONMAJOR ALAMO TOWN SPECIAL REVENUE FUND (016) (Continued)
SCHEDULE OF REVENUES, EXPENDITURES, AND CHANGES
IN FUND BALANCE - BUDGET (GAAP BASIS) AND ACTUAL
FOR THE YEAR ENDED JUNE 30, 2021
(With Comparative Actual Amounts for the Year Ended June 30, 2020)

	2021 Budget	2021 Actual	Variance - Positive (Negative)	2020 Actual
Excess (deficiency) of revenues over expenditures	$ (36,520)	$ 3,671	$ 40,191	$ 7,635
Fund balance:				
Beginning of year	68,979	85,838	16,859	78,203
End of year	$ 32,459	$ 89,509	$ 57,050	$ 85,838

LINCOLN COUNTY, NEVADA
NONMAJOR PANACA TOWN SPECIAL REVENUE FUND (017)
COMPARATIVE BALANCE SHEETS
JUNE 30, 2021 AND 2020

	2021	2020
ASSETS		
Pooled cash and investments	$ 34,862	$ 21,212
Interest receivable	27	35
Taxes receivable	69	394
Due from other governments	8,389	8,050
Total assets	$ 43,347	$ 29,691
LIABILITIES		
Accounts payable	$ 1,862	$ 2,608
Accrued payroll and benefits	205	123
Total liabilities	2,067	2,731
DEFERRED INFLOWS OF RESOURCES		
Unavailable revenue - property taxes	-	375
FUND BALANCE		
Restricted	41,280	26,585
Total liabilities, deferred inflows of resources, and fund balance	$ 43,347	$ 29,691

LINCOLN COUNTY, NEVADA
NONMAJOR PANACA TOWN SPECIAL REVENUE FUND (017)
SCHEDULE OF REVENUES, EXPENDITURES, AND CHANGES
IN FUND BALANCE - BUDGET (GAAP BASIS) AND ACTUAL
FOR THE YEAR ENDED JUNE 30, 2021

(With Comparative Actual Amounts for the Year Ended June 30, 2020)

	2021 Budget	2021 Actual	Variance - Positive (Negative)	2020 Actual
Revenues:				
Taxes:				
Property taxes	$ 13,436	$ 13,697	$ 261	$ 12,858
Intergovernmental:				
Consolidated tax	44,405	45,564	1,159	43,697
Miscellaneous:				
Investment income	-	35	35	573
Rent	750	1,474	724	150
Other	-	44	44	49
Total miscellaneous	750	1,553	803	772
Total revenues	58,591	60,814	2,223	57,327
Expenditures:				
Current:				
General government:				
Salaries and wages	-	-	-	45
Employee benefits	500	528	(28)	432
Services and supplies	2,900	2,468	432	2,325
Total general government	3,400	2,996	404	2,802
Public works:				
Highways and streets:				
Services and supplies	10,000	7,186	2,814	17,312
Health:				
Cemetery:				
Salaries and wages	9,600	9,600	-	9,600
Employee benefits	1,110	1,024	86	1,012
Services and supplies	1,100	719	381	582
Total health	$ 11,810	$ 11,343	$ 467	$ 11,194

LINCOLN COUNTY, NEVADA
NONMAJOR PANACA TOWN SPECIAL REVENUE FUND (017) (Continued)
SCHEDULE OF REVENUES, EXPENDITURES, AND CHANGES
IN FUND BALANCE - BUDGET (GAAP BASIS) AND ACTUAL
FOR THE YEAR ENDED JUNE 30, 2021

(With Comparative Actual Amounts for the Year Ended June 30, 2020)

	2021 Budget	2021 Actual	Variance - Positive (Negative)	2020 Actual
Expenditures (continued):				
Current:				
Culture and recreation:				
Parks:				
Services and supplies	$ 12,800	$ 10,148	$ 2,652	$ 10,872
Town hall:				
Salaries and wages	2,500	2,400	100	2,400
Employee benefits	277	184	93	184
Services and supplies	15,000	11,862	3,138	7,835
Sesquicentennial celebration:				
Services and supplies	250	-	250	-
Total culture and recreation	30,827	24,594	6,233	21,291
Total expenditures	56,037	46,119	9,918	52,599
Excess (deficiency) of revenues over expenditures	2,554	14,695	12,141	4,728
Fund balance:				
Beginning of year	26,536	26,585	49	21,857
End of year	$ 29,090	$ 41,280	$ 12,190	$ 26,585

LINCOLN COUNTY, NEVADA
NONMAJOR FUND - FEDERAL IN LIEU TAX SPECIAL REVENUE FUND (012)
COMPARATIVE BALANCE SHEETS
JUNE 30, 2021 AND 2020

	2021	2020
ASSETS		
Pooled cash and investments	$ 1,802,637	$ 2,044,054
Interest receivable	3,669	6,699
Due from other governments	11,509	10,309
Total assets	$ 1,817,815	$ 2,061,062
LIABILITIES		
Accounts payable	$ 19,992	$ 27,155
FUND BALANCE		
Committed	1,797,823	2,033,907
Total liabilities and fund balance	$ 1,817,815	$ 2,061,062

LINCOLN COUNTY, NEVADA
NONMAJOR FUND - FEDERAL IN LIEU TAX SPECIAL REVENUE FUND (012)
SCHEDULE OF REVENUES, EXPENDITURES, AND CHANGES
IN FUND BALANCE - BUDGET (GAAP BASIS) AND ACTUAL
FOR THE YEAR ENDED JUNE 30, 2021
(With Comparative Actual Amounts for the Year Ended June 30, 2020)

	2021 Budget	2021 Actual	Variance - Positive (Negative)	2020 Actual
Revenues:				
Intergovernmental:				
Federal in lieu tax	$ 932,088	$ 980,517	$ 48,429	$ 974,644
Grants	-	-	-	-
Total intergovernmental	932,088	980,517	48,429	974,644
Miscellaneous:				
Investment income	5,000	2,831	(2,169)	55,752
Total revenues	937,088	983,348	46,260	1,030,396
Expenditures:				
Current:				
General government:				
Service and supplies	971,573	489,869	481,704	619,695
Capital outlay	51,500	37,569	13,931	79,948
Total general government	1,023,073	527,438	495,635	699,643
Public safety:				
Service and supplies	65,704	-	65,704	99
Capital outlay	15,650	-	15,650	-
Total public safety	81,354	-	81,354	99
Public works:				
Service and supplies	20,000	-	20,000	-
Community support:				
Service and supplies	27,602	13,250	14,352	6,720
Capital outlay	-	-	-	10,000
Total community support	27,602	13,250	14,352	16,720
Intergovernmental:				
Service and supplies	120,000	104,125	15,875	95,771
Debt service:				
Principal	-	-	-	24,157
Interest	-	-	-	1,784
Total debt service	-	-	-	25,941
Total expenditures	$ 1,272,029	$ 644,813	$ 627,216	$ 838,174

LINCOLN COUNTY, NEVADA
NONMAJOR FUND - FEDERAL IN LIEU TAX SPECIAL REVENUE FUND (012) (Continued)
SCHEDULE OF REVENUES, EXPENDITURES, AND CHANGES
IN FUND BALANCE - BUDGET (GAAP BASIS) AND ACTUAL
FOR THE YEAR ENDED JUNE 30, 2021
(With Comparative Actual Amounts for the Year Ended June 30, 2020)

	2021		Variance - Positive	2020
	Budget	Actual	(Negative)	Actual
Excess (deficiency) of revenues over expenditures	$ (334,941)	$ 338,535	$ 673,476	$ 192,222
Other financing sources (uses):				
Operating transfers out	(545,000)	(574,619)	(29,619)	(287,143)
Net change in fund balance	(879,941)	(236,084)	643,857	(94,921)
Fund balance:				
Beginning of year	1,338,073	2,033,907	695,834	2,128,828
End of year	$ 458,132	$ 1,797,823	$ 1,339,691	$ 2,033,907

LINCOLN COUNTY, NEVADA
NONMAJOR RESOURCE DEVELOPMENT AUTHORITY SPECIAL REVENUE FUND (008)
COMPARATIVE BALANCE SHEETS
JUNE 30, 2021 AND 2020

	2021	2020
ASSETS		
Pooled cash and investments	$ 121,993	$ 85,249
Due from other governments	17,106	-
Total assets	$ 139,099	$ 85,249
LIABILITIES		
Accounts payable	$ 17,373	$ 2,659
Unearned revenue	121,726	82,590
Total liabilities	139,099	85,249
FUND BALANCE		
Nonspendable	-	-
Total liabilities and fund balance	$ 139,099	$ 85,249

LINCOLN COUNTY, NEVADA
NONMAJOR RESOURCE DEVELOPMENT AUTHORITY SPECIAL REVENUE FUND (008)
SCHEDULE OF REVENUES, EXPENDITURES, AND CHANGES
IN FUND BALANCE - BUDGET (GAAP BASIS) AND ACTUAL
FOR THE YEAR ENDED JUNE 30, 2021
(With Comparative Actual Amounts for the Year Ended June 30, 2020)

	2021 Budget	2021 Actual	Variance - Positive (Negative)	2020 Actual
Revenues:				
Intergovernmental:				
Grants	$ 155,549	$ 50,930	$ (104,619)	$ 67,169
Miscellaneous:				
Other	28,957	4,387	(24,570)	-
Donations	-	-	-	1,000
Total miscellaneous	28,957	4,387	(24,570)	1,000
Total revenues	184,506	55,317	(129,189)	68,169
Expenditures:				
Current:				
Community support:				
Services and supplies	90,000	55,317	34,683	63,782
Capital outlay	-	-	-	4,387
Total expenditures	90,000	55,317	34,683	68,169
Excess (deficiency) of revenues over expenditures	94,506	-	(94,506)	-
Fund balance:				
Beginning of year	-	-	-	-
End of year	$ 94,506	$ -	$ (94,506)	$ -

LINCOLN COUNTY, NEVADA
NONMAJOR COUNTY LIBRARY SPECIAL REVENUE FUND (006)
COMPARATIVE BALANCE SHEETS
JUNE 30, 2021 AND 2020

	2021	2020
ASSETS		
Pooled cash and investments	$ 55,593	$ 69,766
Taxes receivable	499	1,298
Due from governments	7,750	-
Total assets	$ 63,842	$ 71,064
LIABILITIES		
Accounts payable	$ 1,568	$ 1,277
Accrued payroll and benefits	3,947	3,665
Total liabilities	5,515	4,942
DEFERRED INFLOWS OF RESOURCES		
Unavailable revenue - property taxes	422	1,132
FUND BALANCE		
Restricted	57,905	64,990
Total liabilities, deferred inflows of resources, and fund balance	$ 63,842	$ 71,064

LINCOLN COUNTY, NEVADA
NONMAJOR COUNTY LIBRARY SPECIAL REVENUE FUND (006)
SCHEDULE OF REVENUES, EXPENDITURES, AND CHANGES IN FUND BALANCE - BUDGET (GAAP BASIS) AND ACTUAL
FOR THE YEAR ENDED JUNE 30, 2021
(With Comparative Actual Amounts for the Year Ended June 30, 2020)

	2021 Budget	2021 Actual	Variance - Positive (Negative)	2020 Actual
Revenues:				
Taxes:				
Property taxes	$ 68,104	$ 68,479	$ 375	$ 97,898
Intergovernmental:				
Fish and wildlife	-	61	61	93
Miscellaneous:				
Other	-	5,319	5,319	160
Donations	-	7,750	7,750	-
Total miscellaneous	-	13,069	13,069	160
Total revenues	68,104	81,609	13,505	98,151
Expenditures:				
Current:				
Culture and recreation:				
Libraries:				
Salaries and wages	47,000	47,816	(816)	46,100
Employee benefits	22,640	21,267	1,373	21,597
Services and supplies	30,034	19,611	10,423	24,416
Total expenditures	99,674	88,694	10,980	92,113
Excess (deficiency) of revenues over expenditures	(31,570)	(7,085)	24,485	6,038
Fund balance:				
Beginning of year	36,453	64,990	28,537	58,952
End of year	$ 4,883	$ 57,905	$ 53,022	$ 64,990

LINCOLN COUNTY, NEVADA
NONMAJOR MUSEUM SPECIAL REVENUE FUND (003)
COMPARATIVE BALANCE SHEETS
JUNE 30, 2021 AND 2020

	2021	2020
ASSETS		
Pooled cash and investments	$ 61,202	$ 86,180
Taxes receivable	131	659
Total assets	$ 61,333	$ 86,839
LIABILITIES		
Accounts payable	$ 158	$ 785
Accrued payroll and benefits	2,156	1,431
Total liabilities	2,314	2,216
DEFERRED INFLOWS OF RESOURCES		
Unavailable revenue - property taxes	118	575
FUND BALANCE		
Restricted	58,901	84,048
Total liabilities, deferred inflows of resources, and fund balance	$ 61,333	$ 86,839

LINCOLN COUNTY, NEVADA
NONMAJOR MUSEUM SPECIAL REVENUE FUND (003)
SCHEDULE OF REVENUES, EXPENDITURES, AND CHANGES
IN FUND BALANCE - BUDGET (GAAP BASIS) AND ACTUAL
FOR THE YEAR ENDED JUNE 30, 2021
(With Comparative Actual Amounts for the Year Ended June 30, 2020)

	2021 Budget	2021 Actual	Variance - Positive (Negative)	2020 Actual
Revenues:				
Taxes:				
Property taxes	$ 11,086	$ 11,506	$ 420	$ 49,903
Intergovernmental:				
Fish and wildlife	-	10	10	47
Miscellaneous:				
Donations	-	2,297	2,297	3,297
Total revenues	11,086	13,813	2,727	53,247
Expenditures:				
Current:				
Culture and recreation:				
Museum:				
Salaries and wages	30,758	20,865	9,893	26,050
Employee benefits	16,963	13,016	3,947	4,507
Services and supplies	13,000	5,079	7,921	6,534
Total expenditures	60,721	38,960	21,761	37,091
Net change in fund balance	(49,635)	(25,147)	24,488	16,156
Fund balance:				
Beginning of year	54,206	84,048	29,842	67,892
End of year	$ 4,571	$ 58,901	$ 54,330	$ 84,048

LINCOLN COUNTY, NEVADA
NONMAJOR SENIOR NUTRITION SPECIAL REVENUE FUND (037)
COMPARATIVE BALANCE SHEETS
JUNE 30, 2021 AND 2020

	2021	2020
ASSETS		
Pooled cash and investments	$ 202,906	$ 101,505
Taxes receivable	858	1,596
Due from other governments	18,610	15,257
Total assets	$ 222,374	$ 118,358
LIABILITIES		
Accounts payable	$ 14,189	$ 9,828
Accrued payroll and benefits	7,595	6,331
Total liabilities	21,784	16,159
DEFERRED INFLOWS OF RESOURCES		
Unavailable revenue - property taxes	719	1,394
FUND BALANCE		
Restricted	199,871	100,805
Total liabilities, deferred inflows of resources, and fund balance	$ 222,374	$ 118,358

LINCOLN COUNTY, NEVADA
NONMAJOR SENIOR NUTRITION SPECIAL REVENUE FUND (037)
SCHEDULE OF REVENUES, EXPENDITURES, AND CHANGES
IN FUND BALANCE - BUDGET (GAAP BASIS) AND ACTUAL
FOR THE YEAR ENDED JUNE 30, 2021
(With Comparative Actual Amounts for the Year Ended June 30, 2020)

	2021		Variance - Positive	2020
	Budget	Actual	(Negative)	Actual
Revenues:				
Taxes:				
Property taxes	$ 123,096	$ 123,503	$ 407	$ 119,868
Intergovernmental:				
Grants	130,000	177,975	47,975	138,107
Fish and wildlife	115	110	(5)	113
Total intergovernmental	130,115	178,085	47,970	138,220
Charges for services:				
Sales - meals	25,000	16,706	(8,294)	21,891
Miscellaneous:				
Other	2,000	340	(1,660)	-
Donations	-	1,200	1,200	2,375
Total miscellaneous	2,000	1,540	(460)	2,375
Total revenues	280,211	319,834	39,623	282,354
Expenditures:				
Current:				
Welfare:				
Salaries and wages	78,111	73,602	4,509	71,785
Employee benefits	36,344	35,485	859	36,633
Services and supplies	193,500	144,020	49,480	162,927
Total expenditures	307,955	253,107	54,848	271,345
Excess (deficiency) of revenues over expenditures	(27,744)	66,727	94,471	11,009
Other financing sources (uses):				
Operating transfers in	14,000	32,339	18,339	33,308
Net change in fund balance	(13,744)	99,066	112,810	44,317
Fund balance:				
Beginning of year	45,649	100,805	55,156	56,488
End of year	$ 31,905	$ 199,871	$ 167,966	$ 100,805

LINCOLN COUNTY, NEVADA
NONMAJOR TRANSPORTATION SPECIAL REVENUE FUND (011)
COMPARATIVE BALANCE SHEETS
JUNE 30, 2021 AND 2020

	2021	2020
ASSETS		
Pooled cash and investments	$ 195,399	$ 200,082
Due from other governments	13,867	9,825
Total assets	$ 209,266	$ 209,907
LIABILITIES		
Accounts payable	$ 1,677	$ 956
Accrued payroll and benefits	5,010	4,567
Total liabilities	6,687	5,523
FUND BALANCE		
Restricted	202,579	204,384
Total liabilities and fund balance	$ 209,266	$ 209,907

LINCOLN COUNTY, NEVADA
NONMAJOR TRANSPORTATION SPECIAL REVENUE FUND (011)
SCHEDULE OF REVENUES, EXPENDITURES, AND CHANGES
IN FUND BALANCE - BUDGET (GAAP BASIS) AND ACTUAL
FOR THE YEAR ENDED JUNE 30, 2021
(With Comparative Actual Amounts for the Year Ended June 30, 2020)

	2021 Budget	2021 Actual	Variance - Positive (Negative)	2020 Actual
Revenues:				
Intergovernmental:				
Grants	$ 70,000	$ 101,397	$ 31,397	$ 94,589
Charges for services:				
Reimbursement	35,000	-	(35,000)	-
Bus fares	5,800	3,888	(1,912)	3,091
Total charges or services	40,800	3,888	(36,912)	3,091
Total revenues	110,800	105,285	(5,515)	97,680
Expenditures:				
Current:				
Community support:				
Salaries and wages	51,078	52,665	(1,587)	49,106
Employee benefits	30,907	34,652	(3,745)	28,429
Services and supplies	46,700	54,773	(8,073)	26,369
Capital outlay	35,000	-	35,000	-
Total expenditures	163,685	142,090	21,595	103,904
Excess (deficiency) of revenues over expenditures	(52,885)	(36,805)	16,080	(6,224)
Other financing sources (uses):				
Operating transfers in	35,000	35,000	-	35,000
Net change in fund balance	(17,885)	(1,805)	16,080	28,776
Fund balance:				
Beginning of year	152,816	204,384	51,568	175,608
End of year	$ 134,931	$ 202,579	$ 67,648	$ 204,384

LINCOLN COUNTY, NEVADA
NONMAJOR AGRICULTURAL EXTENSION SPECIAL REVENUE FUND (005)
COMPARATIVE BALANCE SHEETS
JUNE 30, 2021 AND 2020

	2021	2020
ASSETS		
Pooled cash and investments	$ 27,404	$ 28,053
Taxes receivable	167	311
Total assets	$ 27,571	$ 28,364
LIABILITIES		
Accounts payable	$ 1,847	$ 1,810
Accrued payroll and benefits	665	602
Total liabilities	2,512	2,412
DEFERRED INFLOWS OF RESOURCES		
Unavailable revenue - property taxes	141	272
FUND BALANCE		
Restricted	24,918	25,680
Total liabilities, deferred inflows of resources, and fund balance	$ 27,571	$ 28,364

LINCOLN COUNTY, NEVADA
NONMAJOR AGRICULTURAL EXTENSION SPECIAL REVENUE FUND (005)
SCHEDULE OF REVENUES, EXPENDITURES, AND CHANGES
IN FUND BALANCE - BUDGET (GAAP BASIS) AND ACTUAL
FOR THE YEAR ENDED JUNE 30, 2021
(With Comparative Actual Amounts for the Year Ended June 30, 2020)

	2021 Budget	2021 Actual	Variance - Positive (Negative)	2020 Actual
Revenues:				
Taxes:				
Property taxes	$ 23,914	$ 23,989	$ 75	$ 23,285
Intergovernmental:				
Fish and wildlife	-	21	21	22
Miscellaneous:				
Other	5,460	-	(5,460)	-
Total revenues	29,374	24,010	(5,364)	23,307
Expenditures:				
Current:				
Community support:				
Salaries and wages	13,913	13,507	406	13,507
Employee benefits	1,608	1,602	6	1,616
Services and supplies	29,785	9,663	20,122	9,932
Total expenditures	45,306	24,772	20,534	25,055
Excess (deficiency) of revenues over expenditures	(15,932)	(762)	15,170	(1,748)
Fund balance:				
Beginning of year	15,932	25,680	9,748	27,428
End of year	$ -	$ 24,918	$ 24,918	$ 25,680

LINCOLN COUNTY, NEVADA
NONMAJOR INDIGENT SPECIAL REVENUE FUND (010)
COMPARATIVE BALANCE SHEETS
JUNE 30, 2021 AND 2020

	2021	2020
ASSETS		
Pooled cash and investments	$ 344,663	$ 364,791
Taxes receivable	602	1,117
Total assets	$ 345,265	$ 365,908
LIABILITIES		
Accounts payable	$ 5,028	$ 11,442
Accrued payroll and benefits	4,106	3,496
Total liabilities	9,134	14,938
DEFERRED INFLOWS OF RESOURCES		
Unavailable revenue - property taxes	602	977
FUND BALANCE		
Restricted	335,529	349,993
Total liabilities, deferred inflows of resources, and fund balance	$ 345,265	$ 365,908

LINCOLN COUNTY, NEVADA
NONMAJOR INDIGENT SPECIAL REVENUE FUND (010)
SCHEDULE OF REVENUES, EXPENDITURES, AND CHANGES IN FUND BALANCE - BUDGET (GAAP BASIS) AND ACTUAL
FOR THE YEAR ENDED JUNE 30, 2021
(With Comparative Actual Amounts for the Year Ended June 30, 2020)

	2021 Budget	2021 Actual	Variance - Positive (Negative)	2020 Actual
Revenues:				
Taxes:				
Property taxes	$ 85,853	$ 86,023	$ 170	$ 83,592
Intergovernmental:				
Fish and wildlife	-	77	77	78
Miscellaneous:				
Other	-	21	21	-
Total revenues	85,853	86,121	268	83,670
Expenditures:				
Current:				
Welfare:				
Salaries and wages	51,149	49,362	1,787	47,378
Employee benefits	18,867	20,578	(1,711)	19,505
Service and supplies	284,000	22,979	261,021	18,927
Jail:				
Service and supplies	25,000	5,666	19,334	7,989
Total expenditures	379,016	98,585	280,431	93,799
Excess (deficiency) of revenues over expenditures	(293,163)	(12,464)	280,699	(10,129)
Other financing sources (uses):				
Operating transfers out	-	(2,000)	(2,000)	-
Net change in fund balance	(293,163)	(14,464)	278,699	(10,129)
Fund balance:				
Beginning of year	297,231	349,993	52,762	360,122
End of year	$ 4,068	$ 335,529	$ 331,461	$ 349,993

LINCOLN COUNTY, NEVADA
NONMAJOR MEDICAL INDIGENT SPECIAL REVENUE FUND (038)
COMPARATIVE BALANCE SHEETS
JUNE 30, 2021 AND 2020

	2021	2020
ASSETS		
Pooled cash and investments	$ 526,558	$ 517,096
Interest receivable	557	817
Taxes receivable	1,344	2,491
Total assets	$ 528,459	$ 520,404
LIABILITIES		
Accounts payable	$ 12,600	$ 79,986
DEFERRED INFLOWS OF RESOURCES		
Unavailable revenue - property taxes	1,128	2,177
FUND BALANCE		
Restricted	514,731	438,241
Total liabilities, deferred inflows of resources, and fund balance	$ 528,459	$ 520,404

LINCOLN COUNTY, NEVADA
NONMAJOR MEDICAL INDIGENT SPECIAL REVENUE FUND (038)
SCHEDULE OF REVENUES, EXPENDITURES, AND CHANGES
IN FUND BALANCE - BUDGET (GAAP BASIS) AND ACTUAL
FOR THE YEAR ENDED JUNE 30, 2021
(With Comparative Actual Amounts for the Year Ended June 30, 2020)

	2021		Variance - Positive	2020
	Budget	Actual	(Negative)	Actual
Revenues:				
Taxes:				
Property taxes	$ 191,318	$ 191,911	$ 593	$ 186,277
Intergovernmental:				
Fish and wildlife	-	171	171	175
Miscellaneous:				
Investment income	300	630	330	13,367
Other	-	43,402	43,402	-
Total miscellaneous	300	44,032	43,732	13,367
Total revenues	191,618	236,114	44,496	199,819
Expenditures:				
Current:				
Welfare:				
Service and supplies	580,900	159,624	421,276	159,698
Excess (deficiency) of revenues over expenditures	(389,282)	76,490	465,772	40,121
Fund balance:				
Beginning of year	389,282	438,241	48,959	398,120
End of year	$ -	$ 514,731	$ 514,731	$ 438,241

LINCOLN COUNTY, NEVADA
NONMAJOR CHINA SPRINGS SPECIAL REVENUE FUND (061)
COMPARATIVE BALANCE SHEETS
JUNE 30, 2021 AND 2020

	2021	2020
ASSETS		
Pooled cash and investments	$ 6,883	$ 3,579
Taxes receivable	69	131
Due from other governments	2	-
Total assets	$ 6,954	$ 3,710
LIABILITIES		
Accounts payable	$ -	$ -
DEFERRED INFLOWS OF RESOURCES		
Unavailable revenue - property taxes	59	113
FUND BALANCE		
Restricted	6,895	3,597
Total liabilities, deferred inflows of resources, and fund balance	$ 6,954	$ 3,710

LINCOLN COUNTY, NEVADA
NONMAJOR CHINA SPRINGS SPECIAL REVENUE FUND (061)
SCHEDULE OF REVENUES, EXPENDITURES, AND CHANGES
IN FUND BALANCE - BUDGET (GAAP BASIS) AND ACTUAL
FOR THE YEAR ENDED JUNE 30, 2021
(With Comparative Actual Amounts for the Year Ended June 30, 2020)

	2021		Variance - Positive	2020
	Budget	Actual	(Negative)	Actual
Revenues:				
Taxes:				
Property taxes	$ 10,045	$ 10,075	$ 30	$ 9,779
Intergovernmental:				
Fish and wildlife	-	9	9	9
Total revenues	10,045	10,084	39	9,788
Expenditures:				
Current:				
Intergovernmental:				
Services and supplies	19,553	16,786	2,767	17,645
Excess (deficiency) of revenues over expenditures	(9,508)	(6,702)	2,806	(7,857)
Other financing sources (uses):				
Operating transfers in	10,000	10,000	-	10,000
Net change in fund balance	492	3,298	2,806	2,143
Fund balance:				
Beginning of year	1,922	3,597	1,675	1,454
End of year	$ 2,414	$ 6,895	$ 4,481	$ 3,597

LINCOLN COUNTY, NEVADA
NONMAJOR AMBULANCE SPECIAL REVENUE FUND (046)
COMPARATIVE BALANCE SHEETS
JUNE 30, 2021 AND 2020

	2021	2020
ASSETS		
Pooled cash and investments	$ -	$ 29,170
Interest receivable	-	56
Due from others	-	10,230
Total assets	$ -	$ 39,456
LIABILITIES		
Accounts payable	$ -	$ 3,672
Accrued payroll and benefits	-	2,213
Total liabilities	-	5,885
FUND BALANCE		
Committed	-	33,571
Total liabilities and fund balance	$ -	$ 39,456

LINCOLN COUNTY, NEVADA
NONMAJOR AMBULANCE SPECIAL REVENUE FUND (046)
SCHEDULE OF REVENUES, EXPENDITURES, AND CHANGES IN FUND BALANCE - BUDGET (GAAP BASIS) AND ACTUAL
FOR THE YEAR ENDED JUNE 30, 2021
(With Comparative Actual Amounts for the Year Ended June 30, 2020)

	2021 Budget	2021 Actual	Variance - Positive (Negative)	2020 Actual
Revenues:				
Intergovernmental:				
Grant	$ -	$ -	$ -	$ 5,231
Mutual aid agreement	-	-	-	5,000
Total intergovernmental	-	-	-	10,231
Charges for services:				
Ambulance fees	110,000	115,491	5,491	134,391
Miscellaneous:				
Investment income	-	16	16	921
Total revenues	110,000	115,507	5,507	145,543
Expenditures:				
Current:				
Health:				
Salaries and wages	37,000	25,405	11,595	49,115
Employee benefits	7,626	4,231	3,395	7,990
Services and supplies	51,900	39,896	12,004	69,208
Capital outlay	-	-	-	9,327
Total expenditures	96,526	69,532	26,994	135,640
Excess (deficiency) of revenues over expenditures	13,474	45,975	32,501	9,903
Other financing sources (uses):				
Operating transfers out	(5,000)	(5,000)	-	-
Net change in fund balance before special items	8,474	40,975	32,501	9,903
Special items:				
Disposal	-	(74,546)	(74,546)	-
Net change in fund balance	8,474	(33,571)	(42,045)	9,903
Fund balance:				
Beginning of year	12,668	33,571	20,903	23,668
End of year	$ 21,142	$ -	$ (21,142)	$ 33,571

LINCOLN COUNTY, NEVADA
NONMAJOR REGIONAL TRANSPORTATION COMMISSION SPECIAL REVENUE FUND (050)
COMPARATIVE BALANCE SHEETS
JUNE 30, 2021 AND 2020

	2021	2020
ASSETS		
Pooled cash and investments	$ 755,779	$ 755,110
Interest receivable	2,040	2,957
Due from other governments	25,057	23,860
Total assets	$ 782,876	$ 781,927
LIABILITIES		
Accounts payable	$ 150	$ 235
FUND BALANCE		
Restricted	782,726	781,692
Total liabilities and fund balance	$ 782,876	$ 781,927

LINCOLN COUNTY, NEVADA
NONMAJOR REGIONAL TRANSPORTATION COMMISSION SPECIAL REVENUE FUND (050)
SCHEDULE OF REVENUES, EXPENDITURES, AND CHANGES
IN FUND BALANCE - BUDGET (GAAP BASIS) AND ACTUAL
FOR THE YEAR ENDED JUNE 30, 2021
(With Comparative Actual Amounts for the Year Ended June 30, 2020)

	2021 Budget	2021 Actual	Variance - Positive (Negative)	2020 Actual
Revenues:				
Intergovernmental:				
Optional $0.04 gas tax	$ 126,601	$ 134,534	$ 7,933	$ 123,268
Miscellaneous:				
Investment income	2,000	2,342	342	25,044
Total revenues	128,601	136,876	8,275	148,312
Expenditures:				
Current:				
Public works:				
Employee benefits	-	-	-	130
Services and supplies	700,000	107,275	592,725	1,764
Total expenditures	700,000	107,275	592,725	1,894
Excess (deficiency) of revenues over expenditures	(571,399)	29,601	601,000	146,418
Other financing sources (uses):				
Operating transfers out	-	(28,567)	(28,567)	(35,000)
Net change in fund balance	(571,399)	1,034	572,433	111,418
Fund balance:				
Beginning of year	602,495	781,692	179,197	670,274
End of year	$ 31,096	$ 782,726	$ 751,630	$ 781,692

LINCOLN COUNTY, NEVADA
NONMAJOR ROOM TAX SPECIAL REVENUE FUND (051)
COMPARATIVE BALANCE SHEETS
JUNE 30, 2021 AND 2020

	2021	2020
ASSETS		
Pooled cash and investments	$ 145,776	$ 98,711
Taxes receivable	8,057	7,746
Total assets	$ 153,833	$ 106,457
LIABILITIES		
Accounts payable	$ 675	$ 10,895
Accrued payroll and benefits	600	370
Total liabilities	1,275	11,265
FUND BALANCE		
Restricted	152,558	95,192
Total liabilities and fund balance	$ 153,833	$ 106,457

LINCOLN COUNTY, NEVADA
NONMAJOR ROOM TAX SPECIAL REVENUE FUND (051)
SCHEDULE OF REVENUES, EXPENDITURES AND CHANGES
IN FUND BALANCE - BUDGET (GAAP BASIS) AND ACTUAL
FOR THE YEAR ENDED JUNE 30, 2021
(With Comparative Actual Amounts for the Year Ended June 30, 2020)

	2021 Budget	2021 Actual	Variance - Positive (Negative)	2020 Actual
Revenues:				
Taxes:				
Room tax	$ 65,000	$ 108,132	$ 43,132	$ 70,479
Expenditures:				
Current:				
Culture and recreation:				
Salaries and wages	3,360	6,160	(2,800)	3,360
Employee benefits	388	786	(398)	681
Services and supplies	78,400	36,212	42,188	53,502
Total culture and recreation	82,148	43,158	38,990	57,543
Intergovernmental:				
Services and supplies	7,000	7,608	(608)	5,728
Total expenditures	89,148	50,766	38,382	63,271
Excess (deficiency) of revenues over expenditures	(24,148)	57,366	81,514	7,208
Other financing sources (uses):				
Operating transfers out	(10,000)	-	(10,000)	(10,000)
Net change in fund balance	(34,148)	57,366	91,514	(2,792)
Fund balance:				
Beginning of year	87,984	95,192	7,208	97,984
End of year	$ 53,836	$ 152,558	$ 98,722	$ 95,192

LINCOLN COUNTY, NEVADA
NONMAJOR LEGAL AID SERVICES SPECIAL REVENUE FUND (039)
COMPARATIVE BALANCE SHEETS
JUNE 30, 2021 AND 2020

	2021	2020
ASSETS		
Pooled cash and investments	$ -	$ -
LIABILITIES		
Due to other funds	$ 1,739	$ 3,195
FUND BALANCE		
Unassigned	(1,739)	(3,195)
Total liabilities and fund balance	$ -	$ -

LINCOLN COUNTY, NEVADA
NONMAJOR LEGAL AID SERVICES SPECIAL REVENUE FUND (039)
SCHEDULE OF REVENUES, EXPENDITURES, AND CHANGES
IN FUND BALANCE - BUDGET (GAAP BASIS) AND ACTUAL
FOR THE YEAR ENDED JUNE 30, 2021
(With Comparative Actual Amounts for the Year Ended June 30, 2020)

	2021 Budget	2021 Actual	Variance - Positive (Negative)	2020 Actual
Revenues:				
Charges for services:				
Other	$ 2,000	$ 1,456	$ (544)	$ 1,652
Expenditures:				
Current:				
Judicial:				
Services and supplies	3,807	-	3,807	4,654
Excess (deficiency) of revenues over expenditures	(1,807)	1,456	3,263	(3,002)
Fund balance:				
Beginning of year	1,807	(3,195)	(5,002)	(193)
End of year	$ -	$ (1,739)	$ (1,739)	$ (3,195)

LINCOLN COUNTY, NEVADA
NONMAJOR FORENSIC SERVICES SPECIAL REVENUE FUND (053)
COMPARATIVE BALANCE SHEETS
JUNE 30, 2021 AND 2020

	2021	2020
ASSETS		
Pooled cash and investments	$ 4,407	$ 5,751
LIABILITIES		
Accounts payable	$ -	$ 577
FUND BALANCE		
Restricted	4,407	5,174
Total liabilities and fund balance	$ 4,407	$ 5,751

LINCOLN COUNTY, NEVADA
NONMAJOR FORENSIC SERVICES SPECIAL REVENUE FUND (053)
SCHEDULE OF REVENUES, EXPENDITURES, AND CHANGES
IN FUND BALANCE - BUDGET (GAAP BASIS) AND ACTUAL
FOR THE YEAR ENDED JUNE 30, 2021
(With Comparative Actual Amounts for the Year Ended June 30, 2020)

	2021 Budget	2021 Actual	Variance - Positive (Negative)	2020 Actual
Revenues:				
Charges for services:				
Other	$ 2,500	$ 1,524	$ (976)	$ 1,977
Expenditures:				
Current:				
Public safety:				
Service and supplies	9,500	2,291	7,209	5,306
Excess (deficiency) of revenues over expenditures	(7,000)	(767)	6,233	(3,329)
Fund balance:				
Beginning of year	8,003	5,174	(2,829)	8,503
End of year	$ 1,003	$ 4,407	$ 3,404	$ 5,174

LINCOLN COUNTY, NEVADA
NONMAJOR ADMINISTRATIVE ASSESSMENT SPECIAL REVENUE FUND (059)
COMPARATIVE BALANCE SHEETS
JUNE 30, 2021 AND 2020

	2021	2020
ASSETS		
Pooled cash and investments	$ 126,246	$ 111,115
Interest receivable	123	183
Total assets	$ 126,369	$ 111,298
LIABILITIES		
Accounts payable	$ 959	$ 972
FUND BALANCE		
Restricted	125,410	110,326
Total liabilities and fund balance	$ 126,369	$ 111,298

LINCOLN COUNTY, NEVADA
NONMAJOR ADMINISTRATIVE ASSESSMENT SPECIAL REVENUE FUND (059)
SCHEDULE OF REVENUES, EXPENDITURES, AND CHANGES
IN FUND BALANCE - BUDGET (GAAP BASIS) AND ACTUAL
FOR THE YEAR ENDED JUNE 30, 2021
(With Comparative Actual Amounts for the Year Ended June 30, 2020)

	2021 Budget	2021 Actual	Variance - Positive (Negative)	2020 Actual
Revenues:				
Fines and forfeitures:				
Administrative assessments	$ 34,000	$ 27,649	$ (6,351)	$ 30,503
Miscellaneous:				
Investment income	-	138	138	2,971
Total revenues	34,000	27,787	(6,213)	33,474
Expenditures:				
Current:				
Judicial:				
Services and supplies	175,117	12,703	162,414	34,265
Excess (deficiency) of revenues over expenditures	(141,117)	15,084	156,201	(791)
Fund balance:				
Beginning of year	141,117	110,326	(30,791)	111,117
End of year	$ -	$ 125,410	$ 125,410	$ 110,326

LINCOLN COUNTY, NEVADA
NONMAJOR FORFEITURE SPECIAL REVENUE FUND (071)
COMPARATIVE BALANCE SHEETS
JUNE 30, 2021 AND 2020

	2021	2020
ASSETS		
Pooled cash and investments	$ 60,233	$ 48,619
Interest receivable	62	65
Total assets	$ 60,295	$ 48,684
LIABILITIES		
Accounts payable	$ -	$ 2,568
FUND BALANCE		
Restricted	60,295	46,116
Total liabilities and fund balance	$ 60,295	$ 48,684

LINCOLN COUNTY, NEVADA
NONMAJOR FORFEITURE SPECIAL REVENUE FUND (071)
SCHEDULE OF REVENUES, EXPENDITURES, AND CHANGES IN FUND BALANCE - BUDGET (GAAP BASIS) AND ACTUAL
FOR THE YEAR ENDED JUNE 30, 2021
(With Comparative Actual Amounts for the Year Ended June 30, 2020)

	2021 Budget	2021 Actual	Variance-Positive (Negative)	2020 Actual
Revenues:				
Intergovernmental:				
Grant	$ -	$ -	$ -	$ 27,052
Fines and forfeitures:				
Other	30,000	-	(30,000)	-
Miscellaneous:				
Investment income	-	96	96	1,062
Donation	-	5,716	5,716	-
Other	-	8,509	8,509	1,197
Total miscellaneous	-	14,321	14,321	2,259
Total revenues	30,000	14,321	(15,679)	29,311
Expenditures:				
Current:				
Public safety:				
Services and supplies	45,000	142	44,858	34,530
Excess (deficiency) of revenues over expenditures	(15,000)	14,179	29,179	(5,219)
Fund balance:				
Beginning of year	45,000	46,116	1,116	51,335
End of year	$ 30,000	$ 60,295	$ 30,295	$ 46,116

LINCOLN COUNTY, NEVADA
NONMAJOR RECORDER TECHNOLOGY SPECIAL REVENUE FUND (007)
COMPARATIVE BALANCE SHEETS
JUNE 30, 2021 AND 2020

	2021	2020
ASSETS		
Pooled cash and investments	$ 32,701	$ 32,586
Interest receivable	28	50
Total assets	$ 32,729	$ 32,636
LIABILITIES		
Accounts payable	$ -	$ -
FUND BALANCE		
Restricted	32,729	32,636
Total liabilities and fund balance	$ 32,729	$ 32,636

LINCOLN COUNTY, NEVADA
NONMAJOR RECORDER TECHNOLOGY SPECIAL REVENUE FUND (007)
SCHEDULE OF REVENUES, EXPENDITURES, AND CHANGES
IN FUND BALANCE - BUDGET (GAAP BASIS) AND ACTUAL
FOR THE YEAR ENDED JUNE 30, 2021
(With Comparative Actual Amounts for the Year Ended June 30, 2020)

	2021 Budget	2021 Actual	Variance-Positive (Negative)	2020 Actual
Revenues:				
Charges for services:				
User fees	$ 6,000	$ 9,210	$ 3,210	$ 8,325
Miscellaneous:				
Investment income	-	23	23	821
Total revenues	6,000	9,233	3,233	9,146
Expenditures:				
Current:				
General government:				
Services and supplies	30,000	-	30,000	-
Capital outlay	-	9,140	(9,140)	-
Total expenditures	30,000	9,140	20,860	-
Excess (deficiency) of revenues over expenditures	(24,000)	93	24,093	9,146
Fund balance:				
Beginning of year	24,490	32,636	8,146	23,490
End of year	$ 490	$ 32,729	$ 32,239	$ 32,636

LINCOLN COUNTY, NEVADA
NONMAJOR L.C. HOUSING AUTHORITY SPECIAL REVENUE FUND (073)
COMPARATIVE BALANCE SHEETS
JUNE 30, 2021 AND 2020

	2021	2020
ASSETS		
Pooled cash and investments	$ 32,034	$ 23,371
Interest receivable	28	36
Due from others	240,608	-
Total assets	$ 272,670	$ 23,407
LIABILITIES		
Accounts payable	$ 206	$ 1,055
Accrued payroll and benefits	84	148
Total liabilities	290	1,203
FUND BALANCE		
Restricted	272,380	22,204
Total liabilities and fund balance	$ 272,670	$ 23,407

LINCOLN COUNTY, NEVADA
NONMAJOR L.C. HOUSING AUTHORITY SPECIAL REVENUE FUND (073)
SCHEDULE OF REVENUES, EXPENDITURES, AND CHANGES
IN FUND BALANCE - BUDGET (GAAP BASIS) AND ACTUAL
FOR THE YEAR ENDED JUNE 30, 2021
(With Comparative Actual Amounts for the Year Ended June 30, 2020)

	2021 Budget	2021 Actual	Variance - Positive (Negative)	2020 Actual
Revenues:				
Miscellaneous:				
Rent	$ 35,000	$ 28,324	$ (6,676)	$ 34,982
Insurance settlement		240,608	240,608	-
Investment income	-	37	37	589
Total revenues	35,000	268,969	233,969	35,571
Expenditures:				
Current:				
Community support:				
Salaries and wages	18,745	8,880	9,865	21,209
Employee benefits	1,957	2,811	(854)	2,563
Services and supplies	14,309	7,102	7,207	9,409
Capital outlay	10,000	-	10,000	-
Total expenditures	45,011	18,793	26,218	33,181
Excess (deficiency) of revenues over expenditures	(10,011)	250,176	260,187	2,390
Fund balance:				
Beginning of year	10,011	22,204	12,193	19,814
End of year	$ -	$ 272,380	$ 272,380	$ 22,204

LINCOLN COUNTY, NEVADA
NONMAJOR ALAMO CLINIC SPECIAL REVENUE FUND (070)
COMPARATIVE BALANCE SHEETS
JUNE 30, 2021 AND 2020

	2021	2020
ASSETS		
Pooled cash and investments	$ 153	$ 378
Taxes receivable	711	1,321
Total assets	$ 864	$ 1,699
LIABILITIES		
Accounts payable	$ 153	$ 378
DEFERRED INFLOWS OF RESOURCES		
Unavailable revenue - property taxes	597	1,154
FUND BALANCE		
Restricted	114	167
Total liabilities, deferred inflows of resources, and fund balance	$ 864	$ 1,699

LINCOLN COUNTY, NEVADA
NONMAJOR ALAMO CLINIC SPECIAL REVENUE FUND (070)
SCHEDULE OF REVENUES, EXPENDITURES, AND CHANGES IN FUND BALANCE -BUDGET (GAAP BASIS) AND ACTUAL
FOR THE YEAR ENDED JUNE 30, 2021
(With Comparative Actual Amounts for the Year Ended June 30, 2020)

	2021 Budget	2021 Actual	Variance - Positive (Negative)	2020 Actual
Revenues:				
Taxes:				
Property taxes	$ 101,638	$ 101,950	$ 312	$ 98,959
Intergovernmental:				
Fish and wildlife	-	91	91	93
Total revenues	101,638	102,041	403	99,052
Expenditures:				
Current:				
Health:				
Services and supplies	101,638	102,094	(456)	99,381
Excess (deficiency) of revenues over expenditures	-	(53)	(53)	(329)
Fund balance:				
Beginning of year	496	167	(329)	496
End of year	$ 496	$ 114	$ (382)	$ 167

LINCOLN COUNTY, NEVADA
NONMAJOR FAIR BOARD SPECIAL REVENUE FUND (044)
COMPARATIVE BALANCE SHEETS
JUNE 30, 2021 AND 2020

	2021	2020
ASSETS		
Pooled cash and investments	$ 50,560	$ 24,186
Interest receivable	36	23
Total assets	$ 50,596	$ 24,209
LIABILITIES		
Accounts payable	$ 7,020	$ 488
Accrued payroll and benefits	706	-
Total liabilities	7,726	488
FUND BALANCE		
Restricted	42,870	23,721
Total liabilities and fund balance	$ 50,596	$ 24,209

LINCOLN COUNTY, NEVADA
NONMAJOR FAIR BOARD SPECIAL REVENUE FUND (044)
SCHEDULE OF REVENUES, EXPENDITURES, AND CHANGES IN FUND BALANCE - BUDGET (GAAP BASIS) AND ACTUAL
FOR THE YEAR ENDED JUNE 30, 2021
(With Comparative Actual Amounts for the Year Ended June 30, 2020)

	2021 Budget	2021 Actual	Variance - Positive (Negative)	2020 Actual
Revenues:				
Miscellaneous:				
Investment income	$ -	$ 71	$ 71	$ 380
Fees	63,116	69,721	6,605	29,571
Donations	-	3,690	3,690	3,795
Total revenues	63,116	73,482	10,366	33,746
Expenditures:				
Current:				
Culture and recreation:				
Parks:				
Salaries and wages	-	3,920	(3,920)	-
Employee benefits	-	644	(644)	-
Services and supplies	59,200	49,769	9,431	39,823
Total expenditures	59,200	54,333	4,867	39,823
Excess (deficiency) of revenues over expenditures	3,916	19,149	15,233	(6,077)
Other financing sources (uses):				
Operating transfers in	10,000	-	(10,000)	10,000
Net change in fund balance	13,916	19,149	5,233	3,923
Fund balance:				
Beginning of year	9,680	23,721	14,041	19,798
End of year	$ 23,596	$ 42,870	$ 19,274	$ 23,721

LINCOLN COUNTY, NEVADA
NONMAJOR MULTI-SPECIES HABITAT CONSERVATION SPECIAL REVENUE FUND (014)
COMPARATIVE BALANCE SHEETS
JUNE 30, 2021 AND 2020

	2021	2020
ASSETS		
Pooled cash and investments	$ 10,390	$ 13,837
Interest receivable	15	24
Total assets	$ 10,405	$ 13,861
LIABILITIES		
Accounts payable	$ 871	$ 621
Unearned revenue	9,534	13,240
Total liabilities	10,405	13,861
FUND BALANCE		
Restricted	-	-
Total liabilities and fund balance	$ 10,405	$ 13,861

LINCOLN COUNTY, NEVADA
NONMAJOR MULTI-SPECIES HABITAT CONSERVATION SPECIAL REVENUE FUND (014)
SCHEDULE OF REVENUES, EXPENDITURES, AND CHANGES
IN FUND BALANCE - BUDGET (GAAP BASIS) AND ACTUAL
FOR THE YEAR ENDED JUNE 30, 2021
(With Comparative Actual Amounts for the Year Ended June 30, 2020)

	2021 Budget	2021 Actual	Variance - Positive (Negative)	2020 Actual
Revenues:				
Intergovernmental:				
Grants	$ 18,090	$ 3,706	$ (14,384)	$ 3,087
Miscellaneous:				
Investment income	-	15	15	393
Total revenues	18,090	3,721	(14,369)	3,480
Expenditures:				
Current:				
General government:				
Services and supplies	15,290	3,721	11,569	3,480
Capital outlay	2,800	-	2,800	-
Total expenditures	18,090	3,721	14,369	3,480
Excess (deficiency) of revenues over expenditures	-	-	-	-
Fund balance:				
Beginning of year	-	-	-	-
End of year	$ -	$ -	$ -	$ -

LINCOLN COUNTY, NEVADA
NONMAJOR MULTI-SPECIES HABITAT CONSERVATION SEC. 7 SPECIAL REVENUE FUND (077)
COMPARATIVE BALANCE SHEETS
JUNE 30, 2021 AND 2020

	2021	2020
ASSETS		
Pooled cash and investments	$ 903,994	$ 902,339
Interest receivable	1,036	1,461
Total assets	$ 905,030	$ 903,800
LIABILITIES		
Accounts payable	$ -	$ -
FUND BALANCE		
Restricted	905,030	903,800
Total liabilities and fund balance	$ 905,030	$ 903,800

LINCOLN COUNTY, NEVADA
NONMAJOR MULTI-SPECIES HABITAT CONSERVATION SEC. 7 SPECIAL REVENUE FUND (077)
SCHEDULE OF REVENUES, EXPENDITURES, AND CHANGES
IN FUND BALANCE - BUDGET (GAAP BASIS) AND ACTUAL
FOR THE YEAR ENDED JUNE 30, 2021
(With Comparative Actual Amounts for the Year Ended June 30, 2020)

	2021 Budget	2021 Actual	Variance - Positive (Negative)	2020 Actual
Revenues:				
Miscellaneous:				
Investment income	$ 5,000	$ 1,230	$ (3,770)	$ 23,892
Expenditures:				
Current:				
General government:				
Services and supplies	889,908	-	889,908	-
Excess (deficiency) of revenues over expenditures	(884,908)	1,230	886,138	23,892
Fund balance:				
Beginning of year	884,908	903,800	18,892	879,908
End of year	$ -	$ 905,030	$ 905,030	$ 903,800

LINCOLN COUNTY, NEVADA
NONMAJOR YOUTH ACTIVITIES COUNSEL SPECIAL REVENUE FUND (072)
COMPARATIVE BALANCE SHEETS
JUNE 30, 2021 AND 2020

	2021	2020
ASSETS		
Pooled cash and investments	$ 6,007	$ 6,007
LIABILITIES		
Accrued payroll and benefits	$ -	$ -
FUND BALANCE		
Restricted	6,007	6,007
Total liabilities and fund balance	$ 6,007	$ 6,007

LINCOLN COUNTY, NEVADA
NONMAJOR YOUTH ACTIVITIES COUNSEL SPECIAL REVENUE FUND (072)
SCHEDULE OF REVENUES, EXPENDITURES, AND CHANGES
IN FUND BALANCE - BUDGET (GAAP BASIS) AND ACTUAL
FOR THE YEAR ENDED JUNE 30, 2021
(With Comparative Actual Amounts for the Year Ended June 30, 2020)

	2021		Variance - Positive	2020
	Budget	Actual	(Negative)	Actual
Revenues:				
Miscellaneous	$ -	$ -	$ -	$ -
Expenditures:				
Current:				
Community support:				
Services and supplies	6,007	-	6,007	-
Excess (deficiency) of revenues over expenditures	(6,007)	-	6,007	-
Fund balance:				
Beginning of year	6,007	6,007	-	6,007
End of year	$ -	$ 6,007	$ 6,007	$ 6,007

LINCOLN COUNTY, NEVADA
NONMAJOR GENETIC MARKER TESTING SPECIAL REVENUE FUND (024)
COMPARATIVE BALANCE SHEETS
JUNE 30, 2021 AND 2020

	2021	2020
ASSETS		
Pooled cash and investments	$ 3,172	$ 1,370
LIABILITIES		
Accounts payable	$ 3,172	$ 1,370
FUND BALANCE		
Restricted	-	-
Total liabilities and fund balance	$ 3,172	$ 1,370

LINCOLN COUNTY, NEVADA
NONMAJOR GENETIC MARKER TESTING SPECIAL REVENUE FUND (024)
SCHEDULE OF REVENUES, EXPENDITURES, AND CHANGES
IN FUND BALANCE - BUDGET (GAAP BASIS) AND ACTUAL
FOR THE YEAR ENDED JUNE 30, 2021
(With Comparative Actual Amounts for the Year Ended June 30, 2020)

	2021 Budget	2021 Actual	Variance - Positive (Negative)	2020 Actual
Revenues:				
Charges for services:				
Other	$ 12,000	$ 9,742	$ (2,258)	$ 10,372
Expenditures:				
Current:				
General government:				
Services and supplies	12,000	9,742	2,258	10,372
Excess (deficiency) of revenues over expenditures	-	-	-	-
Fund balance:				
Beginning of year	-	-	-	-
End of year	$ -	$ -	$ -	$ -

LINCOLN COUNTY, NEVADA
NONMAJOR PUBLIC IMPROVEMENT SPECIAL REVENUE FUND (105)
COMPARATIVE BALANCE SHEETS
JUNE 30, 2021 AND 2020

	2021	2020
ASSETS		
Pooled cash and investments	$ 149,380	$ 149,107
Interest receivable	171	241
Total assets	$ 149,551	$ 149,348
LIABILITIES		
Accounts payable	$ -	$ -
FUND BALANCE		
Restricted	149,551	149,348
Total liabilities and fund balance	$ 149,551	$ 139,381

LINCOLN COUNTY, NEVADA
NONMAJOR PUBLIC IMPROVEMENT SPECIAL REVENUE FUND (105)
SCHEDULE OF REVENUES, EXPENDITURES, AND CHANGES
IN FUND BALANCE - BUDGET (GAAP BASIS) AND ACTUAL
FOR THE YEAR ENDED JUNE 30, 2021
(With Comparative Actual Amounts for the Year Ended June 30, 2020)

	2021 Budget	2021 Actual	Variance - Positive (Negative)	2020 Actual
Revenues:				
Miscellaneous:				
Investment income	$ -	$ 203	$ 203	$ 3,948
Expenditures:				
Current:				
Public works:				
Services and supplies	145,400	-	145,400	-
Excess (deficiency) of revenues over expenditures	(145,400)	203	145,603	3,948
Fund balance:				
Beginning of year	145,400	149,348	3,948	145,400
End of year	$ -	$ 149,551	$ 149,551	$ 149,348

LINCOLN COUNTY, NEVADA
NONMAJOR AIRPORT SPECIAL REVENUE FUND (081)
COMPARATIVE BALANCE SHEETS
JUNE 30, 2021 AND 2020

	2021	2020
ASSETS		
Pooled cash and investments	$ 47,849	$ 23,165
Due from others	17	9,898
Inventory	-	8,091
Total assets	$ 47,866	$ 41,154
LIABILITIES		
Accounts payable	$ 906	$ 9,608
Accrued payroll and benefits	30	73
Total liabilities	936	9,681
FUND BALANCE		
Nonspendable	-	8,091
Committed	46,930	23,382
Total fund balance	46,930	31,473
Total liabilities and fund balance	$ 47,866	$ 41,154

LINCOLN COUNTY, NEVADA
NONMAJOR AIRPORT SPECIAL REVENUE FUND (081)
SCHEDULE OF REVENUES, EXPENDITURES, AND CHANGES IN FUND BALANCE - BUDGET (GAAP BASIS) AND ACTUAL
FOR THE YEAR ENDED JUNE 30, 2021
(With Comparative Actual Amounts for the Year Ended June 30, 2020)

	2021 Budget	2021 Actual	Variance - Positive (Negative)	2020 Actual
Revenues:				
Charges for services:				
Airport fees	$ 26,018	$ 26,080	$ 62	$ 40,853
Miscellaneous:				
Rents	10,300	-	(10,300)	20,400
Other - fuel sales	31,600	47,798	16,198	-
Total miscellaneous	41,900	47,798	5,898	20,400
Total revenues	67,918	73,878	5,960	61,253
Expenditures:				
Current:				
Public works:				
Employee benefits	450	136	314	400
Services and supplies	59,918	58,285	1,633	29,902
Total expenditures	60,368	58,421	1,947	30,302
Excess (deficiency) of revenues over expenditures	7,550	15,457	7,907	30,951
Fund balance:				
Beginning of year	2,672	31,473	28,801	522
End of year	$ 10,222	$ 46,930	$ 36,708	$ 31,473

LINCOLN COUNTY, NEVADA
NONMAJOR PANACA TOWN BUILDING SPECIAL REVENUE FUND (082)
COMPARATIVE BALANCE SHEETS
JUNE 30, 2021 AND 2020

	2021	2020
ASSETS		
Pooled cash and investments	$ 69,878	$ 57,520
Interest receivable	68	89
Total assets	$ 69,946	$ 57,609
LIABILITIES		
Accounts payable	$ -	$ -
FUND BALANCE		
Committed	69,946	57,609
Total liabilities and fund balance	$ 69,946	$ 57,609

LINCOLN COUNTY, NEVADA
NONMAJOR PANACA TOWN BUILDING SPECIAL REVENUE FUND (082)
SCHEDULE OF REVENUES, EXPENDITURES, AND CHANGES
IN FUND BALANCE - BUDGET (GAAP BASIS) AND ACTUAL
FOR THE YEAR ENDED JUNE 30, 2021
(With Comparative Actual Amounts for the Year Ended June 30, 2020)

	2021 Budget	2021 Actual	Variance - Positive (Negative)	2020 Actual
Revenues:				
Miscellaneous:				
Rent	$ 10,500	$ 12,249	$ 1,749	$ 10,569
Investment income	-	88	88	1,459
Total revenues	10,500	12,337	1,837	12,028
Expenditures:				
Current:				
General government:				
Capital outlay	52,000	-	52,000	10,800
Excess (deficiency) of revenues over expenditures	(41,500)	12,337	53,837	1,228
Fund balance:				
Beginning of year	41,500	57,609	16,109	56,381
End of year	$ -	$ 69,946	$ 69,946	$ 57,609

LINCOLN COUNTY, NEVADA
NONMAJOR COURT FACILITY FEES SPECIAL REVENUE FUND (083)
COMPARATIVE BALANCE SHEETS
JUNE 30, 2021 AND 2020

	2021	2020
ASSETS		
Pooled cash and investments	$ 113,365	$ 135,935
Interest receivable	116	224
Total assets	$ 113,481	$ 136,159
LIABILITIES		
Accounts payable	$ -	$ 45,191
FUND BALANCE		
Restricted	113,481	90,968
Total liabilities and fund balance	$ 113,481	$ 136,159

LINCOLN COUNTY, NEVADA
NONMAJOR COURT FACILITY FEES SPECIAL REVENUE FUND (083)
SCHEDULE OF REVENUES, EXPENDITURES, AND CHANGES
IN FUND BALANCE - BUDGET (GAAP BASIS) AND ACTUAL
FOR THE YEAR ENDED JUNE 30, 2021
(With Comparative Actual Amounts for the Year Ended June 30, 2020)

	2021 Budget	2021 Actual	Variance - Positive (Negative)	2020 Actual
Revenues:				
Charges for services:				
Other	$ 45,000	$ 30,492	$ (14,508)	$ 33,511
Miscellaneous:				
Investment income	-	77	77	3,653
Total revenues	45,000	30,569	(14,431)	37,164
Expenditures:				
Current:				
Judicial:				
Service and supplies	-	8,056	(8,056)	-
Capital outlay	189,318	-	189,318	57,876
Total expenditures	189,318	8,056	181,262	57,876
Excess (deficiency) of revenues over expenditures	(144,318)	22,513	166,831	(20,712)
Fund balance:				
Beginning of year	156,680	90,968	(65,712)	111,680
End of year	$ 12,362	$ 113,481	$ 101,119	$ 90,968

LINCOLN COUNTY, NEVADA
NONMAJOR LINCOLN COUNTY LAND ACT
GENERAL SPECIAL REVENUE FUND (091)
COMPARATIVE BALANCE SHEETS
JUNE 30, 2021 AND 2020

	2021	2020
ASSETS		
Pooled cash and investments	$ 6,891	$ 6,879
Interest receivable	8	11
Total assets	$ 6,899	$ 6,890
LIABILITIES		
Accounts payable	$ -	$ -
FUND BALANCE		
Committed	6,899	6,890
Total liabilities and fund balance	$ 6,899	$ 6,890

LINCOLN COUNTY, NEVADA
NONMAJOR LINCOLN COUNTY LAND ACT
GENERAL SPECIAL REVENUE FUND (091)
SCHEDULE OF REVENUES, EXPENDITURES, AND CHANGES IN FUND BALANCE - BUDGET (GAAP BASIS) AND ACTUAL
FOR THE YEAR ENDED JUNE 30, 2021
(With Comparative Actual Amounts for the Year Ended June 30, 2020)

	2021			
	Budget	Actual	Variance - Positive (Negative)	2020 Actual
Revenues:				
Miscellaneous:				
Investment income	$ -	$ 9	$ 9	$ 182
Expenditures:				
Current:				
General government:				
Services and supplies	6,575	-	6,575	-
Excess (deficiency) of revenues over expenditures	(6,575)	9	6,584	182
Fund balance:				
Beginning of year	6,708	6,890	182	6,708
End of year	$ 133	$ 6,899	$ 6,766	$ 6,890

LINCOLN COUNTY, NEVADA
NONMAJOR LINCOLN COUNTY LAND ACT
PLANNING AND DEVELOPMENT SPECIAL REVENUE FUND (093)
COMPARATIVE BALANCE SHEETS
JUNE 30, 2021 AND 2020

	2021	2020
ASSETS		
Pooled cash and investments	$ 701	$ 700
Interest receivable	1	1
Total assets	$ 702	$ 701
LIABILITIES		
Accounts payable	$ -	$ -
FUND BALANCE		
Committed	702	701
Total liabilities and fund balance	$ 702	$ 701

LINCOLN COUNTY, NEVADA
NONMAJOR LINCOLN COUNTY LAND ACT
PLANNING AND DEVELOPMENT SPECIAL REVENUE FUND (093)
SCHEDULE OF REVENUES, EXPENDITURES, AND CHANGES
IN FUND BALANCE - BUDGET (GAAP BASIS) AND ACTUAL
FOR THE YEAR ENDED JUNE 30, 2021
(With Comparative Actual Amounts for the Year Ended June 30, 2020)

	2021 Budget	2021 Actual	Variance - Positive (Negative)	2020 Actual
Revenues:				
Miscellaneous:				
Investment income	$ 100	$ 1	$ (99)	$ 18
Expenditures:				
Current:				
General government:				
Services and supplies	-	-	-	-
Excess (deficiency) of revenues over expenditures	100	1	(99)	18
Fund balance:				
Beginning of year	783	701	(82)	683
End of year	$ 883	$ 702	$ (181)	$ 701

LINCOLN COUNTY, NEVADA
NONMAJOR LINCOLN COUNTY LAND ACT
EDUCATION SPECIAL REVENUE FUND (094)
COMPARATIVE BALANCE SHEETS
JUNE 30, 2021 AND 2020

	2021	2020
ASSETS		
Pooled cash and investments	$ 130,749	$ 130,510
Interest receivable	150	211
Total assets	$ 130,899	$ 130,721
LIABILITIES		
Accounts payable	$ -	$ -
FUND BALANCE		
Committed	130,899	130,721
Total liabilities and fund balance	$ 130,899	$ 130,721

LINCOLN COUNTY, NEVADA
NONMAJOR LINCOLN COUNTY LAND ACT
EDUCATION SPECIAL REVENUE FUND (094)
SCHEDULE OF REVENUES, EXPENDITURES, AND CHANGES
IN FUND BALANCE - BUDGET (GAAP BASIS) AND ACTUAL
FOR THE YEAR ENDED JUNE 30, 2021
(With Comparative Actual Amounts for the Year Ended June 30, 2020)

	2021			
	Budget	Actual	Variance - Positive (Negative)	2020 Actual
Revenues:				
Miscellaneous:				
Investment income	$ -	$ 178	$ 178	$ 3,456
Expenditures:				
Current:				
General government:				
Services and supplies	-	-	-	-
Excess (deficiency) of revenues over expenditures	-	178	178	3,456
Fund balance:				
Beginning of year	114,765	130,721	15,956	127,265
End of year	$ 114,765	$ 130,899	$ 16,134	$ 130,721

LINCOLN COUNTY, NEVADA
NONMAJOR LINCOLN COUNTY WATER
GENERAL SPECIAL REVENUE FUND (090)
COMPARATIVE BALANCE SHEETS
JUNE 30, 2021 AND 2020

	2021	2020
ASSETS		
Pooled cash and investments	$ 634	$ 633
Interest receivable	1	1
Total assets	$ 635	$ 634
LIABILITIES		
Accounts payable	$ -	$ -
FUND BALANCE		
Committed	635	634
Total liabilities and fund balance	$ 635	$ 634

LINCOLN COUNTY, NEVADA
NONMAJOR LINCOLN COUNTY WATER
GENERAL SPECIAL REVENUE FUND (090)
SCHEDULE OF REVENUES, EXPENDITURES, AND CHANGES
IN FUND BALANCE - BUDGET (GAAP BASIS) AND ACTUAL
FOR THE YEAR ENDED JUNE 30, 2021
(With Comparative Actual Amounts for the Year Ended June 30, 2020)

	2021 Budget	2021 Actual	Variance - Positive (Negative)	2020 Actual
Revenues:				
Miscellaneous:				
Investment income	$ -	$ 1	$ 1	$ 16
Expenditures:				
Current:				
General government:				
Services and supplies	-	-	-	-
Excess (deficiency) of revenues over expenditures	-	1	1	16
Fund balance:				
Beginning of year	618	634	16	618
End of year	$ 618	$ 635	$ 17	$ 634

LINCOLN COUNTY, NEVADA
NONMAJOR LINCOLN COUNTY WATER
SPECIAL PROJECTS SPECIAL REVENUE FUND (087)
COMPARATIVE BALANCE SHEETS
JUNE 30, 2021 AND 2020

	2021	2020
ASSETS		
Pooled cash and investments	$ 8,799	$ 8,783
Interest receivable	10	14
Total assets	$ 8,809	$ 8,797
LIABILITIES		
Accounts payable	$ -	$ -
FUND BALANCE		
Committed	8,809	8,797
Total liabilities and fund balance	$ 8,809	$ 8,797

LINCOLN COUNTY, NEVADA
NONMAJOR LINCOLN COUNTY WATER
SPECIAL PROJECTS SPECIAL REVENUE FUND (087)
SCHEDULE OF REVENUES, EXPENDITURES, AND CHANGES
IN FUND BALANCE - BUDGET (GAAP BASIS) AND ACTUAL
FOR THE YEAR ENDED JUNE 30, 2021
(With Comparative Actual Amounts for the Year Ended June 30, 2020)

	2021			
	Budget	Actual	Variance - Positive (Negative)	2020 Actual
Revenues:				
Miscellaneous:				
Investment income	$ -	$ 12	$ 12	$ 232
Expenditures:				
Current:				
General government:				
Services and supplies	8,398	-	8,398	-
Excess (deficiency) of revenues over expenditures	(8,398)	12	8,410	232
Fund balance:				
Beginning of year	8,565	8,797	232	8,565
End of year	$ 167	$ 8,809	$ 8,642	$ 8,797

LINCOLN COUNTY, NEVADA
NONMAJOR LINCOLN COUNTY WATER
PLANNING AND DEVELOPMENT SPECIAL REVENUE FUND (086)
COMPARATIVE BALANCE SHEETS
JUNE 30, 2021 AND 2020

	2021	2020
ASSETS		
Pooled cash and investments	$ 87,283	$ 87,123
Interest receivable	100	141
Total assets	$ 87,383	$ 87,264
LIABILITIES		
Accounts payable	$ -	$ -
FUND BALANCE		
Committed	87,383	87,264
Total liabilities and fund balance	$ 87,383	$ 87,264

LINCOLN COUNTY, NEVADA
NONMAJOR LINCOLN COUNTY WATER
PLANNING AND DEVELOPMENT SPECIAL REVENUE FUND (086)
SCHEDULE OF REVENUES, EXPENDITURES, AND CHANGES
IN FUND BALANCE - BUDGET (GAAP BASIS) AND ACTUAL
FOR THE YEAR ENDED JUNE 30, 2021
(With Comparative Actual Amounts for the Year Ended June 30, 2020)

	2021 Budget	2021 Actual	Variance - Positive (Negative)	2020 Actual
Revenues:				
Miscellaneous:				
Investment income	$ 50	$ 119	$ 69	$ 2,307
Expenditures:				
Current:				
General government:				
Services and supplies	83,414	-	83,414	-
Excess (deficiency) of revenues over expenditures	(83,364)	119	83,483	2,307
Fund balance:				
Beginning of year	85,007	87,264	2,257	84,957
End of year	$ 1,643	$ 87,383	$ 85,740	$ 87,264

LINCOLN COUNTY, NEVADA
NONMAJOR LINCOLN COUNTY WATER SPECIAL USE SPECIAL REVENUE FUND (084)
COMPARATIVE BALANCE SHEETS
JUNE 30, 2021 AND 2020

	2021	2020
ASSETS		
Pooled cash and investments	$ 1,262,149	$ 1,239,861
Interest receivable	1,432	2,006
Interfund receivable	150,000	170,000
Total assets	$ 1,413,581	$ 1,411,867
LIABILITIES		
Accounts payable	$ -	$ -
FUND BALANCE		
Committed	1,413,581	1,411,867
Total liabilities and fund balance	$ 1,413,581	$ 1,326,168

LINCOLN COUNTY, NEVADA
NONMAJOR LINCOLN COUNTY WATER SPECIAL USE SPECIAL REVENUE FUND (084)
SCHEDULE OF REVENUES, EXPENDITURES, AND CHANGES
IN FUND BALANCE - BUDGET (GAAP BASIS) AND ACTUAL
FOR THE YEAR ENDED JUNE 30, 2021
(With Comparative Actual Amounts for the Year Ended June 30, 2020)

	2021 Budget	2021 Actual	Variance - Positive (Negative)	2020 Actual
Revenues:				
Miscellaneous:				
Investment income	$ 500	$ 1,714	$ 1,214	$ 32,809
Expenditures:				
Current:				
General government:				
Services and supplies	195,740	-	195,740	-
Excess (deficiency) of revenues over expenditures	(195,240)	1,714	196,954	32,809
Fund balance:				
Beginning of year	1,379,558	1,411,867	32,309	1,379,058
End of year	$ 1,184,318	$ 1,413,581	$ 229,263	$ 1,411,867

LINCOLN COUNTY, NEVADA
NONMAJOR LINCOLN COUNTY WATER
GRANT MATCH SPECIAL REVENUE FUND (089)
COMPARATIVE BALANCE SHEETS
JUNE 30, 2021 AND 2020

	2021	2020
ASSETS		
Pooled cash and investments	$ 87,217	$ 87,057
Interest receivable	100	141
Total assets	$ 87,317	$ 87,198
LIABILITIES		
Accounts payable	$ -	$ -
FUND BALANCE		
Committed	87,317	87,198
Total liabilities and fund balance	$ 87,317	$ 87,198

LINCOLN COUNTY, NEVADA
NONMAJOR LINCOLN COUNTY WATER
GRANT MATCH SPECIAL REVENUE FUND (089)
SCHEDULE OF REVENUES, EXPENDITURES, AND CHANGES
IN FUND BALANCE - BUDGET (GAAP BASIS) AND ACTUAL
FOR THE YEAR ENDED JUNE 30, 2021
(With Comparative Actual Amounts for the Year Ended June 30, 2020)

	2021 Budget	2021 Actual	Variance - Positive (Negative)	2020 Actual
Revenues:				
Miscellaneous:				
Investment income	$ 150	$ 119	$ (31)	$ 2,305
Expenditures:				
Current:				
General government:				
Services and supplies	83,553	-	83,553	-
Excess (deficiency) of revenues over expenditures	(83,403)	119	83,522	2,305
Fund balance:				
Beginning of year	85,043	87,198	2,155	84,893
End of year	$ 1,640	$ 87,317	$ 85,677	$ 87,198

LINCOLN COUNTY, NEVADA
NONMAJOR LINCOLN COUNTY WATER DISTRICT
GENERAL SPECIAL REVENUE FUND (114, 102)
COMPARATIVE BALANCE SHEETS
JUNE 30, 2021 AND 2020

	2021	2020
ASSETS		
Pooled cash and investments	$ 279,218	$ 326,139
Interest receivable	996	1,067
Prepaid expenses	1,549	1,554
Total assets	$ 281,763	$ 328,760
LIABILITIES		
Accounts payable	$ -	$ 5,361
Accrued payroll and benefits	6,552	6,766
Total liabilities	6,552	12,127
FUND BALANCE		
Nonspendable	1,549	1,554
Committed	273,662	315,079
Total fund balance	275,211	316,633
Total liabilities and fund balance	$ 281,763	$ 328,760

LINCOLN COUNTY, NEVADA
NONMAJOR LINCOLN COUNTY WATER DISTRICT
GENERAL SPECIAL REVENUE FUND (114, 102)
SCHEDULE OF REVENUES, EXPENDITURES, AND CHANGES
IN FUND BALANCE - BUDGET (GAAP BASIS) AND ACTUAL
FOR THE YEAR ENDED JUNE 30, 2021
(With Comparative Actual Amounts for the Year Ended June 30, 2020)

	2021 Budget	2021 Actual	Variance - Positive (Negative)	2020 Actual
Revenues:				
Miscellaneous:				
Rent	$ -	$ -	$ -	$ 500
Investment income	-	998	998	12,338
Total revenues	-	998	998	12,838
Expenditures:				
Current:				
General government:				
Salaries and wages	95,000	89,590	5,410	85,070
Employee benefits	37,000	36,576	424	37,902
Services and supplies	86,000	116,254	(30,254)	54,853
Total general government	218,000	242,420	(24,420)	177,825
Excess (deficiency) of revenues over expenditures	(218,000)	(241,422)	(23,422)	(164,987)
Other financing sources (uses):				
Operating transfers in	200,000	200,000	-	200,000
Net change in fund balance	(18,000)	(41,422)	(23,422)	35,013
Fund balance:				
Beginning of year	49,653	316,633	266,980	281,620
End of year	$ 31,653	$ 275,211	$ 243,558	$ 316,633

LINCOLN COUNTY, NEVADA
NONMAJOR LINCOLN COUNTY WATER DISTRICT
PLANNING & DEVELOPMENT SPECIAL REVENUE FUND (100)
COMPARATIVE BALANCE SHEETS
JUNE 30, 2021 AND 2020

	2021	2020
ASSETS		
Pooled cash and investments	$ 939,790	$ 948,216
Interest receivable	3,630	3,920
Total assets	$ 943,420	$ 952,136
LIABILITIES		
Accounts payable	$ 9,105	$ -
FUND BALANCE		
Committed	934,315	952,136
Total liabilities and fund balance	$ 943,420	$ 952,136

LINCOLN COUNTY, NEVADA
NONMAJOR LINCOLN COUNTY WATER DISTRICT
PLANNING & DEVELOPMENT SPECIAL REVENUE FUND (100)
SCHEDULE OF REVENUES, EXPENDITURES, AND CHANGES
IN FUND BALANCE - BUDGET (GAAP BASIS) AND ACTUAL
FOR THE YEAR ENDED JUNE 30, 2021
(With Comparative Actual Amounts for the Year Ended June 30, 2020)

	2021			
	Budget	Actual	Variance - Positive (Negative)	2020 Actual
Revenues:				
Miscellaneous:				
Investment income	$ 10,000	$ 3,604	$ (6,396)	$ 45,303
Expenditures:				
Current:				
General government:				
Services and supplies	926,833	21,425	905,408	-
Excess (deficiency) of revenues over expenditures	(916,833)	(17,821)	899,012	45,303
Fund balance:				
Beginning of year	916,833	952,136	35,303	906,833
End of year	$ -	$ 934,315	$ 934,315	$ 952,136

LINCOLN COUNTY, NEVADA
NONMAJOR LINCOLN COUNTY WATER DISTRICT
SPECIAL PROJECTS SPECIAL REVENUE FUND (101)
COMPARATIVE BALANCE SHEETS
JUNE 30, 2021 AND 2020

	2021	2020
ASSETS		
Pooled cash and investments	$ 701,585	$ 698,566
Interest receivable	2,624	2,813
Prepaid expenses	24,000	32,000
Total assets	$ 728,209	$ 733,379
LIABILITIES		
Accounts payable	$ -	$ -
FUND BALANCE		
Nonspendable	24,000	32,000
Committed	704,209	701,379
Total fund balance	728,209	733,379
Total liabilities and fund balance	$ 728,209	$ 733,379

LINCOLN COUNTY, NEVADA
NONMAJOR LINCOLN COUNTY WATER DISTRICT
SPECIAL PROJECTS SPECIAL REVENUE FUND (101)
SCHEDULE OF REVENUES, EXPENDITURES, AND CHANGES IN FUND BALANCE - BUDGET (GAAP BASIS) AND ACTUAL
FOR THE YEAR ENDED JUNE 30, 2021
(With Comparative Actual Amounts for the Year Ended June 30, 2020)

	2021 Budget	2021 Actual	Variance - Positive (Negative)	2020 Actual
Revenues:				
Miscellaneous:				
Other - capital improvement	$ 197,000	$ -	$ (197,000)	$ -
Investment income	6,000	2,830	(3,170)	32,510
Total revenues	203,000	2,830	(200,170)	32,510
Expenditures:				
Current:				
General government:				
Services and supplies	917,869	8,000	909,869	8,000
Excess (deficiency) of revenues over expenditures	(714,869)	(5,170)	709,699	24,510
Fund balance:				
Beginning of year	911,869	733,379	(178,490)	708,869
End of year	$ 197,000	$ 728,209	$ 531,209	$ 733,379

LINCOLN COUNTY, NEVADA
NONMAJOR ASSESSOR TECHNOLOGY SPECIAL REVENUE FUND (106)
COMPARATIVE BALANCE SHEETS
JUNE 30, 2021 AND 2020

	2021	2020
ASSETS		
Pooled cash and investments	$ 45,069	$ 38,983
LIABILITIES		
Accounts payable	$ -	$ -
FUND BALANCE		
Restricted	45,069	38,983
Total liabilities and fund balance	$ 45,069	$ 38,983

LINCOLN COUNTY, NEVADA
NONMAJOR ASSESSOR TECHNOLOGY SPECIAL REVENUE FUND (106)
SCHEDULE OF REVENUES, EXPENDITURES, AND CHANGES
IN FUND BALANCE - BUDGET (GAAP BASIS) AND ACTUAL
FOR THE YEAR ENDED JUNE 30, 2021
(With Comparative Actual Amounts for the Year Ended June 30, 2020)

	2021 Budget	2021 Actual	Variance - Positive (Negative)	2020 Actual
Revenues:				
Charges for services:				
Other	$ 18,000	$ 11,713	$ (6,287)	$ 13,661
Expenditures:				
Current:				
General government:				
Services and supplies	20,000	475	19,525	10,000
Capital outlay	22,000	5,152	16,848	-
Total expenditures	42,000	5,627	36,373	10,000
Excess (deficiency) of revenues over expenditures	(24,000)	6,086	30,086	3,661
Fund balance:				
Beginning of year	53,322	38,983	(14,339)	35,322
End of year	$ 29,322	$ 45,069	$ 15,747	$ 38,983

LINCOLN COUNTY, NEVADA
NONMAJOR DISTRICT COURT TECHNOLOGY SPECIAL REVENUE FUND (080)
COMPARATIVE BALANCE SHEETS
JUNE 30, 2021 AND 2020

	2021	2020
ASSETS		
Pooled cash and investments	$ 5,136	$ 5,120
LIABILITIES		
Accounts payable	$ -	$ -
FUND BALANCE		
Restricted	5,136	5,120
Total liabilities and fund balance	$ 5,136	$ 5,120

LINCOLN COUNTY, NEVADA
NONMAJOR DISTRICT COURT TECHNOLOGY SPECIAL REVENUE FUND (080)
SCHEDULE OF REVENUES, EXPENDITURES, AND CHANGES
IN FUND BALANCE - BUDGET (GAAP BASIS) AND ACTUAL
FOR THE YEAR ENDED JUNE 30, 2021
(With Comparative Actual Amounts for the Year Ended June 30, 2020)

	2021			
	Budget	Actual	Variance - Positive (Negative)	2020 Actual
Revenues:				
Charges for services	$ -	$ 16	$ 16	$ -
Expenditures:				
Current:				
Judicial:				
Services and supplies	5,120	-	5,120	-
Excess (deficiency) of revenues over expenditures	(5,120)	16	5,136	-
Fund balance:				
Beginning of year	5,120	5,120	-	5,120
End of year	$ -	$ 5,136	$ 5,136	$ 5,120

LINCOLN COUNTY, NEVADA
NONMAJOR DISTRICT COURT SPECIALTY COURT SPECIAL REVENUE FUND (113)
COMPARATIVE BALANCE SHEETS
JUNE 30, 2021 AND 2020

	2021	2020
ASSETS		
Pooled cash and investments	$ 4,235	$ 9,902
LIABILITIES		
Accounts payable	$ -	$ 1,177
FUND BALANCE		
Restricted	4,235	8,725
Total liabilities and fund balance	$ 4,235	$ 9,902

LINCOLN COUNTY, NEVADA
NONMAJOR DISTRICT COURT SPECIALTY COURT SPECIAL REVENUE FUND (113)
SCHEDULE OF REVENUES, EXPENDITURES, AND CHANGES
IN FUND BALANCE - BUDGET (GAAP BASIS) AND ACTUAL
FOR THE YEAR ENDED JUNE 30, 2021
(With Comparative Actual Amounts for the Year Ended June 30, 2020)

	2021 Budget	2021 Actual	Variance-Positive (Negative)	2020 Actual
Revenues:				
Charges for services:				
Clerk fees	$ 10,000	$ 13,896	$ 3,896	$ 9,686
Miscellaneous:				
Donation	-	160	160	-
Total revenues	10,000	14,056	4,056	9,686
Expenditures:				
Judicial:				
Services and supplies	20,725	20,546	179	16,050
Excess (deficiency) of revenues over expenditures	(10,725)	(6,490)	4,235	(6,364)
Other financing sources (uses):				
Transfers in	2,000	2,000	-	15,000
Net change in fund balance	(8,725)	(4,490)	4,235	8,636
Fund balance:				
Beginning of year	8,725	8,725	-	89
End of year	$ -	$ 4,235	$ 4,235	$ 8,725

LINCOLN COUNTY, NEVADA
NONMAJOR COURT SECURITY FEE SPECIAL REVENUE FUND (122)
COMPARATIVE BALANCE SHEETS
JUNE 30, 2021 AND 2020

	2021	2020
ASSETS		
Pooled cash and investments	$ 13,459	$ 12,436
Interest receivable	15	20
Total assets	$ 13,474	$ 12,456
LIABILITIES		
Accounts payable	$ -	$ -
FUND BALANCE		
Restricted	13,474	12,456
Total liabilities and fund balance	$ 13,474	$ 12,456

LINCOLN COUNTY, NEVADA
NONMAJOR COURT SECURITY FEE SPECIAL REVENUE FUND (122)
SCHEDULE OF REVENUES, EXPENDITURES, AND CHANGES
IN FUND BALANCE - BUDGET (GAAP BASIS) AND ACTUAL
FOR THE YEAR ENDED JUNE 30, 2021
(With Comparative Actual Amounts for the Year Ended June 30, 2020)

	2021 Budget	2021 Actual	Variance-Positive (Negative)	2020 Actual
Revenues:				
Charges for services:				
Clerk fees	$ 700	$ 1,000	$ 300	$ 1,120
Miscellaneous:				
Investment income	-	18	18	323
Total revenues	700	1,018	318	1,443
Expenditures:				
Judicial:				
Services and supplies	12,413	-	12,413	-
Excess (deficiency) of revenues over expenditures	(11,713)	1,018	12,731	1,443
Fund balance:				
Beginning of year	11,713	12,456	743	11,013
End of year	$ -	$ 13,474	$ 13,474	$ 12,456

LINCOLN COUNTY, NEVADA
NONMAJOR DISTRICT COURT ENRICHMENT SPECIAL REVENUE FUND (123)
COMPARATIVE BALANCE SHEETS
JUNE 30, 2021 AND 2020

	2021	2020
ASSETS		
Pooled cash and investments	$ 63,553	$ 57,383
Interest receivable	67	91
Total assets	$ 63,620	$ 57,474
LIABILITIES		
Accounts payable	$ -	$ -
FUND BALANCE		
Restricted	63,620	57,474
Total liabilities and fund balance	$ 63,620	$ 50,475

LINCOLN COUNTY, NEVADA
NONMAJOR DISTRICT COURT ENRICHMENT SPECIAL REVENUE FUND (123)
SCHEDULE OF REVENUES, EXPENDITURES, AND CHANGES
IN FUND BALANCE - BUDGET (GAAP BASIS) AND ACTUAL
FOR THE YEAR ENDED JUNE 30, 2021
(With Comparative Actual Amounts for the Year Ended June 30, 2020)

	2021 Budget	2021 Actual	Variance-Positive (Negative)	2020 Actual
Revenues:				
Charges for services:				
Clerk fees	$ 3,500	$ 6,062	$ 2,562	$ 5,508
Miscellaneous:				
Investment income	-	84	84	1,491
Total revenues	3,500	6,146	2,646	6,999
Expenditures:				
Current:				
Judicial:				
Services and supplies	57,475	-	57,475	-
Excess (deficiency) of revenues over expenditures	(53,975)	6,146	60,121	6,999
Fund balance:				
Beginning of year	53,975	57,474	3,499	50,475
End of year	$ -	$ 63,620	$ 63,620	$ 57,474

LINCOLN COUNTY, NEVADA
NONMAJOR DEMERIT POINT REDUCTION SPECIAL REVENUE FUND (135)
COMPARATIVE BALANCE SHEETS
JUNE 30, 2021 AND 2020

	2021	2020
ASSETS		
Pooled cash and investments	$ 3,447	$ 1,837
Interest receivable	2	-
Total assets	$ 3,449	$ 1,837
LIABILITIES		
Accounts payable	$ -	$ -
FUND BALANCE		
Restricted	3,449	1,837
Total liabilities and fund balance	$ 3,449	$ 1,837

LINCOLN COUNTY, NEVADA
NONMAJOR DEMERIT POINT REDUCTION SPECIAL REVENUE FUND (135)
SCHEDULE OF REVENUES, EXPENDITURES, AND CHANGES
IN FUND BALANCE - BUDGET (GAAP BASIS) AND ACTUAL
FOR THE YEAR ENDED JUNE 30, 2021
(With Comparative Actual Amounts for the Year Ended June 30, 2020)

	2021 Budget	2021 Actual	Variance-Positive (Negative)	2020 Actual
Revenues:				
Charges for services:				
Clerk fees	$ 6,500	$ 5,606	$ (894)	$ 1,837
Miscellaneous:				
Investment income	-	6	6	-
Total revenues	6,500	5,612	(888)	1,837
Expenditures:				
Current:				
Judicial:				
Services and supplies	6,500	4,000	2,500	-
Excess (deficiency) of revenues over expenditures	-	1,612	1,612	1,837
Fund balance:				
Beginning of year	1,837	1,837	-	-
End of year	$ 1,837	$ 3,449	$ 1,612	$ 1,837

LINCOLN COUNTY, NEVADA
NONMAJOR FUND - PROPERTY MANAGEMENT SPECIAL REVENUE FUND (124)
COMPARATIVE BALANCE SHEETS
JUNE 30, 2021 AND 2020

	2021	2020
ASSETS		
Pooled cash and investments	$ 79,642	$ 81,586
LIABILITIES		
Accounts payable	$ 5,373	$ 5,787
Accrued payroll and benefits	345	371
Total liabilities	5,718	6,158
FUND BALANCE		
Committed for general government	73,924	75,428
Total liabilities and fund balance	$ 79,642	$ 81,586

LINCOLN COUNTY, NEVADA
NONMAJOR FUND - PROPERTY MANAGEMENT SPECIAL REVENUE FUND (124)
SCHEDULE OF REVENUES, EXPENDITURES, AND CHANGES
IN FUND BALANCE - BUDGET (GAAP BASIS) AND ACTUAL
FOR THE YEAR ENDED JUNE 30, 2021
(With Comparative Actual Amounts for the Year Ended June 30, 2020)

	2021			
	Budget	Actual	Variance-Positive (Negative)	2020 Actual
Revenues:				
Miscellaneous:				
Rent	$ 15,000	$ 15,630	$ 630	$ 14,200
Expenditures:				
General government:				
Salaries and wages	33,505	21,055	12,450	18,429
Employee benefits	12,219	1,388	10,831	1,320
Services and supplies	36,480	34,691	1,789	26,743
Total expenditures	82,204	57,134	25,070	46,492
Excess (deficiency) of revenues over expenditures	(67,204)	(41,504)	25,700	(32,292)
Other financing sources (uses):				
Operating transfer in	40,000	40,000	-	40,000
Net change in fund balance	(27,204)	(1,504)	25,700	7,708
Fund balance:				
Beginning of year	63,453	75,428	11,975	67,720
End of year	$ 36,249	$ 73,924	$ 37,675	$ 75,428

LINCOLN COUNTY, NEVADA
INTERNALLY REPORTED (BUDGETARY BASIS) FUNDS REPORTED AS PART OF THE GENERAL FUND FOR EXTERNAL REPORTING PURPOSES
COMBINING BALANCE SHEET
JUNE 30, 2021
(With Comparative Actual Amounts for 2020)

	Stabilization	Planning	Rachel Jones Memorial Cemetery	Flood Control
ASSETS				
Pooled cash and investments	$ 137,142	$ 57,439	$ 827	$ 38,110
Interest receivable	157	52	-	-
Total assets	$ 137,299	$ 57,491	$ 827	$ 38,110
LIABILITIES				
Accounts payable	$ -	$ 5,234	$ -	$ -
Accrued payroll and benefits	-	2,195	-	-
Total liabilities	-	7,429	-	-
FUND BALANCE				
Restricted for:				
Stabilization	137,299	-	-	-
Rachel Jones Cemetery	-	-	827	-
General government	-	-	-	-
Committed for:				
Planning	-	50,062	-	-
Flood Control	-	-	-	38,110
Land Act	-	-	-	-
Water	-	-	-	-
Total fund balance	137,299	50,062	827	38,110
Total liabilities and fund balance	$ 137,299	$ 57,491	$ 827	$ 38,110

Special Projects	Lincoln County Land Act Emergency Disaster	Lincoln County Water Emergency Disaster	Totals 2021	Totals 2020
$ 318,018	$ 9,403	$ 66,466	$ 627,405	$ 662,281
410	11	76	706	1,049
$ 318,428	$ 9,414	$ 66,542	$ 628,111	$ 663,330
$ -	$ -	$ -	$ 5,234	$ 6,229
-	-	-	2,195	2,719
-	-	-	7,429	8,948
-	-	-	137,299	137,113
-	-	-	827	827
318,428	-	-	318,428	357,965
-	-	-	50,062	43,603
-	-	-	38,110	39,015
-	9,414	-	9,414	9,408
-	-	66,542	66,542	66,451
318,428	9,414	66,542	620,682	654,382
$ 318,428	$ 9,414	$ 66,542	$ 628,111	$ 663,330

LINCOLN COUNTY, NEVADA
INTERNALLY REPORTED (BUDGETARY BASIS) FUNDS REPORTED AS PART OF THE GENERAL FUND FOR EXTERNAL REPORTING PURPOSES
COMBINING SCHEDULE OF REVENUES, EXPENDITURES, AND CHANGES IN FUND BALANCES
FOR THE YEAR ENDED JUNE 30, 2021
(With Comparative Actual Amounts for the Year Ended June 30, 2020)

	Stabilization	Planning	Rachel Jones Memorial Cemetery	Flood Control
Revenues:				
Charges for services	$ -	$ 12,305	$ -	$ -
Miscellaneous	186	39	-	-
Total revenues	186	12,344	-	-
Expenditures:				
General government	-	-	-	-
Public works	-	80,885	-	905
Total expenditures	-	80,885	-	905
Excess (deficiency) of revenues over expenditures	186	(68,541)	-	(905)
Other financing sources (uses):				
Operating transfers in	-	75,000	-	-
Operating transfers out	-	-	-	-
Total other financing sources (uses)	-	75,000	-	-
Net change in fund balance	186	6,459	-	(905)
Fund balance:				
Beginning of year	137,113	43,603	827	39,015
End of year	$ 137,299	$ 50,062	$ 827	$ 38,110

Special Projects	Lincoln County Land Act Emergency Disaster	Lincoln County Water Emergency Disaster	Totals 2021	Totals 2020
$ -	$ -	$ -	$ 12,305	$ 14,833
463	6	91	785	30,280
463	6	91	13,090	45,113
-	-	-	-	78,383
-	-	-	81,790	83,622
-	-	-	81,790	162,005
463	6	91	(68,700)	(116,892)
-	-	-	75,000	75,000
(40,000)	-	-	(40,000)	-
(40,000)	-	-	35,000	75,000
(39,537)	6	91	(33,700)	(41,892)
357,965	9,408	66,451	654,382	696,274
$ 318,428	$ 9,414	$ 66,542	$ 620,682	$ 654,382

LINCOLN COUNTY, NEVADA
STABILIZATION (075)
INTERNALLY REPORTED (BUDGETARY BASIS) FUND REPORTED
AS PART OF THE GENERAL FUND FOR EXTERNAL REPORTING PURPOSES
COMPARATIVE BALANCE SHEETS
JUNE 30, 2021 AND 2020

	2021	2020
ASSETS		
Pooled cash and investments	$ 137,142	$ 136,891
Interest receivable	157	222
Total assets	$ 137,299	$ 137,113
LIABILITIES		
Accounts payable	$ -	$ -
FUND BALANCE		
Restricted for stabilization	137,299	137,113
Total fund balance	$ 137,299	$ 137,113

LINCOLN COUNTY, NEVADA
STABILIZATION (075)
INTERNALLY REPORTED (BUDGETARY BASIS) FUND REPORTED
AS PART OF THE GENERAL FUND FOR EXTERNAL REPORTING PURPOSES
SCHEDULE OF REVENUES, EXPENDITURES AND CHANGES IN FUND BALANCE
BUDGET (GAAP BASIS) AND ACTUAL
FOR THE YEAR ENDED JUNE 30, 2021
(With Comparative Actual Amounts for the Year Ended June 30, 2020)

	2021 Budget	2021 Actual	Variance - Positive (Negative)	2020 Actual
Revenues:				
Miscellaneous:				
Investment income	$ 250	$ 186	$ (64)	$ 3,625
Expenditures:				
Current:				
General government:				
Service and supplies	133,988	-	133,988	-
Excess (deficiency) of revenues over expenditures	(133,738)	186	133,924	3,625
Fund balance:				
Beginning of year	133,738	137,113	3,375	133,488
End of year	$ -	$ 137,299	$ 137,299	$ 137,113

LINCOLN COUNTY, NEVADA
PLANNING (110)
INTERNALLY REPORTED (BUDGETARY BASIS) FUND REPORTED
AS PART OF THE GENERAL FUND FOR EXTERNAL REPORTING PURPOSES
COMPARATIVE BALANCE SHEETS
JUNE 30, 2021 AND 2020

	2021	2020
ASSETS		
Pooled cash and investments	$ 57,439	$ 52,455
Interest receivable	52	96
Total assets	$ 57,491	$ 52,551
LIABILITIES		
Accounts payable	$ 5,234	$ 6,229
Accrued payroll and benefits	2,195	2,719
Total liabilities	7,429	8,948
FUND BALANCE		
Committed for planning	50,062	43,603
Total liabilities and fund balance	$ 57,491	$ 52,551

LINCOLN COUNTY, NEVADA
PLANNING (110)
INTERNALLY REPORTED (BUDGETARY BASIS) FUND REPORTED AS PART OF THE GENERAL FUND FOR EXTERNAL REPORTING PURPOSES
SCHEDULE OF REVENUES, EXPENDITURES, AND CHANGES IN FUND BALANCE - BUDGET (GAAP BASIS) AND ACTUAL
FOR THE YEAR ENDED JUNE 30, 2021
(With Comparative Actual Amounts for the Year Ended June 30, 2020)

	2021 Budget	2021 Actual	Variance-Positive (Negative)	2020 Actual
Revenues:				
Charges for services:				
Planning fees	$ 10,500	$ 12,305	$ 1,805	$ 14,833
Miscellaneous:				
Investment income	-	39	39	1,566
Total revenues	10,500	12,344	1,844	16,399
Expenditures:				
Current:				
Public works:				
Salaries and wages	70,161	60,245	9,916	60,853
Employee benefits	23,637	14,146	9,491	14,669
Services and supplies	9,560	6,494	3,066	7,195
Total expenditures	103,358	80,885	22,473	82,717
Excess (deficiency) of revenues over expenditures	(92,858)	(68,541)	24,317	(66,318)
Other financing sources (uses):				
Operating transfer in	75,000	75,000	-	75,000
Net change in fund balance	(17,858)	6,459	24,317	8,682
Fund balance:				
Beginning of year	25,643	43,603	17,960	34,921
End of year	$ 7,785	$ 50,062	$ 42,277	$ 43,603

LINCOLN COUNTY, NEVADA
RACHEL JONES MEMORIAL CEMETERY (062)
INTERNALLY REPORTED (BUDGETARY BASIS) FUND REPORTED
AS PART OF THE GENERAL FUND FOR EXTERNAL REPORTING PURPOSES
COMPARATIVE BALANCE SHEETS
JUNE 30, 2021 AND 2020

	2021	2020
ASSETS		
Pooled cash and investments	$ 827	$ 827
LIABILITIES		
Accounts payable	$ -	$ -
FUND BALANCE		
Restricted for Rachel Jones Cemetery	827	827
Total fund balance	$ 827	$ 827

LINCOLN COUNTY, NEVADA
RACHEL JONES MEMORIAL CEMETERY (062)
INTERNALLY REPORTED (BUDGETARY BASIS) FUND REPORTED
AS PART OF THE GENERAL FUND FOR EXTERNAL REPORTING PURPOSES
SCHEDULE OF REVENUES, EXPENDITURES, AND CHANGES
IN FUND BALANCE - BUDGET (GAAP BASIS) AND ACTUAL
FOR THE YEAR ENDED JUNE 30, 2021
(With Comparative Actual Amounts for the Year Ended June 30, 2020)

	2021			2020
	Budget	Actual	Variance - Positive (Negative)	Actual
Revenues:				
Miscellaneous	$ -	$ -	$ -	$ -
Expenditures:				
Health:				
Services and supplies	827	-	827	-
Excess (deficiency) of revenues over expenditures	(827)	-	827	-
Fund balance:				
Beginning of year	827	827	-	827
End of year	$ -	$ 827	$ 827	$ 827

LINCOLN COUNTY, NEVADA
FLOOD CONTROL (004)
INTERNALLY REPORTED (BUDGETARY BASIS) FUND REPORTED
AS PART OF THE GENERAL FUND FOR EXTERNAL REPORTING PURPOSES
COMPARATIVE BALANCE SHEETS
JUNE 30, 2021 AND 2020

	2021	2020
ASSETS		
Pooled cash and investments	$ 38,110	$ 39,015
LIABILITIES		
Accounts payable	$ -	$ -
FUND BALANCE		
Committed for flood control	38,110	39,015
Total liabilities and fund balance	$ 38,110	$ 39,015

LINCOLN COUNTY, NEVADA
FLOOD CONTROL (004)
INTERNALLY REPORTED (BUDGETARY BASIS) FUND REPORTED
AS PART OF THE GENERAL FUND FOR EXTERNAL REPORTING PURPOSES
SCHEDULE OF REVENUES, EXPENDITURES, AND CHANGES
IN FUND BALANCE - BUDGET (GAAP BASIS) AND ACTUAL
FOR THE YEAR ENDED JUNE 30, 2021
(With Comparative Actual Amounts for the Year Ended June 30, 2020)

	2021 Budget	2021 Actual	Variance-Positive (Negative)	2020 Actual
Revenues:				
Intergovernmental	$ 20,000	$ -	$ (20,000)	$ -
Expenditures:				
Current:				
Public works:				
Services and supplies	-	905	(905)	905
Capital outlay	40,000	-	40,000	-
Total expenditures	40,000	905	39,095	905
Excess (deficiency) of revenues over expenditures	(20,000)	(905)	19,095	(905)
Fund balance:				
Beginning of year	34,920	39,015	4,095	39,920
End of year	$ 14,920	$ 38,110	$ 23,190	$ 39,015

LINCOLN COUNTY, NEVADA
SPECIAL PROJECTS (129)
INTERNALLY REPORTED (BUDGETARY BASIS) FUND REPORTED
AS PART OF THE GENERAL FUND FOR EXTERNAL REPORTING PURPOSES
COMPARATIVE BALANCE SHEETS
JUNE 30, 2021 AND 2020

	2021	2020
ASSETS		
Pooled cash and investments	$ 318,018	$ 357,363
Interest receivable	410	602
Total assets	$ 318,428	$ 357,965
LIABILITIES		
Accounts payable	$ -	$ -
FUND BALANCE		
Restricted for general government	318,428	357,965
Total liabilities and fund balance	$ 318,428	$ 357,965

LINCOLN COUNTY, NEVADA
SPECIAL PROJECTS (129)
INTERNALLY REPORTED (BUDGETARY BASIS) FUND REPORTED
AS PART OF THE GENERAL FUND FOR EXTERNAL REPORTING PURPOSES
SCHEDULE OF REVENUES, EXPENDITURES, AND CHANGES
IN FUND BALANCE - BUDGET (GAAP BASIS) AND ACTUAL
FOR THE YEAR ENDED JUNE 30, 2021
(With Comparative Actual Amounts for the Year Ended June 30, 2020)

	2021 Budget	2021 Actual	Variance - Positive (Negative)	2020 Actual
Revenues:				
Miscellaneous:				
Investment Income	$ 6,265	$ 463	$ (5,802)	$ 9,841
Other	-	-	-	13,135
	6,265	463	(5,802)	22,976
Expenditures:				
General government:				
Services and supplies	-	-	-	21,435
Capital outlay	765,000	-	765,000	-
Total expenditures	765,000	-	765,000	21,435
Excess (deficiency) of revenues over expenditures	(758,735)	463	759,198	1,541
Other financing sources (uses):				
Operating transfers in	231,000	-	(231,000)	-
Operating transfers out	(40,000)	(40,000)	-	-
Total other financing sources (uses)	191,000	(40,000)	(231,000)	-
Net change in fund balance	(567,735)	(39,537)	528,198	1,541
Fund balance:				
Beginning of year	567,735	357,965	(209,770)	356,424
End of year	$ -	$ 318,428	$ 318,428	$ 357,965

LINCOLN COUNTY, NEVADA
LINCOLN COUNTY LAND ACT EMERGENCY DISASTER (095)
INTERNALLY REPORTED (BUDGETARY BASIS) FUND REPORTED
AS PART OF THE GENERAL FUND FOR EXTERNAL REPORTING PURPOSES
COMPARATIVE BALANCE SHEETS
JUNE 30, 2021 AND 2020

	2021	2020
ASSETS		
Pooled cash and investments	$ 9,403	$ 9,386
Interest receivable	11	22
Total assets	$ 9,414	$ 9,408
LIABILITIES		
Accounts payable	$ -	$ -
FUND BALANCE		
Committed for land act	9,414	9,408
Total liabilities and fund balance	$ 9,414	$ 9,408

LINCOLN COUNTY, NEVADA
LINCOLN COUNTY LAND ACT EMERGENCY DISASTER (095)
INTERNALLY REPORTED (BUDGETARY BASIS) FUND REPORTED
AS PART OF THE GENERAL FUND FOR EXTERNAL REPORTING PURPOSES
SCHEDULE OF REVENUES, EXPENDITURES, AND CHANGES
IN FUND BALANCE - BUDGET (GAAP BASIS) AND ACTUAL
FOR THE YEAR ENDED JUNE 30, 2021
(With Comparative Actual Amounts for the Year Ended June 30, 2020)

	2021 Budget	2021 Actual	Variance - Positive (Negative)	2020 Actual
Revenues:				
Miscellaneous:				
Investment income	$ -	$ 6	$ 6	$ 357
Expenditures:				
Current:				
General government:				
Services and supplies	64,723	-	64,723	56,948
Excess (deficiency) of revenues over expenditures	(64,723)	6	64,729	(56,591)
Fund balance:				
Beginning of year	65,999	9,408	(56,591)	65,999
End of year	$ 1,276	$ 9,414	$ 8,138	$ 9,408

LINCOLN COUNTY, NEVADA
LINCOLN COUNTY WATER EMERGENCY DISASTER (088)
INTERNALLY REPORTED (BUDGETARY BASIS) FUND REPORTED
AS PART OF THE GENERAL FUND FOR EXTERNAL REPORTING PURPOSES
COMPARATIVE BALANCE SHEETS
JUNE 30, 2021 AND 2020

	2021	2020
ASSETS		
Pooled cash and investments	$ 66,466	$ 66,344
Interest receivable	76	107
Total assets	$ 66,542	$ 66,451
LIABILITIES		
Accounts payable	$ -	$ -
FUND BALANCE		
Committed for water	66,542	66,451
Total liabilities and fund balance	$ 66,542	$ 66,451

LINCOLN COUNTY, NEVADA
LINCOLN COUNTY WATER EMERGENCY DISASTER (088)
INTERNALLY REPORTED (BUDGETARY BASIS) FUND REPORTED
AS PART OF THE GENERAL FUND FOR EXTERNAL REPORTING PURPOSES
SCHEDULE OF REVENUES, EXPENDITURES, AND CHANGES
IN FUND BALANCE - BUDGET (GAAP BASIS) AND ACTUAL
FOR THE YEAR ENDED JUNE 30, 2021
(With Comparative Actual Amounts for the Year Ended June 30, 2020)

	2021 Budget	2021 Actual	Variance - Positive (Negative)	2020 Actual
Revenues:				
Miscellaneous:				
Investment income	$ 100	$ 91	$ (9)	$ 1,756
Expenditures:				
Current:				
General government:				
Services and supplies	63,642	-	63,642	-
Excess (deficiency) of revenues over expenditures	(63,542)	91	63,633	1,756
Fund balance:				
Beginning of year	64,795	66,451	1,656	64,695
End of year	$ 1,253	$ 66,542	$ 65,289	$ 66,451

LINCOLN COUNTY, NEVADA
NONMAJOR CAPITAL PROJECTS FUNDS
COMBINING BALANCE SHEET
JUNE 30, 2021
(With Comparative Totals for June 30, 2020)

	Capital Improvements	Pioche Town Grant	Pioche Town	Alamo Town	Panaca Town
ASSETS					
Pooled cash and investments	$ 13,585	$ 11,980	$ 59,143	$ 24,230	$ 25,912
Interest receivable	53	14	162	66	71
Taxes receivable	838	-	-	-	-
Special assessment receivable	-	-	-	-	-
Total assets	$ 14,476	$ 11,994	$ 59,305	$ 24,296	$ 25,983
LIABILITIES					
Accounts payable	$ -	$ -	$ -	$ -	$ -
DEFERRED INFLOWS OF RESOURCES					
Unavailable revenue - property taxes	704	-	-	-	-
FUND BALANCE					
Restricted for:					
Capital projects	13,772	11,994	59,305	24,296	25,983
Total liabilities, deferred inflows of resources, and fund balance	$ 14,476	$ 11,994	$ 59,305	$ 24,296	$ 25,983

Fair Board	Vehicle	Road Equipment	Airport	Lincoln County Land Act
$ 17,443	$ 13,872	$ 115,720	$ 3,140	$ 31,247
49	25	336	9	36
-	-	-	-	-
-	-	-	-	-
$ 17,492	$ 13,897	$ 116,056	$ 3,149	$ 31,283
$ 2,940	$ -	$ -	$ -	$ -
-	-	-	-	-
14,552	13,897	116,056	3,149	31,283
$ 17,492	$ 13,897	$ 116,056	$ 3,149	$ 31,283

LINCOLN COUNTY, NEVADA
NONMAJOR CAPITAL PROJECTS FUNDS
COMBINING BALANCE SHEET
JUNE 30, 2021
(With Comparative Totals for June 30, 2020)

	Lincoln County Water	Lincoln County Water District	Totals 2021	Totals 2020
ASSETS				
Pooled cash and investments	$ 82,565	$ 1,185,733	$ 1,584,570	$ 1,410,880
Interest receivable	95	4,249	5,165	4,871
Taxes receivable	-	-	838	1,555
Special assessment receivable	-	-	-	79,764
Total assets	$ 82,660	$ 1,189,982	$ 1,590,573	$ 1,497,070
LIABILITIES				
Accounts payable	$ -	$ -	$ 2,940	$ -
DEFERRED INFLOWS OF RESOURCES				
Unavailable revenue - property taxes	-	-	704	1,359
FUND BALANCE				
Restricted for:				
Capital projects	82,660	1,189,982	1,586,929	1,495,711
Total liabilities, deferred inflows of resources, and fund balance	$ 82,660	$ 1,189,982	$ 1,590,573	$ 1,497,070

LINCOLN COUNTY, NEVADA
NONMAJOR CAPITAL PROJECTS FUNDS
COMBINING SCHEDULE OF REVENUES, EXPENDITURES,
AND CHANGES IN FUND BALANCES
FOR THE YEAR ENDED JUNE 30, 2021
(With Comparative Actual Amounts for the Year Ended June 30, 2020)

	Capital Improvements	Pioche Town Grant	Pioche Town	Alamo Town	Panaca Town
Revenues:					
Taxes	$ 119,942	$ -	$ -	$ -	$ -
Intergovernmental	107	-	-	-	-
Special assessment	-	-	-	-	-
Miscellaneous	37	15	205	89	100
Total revenues	120,086	15	205	89	100
Expenditures:					
Current:					
Intergovernmental	8,408	-	-	-	-
Capital projects	-	-	-	-	2,325
Debt service:					
Principal	-	-	-	-	-
Interest	-	-	-	-	-
Total expenditures	8,408	-	-	-	2,325
Excess (deficiency) of revenues over expenditures	111,678	15	205	89	(2,225)
Other financing sources (uses):					
Operating transfers in	-	-	3,603	2,574	4,804
Operating transfers out	(98,997)	-	-	-	-
Sale of capital assets	-	-	-	-	-
Capital lease proceeds	-	-	-	-	-
Total other financing sources (uses)	(98,997)	-	3,603	2,574	4,804
Net change in fund balance before special items	12,681	15	3,808	2,663	2,579
Special items:					
Disposal of Ambulance	-	-	-	-	-
Net change in fund balance	12,681	15	3,808	2,663	2,579
Fund balance:					
Beginning of year	1,091	11,979	55,497	21,633	23,404
End of year	$ 13,772	$ 11,994	$ 59,305	$ 24,296	$ 25,983

Ambulance	Fair Board	Vehicle	Road Equipment	Airport	Lincoln County Land Act
$ -	$ -	$ -	$ -	$ -	$ -
-	-	-	-	-	-
-	-	-	-	-	-
21	39	37	418	9	43
21	39	37	418	9	43
-	-	-	-	-	-
-	2,940	-	277,800	-	-
-	-	75,283	-	-	-
-	-	7,628	-	-	-
-	2,940	82,911	277,800	-	-
21	(2,901)	(82,874)	(277,382)	9	43
5,000	-	88,016	100,000	-	-
-	-	-	-	-	-
-	-	8,500	-	-	-
-	-	-	-	-	-
5,000	-	96,516	100,000	-	-
5,021	(2,901)	13,642	(177,382)	9	43
(17,614)	-	-	-	-	-
(12,593)	(2,901)	13,642	(177,382)	9	43
12,593	17,453	255	293,438	3,140	31,240
$ -	$ 14,552	$ 13,897	$ 116,056	$ 3,149	$ 31,283

LINCOLN COUNTY, NEVADA
NONMAJOR CAPITAL PROJECTS FUNDS
COMBINING SCHEDULE OF REVENUES, EXPENDITURES,
AND CHANGES IN FUND BALANCES
FOR THE YEAR ENDED JUNE 30, 2021
(With Comparative Actual Amounts for the Year Ended June 30, 2020)

	Lincoln County Water	Lincoln County Water District	Totals 2021	Totals 2020
Revenues:				
Taxes	$ -	$ -	$ 119,942	$ 116,425
Intergovernmental	-	-	107	109
Special assessment	-	243,281	243,281	186,003
Miscellaneous	113	5,260	6,386	60,855
Total revenues	113	248,541	369,716	363,392
Expenditures:				
Current:				
Intergovernmental	-	-	8,408	8,169
Capital projects	-	-	283,065	148,804
Debt service:				
Principal	-	-	75,283	77,642
Interest	-	-	7,628	5,269
Total expenditures	-	-	374,384	239,884
Excess (deficiency) of revenues over expenditures	113	248,541	(4,668)	123,508
Other financing sources (uses):				
Operating transfers in	-	-	203,997	220,503
Operating transfers out	-	-	(98,997)	(120,503)
Sale of capital assets	-	-	8,500	-
Capital lease proceeds	-	-	-	100,300
Total other financing sources (uses)	-	-	113,500	200,300
Net change in fund balance before special items	113	248,541	108,832	323,808
Special items:				
Disposal of Ambulance	-	-	(17,614)	-
Net change in fund balance	113	248,541	91,218	323,808
Fund balance:				
Beginning of year	82,547	941,441	1,495,711	1,171,903
End of year	$ 82,660	$ 1,189,982	$ 1,586,929	$ 1,495,711

LINCOLN COUNTY, NEVADA
NONMAJOR CAPITAL IMPROVEMENTS CAPITAL PROJECTS FUND (013)
COMPARATIVE BALANCE SHEETS
JUNE 30, 2021 AND 2020

	2021	2020
ASSETS		
Pooled cash and investments	$ 13,585	$ 794
Interest receivable	53	101
Taxes receivable	838	1,555
Total assets	$ 14,476	$ 2,450
LIABILITIES		
Accounts payable	$ -	$ -
DEFERRED INFLOWS OF RESOURCES		
Unavailable revenue - property taxes	704	1,359
FUND BALANCE		
Restricted for capital projects	13,772	1,091
Total liabilities, deferred inflows of resources, and fund balance	$ 14,476	$ 2,450

LINCOLN COUNTY, NEVADA
NONMAJOR CAPITAL IMPROVEMENTS CAPITAL PROJECTS FUND (013)
SCHEDULE OF REVENUES, EXPENDITURES, AND CHANGES
IN FUND BALANCE - BUDGET (GAAP BASIS) AND ACTUAL
FOR THE YEAR ENDED JUNE 30, 2021
(With Comparative Actual Amounts for the Year Ended June 30, 2020)

	2021 Budget	2021 Actual	Variance - Positive (Negative)	2020 Actual
Revenues:				
Taxes:				
Property taxes	$ 119,577	$ 119,942	$ 365	$ 116,425
Intergovernmental:				
Fish and wildlife	-	107	107	109
Miscellaneous:				
Investment income	-	37	37	862
Total revenues	119,577	120,086	509	117,396
Expenditures:				
Current:				
Intergovernmental	19,135	8,408	10,727	8,169
Excess (deficiency) of revenues over expenditures	100,442	111,678	11,236	109,227
Other financing sources (uses) :				
Operating transfers out	(101,740)	(98,997)	2,743	(120,503)
Net change in fund balance	(1,298)	12,681	13,979	(11,276)
Fund balance:				
Beginning of year	1,298	1,091	(207)	12,367
End of year	$ -	$ 13,772	$ 13,772	$ 1,091

LINCOLN COUNTY, NEVADA
NONMAJOR PIOCHE TOWN GRANT CAPITAL PROJECTS FUND (035)
COMPARATIVE BALANCE SHEETS
JUNE 30, 2021 AND 2020

	2021	2020
ASSETS		
Pooled cash and investments	$ 11,980	$ 11,958
Interest receivable	14	21
Total assets	$ 11,994	$ 11,979
LIABILITIES		
Accounts payable	$ -	$ -
FUND BALANCE		
Restricted for capital projects	11,994	11,979
Total liabilities and fund balance	$ 11,994	$ 11,979

LINCOLN COUNTY, NEVADA
NONMAJOR PIOCHE TOWN GRANT CAPITAL PROJECTS FUND (035)
SCHEDULE OF REVENUES, EXPENDITURES, AND CHANGES
IN FUND BALANCE - BUDGET (GAAP BASIS) AND ACTUAL
FOR THE YEAR ENDED JUNE 30, 2021
(With Comparative Actual Amounts for the Year Ended June 30, 2020)

	2021		Variance - Positive	2020
	Budget	Actual	(Negative)	Actual
Revenues:				
Miscellaneous:				
Investment income	$ -	$ 15	$ 15	$ 345
Expenditures:				
Current:				
Capital projects:				
Capital outlay	13,800	-	13,800	2,650
Excess (deficiency) of revenues over expenditures	(13,800)	15	13,815	(2,305)
Fund balance:				
Beginning of year	13,800	11,979	(1,821)	14,284
End of year	$ -	$ 11,994	$ 11,994	$ 11,979

LINCOLN COUNTY, NEVADA
NONMAJOR PIOCHE TOWN CAPITAL PROJECTS FUND (056)
COMPARATIVE BALANCE SHEETS
JUNE 30, 2021 AND 2020

	2021	2020
ASSETS		
Pooled cash and investments	$ 59,143	$ 55,280
Interest receivable	162	217
Total assets	$ 59,305	$ 55,497
LIABILITIES		
Accounts payable	$ -	$ -
FUND BALANCE		
Restricted for capital projects	59,305	55,497
Total liabilities and fund balance	$ 59,305	$ 55,497

LINCOLN COUNTY, NEVADA
NONMAJOR PIOCHE TOWN CAPITAL PROJECTS FUND (056)
SCHEDULE OF REVENUES, EXPENDITURES, AND CHANGES IN FUND BALANCE - BUDGET (GAAP BASIS) AND ACTUAL
FOR THE YEAR ENDED JUNE 30, 2021
(With Comparative Actual Amounts for the Year Ended June 30, 2020)

	2021 Budget	2021 Actual	Variance - Positive (Negative)	2020 Actual
Revenues:				
Miscellaneous:				
Investment income	$ -	$ 205	$ 205	$ 1,826
Expenditures:				
Current:				
Capital projects:				
Capital outlay	53,000	-	53,000	3,752
Excess (deficiency) of revenues over expenditures	(53,000)	205	53,205	(1,926)
Other financing sources (uses):				
Operating transfers in	5,664	3,603	(2,061)	3,502
Net change in fund balance	(47,336)	3,808	51,144	1,576
Fund balance:				
Beginning of year	57,577	55,497	(2,080)	53,921
End of year	$ 10,241	$ 59,305	$ 49,064	$ 55,497

LINCOLN COUNTY, NEVADA
NONMAJOR ALAMO TOWN CAPITAL PROJECTS FUND (054)
COMPARATIVE BALANCE SHEETS
JUNE 30, 2021 AND 2020

	2021	2020
ASSETS		
Pooled cash and investments	$ 24,230	$ 21,551
Interest receivable	66	82
Total assets	$ 24,296	$ 21,633
LIABILITIES		
Accounts payable	$ -	$ -
FUND BALANCE		
Restricted for capital projects	24,296	21,633
Total liabilities and fund balance	$ 24,296	$ 21,633

LINCOLN COUNTY, NEVADA
NONMAJOR ALAMO TOWN CAPITAL PROJECTS FUND (054)
SCHEDULE OF REVENUES, EXPENDITURES, AND CHANGES IN FUND BALANCE - BUDGET (GAAP BASIS) AND ACTUAL
FOR THE YEAR ENDED JUNE 30, 2021
(With Comparative Actual Amounts for the Year Ended June 30, 2020)

	2021 Budget	2021 Actual	Variance - Positive (Negative)	2020 Actual
Revenues:				
Miscellaneous:				
Investment income	$ 100	$ 89	$ (11)	$ 690
Expenditures:				
Current:				
Capital projects:				
Capital outlay	23,587	-	23,587	-
Excess (deficiency) of revenues over expenditures	(23,487)	89	23,576	690
Other financing sources (uses):				
Operating transfers in	2,391	2,574	183	2,334
Net change in fund balance	(21,096)	2,663	23,759	3,024
Fund balance:				
Beginning of year	21,096	21,633	537	18,609
End of year	$ -	$ 24,296	$ 24,296	$ 21,633

LINCOLN COUNTY, NEVADA
NONMAJOR PANACA TOWN CAPITAL PROJECTS FUND (055)
COMPARATIVE BALANCE SHEETS
JUNE 30, 2021 AND 2020

	2021	2020
ASSETS		
Pooled cash and investments	$ 25,912	$ 23,319
Interest receivable	71	85
Total assets	$ 25,983	$ 23,404
LIABILITIES		
Accounts payable	$ -	$ -
FUND BALANCE		
Restricted for capital projects	25,983	23,404
Total liabilities and fund balance	$ 25,983	$ 23,404

LINCOLN COUNTY, NEVADA
NONMAJOR PANACA TOWN CAPITAL PROJECTS FUND (055)
SCHEDULE OF REVENUES, EXPENDITURES, AND CHANGES IN FUND BALANCE - BUDGET (GAAP BASIS) AND ACTUAL
FOR THE YEAR ENDED JUNE 30, 2021
(With Comparative Actual Amounts for the Year Ended June 30, 2020)

	2021 Budget	2021 Actual	Variance - Positive (Negative)	2020 Actual
Revenues:				
Miscellaneous:				
Investment income	$ 10	$ 100	$ 90	$ 716
Donation	-	-	-	3,000
Total revenues	10	100	90	3,716
Expenditures:				
Current:				
Capital projects:				
Capital outlay	22,000	2,325	19,675	-
Excess (deficiency) of revenues over expenditures	(21,990)	(2,225)	19,765	3,716
Other financing sources (uses):				
Operating transfers in	4,783	4,804	21	4,667
Net change in fund balance	(17,207)	2,579	19,786	8,383
Fund balance:				
Beginning of year	17,207	23,404	6,197	15,021
End of year	$ -	$ 25,983	$ 25,983	$ 23,404

LINCOLN COUNTY, NEVADA
NONMAJOR AMBULANCE CAPITAL PROJECTS FUND (068)
COMPARATIVE BALANCE SHEETS
JUNE 30, 2021 AND 2020

	2021	2020
ASSETS		
Pooled cash and investments	$ -	$ 12,544
Interest receivable	-	49
Total assets	$ -	$ 12,593
LIABILITIES		
Accounts payable	$ -	$ -
FUND BALANCE		
Restricted for capital projects	-	12,593
Total liabilities and fund balance	$ -	$ 12,593

LINCOLN COUNTY, NEVADA
NONMAJOR AMBULANCE CAPITAL PROJECTS FUND (068)
SCHEDULE OF REVENUES, EXPENDITURES, AND CHANGES IN FUND BALANCE - BUDGET (GAAP BASIS) AND ACTUAL
FOR THE YEAR ENDED JUNE 30, 2021
(With Comparative Actual Amounts for the Year Ended June 30, 2020)

	2021 Budget	2021 Actual	Variance-Positive (Negative)	2020 Actual
Miscellaneous:				
Investment income	$ -	$ 21	$ 21	$ 412
Expenditures:				
Current:				
Capital projects:				
Capital outlay	17,181	-	17,181	-
Excess (deficiency) of revenues over expenditures	(17,181)	21	17,202	412
Other financing sources (uses):				
Operating transfers in	5,000	5,000	-	-
Net change in fund balance before special items	(12,181)	5,021	17,202	412
Special items:				
Disposal	-	(17,614)	(17,614)	-
Net change in fund balance	(12,181)	(12,593)	(412)	412
Fund balance:				
Beginning of year	12,181	12,593	412	12,181
End of year	$ -	$ -	$ -	$ 12,593

LINCOLN COUNTY, NEVADA
NONMAJOR FAIR BOARD CAPITAL PROJECTS FUND (045)
COMPARATIVE BALANCE SHEETS
JUNE 30, 2021 AND 2020

	2021	2020
ASSETS		
Pooled cash and investments	$ 17,443	$ 17,365
Interest receivable	49	88
Total assets	$ 17,492	$ 17,453
LIABILITIES		
Accounts payable	$ 2,940	$ -
FUND BALANCE		
Restricted for capital projects	14,552	17,453
Total liabilities and fund balance	$ 17,492	$ 17,453

LINCOLN COUNTY, NEVADA
NONMAJOR FAIR BOARD CAPITAL PROJECTS FUND (045)
SCHEDULE OF REVENUES, EXPENDITURES, AND CHANGES
IN FUND BALANCE - BUDGET (GAAP BASIS) AND ACTUAL
FOR THE YEAR ENDED JUNE 30, 2021
(With Comparative Actual Amounts for the Year Ended June 30, 2020)

	2021 Budget	2021 Actual	Variance - Positive (Negative)	2020 Actual
Revenues:				
Miscellaneous:				
Investment income	$ 500	$ 39	$ (461)	$ 738
Expenditures:				
Current:				
Capital projects:				
Services and supplies	-	2,940	(2,940)	2,285
Capital outlay	25,000	-	25,000	5,000
Total expenditures	25,000	2,940	22,060	7,285
Excess (deficiency) of revenues over expenditures	(24,500)	(2,901)	21,599	(6,547)
Fund balance:				
Beginning of year	24,500	17,453	(7,047)	24,000
End of year	$ -	$ 14,552	$ 14,552	$ 17,453

LINCOLN COUNTY, NEVADA
NONMAJOR VEHICLE CAPITAL PROJECTS FUND (042)
COMPARATIVE BALANCE SHEETS
JUNE 30, 2021 AND 2020

	2021	2020
ASSETS		
Pooled cash and investments	$ 13,872	$ 227
Interest receivable	25	28
Total assets	$ 13,897	$ 255
LIABILITIES		
Accounts payable	$ -	$ -
FUND BALANCE		
Restricted for capital projects	13,897	255
Total liabilities and fund balance	$ 13,897	$ 255

LINCOLN COUNTY, NEVADA
NONMAJOR VEHICLE CAPITAL PROJECTS FUND (042)
SCHEDULE OF REVENUES, EXPENDITURES, AND CHANGES IN FUND BALANCE - BUDGET (GAAP BASIS) AND ACTUAL
FOR THE YEAR ENDED JUNE 30, 2021
(With Comparative Actual Amounts for the Year Ended June 30, 2020)

	2021 Budget	2021 Actual	Variance - Positive (Negative)	2020 Actual
Revenues:				
Miscellaneous:				
Investment income	$ -	$ 37	$ 37	$ 232
Expenditures:				
Current:				
Capital projects:				
Capital outlay	-	-	-	135,117
Debt service:				
Principal	75,283	75,283	-	77,642
Interest	7,689	7,628	61	5,269
Total debt service	82,972	82,911	61	82,911
Total expenditures	82,972	82,911	61	218,028
Excess (deficiency) of revenues over expenditures	(82,972)	(82,874)	98	(217,796)
Other financing sources (uses):				
Operating transfers in	101,740	88,016	(13,724)	110,000
Sale of capital assets	15,000	8,500	(6,500)	-
Capital lease proceeds	-	-	-	100,300
Total other financing sources (uses)	116,740	96,516	(20,224)	210,300
Net change in fund balance	33,768	13,642	(20,126)	(7,496)
Fund balance:				
Beginning of year	10,549	255	(10,294)	7,751
End of year	$ 44,317	$ 13,897	$ (30,420)	$ 255

LINCOLN COUNTY, NEVADA
NONMAJOR ROAD EQUIPMENT CAPITAL PROJECTS FUND (028)
COMPARATIVE BALANCE SHEETS
JUNE 30, 2021 AND 2020

	2021	2020
ASSETS		
Pooled cash and investments	$ 115,720	$ 292,983
Interest receivable	336	455
Total assets	$ 116,056	$ 293,438
LIABILITIES		
Accounts payable	$ -	$ -
FUND BALANCE		
Restricted for capital projects	116,056	293,438
Total fund balance	$ 116,056	$ 293,438

LINCOLN COUNTY, NEVADA
NONMAJOR ROAD EQUIPMENT CAPITAL PROJECTS FUND (028)
SCHEDULE OF REVENUES, EXPENDITURES, AND CHANGES
IN FUND BALANCE - BUDGET (GAAP BASIS) AND ACTUAL
FOR THE YEAR ENDED JUNE 30, 2021
(With Comparative Actual Amounts for the Year Ended June 30, 2020)

	2021			
	Budget	Actual	Variance - Positive (Negative)	2020 Actual
Revenues:				
Miscellaneous:				
Investment income	$ -	$ 418	$ 418	$ 7,447
Expenditures:				
Current:				
Capital projects:				
Capital outlay	300,000	277,800	22,200	-
Excess (deficiency) of revenues over expenditures	(300,000)	(277,382)	22,618	7,447
Other financing sources (uses):				
Operating transfers in	100,000	100,000	-	100,000
Net change in fund balance	(200,000)	(177,382)	22,618	107,447
Fund balance:				
Beginning of year	285,991	293,438	7,447	185,991
End of year	$ 85,991	$ 116,056	$ 30,065	$ 293,438

LINCOLN COUNTY, NEVADA
NONMAJOR AIRPORT CAPITAL PROJECTS FUND (027)
COMPARATIVE BALANCE SHEETS
JUNE 30, 2021 AND 2020

	2021	2020
ASSETS		
Pooled cash and investments	$ 3,140	$ 3,126
Interest receivable	9	14
Total assets	$ 3,149	$ 3,140
LIABILITIES		
Accounts payable	$ -	$ -
FUND BALANCE		
Restricted for capital projects	3,149	3,140
Total liabilities and fund balance	$ 3,149	$ 3,140

LINCOLN COUNTY, NEVADA
NONMAJOR AIRPORT CAPITAL PROJECTS FUND (027)
SCHEDULE OF REVENUES, EXPENDITURES, AND CHANGES IN FUND BALANCE - BUDGET (GAAP BASIS) AND ACTUAL
FOR THE YEAR ENDED JUNE 30, 2021
(With Comparative Actual Amounts for the Year Ended June 30, 2020)

	2021 Budget	2021 Actual	Variance - Positive (Negative)	2020 Actual
Revenues				
Miscellaneous:				
Investment income	$ -	$ 9	$ 9	$ 121
Expenditures:				
Curent:				
Capital projects:				
Capital outlay	2,900	-	2,900	-
Excess (deficiency) of revenues over expenditures	(2,900)	9	2,909	121
Fund balance:				
Beginning of year	3,019	3,140	121	3,019
End of year	$ 119	$ 3,149	$ 3,030	$ 3,140

LINCOLN COUNTY, NEVADA
NONMAJOR LINCOLN COUNTY LAND ACT CAPITAL PROJECTS FUND (092)
COMPARATIVE BALANCE SHEETS
JUNE 30, 2021 AND 2020

	2021	2020
ASSETS		
Pooled cash and investments	$ 31,247	$ 31,190
Interest receivable	36	50
Total assets	$ 31,283	$ 31,240
LIABILITIES		
Accounts payable	$ -	$ -
FUND BALANCE		
Restricted for capital projects	31,283	31,240
Total liabilities and fund balance	$ 31,283	$ 31,240

LINCOLN COUNTY, NEVADA
NONMAJOR LINCOLN COUNTY LAND ACT CAPITAL PROJECTS FUND (092)
SCHEDULE OF REVENUES, EXPENDITURES, AND CHANGES
IN FUND BALANCE - BUDGET (GAAP BASIS) AND ACTUAL
FOR THE YEAR ENDED JUNE 30, 2021
(With Comparative Actual Amounts for the Year Ended June 30, 2020)

	2021			
	Budget	Actual	Variance - Positive (Negative)	2020 Actual
Revenues:				
Miscellaneous:				
Investment income	$ -	$ 43	$ 43	$ 825
Expenditures:				
Current:				
Capital projects:				
Capital outlay	30,415	-	30,415	-
Excess (deficiency) of revenues over expenditures	(30,415)	43	30,458	825
Fund balance:				
Beginning of year	30,415	31,240	825	30,415
End of year	$ -	$ 31,283	$ 31,283	$ 31,240

LINCOLN COUNTY, NEVADA
NONMAJOR LINCOLN COUNTY WATER CAPITAL PROJECTS FUND (085)
COMPARATIVE BALANCE SHEETS
JUNE 30, 2021 AND 2020

	2021	2020
ASSETS		
Pooled cash and investments	$ 82,565	$ 82,414
Interest receivable	95	133
Total assets	$ 82,660	$ 82,547
LIABILITIES		
Accounts payable	$ -	$ -
FUND BALANCE		
Restricted for capital projects	82,660	82,547
Total liabilities and fund balance	$ 82,660	$ 82,547

LINCOLN COUNTY, NEVADA
NONMAJOR LINCOLN COUNTY WATER CAPITAL PROJECTS FUND (085)
SCHEDULE OF REVENUES, EXPENDITURES, AND CHANGES
IN FUND BALANCE - BUDGET (GAAP BASIS) AND ACTUAL
FOR THE YEAR ENDED JUNE 30, 2021
(With Comparative Actual Amounts for the Year Ended June 30, 2020)

	2021 Budget	2021 Actual	Variance - Positive (Negative)	2020 Actual
Revenues:				
Miscellaneous:				
Investment income	$ -	$ 113	$ 113	$ 2,182
Expenditures:				
Current:				
Capital projects:				
Capital outlay	80,365	-	80,365	-
Excess (deficiency) of revenues over expenditures	(80,365)	113	80,478	2,182
Fund balance:				
Beginning of year	80,365	82,547	2,182	80,365
End of year	$ -	$ 82,660	$ 82,660	$ 82,547

LINCOLN COUNTY, NEVADA
NONMAJOR LINCOLN COUNTY WATER DISTRICT CAPITAL PROJECTS FUND (099)
COMPARATIVE BALANCE SHEETS
JUNE 30, 2021 AND 2020

	2021	2020
ASSETS		
Pooled cash and investments	$ 1,185,733	$ 858,129
Interest receivable	4,249	3,548
Special assessment receivable	-	79,764
Total assets	$ 1,189,982	$ 941,441
LIABILITIES		
Accounts payable	$ -	$ -
FUND BALANCE		
Restricted for capital projects	1,189,982	941,441
Total liabilities and fund balance	$ 1,189,982	$ 941,441

LINCOLN COUNTY, NEVADA
NONMAJOR LINCOLN COUNTY WATER DISTRICT CAPITAL PROJECTS FUND (099)
SCHEDULE OF REVENUES, EXPENDITURES, AND CHANGES
IN FUND BALANCE - BUDGET (GAAP BASIS) AND ACTUAL
FOR THE YEAR ENDED JUNE 30, 2021
(With Comparative Actual Amounts for the Year Ended June 30, 2020)

	2021		Variance - Positive	2020
	Budget	Actual	(Negative)	Actual
Revenues:				
Special assessment:				
Capital improvement	$ -	$ 243,281	$ 243,281	$ 186,003
Miscellaneous:				
Investment income	7,500	5,260	(2,240)	41,459
Total revenues	7,500	248,541	241,041	227,462
Expenditures:				
Current:				
Capital projects:				
Capital outlay	728,979	-	728,979	-
Excess (deficiency) of revenues over expenditures	(721,479)	248,541	970,020	227,462
Fund balance:				
Beginning of year	721,479	941,441	219,962	713,979
End of year	$ -	$ 1,189,982	$ 1,189,982	$ 941,441

LINCOLN COUNTY, NEVADA
NONMAJOR ENTERPRISE FUNDS
COMBINING STATEMENT OF NET POSITION
JUNE 30, 2021
With Comparative Total for June 30, 2020

	Pioche Public Water Utility	Pioche Public Sewer Utility	Building Department
ASSETS			
Current assets:			
Pooled cash and investments	$ 355,417	$ 409,800	$ 44,454
Accounts receivable	23,651	9,694	-
Interest receivable	132	175	26
Total current assets	379,200	419,669	44,480
Restricted assets:			
Cash	-	11,490	-
Capital assets:			
Land	4,000	10,000	-
Property, plant and equipment (net of depreciation)	459,542	509,523	-
Total capital assets	463,542	519,523	-
Total assets	842,742	950,682	44,480
DEFERRED OUTFLOWS OF RESOURCES			
Deferred net pension charge	14,861	6,505	15,255
Deferred total OPEB	2,864	2,864	-
Total deferred outflows of resources	17,725	9,369	15,255
LIABILITIES			
Current liabilities:			
Accounts payable	10,370	861	462
Accrued payroll and benefits	10,651	1,941	6,212
Customer deposits	60	-	-
Accrued compensated absences	6,779	4,519	4,934
Accrued interest payable	-	1,263	-
Total current liabilities	27,860	8,584	11,608
Current liabilities payable from restricted assets:			
Revenue bond	-	3,592	-
Non-current liabilities:			
Accrued compensated absences	5,546	3,697	4,040
Net pension liability	82,689	42,970	92,432
Total OPEB liability	57,065	57,066	-
Revenue bond	-	170,457	-
Total non-current liabilities	145,300	274,190	96,472
Total liabilities	173,160	286,366	108,080
DEFERRED INFLOWS OF RESOURCES			
Deferred net pension charge	13,734	5,981	18,336
NET POSITION			
Invested in capital assets, net of related debt	463,542	345,474	-
Restricted for revenue bond debt service	-	11,490	-
Unrestricted	210,031	310,740	(66,681)
Total net position	$ 673,573	$ 667,704	$ (66,681)

Totals	
2021	2020
$ 809,671	$ 740,043
33,345	33,895
333	851
843,349	774,789
11,490	11,490
14,000	14,000
969,065	990,869
983,065	1,004,869
1,837,904	1,791,148
36,621	36,268
5,728	5,728
42,349	41,996
11,693	16,138
18,804	15,390
60	90
16,232	16,509
1,263	1,288
48,052	49,415
3,592	3,440
13,283	13,912
218,091	225,080
114,131	114,906
170,457	174,049
515,962	527,947
567,606	580,802
38,051	36,072
809,016	827,380
11,490	11,490
454,090	377,400
$ 1,274,596	$ 1,216,270

LINCOLN COUNTY, NEVADA
NONMAJOR ENTERPRISE FUNDS
COMBINING SCHEDULE OF REVENUES, EXPENSES, AND CHANGES IN NET POSITION
FOR THE YEAR ENDED JUNE 30, 2021
With Comparative Total for the Year Ended June 30, 2020

	Pioche Public Water Utility	Pioche Public Sewer Utility	Pioche Public Electric Utility
Operating revenues:			
Charges for services	$ 243,254	$ 109,743	$ -
Operating expenses:			
Salaries and wages	83,122	38,573	-
Employee benefits	39,378	19,696	-
Services and supplies	98,018	17,185	-
Depreciation	25,690	19,749	-
Total operating expenses	246,208	95,203	-
Operating income (loss)	(2,954)	14,540	-
Non-operating revenues (expenses):			
Investment income	154	211	4
Operating transfers in	102,855	102,855	
Operating transfers out	-	-	(205,710)
Capital fees	24,546	6,812	-
Custom fees	-	-	-
Interest expense	-	(7,703)	-
Total non-operating revenues (expenses)	127,555	102,175	(205,706)
Change in net position before special items	124,601	116,715	(205,706)
Special items:			
Sale of electric operations:			
Loss on disposal of assets	-	-	-
Gain on net pension liabilites	-	-	-
Loss on Total OPEB liability	-	-	-
Total special items	-	-	-
Change in net position	124,601	116,715	(205,706)
Net Position:			
Beginning of year	548,972	550,989	205,706
End of year	$ 673,573	$ 667,704	$ -

Building Department	Totals 2021	2020
$ 35,917	$ 388,914	$ 580,396
33,774	155,469	166,118
26,963	86,037	119,389
2,503	117,706	345,985
-	45,439	41,970
63,240	404,651	673,462
(27,323)	(15,737)	(93,066)
39	408	13,923
50,000	255,710	50,000
-	(205,710)	-
-	31,358	56,612
-	-	11,075
-	(7,703)	(9,159)
50,039	74,063	122,451
22,716	58,326	29,385
-	-	(349,430)
-	-	125,407
-	-	148
-	-	(223,875)
22,716	58,326	(194,490)
(89,397)	1,216,270	1,410,760
$ (66,681)	$ 1,274,596	$ 1,216,270

LINCOLN COUNTY, NEVADA
NONMAJOR ENTERPRISE FUNDS
COMBINING STATEMENT OF CASH FLOWS
FOR THE YEAR ENDED JUNE 30, 2021
With Comparative Total for the Year Ended June 30, 2020

	Pioche Public Water Utility	Pioche Public Sewer Utility
Cash flows from operating activities:		
Cash received from customers	$ 240,599	$ 112,918
Cash paid for services and supplies	(102,257)	(17,592)
Cash paid for salaries and benefits	(121,796)	(61,996)
Net cash provided (used) by operating activities	16,546	33,330
Cash flows from noncapital financing activities:		
Operating transfers in/out	102,855	102,855
Cash flows from capital and related financing activities:		
Purchases of capital assets	(23,635)	-
Capital fees	24,546	6,812
Custom fees	-	-
Debt retirement	-	(3,440)
Interest paid	-	(7,728)
Net cash provided (used) by capital and related financing activities	911	(4,356)
Cash flows from investing activities:		
Investment income	210	278
Net change in cash and cash equivalents	120,522	132,107
Cash:		
Beginning of year	234,895	289,183
End of year	$ 355,417	$ 421,290
Reconciliation of operating income (loss) to net cash provided (used) by operating activities:		
Operating income (loss)	$ (2,954)	$ 14,540
Adjustments to reconcile operating income (loss) to net cash provided (used) by operating activities:		
Depreciation expense	25,690	19,749
(Increase) decrease in accounts receivable	(2,625)	3,175
(Increase) decrease in deferred outflows pension charge	(3,294)	(905)
(Increase) decrease in deferred outflows opeb	-	-
Increase (decrease) in accounts payable	(4,239)	(407)
Increase (decrease) in accrued payroll and benefits	5,425	(1,247)
Increase (decrease) in compensated absences	(753)	(502)
Increase (decrease) in net pension liability	(3,754)	(1,179)
Increase (decrease) in deferred inflows pension charge	3,468	493
Increase (decrease) in total OPEB liability	(388)	(387)
Increase (decrease) in customer deposits	(30)	-
Loss on special items	-	-
Total adjustments	19,500	18,790
Net cash provided (used) by operating activities	$ 16,546	$ 33,330

Pioche Public Electric Utility	Building Department	Totals 2021	2020
$ -	$ 35,917	$ 389,434	$ 623,966
-	(2,302)	(122,151)	(369,504)
(1,127)	(60,217)	(245,136)	(428,924)
(1,127)	(26,602)	22,147	(174,462)
(205,710)	50,000	50,000	50,000
-	-	(23,635)	(11,775)
-	-	31,358	56,612
-	-	-	11,075
-	-	(3,440)	(10,630)
-	-	(7,728)	(9,183)
-	-	(3,445)	36,099
396	42	926	13,830
(206,441)	23,440	69,628	(74,533)
206,441	21,014	751,533	826,066
$ -	$ 44,454	$ 821,161	$ 751,533
$ -	$ (27,323)	$ (15,737)	$ (93,066)
-	-	45,439	41,970
-	-	550	51,600
-	3,846	(353)	22,838
-	-	-	(442)
-	201	(4,445)	(23,519)
(1,127)	363	3,414	(4,415)
-	349	(906)	(5,888)
-	(2,056)	(6,989)	(142,540)
-	(1,982)	1,979	(4,098)
-	-	(775)	21,209
-	-	(30)	(8,030)
-	-	-	(30,081)
(1,127)	721	37,884	(81,396)
$ (1,127)	$ (26,602)	$ 22,147	$ (174,462)

LINCOLN COUNTY, NEVADA
NONMAJOR PIOCHE PUBLIC UTILITY WATER ENTERPRISE FUND (115, 117, 132)
COMPARATIVE STATEMENT OF NET POSITION
JUNE 30, 2021 AND 2020

	2021	2020
ASSETS		
Current assets:		
Pooled cash and investments	$ 355,417	$ 234,895
Accounts receivable	23,651	21,026
Interest receivable	132	188
Total current assets	379,200	256,109
Capital assets:		
Land	4,000	4,000
Property, plant and equipment (net of depreciation)	459,542	461,597
Total capital assets	463,542	465,597
Total assets	842,742	721,706
DEFERRED OUTFLOWS OF RESOURCES		
Deferred net pension charge	14,861	11,567
Deferred total OPEB	2,864	2,864
Total deferred outflows of resources	17,725	14,431
LIABILITIES		
Current liabilities:		
Accounts payable	10,370	14,609
Accrued payroll and benefits	10,651	5,226
Customer deposits	60	90
Accrued compensated absences	6,779	6,801
Total current liabilities	27,860	26,726
Non-current liabilities:		
Accrued compensated absences	5,546	6,277
Net pension liability	82,689	86,443
Total OPEB liability	57,065	57,453
Total non-current liabilities	145,300	150,173
Total liabilities	173,160	176,899
DEFERRED INFLOWS OF RESOURCES		
Deferred net pension charge	13,734	10,266
NET POSITION		
Invested in capital assets, net of related debt	463,542	465,597
Unrestricted	210,031	83,375
Total net position	$ 673,573	$ 548,972

LINCOLN COUNTY, NEVADA
NONMAJOR PIOCHE PUBLIC UTILITY WATER ENTERPRISE FUND (115, 117, 132)
SCHEDULE OF REVENUES, EXPENSES, AND CHANGES IN NET POSITION -
BUDGET (GAAP BASIS) AND ACTUAL
FOR THE YEAR ENDED JUNE 30, 2021
(With Comparative Actual Amounts for the Year Ended June 30, 2020)

	2021 Budget	2021 Actual	Variance-Positive (Negative)	2020 Actual
Operating revenues:				
Water	$ 199,500	$ 243,254	$ 43,754	$ 191,261
Operating expenses:				
Water:				
Salaries and wages	79,756	83,122	(3,366)	57,916
Employee benefits	42,212	39,378	2,834	40,331
Services and supplies	98,850	98,018	832	79,332
Depreciation	32,000	25,690	6,310	22,937
Total operating expenses	252,818	246,208	6,610	200,516
Operating income (loss)	(53,318)	(2,954)	50,364	(9,255)
Non-operating revenues (expenses):				
Investment income	-	154	154	3,082
Operating transfer in	-	102,855	102,855	-
Water capital fees	34,000	24,546	(9,454)	21,607
Water custom fees	5,000	-	(5,000)	9,209
Interest expense	-	-	-	(1,309)
Total non-operating revenues (expenses)	39,000	127,555	88,555	32,589
Income (loss) before special and extraordinary items	(14,318)	124,601	138,919	23,334
Special and extraordinary items:				
Sale of electric operations:				
Capital asset transfers in	-	-	-	2,320
Loss on total OPEB liability	-	-	-	(14,661)
Total extraordinary items	-	-	-	(12,341)
Change in net position	$ (14,318)	124,601	$ 138,919	10,993
Net Position:				
Beginning balance		548,972		537,979
End of year		$ 673,573		$ 548,972

LINCOLN COUNTY, NEVADA
NONMAJOR PIOCHE PUBLIC UTILITY WATER ENTERPRISE FUND (115, 117, 132)
COMPARATIVE STATEMENT OF CASH FLOWS
JUNE 30, 2021 AND 2020

	2021	2020
Cash flows from operating activities:		
Cash received from customers	$ 240,599	$ 189,923
Cash paid for services and supplies	(102,257)	(70,366)
Cash paid for salaries and benefits	(121,796)	(83,456)
Net cash provided (used) by operating activities	16,546	36,101
Cash flows from noncapital financing activities		
Operating transfers in	102,855	-
Cash flows from capital and related financing activities:		
Purchases of capital assets	(23,635)	(11,775)
Capital fees	24,546	21,607
Custom fees	-	9,209
Debt retirement	-	(7,336)
Interest paid	-	(1,309)
Net cash provided (used) by capital and related financing activities	911	10,396
Cash flows from investing activities:		
Investment income	210	3,079
Net change in cash and cash equivalents	120,522	49,576
Cash:		
Beginning of year	234,895	185,319
End of year	$ 355,417	$ 234,895
Reconciliation of operating income (loss) to net cash provided (used) by operating activities:		
Operating income (loss)	$ (2,954)	$ (9,255)
Adjustments to reconcile operating income (loss) to net cash provided (used) by operating activities:		
Depreciation expense	25,690	22,937
(Increase) decrease in accounts receivable	(2,625)	(1,338)
(Increase) decrease in deferred outflows pension charge	(3,294)	111
(Increase) decrease in deferred outflows OPEB	-	(1,102)
Increase (decrease) in accounts payable	(4,239)	8,966
Increase (decrease) in accrued payroll and benefits	5,425	169
Increase (decrease) in compensated absences	(753)	4,952
Increase (decrease) in net pension liability	(3,754)	(2,933)
Increase (decrease) in deferred inflows pension charge	3,468	2,034
Increase (decrease) in total OPEB liability	(388)	26,221
Increase (decrease) in customer deposits	(30)	-
Loss on special items	-	(14,661)
Total adjustments	19,500	45,356
Net cash provided (used) by operating activities	$ 16,546	$ 36,101

LINCOLN COUNTY, NEVADA
NONMAJOR PIOCHE PUBLIC UTILITY SEWER ENTERPRISE FUND (019, 036, 119, 131)
COMPARATIVE STATEMENT OF NET POSITION
JUNE 30, 2021 AND 2020

	2021	2020
ASSETS		
Current assets:		
Pooled cash and investments	$ 409,800	$ 277,693
Accounts receivable	9,694	12,869
Interest receivable	175	242
Total current assets	419,669	290,804
Restricted assets:		
Cash	11,490	11,490
Capital assets:		
Land	10,000	10,000
Property, plant and equipment (net of depreciation)	509,523	529,272
Total capital assets	519,523	539,272
Total assets	950,682	841,566
DEFERRED OUTFLOWS OF RESOURCES		
Deferred net pension charge	6,505	5,600
Deferred total OPEB	2,864	2,864
Total deferred outflows of resources	9,369	8,464
LIABILITIES		
Current liabilities:		
Accounts payable	861	1,268
Accrued payroll and benefits	1,941	3,188
Accrued compensated absences	4,519	4,533
Accrued interest payable	1,263	1,288
Total current liabilities	8,584	10,277
Current liabilities payable from restricted assets:		
Revenue bond	3,592	3,440
Non-current liabilities:		
Accrued compensated absences	3,697	4,185
Net pension liability	42,970	44,149
Total OPEB liability	57,066	57,453
Revenue bond	170,457	174,049
Total non-current liabilities	274,190	279,836
Total liabilities	286,366	293,553
DEFERRED INFLOWS OF RESOURCES		
Deferred net pension charge	5,981	5,488
NET POSITION		
Invested in capital assets, net of related debt	345,474	361,783
Restricted for revenue bond debt service	11,490	11,490
Unrestricted	310,740	177,716
Total net position	$ 667,704	$ 550,989

LINCOLN COUNTY, NEVADA
NONMAJOR PIOCHE PUBLIC UTILITY SEWER ENTERPRISE FUND (019, 036, 119, 131)
SCHEDULE OF REVENUES, EXPENSES, AND CHANGES IN NET POSITION -
BUDGET (GAAP BASIS) AND ACTUAL
FOR THE YEAR ENDED JUNE 30, 2021
(With Comparative Actual Amounts for the Year Ended June 30, 2020)

	2021 Budget	2021 Actual	Variance-Positive (Negative)	2020 Actual
Operating revenues:				
Sewer	$ 90,500	$ 109,743	$ 19,243	$ 106,758
Operating expenses:				
Sewer:				
Salaries and wages	43,183	38,573	4,610	26,810
Employee benefits	19,710	19,696	14	24,526
Services and supplies	24,287	17,185	7,102	23,498
Depreciation	27,000	19,749	7,251	18,557
Total operating expenses	114,180	95,203	18,977	93,391
Operating income (loss)	(23,680)	14,540	38,220	13,367
Non-operating revenues (expenses):				
Investment income	-	211	211	3,955
Operating transfer in	-	102,855	102,855	-
Sewer capital fees	20,000	6,812	(13,188)	15,974
Sewer custom fees	-	-	-	114
Interest expense	(7,728)	(7,703)	25	(7,850)
Total non-operating revenues (expenses)	12,272	102,175	89,903	12,193
Income (loss) before special and extraordinary items	(11,408)	116,715	128,123	25,560
Special and extraordinary items:				
Sale of electric operations:				
Capital asset transfers in	-	-	-	320
Loss on total OPEB liability	-	-	-	(14,661)
Total extraordinary items	-	-	-	(14,341)
Change in net position	$ (11,408)	116,715	$ 128,123	11,219
Net Position:				
Beginning balance		550,989		539,770
End of year		$ 667,704		$ 550,989

LINCOLN COUNTY, NEVADA
NONMAJOR PIOCHE PUBLIC UTILITY SEWER ENTERPRISE FUND (019, 036, 119, 131)
COMPARATIVE STATEMENT OF CASH FLOWS
FOR THE YEARS ENDED JUNE 30, 2021 AND 2020

	2021	2020
Cash flows from operating activities:		
Cash received from customers	$ 112,918	$ 104,581
Cash paid for services and supplies	(17,592)	(23,131)
Cash paid for salaries and benefits	(61,996)	(35,712)
Net cash provided (used) by operating activities	33,330	45,738
Cash flows from noncapital financing activities		
Operating transfers in	102,855	-
Cash flows from capital and related financing activities:		
Capital fees	6,812	15,974
Custom fees	-	114
Debt retirement	(3,440)	(3,294)
Interest paid	(7,728)	(7,874)
Net cash provided (used) by capital and related financing activities	(4,356)	4,920
Cash flows from investing activities:		
Investment income	278	3,972
Net change in cash and cash equivalents	132,107	54,630
Cash:		
Beginning of year	289,183	234,553
End of year	$ 421,290	$ 289,183
Reconciliation of operating income (loss) to net cash provided (used) by operating activities:		
Operating income (loss)	$ 14,540	$ 13,367
Adjustments to reconcile operating income (loss) to net cash provided (used) by operating activities:		
Depreciation expense	19,749	18,557
(Increase) decrease in accounts receivable	3,175	(2,177)
(Increase) decrease in deferred outflows pension charge	(905)	1,274
(Increase) decrease in deferred outflows OPEB	-	(1,102)
Increase (decrease) in accounts payable	(407)	367
Increase (decrease) in accrued payroll and benefits	(1,247)	450
Increase (decrease) in compensated absences	(502)	4,555
Increase (decrease) in net pension liability	(1,179)	(1,540)
Increase (decrease) in deferred inflows pension charge	493	428
Increase (decrease) in total OPEB liability	(387)	26,220
Loss on special items	-	(14,661)
Total adjustments	18,790	32,371
Net cash provided (used) by operating activities	$ 33,330	$ 45,738

LINCOLN COUNTY, NEVADA
NONMAJOR PIOCHE PUBLIC UTILITY ELECTRIC ENTERPRISE FUND (116, 118)
COMPARATIVE STATEMENT OF NET POSITION
JUNE 30, 2021 AND 2020

	2021	2020
ASSETS		
Current assets:		
Pooled cash and investments	$ -	$ 206,441
Interest receivable	-	392
Total assets	-	206,833
LIABILITIES		
Current liabilities:		
Accrued payroll and benefits	-	1,127
NET POSITION		
Unrestricted	-	205,706
Total net position	$ -	$ 205,706

LINCOLN COUNTY, NEVADA
NONMAJOR PIOCHE PUBLIC UTILITY ELECTRIC ENTERPRISE FUND (116, 118)
SCHEDULE OF REVENUES, EXPENSES, AND CHANGES IN NET POSITION -
BUDGET (GAAP BASIS) AND ACTUAL
FOR THE YEAR ENDED JUNE 30, 2021
(With Comparative Actual Amounts for the Year Ended June 30, 2020)

	2021 Budget	2021 Actual	Variance-Positive (Negative)	2020 Actual
Operating revenues:				
Electricity	$ -	$ -	$ -	$ 260,233
Operating expenses:				
Electricity:				
Salaries and wages	-	-	-	44,961
Employee benefits	-	-	-	22,669
Services and supplies	-	-	-	239,473
Total operating expenses	-	-	-	307,103
Operating income (loss)	-	-	-	(46,870)
Non-operating revenues (expenses):				
Investment income	-	4	4	6,404
Electricity capital fees	-	-	-	19,031
Operating transfers out	(205,899)	(205,710)	189	-
Electricity custom fees	-	-	-	1,752
Total non-operating revenues (expenses)	(205,899)	(205,706)	193	27,187
Change in net position before special items	(205,899)	(205,706)	193	(19,683)
Special items:				
Sale of electric operations:				
Capital asset transfer out	-	-	-	(2,640)
Loss on disposal of assets	-	-	-	(349,430)
Gain on net pension liabilites	-	-	-	125,407
Gain on total OPEB liability	-	-	-	29,470
Total special items	-	-	-	(197,193)
Change in net position	$ (205,899)	(205,706)	$ 193	(216,876)
Net Position:				
Beginning of year		205,706		422,582
End of year		$ -		$ 205,706

LINCOLN COUNTY, NEVADA
NONMAJOR PIOCHE PUBLIC UTILITY ELECTRIC ENTERPRISE FUND (116, 118)
COMPARATIVE STATEMENT OF CASH FLOWS
FOR THE YEARS ENDED JUNE 30, 2021 AND 2020

	2021	2020
Cash flows from operating activities:		
Cash received from customers	$ -	$ 307,318
Cash paid for services and supplies	-	(272,450)
Cash paid for salaries and benefits	(1,127)	(238,859)
Net cash provided (used) by operating activities	(1,127)	(203,991)
Cash flows from noncapital financing activities		
Operating transfers out	(205,710)	-
Cash flows from capital and related financing activities:		
Capital fees	-	19,031
Custom fees	-	1,752
Net cash provided (used) by capital and related financing activities	-	20,783
Cash flows from investing activities:		
Investment income	396	6,280
Net change in cash and cash equivalents	(206,441)	(176,928)
Cash:		
Beginning of year	206,441	383,369
End of year	$ -	$ 206,441
Reconciliation of operating income (loss) to net cash provided (used) by operating activities:		
Operating income (loss)	$ -	$ (46,870)
Adjustments to reconcile operating income (loss) to net cash provided (used) by operating activities:		
(Increase) decrease in accounts receivable	-	55,115
(Increase) decrease in deferred outflows pension charge		20,745
(Increase) decrease in deferred outflows OPEB		1,762
Increase (decrease) in accounts payable	-	(32,977)
Increase (decrease) in accrued payroll and benefits	(1,127)	(3,963)
Increase (decrease) in compensated absences	-	(11,630)
Increase (decrease) in net pension liability	-	(132,110)
Increase (decrease) in deferred inflows pension charge	-	(14,042)
Increase (decrease) in total OPEB liability	-	(31,232)
Increase (decrease) in customer deposits	-	(8,030)
Loss on special items	-	(759)
Total adjustments	(1,127)	(157,121)
Net cash provided (used) by operating activities	$ (1,127)	$ (203,991)

LINCOLN COUNTY, NEVADA
NONMAJOR BUILDING DEPARTMENT ENTERPRISE FUND (049)
COMPARATIVE STATEMENT OF NET POSITION
JUNE 30, 2021 AND 2020

	2021	2020
ASSETS		
Current assets:		
Pooled cash and investments	$ 44,454	$ 21,014
Interest receivable	26	29
Total assets	44,480	21,043
DEFERRED OUTFLOWS OF RESOURCES		
Deferred net pension charge	15,255	19,101
LIABILITIES		
Current liabilities:		
Accounts payable	462	261
Accrued payroll and benefits	6,212	5,849
Accrued compensated absences	4,934	5,175
Total current liabilities	11,608	11,285
Non-current liabilities:		
Accrued compensated absences	4,040	3,450
Net pension liability	92,432	94,488
Total non-current liabilities	96,472	97,938
Total liabilities	108,080	109,223
DEFERRED INFLOWS OF RESOURCES		
Deferred net pension charge	18,336	20,318
NET POSITION		
Unrestricted	(66,681)	(89,397)
Total net position	$ (66,681)	$ (89,397)

LINCOLN COUNTY, NEVADA
NONMAJOR BUILDING DEPARTMENT ENTERPRISE FUND (049)
SCHEDULE OF REVENUES, EXPENSES, AND CHANGES IN NET POSITION - BUDGET (GAAP BASIS) AND ACTUAL
FOR THE YEAR ENDED JUNE 30, 2021
(With Comparative Actual Amounts for the Year Ended June 30, 2020)

	2021 Budget	2021 Actual	Variance-Positive (Negative)	2020 Actual
Operating revenues:				
Charges for services	$ 20,000	$ 35,917	$ 15,917	$ 22,144
Operating expenses:				
Public works:				
Salaries and wages	43,186	33,774	9,412	36,431
Employee benefits	14,898	26,963	(12,065)	31,863
Service and supplies	13,660	2,503	11,157	3,682
Depreciation	1,000	-	1,000	476
Total operating expenses	72,744	63,240	9,504	72,452
Operating income (loss)	(52,744)	(27,323)	25,421	(50,308)
Non-operating revenues (expenses):				
Investment income	-	39	39	482
Operating transfers in	50,000	50,000	-	50,000
Total non-operating revenues (expenses)	50,000	50,039	39	50,482
Change in net position	$ (2,744)	22,716	25,460	174
Net Position:				
Beginning balance		(89,397)		(89,571)
End of year		$ (66,681)		$ (89,397)

LINCOLN COUNTY, NEVADA
NONMAJOR BUILDING DEPARTMENT ENTERPRISE FUND (049)
COMPARATIVE STATEMENT OF CASH FLOWS
FOR THE YEARS ENDED JUNE 30, 2021 AND 2020

	2021	2020
Cash flows from operating activities:		
Cash received from customers	$ 35,917	$ 22,144
Cash paid for services and supplies	(2,302)	(3,557)
Cash paid for salaries and benefits	(60,217)	(70,897)
Net cash provided (used) by operating activities	(26,602)	(52,310)
Cash flows from noncapital financing activities:		
Operating transfers in	50,000	50,000
Cash flows from investing activities:		
Investment income	42	499
Net change in cash and cash equivalents	23,440	(1,811)
Cash:		
Beginning of year	21,014	22,825
End of year	$ 44,454	$ 21,014
Reconciliation of operating income (loss) to net cash provided (used) by operating activities:		
Operating income (loss)	$ (27,323)	$ (50,308)
Adjustments to reconcile operating income to net cash provided (used) by operating activities:		
Depreciation expense	-	476
(Increase) decrease in deferred outflows pension charge	3,846	708
Increase (decrease) in accounts payable	201	125
Increase (decrease) in accrued payroll and benefits	363	(1,071)
Increase (decrease) in compensated absences	349	(3,765)
Increase (decrease) in net pension liability	(2,056)	(5,957)
Increase (decrease) in deferred inflows pension charge	(1,982)	7,482
Total adjustments	721	(2,002)
Net cash provided (used) by operating activities	$ (26,602)	$ (52,310)

LINCOLN COUNTY, NEVADA
FIDUCIARY FUNDS
CUSTODIAL FUNDS
COMBINING STATEMENT OF NET POSITION
JUNE 30, 2021

	Tax Trust	State	Caliente City	Caliente City Capital Projects	Fish and Game
ASSETS					
Pooled cash and investments	$ 103,940	$ 98,022	$ 1,357	$ 16,820	$ 5,733
Interest receivable	18	-	15	-	-
Taxes receivable	-	3,273	2,024	-	-
Due from other governments	-	-	-	-	-
Total assets	103,958	101,295	3,396	16,820	5,733
LIABILITIES					
Accounts payable and other liabilities	-	-	-	-	75
Due to other governments	-	98,549	2,620	16,820	-
Unavailable revenue - taxes	-	2,746	776	-	-
Total liabilities	-	101,295	3,396	16,820	75
NET POSITION					
Restricted for pool participants	-	-	-	-	-
Restricted for other governments	-	-	-	-	5,658
Restricted for individuals	103,958	-	-	-	-
Total net position	$ 103,958	$ -	$ -	$ -	$ 5,658

Range	School General	School Debt Service	Lincoln County TV District	Pahranagat Fire District	Public Land	Hospital
$ 26,702	$ 2,707	$ 210,895	$ 175	$ 4,349	$ 208	$ 967
80	-	796	-	10	-	-
-	12,600	3,747	-	624	-	4,501
-	-	-	-	10,850	-	-
26,782	15,307	215,438	175	15,833	208	5,468
267	-	-	-	-	-	-
-	4,733	-	175	15,285	-	1,691
-	10,574	3,144	-	548	-	3,777
267	15,307	3,144	175	15,833	-	5,468
-	-	-	-	-	-	-
26,515	-	212,294	-	-	208	-
-	-	-	-	-	-	-
$ 26,515	$ -	$ 212,294	$ -	$ -	$ 208	$ -

LINCOLN COUNTY, NEVADA
FIDUCIARY FUNDS
CUSTODIAL FUNDS
COMBINING STATEMENT OF NET POSITION
JUNE 30, 2021

	Panaca Fire Protection District	Pioche Fire District	SB 371	SLCHCP GID	Lincoln County Fire Protection District
ASSETS					
Pooled cash and investments	$ 32,979	$ 55,047	$ 75	$ 169,126	$ 1,100,432
Interest receivable	108	377	-	1,474	5,613
Taxes receivable	908	359	-	3	1,100
Due from other governments	-	6,117	-	-	254,371
Total assets	33,995	61,900	75	170,603	1,361,516
LIABILITIES					
Accounts payable and other liabilities	-	-	-	-	-
Due to other governments	33,221	61,564	75	170,603	1,360,449
Unavailable revenue - taxes	774	336	-	-	1,067
Total liabilities	33,995	61,900	75	170,603	1,361,516
NET POSITION					
Restricted for pool participants	-	-	-	-	-
Restricted for other governments	-	-	-	-	-
Restricted for individuals	-	-	-	-	-
Total net position	$ -	$ -	$ -	$ -	$ -

External Investment Pool	Totals 2021
$ 3,209,960	$ 5,039,494
-	8,491
-	29,139
-	271,338
3,209,960	5,348,462
-	342
-	1,765,785
-	23,742
-	1,789,869
3,209,960	3,209,960
-	244,675
-	103,958
$ 3,209,960	$ 3,558,593

LINCOLN COUNTY, NEVADA
FIDUCIARY FUNDS
CUSTODIAL FUNDS
COMBINING STATEMENT OF CHANGES IN NET POSITION
FOR THE YEAR ENDED JUNE 30, 2021

	Tax Trust	State	Caliente City	Caliente City Capital Projects	Fish and Game
ADDITIONS:					
Taxes:					
Total taxes	$ 103,911	$ 323,323	$ 155,250	$ -	$ -
Licenses and permits:					
Total licenses and permits	-	121	3,150	-	-
Charges for services:					
Total charges for services	-	209,352	-	-	-
Fines and forfeitures:					
Total fines and forfeited bail	-	26,801	-	-	-
Intergovernmental:					
Total intergovernmental	-	127,614	-	8,408	2,561
Miscellaneous:					
Total miscellaneous	47	-	15	-	-
Total revenue	103,958	687,211	158,415	8,408	2,561
DEDUCTIONS:					
General government:					
Payments to other governments	-	687,211	158,415	8,408	263
Change in net position	103,958	-	-	-	2,298
Net position - beginning of year	-	-	-	-	3,360
Net position - end of year	$ 103,958	$ -	$ -	$ -	$ 5,658

Range	School General	School Debt Service	Lincoln County TV District	Pahranagat Fire District	Public Land	Hospital
$ -	$ 1,799,167	$ 535,190	$ -	$ 61,895	$ -	$ 642,658
-	-	-	-	-	-	-
-	-	-	52,760	-	-	-
-	-	-	-	-	-	-
34,209	14,201	47,332	-	59,342	-	573
98	-	1,042	-	6	-	-
34,307	1,813,368	583,564	52,760	121,243	-	643,231
35,175	1,813,368	532,914	52,760	121,243	-	643,231
(868)	-	50,650	-	-	-	-
27,383	-	161,644	-	-	208	-
$ 26,515	$ -	$ 212,294	$ -	$ -	$ 208	$ -

LINCOLN COUNTY, NEVADA
FIDUCIARY FUNDS
CUSTODIAL FUNDS
COMBINING STATEMENT OF CHANGES IN NET POSITION
FOR THE YEAR ENDED JUNE 30, 2021

	Panaca Fire Protection District	Pioche Fire District	SB 371	SLCHCP GID	Lincoln County Fire Protection District
ADDITIONS:					
Taxes:					
Total taxes	$ 53,914	$ 29,494	$ -	$ 2,351	$ 368,208
Licenses and permits:					
Total licenses and permits	-	-	650	-	-
Charges for services:					
Total charges for services	-	-	-	-	1,497,984
Fines and forfeitures:					
Total fines and forfeited bail	-	-	-	-	-
Intergovernmental:					
Total intergovernmental	-	33,259	-	-	264,384
Miscellaneous:					
Total miscellaneous	103	11,014	-	1,758	9,459
Total revenue	54,017	73,767	650	4,109	2,140,035
DEDUCTIONS:					
General government:					
Payments to other governments	54,017	73,767	650	4,109	2,140,035
Change in net position	-	-	-	-	-
Net position - beginning of year	-	-	-	-	-
Net position - end of year	$ -	$ -	$ -	$ -	$ -

External Investment Pool	Total 2021
$ -	$ 4,075,361
-	3,921
-	1,760,096
-	26,801
-	591,883
13,373	36,915
13,373	6,494,977
-	6,325,566
13,373	169,411
3,196,587	3,389,182
$ 3,209,960	$ 3,558,593

DANIEL C. McARTHUR, LTD.
Certified Public Accountant

Quail Park III • 501 So. Rancho Dr., Ste. E-30 • Las Vegas, NV 89106 • (702) 385-1899 • FAX (702) 385-9619

INDEPENDENT AUDITOR'S REPORT ON INTERNAL CONTROL OVER FINANCIAL REPORTING AND ON COMPLIANCE AND OTHER MATTERS BASED ON AN AUDIT OF FINANCIAL STATEMENTS PERFORMED IN ACCORDANCE WITH *GOVERNMENT AUDITING STANDARDS*

Honorable Board of County Commissioners
Lincoln County, Nevada
Pioche, Nevada

We have audited, in accordance with the auditing standards generally accepted in the United States of America and the standards applicable to financial audits contained in *Government Auditing Standards*, issued by the Comptroller General of the United States, the financial statements of the governmental activities, the business-type activities, each major fund, and the aggregate remaining fund information of Lincoln County, Nevada (the County), as of and for the year ended June 30, 2021, and the related notes to the financial statements, which collectively comprise the County's basic financial statements, and have issued our report thereon dated November 29, 2021.

Internal Control over Financial Reporting

In planning and performing our audit of the financial statements, we considered the County's internal control over financial reporting (internal control) as a basis for designing audit procedures that are appropriate in the circumstances for the purpose of expressing our opinions on the financial statements, but not for the purpose of expressing an opinion on the effectiveness of the County's internal control. Accordingly, we do not express an opinion on the effectiveness of the County's internal control.

A *deficiency in internal control* exists when the design or operation of a control does not allow management or employees, in the normal course of performing their assigned functions, to prevent, or detect and correct misstatements on a timely basis. A *material weakness* is a deficiency, or a combination of deficiencies, in internal control, such that there is a reasonable possibility that a material misstatement of the entity's financial statements will not be prevented, or detected and corrected on a timely basis. A *significant deficiency* is a deficiency, or a combination of deficiencies, in internal control that is less severe than a material weakness, yet important enough to merit attention by those charged with governance.

Our consideration of internal control was for the limited purpose described in the first paragraph of this section and was not designed to identify all deficiencies in internal control that might be material weaknesses or, significant deficiencies. Given these limitations, during our audit we did not identify any deficiencies in internal control that we consider to be material weaknesses. However, material weaknesses may exist that have not been identified.

Compliance and Other Matters

As part of obtaining reasonable assurance about whether the County's financial statements are free from material misstatement, we performed tests of its compliance with certain provisions of laws, regulations, contracts, and grant agreements, noncompliance with which could have a direct and material effect on the financial statements. However, providing an opinion on compliance with those provisions was not an objective of our audit, and accordingly, we do not express such an opinion. The results of our tests disclosed no instances of noncompliance or other matters that are required to be reported under *Government Auditing Standards.*

Purpose of this Report

The purpose of this report is solely to describe the scope of our testing of internal control and compliance and the results of that testing, and not to provide an opinion on the effectiveness of the entity's internal control or on compliance. This report is an integral part of an audit performed in accordance with *Government Auditing Standards* in considering the entity's internal control and compliance. Accordingly, this communication is not suitable for any other purpose.



Las Vegas, Nevada
November 29, 2021

DANIEL C. McARTHUR, LTD.
Certified Public Accountant

Quail Park III • 501 So. Rancho Dr., Ste. E-30 • Las Vegas, NV 89106 • (702) 385-1899 • FAX (702) 385-9619

AUDITOR'S COMMENTS

Honorable Board of County Commissioners
Lincoln County, Nevada
Pioche, Nevada

In connection with our audit of the financial statements of the governmental activities, the business-type activities, each major fund, and the aggregate remaining fund information of Lincoln County, Nevada (the County) as of and for the year ended June 30, 2021, and the related notes to the financial statements, nothing came to our attention that caused us to believe that the County failed to comply with the specific requirements of Nevada Revised Statutes referenced below insofar as they relate to accounting matters except as noted below. However, our audit was not directed primarily toward obtaining knowledge of such noncompliance. Accordingly, had we performed additional procedures, other matters may have come to our attention regarding the County's noncompliance with the requirements of Nevada Revised Statutes noted below, insofar as they relate to accounting matters.

CURRENT YEAR STATUTE COMPLIANCE

Expenditures in Excess of Appropriations

Per NRS 354.626, the County is required to report expenditures that exceeded budgeted appropriations at the function level for the General Fund, Special Revenue Funds, and Capital Project Funds. Enterprise funds may not exceed budget appropriations at the fund level. For the year ending June 30, 2021, the County had the following expenditures over appropriations that are required to be reported.

General Fund – Health function	$	479
Lincoln County Water District General	$	24,420
Detention Center Enterprise Fund	$	18,832
Solid Waste Enterprise Fund	$	37,470

The General Fund over expenditure in the fund relate to expenses that came in after year end that caused the functions to go over budget. The Lincoln County Water District Fund over expenditures in the fund relates to legal fees that were previously not budgeted, the District Manager was aware of this issue. The Detention Center Fund over expenditures relates to net pension liability adjustments. The Solid Waste Fund over expenditure relates to depreciation expenses on new equipment previously not budgeted.

Deficit Fund Balance/Net Position

Legal Aid Services Fund	$	1,739
County Grants Fund	$	46,654
Detention Center Enterprise Fund	$	2,573,191
Building Department Enterprise Fund	$	66,681

The deficit net position of the Detention Center and Building Department Enterprise funds are due to the individual fund's proportionate share of the net pension liability of the Public Employees' Retirement System of the State of Nevada of $3,071,179 and $92,432. The Legal Aid Fund deficit was caused by a legal issue with the court and there are insufficient revenues to cover these costs. The County Grants Fund deficit was caused by grant receivables of $111,601 that were not received within 60 days after year end and were therefore considered unavailable.

PROGRESS ON PRIOR YEAR STATUTE COMPLIANCE

The County had similar findings in the current year as listed above.

CURRENT YEAR RECOMMENDATIONS

We noted no material weakness and reported no significant deficiencies in internal controls.

PRIOR YEAR RECOMMENDATIONS

We noted no material weakness and reported no significant deficiencies in internal controls in the prior year.

NEVADA REVISED STATUTE 354.6115 - STABILIZATION FUND

The County created a stabilization fund in accordance with Nevada Revised Statute 354.6115, "Fund to stabilize operations of local government and mitigate effects of natural disaster". The fund is reported on pages 230 and 231 of the financial statements as an "internally reported (budgetary basis) fund reported as part of the General Fund for external reporting purposes. Compliance with Nevada Revised Statutes is contained in Note C1 to the financial statements.

NEVADA REVISED STATUTE 354.5989 – BUSINESS LICENSES

Nevada Revised Statutes 354.624.4(a) requires a schedule of all fees imposed by the County which are subject to the provisions of NRS 354.5989 be addressed by the independent auditor. During the year ended June 30, 2021, the County did not raise fees on business licenses subject to the limitation of NRS 354.5989.

NEVADA REVISED STATUTE 354.59815 – CAPITAL PROJECTS FUND (Special Ad Valorem)

Capital Improvements Fund - The County established the Capital Improvements Fund in accordance with Nevada Revised Statutes 354.59815. Compliance with Nevada Revised Statutes is contained in Note C1 to the financial statements. The County does not plan to accumulate money in the fund. Projects funded during the year were as follows:

Intergovernmental – Payment to City	$ 8,408
Transfer to the Pioche Town Capital Projects fund	$ 3,603
Transfer to the Alamo Town Capital Projects fund	$ 2,574
Transfer to the Panaca Town Capital Projects fund	$ 4,804
Transfer to the Vehicle Capital Projects fund used to purchase vehicles	$ 88,016

Pioche Town Capital Projects Fund - The County established the Pioche Town Capital Projects Fund in accordance with Nevada Revised Statutes 354.59815. Compliance with Nevada Revised Statutes is contained in Note C1 to the financial statements. The County does not plan to accumulate money in the fund. There were no projects funded during the year.

Panaca Town Capital Projects Fund - The County established the Panaca Town Capital Projects Fund in accordance with Nevada Revised Statutes 354.59815. Compliance with Nevada Revised Statutes is contained in Note C1 to the financial statements. The County does not plan to accumulate money in the fund. Projects funded during the year were as follows:

Equipment	$ 2,325

Alamo Town Capital Projects Fund - The County established the Alamo Town Capital Projects Fund in accordance with Nevada Revised Statutes 354.59815. Compliance with Nevada Revised Statutes is contained in Note C1 to the financial statements. The County does not plan to accumulate money in the fund. There were no projects funded during the year.

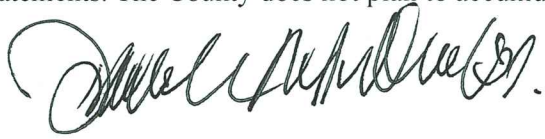

Las Vegas, Nevada
November 29, 2021

LINCOLN COUNTY, NEVADA

REPORT ON FINANCIAL STATEMENTS AND SUPPLEMENTARY INFORMATION

YEAR ENDED JUNE 30, 2020

LINCOLN COUNTY, NEVADA
REPORT ON FINANCIAL STATEMENTS
YEAR ENDED JUNE 30, 2020
TABLE OF CONTENTS

	PAGE
INTRODUCTORY SECTION	
Organization	1
FINANCIAL SECTION	
Independent Auditor's Report	2-4
Management's Discussion and Analysis	5-13
BASIC FINANCIAL STATEMENTS:	
GOVERNMENT-WIDE FINANCIAL STATEMENTS:	
Statement of Net Position	14
Statement of Activities	15
FUND FINANCIAL STATEMENTS:	
GOVERNMENTAL FUNDS:	
Balance Sheet	16-17
Reconciliation of the Governmental Funds Balance Sheet to the Statement of Net Position	18
Statement of Revenues, Expenditures, and Changes in Fund Balances	19-20
Reconciliation of the Statement of Revenues, Expenditures, and Changes in Fund Balance of Governmental Funds to the Statement of Activities	21
PROPRIETARY FUNDS:	
Statement of Net Position	22-23
Statement of Revenues, Expenses, and Changes in Net Position	24-25
Statement of Cash Flows	26-27
FIDUCIARY FUND:	
Statement of Fiduciary Net Position	28
Statement of Changes in Fiduciary Net Position	29
Notes to the Basic Financial Statements	30-62
REQUIRED SUPPLEMENTARY INFORMATION:	
Schedule of Revenues, Expenditures, and Changes in Fund Balance - Budget (GAAP Basis) and Actual	
General Fund (Budgetary Basis)	63-68
Road Special Revenue Fund	69
Lincoln County Water District Water Resources Special Revenue Fund	70
Lincoln County Land Act Special Revenue Fund	71
County Grant Special Revenue Fund	72
Reconciliation of the General Fund (Budgetary Basis) to the General Fund (GAAP Basis)	73
Schedule of Changes in the County's Total OPEB Liability and Related Ratios	74
Schedule of the County's Contributions to the Public Employees' Retirement System of the State of Nevada	75
Schedule of the County's Porportionate Share of the Net Pension Liability	76
Notes to Required Supplementary Information	77
SUPPLEMENTARY INFORMATION:	
COMBINING AND INDIVIDUAL FUND STATEMENTS AND SCHEDULES:	
NONMAJOR GOVERNMENTAL FUNDS:	
Combining Balance Sheet	78
Combining Statement of Revenues, Expenditures, and Changes in Fund Balance	79
GOVERNMENTAL FUNDS:	
Reconciliation of the General Fund (Budgetary Basis) to the General Fund (GAAP Basis) - Balance Sheet	80

SUPPLEMENTARY INFORMATION (Continued):
COMBINING AND INDIVIDUAL FUND STATEMENTS AND SCHEDULES (Continued):
MAJOR GOVERNMENTAL FUNDS:
General Fund:
Comparative Balance Sheets 81
Schedule of Revenues, Expenditures, and Changes in Fund Balance - Budget (Budgetary Basis) and Actual 82
Schedule of Revenues Compared to Budget (Budgetary Basis) 83
Schedule of Expenditures Compared to Budget (Budgetary Basis) 84-87
Road Special Revenue Fund:
Comparative Balance Sheets 88
Schedule of Revenues, Expenditures, and Changes in Fund Balance - Budget (GAAP Basis) and Actual 89
Lincoln County Water District Water Resources Special Revenue Fund:
Comparative Balance Sheets 90
Schedule of Revenues, Expenditures, and Changes in Fund Balance - Budget (GAAP Basis) and Actual 91
Lincoln County Land Act Special Use Revenue Fund:
Comparative Balance Sheets 92
Schedule of Revenues, Expenditures, and Changes in Fund Balance - Budget (GAAP Basis) and Actual 93
County Grant Special Revenue Fund:
Comparative Balance Sheets 94
Schedule of Revenues, Expenditures, and Changes in Fund Balance - Budget (GAAP Basis) and Actual 95
MAJOR ENTERPRISE FUND:
Detention Center Enterprise Fund:
Comparative Statement of Net Position 96
Schedule of Revenues, Expenses and Changes in Net Position 97
Comparative Statement of Cash Flows 98
Solid Waste:
Statement of Net Position 99
Schedule of Revenues, Expenses and Changes in Net Position 100
Statement of Cash Flows 101
NONMAJOR SPECIAL REVENUE FUNDS:
Combining Balance Sheet 102-111
Combining Schedule of Revenues, Expenditures, and Changes in Fund Balances 112-121
Pioche Town:
Comparative Balance Sheets 122
Schedule of Revenues, Expenditures, and Changes in Fund Balance - Budget (GAAP Basis) and Actual 123-124
Alamo Town:
Comparative Balance Sheets 125
Schedule of Revenues, Expenditures, and Changes in Fund Balance - Budget (GAAP Basis) and Actual 126-127
Panaca Town:
Comparative Balance Sheets 128
Schedule of Revenues, Expenditures, and Changes in Fund Balance - Budget (GAAP Basis) and Actual 129-130
Federal In Lieu Tax Special Revenue Fund:
Comparative Balance Sheets 131
Schedule of Revenues, Expenditures, and Changes in Fund Balance - Budget (GAAP Basis) and Actual 132-133
Resource Development Authority:
Comparative Balance Sheets 134
Schedule of Revenues, Expenditures, and Changes in Fund Balance - Budget (GAAP Basis) and Actual 135
County Library:
Comparative Balance Sheets 136
Schedule of Revenues, Expenditures, and Changes in Fund Balance - Budget (GAAP Basis) and Actual 137
Museum:
Comparative Balance Sheets 138
Schedule of Revenues, Expenditures, and Changes in Fund Balance - Budget (GAAP Basis) and Actual 139

SUPPLEMENTARY INFORMATION (Continued):
COMBINING AND INDIVIDUAL FUND STATEMENTS AND SCHEDULES (Continued):
NONMAJOR SPECIAL REVENUE FUNDS:
Senior Nutrition:
Comparative Balance Sheets 140
Schedule of Revenues, Expenditures, and Changes in Fund Balance - Budget (GAAP Basis) and Actual 141
Transportation:
Comparative Balance Sheets 142
Schedule of Revenues, Expenditures, and Changes in Fund Balance - Budget (GAAP Basis) and Actual 143
Agricultural Extension:
Comparative Balance Sheets 144
Schedule of Revenues, Expenditures, and Changes in Fund Balance - Budget (GAAP Basis) and Actual 145
Indigent:
Comparative Balance Sheets 146
Schedule of Revenues, Expenditures, and Changes in Fund Balance - Budget (GAAP Basis) and Actual 147
Medical Indigent:
Comparative Balance Sheets 148
Schedule of Revenues, Expenditures, and Changes in Fund Balance - Budget (GAAP Basis) and Actual 149
China Springs:
Comparative Balance Sheets 150
Schedule of Revenues, Expenditures, and Changes in Fund Balance - Budget (GAAP Basis) and Actual 151
Ambulance:
Comparative Balance Sheets 152
Schedule of Revenues, Expenditures, and Changes in Fund Balance - Budget (GAAP Basis) and Actual 153
Regional Transportation Commission:
Comparative Balance Sheets 154
Schedule of Revenues, Expenditures, and Changes in Fund Balance - Budget (GAAP Basis) and Actual 155
Room Tax:
Comparative Balance Sheets 156
Schedule of Revenues, Expenditures, and Changes in Fund Balance - Budget (GAAP Basis) and Actual 157
Legal Aid Services:
Comparative Balance Sheets 158
Schedule of Revenues, Expenditures, and Changes in Fund Balance - Budget (GAAP Basis) and Actual 159
Forensic Services:
Comparative Balance Sheets 160
Schedule of Revenues, Expenditures, and Changes in Fund Balance - Budget (GAAP Basis) and Actual 161
Administrative Assessment:
Comparative Balance Sheets 162
Schedule of Revenues, Expenditures, and Changes in Fund Balance - Budget (GAAP Basis) and Actual 163
Forfeiture:
Comparative Balance Sheets 164
Schedule of Revenues, Expenditures, and Changes in Fund Balance - Budget (GAAP Basis) and Actual 165
Recorder Technology:
Comparative Balance Sheets 166
Schedule of Revenues, Expenditures, and Changes in Fund Balance - Budget (GAAP Basis) and Actual 167
L.C. Housing Authority:
Comparative Balance Sheets 168
Schedule of Revenues, Expenditures, and Changes in Fund Balance - Budget (GAAP Basis) and Actual 169
Alamo Clinic:
Comparative Balance Sheets 170
Schedule of Revenues, Expenditures, and Changes in Fund Balance - Budget (GAAP Basis) and Actual 171
Fair Board:
Comparative Balance Sheets 172
Schedule of Revenues, Expenditures, and Changes in Fund Balance - Budget (GAAP Basis) and Actual 173

SUPPLEMENTARY INFORMATION (Continued):
COMBINING AND INDIVIDUAL FUND STATEMENTS AND SCHEDULES (Continued):
NONMAJOR SPECIAL REVENUE FUNDS (Continued):
Multi-species Habitat Conservation :
Comparative Balance Sheets 174
Schedule of Revenues, Expenditures, and Changes in Fund Balance - Budget (GAAP Basis) and Actual 175
Multi-species Habitat Conservation Section 7:
Comparative Balance Sheets 176
Schedule of Revenues, Expenditures, and Changes in Fund Balance - Budget (GAAP Basis) and Actual 177
Youth Activities Counsel:
Comparative Balance Sheet 178
Schedule of Revenues, Expenditures, and Changes in Fund Balance - Budget (GAAP Basis) and Actual 179
Genetic Marker Testing :
Comparative Balance Sheet 180
Schedule of Revenues, Expenditures, and Changes in Fund Balance - Budget (GAAP Basis) and Actual 181
Public Improvement:
Comparative Balance Sheet 182
Schedule of Revenues, Expenditures, and Changes in Fund Balance - Budget (GAAP Basis) and Actual 183
Airport:
Comparative Balance Sheet 184
Schedule of Revenues, Expenditures, and Changes in Fund Balance - Budget (GAAP Basis) and Actual 185
Panaca Town Building:
Comparative Balance Sheet 186
Schedule of Revenues, Expenditures, and Changes in Fund Balance - Budget (GAAP Basis) and Actual 187
Court Facility Fees:
Comparative Balance Sheet 188
Schedule of Revenues, Expenditures, and Changes in Fund Balance - Budget (GAAP Basis) and Actual 189
Tri-County Weed Control:
Comparative Balance Sheet 190
Schedule of Revenues, Expenditures, and Changes in Fund Balance - Budget (GAAP Basis) and Actual 191
Lincoln County Land Act - General:
Comparative Balance Sheet 192
Schedule of Revenues, Expenditures, and Changes in Fund Balance - Budget (GAAP Basis) and Actual 193
Lincoln County Land Act - Planning and Development:
Comparative Balance Sheet 194
Schedule of Revenues, Expenditures, and Changes in Fund Balance - Budget (GAAP Basis) and Actual 195
Lincoln County Land Act - Education:
Comparative Balance Sheet 196
Schedule of Revenues, Expenditures, and Changes in Fund Balance - Budget (GAAP Basis) and Actual 197
Lincoln County Land Act - Grant Match:
Comparative Balance Sheet 198
Schedule of Revenues, Expenditures, and Changes in Fund Balance - Budget (GAAP Basis) and Actual 199
Lincoln County Water - General:
Comparative Balance Sheet 200
Schedule of Revenues, Expenditures, and Changes in Fund Balance - Budget (GAAP Basis) and Actual 201
Lincoln County Water - Special Projects:
Comparative Balance Sheet 202
Schedule of Revenues, Expenditures, and Changes in Fund Balance - Budget (GAAP Basis) and Actual 203
Lincoln County Water - Planning and Development:
Comparative Balance Sheet 204
Schedule of Revenues, Expenditures, and Changes in Fund Balance - Budget (GAAP Basis) and Actual 205
Lincoln County Water - Special Use:
Comparative Balance Sheet 206
Schedule of Revenues, Expenditures, and Changes in Fund Balance - Budget (GAAP Basis) and Actual 207

SUPPLEMENTARY INFORMATION (Continued):
COMBINING AND INDIVIDUAL FUND STATEMENTS AND SCHEDULES (Continued):
NONMAJOR SPECIAL REVENUE FUNDS (Continued):
Lincoln County Water - Grant Match:
Comparative Balance Sheet 208
Schedule of Revenues, Expenditures, and Changes in Fund Balance - Budget (GAAP Basis) and Actual 209
Lincoln County Water District - General :
Comparative Balance Sheets 210
Schedule of Revenues, Expenditures, and Changes in Fund Balance - Budget (GAAP Basis) and Actual 211
Lincoln County Water District - Planning & Development :
Comparative Balance Sheets 212
Schedule of Revenues, Expenditures, and Changes in Fund Balance - Budget (GAAP Basis) and Actual 213
Lincoln County Water District - Special Projects :
Comparative Balance Sheets 214
Schedule of Revenues, Expenditures, and Changes in Fund Balance - Budget (GAAP Basis) and Actual 215
Assessor Technology:
Comparative Balance Sheets 216
Schedule of Revenues, Expenditures, and Changes in Fund Balance - Budget (GAAP Basis) and Actual 217
District Court Technology:
Comparative Balance Sheets 218
Schedule of Revenues, Expenditures, and Changes in Fund Balance - Budget (GAAP Basis) and Actual 219
District Court Specialty Court:
Comparative Balance Sheets 220
Schedule of Revenues, Expenditures, and Changes in Fund Balance - Budget (GAAP Basis) and Actual 221
Court Security Fee:
Comparative Balance Sheets 222
Schedule of Revenues, Expenditures, and Changes in Fund Balance - Budget (GAAP Basis) and Actual 223
District Court Enrichment:
Comparative Balance Sheets 224
Schedule of Revenues, Expenditures, and Changes in Fund Balance - Budget (GAAP Basis) and Actual 225
Demerit Point Reduction:
Balance Sheet 226
Schedule of Revenues, Expenditures, and Changes in Fund Balance - Budget (GAAP Basis) and Actual 227
Property Management:
Comparative Balance Sheets 228
Schedule of Revenues, Expenditures, and Changes in Fund Balance - Budget (GAAP Basis) and Actual 229

Internally Reported (Budgetary Basis) Funds Reported as Part of the General Fund for External Reporting Purposes (Continued):
Combining Balance Sheet 230-231
Combining Schedule of Revenues, Expenditures and Changes in Fund Balance 232-233
Stabilization:
Comparative Balance Sheets 234
Schedule of Revenues, Expenditures, and Changes in Fund Balance - Budget (GAAP Basis) and Actual 235
Planning:
Comparative Balance Sheets 236
Schedule of Revenues, Expenditures, and Changes in Fund Balance - Budget (GAAP Basis) and Actual 237
Rachel Jones Memorial Cemetery:
Comparative Balance Sheets 238
Schedule of Revenues, Expenditures, and Changes in Fund Balance - Budget (GAAP Basis) and Actual 239
Flood Control:
Comparative Balance Sheets 240
Schedule of Revenues, Expenditures, and Changes in Fund Balance - Budget (GAAP Basis) and Actual 241
Special Projects:
Comparative Balance Sheets 242
Schedule of Revenues, Expenditures, and Changes in Fund Balance - Budget (GAAP Basis) and Actual 243

SUPPLEMENTARY INFORMATION (Continued):
COMBINING AND INDIVIDUAL FUND STATEMENTS AND SCHEDULES (Continued):
Internally Reported (Budgetary Basis) Funds Reported as Part of the General Fund for External Reporting Purposes (Continued):
Lincoln County Land Act - Emergency Disaster:
Comparative Balance Sheet 244
Schedule of Revenues, Expenditures, and Changes in Fund Balance - Budget (GAAP Basis) and Actual 245
Lincoln County Water - Emergency Disaster:
Comparative Balance Sheet 246
Schedule of Revenues, Expenditures, and Changes in Fund Balance - Budget (GAAP Basis) and Actual 247
NONMAJOR CAPITAL PROJECTS FUNDS:
Combining Balance Sheet 248-250
Combining Statement of Revenues, Expenditures, and Changes in Fund Balances 251-253
Capital Improvements:
Comparative Balance Sheets 254
Schedule of Revenues, Expenditures, and Changes in Fund Balance - Budget (GAAP Basis) and Actual 255
Pioche Town Grant:
Comparative Balance Sheets 256
Schedule of Revenues, Expenditures, and Changes in Fund Balance - Budget (GAAP Basis) and Actual 257
Pioche Town:
Comparative Balance Sheets 258
Schedule of Revenues, Expenditures, and Changes in Fund Balance - Budget (GAAP Basis) and Actual 259
Alamo Town:
Comparative Balance Sheets 260
Schedule of Revenues, Expenditures, and Changes in Fund Balance - Budget (GAAP Basis) and Actual 261
Panaca Town:
Comparative Balance Sheets 262
Schedule of Revenues, Expenditures, and Changes in Fund Balance - Budget (GAAP Basis) and Actual 263
Ambulance:
Comparative Balance Sheets 264
Schedule of Revenues, Expenditures, and Changes in Fund Balance - Budget (GAAP Basis) and Actual 265
Fair Board:
Comparative Balance Sheets 266
Schedule of Revenues, Expenditures, and Changes in Fund Balance - Budget (GAAP Basis) and Actual 267
Vehicle Capital Projects:
Comparative Balance Sheets 268
Schedule of Revenues, Expenditures, and Changes in Fund Balance - Budget (GAAP Basis) and Actual 269
Road Equipment:
Comparative Balance Sheets 270
Schedule of Revenues, Expenditures, and Changes in Fund Balance - Budget (GAAP Basis) and Actual 271
Airport:
Comparative Balance Sheets 272
Schedule of Revenues, Expenditures, and Changes in Fund Balance - Budget (GAAP Basis) and Actual 273
Lincoln County Land Act:
Comparative Balance Sheets 274
Schedule of Revenues, Expenditures, and Changes in Fund Balance - Budget (GAAP Basis) and Actual 275
Lincoln County Water:
Comparative Balance Sheets 276
Schedule of Revenues, Expenditures, and Changes in Fund Balance - Budget (GAAP Basis) and Actual 277
Lincoln County Water District:
Comparative Balance Sheets 278
Schedule of Revenues, Expenditures, and Changes in Fund Balance - Budget (GAAP Basis) and Actual 279

SUPPLEMENTARY INFORMATION (Continued):
COMBINING AND INDIVIDUAL FUND STATEMENTS AND SCHEDULES (Continued):
Nonmajor Enterprise Funds:
Combining Statement of Net Position 280-281
Combining Schedule of Revenues, Expenses and Changes in Net Position 282-283
Combining Statement of Cash Flows 284-285
Pioche Public Utility Water:
Comparative Statement of Net Position 286
Schedule of Revenues, Expenses and Changes in Net Position 287
Comparative Statement of Cash Flows 288
Pioche Public Utility Sewer:
Comparative Statement of Net Position 289
Schedule of Revenues, Expenses and Changes in Net Position 290
Comparative Statement of Cash Flows 291
Pioche Public Utility Electric:
Comparative Statement of Net Position 292
Schedule of Revenues, Expenses and Changes in Net Position 293
Comparative Statement of Cash Flows 294
Building Department:
Comparative Statement of Net Position 295
Schedule of Revenues, Expenses and Changes in Net Position 296
Comparative Statement of Cash Flows 297

AGENCY FUNDS:
Combining Statement of Net Position 298-301
Combining Statement of Changes in Assets and Liabilities 302-306

COMPLIANCE:
Independent Auditor's Report on Internal Control Over Financial Reporting and on Compliance and Other Matters Based on an Audit of Financial Statements Performed in Accordance with *Government Auditing Standards* 307-308

Independent Auditor’s Comments 309-310

LINCOLN COUNTY, NEVADA
ORGANIZATION

COUNTY OFFICERS at June 30, 2020:

Commissioners	Varlin Higbee, Chairman
	Jared Brackenbury, Vice Chairman
	Kevin Phillips, Member
	Bevan Lister, Member
	Keith Pearson, Member
Clerk	Lisa Lloyd
Treasurer	Shawn Frehner
Auditor/Recorder	Amy Elmer
Assessor	Mark Holt
Sheriff	Kerry Lee
District Attorney	Dylan Frehner
Justice of the Peace	Mike Cowley
Justice of the Peace	Nola Holton

DANIEL C. McARTHUR, LTD.
Certified Public Accountant

Quail Park III • 501 So. Rancho Dr., Ste. E-30 • Las Vegas, NV 89106 • (702) 385-1899 • FAX (702) 385-9619

INDEPENDENT AUDITOR'S REPORT

Honorable Board of County Commissioners
Lincoln County, Nevada
Pioche, Nevada

Report on the Financial Statements

We have audited the accompanying financial statements of the governmental activities, the business-type activities, each major fund, and the aggregate remaining fund information of Lincoln County, Nevada (the County), as of and for the year ended June 30, 2020, and the related notes to the financial statements, which collectively comprise the County's basic financial statements as listed in the table of contents.

Management's Responsibility for the Financial Statements

Management is responsible for the preparation and fair presentation of these financial statements in accordance with accounting principles generally accepted in the United States of America; this includes the design, implementation, and maintenance of internal control relevant to the preparation and fair presentation of financial statements that are free from material misstatement, whether due to fraud or error.

Auditor's Responsibility

Our responsibility is to express opinions on these financial statements based on our audit. We conducted our audit in accordance with auditing standards generally accepted in the United States of America and the standards applicable to financial audits contained in *Government Auditing Standards*, issued by the Comptroller General of the United States. Those standards require that we plan and perform the audit to obtain reasonable assurance about whether the financial statements are free from material misstatement.

An audit involves performing procedures to obtain audit evidence about the amounts and disclosures in the financial statements. The procedures selected depend on the auditor's judgment, including the assessment of the risks of material misstatement of the financial statements, whether due to fraud or error. In making those risk assessments, the auditor considers internal control relevant to the entity's preparation and fair presentation of the financial statements in order to design audit procedures that are appropriate in the circumstances, but not for the purpose of expressing an opinion on the effectiveness of the entity's internal control. Accordingly, we express no such opinion. An audit also includes evaluating the appropriateness of accounting policies used and the reasonableness of significant accounting estimates made by management, as well as evaluating the overall presentation of the financial statements.

We believe that the audit evidence we have obtained is sufficient and appropriate to provide a basis for our audit opinions.

Opinions

In our opinion, the financial statements referred to above present fairly, in all material respects, the respective financial position of the governmental activities, the business-type activities, each major fund, and the aggregate remaining fund information of Lincoln County, Nevada, as of June 30, 2020, and the respective changes in financial position and, where applicable, cash flows thereof, for the year then ended in accordance with accounting principles generally accepted in the United States of America.

Other Matters

Required Supplementary Information

Accounting principles generally accepted in the United States of America require that the Management's Discussion and Analysis on pages 5-13, budgetary comparisons information on pages 63-72, Reconciliation of the General Fund (Budgetary Basis) to the General Fund (GAAP Basis) on page 73, Schedule of Changes in the County's Total OPEB Liability and Related Ratios on page 74, Schedule of the County's Contributions to the Public Employees' Retirement System of the State of Nevada on Page 75, and Schedule of the County's Proportionate Share of the Net Pension Liability Public Employees' Retirement System of the State of Nevada on page 76 be presented to supplement the basic financial statements. Such information, although not a part of the basic financial statements, is required by the Governmental Accounting Standards Board, who considers it to be an essential part of financial reporting for placing the basic financial statements in an appropriate operational, economic, or historical context. We have applied certain limited procedures to the required supplementary information in accordance with auditing standards generally accepted in the United States of America, which consisted of inquiries of management about the methods of preparing the information and comparing the information for consistency with management's responses to our inquiries, the basic financial statements, and other knowledge we obtained during our audit of the basic financial statements. We do not express an opinion or provide any assurance on the information because the limited procedures do not provide us with sufficient evidence to express an opinion or provide any assurance.

Other Information

Our audit for the year ended June 30, 2020 was conducted for the purpose of forming opinions on the financial statements that collectively comprise the County's basic financial statements. The combining and individual fund financial statements and schedules for the year ended June 30, 2020 are presented for purposes of additional analysis and are not a required part of the basic financial statements. Such information is the responsibility of management and was derived from and relates directly to the underlying accounting and other records used to prepare the basic financial statements. The combining and individual fund financial statements and schedules have been subjected to the auditing procedures applied in the audits of the basic financial statements for the year ended June 30, 2020, and certain additional procedures, including comparing and reconciling such information directly to the underlying accounting and other records used to prepare the basic financial statements or to the basic financial statements themselves, and other additional procedures in accordance with auditing standards generally accepted in the United States of America. In our opinion, the combining and individual fund financial statements and schedules are fairly stated in all material respects in relation to the basic financial statements as a whole for the year ended June 30, 2020.

We also previously audited, in accordance with auditing standards generally accepted in the United States of America, the basic financial statements of the County as of and for the year ended June 30, 2019 (not presented herein), and have issued our report thereon dated November 27, 2019, which contained unmodified opinions on the respective financial statements of the governmental activities, the business activities, each major fund, and the aggregate remaining fund information. The combining and individual fund financial statements and schedules for the year ended June 30, 2019, are presented for purposes of additional analysis and are not a required part of the basic financial statements. Such information is the responsibility of management and was derived from and relates directly to the underlying accounting and other records used to prepare the 2019 financial statements. The combining and individual fund financial statements and schedules have been subjected to the auditing procedures applied in the audit 2019 basic financial statements and certain additional procedures, including comparing and reconciling such information directly to the underlying accounting and other records used to prepare those financial statements or to those financial statements themselves, and other additional procedures in accordance with auditing standards generally accepted in the United States of America. In our opinion, the combining and individual fund financial statements and schedules are fairly stated in all material respects in relation to the basic financial statements as a whole for the year ended June 30, 2019.

Other Reporting Required by *Government Auditing Standards*

In accordance with *Government Auditing Standards*, we have also issued our report dated November 25, 2020 on our consideration of the County's internal control over financial reporting and on our tests of its compliance with certain provisions of laws, regulations, contracts, and grant agreements and other matters. The purpose of that report is solely to describe the scope of our testing of internal control over financial reporting and compliance and the results of that testing, and not to provide an opinion on the effectiveness of the County's in internal control over financial reporting or on compliance. That report is an integral part of an audit performed in accordance with *Government Auditing Standards* in considering the County's internal control over financial reporting and compliance.



Las Vegas, Nevada
November 25, 2020

As management of Lincoln County, Nevada, we offer readers of Lincoln County, Nevada's financial statements this narrative overview and analysis of the financial activities of Lincoln County, Nevada, for the fiscal year end June 30, 2020. The Management's Discussion and Analysis ("MD&A") introduces the financial reports for Lincoln County, Nevada. The MD&A is designed to give the reader an easy-to-understand overview of the County's financial position and results of operations for the year. The MD&A is separated into Financial Highlights, an Overview of the Financial Statements, and a Government-Wide Financial Analysis.

Financial Highlights

The assets of the County exceeded its liabilities at the close of the 2020 fiscal year by $36,124,939 (net position). Total net position represents approximately $25,307,570 in capital assets, net of related debt, and $7,732,560 in assets restricted for debt services, capital projects, public works, and for other purposes. The remaining $2,741,182 represents unrestricted net position, which may be used to meet the County's ongoing obligations to its citizens and creditors.

The government-wide net position of the County decreased during the fiscal year 2020 by $134,885, or 0.38%.

At the end of fiscal year 2020, the County's governmental funds reported combined fund balances of $21,526,362; an increase of $1,351,253, or 6.70%, when compared to the previous year.

The County's primary revenue sources for governmental activities were ad valorem (property) taxes of $3,183,017, fuel taxes of $1,731,672, charges for services of $1,290,248, consolidated taxes of $1,546,075, operating grants and contributions of $1,074,896, and federal in lieu taxes of $974,644. These revenue sources comprised 25.14%, 13.68%, 10.19%, 12.21%, 8.49%, and 7.70% respectively, or 77.41%, of total governmental activities revenues. Business-type activities revenue from charges for services was $3,064,200.

The County's total government-wide expenses were $15,201,341. The greatest expenses were in the General Government $3,727,601, Public Works $2,349,771, and Public Safety $2,248,318 functions. Business-type activities contributed $3,384,680 to total expenses.

Overview of the Financial Statements

This discussion and analysis is intended to serve as an introduction to the County's basic financial statements which consists of government-wide financial statements, fund financial statements, and accompanying notes. This report also contains required supplementary information in addition to the basic financial statements.

Government-Wide Financial Statements: The government-wide financial statements are designed to provide readers with a broad overview of the County's finances in a manner similar to a private-sector business.

The Statement of Net Position presents information on all of the County's assets and liabilities with the difference reported as net position. Increases or decreases in net position may serve as a useful indicator of whether the financial position of the County is improving or deteriorating.

Overview of the Financial Statements (Continued)

The Statement of Activities presents information showing how the County's net position changed during the most recent fiscal year. All changes in net position are reported as soon as the underlying event giving rise to the change occurs, regardless of the timing of related cash flows. Thus, revenues and expenses are reported in this statement for some items that will only result in cash flows in future fiscal periods (e.g., uncollected taxes and earned but unused vacation and sick leave).

The government-wide financial statements report two types of activities: governmental activities and business-type activities. The government-wide financial statements distinguish functions of the County that are principally supported by taxes and intergovernmental revenues (governmental activities) from other functions that are intended to recover all or a significant portion of their costs through user fees and charges (business-type activities). The governmental activities of the County include general government, public safety, public works, judicial, health, sanitation, welfare, community support, culture and recreation, and intergovernmental. The business-type activities include operations of its detention center, utilities, solid waste, and building department operations.

Fund Financial Statements: A fund is a grouping of related accounts used to maintain control over resources that have been segregated for specific activities or objectives. The County, like other state and local governments, uses fund accounting to ensure and demonstrate compliance with finance-related legal requirements. All of the funds of the County can be divided into three categories: governmental funds, proprietary funds, and fiduciary funds.

Governmental Funds: Governmental funds are used to account for essentially the same functions reported as governmental activities in the government-wide financial statements. However, unlike the government-wide financial statements, governmental fund financial statements focus on near-term inflows and outflows of spendable resources, as well as on balances of spendable resources available at the end of the fiscal year. Such information may be useful in evaluating the County's near-term financial requirements.

Because the focus of governmental funds is narrower than that of the government-wide financial statements, it is useful to compare the information presented for governmental funds with similar information presented for governmental activities in the government-wide financial statements. By doing so, readers may better understand the long-term impact of the County's near-term financing decisions. Both the governmental fund balance sheet and the governmental fund statement of revenues, expenditures, and changes in fund balances provide a reconciliation to facilitate this comparison between governmental funds and governmental activities.

The County maintains individual governmental funds. Information is presented separately in the governmental balance sheet and the governmental fund statement of revenues, expenditures, and changes in fund balances for the General Fund, Road Fund, Lincoln County Water District Water Resources Fund, Lincoln County Land Act Special Use Fund, and County Grant Fund, each of which is considered to be a major fund. Data from the other governmental funds are combined into a single, aggregated presentation. Individual fund data for each of these nonmajor governmental funds is provided in the combining and individual fund statements and schedules.

The County adopts an annual appropriated budget for each of its governmental funds. A budgetary comparison statement is provided for each of the County's governmental funds to demonstrate compliance with the budget. The budgetary comparison statements for the major governmental funds are presented as required supplementary information; the budgetary comparison statements for all other governmental funds are included in the fund financial statements accompanying information.

Overview of the Financial Statements (Continued)

Proprietary Funds: The County maintains one type of proprietary fund, the Enterprise Fund. The Enterprise Fund is used to report the same functions presented as business-type activities in the government-wide financial statements. The County uses the Enterprise Funds to account for its utility activities, building department activities, solid waste operation, and operation of the detention center.

Proprietary funds provide the same type of information as the government-wide financial statements, only in more detail. The proprietary fund financial statements provide separate information for the utility funds, building department, solid waste, and detention center. The Detention Center and Solid Waste are considered to be major funds of the County.

Fiduciary Funds: Fiduciary funds are used to account for the resources held for the benefit of parties outside of the government; Fiduciary funds are not reported in the government wide financial statements because the resources of those funds are not available to support the County's own programs. The accounting used for fiduciary funds is much like that used for proprietary funds.

The County has two types of fiduciary funds. The Agency Fund reports resources held by the County in a custodial capacity for individuals, private organizations, and other governments. The investment trust fund is an external investment pool operated by the Lincoln County Treasurer.

Notes to Financial Statements: The notes to the financial statements provide additional information that is essential to acquire a full understanding of the data provided in the government-wide and fund financial statements.

Other Information: In addition to the basic financial statements and accompanying notes, this report also presents certain required supplementary information concerning the County's progress in funding its obligation to provide other post-employment benefits to its employees; and schedules of budgetary comparisons for both the original and final budgets of the General Fund and the various other major County funds.

The combining statements and individual fund schedules referred to earlier in connection with the nonmajor governmental funds are presented immediately following the required supplementary information.

Government-Wide Financial Analysis

Net position of the County as of June 30, 2020, is summarized and analyzed below:

Net Position

	Governmental Activities		Business-type Activities		Total Primary Government	
	2020	**2019**	**2020**	**2019**	**2020**	**2019**
Assets:						
Current and other assets	$22,900,634	$21,203,764	$1,849,656	$1,970,803	$24,750,290	$23,174,567
Net capital assets	22,843,095	23,721,612	2,763,346	2,648,451	25,606,441	26,370,063
Total assets	45,743,729	44,925,376	4,613,002	4,619,254	50,356,731	49,544,630
Deferred outflows of resources:						
Deferred pension charge	1,144,436	1,238,859	455,878	521,732	1,600,314	1,760,591
Deferred OPEB	23,141	35,909	5,728	5,286	28,869	41,195
Total deferred outflows	1,167,577	1,274,768	461,606	527,018	1,629,183	1,801,786
Liabilities:						
Current liabilities	1,538,303	1,318,329	479,781	421,150	2,018,084	1,739,479
Long-term liabilities	7,988,396	8,143,723	4,483,951	4,371,952	12,472,347	12,515,675
Total liabilities	9,526,699	9,462,052	4,963,732	4,793,102	14,490,431	14,255,154
Deferred inflows of resources:						
Deferred pension charge	1,259,668	828,844	454,503	346,221	1,714,171	1,175,065
Net position:						
Invested in capital assets, net of related debt	22,721,713	23,607,589	2,585,857	2,460,332	25,307,570	26,067,921
Restricted	7,721,070	6,383,630	11,490	32,238	7,732,560	6,415,868
Unrestricted	5,682,156	5,918,029	(2,940,974)	(2,485,621)	2,741,182	3,432,408
Total net position	$36,124,939	$35,909,248	$ (343,627)	$ 6,949	$35,781,312	$35,916,197

As noted earlier, net assets may serve over time as a useful indicator of the County's financial position. Assets exceeded liabilities by $35,781,312 as of June 30, 2020, and by $35,916,197 as of June 30, 2019, resulting in a net decrease of $134,885, or 0.38%.

A portion of the County's net assets, 70.73%, reflects its investment in capital assets (e.g., land, buildings, machinery and equipment, etc.), net of any related debt outstanding used to acquire those assets. The County uses these capital assets to provide services to citizens; consequently, these assets are not available for future spending. Although the County's investment in its capital assets is reported net of related debt, it should be noted that the resources needed to repay this debt must be provided from other sources, since the capital assets themselves cannot be used to liquidate the debt.

The County's restricted net assets of 21.61% represents resources that are subject to external restrictions on how they may be used.

The remaining portion of the County's net assets, 7.66%, is unrestricted and may be used to meet the County's ongoing obligations to citizens and creditors.

At June 30, 2020, the County had positive balances in all three categories of net assets.

Changes in net position of the County are summarized as follows:

	Governmental Activities		Business-type Activities		Total	
	2020	2019	2020	2019	2020	2019
Revenues:						
Program revenues:						
Charges for services	$ 1,290,248	$ 1,817,359	$ 3,064,200	$ 3,596,448	$ 4,354,448	$ 5,413,807
Operating grants and contributions	1,074,896	1,012,094	-	-	1,074,896	1,012,094
Capital grants and contributions	340,169	519,824	-	-	340,169	519,824
General revenues:						
Ad valorem taxes	3,183,017	3,138,259	-	-	3,183,017	3,138,259
Consolidated taxes	1,546,075	1,508,040	-	-	1,546,075	1,508,040
Fuel taxes	1,731,672	1,843,255	-	-	1,731,672	1,843,255
Federal in lieu taxes	974,644	932,088	-	-	974,644	932,088
Gaming taxes	127,467	132,437	-	-	127,467	132,437
Room taxes	70,479	69,119	-	-	70,479	69,119
Marijuana fees	88,270	88,235	-	-	88,270	88,235
Tax penalties and costs	50,574	59,542	-	-	50,574	59,542
Excess proceeds	24,697	-	-	-	24,697	-
Private car line	-	2	-	-	-	2
Fish and wildlife	3,298	3,794	-	-	3,298	3,794
Rent	135,208	128,997	-	-	135,208	128,997
National forest	14,947	15,140	-	-	14,947	15,140
Water sales	186,503	500	-	-	186,503	500
Coyote Springs GID dissolution	916,307	-	-	-	916,307	-
Investment income (loss)	833,993	593,951	16,092	7,860	850,085	601,811
Other	66,868	47,544	67,687	161,041	134,555	208,585
Total revenues	12,659,332	11,910,180	3,147,979	3,765,349	15,807,311	15,675,529
Expenses:						
General government	3,727,601	3,496,455	-	-	3,727,601	3,496,455
Public safety	2,248,318	1,899,672	-	-	2,248,318	1,899,672
Judicial	1,214,032	1,201,659	-	-	1,214,032	1,201,659
Public works	2,349,771	2,031,104	-	-	2,349,771	2,031,104
Health	371,633	318,285	-	-	371,633	318,285
Welfare	652,626	631,410	-	-	652,626	631,410
Culture and recreation	833,354	806,026	-	-	833,354	806,026
Community support	270,822	263,221	-	-	270,822	263,221
Intergovernmental	127,313	115,979	-	-	127,313	115,979
Other	15,911	6,971	3,384,680	3,521,652	3,400,591	3,528,623
Loss on disposal of assets	5,280	13,556	-	-	5,280	13,556
Total expenses	11,816,661	10,784,338	3,384,680	3,521,652	15,201,341	14,305,990
Change in net position before transfers and special items	842,671	1,125,842	(236,701)	243,697	605,970	1,369,539
Special items	(516,980)	-	(223,875)	-	(740,855)	-
Transfers	(110,000)	(137,500)	110,000	137,500	-	-
Change in net position	215,691	988,342	(350,576)	381,197	(134,885)	1,369,539
Net position - beginning	35,909,248	34,920,906	6,949	(374,248)	35,916,197	34,546,658
Net position - ending	$ 36,124,939	$ 35,909,248	$ (343,627)	$ 6,949	$ 35,781,312	$ 35,916,197

Program revenues include charges for services, fines and forfeitures, certain licenses and permits, and both operating and capital grans and contributions. General revenues consist of taxes, rent, investment income, and miscellaneous.

Financial Analysis of the County's Governmental Funds

The County uses fund accounting to ensure and demonstrate compliance with finance-related legal requirements.

Governmental Funds

As of the end of the current fiscal year, the County's governmental funds reported a combined ending fund balance of $21,526,362, an increase of $1,351,253, or 6.70%, from the prior year. Fund balance components have been classified as nonspendable, restricted, committed, assigned and/or unassigned based primarily on the extent to which the County is bound to observe constraints imposed on the use of the resources of each fund. Restricted fund balance is $7,721,070, or 35.87% of total. Spending of these resources is constrained by externally imposed (statutory, bond covenant, or grantors) limitations on their use. The largest restricted fund balances include $903,800 for multi-species conservation, $1,495,711 for capital projects, and $1,732,809 for public works.

Committed and assigned fund balances combined to represent 63.96% of total fund balance with spending constrained by either the Board of County Commissioners (for committed) or senior management (for assigned). Committed balances in the special revenue funds are primarily due to revenues directed by the Commission to those funds to support programs. The largest committed fund balances include $3,482,561 for the Lincoln County Water District and $3,565,468 for Lincoln County Land Act.

Major Funds

General Fund (Budgetary Basis): The General Fund is the chief operating fund of the County. At the end of the current fiscal year, the fund balance (budgetary basis) of the General Fund was $2,340,945, an increase of $1,387,742, or 145.59%. The General Fund revenues increased by $986,184, or 20.50%. Taxes increased by $28,483, or 1.27%. Intergovernmental increased by $927,602, or 55.30% due to the Coyote Springs dissolution. Charges for services increased by $60,644, or 20.51%, due to increased security contract and recorder fees. Fines and forfeitures decreased $107,353, or 29.66%. Miscellaneous revenues increased $76,429, or 35.70%, mostly due to increase investment income.

Expenditures decreased by $13,242, or 0.30%. General government expenditures decreased by $32,302, or 2.15% due to a decrease in grant administrator and clerk costs. Public safety expenditures increased by $33,974, or 2.00%, due to an increase in service and supplies for the sheriff's office. Judicial expenditures decreased by $24,403, or 2.17% due to a decrease in juvenile officers' wages and benefits.

Road Fund: The fund balance for the fund decreased by $73,505 to $801,769, or 8.40%. The Road fund expenditures increased by $204,973, or 28.76%, due to an increase in wages, benefits and services and supplies expenditures.

Lincoln County Water District Water Resources Fund: The Lincoln County Water District Water Resources Fund balance decreased by $60,028, or 2.11%, from the prior year. This was due to a transfer of $200,000 to the Water District General Fund.

Lincoln County Land Act Special Use Fund: The Lincoln County Land Act Special Use Fund balance decreased by $442,299, or 11.46% from the prior year. This was due to an increase in costs related to the Storm Area 51 event and compensated absence payments related to a reduction in staffing.

County Grant Fund: The County Grant Fund revenues decreased by $203,984, or 18.23%, and expenditures decreased by $151,891, or 13.46%. The decreases were due to receiving less grant monies in the current year.

Financial Analysis of the County's Enterprise Funds

Enterprise Funds provide the same type of information found in the government-wide financial statements, but in more detail. Unrestricted net position of the enterprise funds was a deficit of $2,940,974. Total net position for these funds decreased by $350,576 from the prior year.

The **Detention Center Fund**, a major fund, had operating revenues increase by $5,765, or 0.31%, due to an increase in inmate fees. Operating expenses increased by $212,785, or 11.12% due to an increase in salaries and benefits.

The **Solid Waste Fund**, a major fund, had operating revenues decrease by $27,385, or 4.29%, during the year. Operating expenses increased by $48,274, or 9.44%, due to an increase in depreciation expense due to the purchase of new equipment in the prior and current year.

General Fund Budgetary Highlights

The original budget (2019-20 Final Budget) was approved May 20, 2019.

Original budget compared to final budget: During the year there was a need for an amendment to increase original estimated revenues and original budgeted appropriations. There was also a need to make an amendment to reallocate appropriations among departments when it became clearer which departments would actually be charged for certain expenses. Generally, the movement of the appropriations between departments was not significant.

Final budget compared to actual results: The most significant differences for the General Fund were as follows:

Overall, the revenues received were more than budgeted by 19.68% or $953,017. Revenues received in excess of budgeted amounts were 52.94% for intergovernmental, 428.26% for miscellaneous, and 16.23% for licenses and permits. The shortfall in revenue sources was 2.40% for taxes, 6.83% for charges for services, and 29.27% for fines and forfeitures.

A review of actual expenditures compared to the appropriations in the final budget shows expenditures were $493,120 less than budgeted or 10.16%. Expenditures were under budget for all functions of the General Fund - general government 13.86%, public safety 4.50%, judicial 13.73%, and health 0.94%.

Actual fund balance (budgetary basis) of $2,340,945, was $154,352 lower than anticipated to begin the 2020-2021 year.

Capital Assets and Debt Administration

Capital Assets
The County's investment in capital assets, net of accumulated depreciation, at June 30, 2020, was $22,843,095 in governmental activities and $2,763,346 in business-type activities. A summary of changes in capital assets for the year ended June 30, 2020, follows:

Capital Assets (Continued)

Governmental Activities:

	Balance June 30, 2019	Additions	Dispositions	Balance June 30, 2020
Capital assets not being depreciated:				
Land	$ 1,809,860	$ -	$ -	$ 1,809,860
Capital assets being depreciated:				
Building and improvements	23,738,032	269,597	-	24,007,629
Infrastructure	2,150,970	-	-	2,150,970
Equipment	10,193,973	397,140	(1,658,209)	8,932,904
Total capital assets being depreciated	36,082,975	666,737	(1,658,209)	35,091,503
Less accumulated depreciation for:				
Building and improvements	7,894,600	863,884	-	8,758,484
Infrastructure	373,820	43,019	-	416,839
Equipment	5,902,803	428,944	(1,448,802)	4,882,945
Total accumulated depreciation	14,171,223	1,335,847	(1,448,802)	14,058,268
Total capital assets being depreciated, net	21,911,752	(669,110)	(209,407)	21,033,235
Governmental activities assets, net	$ 23,721,612	$ (669,110)	$ (209,407)	$ 22,843,095

Business-type Activities:

	Balance June 30, 2019	Additions	Dispositions	Balance June 30, 2020
Capital assets not being depreciated:				
Land	$ 214,000	$ -	$ -	$ 214,000
Capital assets being depreciated:				
Building and improvements	1,374,844	-	-	1,374,844
Utility system	1,435,264	11,776	(63,638)	1,383,402
Equipment	1,755,899	475,933	(333,412)	1,898,420
Total capital assets being depreciated	4,566,007	487,709	(397,050)	4,656,666
Less accumulated depreciation for:				
Building and improvements	427,586	44,175	-	471,761
Utility system	699,613	28,486	(7,674)	720,425
Equipment	1,004,357	106,358	(195,581)	915,134
Total accumulated depreciation	2,131,556	179,019	(203,255)	2,107,320
Total capital assets being depreciated, net	2,434,451	308,690	(193,795)	2,549,346
Business-type activities assets, net	$ 2,648,451	$ 308,690	$ (193,795)	$ 2,763,346

Major capital asset events during the current fiscal year included the following:

- Building and other improvements for the Airport and Trap Range.
- Equipment for the sheriff, general government, and other culture and recreation equipment.

Debt Administration

Changes in Long-term Debt: During the year ended June 30, 2020, the following changes occurred in long-term debt:

Governmental activities:

	Balance June 30, 2019	Net Additions	Net Deletions	Balance June 30, 2020	Due within One Year
Compensated absences	$ 422,068	$ -	$ 1,907	$ 420,161	$ 236,131
Net pension liability	7,600,013	-	235,186	7,364,827	-
OPEB obligation payable	334,948	71,150	-	406,098	-
Note payable	24,157	-	24,157	-	-
Capital lease payable	86,065	100,300	77,642	108,723	75,282
Total	$ 8,467,251	$ 171,450	$ 338,892	$ 8,299,809	$ 311,413

Business-type activities:

	Balance June 30, 2019	Net Additions	Net Deletions	Balance June 30, 2020	Due within One Year
Compensated absences	$ 227,116	$ -	$ 48,358	$ 178,758	$ 102,835
Net pension liability	3,615,370	-	263,416	3,351,954	-
OPEB obligation payable	93,697	21,209	-	114,906	-
Landfill closure and postclosure costs	60,000	20,000	-	80,000	-
Bond payable	188,119	-	10,630	177,489	3,440
Total	$ 4,184,302	$ 41,209	$ 322,404	$ 3,903,107	$ 106,275

The County's debt decreased by $167,442 for governmental activities during the current fiscal year. The reductions were mainly from a decrease in net pension liability.

The County's debt decreased by $281,195 for business-type activities during the current fiscal year. The primary reason for the decrease was a reduction in estimated compensated absences and net pension liability.

Additional information on the County's long-term debt can be found in (**Note D6**).

ECONOMIC FACTORS AND NEXT YEAR'S BUDGET AND RATES

The County approved the budget for the 2020-2021 year on May 18, 2020. The following factors were considered in the development of the budget.

- Assessed valuation for the County decreased and tax rates remained unchanged.
- The County, in planning for the budget year ending June 30, 2021, considered the implications of the Coronavirus (COVID-19) on County operations. Adjustments were made to the budget based on information known at the time of budget approval.

REQUESTS FOR INFORMATION

This financial report is designed to provide its users with a general overview of Lincoln County, Nevada's finances and to demonstrate the County's accountability for the revenues it receives. Any comments, further questions, or requests for additional information should be addressed to:

County Administration - Lincoln County, Nevada
PO Box 218
Pioche, Nevada 89043

BASIC FINANCIAL STATEMENTS

LINCOLN COUNTY, NEVADA
STATEMENT OF NET POSITION
June 30, 2020

	Primary Government		
	Governmental Activities	Business-type Activities	Total
Assets:			
Cash and cash equivalents	$ 20,891,915	$ 1,440,206	$ 22,332,121
Interest receivable	55,632	984	56,616
Taxes receivable	51,573	-	51,573
Special assessment receivable	79,764	-	79,764
Due from other governments	989,056	-	989,056
Due from others	20,128	-	20,128
Prepaid expense	33,554	-	33,554
Accounts receivable	-	313,689	313,689
Inventory	8,091	-	8,091
Interfund receivable	770,921	-	770,921
Restricted assets- Cash	-	94,777	94,777
Capital assets net of accumulated depreciation	22,843,095	2,763,346	25,606,441
Total assets	45,743,729	4,613,002	50,356,731
Deferred outflows of resources:			
Deferred pension charge	1,144,436	455,878	1,600,314
Deferred OPEB	23,141	5,728	28,869
Total deferred outflows of resources	1,167,577	461,606	1,629,183
Liabilities:			
Accounts payable	486,383	34,857	521,240
Accrued payroll and benefits	511,106	245,295	756,401
Customer deposits	-	90	90
Unearned revenue	216,742	-	216,742
Interest payable	12,659	9,462	22,121
Current portion of liabilities due within one year:			
Accrued compensated absences	236,131	102,835	338,966
Interfund payable	-	83,802	83,802
Lease payable	75,282	-	75,282
Current portion of liabilities payable from restricted assets:			
Bond payable	-	3,440	3,440
Long-term liabilities due or payable after one year:			
Accrued compensated absences	184,030	75,923	259,953
Landfill closure and postclosure costs	-	80,000	80,000
Interfund payable	-	687,119	687,119
Net pension liability	7,364,827	3,351,954	10,716,781
OPEB liability	406,098	114,906	521,004
Bond payable	-	174,049	174,049
Lease payable	33,441	-	33,441
Total liabilities	9,526,699	4,963,732	14,490,431
Deferred inflows of resources:			
Deferred pension charge	1,259,668	454,503	1,714,171
Net position:			
Invested in capital assets, net of debt	22,721,713	2,585,857	25,307,570
Restricted	7,721,070	11,490	7,732,560
Unrestricted	5,682,156	(2,940,974)	2,741,182
Total net position	$ 36,124,939	$ (343,627)	$ 35,781,312

The notes to the financial statements are an integral part of this statement.

LINCOLN COUNTY, NEVADA
STATEMENT OF ACTIVITIES
June 30, 2020

Functions/Programs	Expenses	Program Revenues: Charges for Services	Program Revenues: Operating Grants and Contributions	Program Revenues: Capital Grants and Contributions	Changes in Net Position: Governmental Activities	Changes in Net Position: Business-type Activities	Total
Primary governments:							
General government	$ (3,727,601)	$ 502,576	$ 402,788	$ -	$ (2,822,237)	$ -	$ (2,822,237)
Public safety	(2,248,318)	198,607	259,565	34,900	(1,755,246)	-	(1,755,246)
Judicial	(1,214,032)	363,150	-	-	(850,882)	-	(850,882)
Public works	(2,349,771)	66,542	19,292	105,914	(2,158,023)	-	(2,158,023)
Health	(371,633)	134,391	10,231	-	(227,011)	-	(227,011)
Welfare	(652,626)	-	196,402	46,472	(409,752)	-	(409,752)
Culture and recreation	(833,354)	-	21,563	152,883	(658,908)	-	(658,908)
Community support	(270,822)	24,982	165,055	-	(80,785)	-	(80,785)
Intergovernmental	(127,313)	-	-	-	(127,313)	-	(127,313)
Interest on long-term debt	(15,911)	-	-	-	(15,911)	-	(15,911)
Total governmental activities	(11,811,381)	1,290,248	1,074,896	340,169	(9,106,068)	-	(9,106,068)
Business-type activities:							
Building Department	(72,452)	22,144	-	-	-	(50,308)	(50,308)
Detention Center	(2,127,085)	1,873,065	-	-	-	(254,020)	(254,020)
Landfill	(559,611)	610,739	-	-	-	51,128	51,128
Pioche Public Utility	(625,532)	558,252	-	-	-	(67,280)	(67,280)
Total business-type activities	(3,384,680)	3,064,200	-	-	-	(320,480)	(320,480)
Total primary governments	$(15,196,061)	$4,354,448	$ 1,074,896	$ 340,169	(9,106,068)	(320,480)	(9,426,548)
General Revenues:							
Property taxes					3,183,017	-	3,183,017
Consolidated taxes					1,546,075	-	1,546,075
Fuel tax					1,731,672	-	1,731,672
Federal in-lieu tax					974,644	-	974,644
Gaming tax					127,467	-	127,467
Room tax					70,479	-	70,479
Marijuana fees					88,270	-	88,270
Tax penalties and costs					50,574	-	50,574
Excess proceeds					24,697	-	24,697
Fish and wildlife					3,298	-	3,298
Rent					135,208	-	135,208
National forest					14,947	-	14,947
Water sales					186,503	-	186,503
Coyote Springs GID dissolution					916,307	-	916,307
Loss on disposal of assets					(5,280)	-	(5,280)
Investment income (loss)					833,993	16,092	850,085
Miscellaneous					66,868	-	66,868
Capital fees					-	56,612	56,612
Custom fees					-	11,075	11,075
Special items					(516,980)	(223,875)	(740,855)
Operating transfers					(110,000)	110,000	-
Total general revenues and transfers					9,321,759	(30,096)	9,291,663
Change in net position					215,691	(350,576)	(134,885)
Net position - beginning of year					35,909,248	6,949	35,916,197
Net position - end of year					$ 36,124,939	$ (343,627)	$35,781,312

The notes to the financial statements are an integral part of this statement

LINCOLN COUNTY, NEVADA
BALANCE SHEET
GOVERNMENTAL FUNDS
June 30, 2020

	Major Funds						
	General Fund	Road Fund	Lincoln County Water District Water Resources	Lincoln County Land Act Special Use	County Grant	**Other Governmental Funds**	Totals
ASSETS							
Pooled cash and investments	$ 2,989,418	$ 680,946	$ 2,768,999	$ 2,997,926	$ 47,488	$ 11,407,138	$ 20,891,915
Interest receivable	7,729	1,068	$ 12,183	5,718	159	28,775	55,632
Taxes receivable	30,333	-	-	-	-	21,240	51,573
Special assessment receivable	-	-	-	-	-	79,764	79,764
Due from other governments	291,829	246,465	-	-	368,298	82,464	989,056
Due from others	-	-	-	-	-	20,128	20,128
Inventory	-	-	-	-	-	8,091	8,091
Prepaid expense	-	-	-	-	-	33,554	33,554
Interfund receivable	-	-	-	600,921	-	170,000	770,921
Total assets	$ 3,319,309	$ 928,479	$ 2,781,182	$ 3,604,565	$ 415,945	$ 11,851,154	$ 22,900,634
LIABILITIES							
Accounts payable	$ 76,882	$ 75,835	$ -	$ -	$ 95,871	$ 237,795	$ 486,383
Accrued payroll and benefits	220,587	50,875	-	186,817	19,422	33,405	511,106
Unearned revenues	-	-	-	-	120,912	95,830	216,742
Total liabilities	297,469	126,710	-	186,817	236,205	367,030	1,214,231
DEFERRED INFLOWS OF RESOURCES							
Unavailable revenue - property taxes	26,513	-	-	-	-	12,022	38,535
Unavailable revenue - grant	-	-	-	-	121,506	-	121,506
Total deferred inflows of resources	26,513	-	-	-	121,506	12,022	160,041
FUND BALANCE							
Nonspendable	-	-	-	-	-	40,091	40,091
Restricted for:							
Capital projects	-	-	-	-	-	1,495,711	1,495,711
Unincorporated towns	-	-	-	-	-	347,694	347,694
Multi-species conservation	-	-	-	-	-	903,800	903,800
Stabilization	137,113	-	-	-	-	-	137,113
Rachel Jones Cemetery	827	-	-	-	-	-	827
General government	357,965	-	-	-	-	71,619	429,584
Coyote Springs GID dissolution	916,307	-	-	-	-	-	916,307
Public safety	-	-	-	-	-	51,290	51,290
Judicial	-	-	-	-	-	286,906	286,906
Public works	-	801,769	-	-	-	931,040	1,732,809
Health	-	-	-	-	-	167	167
Welfare	-	-	-	-	-	889,039	889,039
Culture and recreation	-	-	-	-	-	267,951	267,951
Community support	-	-	-	-	-	258,275	258,275
Intergovernmental	-	-	-	-	-	3,597	3,597
Committed for:							
Land act	9,408	-	-	3,417,748	-	138,312	3,565,468
Water	66,451	-	-	-	-	2,864,529	2,930,980
Lincoln County Water District	-	-	2,781,182	-	-	701,379	3,482,561
General government	-	-	-	-	58,234	2,166,944	2,225,178
Public works	-	-	-	-	-	23,382	23,382
Health	-	-	-	-	-	33,571	33,571
Planning	43,603	-	-	-	-	-	43,603
Flood control	39,015	-	-	-	-	-	39,015
Assigned for:							
Subsequent year	1,424,638	-	-	-	-	-	1,424,638
Unassigned:	-	-	-	-	-	(3,195)	(3,195)
Total fund balance	2,995,327	801,769	2,781,182	3,417,748	58,234	11,472,102	21,526,362
Total liabilities, deferred inflows of resources, and fund balance	$ 3,319,309	$ 928,479	$ 2,781,182	$ 3,604,565	$ 415,945	$ 11,851,154	$ 22,900,634

The notes to the financial statements are an integral part of this statement.

LINCOLN COUNTY, NEVADA
RECONCILIATION OF THE GOVERNMENTAL FUNDS BALANCE SHEET
TO THE STATEMENT OF NET POSITION
June 30, 2020

Total fund balance - governmental funds	**$**	**21,526,362**
Amounts reported for governmental activities in the Statement of Net Position are different because:		
Capital assets, net of the related depreciation, are not reported in the Governmental Funds financial statements because they are not current financial resources, but they are reported in the Statement of Net Position.		22,843,095
Other long-term assets which are not available to pay for current period expenditures and, therefore, are deferred in the funds.		160,041
Certain liabilities (such as bonds payable and capital leases payable) are not reported in the Governmental Funds financial statements because they are not due and payable, but they are presented as liabilities in the Statement of Net Position.		(541,543)
The County's other post-employment benefits liabilities as well as other post-employment benefits-related deferred outflows and deferred inflows of resources are recognized in the government-wide statements and include:		
Deferred outflows from other post-employment benefits.		23,141
Total other post-employment benefits liability.		(406,098)
The County's proportionate share of net pension assets and liabilities as well as pension-related deferred outflows and deferred inflows of resources are recognized in the government-wide statements and include:		
Deferred outflows from pension activity		1,144,436
Net pension liability		(7,364,827)
Deferred inflows from pension activity		(1,259,668)
Total net position - governmental activities	**$**	**36,124,939**

The notes to the financial statements are an integral part of this statement.

LINCOLN COUNTY, NEVADA
STATEMENT OF REVENUES, EXPENDITURES,
AND CHANGES IN FUND BALANCES
GOVERNMENTAL FUNDS
Year Ended June 30, 2020

	Major Funds						
	General Fund	Road Fund	Lincoln County Water District Water Resources	Lincoln County Land Act Special Use	County Grant	**Other Governmental Funds**	Totals
Revenues:							
Taxes	$ 2,268,713	$ -	$ -	$ -	$ -	$ 983,903	$ 3,252,616
Licenses and permits	21,096	-	-	-	-	4,855	25,951
Intergovernmental	2,605,091	1,623,351	-	10,871	915,171	1,564,939	6,719,423
Charges for services	371,207	-	-	-	-	615,490	986,697
Fines and forfeitures	254,615	-	-	-	-	30,503	285,118
Special assessment	-	-	-	-	-	186,003	186,003
Miscellaneous	320,823	17,464	139,972	130,986	1,321	470,572	1,081,138
Total revenues	5,841,545	1,640,815	139,972	141,857	916,492	3,856,265	12,536,946
Expenditures:							
Current:							
General government	1,545,191	-	-	584,307	335,427	1,183,637	3,648,562
Public safety	1,731,728	-	-	-	234,932	39,935	2,006,595
Judicial	1,098,278	-	-	-	-	112,845	1,211,123
Public works	83,622	1,615,320	-	-	125,206	75,228	1,899,376
Health	61,876	-	-	-	-	252,704	314,580
Welfare	-	-	-	-	106,227	524,842	631,069
Culture and recreation	-	-	-	-	174,446	345,391	519,837
Community support	-	-	-	-	-	247,029	247,029
Intergovernmental	-	-	-	-	-	127,313	127,313
Capital projects	-	-	-	-	-	148,804	148,804
Debt service:							
Principal	-	-	-	-	-	101,799	101,799
Interest	-	-	-	-	-	7,053	7,053
Total expenditures	4,520,695	1,615,320	-	584,307	976,238	3,166,580	10,863,140
Excess (deficiency) of revenues over expenditures	1,320,850	25,495	139,972	(442,450)	(59,746)	689,685	1,673,806
Other financing sources (uses):							
Operating transfers in	75,000	-	-	151	53,835	563,811	692,797
Operating transfers out	(50,000)	(100,000)	(200,000)	-	-	(452,797)	(802,797)
Sale of capital assets	-	1,000	-	-	-	-	1,000
Capital lease proceeds	-	-	-	-	-	100,300	100,300
Total other financing sources (uses)	25,000	(99,000)	(200,000)	151	53,835	211,314	(8,700)
Net change in fund balance before special items	1,345,850	(73,505)	(60,028)	(442,299)	(5,911)	900,999	1,665,106
Special items:							
Disposal of Tri-County Weed Control	-	-	-	-	-	(313,853)	(313,853)
Net change in fund balance	1,345,850	(73,505)	(60,028)	(442,299)	(5,911)	587,146	1,351,253
Fund balance:							
Beginning of year	1,649,477	875,274	2,841,210	3,860,047	64,145	10,884,956	20,175,109
End of year	$ 2,995,327	$ 801,769	$ 2,781,182	$ 3,417,748	$ 58,234	$ 11,472,102	$ 21,526,362

The notes to the financial statements are an integral part of this statement.

LINCOLN COUNTY, NEVADA
RECONCILIATION OF THE STATEMENT OF REVENUES, EXPENDITURES AND CHANGES IN FUND BALANCES OF GOVERNMENTAL FUNDS TO THE STATEMENT OF ACTIVITIES
Year Ended June 30, 2020

Net Change in Fund Balance - Governmental Funds	**$**	**1,351,253**
Amounts reported for governmental activities in the Statement of Activities are different because:		
Capital outlays to purchase or build capital assets are reported in Governmental Funds financial statements as expenditures. However, for governmental activities those costs are shown in the Statement of Net Position and allocated over the estimated useful lives as annual depreciation expenses in the Statement of Activities.		(878,517)
Property taxes and grant revenues that are collected in the time to pay obligations of the current period are reported as revenue in the fund statements. However, amounts that related to prior periods that first become available in the current period should not be reported as revenue in the statement of activities.		122,386
The issuance of long-term debt (e.g., bonds, leases) provides current financial resources to governmental funds, while the repayment of the principal of long-term debt consumes the current financial resources of governmental funds. Neither transaction, however, has any effect on net position. Also, governmental funds report the effect of issuance costs, premiums, discounts, and other similar items when debt is first issued, whereas these amounts are deferred and amortized in the Statement of Activities. This amount is the net effect of these differences in the treatment of long-term debt and related items.		(6,951)
Generally, expenditures recognized in the fund financial statements are limited to only those that use current financial resources, but expenses are recognized in the statement of activities when incurred.		1,499
Net differences between other post-employment benefits contributions recognized in the fund statement of revenues, expenditures, and changes in fund balances and the Statement of Activities:		
Other post-employment benefits contributions made after measurement date (2020 contributions).		23,141
Net other post-employment benefits expense.		(107,059)
Net differences between pension system contributions recognized in the fund statement of revenues, expenditures, and changes in fund balances and the statement of activities:		
Pension contributions made after measurment date (2020 contributions).		447,504
Net pension expense.		(737,565)
Change in net position of governmental activities	**$**	**215,691**

The notes to the financial statements are an integral part of this statement.

LINCOLN COUNTY, NEVADA
STATEMENT OF NET POSITION
PROPRIETARY FUNDS
June 30, 2020

	Major Fund		Nonmajor Enterprise Funds	Total Enterprise Funds
	Detention Center	Solid Waste		
ASSETS				
Current assets:				
Pooled cash and investments	$ 59,969	$ 640,194	$ 740,043	$ 1,440,206
Accounts receivable	148,575	131,219	33,895	313,689
Interest receivable	-	133	851	984
Total current assets	208,544	771,546	774,789	1,754,879
Restricted assets:				
Cash	-	83,287	11,490	94,777
Capital assets:				
Land	-	200,000	14,000	214,000
Property, plant and equipment (net of depreciation)	787,218	771,259	990,869	2,549,346
Total capital assets	787,218	971,259	1,004,869	2,763,346
Total assets	995,762	1,826,092	1,791,148	4,613,002
DEFERRED OUTFLOWS OF RESOURCES				
Deferred pension charge	399,544	20,066	36,268	455,878
Deferred OPEB	-	-	5,728	5,728
Total deferred outflows of resources	399,544	20,066	41,996	461,606
LIABILITIES				
Current liabilities:				
Accounts payable	11,194	7,525	16,138	34,857
Accrued payroll and benefits	212,007	17,898	15,390	245,295
Customer deposits	-	-	90	90
Accrued compensated absences	77,624	8,702	16,509	102,835
Interfund payable	-	83,802	-	83,802
Accrued interest payable	-	8,174	1,288	9,462
Total current liabilities	300,825	126,101	49,415	476,341
Current liabilities payable from restricted assets:				
Revenue bond	-	-	3,440	3,440
Non-current liabilities:				
Accrued compensated absences	56,210	5,801	13,912	75,923
Landfill closure and postclosure costs	-	80,000	-	80,000
Interfund payable	-	687,119	-	687,119
Net pension liability	3,126,874	-	225,080	3,351,954
OPEB liability	-	-	114,906	114,906
Revenue bond	-	-	174,049	174,049
Total non-current liabilities	3,183,084	772,920	527,947	4,483,951
Total liabilities	3,483,909	899,021	580,802	4,963,732
DEFERRED INFLOWS OF RESOURCES				
Deferred pension charge	414,682	3,749	36,072	454,503
NET POSITION				
Invested in capital assets, net of related debt	787,218	971,259	827,380	2,585,857
Restricted for revenue bond debt service	-	-	11,490	11,490
Unrestricted	(3,290,503)	(27,871)	377,400	(2,940,974)
Total net position	$ (2,503,285)	$ 943,388	$ 1,216,270	$ (343,627)

The notes to the financial statements are an integral part of this statement.

LINCOLN COUNTY, NEVADA
STATEMENT OF REVENUES, EXPENSES, AND CHANGES IN NET POSITION
PROPRIETARY FUNDS
For the Year Ended June 30, 2020

	Major Fund		Nonmajor	Total
	Detention Center	Solid Waste	Enterprise Funds	Enterprise Funds
Operating revenues:				
Charges for services	$ 1,873,065	$ 610,739	$ 580,396	$ 3,064,200
Operating expenses:				
Salaries and wages	1,121,479	241,228	166,118	1,528,825
Employee benefits	642,605	95,898	119,389	857,892
Services and supplies	318,714	109,723	345,985	774,422
Closure and postclosure landfill costs	-	20,000	-	20,000
Depreciation	44,287	92,762	41,970	179,019
Total operating expenses	2,127,085	559,611	673,462	3,360,158
Operating income (loss)	(254,020)	51,128	(93,066)	(295,958)
Non-operating revenues (expenses):				
Investment income	-	2,169	13,923	16,092
Operating transfers in	60,000	-	50,000	110,000
Capital fees	-	-	56,612	56,612
Custom fees	-	-	11,075	11,075
Interest expense	-	(15,363)	(9,159)	(24,522)
Total non-operating revenues (expenses)	60,000	(13,194)	122,451	169,257
Change in net position before special items	(194,020)	37,934	29,385	(126,701)
Special items:				
Sale of electric operations:	-	-	(223,875)	(223,875)
Change in net position	(194,020)	37,934	(194,490)	(350,576)
Net position:				
Beginning of year	(2,309,265)	905,454	1,410,760	6,949
End of year	$ (2,503,285)	$ 943,388	$ 1,216,270	$ (343,627)

The notes to the financial statements are an integral part of this statement.

LINCOLN COUNTY, NEVADA
STATEMENT OF CASH FLOWS
PROPRIETARY FUNDS
For the Year Ended June 30, 2020

	Major Fund		Nonmajor	Total
	Detention Center	Solid Waste	Enterprise Funds	Enterprise Funds
Cash flows from operating activities:				
Cash received from customers	$ 1,885,294	$ 621,574	$ 623,966	$ 3,130,834
Cash paid for services and supplies	(329,385)	(112,758)	(369,504)	(811,647)
Cash paid for salaries and benefits	(1,690,694)	(336,042)	(428,924)	(2,455,660)
Net cash provided (used) by operating activities	(134,785)	172,774	(174,462)	(136,473)
Cash flows from noncapital financing activities:				
Operating transfers in/out	60,000	-	50,000	110,000
Cash flows from capital and related financing activities: financing activities:				
Purchases of capital assets	-	(475,933)	(11,775)	(487,708)
Capital fees	-	-	56,612	56,612
Custom fees	-	-	11,075	11,075
Interfund payable	-	410,921	-	410,921
Debt retirement	-	-	(10,630)	(10,630)
Interest paid	-	(7,189)	(9,183)	(16,372)
Net cash provided (used) by capital and related financing activities	-	(72,201)	36,099	(36,102)
Cash flows from investing activities:				
Investment income	-	2,169	13,830	15,999
Net change in cash and cash equivalents	(74,785)	102,742	(74,533)	(46,576)
Cash:				
Beginning of year	134,754	620,739	826,066	1,581,559
End of year	$ 59,969	$ 723,481	$ 751,533	$ 1,534,983
Reconciliation of operating income (loss) to net cash provided (used) by operating activities:				
Operating income (loss)	$ (254,020)	$ 51,128	$ (93,066)	$ (295,958)
Adjustments to reconcile operating income (loss) to net cash provided (used) by operating activities:				
Depreciation expense	44,287	92,762	41,970	179,019
(Increase) decrease in accounts receivable	12,229	10,835	51,600	74,664
Increase (decrease) in accounts payable	(10,671)	(3,035)	(23,519)	(37,225)
Increase (decrease) in accrued payroll and benefits	80,371	2,053	(4,415)	78,009
Increase (decrease) in compensated absences	(42,831)	361	(5,888)	(48,358)
Increase (decrease) in land fill costs	-	20,000	-	20,000
Increase (decrease) in net pension liability	(120,876)	-	(142,540)	(263,416)
Increase (decrease) in net pension expense	156,726	(1,330)	18,740	174,136
Increase (decrease) in OPEB liability	-	-	21,209	21,209
Increase (decrease) in OPEB pension expense	-	-	(442)	(442)
Increase (decrease) in customer deposits	-	-	(8,030)	(8,030)
Loss on special and extraordinary items	-	-	(30,081)	(30,081)
Total adjustments	119,235	121,646	(81,396)	159,485
Net cash provided (used) by operating activities	$ (134,785)	$ 172,774	$ (174,462)	$ (136,473)

The notes to the financial statements are an integral part of this statement.

LINCOLN COUNTY, NEVADA
FIDUCIARY FUNDS
STATEMENT OF NET POSITION
June 30, 2020

	Investment Trust Fund	Agency
ASSETS		
Pooled cash and investments	$ 3,196,587	$ 930,646
Interest receivable	-	10,581
Taxes receivable	-	53,145
Due from other governments	-	59,956
Total assets	$ 3,196,587	$ 1,054,328
LIABILITIES		
Amount held for others	$ -	$ 1,007,232
Unavailable revenue - taxes	-	47,096
Total liabilities	-	1,054,328
NET POSITION		
Held in trust for pool participants	$ 3,196,587	$ -

The notes to the financial statements are an integral part of this statement.

LINCOLN COUNTY, NEVADA
FIDUCIARY FUNDS
STATEMENT OF CHANGES IN FIDUCIARY NET POSITION
June 30, 2020

	Investment Trust Fund
Additions:	
Investment earnings	$ 132,452
Net change in fair value of investments	-
Total additions	132,452
Capital share transactions	(726,567)
Change in net position	(594,115)
Net position:	
Beginning of year	3,790,702
End of year	$ 3,196,587

The notes to the financial statements are an integral part of this statement.

NOTE A. SUMMARY OF SIGNIFICANT ACCOUNTING POLICIES

The County financial statements are prepared in accordance with generally accepted accounting principles (GAAP). The Governmental Accounting Standards Board (GASB) is responsible for establishing GAAP for state and local governments through its pronouncements (Statements and Interpretations).

1. Reporting Entity

Lincoln County, Nevada, is governed by an elected five-member board. As required by generally accepted accounting principles, these financial statements present Lincoln County, Nevada (the primary government), and its component units. Blended component units, although legally separate entities are, in substance, part of the County's operations. Thus, blended component units are appropriately presented as funds of the primary government.

2. Blended Component Units

Component units are legally separate organizations for which the County is financially accountable. Lincoln County Water District, Alamo Town, Panaca Town, and Pioche Town are all component units that are part of the County's reporting entity because the County is financially accountable for these entities. Financial accountability is determined primarily by the fact that as the governing body, the County's Board of Commissioners can impose its will on significant aspects of the operations of these entities. These entities are presented as blended component units since the operations of these entities are considered part of County operations.

3. Description of Government-Wide Financial Statements

The government-wide financial statements (i.e., the statement of net position and the statement of activities) report information on all of the nonfiduciary activities of the County and its component units. All fiduciary activities are reported only in the fund financial statements. *Governmental activities,* which normally are supported by taxes, intergovernmental revenues, and other nonexchange transactions, are reported separately from *business-type activities*, which rely to a significant extent on fees and charges to external customers for support.

4. Basis of Presentation - Government-wide Financial Statements

While separate government-wide and fund financial statements are presented, they are interrelated. The governmental activities column incorporates data from governmental funds, while business-type activities incorporate data from the County's enterprise funds. Separate financial statements are provided for governmental funds, proprietary funds (enterprise funds), and fiduciary funds, even though the fiduciary funds are excluded from the government-wide financial statements. As a general rule, the effect of interfund activity has been eliminated from the government-wide financial statements.

The Statement of Net Position presents the consolidated financial position of the County at year-end, in separate columns, for both governmental and business-type activities.

The Statement of Activities demonstrates the degree to which the direct expenses of a given function or programs are offset by program revenues. Direct expenses are those that are specifically associated with a program or service and are, therefore, clearly identifiable to a particular function. Amounts reported as program revenues include 1) charges to customers or applicants who purchase, use, or directly benefit from goods, services, or privileges provided by a given function or segment and 2) grants and contributions (including special assessments) that are restricted to meeting the operational or capital requirements of a particular function or segment. Taxes and other revenues properly not included among program revenues are reported instead as general revenues. This statement provides a net cost or net revenue of specific programs and functions within the County. Those functions with a net cost are generally dependent on general-purpose tax revenues, such as property tax, to remain operational.

NOTE A. SUMMARY OF SIGNIFICANT ACCOUNTING POLICIES (Continued)

5. Basis of Presentation - Fund Financial Statements

The fund financial statements provide information about the County's funds, including its fiduciary funds and blended component units. Separate statements for each fund category – governmental, proprietary (enterprise), and fiduciary – are presented. The emphasis of fund financial statements is on major governmental and enterprise funds, each displayed in a separate column. All remaining governmental and enterprise funds are aggregated and reported as nonmajor funds. Major individual governmental and enterprise funds are reported as separate columns in the fund financial statements.

The County reports the following major governmental funds:

General Fund - The General Fund is the County's primary operating fund. It accounts for all financial resources of the general County, except those accounted for in another fund.

Road Fund - The Road Fund is used to account for gas tax revenues allocated for the construction, repair and maintenance of County roads.

Lincoln County Water District Water Resources Fund - The Lincoln County Water District Water Resources Fund is used to account for general activities of the District, a blended component unit of the government.

Lincoln County Land Act Special Use Fund - The Lincoln County Land Act Special Use Fund is used to account for land sale monies to be spent per ordinances.

County Grant Fund - The County Grant Fund is used to account for monies received to be spent on a specified purpose.

The County reports the following major enterprise fund:

Detention Center Fund - The Detention Center fund is used to account for the activities of the Lincoln County Detention Center, providing detention services for local governments within Nevada.

Solid Waste – The Solid Waste fund is used to account for solid waste disposal throughout the County and land fill operations.

Additionally, the County reports the following fiduciary fund:

Investment Trust – The investment trust fund is an external investment pool operated by the Lincoln County Treasurer. Participants include Caliente City, Lincoln County School District, Range, Panaca Fire Protection District, Pahranagat Fire District, Coyote Springs GID, Pioche Fire District, Southeastern Lincoln County Habitat Conservation Plan GID, and the Lincoln County Fire District.

Agency Funds – The Agency Fund is used to account for assets held by the County in an agency capacity for others and cannot be used to support the government's own programs.

During the course of operations, the County has activity between funds for various purposes. Any residual balances outstanding at year end are reported as due from/to other funds and advances to/from other funds. While these balances are reported in fund financial statements, certain eliminations are made in the preparation of the government-wide financial statements. Balances between the funds included in the governmental activities are eliminated so that only the net amount is included as internal balances in the governmental activities column. Similarly, balances between the funds included in business-type activities (i.e., enterprise funds) are eliminated so that only the net amount is included as internal balances in the business-type activities column.

NOTE A. SUMMARY OF SIGNIFICANT ACCOUNTING POLICIES (Continued)

5. Basis of Presentation - Fund Financial Statements (Continued)

Further, certain activity occurs during the year involving transfers of resources between funds. In fund financial statements these amounts are reported as transfers in/out. While reported in fund financial statements, certain eliminations are made in the preparation of government-wide financial statements. Transfers between the funds included in governmental activities are eliminated so that only the net amount is included as transfers in the governmental activities column. Similarly, balances between the funds included in business-type activities are eliminated so that only the net amount is included as transfers in the business-type activities column.

6. Measurement Focus and Basis of Accounting

The accounting and financial reporting treatment is determined by the applicable measurement focus and basis of accounting. Measurement focus indicates the type of resources being measured such as current financial resources or economic resources. The basis of accounting indicates the timing of events for recognition in the financial statements.

The government-wide financial statements are reported using the economic resources measurement focus and the accrual basis of accounting, as are the proprietary fund and fiduciary fund financial statements. Revenues are recorded when earned and expenses are recorded when a liability is incurred, regardless of the timing of related cash flows. Property taxes are recognized as revenues in the year for which they are levied. Grants and similar items are recognized as revenue as soon as all eligibility requirements imposed by the provider have been met.

The governmental fund financial statements are reported using the current financial resources measurement focus and the modified accrual basis of accounting. Revenues are recognized as soon as they are both measurable and available. Gross receipts and sales taxes are considered “measurable” when in the hands of intermediary collecting governments and are then recognized as revenue. The government considers revenues to be “available” if they are collected within 60 days of the end of the current fiscal period. Anticipated refunds of taxes are recorded as liabilities and reductions of revenue when they are measurable and the payment seems certain. In general, expenditures are recorded when liabilities are incurred. The exception to this rule is that principal and interest on debt service, as well as liabilities related to compensated absences and claims and judgments, are recorded when payment is due. General capital asset acquisitions are reported as expenditures in governmental funds. Issuance of long-term debt and acquisitions under capital leases are reported as other financing sources.

The major revenue sources of the County include consolidated taxes (including sales tax), fuel taxes, intergovernmental revenue, and property taxes. Property taxes, sales taxes, licenses, and interest associated with the current fiscal period are all considered to be susceptible to accrual and so have been recognized as revenues of the current fiscal period. Expenditure-driven grants are recognized as revenue when the qualifying expenditures have been incurred and all other eligibility requirements have been met, and the amount is received during the period or within the availability period for this revenue source (within 60 days of year-end). All other revenue items are considered to be measurable and available only when cash is received by the County.

The proprietary funds are reported using the economic resources measurement focus and the accrual basis of accounting. The agency fund has no measurement focus but utilizes the accrual basis of accounting for reporting its assets and liabilities. Proprietary funds distinguish operating revenues and expenses from non-operating items. Operating revenues and expenses generally result from providing services and producing and delivering goods in connection with a proprietary fund’s principal ongoing operations. The principal operating revenues of the Pioche Public Utility funds are customer charges. Operating revenues for the Building fund come from charges for services for building inspections and permits. The Detention Center receives revenue for housing prisoners of other governments. Expenses are those required to provide the service. The Solid Waste fund is used to account for solid waste disposal throughout the County and landfill operations. All revenues and expenses not meeting this definition are reported as non-operating revenues and expenses.

NOTE A. SUMMARY OF SIGNIFICANT ACCOUNTING POLICIES (Continued)

7. Budgetary Basis of Accounting

Annual budgets are adopted on a basis consistent with generally accepted accounting principles for governmental funds.

a. The statutes provide for the following timetable in adoption of budgets:

(i) Before April 15, the County submits to the Nevada State Department of Taxation a tentative budget for the upcoming fiscal year. The tentative budget includes proposed expenditures and the means to finance them.

(ii) A public hearing must be held by the County Commissioners no sooner than the third Monday in May and no later than the last day in May. Notice of the public hearing must be published once in the local newspaper not more than 14 nor less than 7 days before the hearing.

(iii) On or before June 1, the County Commissioners must adopt a final budget.

b. NRS 354.598005 (1) - provides that the County Commissioners may augment the budget at any time by a majority vote of the Commissioners providing the Commission publish notice of its intention to act in a newspaper of general circulation in the County at least three days before the date set for adoption of the resolution.

c. Nevada Revised Statute 354.598005 (5) allows appropriations to be transferred between functions, funds or contingency accounts if such a transfer does not increase the total appropriation for any fiscal year and is not in conflict with other statutory provisions. The County Auditor may transfer appropriations within any function. The County Auditor may also transfer appropriations between functions or programs within a fund, if the County Commissioners are advised of the action at the next regular meeting; and the action is recorded in the official minutes of the meeting. The County Commissioners may authorize the transfer of appropriations between funds or from the contingency account if the County Commissioners announce the transfer of appropriations at a regularly scheduled meeting and sets forth the exact amounts to be transferred and the accounts, functions, programs and funds affected. The County Commissioners must also set forth its reasons for the transfer; and the action must be recorded in the official minutes of the meeting.

d. Statutory regulations require budget control to be exercised at the function level within the funds.

e. The following funds were augmented during the year: County Grants, and Resource Development Funds had automatic budget augmentations for grant revenue. Panaca Town and Ambulance Funds were augmented during the year for higher than anticipated revenues. Vehicle Capital Projects Fund was augmented for capital lease proceeds.

f. Generally, budgets for all funds are adopted in accordance with generally accepted accounting principles. Budgeted amounts reflected in the accompanying financial statements recognize amendments made during the year.

g. All appropriations lapse at the end of the fiscal year.

NOTE A. SUMMARY OF SIGNIFICANT ACCOUNTING POLICIES (Continued)

8. Assets, Liabilities, Deferred Outflows/Inflows of Resources, and Net Position/Fund Balance

a. Cash and Cash Equivalents

The County's cash and cash equivalents are considered to be cash on hand, demand deposits, and short term investments with original maturities of three months or less from the date of acquisition. Cash includes cash deposited in interest-bearing accounts at banks and cash in the custody of fiscal agents of the County.

b. Investments

Investments are stated at fair value on the Balance Sheet. Fair value is the amount at which a financial instrument could be exchanged in a current transaction between willing parties other than in a forced or liquidation sale. Changes in the fair value of County investments are part of investment income which is included in revenue from local sources on the Statement of Activities and the Statement of Revenues, Expenditures, and Changes in Fund Balances of governmental funds. (**See Note D1**)

Nevada Revised Statutes authorize the County to invest in:

1. Obligations of the U.S. Treasury and U.S. Agencies in which the maturity dates do not exceed more than 10 years from the date of purchase.

2. Negotiable certificates of deposit issued by commercial banks or insured savings and loan associations (those over $250,000 must be fully collateralized).

3. Negotiable notes or short-term negotiable bonds issued by local governments within Nevada.

4. Eligible bankers' acceptances that do not exceed 270 days maturity and do not exceed 20 percent of the portfolio.

5. Commercial paper with a rating of A-1 or P-1 that does not exceed 240 days maturity and does not exceed 20 percent of the portfolio.

6. The State of Nevada's Local Government Investment Pool.

7. Repurchase agreements that are collateralized at 102 percent of the repurchase price and do not exceed 90 days maturity. Securities used for collateral must meet the criteria listed above.

8. Money market mutual funds which are rated as "AAA" or its equivalent and invest only in securities issued by the Federal Government, U.S. Agencies, or repurchase agreements fully collateralized by such securities.

9. Obligations issued or unconditionally guaranteed by the International Bank for Reconstruction and Development or obligations publicly issued in the United States by a foreign financial entity registered with the Securities and Exchange Commission, denominated in dollars with a maturity of 5 years or less with a rating of "AA" or better.

c. Property Tax

Taxes on real property are levied on July 1st of each year and are due on the third Monday in July. They can be paid in quarterly installments in August, October, January, and March. In the event of nonpayment, the County Treasurer is authorized to hold the property for two years, subject to redemption upon payment of taxes, penalties, and costs, together with interest at a rate of 10 percent per year from the date the taxes were due until paid. If delinquent taxes are not paid within the two year redemption period, the County Treasurer obtains a deed to the property free of all encumbrances. Upon receipt of a deed, the County Treasurer may sell the property to satisfy the tax lien.

NOTE A. SUMMARY OF SIGNIFICANT ACCOUNTING POLICIES (Continued)

8. Assets, Liabilities, Deferred Outflows/Inflows of Resources, and Net Position/Fund Balance (Continued)

c. Property Tax (Continued)

Article X, Section 2 of the Constitution of the State of Nevada limits the total taxes levied by all overlapping governmental units within the boundaries of any County (i.e., the County, the County School District, the State and any other City, Town, or Special District) to an amount not to exceed $5 per $100 of assessed valuation of the property being taxed. The Nevada Legislature enacted provisions whereby the combined overlapping tax rate was limited to $3.64 per $100 of assessed valuation.

d. Inventories and Prepaid Items

Inventories are valued at cost using the first-in/first-out (FIFO) method. The cost of such inventories is recorded as expenditures/expenses when consumed rather than when purchased.

Certain payments to vendors reflect costs applicable to future accounting periods and are recorded as prepaid items in both the government-wide and fund financial statements.

e. Restricted Assets

Certain cash assets of the Enterprise Funds are from revenue for specific use by the Enterprise Funds and are classified as restricted assets because their use is restricted by agreement. **(See Note D5)**

f. Capital Assets

Capital assets, which include property, plant and equipment, and infrastructure assets (e.g., roads, bridges, sidewalks, and similar items), are reported in the applicable governmental or business-type activities columns in the government-wide financial statements. Capital assets are defined by the County as assets with an initial individual cost of more than $500 and an estimated useful life in excess of one year.

If purchased or constructed, capital assets are recorded at historical cost or estimated historical cost and updated for additions and retirements during the year. Donated capital assets are valued at their estimated value as of the date of donation. The costs of normal maintenance and repairs that do not add to the value of the asset or materially extend the life of the asset are not capitalized.

Land and construction in progress are not depreciated. The other property, plant and equipment of the primary government are depreciated using the straight line method over the following estimated useful lives:

Capital Assets	Years
Vehicles	10
Equipment	5-20
Buildings and Improvements	20-50
Infrastructure	25-50

The County is required to report and depreciate new infrastructure assets. Infrastructure assets include roads, bridges, underground pipe (other than related to utilities), traffic signals, etc. Neither their historical cost nor related depreciation has historically been reported in the financial statements. The County is required to capitalize and report its major general infrastructure assets acquired in fiscal years ending after June 30, 1980. In addition, infrastructure assets acquired before June 30, 1980, that received significant reconstruction must be capitalized.

NOTE A. SUMMARY OF SIGNIFICANT ACCOUNTING POLICIES (Continued)

8. Assets, Liabilities, Deferred Outflows/Inflows of Resources, and Net Position/Fund Balance (Continued)

g. Deferred Outflows/Inflows of Resources

In addition to assets, the statement of financial position will sometimes report a separate section for deferred outflows of resources. This separate financial statement element, deferred outflows of resources, represents consumption of net position that applies to a future period(s) and so will not be recognized as an outflow of resources (expense/expenditure) until then. Deferred outflows include the County's pension related contributions subsequent to the measurement date but before the end of the fiscal year and changes in proportion of the District's contributions to the County's proportionate contributions.

In addition to liabilities, the statement of financial position will sometimes report a separate section for deferred inflows of resources. This separate financial statement element, deferred inflows of resources, represents an acquisition of net position that applies to a future period(s) and so will not be recognized as an inflow of resources (revenue) until that time. The County has only one type of item, which arises only under a modified accrual basis of accounting, which qualifies for reporting in this category. Accordingly, the item, unavailable revenue, is reported only in the governmental funds balance sheet. The governmental funds report unavailable revenues from one source, property taxes. This amount is deferred and recognized as an inflow of resources in the period that the amounts become available.

Deferred inflows of resources represent an acquisition of net positon that applies to a future period and will not be recognized as an inflow of resources (revenue) until that time. The difference between projected and actual experience and investment earnings are related to the deferred inflows of pensions and the calculation of net pension liability reported on the statement of net position.

For purposes of measuring the net pension liability, deferred outflows of resources and deferred inflows of resources related to pensions, and pension expense, information about the fiduciary net position of the Public Employees' Retirement System of Nevada (PERS) and additions to/deductions from PERS's fiduciary net position have been determined on the same basis as they are reported by PERS. For this purpose, benefit payments are recognized when due and payable in accordance with the benefit terms. Investments are reported at fair value.

h. Governmental Fund Balances:

In the governmental fund financial statements, fund balances are classified as follows:

(i.) **Nonspendable –** Amounts that cannot be spent either because they are in a nonspendable form or because they are legally or contractually required to be maintained intact, such as inventories and prepaids.

(ii.) **Restricted –** Amounts that can be spent only for a specific purpose because of the state or federal laws, or externally imposed conditions by grantors or creditors.

(iii.) **Committed –**These amounts can only be used for specific purposes as set forth by the County Commissioners. The Commissioners must take formal action (vote approval by the majority), in order to establish an ending fund balance commitment for any specific purpose. Formal Commission action is also required to modify or rescind an established commitment. To be reported as committed, amounts cannot be used for any other purpose unless the Commission takes the same highest level action to remove or change the constraint.

NOTE A. SUMMARY OF SIGNIFICANT ACCOUNTING POLICIES (Continued)

8. Assets, Liabilities, Deferred Outflows/Inflows of Resources, and Net Position/Fund Balance (Continued)

h. Governmental Fund Balances (Continued):

(iv.) Assigned – Assignments are neither restrictions nor commitments and represent the County's intent to use funds for a specific purpose. These assignments, however, are not legally binding and are meant to reflect intended future use of the County's ending fund balance. Intent can be expressed by the County Commissioners or by the County Auditor.

(v.) Unassigned – All amounts not included in other classifications.

i. Fund Balance Flow Assumption

Sometimes the County will fund outlays for a particular purpose from both restricted and unrestricted resources (the total of committed, assigned, and unassigned fund balance.) When fund balance resources are available for a specific purpose in more than one classification, it is the County's policy to use the most restrictive funds first in the following order: restricted, committed, assigned, and unassigned as they are needed.

j. Net Position Policies

In the government-wide statements, net position on the Statement of Net Position includes the following:

(i) Invested in Capital Assets, net of Related Debt

This is the component of net position that reports the difference between capital assets less both the accumulated depreciation and the outstanding balance of debt, excluding unexpended proceeds, that is directly attributable to the acquisition, construction, or improvement of those assets.

(ii) Restricted Assets

This is the component of net position that reports the constraints placed on the use of assets by either external parties and/or enabling legislation. Currently, the County restricts assets as follow:

a)	NRS 354.598155	Special Ad Valorem Capital Projects
b)	NRS 354.6113	Capital Projects Fund
c)	NRS 365.190	Road Improvements
d)	NRS 354.6115	Budget Stabilization
e)	NRS 269	Unincorporated Towns

(iii) Unrestricted

This is the component of net position that is the difference between the assets and liabilities not reported in Invested in Capital Assets, Net of Related Debt and Restricted Assets.

k. Net Position Flow Assumption

Sometimes the County will fund outlays for a particular purpose from both restricted (e.g., restricted bond or grant proceeds) and unrestricted resources. In order to calculate the amounts to report as restricted – net position and unrestricted – net position in the government-wide and proprietary fund financial statements, a flow assumption must be made about the order in which the resources are considered to be applied. It is the County's policy to consider restricted – net position to have been depleted before unrestricted – net position is applied.

NOTE A. SUMMARY OF SIGNIFICANT ACCOUNTING POLICIES (Continued)

8. Assets, Liabilities, Deferred Outflows/Inflows of Resources, and Net Position/Fund Balance (Continued)

l. Comparative Data/Reclassifications

Comparative total data for the prior year has been presented in selected sections of the accompanying financial statements in order to provide an understanding of the changes in the County's financial position and operations. Also, certain amounts presented in the prior year data have been reclassified in order to be consistent with the current year's presentation.

m. Use of Estimates

The preparation of financial statements in conformity with generally accepted accounting principles requires management to make estimates and assumptions that affect the reported amounts of assets and liabilities and disclosures of contingent assets and liabilities at the date of the financial statements and the reported amounts of revenues and expenses during the period. Actual results could differ from those estimates.

n. Budgetary Stabilization

It is the County's policy to determine the balance or reserve as reasonable and necessary to carry out the purposes of the stabilization fund on a yearly basis. NRS 354.6115 authorizes the creation of a fund to stabilize operations of local governments and mitigate effects of natural disaster. The intent of this policy is to include a portion of the General Fund budgeted ending fund balance that will be restricted to stabilization pursuant to NRS 354.6115. Fund balance that is restricted to stabilization can be used after approval by the board of County Commissioners when total actual revenue falls short of the total anticipated revenue in the General Fund for the fiscal year in which the County uses the money.

9. Revenues and Expenditures/Expenses

a. Compensated Absences

Vested or accumulated vacation and sick leave that is expected to be liquidated with expendable available financial resources is reported as an expenditure and a fund liability of the governmental fund that will pay it. Amounts of vested or accumulated vacation leave that are not expected to be liquidated with expendable available financial resources are reported in the government-wide financial statements. No expenditure is reported for these amounts in the fund financial statements. (**See Note D6**) Vacation leave and sick leave included in accrued liabilities and recorded as expenditures in governmental fund types is the amount normally liquidated from "available spendable resources."

In proprietary funds, compensated absences are recorded when the liabilities are incurred. In governmental funds, the current portion is recorded as payroll expenditure. The estimated long-term liability for compensated absences is accounted for in the government-wide financial statements.

NOTE A. SUMMARY OF SIGNIFICANT ACCOUNTING POLICIES (Continued)

9. Revenues and Expenditures/Expenses (Continued)

b. Long-term Obligations

In the government-wide financial statements and proprietary fund types in the fund financial statements, long-term debt and other long-term obligations are reported as liabilities in the applicable governmental activities, business-type activities, or proprietary fund type Statement of Net Position. Bond premiums and discounts are deferred and amortized over the life of the bonds using the straight-line method. Bonds payable are reported net of the applicable bond premium or discount. Bond issuance costs are expensed when incurred.

In the fund financial statements, governmental fund types recognize bond premiums and discounts, as well as bond issuance costs, during the current period. The face amount of debt issued is reported as other financing sources. Premiums received on debt issuances are reported as other financing sources while discounts on debt issuances are reported as other financing uses. Issuance costs, whether or not withheld from the actual debt proceeds received, are reported as debt service expenditures.

c. Proprietary Funds Operating and Nonoperating Revenues and Expenses

Proprietary funds distinguish operating revenues and expenses from nonoperating items. Operating revenues and expenses generally result from providing services and producing and delivering goods in connection with a proprietary fund's principal ongoing operations. The principal operating revenues of the enterprise funds are charges to customers for sales and services. Operating expenses for enterprise funds include the cost of sales and services, administrative expenses, and depreciation on capital assets. All revenues and expenses not meeting this definition are reported as nonoperating revenues and expenses.

NOTE B. RECONCILIATION OF GOVERNMENT-WIDE AND FUND FINANCIAL STATEMENTS

1. Explanation of certain differences between the governmental funds Balance Sheet and the government-wide Statement of Net Position

The governmental fund balance sheet includes reconciliation between fund balances - total governmental funds and net position - governmental activities as reported in the government-wide statement of net position. One element of the reconciliation explains that "certain liabilities (such as bonds payable and capital leases payable) are not reported in the Governmental funds financial statements because they are not due and payable, but they are presented as liabilities in the statement of net position." The details of this difference are as follows:

Interest payable	$ (12,659)
Capital lease payable	(108,723)
Compensated absences	(420,161)
Net adjustment to reduce fund balance - total governmental funds to arrive at net position - governmental activities	$ (541,543)

NOTE B. RECONCILIATION OF GOVERNMENT-WIDE AND FUND FINANCIAL STATEMENTS (Continued)

2. Explanation of certain differences between the governmental funds Statement of Revenues, Expenditures, and Changes in Fund Balances and the government-wide Statement of Activities

The governmental fund Statement of Revenues, Expenditures, and Changes in Fund Balances includes a reconciliation between net changes in fund balances - total governmental funds and changes in net position of governmental activities as reported in the government-wide Statement of Activities. One element of that reconciliation explains that "Capital outlays to purchase or build capital assets are reported in Governmental Funds financial statements as expenditures. However, for governmental activities those costs are shown in the statement of net position and allocated over their estimated useful lives as annual depreciation expense in the statement of activities." The details of this difference are as follows:

Capital outlay	$ 666,737
Book value of disposed assets	(209,407)
Depreciation expense	(1,335,847)
Net adjustment to increase net changes in fund balances - total governmental funds to arrive at changes in net position of governmental activities	$ (878,517)

Another element of that reconciliation states that, "The issuance of long-term debt (i.e., bonds, leases) provides current financial resources to governmental funds, while the repayment of the principal of long-term debt consumes the current financial resources of governmental funds. Neither transaction, however, has any effect on Net Position. Also, governmental funds report the effect of issuance costs, premiums, discounts, and other similar items when debt is first issued, whereas these amounts are deferred and amortized in the statement of activities. This amount is the net effect of these differences in the treatment of long-term debt and related items." The details of this difference are as follows:

Capital lease proceeds	$ (100,300)
General obligation debt principal payments	$ 101,799
Net adjustment to increase net change in fund balances – governmental funds to arrive at change in net position of governmental activities	$ 1,499

Another element of that reconciliation states that "Generally, expenditures recognized in the fund financial statements are limited to only those that use current financial resources, but expenses are recognized in the statement of activities when incurred." The details of this difference are as follows:

Accrued interest	$ (8,858)
Compensated absences	1,907
Net adjustment to increase net change in fund balances – governmental funds to arrive at change in net position of governmental activities	$ (6,951)

NOTE C. STEWARDSHIP, COMPLIANCE, AND ACCOUNTABILITY

1. Compliance and Accountability

The County conformed to significant statutory requirements regarding financial administrations except as follows:

Per NRS 354.626, the County is required to report expenditures that exceeded budgeted appropriations at the function level for the General Fund, Special Revenue Funds, and Capital Project Funds. Enterprise funds may not exceed budget appropriations at the fund level. For the year ending June 30, 2020, the County had the following expenditures over appropriations that are required to be reported.

Alamo Town – Public works function	$	339
Airport – Public works function	$	952
Detention Center Enterprise Fund	$	39,303

The over expenditures in the funds relate to expenses that came in after year end that caused the functions to go over budget.

2. Deficit Fund Balance/Net Position

Legal Aid Services Fund	$ 3,195
Detention Center Enterprise Fund	$ 2,503,285
Building Department Enterprise Fund	$ 89,397

The deficit net position of the Detention Center and Building Department Enterprise funds are due to the individual fund's proportionate share of the net pension liability of the Public Employees' Retirement System of the State of Nevada. See **Note D-12** of the financial statement.

NOTE D. DETAILED NOTES ON ALL FUNDS

1. Pooled Cash and Investments

The County maintains a cash and investment pool that is available for use by all funds under the custody of the County Treasurer. At June 30, 2020, this pool is displayed by the statement of net position and major and other governmental funds on the governmental funds balance sheet as "Pooled Cash and Investments."

A reconciliation of cash and investments as shown in the Statement of Net Position is as follows:

Cash in the hands of officers	$ 83,750
Carrying amount of deposits	5,092,528
Fair value of investments	21,377,853
Total	$26,554,131

NOTE D. DETAILED NOTES ON ALL FUNDS (Continued)

1. Pooled Cash and Investments (Continued)

A reconciliation of cash and investments as for the County is as follows:

Government-wide pooled cash and investments	$22,332,121
Restricted cash	94,777
Total primary government	22,426,898
Investment trust fund	3,196,587
Agency fund cash	930,646
Total reporting entity	$26,554,131

Except for financial reporting purposes, the cash balances of $4,127,233 in the Fiduciary Funds are not normally considered part of the County's pooled cash and investments. These amounts represent cash held in a fiduciary capacity by the County and cannot be used in the County's normal operations.

The cash and investment pool is available for use by all funds of the County. Cash and investments under the custody of the County Treasurer are invested as a pool. The County Treasurer may invest the money of the investment pool in investments which have been authorized as investments by Nevada Revised Statutes. (**See Note A8b**)

Investment income is apportioned to the funds within the pool monthly based on the average balance invested for the month.

State statutes authorize the County to invest in obligations of the U.S. Treasury, commercial paper, corporate bonds, repurchase agreements, and the State Treasurer's Investment Pool.

Cash and investment are subject to the following risks:

Interest Rate Risk: Interest rate risk is the risk of possible reduction in the value of a security, especially a bond, resulting from the rise in interest rates. Nevada Revised Statutes limits bankers' acceptances to 180 days of maturities, repurchase agreements to 90 days, U.S. Treasuries and Agencies to less than 10 years, and commercial paper to 270 days maturity. The approximate weighted average maturity of investments in the Lincoln County Treasurer's investment pool was 2.20 years.

As of June 30, 2020, monies held in the Lincoln County Treasurer's cash and investment pool are categorized as follows:

		Investment Maturities (In Years)		
Investment Type	Fair Value	Less than 1	1-5	6-10
U.S. Treasury notes	$ 2,597,743	$ 727,525	$ 1,870,218	$ 0
U.S. Agency backed mortgages	1,062,205	0	1,062,205	0
Corporate notes	3,392,332	1,547,284	1,845,048	0
Money market funds	1,046,955	1,046,955	0	0
Negotiable certificates of deposit	13,278,618	1,738,789	11,539,829	0
Total Investments	$21,377,853	$ 5,060,553	$ 16,317,300	$ 0

Governmental Accounting Standards require fair value reporting of all investments. The fair value of the County's investments was determined by market quotes.

NOTE D. DETAILED NOTES ON ALL FUNDS (Continued)

1. Pooled Cash and Investments (Continued)

Credit Risk: Credit risk is the risk that an issuer or other counterparty to an investment will not fulfill its obligation and is a function of the credit quality ratings of its investments. The Nevada Revised Statutes limits investments instruments by their credit risk **(Note A8a)**. The State of Nevada Local Government Investment Pool is an unrated external investment pool.

As of June 30, 2020, monies held in the Lincoln County Treasurer's cash and investment pool are categorized as follows:

		Quality Ratings by Moody's			
Investment Type	Fair Value	Aaa	A2	A3	N/A
U.S. Treasury notes	$ 2,597,743	$ 2,597,743	$ 0	$ 0	$ 0
U.S. Agency backed mortgages	1,062,205	1,062,205	0	0	0
Corporate notes	3,392,332	0	2,046,134	1,346,198	0
Money market funds	1,046,955	0	0	0	1,046,955
Negotiable certificates of deposit	13,278,618	0	0	0	13,278,618
Total Investments	$21,377,853	$ 3,659,948	$2,046,134	$ 1,346,198	$14,325,573

Custodial Credit Risk: Custodial credit risk is the risk that in the event of a bank or brokerage failure, the County's deposits may not be returned. The County's bank deposits are generally covered by FDIC insurance and are collateralized by the Office of the State Treasurer/Nevada Collateral Pool. At year-end, the County's carrying amount of deposits was $5,092,528 and the bank balance was $5,226,510. Of the bank balance, $500,000 was covered by federal depository insurance. Of the remaining balance, $4,726,510 was collateralized with securities held by the Nevada Pooled Collateral Program.

Concentrations of Credit Risk: Concentration of credit risk is defined as the risk of loss attributed to the magnitude of a government's investment in a single issuer. Investments with a single issuer within the Lincoln County Treasurer Cash and investment pool that represent five percent or more of total investments as of June 30, 2020, are as follows:

U.S. Treasury Notes	12.78%

Fair Value: The County categorize its investments using fair value measurements within the fair value hierarchy established by generally accepted accounting principles. The hierarchy is based on the valuation inputs used to measure the fair value of the asset. Level 1 inputs are quoted prices in active markets for identical assets; Level 2 inputs are significant other observable inputs; Level 3 inputs are significant unobservable inputs.

The County has the following recurring fair value measurements as of June 30, 2020:

Investment Type	Fair Value	Level 1	Level 2	N/A
U.S. Treasury notes	$ 2,597,743	$ 2,597,743	$ 0	$ 0
U.S. Agency backed mortgages	1,062,205	0	1,062,205	0
Corporate notes	3,392,332	0	3,392,332	0
Money market mutual funds	1,046,955	0	0	1,046,955
Negotiable certificates of deposit	13,278,618	0	0	13,278,618
Total Investments	$21,377,853	$ 2,597,743	$ 4,454,537	$ 14,325,573

NOTE D. DETAILED NOTES ON ALL FUNDS (Continued)

1. Pooled Cash and Investments (Continued)

External Investment Pool: The County Treasurer administers an investment pool in accordance with NRS 355.168 combining the County funds with investments from Caliente City, Lincoln County School District, Range, Panaca Fire Protection District, Pahranagat Fire District, Coyote Springs GID, Pioche Fire District, Southeastern Lincoln County Habitat Conservation Plan GID, and the Lincoln County Fire District. The Board of County Commissioners has the overall responsibility of investment of funds including the external investment pool in accordance with NRS 355.175. The Lincoln County Treasurer is delegated investment responsibilities. The fair value of investments is determined monthly as statements from the various investment companies are received. Each participant's share is equal to their original investment plus or minus monthly allocations of interest income and realized and unrealized gains and losses. The County has not provided nor obtained any legally binding guarantees to support the value of the shares.

A summary of investments held in external investment pools at June 30, 2020, is as follows:

Investment Type	Fair Value	Principal Amount	Interest Rate
U.S. Treasury notes	$ 1,297,937	$ 1,275,000	Variable
U.S. Agency backed mortgages	281,911	375,000	Variable
Corporate notes	2,470,037	2,456,000	Variable
Money market funds	1,016,435	1,016,435	Variable
Negotiable certificates of deposit	10,781,975	10,393,000	Variable
Total Investments	$15,848,295	$ 15,515,435	

External Investment Pool Condensed Financial Statement
Statement of Net Position
June 30, 2020

Assets:	
Investments in securities:	
U.S. Treasury notes	$ 1,297,937
U.S. Agency backed mortgages	281,911
Corporate notes	2,470,037
Money market funds	1,016,435
Negotiable certificates of deposit	10,781,975
Total investments held in external investment pools	$ 15,848,295
Net position held in trust for pool participants	
Net position consists of	
Internal participants	$ 12,651,708
External participants	3,196,587
Total net position held in trust for pool participants (Participant's units' outstanding, $1.00/par)	$ 15,848,295

Statement of Changes in Net Position
For the Year Ended June 30, 2020

Additions:	
Investment earnings	$ 304,419
Net change in fair value of investments	421,447
Change in net position resulting from operations	725,866
Net capital share transactions	0
Change in net position	725,866
Net position, beginning of year	15,122,429
Net position, end of year	$ 15,848,295

NOTE D. DETAILED NOTES ON ALL FUNDS (Continued)

2. Receivables

Below is the detail of receivables for each major fund and the nonmajor funds, in the aggregate, including the applicable allowances for uncollectible accounts:

Receivables:	Taxes	Interest	Due from Other Governments	Due from Others	Special Assessment	Accounts Receivable	Total
General	$30,333	$ 7,729	$ 291,829	$ -	$ -	$ -	$ 329,891
Road	-	1,068	246,465	-	-	-	247,533
Water Resources	-	12,183	-	-	-	-	12,183
Land Act Use	-	5,718	-	-	-	-	5,718
County Grant	-	159	368,298	-	-	-	368,457
Other Governmental Funds	21,240	28,775	82,464	20,128	79,764	-	232,371
Detention Center	-	-	-	-	-	148,575	148,575
Solid Waste	-	133	-	-	-	131,219	131,352
Nonmajor Enterprise Funds	-	851	-	-	-	33,895	34,746
Total receivables	$51,573	$56,616	$ 989,056	$ 20,128	$ 79,764	$ 313,689	$1,510,826

3. Capital Assets

Capital assets activity for the year ended June 30, 2020, was as follows:

Governmental Activities:

	Balance June 30, 2019	Additions	Dispositions	Balance June 30, 2020
Capital assets not being depreciated:				
Land	$ 1,809,860	$ -	$ -	$ 1,809,860
Capital assets being depreciated:				
Building and improvements	23,738,032	269,597	-	24,007,629
Infrastructure	2,150,970	-	-	2,150,970
Equipment	10,193,973	397,140	(1,658,209)	8,932,904
Total capital assets being depreciated	36,082,975	666,737	(1,658,209)	35,091,503
Less accumulated depreciation for:				
Building and improvements	7,894,600	863,884	-	8,758,484
Infrastructure	373,820	43,019	-	416,839
Equipment	5,902,803	428,944	(1,448,802)	4,882,945
Total accumulated depreciation	14,171,223	1,335,847	(1,448,802)	14,058,268
Total capital assets being depreciated, net	21,911,752	(669,110)	(209,407)	21,033,235
Governmental activities assets, net	$ 23,721,612	$ (669,110)	$ (209,407)	$ 22,843,095

NOTE D. DETAILED NOTES ON ALL FUNDS (Continued)

3. Capital Assets

Business-type Activities:

	Balance June 30, 2019	Additions	Dispositions	Balance June 30, 2020
Capital assets not being depreciated:				
Land	$ 214,000	$ -	$ -	$ 214,000
Capital assets being depreciated:				
Building and improvements	1,374,844	-	-	1,374,844
Utility system	1,435,264	11,776	(63,638)	1,383,402
Equipment	1,755,899	475,933	(333,412)	1,898,420
Total capital assets being depreciated	4,566,007	487,709	(397,050)	4,656,666
Less accumulated depreciation for:				
Building and improvements	427,586	44,175	-	471,761
Utility system	699,613	28,486	(7,674)	720,425
Equipment	1,004,357	106,358	(195,581)	915,134
Total accumulated depreciation	2,131,556	179,019	(203,255)	2,107,320
Total capital assets being depreciated, net	2,434,451	308,690	(193,795)	2,549,346
Business-type activities assets, net	$ 2,648,451	$ 308,690	$ (193,795)	$ 2,763,346

Depreciation expense was charged to functions/programs of the primary government as follows:

Governmental activities:	
General government	$ 127,576
Public safety	138,849
Judicial	23,530
Public works	487,225
Health and sanitation	58,734
Welfare	20,849
Community support	19,555
Culture and recreation	459,429
	$ 1,335,847
Business activities:	
Building	$ 476
Water	22,937
Sewer	18,557
Electric	0
Solid waste	92,762
Detention center	44,287
	$ 179,019

NOTE D. DETAILED NOTES ON ALL FUNDS (Continued)

4. Accrued Liabilities

Accrued liabilities reported by governmental funds at June 30, 2020, were as follows:

Fund	Accrued Payroll and Benefits	Customer Deposits	Interest Payable
General	$ 220,587	$ -	$ -
Road	50,875	-	-
Lincoln County Land Act Special Use	186,817	-	-
County Grants	19,422	-	-
Other Governmental Funds	33,405	-	-
Detention Center	212,007	-	-
Solid Waste	17,898	-	8,174
Nonmajor Enterprise Funds	15,390	90	1,288
Total	$ 756,401	$ 90	$ 9,462

5. Restricted Assets

The balances of the County's restricted asset accounts are as follows

Cash – Pioche Public Utility –	USDA debt and replacement reserve	$ 11,490
Cash – Solid Waste	Landfill closure, and post-closure	83,287
Total restricted cash		$ 94,777

6. Long-term Debt

Governmental Type Activities:

Note Payable

a. The County borrowed money for the purchase of BLM land. The original principal of the note was $440,000. Payments are due in monthly installments of $4,383 through November 2020, with interest at 5%. The note was paid in full during the year.

NOTE D. DETAILED NOTES ON ALL FUNDS (Continued)

6. Long-term Debt

Governmental Type Activities: (Continued)

Capital Leases

a. The County entered into a lease agreement for 4 public safety vehicles totaling $133,245. The leases have been classified as capital leases according to generally accepted accounting principles. The leases contain non-funding clauses whereby the leases are terminated without penalty should the County fail in a budget year to appropriate money for the payment. The vehicles have a ten-year estimated useful life. This year, $26,649 was included in depreciation expense. This lease agreement qualifies as a capital lease for accounting purposes and, therefore, has been recorded at the present value of future minimum lease payments as of the inception date. The future minimum lease obligations and the net present value of these minimum lease payments as of June 30, 2020, were as follows:

Year Ending June 30,	Remaining Payments	Amount Representing Principal	Amount Representing Interest
2021	$ 47,180	$ 44,153	$ 3,027

b. During the year ending June 30, 2020, the County entered into a lease agreement for 3 public safety vehicles totaling $100,300. The leases have been classified as capital leases according to generally accepted accounting principles. The leases contain non-funding clauses whereby the leases are terminated without penalty should the County fail in a budget year to appropriate money for the payment. The vehicles have a ten-year estimated useful life. This year, $0 was included in depreciation expense. This lease agreement qualifies as a capital lease for accounting purposes and, therefore, has been recorded at the present value of future minimum lease payments as of the inception date. The future minimum lease obligations and the net present value of these minimum lease payments as of June 30, 2020, were as follows:

Year Ending June 30,	Remaining Payments	Amount Representing Principal	Amount Representing Interest
2021	$ 35,792	$ 31,129	$ 4,663
2022	35,792	33,441	2,351
	$ 71,584	$ 64,570	$ 7,014

NOTE D. DETAILED NOTES ON ALL FUNDS (Continued)

6. Long-term Debt (Continued)

Business-Type Activities:

Revenue Bonds The County issues revenue bonds to provide funds for the acquisition and construction of utility capital assets. Revenue bonds have been issued for the business-type activities. Revenue bonds are an obligation of the enterprise utility funds for which the capital assets were acquired or constructed. Revenue bonds outstanding at June 30, 2020, are as follows:

a. **$210,000, 2007 Pioche Town Sewer bond** is payable to the U.S. Department of Agriculture-Rural Development. The bond is payable in semi-annual payments of $5,584 including interest. The interest rate is 4.375%. The bond agreement requires the County to establish and fund monthly a debt service reserve fund equal to 10% of the semi-annual payment each month over the life of the loan until they accumulate one annual installment. This reserve fund can be used for emergency maintenance and repairs, and debt repayment should the need arise. The required reserve as of June 30, 2020, is $11,490. The balance in the reserve account was $11,490 as of June 30, 2020 **(See Note D-5)**. The outstanding balance of bonds payable at June 30, 2020, was $177,489.

Annual debt service requirements to maturity for the revenue bond are as follows:

Year Ending June 30,	Principal	Interest
2021	$ 3,440	$ 7,728
2022	3,592	7,576
2023	3,751	7,417
2024	3,915	7,253
2025	4,090	7,078
2026-2030	23,337	32,503
2031-2035	28,964	26,876
2036-2040	35,961	19,879
2041-2045	44,648	11,192
2046-2048	25,791	1,669
	$ 177,489	$ 129,171

b. **$350,000, 1980 Pioche Town Water bond** due in monthly installments of $1,729, including interest at 5%, through 2021. The Water bond is payable to the Farmers Home Administration. The bond agreement requires the County to establish and maintain reserves sufficient to insure that loan installments will be paid on time and to pay for emergency maintenance of the facilities. The bond was paid in full during the year and restricted reserves were released.

NOTE D. DETAILED NOTES ON ALL FUNDS (Continued)

6. Long-term Debt (Continued)

Changes in Long-term Debt: During the year ended June 30, 2020, the following changes occurred in long-term debt:

Governmental activities:

	Balance June 30, 2019	Net Additions	Net Deletions	Balance June 30, 2020	Due within One Year
Compensated absences	$ 422,068	$ -	$ 1,907	$ 420,161	$ 236,131
Net pension liability	7,600,013	-	235,186	7,364,827	-
OPEB obligation payable	334,948	71,150	-	406,098	-
Note payable	24,157	-	24,157	-	-
Capital lease payable	86,065	100,300	77,642	108,723	75,282
Total	$ 8,467,251	$ 171,450	$ 338,892	$ 8,299,809	$ 311,413

Business-type activities:

	Balance June 30, 2019	Net Additions	Net Deletions	Balance June 30, 2020	Due within One Year
Compensated absences	$ 227,116	$ -	$ 48,358	$ 178,758	$ 102,835
Net pension liability	3,615,370	-	263,416	3,351,954	-
OPEB obligation payable	93,697	21,209	-	114,906	-
Landfill closure and postclosure cost	60,000	20,000	-	80,000	-
Bond payable	188,119	-	10,630	177,489	3,440
Total	$ 4,184,302	$ 41,209	$ 322,404	$ 3,903,107	$ 106,275

The compensated absence liability will be liquidated primarily by the General Fund. The capital leases will be paid by the Vehicle Capital Projects Fund.

Per Nevada Revised Statute Chapter 244A.059, the debt limitation for the County is equal to 10 percent of the assessed valuation of property, excluding motor vehicles for the current year. The debt limitation currently applicable at June 30, 2020, was $29,072,613. Per Nevada Revised Statutes Chapter 269.425, the debt limitations for the unincorporated towns, which cannot exceed 25% of assessed valuation of property within the town are as follows: Alamo Town $2,566,258, Panaca Town 3,511,663, and Pioche Town $4,548,933.

NOTE D. DETAILED NOTES ON ALL FUNDS (Continued)

7. Interfund Transfers

Interfund operating transfers are made from one fund to another fund to support expenditures in accordance with the authority established for the individual funds. Transfers between fund types during the year ended June 30, 2020, were:

		Transfer Out				
	Total Transfers In	General	Road	LC Water District Water Resources	Nonmajor Special Revenue	Nonmajor Capital Projects
General Fund	$ 75,000	$ -	$ -	$ -	$ 75,000	$ -
Lincoln County Land Act Special Use	151	-	-	-	151	-
County Grant Fund	53,835	-	-	-	53,835	-
Nonmajor Special Revenue Funds	343,308	50,000	-	200,000	93,308	-
Nonmajor Capital Projects Funds	220,503	-	100,000	-	-	120,503
Major Enterprise - Detention Center	60,000	-	-	-	60,000	-
Nonmajor Enterprise Funds	50,000	-	-	-	50,000	-
Total	$ 802,797	$ 50,000	$ 100,000	$ 200,000	$ 332,294	$ 120,503

Following are explanations of certain interfund transfers of significance to the County:

The General Fund transferred money to the following funds: Property Management $40,000 and China Springs $10,000 to help cover costs.

The Road Fund transferred $100,000 to the Road Capital Projects Fund to help cover the costs of a new equipment.

The Federal in Lieu Fund transferred money to the following funds: Building Enterprise Fund $50,000, Detention Center Fund $60,000, and the Planning Fund $75,000 which is internally reported fund in the General Fund. These budgeted transfers were made to help cover operating costs. Transfers were also made for $53,835 to the County Grant Fund, $15,000 to the District Court Specialty Court Fund, and $33,308 to the Senior Nutrition Fund for grant match.

The Lincoln County Water District Fund transferred $200,000 to the Lincoln County Water Resources Fund to help cover operating costs.

The Room Tax Fund transferred $10,000 to the Fair Board Fund to help cover costs.

The Regional Transportation Commission transferred $35,000 to the Transportation Fund for a grant match and to help cover costs.

The Capital Projects Fund transferred money to the following capital projects funds: $110,000 to the Vehicle Capital Projects for assistance with capital asset purchases and debt payments; $10,503 to the Alamo, Panaca, and Pioche Town Capital Projects Funds for distribution of property taxes collected pursuant to Nevada Revised Statutes 354.59815.

The Lincoln County Land Act Grant Match Fund transferred to the Lincoln Count Land Act Special Use Fund $151

NOTE D. DETAILED NOTES ON ALL FUNDS (Continued)

8. Interfund Receivable / Payable

The Solid Waste Enterprise Fund borrowed monies from two special revenue funds which is being repaid over 10 years. The funds which will receive those payments are as follows:

	Due to		Due from
Lincoln County Land Act Special Use	$ 600,921	Solid Waste Enterprise	$ 770,921
Lincoln County Water Special Use	170,000		
	$ 770,921		

The County purchased the local landfill and created the Solid Waste Enterprise Fund in 2017. To help cover initial costs and have cash available, the Solid Waste Enterprise Fund borrowed monies from two special revenue funds which is being repaid over 10 years at 0% interest.

Annual debt service requirements to maturity for the payable are as follows:

Year Ending June 30,	Principal
2021	$ 40,000
2022	40,000
2023	40,000
2024	40,000
2025	40,000
2026-2027	140,000
	$ 340,000

The County purchased a roll off truck in 2020 for $179,738. To help cover costs and have cash available, the Solid Waste Enterprise Fund borrowed monies from the Lincoln County Land Act Special Use special revenue fund which is being repaid over 10 years at 4% interest.

Annual debt service requirements to maturity for the payable are as follows:

Year Ending June 30,	Remaining Payments	Amount Representing Principal	Amount Representing Interest
2021	$ 22,809	$ 16,244	$ 6,565
2022	22,809	16,894	5,915
2023	22,809	17,570	5,239
2024	22,809	18,272	4,537
2025	22,809	19,003	3,806
2026-2029	83,447	76,136	7,311
	$ 197,492	$ 164,119	$ 33,373

NOTE D. DETAILED NOTES ON ALL FUNDS (Continued)

8. Interfund Receivable / Payable (Continued)

The County purchased a front load truck in 2020 for $266,802. To help cover costs and have cash available, the Solid Waste Enterprise Fund borrowed monies from the Lincoln County Land Act Special Use special revenue fund which is being repaid over 10 years at 2% interest.

Annual debt service requirements to maturity for the payable are as follows:

Year Ending June 30,	Remaining Payments	Amount Representing Principal	Amount Representing Interest
2021	$ 32,894	$ 27,558	$ 5,336
2022	32,894	23,324	9,570
2023	32,894	24,257	8,637
2024	32,894	25,228	7,666
2025	32,894	26,237	6,657
2026-2030	156,878	140,198	16,680
	$ 321,348	$ 266,802	$ 54,546

9. Unearned Revenue

Governmental funds report unearned revenue in connection with the resources that have been received but not yet earned. At June 30, 2020, the County had the following unearned revenues:

Qualifying expenditures for expenditure-driven grants have not occurred before June 30, 2020.

County Grant	Other Governmental	Total
$ 120,912	$ 95,830	$ 216,742

10. Unavailable Revenue

Delinquent taxes receivable not collected within sixty days after year-end are recorded as deferred inflows of resources as they are not available to pay liabilities of the current period. At June 30, 2020, the County had the following unavailable revenues:

General	Other Governmental	Total
$ 26,513	$ 12,022	$ 38,535

Grants receivable not collected within sixty days after year-end are recorded as deferred inflows of resources as they are not available to pay liabilities of the current period. The following grants receivable have been deferred:

County Grant
$ 121,506

NOTE D. DETAILED NOTES ON ALL FUNDS (Continued)

11. Risk Management

Property, Casualty, Crime, and Machinery Insurance

The County is exposed to various risks of loss related to torts; theft of, damage to, and destruction of assets; errors and omissions; injuries to employees; and natural disasters. The County joined together with other local governments throughout the State of Nevada to create a pool under the Nevada Interlocal Cooperation Act. The Nevada Public Agency Insurance Pool (NPAIP) is a public entity risk pool currently operating as a common risk management and insurance program for members. The County pays an annual premium and specific deductibles, as necessary, to NPAIP for its general insurance coverage. NPAIP is considered a self-sustaining risk pool that will provide liability coverage for its members up to $10,000,000 per event and a $10,000,000 annual aggregate per member. Property, crime, and equipment breakdown coverage is provided to its members up to $300,000,000 per loss with various sub-limits established for earthquake, flood, equipment breakdown, and money and securities. Cyber security events including privacy response expense are covered at $3,000,000 per event with an annual aggregate of $3,000,000. As a participatory member, the maintenance deductible is $2,000 for each insured event.

The County is self-insured for unemployment claims. Payments are made from the general fund to cover claims.

The County participates in the Public Agency Compensation Trust (PACT). Premiums paid to PACT cover workers' compensation claims against the County. Premiums are based on a percentage of wages paid.

The County carries commercial insurance for all other risks of loss including employee health and accident insurance. Settled claims resulting from these risks have not exceeded commercial insurance coverage in any of the past three fiscal years.

12. Contingent Liabilities

Grants
Amounts received or receivable from grantor agencies are subject to audit and adjustment by those agencies, principally the Federal Government. Any disallowed claims, including amounts already collected, may constitute a liability of the applicable funds. The amount, if any, of expenditures which may be disallowed by the grantor cannot be determined at this time although the County expects such amounts, if any, to be immaterial.

Litigation
The County is a defendant in various lawsuits. Although the outcome of these lawsuits is not presently determinable, it is the opinion of the County's counsel that resolution of these matters will not have a material adverse effect on the financial condition of the County.

Landfill Closure and Post-Closure Costs
State and federal laws and regulations require the County to place a final cover on its landfill sites when it stops accepting waste and to perform certain maintenance and monitoring functions at the sites for thirty years after closure. The closure and post-closure care costs will be paid only near or after the date that the landfills stop accepting waste.

As of June 30, 2020, the estimated liability to date for closure and post-closure costs is $80,000. This represents the cumulative amount reported to date based on percent use of the estimated liability of $1,700,000 as the remaining capacity is used. Actual costs may be higher due to inflation, changes in technology, or changes in regulations. The County operates one landfill with an estimated remaining life of 38 years. As of June 30, 2020, $83,287, has been restricted for future closure, post-closure, and opening landfill costs in the Solid Waste Fund. The County is presently using the "Local Government Test" as financial assurance mechanism for its closure and post-closure costs.

NOTE D. DETAILED NOTES ON ALL FUNDS (Continued)

12. Contingent Liabilities

Coronavirus (COVID-19)

On March 11, 2020, the World Health Organization declared the outbreak of the coronavirus (COVID-19) a pandemic. The President of the United States declared the outbreak of coronavirus a national emergency on March 13, 2020. The related health crisis has adversely affected the global economy, including disruptions to domestic and international travel and the hospitality industry in the State of Nevada.

In response to the Coronavirus pandemic, the Governor of Nevada issued several declarations of emergency to mitigate the health impact of the pandemic. Directives included the closure of gaming establishments, non-essential businesses and onsite dining at restaurants and food establishments.

The outbreak of the Coronavirus and the dramatic steps taken by the Federal government and the State to Nevada to address it will continue to impact national and local economies. The full impact on the State of Nevada and the District's financial condition is not expected to be known for some time. The impact on the District's future operations as a result of the Coronavirus is difficult to predict due to uncertainties relating to it duration and severity, as well as additional actions that may be taken by governmental and other health care authorities to contain or mitigate the effects of the virus. The possible reemergence of the virus later in the year could have an adverse financial effect on the District. The District is continuously monitoring the situation and will take such proactive measures as may be required to maintain operations and meet its obligations. Given the level of uncertainty, management cannot reasonably estimate the actual impact on the District's future financial position at this time.

13. Defined Benefit Pension Plan

Plan Description. All half time and greater County employees are provided pension benefits through the Public Employees' Retirement System of the State of Nevada (PERS), a cost sharing multiple-employer, defined benefit plan administered by the Public Employees' Retirement System of the State of Nevada. PERS provides retirement benefits, disability benefits, and death benefits, including annual cost of living adjustments, to plan members and their beneficiaries. NRS Chapter 286 establishes the benefit provisions provided to the participants of PERS. These benefit provisions may only be amended through legislation. The Public Employees' Retirement System of the State of Nevada issues a publicly available financial report that includes financial statements and required supplementary information for PERS that can be obtained at www.nvpers.org under Quick Links — Publications.

Benefits Provided. Benefits, as required by the Nevada Revised Statutes (NRS or statute), are determined by the number of years of accredited service at time of retirement and the member's highest average compensation in any 36 consecutive months. Vested members are entitled to a life-time monthly retirement benefit equal to the service time multiplier (STM) percentages listed below times the member's years of service to a maximum of 30 years. The schedule of Eligibility for Monthly Unreduced Retirement Benefits for regular members and police/fire members are as follows:

Eligibility for Regular Members:

Years of Service	Hired prior to 07/01/01		Hired between 07/01/01-12/31/09		Hired Between 01/01/10-07/01/15		Hired After 7/1/15	
	Age	STM%	Age	STM%	Age	STM%	Age	STM%
5 years	65	2.50%	65	2.67%	65	2.50%	65	2.25%
10 years	60	2.50%	60	2.67%	62	2.50%	62	2.25%
30 years	Any	2.50%	Any	2.67%	Any	2.50%	55	2.25%
33 1/3 years							Any	2.25%

NOTE D. DETAILED NOTES ON ALL FUNDS (Continued)

13. Defined Benefit Pension Plan (Continued)

Eligibility for Police and Fire Members:

Years of Service	Hired prior to 07/01/01		Hired between 07/01/01-12/31/09		Hired Between 01/01/10-07/01/15		Hired After 7/1/15	
	Age	STM%	Age	STM%	Age	STM%	Age	STM%
5 years	65	2.50%	65	2.67%	65	2.50%	65	2.50%
10 years	55	2.50%	55	2.67%	60	2.50%	60	2.50%
20 years	50	2.50%	50	2.67%	50	2.50%	50	2.50%
25 years	Any	2.50%	Any	2.67%				
30 years					Any	2.50%	Any	2.50%

* Only service performed in a position as a police officer or firefighter may be counted towards eligibility for retirement as Police/Fire accredited service.

Benefit payments to which participants or their beneficiaries may be entitled under the plan include pension benefits, disability benefits, and survivor benefits. The System offers several alternatives to the unmodified service retirement allowance which, in general, allow the retired employee to accept a reduced service retirement allowance payable monthly during his or her lifetime and various optional monthly payments to a named beneficiary after his or her death. Post-retirement increases are provided by authority of NRS 286.575 - .579.

The normal ceiling limitation on monthly benefits allowances is 75% of average compensation. However, a member who has an effective date of membership before July 1, 1985, is entitled to a benefit of up to 90% of average compensation. Both Regular and Police/Fire members become fully vested as to benefits upon completion of five years of service.

Contributions: Benefits for plan members are funded under the employer pay contribution plan. The County is required to contribute all amounts due under the plan. PERS receives an actuarial valuation on an annual basis indicating the contribution rates required to fund the System on an actuarial reserve basis. Contributions actually made are in accordance with the required rates established by the Nevada Legislature. These statutory rates are increased/decreased pursuant to NRS 286.421 and 286.450. The County's required contribution rates for the year ending June 30, 2020, were 42.50% for police and fire; 29.25% for regular employees; 45.50% for Justice of the Peace; and 15.25% employee/employer match. The County has fully funded the amounts due for the year ending June 30, 2020. For purposes of GASB No. 82, the County recognized only the employer portion as a deferred outflow.

The actuary funding method used is the Entry Age Normal Cost Method. It is intended to meet the funding objective and result in a relatively level long-term contribution requirement as a percentage of salary.

Pension Liabilities, Pension Expense, and Deferred Outflows of Resources and Deferred Inflows of Resources Related to Pensions

At June 30, 2020, the County reported a liability of $10,716,781 for its proportionate share of the net pension liability. The net pension liability was measured as of June 30, 2019, and the total pension liability used to calculate the net pension liability was determined by an actuarial valuation as of that date. The County's allocation percentage of the net pension liability was based on the total contributions due on wages paid during the measurement period. Each employer's proportion of the net pension liability is based on their combined employer and member contributions relative to the total combined employer and member contributions for all employers for the period ended June 30, 2019. The County's proportionate share of the net pension liability decreased from 0.08224 percent at June 30, 2018 to 0.07859 at June 30, 2019.

NOTE D. DETAILED NOTES ON ALL FUNDS (Continued)

13. Defined Benefit Pension Plan (Continued)

For the year ended June 30, 2020, the County recognized pension expense of $199,500. At June 30, 2020, the County reported deferred outflows of resources and deferred inflows of resources related to pensions from the following sources:

	Deferred Outflows of Resources	Deferred Inflows of Resources
Differences between expected and actual results	$ 401,867	$ 309,112
Net difference between projected and actual earnings on pension plan investments	0	533,121
Changes in assumption	436,129	0
Changes in proportion	110,396	871,938
County Contributions subsequent to measurement date	651,922	0
Total	$ 1,600,314	$ 1,714,171

$651,922 was reported as deferred outflows of resources related to pensions resulting from County contributions subsequent to the measurement date will be recognized as a reduction of the net pension liability in the year ended June 30, 2020. Other amounts reported as deferred outflows of resources and deferred inflows of resources related to pensions will be recognized in pension expense as follows:

Year ended June 30:	
2021	$(109,544)
2022	(402,402)
2023	(124,139)
2024	(66,206)
2025	(52,917)
2026	(10,571)
	$(765,779)

Actuarial Assumptions: The System's net pension liability was measured as of June 30, 2019, and the total pension liability used to calculate the net pension liability was determined by an actuarial valuation as of that date. The total pension liability was determined using the following actuarial assumptions, applied to all periods included in the measurement:

Inflation rate	2.75%
Payroll Growth	Regular: 5.50%
	Police/Fire: 6.50%
Investment Rate of Return	7.50%, including inflation
Productivity pay increase	0.50%
Projected Salary increases	Regular: 4.25% to 9.15%, depending on service
	Police/Fire: 4.55% to 13.90%, depending on service
	Rates include inflation and productivity increases
Other assumptions	Same as those used in the June 30, 2019 funding actuarial valuation

NOTE D. DETAILED NOTES ON ALL FUNDS (Continued)

13. Defined Benefit Pension Plan (Continued)

Mortality rates were based on the following:

Healthy:	Headcount-Weighted RP-2014 Annuitant Table projected to 2020 with Scale MP-2016, set forward one year for spouses and beneficiaries.
Disabled:	Headcount-Weighted RP-2014 Disabled Retiree Table, set forward four years.
Pre-Retirement	Headcount-Weighted RP-2014 Employee Table, projected to 2020 with Scale MP-2016

Actuarial assumptions used in the June 30, 2019 valuation were based on the results of the experience study for the period of July 1, 2012 through June 30, 2016. The System's policies which determine the investment portfolio target asset allocation are established by the Public Employees' Retirement Board. The asset allocation is reviewed annually and is designed to meet the future risk and return needs of the System.

The following was the Board adopted policy target asset allocation as of June 30, 2019:

Asset Class	Target Allocation	Long-Term Geometric Expected Real Rate of Return*
U.S. Stock	42%	5.50%
International Stock	18%	5.50%
U.S. Bonds	28%	0.75%
Private Markets	12%	6.65%

*As of June 30, 2019, PERS' long-term inflation assumption was 2.75%

Discount Rate: The discount rate used to measure the total pension liability was 7.50% as of June 30, 2019. The projection of cash flows used to determine the discount rate assumed that employee and employer contributions will be made at the rate specified in statute. Based on that assumption, the pension plan's fiduciary net position at June 30, 2019, was projected to be available to make all projected future benefit payments of current active and inactive employees. Therefore, the long-term expected rate of return on pension plan investments was applied to all periods of projected benefit payments to determine the total pension liability as of June 30, 2019.

Sensitivity of the County's proportionate share of the net pension liability to change in the discount rate: The following presents the County's proportionate share of the net pension liability calculated using the discount rate of 7.50 percent, as well as what the County's proportionate share of the net pension liability would be if it were calculated using a discount rate that is 1 percent higher or lower than the current rate.

	1.0% Decrease (6.5%)	Discount Rate (7.5%)	1.0% Increase (8.5%)
County's proportionate share of the net pension liability	$ 16,593,209	$ 10,716,781	$ 5,831,470

NOTE D. DETAILED NOTES ON ALL FUNDS (Continued)

13. Defined Benefit Pension Plan (Continued)

Pension Plan Fiduciary Net Position: Detailed information about the pension plan's fiduciary net position is available in the PERS Comprehensive Annual Financial Report, available on the PERS website.

Pension contributions payable: At June 30, 2020, the County reported payables to the defined benefit pension plan of $62,341 for legally required employer contributions which had not yet been remitted to PERS.

14. Post-Employment Healthcare Plan

Plan Description: The County subsidizes eligible retirees' contributions to the Public Employees' Benefits Plan (PEBP), an agent multiple-employer defined benefit postemployment health care plan administered by the State of Nevada. The plan provides medical, vision, dental and life insurance benefits to eligible retired County employees and beneficiaries. NRS 287.041 assigns the authority to establish and amend benefit provisions to the PEBP nine-member board of trustees. The plan is now closed to current County retirees. However, County employees who previously met the eligibility requirement for retirement within the Nevada Public Employees' Retirement System had the option upon retirement to enroll in coverage under the PEBP and the subsidy provided by the County was determined by their number of years of service. The PEBP issues a publicly available financial report that includes financial statements and required supplementary information. That report may be obtained by writing to Public Employee's Benefits Program, 901 S. Stewart Street, Suite 1001, Carson City, NV 89701, by calling (775) 684-7000, or by accessing the website at https://pebp.state.nv.us under Resources – Fiscal & Utilization Reports.

Employees covered by benefit terms. At June 30, 2020, the following employees were covered by the benefit terms:

Inactive employees or beneficiaries currently receiving benefit payments	22
Inactive employees entitled to but not yet receiving benefit payments	0
Active employees	0
	22

Funding Policy NRS 287.046 establishes the subsidies to be contributed toward the premium costs of the eligible retired County employees. As noted above, the County policy is to only fund retirees who retired prior to July 1, 2009. Plan members receiving benefits have their monthly contributions deducted from their pension checks based on the health plan chosen by the retiree as reduced by the amount of the subsidy. Effective July 2015, the subsidy provided to pre-Medicare retirees varies based on the type of plan selected (PPO or HMO) and by the level of coverage taken (e.g., single, two party, family, etc.). The chart below shows our understanding of monthly amounts currently payable for those with 15 years of PERS service.

Coverage Level	PPO CDHP		Statewide EPO/HMO	
	Base Subsidy	SB 552 Subsidy	Base Subsidy	SB 552 Subsidy
	15 Years of Service			
Retiree Only	$ 813.80	$163.65	$ 398.00	$ (11.66)
Retiree + Spouse	1,389.86	419.51	630.93	(28.22)
Retiree + Child(ren)	1,212.52	384.79	527.69	(5.39)
Retiree + Family	1,788.58	640.65	760.62	(21.95)

All Medicare eligible retirees participate in a Medicare Exchange with PEBP providing a service related contribution to a Health Reimbursement Arrangement (HRA) equal to $13 per month per year of service (maximum $260 per month). The contribution requirements of plan members and the County are established and amended by the PEBP board of trustees. As a participating employer, the County is billed for the subsidy on a monthly basis and is legally required under NRS 287.023 to provide for it.

NOTE D. DETAILED NOTES ON ALL FUNDS (Continued)

14. Post-Employment Healthcare Plan (Continued)

For fiscal year 2020, the County contributed $28,869 to the plan for current premiums. The County did not prefund any future benefits.

Important Dates used in the Valuation:

Valuation Date:	June 30, 2019
Measurement Date:	June 30, 2019
Measurement Period:	June 30, 2018 to June 30, 2019
Fiscal Year End:	June 30, 2020

Significant Results and Differences from the Prior Valuation:

There were no changes in benefit terms from the prior valuation. Updates were made to the discount rate, to the mortality assumptions, and to assumed future healthcare trends. Differences between projected and actual results were recognized as plan experience.

Total Other Post-Employment Benefits (OPEB) Liability

The County's OPEB liability of $521,004 was measured as of June 30, 2019 and determined by actuarial valuation as of that date.

Actuarial Assumptions and Other Inputs: The total OPEB liability in the June 30, 2019, actuarial valuation was determined using the following actuarial assumptions and other inputs, applied to all periods included in the measurement:

	PEBP
Inflation rate	2.50%
Salary Increase	Not applicable; there are no active employees in this plan.
Discount Rate	2.79%
Healthcare Cost Trend Rates	Pre-Medicare: 5.40% fluctuating down to 4.50% by 2076. Post-Medicare: 4.50% for all years.
Retirees' share of benefit-related costs	0%

The discount rate was based on the S & P General Obligation Municipal Bond 20 year High Grade Index.

Mortality rates were based on the NVPERS 2019 experience study with improvements using the Macleod Watts Scale for 2020.

Actuarial assumptions used in the June 30, 2020, valuation were based on the results of an actuarial experience study for the period of June 30, 2019, to June 30, 2020.

NOTE D. DETAILED NOTES ON ALL FUNDS (Continued)

14. Post-Employment Healthcare Plan (Continued)

Changes in the Total OPEB Liability

	PEBP
Service cost	$ 0
Interest	12,160
Changes of benefit terms	0
Differences between expected and actual experience	117,649
Changes in assumptions or other inputs	3,745
Benefit payments	(41,195)
Net changes	92,359
Net OPEB obligation - beginning of the year	428,645
Net OPEB obligation - end of year	$ 521,004

Changes of assumptions and other inputs reflect a change in the discount rate from 2.98% as of June 30, 2019, to 2.79% as of June 30, 2020.

Sensitivity of the County's total OPEB liability to changes in the discount rate. The following presents the total OPEB liability of the County, as well as what the County's total OPEB liability would be if it were calculated using a discount rate that is 1 percent higher or lower than the current rate.

	1.0% Decrease (1.79%)	Discount Rate (2.79%)	1.0% Increase (3.79%)
PEBP	$ 588,220	$ 521,004	$ 465,239

Sensitivity of the County's total OPEB liability to changes in the healthcare cost trend rates. The following presents the total OPEB liability of the County, as well as what the County's total OPEB liability would be if it were calculated using healthcare cost trend rates that are 1 percent higher or lower than the current healthcare cost trend rates:

	1.0% Decrease	Discount Rate	1.0% Increase
PEBP	$ 467,646	$ 521,004	$ 583,773

OPEB Expense, Deferred Outflows of Resources, and Deferred Inflows of Resources Related to OPEB

For the year ended June 30, 2020, the County recognized OPEB expense of $104,686. At June 30, 2020, the County reported deferred inflows and outflows of resources related to pensions from the following sources:

	Deferred Outflows of Resources	Deferred Inflows of Resources
Differences between expected and actual results	$ 0	$ 0
Changes of assumptions or other inputs	0	0
County Contributions subsequent to measurement date	28,869	0
Total	$ 28,869	$ 0

NOTE D. DETAILED NOTES ON ALL FUNDS (Continued)

14. Post-Employment Healthcare Plan (Continued)

OPEB Expense, Deferred Outflows of Resources, and Deferred Inflows of Resources Related to OPEB

$28,869 reported as deferred outflows of resources related to OPEB resulting from County contributions subsequent to the measurement date will be recognized as a reduction of the total OPEB liability in the year ended June 30, 2021. There were no other amounts reported as deferred outflows of resources and deferred inflows of resources related to OPEB to be recognized as OPEB expense.

15. Water Delivery Teaming Agreement

The Water District has entered into a water teaming agreement. The purpose of the agreement is to develop a water infrastructure and provide wholesale water to adjoining water districts and/or developers who require water. Investment to develop the water sources are funded by the partner. The Water District is not required to provide funding. Should projects fail, the Water District has no liability for costs incurred by the partner. If the projects are completed and revenues are generated from the sale of water, revenues collected will be applied to the investment of the partner until paid in full for the successful projects. After payment of project expenditures, the Water District will be entitled to 50 percent of remaining monies. Should the Water District withdraw from the agreement, the Water District will be required to reimburse the partner's investment costs. Revenues, if any, from water sales are recorded in the Lincoln County Water District funds.

16. Disposal of Operations – Tri-County Weed Control

On October 1, 2019, the County transferred the assets and liabilities comprising the Tri-County Weed Control operations to White Pine County, Nevada. As a result of the transfer, the County recognized a loss of $516,980 on the disposal of its operations as a special item, which included $313,853 in cash and $203,127 of capital assets. This activity was recorded in the Tri-County Weed Control Special Revenue Fund. During the current year revenues totaled $328,494 and the general government expenditures totaled $186,640.

17. Disposal of Operations – Pioche Public Utility Electric Operations

On October 7, 2019, the County approved the Pioche Town Board's recommendation that it is in the best interest of the residents of the Town of Pioche that the ownership and management of the electrical utility for the Town of Pioche be transferred to the Lincoln County Power District on or before December 1, 2019. As a result of the transfer, the County recognized a loss of $223,875 on the disposal of its operations as a special item, which included a loss of $349,430 of cash and capital assets, a gain of $125,407 on net pension liability, and a gain of $148 on OPEB liability. This activity was recorded in the Pioche Public Utility Electric Enterprise Fund. During the current year operating revenues totaled $260,233, operating expenses totaled $307,103, and non-operating revenues and expenses totaled $27,187.

REQUIRED SUPPLEMENTARY INFORMATION

LINCOLN COUNTY, NEVADA
REQUIRED SUPPLEMENTARY INFORMATION
MAJOR FUND - GENERAL FUND
SCHEDULE OF REVENUES, EXPENDITURES AND CHANGES IN FUND BALANCE
BUDGET (BUDGETARY BASIS) AND ACTUAL
Year Ended June 30, 2020

	Original Budget	Final Budget	Actual	Variance With Final Budget Positive (Negative)
Revenues:				
Taxes:				
Property taxes	$ 2,324,465	$ 2,324,465	$ 2,268,713	$ (55,752)
Licenses and permits:				
Business licenses	7,200	7,200	10,685	3,485
Liquor licenses	5,100	5,100	6,070	970
Gaming licenses	5,200	5,200	4,005	(1,195)
Marriage licenses	650	650	336	(314)
Total licenses and permits	18,150	18,150	21,096	2,946
Intergovernmental:				
Gaming tax	141,000	141,000	127,467	(13,533)
Private car line tax	4,100	4,100	-	(4,100)
Virgin Valley Water District	7,000	7,000	10,856	3,856
Consolidated tax	1,388,703	1,388,703	1,420,022	31,319
Grants	56,262	56,262	21,610	(34,652)
Lincoln County Water District contract	18,000	18,000	18,000	-
Coyote Springs GID dissolution	-	-	916,307	916,307
Marijuana fees	88,235	88,235	88,270	35
Fish and wildlife	-	-	2,559	2,559
Total intergovernmental	1,703,300	1,703,300	2,605,091	901,791
Charges for services:				
Clerk fees	14,000	14,000	9,543	(4,457)
Recorder fees	50,000	50,000	51,923	1,923
Assessor commissions	65,500	65,500	40,986	(24,514)
Sheriff fees	2,500	2,500	9,830	7,330
Tax penalties and costs	45,000	45,000	50,574	5,574
District attorney fees	500	500	1	(499)
Civil fees	-	-	3,217	3,217
Security contract	122,000	122,000	122,000	-
Caliente police contract	75,000	75,000	64,800	(10,200)
Caliente court contract	7,000	7,000	3,500	(3,500)
Spay & neuter license plate fees	1,000	1,000	-	(1,000)
Total charges for services	382,500	382,500	356,374	(26,126)
Fines and forfeitures:				
Fines and forfeitures	360,000	360,000	254,615	(105,385)
Miscellaneous:				
Investment income	10,000	10,000	222,243	212,243
Rent, sales, refunds	40,000	40,000	32,742	(7,258)
Excess proceeds	-	-	24,697	24,697
Other	5,000	5,000	10,861	5,861
Total miscellaneous	55,000	55,000	290,543	235,543
Total revenues	$ 4,843,415	$ 4,843,415	$ 5,796,432	$ 953,017

See accompanying notes to required supplementary information.

LINCOLN COUNTY, NEVADA
REQUIRED SUPPLEMENTARY INFORMATION
MAJOR FUND - GENERAL FUND
SCHEDULE OF REVENUES, EXPENDITURES AND CHANGES IN FUND BALANCE
BUDGET (BUDGETARY BASIS) AND ACTUAL (CONTINUED)
Year Ended June 30, 2020

	Original Budget	Final Budget	Actual	Variance With Final Budget Positive (Negative)
General government:				
Administration:				
County commissioners:				
Salaries and wages	$ 109,887	$ 109,887	$ 106,505	$ 3,382
Employee benefits	74,253	74,253	68,948	5,305
Services and supplies	37,500	37,500	24,430	13,070
Total county commissioners	221,640	221,640	199,883	21,757
Executive officer:				
Salaries and wages	26,603	26,603	39,066	(12,463)
Employee benefits	17,315	17,315	23,846	(6,531)
Services and supplies	5,150	5,150	3,394	1,756
Total executive officer	49,068	49,068	66,306	(17,238)
Clerk:				
Salaries and wages	125,667	125,667	108,256	17,411
Employee benefits	54,668	54,668	48,888	5,780
Services and supplies	36,700	36,700	10,912	25,788
Total clerk	217,035	217,035	168,056	48,979
Treasurer:				
Salaries and wages	120,043	120,043	118,043	2,000
Employee benefits	53,684	53,684	53,118	566
Services and supplies	17,600	17,600	11,669	5,931
Total treasurer	191,327	191,327	182,830	8,497
Auditor and recorder:				
Salaries and wages	133,915	133,915	134,367	(452)
Employee benefits	57,180	57,180	65,811	(8,631)
Services and supplies	20,300	20,300	12,530	7,770
Total auditor and recorder	211,395	211,395	212,708	(1,313)
Assessor:				
Salaries and wages	152,146	152,146	159,493	(7,347)
Employee benefits	76,576	76,576	69,694	6,882
Services and supplies	23,700	23,700	11,776	11,924
Total assessor	252,422	252,422	240,963	11,459
Grant administrator:				
Salaries and wages	59,779	59,779	19,737	40,042
Employee benefits	21,608	21,608	7,486	14,122
Services and supplies	7,000	7,000	1,701	5,299
Total grant administrator	88,387	88,387	28,924	59,463

See accompanying notes to required supplementary information.

LINCOLN COUNTY, NEVADA
REQUIRED SUPPLEMENTARY INFORMATION
MAJOR FUND - GENERAL FUND
SCHEDULE OF REVENUES, EXPENDITURES AND CHANGES IN FUND BALANCE
BUDGET (BUDGETARY BASIS) AND ACTUAL (CONTINUED)
Year Ended June 30, 2020

	Original Budget	Final Budget	Actual	Variance With Final Budget Positive (Negative)
General government (Continued):				
Business license:				
Salaries and wages	$ 12,385	$ 12,385	$ 7,808	$ 4,577
Employee benefits	6,563	6,563	2,055	4,508
Services and supplies	1,500	1,500	682	818
Total business license	20,448	20,448	10,545	9,903
Buildings and grounds:				
Pioche:				
Salaries and wages	34,292	34,292	39,421	(5,129)
Employee benefits	10,173	10,173	3,553	6,620
Services and supplies	133,825	133,825	101,469	32,356
Total Pioche	178,290	178,290	144,443	33,847
Alamo:				
Salaries and wages	8,208	8,208	8,785	(577)
Employee benefits	857	857	13,435	(12,578)
Services and supplies	22,000	22,000	10,026	11,974
Total Alamo	31,065	31,065	32,246	(1,181)
Total buildings and grounds	209,355	209,355	176,689	32,666
Other general expenses:				
Employee benefits	42,000	42,000	28,141	13,859
Services and supplies	199,756	199,756	151,763	47,993
Total other general expenses	241,756	241,756	179,904	61,852
Total general government	1,702,833	1,702,833	1,466,808	236,025

See accompanying notes to required supplementary information.

LINCOLN COUNTY, NEVADA
REQUIRED SUPPLEMENTARY INFORMATION
MAJOR FUND - GENERAL FUND
SCHEDULE OF REVENUES, EXPENDITURES AND CHANGES IN FUND BALANCE
BUDGET (BUDGETARY BASIS) AND ACTUAL (CONTINUED)
Year Ended June 30, 2020

	Original Budget	Final Budget	Actual	Variance With Final Budget Positive (Negative)
Public safety:				
Sheriff:				
Salaries and wages	$ 873,501	$ 873,501	$ 829,904	$ 43,597
Employee benefits	535,433	535,433	521,446	13,987
Services and supplies	210,681	210,681	200,116	10,565
Total sheriff	1,619,615	1,619,615	1,551,466	68,149
Emergency management:				
Salaries and wages	28,486	28,486	25,075	3,411
Employee benefits	12,555	12,555	10,562	1,993
Services and supplies	5,500	5,500	3,242	2,258
Total emergency management	46,541	46,541	38,879	7,662
Caliente contract:				
Salaries and wages	90,301	90,301	87,416	2,885
Employee benefits	52,330	52,330	53,092	(762)
Services and supplies	4,600	4,600	875	3,725
Total Caliente contract	147,231	147,231	141,383	5,848
Total public safety	1,813,387	1,813,387	1,731,728	81,659
Judicial:				
District court:				
Salaries and wages	118,245	118,245	128,945	(10,700)
Services and supplies	258,700	258,700	181,829	76,871
Total district court	376,945	376,945	310,774	66,171
District attorney:				
Salaries and wages	224,974	224,974	232,201	(7,227)
Employee benefits	98,072	98,072	88,405	9,667
Services and supplies	28,000	28,000	14,777	13,223
Total district attorney	351,046	351,046	335,383	15,663

See accompanying notes to required supplementary information.

LINCOLN COUNTY, NEVADA
REQUIRED SUPPLEMENTARY INFORMATION
MAJOR FUND - GENERAL FUND
SCHEDULE OF REVENUES, EXPENDITURES AND CHANGES IN FUND BALANCE
BUDGET (BUDGETARY BASIS) AND ACTUAL (CONTINUED)
Year Ended June 30, 2020

	Original Budget	Final Budget	Actual	Variance With Final Budget Positive (Negative)
Judicial (Continued):				
Law library	$ 8,000	$ 8,000	$ 6,762	$ 1,238
Public guardian	2,000	2,000	-	2,000
Public administrator	2,000	2,000	551	1,449
Justice court:				
Juvenile officers:				
Salaries and wages	62,317	62,317	-	62,317
Employee benefits	35,796	35,796	-	35,796
Services and supplies	20,000	20,000	42,221	(22,221)
Total juvenile officers	118,113	118,113	42,221	75,892
Alamo:				
Salaries and wages	129,504	129,504	130,986	(1,482)
Employee benefits	66,344	66,344	61,747	4,597
Services and supplies	17,250	17,250	17,210	40
Total Alamo	213,098	213,098	209,943	3,155
Meadow Valley:				
Salaries and wages	114,604	114,604	116,076	(1,472)
Employee benefits	62,420	62,420	63,937	(1,517)
Services and supplies	24,900	24,900	12,631	12,269
Total Meadow Valley	201,924	201,924	192,644	9,280
Total judicial	1,273,126	1,273,126	1,098,278	174,848
Health:				
Public Nurse:				
Salaries and wages	14,196	14,196	14,483	(287)
Employee benefits	1,482	1,482	1,527	(45)
Services and supplies	45,786	45,786	45,866	(80)
Total Meadow Valley	61,464	61,464	61,876	(412)
Animal Control:				
Services and supplies	1,000	1,000	-	1,000
Total health	62,464	62,464	61,876	588
Total expenditures	$ 4,851,810	$ 4,851,810	$ 4,358,690	$ 493,120

See accompanying notes to required supplementary information.

LINCOLN COUNTY, NEVADA
REQUIRED SUPPLEMENTARY INFORMATION
MAJOR FUND - GENERAL FUND
SCHEDULE OF REVENUES, EXPENDITURES AND CHANGES IN FUND BALANCE
BUDGET (BUDGETARY BASIS) AND ACTUAL (CONTINUED)
Year Ended June 30, 2020

	Original Budget	Final Budget	Actual	Variance With Final Budget Positive (Negative)
Excess (deficiency) of revenues over expenditures	$ (8,395)	$ (8,395)	$ 1,437,742	$ 1,446,137
Other financing sources (uses):				
Operating transfers out	(258,911)	(258,911)	(50,000)	208,911
Net change in fund balance	(267,306)	(267,306)	1,387,742	1,655,048
Fund balance:				
Beginning of year	451,861	451,861	953,203	501,342
End of year	$ 184,555	$ 184,555	$ 2,340,945	$ 2,156,390

See accompanying notes to required supplementary information.

LINCOLN COUNTY, NEVADA
REQUIRED SUPPLEMENTARY INFORMATION
MAJOR FUND - ROAD SPECIAL REVENUE FUND
SCHEDULE OF REVENUES, EXPENDITURES AND CHANGES IN FUND BALANCE
IN FUND BALANCE - BUDGET AND ACTUAL
Year Ended June 30, 2020

	Original Budget	Final Budget	Actual	Variance With Final Budget Positive (Negative)
Revenues:				
Intergovernmental:				
Gasoline tax $2.35	$ 1,080,737	$ 1,080,737	$ 972,480	$ (108,257)
Gasoline tax $1.25	620,707	620,707	560,862	(59,845)
Gasoline tax $1.75	49,452	49,452	50,546	1,094
Optional $0.01 tax	23,977	23,977	24,516	539
National forest	-	-	14,947	14,947
Total intergovernmental	1,774,873	1,774,873	1,623,351	(151,522)
Miscellaneous:				
Investment income	800	800	17,464	16,664
Other	15,000	15,000	-	(15,000)
Total miscellaneous	15,800	15,800	17,464	1,664
Total revenues	1,790,673	1,790,673	1,640,815	(149,858)
Expenditures:				
Current:				
Public works:				
Highways and streets:				
Salaries and wages	725,209	725,209	660,308	64,901
Employee benefits	330,198	330,198	294,415	35,783
Services and supplies	801,700	801,700	660,597	141,103
Capital outlay	325,000	325,000	-	325,000
Total expenditures	2,182,107	2,182,107	1,615,320	566,787
Excess (deficiency) of revenues over expenditures	(391,434)	(391,434)	25,495	416,929
Other financing sources (uses):				
Operating transfers out	(100,000)	(100,000)	(100,000)	-
Sale of capital assets	-	-	1,000	1,000
Total other financing sources (uses)	(100,000)	(100,000)	(99,000)	1,000
Net change in fund balance	(491,434)	(491,434)	(73,505)	417,929
Fund balance:				
Beginning of year	494,829	494,829	875,274	380,445
End of year	$ 3,395	$ 3,395	$ 801,769	$ 798,374

See accompanying notes to required supplementary information.

LINCOLN COUNTY, NEVADA
REQUIRED SUPPLEMENTARY INFORMATION
MAJOR FUND - LINCOLN COUNTY WATER DISTRICT
WATER RESOURCES SPECIAL REVENUE FUND
SCHEDULE OF REVENUES, EXPENDITURES AND CHANGES IN FUND BALANCE
IN FUND BALANCE - BUDGET AND ACTUAL
Year Ended June 30, 2020

	Original Budget	Final Budget	Actual	Variance With Final Budget Positive (Negative)
Revenues:				
Miscellaneous:				
Investment income	$ 500	$ 500	$ 139,972	$ 139,472
Expenditures:				
Current:				
General government:				
Services and supplies	1,356,441	1,356,441	-	1,356,441
Excess (deficiency) of revenues over expenditures	(1,355,941)	(1,355,941)	139,972	1,495,913
Other financing sources (uses):				
Operating transfers out:	-	-	(200,000)	(200,000)
Net change in fund balance	(1,355,941)	(1,355,941)	(60,028)	1,295,913
Fund balance:				
Beginning of year	1,355,941	1,355,941	2,841,210	1,485,269
End of year	$ -	$ -	$ 2,781,182	$ 2,781,182

See accompanying notes to required supplementary information.

LINCOLN COUNTY, NEVADA
REQUIRED SUPPLEMENTARY INFORMATION
MAJOR FUND - LINCOLN COUNTY LAND ACT SPECIAL USE - SPECIAL REVENUE FUND
SCHEDULE OF REVENUES, EXPENDITURES AND CHANGES IN FUND BALANCE
IN FUND BALANCE - BUDGET AND ACTUAL
Year Ended June 30, 2020

	Original Budget	Final Budget	Actual	Variance With Final Budget Positive (Negative)
Revenues:				
Intergovernmental:				
Other	$ -	$ -	$ 10,871	$ 10,871
Miscellaneous:				
Investment income	6,000	6,000	93,521	87,521
Loan interest income	-	-	7,189	7,189
Rent	30,000	30,000	30,276	276
Total miscellaneous	36,000	36,000	130,986	94,986
Total revenues	36,000	36,000	141,857	105,857
Expenditures:				
Current:				
General government:				
Salaries and wages	-	-	179,116	(179,116)
Employee benefits	-	-	7,701	(7,701)
Services and supplies	235,625	235,625	397,490	(161,865)
Capital outlay	550,000	550,000	-	550,000
Total expenditures	785,625	785,625	584,307	201,318
Excess (deficiency) of revenues over expenditures	(749,625)	(749,625)	(442,450)	307,175
Other financing sources (uses):				
Operating transfers out:				
Lincoln Co. Land Act - Grant Match	151	151	151	-
Net change in fund balance	(749,474)	(749,474)	(442,299)	307,175
Fund balance:				
Beginning of year	3,544,724	3,544,724	3,860,047	315,323
End of year	$ 2,795,250	$ 2,795,250	$ 3,417,748	$ 622,498

See accompanying notes to required supplementary information.

LINCOLN COUNTY, NEVADA
REQUIRED SUPPLEMENTARY INFORMATION
MAJOR FUND - COUNTY GRANT - SPECIAL REVENUE FUND
SCHEDULE OF REVENUES, EXPENDITURES AND CHANGES IN FUND BALANCE
IN FUND BALANCE - BUDGET AND ACTUAL
Year Ended June 30, 2020

	Original Budget	Final Budget	Actual	Variance With Final Budget Positive (Negative)
Revenues:				
Intergovernmental:				
Grants	$ -	$ 1,211,423	$ 915,171	$ (296,252)
Miscellaneous:				
Investment income	-	-	1,321	1,321
Total revenues	-	1,211,423	916,492	(294,931)
Expenditures:				
Current:				
General government	-	506,815	335,427	171,388
Public safety	-	255,018	234,932	20,086
Public works	-	127,237	125,206	2,031
Welfare	-	137,188	106,227	30,961
Culture and recreation	-	185,165	174,446	10,719
Total expenditures	-	1,211,423	976,238	235,185
Excess (deficiency) of revenues over expenditures	-	-	(59,746)	(59,746)
Other financing sources (uses):				
Operating transfers in	-	-	53,835	53,835
Net change in fund balance	-	-	(5,911)	(5,911)
Fund balance:				
Beginning of year	63,142	63,142	64,145	1,003
End of year	$ 63,142	$ 63,142	$ 58,234	$ (4,908)

See accompanying notes to required supplementary information.

LINCOLN COUNTY, NEVADA
REQUIRED SUPPLEMENTARY INFORMATION
RECONCILIATION OF THE GENERAL FUND (BUDGETARY BASIS)
TO THE GENERAL FUND (GAAP BASIS)
SCHEDULE OF REVENUE, EXPENDITURES, AND CHANGES IN FUND BALANCES
For the Year Ended June 30, 2020

	General Fund Budgetary Basis	Internally Reported Funds	General Fund GAAP Basis
Revenues:			
Taxes	$ 2,268,713	-	$ 2,268,713
Licenses and permits	21,096	-	21,096
Intergovernmental	2,605,091	-	2,605,091
Charges for services	356,374	14,833	371,207
Fines and forfeitures	254,615	-	254,615
Miscellaneous	290,543	30,280	320,823
Total revenues	5,796,432	45,113	5,841,545
Expenditures:			
Current:			
General government	1,466,808	78,383	1,545,191
Public safety	1,731,728	-	1,731,728
Judicial	1,098,278	-	1,098,278
Public works	-	83,622	83,622
Health	61,876	-	61,876
Total expenditures	4,358,690	162,005	4,520,695
Excess (deficiency) of revenues over expenditures	1,437,742	(116,892)	1,320,850
Other financing sources (uses):			
Operating transfers in	-	75,000	75,000
Operating transfers out	(50,000)	-	(50,000)
Total other financing sources (uses)	(50,000)	75,000	25,000
Net change in fund balance	1,387,742	(41,892)	1,345,850
Fund balance:			
Beginning of year	953,203	696,274	1,649,477
End of year	$ 2,340,945	$ 654,382	$ 2,995,327

See accompanying notes to required supplementary information.

LINCOLN COUNTY, NEVADA
REQUIRED SUPPLEMENTARY INFORMATION
SCHEDULE OF CHANGES IN THE COUNTY'S TOTAL OPEB LIABILITY AND RELATED RATIOS
For the Year Ended June 30, 2020

	6/30/2020	6/30/2019	6/30/2018
Total OPEB Liability			
Service cost	$ -	$ -	$ -
Interest	12,160	17,218	27,562
Changes of benefit terms	-	-	-
Differences between expected and actual experience	117,649	-	-
Changes of assumptions or other inputs	3,745	(114,834)	(270,391)
Benefit Payments	(41,195)	(51,515)	(59,983)
Net Change in total OPEB liability	92,359	(149,131)	(302,812)
Total OPEB liability - beginning	428,645	577,776	880,588
Total OPEB liability - ending	$ 521,004	$ 428,645	$ 577,776
Covered-employee payroll	$ -	$ -	$ -
Total OPEB liability as a percentage of covered-employee payroll	0.00%	0.00%	0.00%

Note: PEBP closed to new County participants as of November 1, 2008; therefore, covered payroll is zero.

Changes of assumptions and other inputs reflect the effects of changes in the discount rate each period. The following are the discount rates used in each period.

6/30/2020	2.79
6/30/2019	2.98
6/30/2018	3.13
6/30/2017	2.68

See accompanying notes to required supplementary information.

LINCOLN COUNTY, NEVADA
REQUIRED SUPPLEMENTARY INFORMATION
SCHEDULE OF THE COUNTY'S CONTRIBUTIONS TO THE
PUBLIC EMPLOYEES' RETIREMENT SYSTEM OF THE STATE OF NEVADA
For the Year Ended June 30, 2020

Year Ended June 30	Contractually Determined Contributions	Contributions in Relation to the Actuarially Determined Contributions	Contribution Deficiency (Excess)	Covered Employee Payroll	Contributions as a Percentage of Covered Employee Payroll
2014	$ 1,164,559	$ 1,164,559	$ -	$4,098,726	28.41%
2015	1,232,695	1,232,695	-	4,381,264	28.14%
2016	1,321,892	1,321,892	-	4,218,947	31.33%
2017	1,303,882	1,303,882	-	4,687,633	27.82%
2018	647,630	647,630	-	4,770,281	13.58%
2019	636,643	636,643	-	4,712,297	13.51%
2020	651,922	651,922	-	4,925,175	13.24%

Information previous to 2013 is not available.

Beginning with the year-ended 2018, all contributions shown reflect employer-paid contributions only, and employer-paid member contributions are excluded. Actuarially Determined Contributions above are based on actuarially determined contribution rates (employer portion only) from the most recent rate-setting year prior to the year shown, applied to covered payroll for year shown.

See accompanying notes to required supplementary information.

LINCOLN COUNTY, NEVADA
REQUIRED SUPPLEMENTARY INFORMATION
SCHEDULE OF THE COUNTY'S PROPORTIONATE SHARE OF THE NET PENSION LIABILITY
PUBLIC EMPLOYEES' RETIREMENT SYSTEM OF THE STATE OF NEVADA
For the Year Ended June 30, 2020

Reporting Year Ended June 30:	County's proportion of the net pension liability	County's proportionate share of the net pension liability	County's covered-employee payroll	County's proportionate share of the net pension liability as a percentage of its covered-employee payroll	Plan fiduciary net position as a percentage of the total pension liability
2015	0.08508%	8,866,756	4,098,726	216.33%	76.31%
2016	0.08864%	10,157,192	4,381,264	231.83%	75.10%
2017	0.08800%	11,842,446	4,218,947	280.70%	72.20%
2018	0.08407%	11,180,767	4,687,633	238.52%	74.40%
2019	0.08224%	11,215,383	4,770,281	235.11%	75.20%
2020	0.07859%	10,716,781	4,712,297	227.42%	76.50%

Fiscal year 2015 was the first year of implementation, therefore, only five years are shown.

The County's proportionate share of the net pension liability is based upon the measurment taken on June 30th, of the prior year.

See accompanying notes to required supplementary information.

Note 1 – Explanation of Differences between General Fund (Budgetary Basis) and General Fund (GAAP Basis)

The accompanying Reconciliation of the General Fund (Budgetary Basis) to the General Fund (GAAP Basis) presents balances combined for external financial reporting purposes.

With the implementation of GASB Statement 54, *Fund Balance Reporting and Governmental Fund Type Definitions*, the budgetary basis of accounting for the General Fund differs from generally accepted accounting principles (GAAP).

Guidance in GASB Statement 54 changed the definition of Special Revenue Funds for financial reporting purposes. Pursuant to statute, budget comparisons are required using the budget adopted. Six internally reported special revenue funds of the County (Stabilization, Planning, Rachel Jones Memorial Cemetery, Flood Control, Special Projects, Lincoln County Land Act Emergency Disaster, and Lincoln County Water Emergency Disaster) are combined with the General Fund for external reporting purposes to conform with generally accepted accounting principles.

Note 2 – Net Pension Liability

Changes in benefit terms. There have been no changes in benefit terms since the last valuation.

Changes in assumptions. Changes of assumptions and other inputs reflect the effects of changes in the discount rate each period.

Note 3 – Other Post-Employment Benefits Liability

Changes in benefit terms. There have been no changes in benefit terms since the last valuation.

Changes in assumptions. Changes of assumptions and other inputs reflect the effects of changes in the discount rate each period and the change of valuation from the alternative measurement method to the use of an actuary.

SUPPLEMENTARY INFORMATION

NONMAJOR GOVERNMENTAL FUNDS

Combining statements of all nonmajor governmental activity

LINCOLN COUNTY, NEVADA
NONMAJOR GOVERNMENTAL FUNDS
COMBINING BALANCE SHEET
June 30, 2020

	Nonmajor Special Revenue Funds	Nonmajor Capital Projects Funds	Totals
ASSETS			
Pooled cash and investments	$ 9,996,258	$ 1,410,880	$ 11,407,138
Interest receivable	23,904	4,871	28,775
Taxes receivable	19,685	1,555	21,240
Special assessment receivable	-	79,764	79,764
Due from other governments	82,464	-	82,464
Due from others	20,128	-	20,128
Inventory	8,091	-	8,091
Prepaid expense	33,554	-	33,554
Interfund receivable	170,000	-	170,000
Total assets	$ 10,354,084	$ 1,497,070	$ 11,851,154
LIABILITIES			
Accounts payable	$ 237,795	$ -	$ 237,795
Accrued payroll and benefits	33,405	-	33,405
Unearned revenue	95,830	-	95,830
Total liabilities	367,030	-	367,030
DEFERRED INFLOWS OF RESOURCES			
Unavailable revenue - property taxes	10,663	1,359	12,022
FUND BALANCE			
Nonspendable	40,091	-	40,091
Restricted for:			
Capital projects	-	1,495,711	1,495,711
Unincorporated towns	347,694	-	347,694
Multi-species conservation	903,800	-	903,800
General government	71,619	-	71,619
Public safety	51,290	-	51,290
Judicial	286,906	-	286,906
Public works	931,040	-	931,040
Health	167	-	167
Welfare	889,039	-	889,039
Culture and recreation	267,951	-	267,951
Community support	258,275	-	258,275
Intergovernmental	3,597	-	3,597
Committed for:			
Land act	138,312	-	138,312
Water	2,864,529	-	2,864,529
Lincoln County Water District	701,379		701,379
General government	2,166,944	-	2,166,944
Public works	23,382	-	23,382
Health	33,571	-	33,571
Unassigned	(3,195)	-	(3,195)
Total fund balance	9,976,391	1,495,711	11,472,102
Total liabilities, deferred inflows of resources, and fund balance	$ 10,354,084	$ 1,497,070	$ 11,851,154

LINCOLN COUNTY, NEVADA
NONMAJOR GOVERNMENTAL FUNDS
COMBINING STATEMENT OF REVENUES, EXPENDITURES,
AND CHANGES IN FUND BALANCE
Year Ended June 30, 2020

	Nonmajor Special Revenue Funds	Nonmajor Capital Projects Funds	Totals
Revenues:			
Taxes	$ 867,478	$ 116,425	$ 983,903
Licenses and permits	4,855	-	4,855
Intergovernmental	1,564,830	109	1,564,939
Charges for services	615,490	-	615,490
Fines and forfeitures	30,503	-	30,503
Special assessment	-	186,003	186,003
Miscellaneous	409,717	60,855	470,572
Total revenues	3,492,873	363,392	3,856,265
Expenditures:			
Current:			
General government	1,183,637	-	1,183,637
Public safety	39,935	-	39,935
Judicial	112,845	-	112,845
Public works	75,228	-	75,228
Health	252,704	-	252,704
Welfare	524,842	-	524,842
Culture and recreation	345,391	-	345,391
Community support	247,029	-	247,029
Intergovernmental	119,144	8,169	127,313
Capital outlay	-	148,804	148,804
Debt service:			
Principal	24,157	77,642	101,799
Interest	1,784	5,269	7,053
Total expenditures	2,926,696	239,884	3,166,580
Excess (deficiency) of revenues over expenditures	566,177	123,508	689,685
Other financing sources (uses):			
Operating transfers in	343,308	220,503	563,811
Operating transfers out	(332,294)	(120,503)	(452,797)
Capital lease proceeds	-	100,300	100,300
Total other financing sources (uses)	11,014	200,300	211,314
Net change in fund balance before special items	577,191	323,808	900,999
Special items:			
Disposal of Tri-County Weed Control	(313,853)	-	(313,853)
Net change in fund balance	263,338	323,808	587,146
Fund balance:			
Beginning of year	9,713,053	1,171,903	10,884,956
End of year	$ 9,976,391	$ 1,495,711	$ 11,472,102

MAJOR FUNDS

GENERAL FUND

The General Fund is used to account for resources traditionally associated with government which are not required legally or by sound financial management to be accounted for in another fund.

ROAD FUND

The Road Fund is used to account for revenues and expenditures utilized to maintain County roads.

LINCOLN COUNTY WATER DISTRICT WATER RESOURCES FUND

The Lincoln County Water District Water Resources Fund is used to account for general activities of the District, a blended component unit of the government.

LINCOLN COUNTY LAND ACT SPECIAL USE FUND

The Lincoln County Land Act Special Use Fund is used to account for land sale monies to be spent per County ordinances.

COUNTY GRANT FUND

The County Grant Fund is used to account for state and federal grant monies received to be spent on specified projects.

LINCOLN COUNTY, NEVADA
RECONCILIATION OF THE GENERAL FUND (BUDGETARY BASIS)
TO THE GENERAL FUND (GAAP BASIS)
BALANCE SHEET
June 30, 2020

	General Fund Budgetary Basis	Internally Reported Funds	General Fund GAAP Basis
ASSETS			
Pooled cash and investments	$ 2,327,137	$ 662,281	$ 2,989,418
Interest receivable	6,680	1,049	7,729
Taxes receivable	30,333	-	30,333
Due from other governments	291,829	-	291,829
Total assets	$ 2,655,979	$ 663,330	$ 3,319,309
LIABILITIES			
Accounts payable	$ 70,653	$ 6,229	$ 76,882
Accrued payroll and benefits	217,868	2,719	220,587
Total liabilities	288,521	8,948	297,469
DEFERRED INFLOWS OF RESOURCES			
Unavailable revenue - property taxes	26,513	-	26,513
FUND BALANCE			
Restricted for:			
Stabilization	-	137,113	137,113
Rachel Jones Cemetery	-	827	827
General government	-	357,965	357,965
Coyote Springs GID dissolution	916,307	-	916,307
Committed for:			
Planning	-	43,603	43,603
Flood Control	-	39,015	39,015
Land Act	-	9,408	9,408
Water	-	66,451	66,451
Assigned for:			
Subsequent year	1,424,638	-	1,424,638
Total fund balance	2,340,945	654,382	2,995,327
Total liabilities, deferred inflows of resources, and fund balance	$ 2,655,979	$ 663,330	$ 3,319,309

LINCOLN COUNTY, NEVADA
MAJOR FUND - GENERAL FUND (BUDGETARY BASIS)
COMPARATIVE BALANCE SHEETS
June 30, 2020 and 2019

	2020	2019
ASSETS		
Pooled cash and investments	$ 2,327,137	$ 950,225
Interest receivable	6,680	18,939
Taxes receivable	30,333	33,425
Due from other governments	291,829	249,422
Total assets	$ 2,655,979	$ 1,252,011
LIABILITIES		
Accounts payable	$ 70,653	$ 81,550
Accrued payroll and benefits	217,868	190,746
Total liabilities	288,521	272,296
DEFERRED INFLOWS OF RESOURCES		
Unavailable revenue - property taxes	26,513	26,512
FUND BALANCE		
Restricted for Coyote Springs GID	916,307	-
Assigned for subsequent year	1,424,638	451,861
Unassigned	-	501,342
Total fund balance	2,340,945	953,203
Total liabilities, deferred inflows of resources, and fund balance	$ 2,655,979	$ 1,252,011

LINCOLN COUNTY, NEVADA
MAJOR FUND - GENERAL FUND
SCHEDULE OF REVENUES, EXPENDITURES, AND CHANGES IN FUND BALANCE
BUDGET (BUDGETARY BASIS) AND ACTUAL
Year Ended June 30, 2020
(With Comparative Actual Amounts for Year Ended June 30, 2019)

	2020 Budget	2020 Actual	Variance - Positive (Negative)	2019 Actual
Revenues:				
Taxes	$ 2,324,465	$ 2,268,713	$ (55,752)	$ 2,240,230
Licenses and permits	18,150	21,096	2,946	20,717
Intergovernmental	1,703,300	2,605,091	901,791	1,677,489
Charges for services	382,500	356,374	(26,126)	295,730
Fines and forfeitures	360,000	254,615	(105,385)	361,968
Miscellaneous	55,000	290,543	235,543	214,114
Total revenues	4,843,415	5,796,432	953,017	4,810,248
Expenditures:				
Current:				
General government	1,702,833	1,466,808	236,025	1,499,110
Public safety	1,813,387	1,731,728	81,659	1,697,754
Judicial	1,273,126	1,098,278	174,848	1,122,681
Health	62,464	61,876	588	52,387
Total expenditures	4,851,810	4,358,690	493,120	4,371,932
Excess (deficiency) of revenues over expenditures	(8,395)	1,437,742	1,446,137	438,316
Other financing sources (uses):				
Operating transfers out	(258,911)	(50,000)	208,911	(258,252)
Net change in fund balance	(267,306)	1,387,742	1,655,048	180,064
Fund balance:				
Beginning of year	451,861	953,203	501,342	773,139
End of year	$ 184,555	$ 2,340,945	$ 2,156,390	$ 953,203

LINCOLN COUNTY, NEVADA
MAJOR FUND - GENERAL FUND
SCHEDULE OF REVENUES COMPARED TO BUDGET (BUDGETARY BASIS)
Year Ended June 30, 2020
(With Comparative Actual Amounts for Year Ended June 30, 2019)

	2020 Budget	2020 Actual	Variance - Positive (Negative)	2019 Actual
Revenues:				
Taxes:				
Property taxes	$ 2,324,465	$ 2,268,713	$ (55,752)	$ 2,240,230
Licenses and permits:				
Business licenses	7,200	10,685	3,485	9,945
Liquor licenses	5,100	6,070	970	6,560
Gaming licenses	5,200	4,005	(1,195)	3,750
Marriage licenses	650	336	(314)	462
Total licenses and permits	18,150	21,096	2,946	20,717
Intergovernmental:				
Gaming tax	141,000	127,467	(13,533)	132,437
Private car line tax	4,100	-	(4,100)	2
Virgin Valley Water District	7,000	10,856	3,856	2,414
Consolidated tax	1,388,703	1,420,022	31,319	1,385,248
Grants	56,262	21,610	(34,652)	66,210
Lincoln County Water District contract	18,000	18,000	-	-
Coyote Springs GID dissolution	-	916,307	916,307	-
Marijuana fees	88,235	88,270	35	88,235
Fish and wildlife	-	2,559	2,559	2,943
Total intergovernmental	1,703,300	2,605,091	901,791	1,677,489
Charges for services:				
Clerk fees	14,000	9,543	(4,457)	8,988
Recorder fees	50,000	51,923	1,923	43,074
Assessor commissions	65,500	40,986	(24,514)	40,008
Sheriff fees	2,500	9,830	7,330	6,530
Tax penalties and costs	45,000	50,574	5,574	59,542
District attorney fees	500	1	(499)	4,564
Civil fees	-	3,217	3,217	3,374
Security contract	122,000	122,000	-	61,000
Caliente police contract	75,000	64,800	(10,200)	64,800
Caliente court contract	7,000	3,500	(3,500)	3,850
Spay & neuter license plate fees	1,000	-	(1,000)	-
Total charges for services	382,500	356,374	(26,126)	295,730
Fines and forfeitures:				
Fines and forfeitures	360,000	254,615	(105,385)	361,968
Miscellaneous:				
Investment income	10,000	222,243	212,243	167,048
Rent, sales, refunds	40,000	32,742	(7,258)	38,654
Excess proceeds	-	24,697	24,697	-
Other	5,000	10,861	5,861	8,412
Total miscellaneous	55,000	290,543	235,543	214,114
Total revenues	$ 4,843,415	$ 5,796,432	$ 953,017	$ 4,810,248

LINCOLN COUNTY, NEVADA
MAJOR FUND - GENERAL FUND
SCHEDULE OF EXPENDITURES COMPARED TO BUDGET (BUDGETARY BASIS)
Year Ended June 30, 2020
(With Comparative Actual Amounts for Year Ended June 30, 2019)

	2020 Budget	2020 Actual	Variance - Positive (Negative)	2019 Actual
Expenditures:				
Current:				
General government:				
County commissioners:				
Salaries and wages	$ 109,887	$ 106,505	$ 3,382	$ 108,751
Employee benefits	74,253	68,948	5,305	63,290
Services and supplies	37,500	24,430	13,070	23,517
Total county commissioners	221,640	199,883	21,757	195,558
Executive officer:				
Salaries and wages	26,603	39,066	(12,463)	20,675
Employee benefits	17,315	23,846	(6,531)	12,511
Services and supplies	5,150	3,394	1,756	1,312
Total executive officer	49,068	66,306	(17,238)	34,498
Clerk:				
Salaries and wages	125,667	108,256	17,411	119,236
Employee benefits	54,668	48,888	5,780	51,388
Services and supplies	36,700	10,912	25,788	21,468
Total clerk	217,035	168,056	48,979	192,092
Treasurer:				
Salaries and wages	120,043	118,043	2,000	115,494
Employee benefits	53,684	53,118	566	50,062
Services and supplies	17,600	11,669	5,931	10,905
Total treasurer	191,327	182,830	8,497	176,461
Auditor and recorder:				
Salaries and wages	133,915	134,367	(452)	147,844
Employee benefits	57,180	65,811	(8,631)	62,164
Services and supplies	20,300	12,530	7,770	11,782
Total auditor and recorder	211,395	212,708	(1,313)	221,790
Assessor:				
Salaries and wages	152,146	159,493	(7,347)	152,866
Employee benefits	76,576	69,694	6,882	72,854
Services and supplies	23,700	11,776	11,924	10,558
Total assessor	252,422	240,963	11,459	236,278
Grant administrator:				
Salaries and wages	59,779	19,737	40,042	57,190
Employee benefits	21,608	7,486	14,122	20,032
Services and supplies	7,000	1,701	5,299	4,033
Total grant administrator	$ 88,387	$ 28,924	$ 59,463	$ 81,255

LINCOLN COUNTY, NEVADA
MAJOR FUND - GENERAL FUND
SCHEDULE OF EXPENDITURES COMPARED TO BUDGET (BUDGETARY BASIS)
Year Ended June 30, 2020
(With Comparative Actual Amounts for Year Ended June 30, 2019)

	2020 Budget	2020 Actual	Variance - Positive (Negative)	2019 Actual
General government (Continued):				
Business license:				
Salaries and wages	$ 12,385	$ 7,808	$ 4,577	$ 6,770
Employee benefits	6,563	2,055	4,508	1,503
Services and supplies	1,500	682	818	898
Total business license	20,448	10,545	9,903	9,171
Buildings and grounds:				
Pioche:				
Salaries and wages	34,292	39,421	(5,129)	46,141
Employee benefits	10,173	3,553	6,620	9,310
Services and supplies	133,825	101,469	32,356	104,628
Total Pioche	178,290	144,443	33,847	160,079
Alamo:				
Salaries and wages	8,208	8,785	(577)	5,634
Employee benefits	857	13,435	(12,578)	588
Services and supplies	22,000	10,026	11,974	14,446
Total Alamo	31,065	32,246	(1,181)	20,668
Total buildings and grounds	209,355	176,689	32,666	180,747
Other general expenses:				
Employee benefits	42,000	28,141	13,859	41,059
Services and supplies	199,756	151,763	47,993	130,201
Total other general expenses	241,756	179,904	61,852	171,260
Total general government	$ 1,702,833	$ 1,466,808	$ 236,025	$ 1,499,110

LINCOLN COUNTY, NEVADA
MAJOR FUND - GENERAL FUND
SCHEDULE OF EXPENDITURES COMPARED TO BUDGET (BUDGETARY BASIS)
Year Ended June 30, 2020
(With Comparative Actual Amounts for Year Ended June 30, 2019)

	2020 Budget	2020 Actual	Variance - Positive (Negative)	2019 Actual
Public safety:				
Sheriff:				
Salaries and wages	$ 873,501	$ 829,904	$ 43,597	$ 837,160
Employee benefits	535,433	521,446	13,987	506,223
Services and supplies	210,681	200,116	10,565	155,051
Capital outlay	-	-	-	24,692
Total sheriff	1,619,615	1,551,466	68,149	1,523,126
Emergency management:				
Salaries and wages	28,486	25,075	3,411	27,374
Employee benefits	12,555	10,562	1,993	9,870
Services and supplies	5,500	3,242	2,258	265
Total emergency management	46,541	38,879	7,662	37,509
Caliente contract:				
Salaries and wages	90,301	87,416	2,885	86,334
Employee benefits	52,330	53,092	(762)	49,901
Services and supplies	4,600	875	3,725	884
Total Caliente contract	147,231	141,383	5,848	137,119
Total public safety	1,813,387	1,731,728	81,659	1,697,754
Judicial:				
District court:				
Salaries and wages	118,245	128,945	(10,700)	65,512
Services and supplies	258,700	181,829	76,871	237,990
Total district court	376,945	310,774	66,171	303,502
District attorney:				
Salaries and wages	224,974	232,201	(7,227)	219,371
Employee benefits	98,072	88,405	9,667	81,086
Services and supplies	28,000	14,777	13,223	17,438
Capital outlay	-	-	-	6,424
Total district attorney	$ 351,046	$ 335,383	$ 15,663	$ 324,319

LINCOLN COUNTY, NEVADA
MAJOR FUND - GENERAL FUND
SCHEDULE OF EXPENDITURES COMPARED TO BUDGET (BUDGETARY BASIS)
Year Ended June 30, 2020
(With Comparative Actual Amounts for Year Ended June 30, 2019)

	2020 Budget	2020 Actual	Variance - Positive (Negative)	2019 Actual
Judicial (Continued):				
Law library	$ 8,000	$ 6,762	$ 1,238	$ 8,306
Public guardian	2,000	-	2,000	537
Public administrator	2,000	551	1,449	468
Juvenile officers:				
Salaries and wages	62,317	-	62,317	68,050
Employee benefits	35,796	-	35,796	31,763
Services and supplies	20,000	42,221	(22,221)	6,580
Total juvenile officers	118,113	42,221	75,892	106,393
Alamo:				
Salaries and wages	129,504	130,986	(1,482)	127,794
Employee benefits	66,344	61,747	4,597	58,074
Services and supplies	17,250	17,210	40	13,429
Total Alamo	213,098	209,943	3,155	199,297
Meadow Valley:				
Salaries and wages	114,604	116,076	(1,472)	110,558
Employee benefits	62,420	63,937	(1,517)	57,528
Services and supplies	24,900	12,631	12,269	11,773
Total Meadow Valley	201,924	192,644	9,280	179,859
Total judicial	1,273,126	1,098,278	174,848	1,122,681
Health:				
Public Nurse:				
Salaries and wages	14,196	14,483	(287)	2,132
Employee benefits	1,482	1,527	(45)	163
Services and supplies	45,786	45,866	(80)	50,092
Total Meadow Valley	61,464	61,876	(412)	52,387
Animal Control:				
Services and supplies	1,000	-	1,000	-
Total health	62,464	61,876	588	52,387
Total expenditures	$ 4,851,810	$ 4,358,690	$ 493,120	$ 4,371,932

LINCOLN COUNTY, NEVADA
MAJOR FUND - ROAD SPECIAL REVENUE FUND
COMPARATIVE BALANCE SHEETS
June 30, 2020 and 2019

	2020	2019
ASSETS		
Pooled cash and investments	$ 680,946	$ 541,005
Interest receivable	1,068	1,143
Due from other governments	246,465	438,509
Total assets	$ 928,479	$ 980,657
LIABILITIES		
Accounts payable	$ 75,835	$ 60,064
Accrued payroll and benefits	50,875	45,319
Total liabilities	126,710	105,383
FUND BALANCE		
Restricted	801,769	875,274
Total liabilities and fund balance	$ 928,479	$ 980,657

LINCOLN COUNTY, NEVADA
MAJOR FUND - ROAD SPECIAL REVENUE FUND
SCHEDULE OF REVENUES, EXPENDITURES, AND CHANGES IN FUND BALANCE - BUDGET (GAAP BASIS) AND ACTUAL
Year Ended June 30, 2020
(With Comparative Actual Amounts for Year Ended June 30, 2019)

	2020 Budget	2020 Actual	Variance - Positive (Negative)	2019 Actual
Revenues:				
Intergovernmental:				
Gasoline tax $2.35	$ 1,080,737	$ 972,480	$ (108,257)	$ 1,047,520
Gasoline tax $1.25	620,707	560,862	(59,845)	603,047
Gasoline tax $1.75	49,452	50,546	1,094	49,190
Optional $0.01 tax	23,977	24,516	539	23,804
National forest	-	14,947	14,947	15,140
Total intergovernmental	1,774,873	1,623,351	(151,522)	1,738,701
Miscellaneous:				
Investment income	800	17,464	16,664	10,080
Other	15,000	-	(15,000)	-
Total miscellaneous	15,800	17,464	1,664	10,080
Total revenues	1,790,673	1,640,815	(149,858)	1,748,781
Expenditures:				
Current:				
Public works:				
Highways and streets:				
Salaries and wages	725,209	660,308	64,901	625,336
Employee benefits	330,198	294,415	35,783	271,964
Services and supplies	801,700	660,597	141,103	513,047
Capital outlay	325,000	-	325,000	-
Total expenditures	2,182,107	1,615,320	566,787	1,410,347
Excess (deficiency) of revenues over expenditures	(391,434)	25,495	416,929	338,434
Other financing sources (uses):				
Operating transfers out	(100,000)	(100,000)	-	(100,000)
Sale of capital assets	-	1,000	1,000	-
Total other financing sources	(100,000)	(99,000)	1,000	(100,000)
Net change in fund balance	(491,434)	(73,505)	417,929	238,434
Fund balance:				
Beginning of year	494,829	875,274	380,445	636,840
End of year	$ 3,395	$ 801,769	$ 798,374	$ 875,274

LINCOLN COUNTY, NEVADA
MAJOR FUND - LINCOLN COUNTY WATER DISTRICT
WATER RESOURCES SPECIAL REVENUE FUND
COMPARATIVE BALANCE SHEETS
June 30, 2020 and 2019

	2020	2019
ASSETS		
Pooled cash and investments	$ 2,768,999	$ 2,828,036
Interest receivable	12,183	13,174
Total assets	$ 2,781,182	$ 2,841,210
LIABILITIES		
Accounts payable	$ -	$ -
FUND BALANCE		
Committed	2,781,182	2,841,210
Total liabilities and fund balance	$ 2,781,182	$ 2,841,210

LINCOLN COUNTY, NEVADA
MAJOR FUND - LINCOLN COUNTY WATER DISTRICT
WATER RESOURCES SPECIAL REVENUE FUND
SCHEDULE OF REVENUES, EXPENDITURES, AND CHANGES IN FUND BALANCE - BUDGET (GAAP BASIS) AND ACTUAL
Year Ended June 30, 2020
(With Comparative Actual Amounts for Year Ended June 30, 2019)

	2020 Budget	2020 Actual	Variance - Positive (Negative)	2019 Actual
Revenues:				
Miscellaneous:				
Investment income	$ 500	$ 139,972	$ 139,472	$ 107,795
Expenditures:				
Current:				
General government:				
Services and supplies	1,356,441	-	1,356,441	-
Excess (deficiency) of revenues over expenditures	(1,355,941)	139,972	1,495,913	107,795
Other financing sources (uses):				
Operating transfers out	-	(200,000)	(200,000)	-
Net change in fund balance	(1,355,941)	(60,028)	1,295,913	107,795
Fund balance:				
Beginning of year	1,355,941	2,841,210	1,485,269	2,733,415
End of year	$ -	$ 2,781,182	$ 2,781,182	$ 2,841,210

LINCOLN COUNTY, NEVADA
MAJOR FUND - LINCOLN COUNTY LAND ACT - SPECIAL USE SPECIAL REVENUE FUND
COMPARATIVE BALANCE SHEETS
June 30, 2020 and 2019

	2020	2019
ASSETS		
Pooled cash and investments	$ 2,997,926	$ 3,671,992
Interest receivable	5,718	8,055
Interfund receivable	600,921	180,000
Total assets	$ 3,604,565	$ 3,860,047
LIABILITIES		
Accrued payroll and benefits	$ 186,817	$ -
FUND BALANCE		
Committed	3,417,748	3,860,047
Total liabilities and fund balance	$ 3,604,565	$ 3,860,047

LINCOLN COUNTY, NEVADA
MAJOR FUND - LINCOLN COUNTY LAND ACT - SPECIAL USE SPECIAL REVENUE FUND
SCHEDULE OF REVENUES, EXPENDITURES, AND CHANGES
IN FUND BALANCE - BUDGET (GAAP BASIS) AND ACTUAL
Year Ended June 30, 2020
(With Comparative Actual Amounts for Year Ended June 30, 2019)

	2020 Budget	2020 Actual	Variance - Positive (Negative)	2019 Actual
Revenues:				
Intergovernmental:				
Grant	$ -	$ 10,871	$ 10,871	$ -
Miscellaneous:				
Investment income	6,000	93,521	87,521	71,047
Loan interest income	-	7,189	7,189	-
Rent	30,000	30,276	276	30,276
Total miscellaneous	36,000	130,986	94,986	101,323
Total revenues	36,000	141,857	105,857	101,323
Expenditures:				
Current:				
General government:				
Salaries and wages	-	179,116	(179,116)	-
Employee benefits	-	7,701	(7,701)	-
Service and supplies	235,625	397,490	(161,865)	-
Capital outlay	550,000	-	550,000	-
Total general government	785,625	584,307	201,318	-
Excess (deficiency) of revenues over expenditures	(749,625)	(442,450)	307,175	101,323
Other financing sources (uses):				
Operating transfers in	151	151	-	-
Net change in fund balance	(749,474)	(442,299)	307,175	101,323
Fund balance:				
Beginning of year	3,544,724	3,860,047	315,323	$ 3,758,724
End of year	$ 2,795,250	$ 3,417,748	$ 622,498	$ 3,860,047

LINCOLN COUNTY, NEVADA
MAJOR FUND - COUNTY GRANT SPECIAL REVENUE FUND
COMPARATIVE BALANCE SHEETS
June 30, 2020 and 2019

	2020	2019
ASSETS		
Pooled cash and investments	$ 47,488	$ 46,967
Interest receivable	159	114
Due from other governments	368,298	257,043
Total assets	$ 415,945	$ 304,124
LIABILITIES		
Accounts payable	$ 95,871	$ 56,857
Accrued payroll and benefits	19,422	14,643
Unearned revenue	120,912	168,479
Total liabilities	236,205	239,979
DEFERRED INFLOWS OF RESOURCES		
Unavailable revenue - grant revenue	121,506	-
FUND BALANCE		
Committed	58,234	64,145
Total liabilities and fund balance	$ 415,945	$ 304,124

LINCOLN COUNTY, NEVADA
MAJOR FUND - COUNTY GRANT SPECIAL REVENUE FUND
SCHEDULE OF REVENUES, EXPENDITURES, AND CHANGES IN FUND BALANCE - BUDGET (GAAP BASIS) AND ACTUAL
Year Ended June 30, 2020
(With Comparative Actual Amounts for Year Ended June 30, 2019)

	2020 Budget	2020 Actual	Variance - Positive (Negative)	2019 Actual
Revenues:				
Intergovernmental:				
Grants	$ 1,211,423	$ 915,171	$ (296,252)	$ 1,119,155
Miscellaneous:				
Investment income	-	1,321	1,321	1,003
Total revenues	1,211,423	916,492	(294,931)	1,120,158
Expenditures:				
Current:				
General government	506,815	335,427	171,388	340,665
Public safety	255,018	234,932	20,086	190,166
Public works	127,237	125,206	2,031	468,671
Welfare	137,188	106,227	30,961	111,335
Culture and recreation	185,165	174,446	10,719	17,292
Total expenditures	1,211,423	976,238	235,185	1,128,129
Excess (deficiency) of revenues over expenditures	-	(59,746)	(59,746)	(7,971)
Other financing sources (uses):				
Operating transfers in	-	53,835	53,835	8,974
Net change in fund balance	-	(5,911)	(5,911)	1,003
Fund balance:				
Beginning of year	63,142	64,145	1,003	63,142
End of year	$ 63,142	$ 58,234	$ (4,908)	$ 64,145

MAJOR ENTERPRISE FUNDS

Enterprise Funds are used to account for operations that are financed and operated in a manner similar to private business enterprises–where the intent of the County's management is that the costs of providing goods or services be financed or recovered primarily through user charges.

The Detention Center Fund is used to account for revenues and expenses of the Detention Center operations. The County provides inmate beds to other local governments at a daily fee per bed as well as beds for Lincoln County inmates.

Solid Waste Fund is used to account for revenues and expenses of the garbage disposal services throughout the County.

LINCOLN COUNTY, NEVADA
MAJOR FUND - DETENTION CENTER ENTERPRISE FUND (064)
STATEMENT OF NET POSITION
June 30, 2020 and 2019

	2020	2019
ASSETS		
Current assets:		
Pooled cash and investments	$ 59,969	$ 134,754
Accounts receivable	148,575	160,804
Total current assets	208,544	295,558
Capital assets:		
Property, plant and equipment (net of depreciation)	787,218	831,505
Total assets	995,762	1,127,063
DEFERRED OUTFLOWS OF RESOURCES		
Deferred pension charge	399,544	419,985
LIABILITIES		
Current liabilities:		
Accounts payable	11,194	21,865
Accrued payroll and benefits	212,007	131,636
Accrued compensated absences	77,624	111,415
Total current liabilities	300,825	264,916
Non-current liabilities:		
Accrued compensated absences	56,210	65,250
Net pension liability	3,126,874	3,247,750
Total non-current liabilities	3,183,084	3,313,000
Total liabilities	3,483,909	3,577,916
DEFERRED INFLOWS OF RESOURCES		
Deferred pension charge	414,682	278,397
NET POSITION		
Invested in capital assets, net of related debt	787,218	831,505
Unrestricted	(3,290,503)	(3,140,770)
Total net position	$ (2,503,285)	$ (2,309,265)

LINCOLN COUNTY, NEVADA
MAJOR FUND - DETENTION CENTER ENTERPRISE FUND (064)
SCHEDULE OF REVENUES, EXPENSES, AND CHANGES IN NET POSITION - BUDGET (GAAP BASIS) AND ACTUAL
Year Ended June 30, 2020
(With Comparative Actual Amounts for Year Ended June 30, 2019)

	2020 Budget	2020 Actual	Variance - Positive (Negative)	2019 Actual
Revenues:				
Charges for services:				
Inmate fees	$ 1,916,250	$ 1,873,065	$ (43,185)	$ 1,867,300
Operating expenses:				
Public safety:				
Salaries and wages	1,049,527	1,121,479	(71,952)	980,005
Employee benefits	612,055	642,605	(30,550)	508,390
Services and supplies	361,200	318,714	42,486	380,597
Depreciation	65,000	44,287	20,713	45,308
Total operating expenses	2,087,782	2,127,085	(39,303)	1,914,300
Operating income (loss)	(171,532)	(254,020)	(82,488)	(47,000)
Non-operating revenues (expenses):				
Operating transfers in	60,000	60,000	-	97,500
Changes in net position	$ (111,532)	(194,020)	$ (82,488)	50,500
Net position:				
Beginning of year		(2,309,265)		(2,359,765)
End of year		$ (2,503,285)		$ (2,309,265)

LINCOLN COUNTY, NEVADA
MAJOR FUND - DETENTION CENTER ENTERPRISE FUND
COMPARATIVE STATEMENT OF CASH FLOWS
June 30, 2020 and 2019

	2020	2019
Cash flows from operating activities:		
Cash received from customers	$ 1,885,294	$ 2,025,172
Cash paid for services and supplies	(329,385)	(384,273)
Cash paid for salaries and benefits	(1,690,694)	(1,514,110)
Net cash provided (used) by operating activities	(134,785)	126,789
Cash flows from noncapital financing activities:		
Due to other funds	-	(89,535)
Operating transfers in	60,000	97,500
Net cash provided (used) by noncapital financing activities	60,000	7,965
Net change in cash and cash equivalents	(74,785)	134,754
Cash:		
Beginning of year	134,754	-
End of year	$ 59,969	$ 134,754
Reconciliation of operating income (loss) to net cash provided (used) by operating activities:		
Operating income (loss)	$ (254,020)	$ (47,000)
Adjustments to reconcile operating income (loss) to net cash provided (used) by operating activities:		
Depreciation expense	44,287	45,308
(Increase) decrease in accounts receivables	12,229	157,872
Increase (decrease) in accounts payable	(10,671)	(3,676)
Increase (decrease) in accrued payroll and benefits	80,371	7,825
Increase (decrease) in compensated absences	(42,831)	(16,089)
Increase (decrease) in net pension liability	(120,876)	11,411
Increase (decrease) in net pension expense	156,726	(28,862)
Total adjustments	119,235	173,789
Net cash provided (used) by operating activities	$ (134,785)	$ 126,789

LINCOLN COUNTY, NEVADA
MAJOR SOLID WASTE ENTERPRISE FUND
STATEMENT OF NET POSITION
June 30, 2020

	2020	2019
ASSETS		
Current assets:		
Pooled cash and investments	$ 640,194	$ 559,621
Accounts receivable	131,219	142,054
Interest receivable	133	133
Restricted assets:		
Pooled cash and investments	83,287	61,118
Capital assets:		
Land	200,000	200,000
Property and equipment (net of depreciation)	771,259	388,088
Total assets	1,826,092	1,351,014
DEFERRED OUTFLOWS OF RESOURCES		
Deferred pension charge	20,066	42,641
LIABILITIES		
Current liabilities:		
Accounts payable	7,525	10,560
Accrued payroll and benefits	17,898	15,845
Accrued compensated absences	8,702	8,445
Interfund payable	83,802	20,000
Accrued interest payable	8,174	-
Total current liabilities	126,101	54,850
Non-current liabilities:		
Landfill closure and postclosure costs	80,000	60,000
Interfund payable	687,119	340,000
Accrued compensated absences	5,801	5,697
Net pension liability	-	-
Total non-current liabilities	772,920	405,697
Total liabilities	899,021	460,547
DEFERRED INFLOWS OF RESOURCES		
Deferred pension charge	3,749	27,654
NET POSITION		
Invested in capital assets, net of related debt	971,259	588,088
Unrestricted	(27,871)	317,366
Total net position	$ 943,388	$ 905,454

LINCOLN COUNTY, NEVADA
MAJOR SOLID WASTE ENTERPRISE FUND
SCHEDULE OF REVENUES, EXPENSES, AND CHANGES IN NET POSITION -
BUDGET (GAAP BASIS) AND ACTUAL
Year Ended June 30, 2020
(With Comparative Actual Amounts for Year Ended June 30, 2019)

	2020		Variance-Positive	2019
	Budget	Actual	(Negative)	Actual
Operating revenues:				
Charges for services	$ 487,000	$ 610,739	$ 123,739	$ 638,124
Operating expenses:				
Sanitation:				
Salaries and wages	243,849	241,228	2,621	231,487
Employee benefits	98,028	95,898	2,130	82,873
Service and supplies	220,500	109,723	110,777	131,808
Closure and postclosure landfill costs	20,000	20,000	-	20,000
Depreciation	60,000	92,762	(32,762)	45,169
Total operating expenses	642,377	559,611	82,766	511,337
Operating income (loss)	(155,377)	51,128	206,505	126,787
Non-operating revenues (expenses):				
Investment income	(8,220)	2,169	10,389	1,174
Interest expense	-	(15,363)	(15,363)	-
Total non-operating revenues (expenses)	(8,220)	(13,194)	(4,974)	1,174
Change in net position	$ (163,597)	37,934	$ 201,531	127,961
Net Position:				
Beginning of year		905,454		777,493
End of year		$ 943,388		$ 905,454

LINCOLN COUNTY, NEVADA
MAJOR SOLID WASTE ENTERPRISE FUND
STATEMENT OF CASH FLOWS
Year Ended June 30, 2020

	2020	2019
Cash flows from operating activities:		
Cash received from customers	$ 621,574	$ 640,760
Cash paid for services and supplies	(112,758)	(138,645)
Cash paid for salaries and benefits	(336,042)	(321,206)
Net cash provided (used) by operating activities	172,774	180,909
Cash flows from capital and related financing activities:		
Purchases of capital assets	(475,933)	(28,149)
Interfund payable	410,921	(20,000)
Interest paid	(7,189)	-
Net cash provided by investing activities	(72,201)	(48,149)
Cash flows from investing activities:		
Investment income	2,169	1,113
Net change in cash and cash equivalents	102,742	133,873
Cash:		
Beginning of year	620,739	486,866
End of year	$ 723,481	$ 620,739
Reconciliation of operating income to net cash provided (used) by operating activities:		
Operating income (loss)	$ 51,128	$ 126,787
Adjustments to reconcile operating income to net cash provided (used) by operating activities:		
Depreciation expense	92,762	45,169
(Increase) decrease in accounts receivable	10,835	2,636
Increase (decrease) in accounts payable	(3,035)	(6,837)
Increase (decrease) in accrued payroll and benefits	2,053	435
Increase (decrease) in compensated absences	361	(4,911)
Increase (decrease) in land fill closure	20,000	20,000
Increase (decrease) in net pension liability	-	(472)
Increase (decrease) in net pension expense	(1,330)	(1,898)
Total adjustments	121,646	54,122
Net cash provided (used) by operating activities	$ 172,774	$ 180,909

NONMAJOR SPECIAL REVENUE FUNDS

Special Revenue Funds are used to account for specific revenues that are legally restricted to expenditures for particular purposes.

The Pioche Town, Alamo Town, and Panaca Town Funds are used to account for the activities related to these unincorporated towns.

The Federal in Lieu Tax Fund is used to account for taxes received in lieu of property tax from the Federal Government for property owned by the Federal Government located in the County.

The Resource Development Fund is used to account for grant revenues utilized for economic development.

The Library Funds are used to account for the library services in the County.

The Museum Fund is used to account for operations of the County museum in Pioche, Nevada.

The Senior Nutrition Fund is used to account for federal monies, meal income, and related expenditures incurred to provide meals to senior citizens.

The Transportation Fund is used to account for revenues and expenditures of the senior bus service offered to County residents.

The Agricultural Extension Fund is used to account for services of the state agricultural extension agent.

The Indigent and Medical Indigent Funds are used to account for revenues and expenditures for assistance given to indigents in the County.

The China Springs Fund is used to account for revenues and expenditures pursuant to NRS 62B.150.

The Ambulance Fund is used to account for revenues and expenditures of the ambulance service in Pioche and Meadow Valley.

The Regional Streets and Highways Fund is used for gas taxes collected to be spent on roads.

The Room Tax Fund is used to account for room taxes collected to be spent on the promotion of tourism for the County.

The Legal Aid Fund is used to account for expenditures for senior citizens who cannot afford legal fees.

The Forensic Services fund accounts for fees collected from certain accused criminals for the specific use of forensic lab work performed for Justice Court pursuant to NRS 176.

The Administrative Assessment Fund is used to account for monies used to enhance the justice system.

The Forfeitures Fund is used to account for revenues and expenditures created by the confiscation of assets in the process of enforcing drug laws.

The Recorder Technology Fund is used to account for fees collected and used to enhance the records maintenance in the County Recorder's office.

The L.C. Housing Authority Fund is used to account for low-income housing in Lincoln County.

The Alamo Clinic Fund is used to account for revenues and expenditures in providing medical support in the Alamo area.

The Fair Board Fund is used to account for revenues and expenditures of the fairground.

The Multi-Species Habitat and Multi-Species Habitat Section 7 Funds are used to minimize, monitor, and mitigate the effects of the disruption and taking of habitats of endangered species within Lincoln County.

The Youth Activities Counsel Fund is used to account for funds for youth community support.

The Genetic Marker Testing Fund is used to account for revenues and expenditures related to genetic marker analysis.

The Public Improvement Fund is used to account for revenues and expenditures for the improvement of County properties.

The Airport Fund is used to account for revenues and expenditures for airport operations.

The Panaca Town Building Fund is used to account for revenues and expenditures of the Town.

The Court Facility Fees and District Court Specialty Court Funds are used to account for revenues and expenditures of the court.

The Tri County Weed Control Fund is used to account for revenues and expenditures of Nye, Lincoln, and White Pine Counties' weed control activities.

The Lincoln County Land Act Funds are used to account for revenues received from land sales which are to be spent according to resolution specifications.

The Lincoln County Water Funds are used to account for revenues received for the County's portion of water sales which are to be spent according to resolution specifications.

The Lincoln County Water District Funds are used to account for revenues received from water sales which are to be spent according to resolution specifications. The Lincoln County Water District is a blended component unit of the government.

The Assessor Technology Fund is used to account for fees collected and used to enhance records maintenance in the County Assessor's office.

The District Court Technology Fund is used to account for fees collected and used to enhance records maintenance in the Court's office.

The Court Security Fund is used to account for fees collected and used to enhance security in the Court's office.

The District Court Enrichment Fund is used to account for fees collected and used to enrich the Court's office.

The Demerit Point Reduction Fund is used to account for fees to reduce points from traffic citations and used to fund specialty court programs or pay for court IT upgrades.

The Property Management Fund is used to account for the maintenance activities of real estate of the County that is rented for public use.

LINCOLN COUNTY, NEVADA
NONMAJOR SPECIAL REVENUE FUNDS
COMBINING BALANCE SHEET
June 30, 2020
(With Comparative Totals for June 30, 2019)

	Pioche Town	Alamo Town	Panaca Town	Federal In Lieu Tax	Resource Development Authority	County Library	Museum	Senior Nutrition	Transportation	Agricultural Extension	Indigent	Medical Indigent
ASSETS												
Pooled cash and investments	$ 230,074	$ 87,821	$ 21,212	$ 2,044,054	$ 85,249	$ 69,766	$ 86,180	$ 101,505	$ 200,082	$ 28,053	$ 364,791	$ 517,096
Interest receivable	354	153	35	6,699	-	-	-	-	-	-	-	817
Taxes receivable	1,493	1,128	394	-	-	1,298	659	1,596	-	311	1,117	2,491
Due from other governments	10,714	4,449	8,050	10,309	-	-	-	15,257	9,825	-	-	-
Due from others	-	-	-	-	-	-	-	-	-	-	-	-
Inventory	-	-	-	-	-	-	-	-	-	-	-	-
Prepaid expense	-	-	-	-	-	-	-	-	-	-	-	-
Interfund receivable	-	-	-	-	-	-	-	-	-	-	-	-
Total assets	$ 242,635	$ 93,551	$ 29,691	$ 2,061,062	$ 85,249	$ 71,064	$ 86,839	$ 118,358	$ 209,907	$ 28,364	$ 365,908	$ 520,404
LIABILITIES												
Accounts payable	$ 2,969	$ 6,365	$ 2,608	$ 27,155	$ 2,659	$ 1,277	$ 785	$ 9,828	$ 956	$ 1,810	$ 11,442	$ 79,986
Accrued payroll and benefits	2,902	347	123	-	-	3,665	1,431	6,331	4,567	602	3,496	-
Unearned revenue	-	-	-	-	82,590	-	-	-	-	-	-	-
Total liabilities	5,871	6,712	2,731	27,155	85,249	4,942	2,216	16,159	5,523	2,412	14,938	79,986
DEFERRED INFLOWS OF RESOURCES												
Unavailable revenue - property taxes	1,493	1,001	375	-	-	1,132	575	1,394	-	272	977	2,177
FUND BALANCE												
Nonspendable	-	-	-	-	-	-	-	-	-	-	-	-
Restricted for:												
Unincorporated towns	235,271	85,838	26,585	-	-	-	-	-	-	-	-	-
Multi-species conservation	-	-	-	-	-	-	-	-	-	-	-	-
General government	-	-	-	-	-	-	-	-	-	-	-	-
Public safety	-	-	-	-	-	-	-	-	-	-	-	-
Judicial	-	-	-	-	-	-	-	-	-	-	-	-
Public works	-	-	-	-	-	-	-	-	-	-	-	-
Health	-	-	-	-	-	-	-	-	-	-	-	-
Welfare	-	-	-	-	-	-	-	100,805	-	-	349,993	438,241
Culture and recreation	-	-	-	-	-	64,990	84,048	-	-	-	-	-
Community support	-	-	-	-	-	-	-	-	204,384	25,680	-	-
Intergovernmental	-	-	-	-	-	-	-	-	-	-	-	-
Committed for:												
Land act	-	-	-	-	-	-	-	-	-	-	-	-
Water	-	-	-	-	-	-	-	-	-	-	-	-
Lincoln County Water District	-	-	-	-	-	-	-	-	-	-	-	-
General government	-	-	-	2,033,907	-	-	-	-	-	-	-	-
Public works	-	-	-	-	-	-	-	-	-	-	-	-
Health	-	-	-	-	-	-	-	-	-	-	-	-
Unassigned	-	-	-	-	-	-	-	-	-	-	-	-
Total fund balance	235,271	85,838	26,585	2,033,907	-	64,990	84,048	100,805	204,384	25,680	349,993	438,241
Total liabilities, deferred inflows of resources, and fund balance	$ 242,635	$ 93,551	$ 29,691	$ 2,061,062	$ 85,249	$ 71,064	$ 86,839	$ 118,358	$ 209,907	$ 28,364	$ 365,908	$ 520,404

LINCOLN COUNTY, NEVADA
NONMAJOR SPECIAL REVENUE FUNDS
COMBINING BALANCE SHEET
June 30, 2020
(With Comparative Totals for June 30, 2019)

	China Springs	Ambulance	Regional Streets and Highways	Room Tax	Legal Aid Services	Forensic Services	Administrative Assessment	Forfeiture	Recorder Technology	L. C. Housing Authority
ASSETS										
Pooled cash and investments	$ 3,579	$ 29,170	$ 755,110	$ 98,711	$ (3,195)	$ 5,751	$ 111,115	$ 48,619	$ 32,586	$ 23,371
Interest receivable	-	56	2,957	-	-	-	183	65	50	36
Taxes receivable	131	-	-	7,746	-	-	-	-	-	-
Due from other governments	-	-	23,860	-	-	-	-	-	-	-
Due from others	-	10,230	-	-	-	-	-	-	-	-
Inventory	-	-	-	-	-	-	-	-	-	-
Prepaid expense	-	-	-	-	-	-	-	-	-	-
Interfund receivable	-	-	-	-	-	-	-	-	-	-
Total assets	$ 3,710	$ 39,456	$ 781,927	$ 106,457	$ (3,195)	$ 5,751	$ 111,298	$ 48,684	$ 32,636	$ 23,407
LIABILITIES										
Accounts payable	$ -	$ 3,672	$ 235	$ 10,895	$ -	$ 577	$ 972	$ 2,568	$ -	$ 1,055
Accrued payroll and benefits	-	2,213	-	370	-	-	-	-	-	148
Unearned revenue	-	-	-	-	-	-	-	-	-	-
Total liabilities	-	5,885	235	11,265	-	577	972	2,568	-	1,203
DEFERRED INFLOWS OF RESOURCES										
Unavailable revenue - property taxes	113	-	-	-	-	-	-	-	-	-
FUND BALANCE										
Nonspendable	-	-	-	-	-	-	-	-	-	-
Restricted for:										
Unincorporated towns	-	-	-	-	-	-	-	-	-	-
Multi-species conservation	-	-	-	-	-	-	-	-	-	-
General government	-	-	-	-	-	-	-	-	32,636	-
Public safety	-	-	-	-	-	5,174	-	46,116	-	-
Judicial	-	-	-	-	-	-	110,326	-	-	-
Public works	-	-	781,692	-	-	-	-	-	-	-
Health	-	-	-	-	-	-	-	-	-	-
Welfare	-	-	-	-	-	-	-	-	-	-
Culture and recreation	-	-	-	95,192	-	-	-	-	-	-
Community support	-	-	-	-	-	-	-	-	-	22,204
Intergovernmental	3,597	-	-	-	-	-	-	-	-	-
Committed for:										
Land act	-	-	-	-	-	-	-	-	-	-
Water	-	-	-	-	-	-	-	-	-	-
Lincoln County Water District	-	-	-	-	-	-	-	-	-	-
General government	-	-	-	-	-	-	-	-	-	-
Public works	-	-	-	-	-	-	-	-	-	-
Health	-	33,571	-	-	-	-	-	-	-	-
Unassigned	-	-	-	-	(3,195)	-	-	-	-	-
Total fund balance	3,597	33,571	781,692	95,192	(3,195)	5,174	110,326	46,116	32,636	22,204
Total liabilities, deferred inflows of resources, and fund balance	$ 3,710	$ 39,456	$ 781,927	$ 106,457	$ (3,195)	$ 5,751	$ 111,298	$ 48,684	$ 32,636	$ 23,407

LINCOLN COUNTY, NEVADA
NONMAJOR SPECIAL REVENUE FUNDS
COMBINING BALANCE SHEET
June 30, 2020
(With Comparative Totals for June 30, 2019)

	Alamo Clinic	Fair Board	Multi-Species Habitat Conservation	Multi-Species Habitat Conservation Section 7	Youth Activities Counsel	Genetic Marker Testing	Public Improvement	Airport	Panaca Town Building	Court Facility Fees	Tri County Weed Control
ASSETS											
Pooled cash and investments	$ 378	$ 24,186	$ 13,837	$ 902,339	$ 6,007	$ 1,370	$ 149,107	$ 23,165	$ 57,520	$ 135,935	$ -
Interest receivable	-	23	24	1,461	-	-	241	-	89	224	-
Taxes receivable	1,321	-	-	-	-	-	-	-	-	-	-
Due from other governments	-	-	-	-	-	-	-	-	-	-	-
Due from others	-	-	-	-	-	-	-	9,898	-	-	-
Inventory	-	-	-	-	-	-	-	8,091	-	-	-
Prepaid expense	-	-	-	-	-	-	-	-	-	-	-
Interfund receivable	-	-	-	-	-	-	-	-	-	-	-
Total assets	$ 1,699	$ 24,209	$ 13,861	$ 903,800	$ 6,007	$ 1,370	$ 149,348	$ 41,154	$ 57,609	$ 136,159	$ -
LIABILITIES											
Accounts payable	$ 378	$ 488	$ 621	$ -	$ -	$ 1,370	$ -	$ 9,608	$ -	$ 45,191	$ -
Accrued payroll and benefits	-	-	-	-	-	-	-	73	-	-	-
Unearned revenue	-	-	13,240	-	-	-	-	-	-	-	-
Total liabilities	378	488	13,861	-	-	1,370	-	9,681	-	45,191	-
DEFERRED INFLOWS OF RESOURCES											
Unavailable revenue - property taxes	1,154	-	-	-	-	-	-	-	-	-	-
FUND BALANCE											
Nonspendable	-	-	-	-	-	-	-	8,091	-	-	-
Restricted for:											
Unincorporated towns	-	-	-	-	-	-	-	-	-	-	-
Multi-species conservation	-	-	-	903,800	-	-	-	-	-	-	-
General government	-	-	-	-	-	-	-	-	-	-	-
Public safety	-	-	-	-	-	-	-	-	-	-	-
Judicial	-	-	-	-	-	-	-	-	-	90,968	-
Public works	-	-	-	-	-	-	149,348	-	-	-	-
Health	167	-	-	-	-	-	-	-	-	-	-
Welfare	-	-	-	-	-	-	-	-	-	-	-
Culture and recreation	-	23,721	-	-	-	-	-	-	-	-	-
Community support	-	-	-	-	6,007	-	-	-	-	-	-
Intergovernmental	-	-	-	-	-	-	-	-	-	-	-
Committed for:											
Land act	-	-	-	-	-	-	-	-	-	-	-
Water	-	-	-	-	-	-	-	-	-	-	-
Lincoln County Water District	-	-	-	-	-	-	-	-	-	-	-
General government	-	-	-	-	-	-	-	-	57,609	-	-
Public works	-	-	-	-	-	-	-	23,382	-	-	-
Health	-	-	-	-	-	-	-	-	-	-	-
Unassigned	-	-	-	-	-	-	-	-	-	-	-
Total fund balance	167	23,721	-	903,800	6,007	-	149,348	31,473	57,609	90,968	-
Total liabilities, deferred inflows of resources, and fund balance	$ 1,699	$ 24,209	$ 13,861	$ 903,800	$ 6,007	$ 1,370	$ 149,348	$ 41,154	$ 57,609	$ 136,159	$ -

LINCOLN COUNTY, NEVADA
NONMAJOR SPECIAL REVENUE FUNDS
COMBINING BALANCE SHEET
June 30, 2020
(With Comparative Totals for June 30, 2019)

	Lincoln County Land Act General	Lincoln County Land Act Planning and Development	Lincoln County Land Act Education	Lincoln County Land Act Grant Match	Lincoln County Water General	Lincoln County Water Special Projects	Lincoln County Water Planning and Development	Lincoln County Water Special Use	Lincoln County Water Grant Match	Lincoln County Water District General	Lincoln County Water District Plan & Dev
ASSETS											
Pooled cash and investments	$ 6,879	$ 700	$ 130,510	$ -	$ 633	$ 8,783	$ 87,123	$ 1,239,861	$ 87,057	$ 326,139	$ 948,216
Interest receivable	11	1	211	-	1	14	141	2,006	141	1,067	3,920
Taxes receivable	-	-	-	-	-	-	-	-	-	-	-
Due from other governments	-	-	-	-	-	-	-	-	-	-	-
Due from others	-	-	-	-	-	-	-	-	-	-	-
Inventory	-	-	-	-	-	-	-	-	-	-	-
Prepaid expense	-	-	-	-	-	-	-	-	-	1,554	-
Interfund receivable	-	-	-	-	-	-	-	170,000	-	-	-
Total assets	$ 6,890	$ 701	$ 130,721	$ -	$ 634	$ 8,797	$ 87,264	$ 1,411,867	$ 87,198	$ 328,760	$ 952,136
LIABILITIES											
Accounts payable	$ -	$ -	$ -	$ -	$ -	$ -	$ -	$ -	$ -	$ 5,361	$ -
Accrued payroll and benefits	-	-	-	-	-	-	-	-	-	6,766	-
Unearned revenue	-	-	-	-	-	-	-	-	-	-	-
Total liabilities	-	-	-	-	-	-	-	-	-	12,127	-
DEFERRED INFLOWS OF RESOURCES											
Unavailable revenue - property taxes	-	-	-	-	-	-	-	-	-	-	-
FUND BALANCE											
Nonspendable	-	-	-	-	-	-	-	-	-	-	-
Restricted for:											
Unincorporated towns	-	-	-	-	-	-	-	-	-	-	-
Multi-species conservation	-	-	-	-	-	-	-	-	-	-	-
General government	-	-	-	-	-	-	-	-	-	-	-
Public safety	-	-	-	-	-	-	-	-	-	-	-
Judicial	-	-	-	-	-	-	-	-	-	-	-
Public works	-	-	-	-	-	-	-	-	-	-	-
Health	-	-	-	-	-	-	-	-	-	-	-
Welfare	-	-	-	-	-	-	-	-	-	-	-
Culture and recreation	-	-	-	-	-	-	-	-	-	-	-
Community support	-	-	-	-	-	-	-	-	-	-	-
Intergovernmental	-	-	-	-	-	-	-	-	-		
Committed for:											
Land act	6,890	701	130,721	-	-	-	-	-	-	-	-
Water	-	-	-	-	634	8,797	87,264	1,411,867	87,198	316,633	952,136
Lincoln County Water District	-	-	-	-	-	-	-	-	-	-	-
General government	-	-	-	-	-	-	-	-	-	-	-
Public works	-	-	-	-	-	-	-	-	-	-	-
Health	-	-	-	-	-	-	-	-	-	-	-
Unassigned	-	-	-	-	-	-	-	-	-	-	-
Total fund balance	6,890	701	130,721	-	634	8,797	87,264	1,411,867	87,198	316,633	952,136
Total liabilities, deferred inflows of resources, and fund balance	$ 6,890	$ 701	$ 130,721	$ -	$ 634	$ 8,797	$ 87,264	$ 1,411,867	$ 87,198	$ 328,760	$ 952,136

LINCOLN COUNTY, NEVADA
NONMAJOR SPECIAL REVENUE FUNDS
COMBINING BALANCE SHEET
June 30, 2020
(With Comparative Totals for June 30, 2019)

	Lincoln County Water District Special Proj.	Assessor Technology	District Court Technology	District Court Specialty Court	Court Security	District Court Enrichment	Demerit Point Reduction	Property Management	Totals 2020	Totals 2019
ASSETS										
Pooled cash and investments	$ 698,566	$ 38,983	$ 5,120	$ 9,902	$ 12,436	$ 57,383	$ 1,837	$ 81,586	$ 9,996,258	$ 9,734,251
Interest receivable	2,813	-	-	-	20	91	-	-	23,904	22,403
Taxes receivable	-	-	-	-	-	-	-	-	19,685	21,286
Due from other governments	-	-	-	-	-	-	-	-	82,464	89,160
Due from others	-	-	-	-	-	-	-	-	20,128	-
Inventory	-	-	-	-	-	-	-	-	8,091	-
Prepaid expense	32,000	-	-	-	-	-	-	-	33,554	40,000
Interfund receivable	-	-	-	-	-	-	-	-	170,000	180,000
Total assets	$ 733,379	$ 38,983	$ 5,120	$ 9,902	$ 12,456	$ 57,474	$ 1,837	$ 81,586	$ 10,354,084	$ 10,087,100
LIABILITIES										
Accounts payable	$ -	$ -	$ -	$ 1,177	$ -	$ -	$ -	$ 5,787	$ 237,795	$ 214,573
Accrued payroll and benefits	-	-	-	-	-	-	-	371	33,405	55,090
Unearned revenue	-	-	-	-	-	-	-	-	95,830	94,601
Total liabilities	-	-	-	1,177	-	-	-	6,158	367,030	364,264
DEFERRED INFLOWS OF RESOURCES										
Unavailable revenue - property taxes	-	-	-	-	-	-	-	-	10,663	9,783
FUND BALANCE										
Nonspendable	32,000	-	-	-	-	-	-	-	40,091	40,000
Restricted for:										
Unincorporated towns	-	-	-	-	-	-	-	-	347,694	280,019
Multi-species conservation	-	-	-	-	-	-	-	-	903,800	879,908
General government	-	38,983	-	-	-	-	-	-	71,619	230,811
Public safety	-	-	-	-	-	-	-	-	51,290	59,838
Judicial	-	-	5,120	8,725	12,456	57,474	1,837	-	286,906	289,494
Public works	-	-	-	-	-	-	-	-	931,040	815,674
Health	-	-	-	-	-	-	-	-	167	496
Welfare	-	-	-	-	-	-	-	-	889,039	814,730
Culture and recreation	-	-	-	-	-	-	-	-	267,951	244,626
Community support	-	-	-	-	-	-	-	-	258,275	228,857
Intergovernmental	-	-	-	-	-	-	-	-	3,597	1,454
Committed for:										
Land act	-	-	-	-	-	-	-	-	138,312	134,807
Water	-	-	-	-	-	-	-	-	2,864,529	2,746,544
Lincoln County Water District	701,379	-	-	-	-	-	-	-	701,379	668,869
General government	-	-	-	-	-	-	-	75,428	2,166,944	2,252,929
Public works	-	-	-	-	-	-	-	-	23,382	522
Health	-	-	-	-	-	-	-	-	33,571	23,668
Unassigned	-	-	-	-	-	-	-	-	(3,195)	(193)
Total fund balance	733,379	38,983	5,120	8,725	12,456	57,474	1,837	75,428	9,976,391	9,713,053
Total liabilities, deferred inflows of resources, and fund balance	$ 733,379	$ 38,983	$ 5,120	$ 9,902	$ 12,456	$ 57,474	$ 1,837	$ 81,586	$ 10,354,084	$ 10,087,100

LINCOLN COUNTY, NEVADA
NONMAJOR SPECIAL REVENUE FUNDS
COMBINING SCHEDULE OF REVENUES, EXPENDITURES,
AND CHANGES IN FUND BALANCES
Year Ended June 30, 2020
(With Comparative Totals for Year Ended June 30, 2019)

	Pioche Town	Alamo Town	Panaca Town	Federal In Lieu Tax	Resource Development Authority	County Library	Museum	Senior Nutrition	Transportation	Agricultural Extension	Indigent	Medical Indigent
Revenues:												
Taxes	$ 57,478	$ 57,102	$ 12,858	$ -	$ -	$ 97,898	$ 49,903	$ 119,868	$ -	$ 23,285	$ 83,592	$ 186,277
Licenses and permits	4,855	-	-	-	-	-	-	-	-	-	-	-
Intergovernmental	58,178	24,178	43,697	974,644	67,169	93	47	138,220	94,589	22	78	175
Charges for services	-	-	-	-	-	-	-	21,891	3,091	-	-	-
Fines and forfeitures	-	-	-	-	-	-	-	-	-	-	-	-
Miscellaneous	10,685	7,793	772	55,752	1,000	160	3,297	2,375	-	-	-	13,367
Total revenues	131,196	89,073	57,327	1,030,396	68,169	98,151	53,247	282,354	97,680	23,307	83,670	199,819
Expenditures:												
General government	9,196	18,387	2,802	699,643	-	-	-	-	-	-	-	-
Public safety	-	-	-	99	-	-	-	-	-	-	-	-
Judicial	-	-	-	-	-	-	-	-	-	-	-	-
Public works	19,781	5,939	17,312	-	-	-	-	-	-	-	-	-
Health	6,489	-	11,194	-	-	-	-	-	-	-	-	-
Welfare	-	-	-	-	-	-	-	271,345	-	-	93,799	159,698
Culture and recreation	40,418	57,112	21,291	-	-	92,113	37,091	-	-	-	-	-
Community support	-	-	-	16,720	68,169	-	-	-	103,904	25,055	-	-
Intergovernmental	-	-	-	95,771	-	-	-	-	-	-	-	-
Debt service:												
Principal	-	-	-	24,157	-	-	-	-	-	-	-	-
Interest	-	-	-	1,784	-	-	-	-	-	-	-	-
Total expenditures	75,884	81,438	52,599	838,174	68,169	92,113	37,091	271,345	103,904	25,055	93,799	159,698
Excess (deficiency) of revenues over expenditures	55,312	7,635	4,728	192,222	-	6,038	16,156	11,009	(6,224)	(1,748)	(10,129)	40,121
Other financing sources (uses):												
Operating transfers in	-	-	-	-	-	-	-	33,308	35,000	-	-	-
Operating transfers out	-	-	-	(287,143)	-	-	-	-	-	-	-	-
Total other financing sources (uses)	-	-	-	(287,143)	-	-	-	33,308	35,000	-	-	-
Net change in fund balance before special items	55,312	7,635	4,728	(94,921)	-	6,038	16,156	44,317	28,776	(1,748)	(10,129)	40,121
Special items:												
Disposal of Tri-County Weed Control	-	-	-	-	-	-	-	-	-	-	-	-
Net change in fund balance	55,312	7,635	4,728	(94,921)	-	6,038	16,156	44,317	28,776	(1,748)	(10,129)	40,121
Fund balance:												
Beginning of year	179,959	78,203	21,857	2,128,828	-	58,952	67,892	56,488	175,608	27,428	360,122	398,120
End of year	$ 235,271	$ 85,838	$ 26,585	$ 2,033,907	$ -	$ 64,990	$ 84,048	$ 100,805	$ 204,384	$ 25,680	$ 349,993	$ 438,241

LINCOLN COUNTY, NEVADA
NONMAJOR SPECIAL REVENUE FUNDS
COMBINING SCHEDULE OF REVENUES, EXPENDITURES,
AND CHANGES IN FUND BALANCES
Year Ended June 30, 2020
(With Comparative Totals for Year Ended June 30, 2019)

	China Springs	Ambulance	Regional Streets and Highways	Room Tax	Legal Aid Services	Forensic Services	Administrative Assessment	Forfeiture	Recorder Technology	L. C. Housing Authority	Alamo Clinic
Revenues:											
Taxes	$ 9,779	$ -	$ -	$ 70,479	$ -	$ -	$ -	$ -	$ -	$ -	$ 98,959
Licenses and permits	-	-	-	-	-	-	-	-	-	-	-
Intergovernmental	9	10,231	123,268	-	-	-	-	27,052	-	-	93
Charges for services	-	134,391	-	-	1,652	1,977	-	-	8,325	-	-
Fines and forfeitures	-	-	-	-	-	-	30,503	-	-	-	-
Miscellaneous	-	921	25,044	-	-	-	2,971	2,259	821	35,571	-
Total revenues	9,788	145,543	148,312	70,479	1,652	1,977	33,474	29,311	9,146	35,571	99,052
Expenditures:											
General government	-	-	-	-	-	-	-	-	-	-	-
Public safety	-	-	-	-	-	5,306	-	34,530	-	-	-
Judicial	-	-	-	-	4,654	-	34,265	-	-	-	-
Public works	-	-	1,894	-	-	-	-	-	-	-	-
Health	-	135,640	-	-	-	-	-	-	-	-	99,381
Welfare	-	-	-	-	-	-	-	-	-	-	-
Culture and recreation	-	-	-	57,543	-	-	-	-	-	-	-
Community support	-	-	-	-	-	-	-	-	-	33,181	-
Intergovernmental	17,645	-	-	5,728	-	-	-	-	-	-	-
Debt service:											
Principal	-	-	-	-	-	-	-	-	-	-	-
Interest	-	-	-	-	-	-	-	-	-	-	-
Total expenditures	17,645	135,640	1,894	63,271	4,654	5,306	34,265	34,530	-	33,181	99,381
Excess (deficiency) of revenues over expenditures	(7,857)	9,903	146,418	7,208	(3,002)	(3,329)	(791)	(5,219)	9,146	2,390	(329)
Other financing sources (uses):											
Operating transfers in	10,000	-	-	-	-	-	-	-	-	-	-
Operating transfers out	-	-	(35,000)	(10,000)	-	-	-	-	-	-	-
Total other financing sources (uses)	10,000	-	(35,000)	(10,000)	-	-	-	-	-	-	-
Net change in fund balance before special items	2,143	9,903	111,418	(2,792)	(3,002)	(3,329)	(791)	(5,219)	9,146	2,390	(329)
Special items:											
Disposal of Tri-County Weed Control	-	-	-	-	-	-	-	-	-	-	-
Net change in fund balance	2,143	9,903	111,418	(2,792)	(3,002)	(3,329)	(791)	(5,219)	9,146	2,390	(329)
Fund balance:											
Beginning of year	1,454	23,668	670,274	97,984	(193)	8,503	111,117	51,335	23,490	19,814	496
End of year	$ 3,597	$ 33,571	$ 781,692	$ 95,192	$ (3,195)	$ 5,174	$ 110,326	$ 46,116	$ 32,636	$ 22,204	$ 167

LINCOLN COUNTY, NEVADA
NONMAJOR SPECIAL REVENUE FUNDS
COMBINING SCHEDULE OF REVENUES, EXPENDITURES,
AND CHANGES IN FUND BALANCES
Year Ended June 30, 2020
(With Comparative Totals for Year Ended June 30, 2019)

	Fair Board	Multi-Species Habitat Conservation	Multi-Species Habitat Conservation Section 7	Youth Activities Counsel	Genetic Marker Testing	Public Improvement	Airport	Panaca Town Building	Court Facility Fees	Tri County Weed Control	Lincoln County Land Act General
Revenues:											
Taxes	$ -	$ -	$ -	$ -	$ -	$ -	$ -	$ -	$ -	$ -	$ -
Licenses and permits	-	-	-	-	-	-	-	-	-	-	-
Intergovernmental	-	3,087	-	-	-	-	-	-	-	-	-
Charges for services	-	-	-	-	10,372	-	40,853	-	33,511	327,615	-
Fines and forfeitures	-	-	-	-	-	-	-	-	-	-	-
Miscellaneous	33,746	393	23,892	-	-	3,948	20,400	12,028	3,653	879	182
Total revenues	33,746	3,480	23,892	-	10,372	3,948	61,253	12,028	37,164	328,494	182
Expenditures:											
General government	-	3,480	-	-	10,372	-	-	10,800	-	186,640	-
Public safety	-	-	-	-	-	-	-	-	-	-	-
Judicial	-	-	-	-	-	-	-	-	57,876	-	-
Public works	-	-	-	-	-	-	30,302	-	-	-	-
Health	-	-	-	-	-	-	-	-	-	-	-
Welfare	-	-	-	-	-	-	-	-	-	-	-
Culture and recreation	39,823	-	-	-	-	-	-	-	-	-	-
Community support	-	-	-	-	-	-	-	-	-	-	-
Intergovernmental	-	-	-	-	-	-	-	-	-	-	-
Debt service:											
Principal	-	-	-	-	-	-	-	-	-	-	-
Interest	-	-	-	-	-	-	-	-	-	-	-
Total expenditures	39,823	3,480	-	-	10,372	-	30,302	10,800	57,876	186,640	-
Excess (deficiency) of revenues over expenditures	(6,077)	-	23,892	-	-	3,948	30,951	1,228	(20,712)	141,854	182
Other financing sources (uses):											
Operating transfers in	10,000	-	-	-	-	-	-	-	-	-	-
Operating transfers out	-	-	-	-	-	-	-	-	-	-	-
Total other financing sources (uses)	10,000	-	-	-	-	-	-	-	-	-	-
Net change in fund balance before special items	3,923	-	23,892	-	-	3,948	30,951	1,228	(20,712)	141,854	182
Special items:											
Disposal of Tri-County Weed Control	-	-	-	-	-	-	-	-	-	(313,853)	-
Net change in fund balance	3,923	-	23,892	-	-	3,948	30,951	1,228	(20,712)	(171,999)	182
Fund balance:											
Beginning of year	19,798	-	879,908	6,007	-	145,400	522	56,381	111,680	171,999	6,708
End of year	$ 23,721	$ -	$ 903,800	$ 6,007	$ -	$ 149,348	$ 31,473	$ 57,609	$ 90,968	$ -	$ 6,890

LINCOLN COUNTY, NEVADA
NONMAJOR SPECIAL REVENUE FUNDS
COMBINING SCHEDULE OF REVENUES, EXPENDITURES,
AND CHANGES IN FUND BALANCE
Year Ended June 30, 2020
(With Comparative Totals for Year Ended June 30, 2019)

	Lincoln County Land Act Planning and Development	Lincoln County Land Act Education	Lincoln County Land Act Grant Match	Lincoln County Water General	Lincoln County Water Special Projects	Lincoln County Water Planning and Development	Lincoln County Water Special Use	Lincoln County Water Grant Match	Lincoln County Water District General	Lincoln County Water District Plan & Dev	Lincoln County Water District Special Proj.
Revenues:											
Taxes	$ -	$ -	$ -	$ -	$ -	$ -	$ -	$ -	$ -	$ -	$ -
Licenses and permits	-	-	-	-	-	-	-	-	-	-	-
Intergovernmental	-	-	-	-	-	-	-	-	-	-	-
Charges for services	-	-	-	-	-	-	-	-	-	-	-
Fines and forfeitures	-	-	-	-	-	-	-	-	-	-	-
Miscellaneous	18	3,456	-	16	232	2,307	32,809	2,305	12,838	45,303	32,510
Total revenues	18	3,456	-	16	232	2,307	32,809	2,305	12,838	45,303	32,510
Expenditures:											
General government	-	-	-	-	-	-	-	-	177,825	-	8,000
Public safety	-	-	-	-	-	-	-	-	-	-	-
Judicial	-	-	-	-	-	-	-	-	-	-	-
Public works	-	-	-	-	-	-	-	-	-	-	-
Health	-	-	-	-	-	-	-	-	-	-	-
Welfare	-	-	-	-	-	-	-	-	-	-	-
Culture and recreation	-	-	-	-	-	-	-	-	-	-	-
Community support	-	-	-	-	-	-	-	-	-	-	-
Intergovernmental	-	-	-	-	-	-	-	-	-	-	-
Debt service											
Principal	-	-	-	-	-	-	-	-	-	-	-
Interest	-	-	-	-	-	-	-	-	-	-	-
Total expenditures	-	-	-	-	-	-	-	-	177,825	-	8,000
Excess (deficiency) of revenues over expenditures	18	3,456	-	16	232	2,307	32,809	2,305	(164,987)	45,303	24,510
Other financing sources (uses):											
Operating transfers in	-	-	-	-	-	-	-	-	200,000	-	-
Operating transfers out	-	-	(151)	-	-	-	-	-	-	-	-
Total other financing sources (uses)	-	-	(151)	-	-	-	-	-	200,000	-	-
Net change in fund balance before special items	18	3,456	(151)	16	232	2,307	32,809	2,305	35,013	45,303	24,510
Special items:											
Disposal of Tri-County Weed Control	-	-	-	-	-	-	-	-	-	-	-
Net change in fund balance	18	3,456	(151)	16	232	2,307	32,809	2,305	35,013	45,303	24,510
Fund balance:											
Beginning of year	683	127,265	151	618	8,565	84,957	1,379,058	84,893	281,620	906,833	708,869
End of year	$ 701	$ 130,721	$ -	$ 634	$ 8,797	$ 87,264	$ 1,411,867	$ 87,198	$ 316,633	$ 952,136	$ 733,379

LINCOLN COUNTY, NEVADA
NONMAJOR SPECIAL REVENUE FUNDS
COMBINING SCHEDULE OF REVENUES, EXPENDITURES,
AND CHANGES IN FUND BALANCE
Year Ended June 30, 2020
(With Comparative Totals for Year Ended June 30, 2019)

	Assessor Technology	District Court Technology	District Court Specialty Court	Court Security	District Court Enrichment	Demerit Point Reduction	Property Management	Totals 2020	Totals 2019
Revenues:									
Taxes	$ -	$ -	$ -	$ -	$ -	$ -	$ -	$ 867,478	$ 853,161
Licenses and permits	-	-	-	-	-	-	-	4,855	3,960
Intergovernmental	-	-	-	-	-	-	-	1,564,830	1,513,659
Charges for services	13,661	-	9,686	1,120	5,508	1,837	-	615,490	1,119,708
Fines and forfeitures	-	-	-	-	-	-	-	30,503	44,819
Miscellaneous	-	-	-	323	1,491	-	14,200	409,717	315,742
Total revenues	13,661	-	9,686	1,443	6,999	1,837	14,200	3,492,873	3,851,049
Expenditures:									
General government	10,000	-	-	-	-	-	46,492	1,183,637	1,688,640
Public safety	-	-	-	-	-	-	-	39,935	62,102
Judicial	-	-	16,050	-	-	-	-	112,845	61,694
Public works	-	-	-	-	-	-	-	75,228	95,383
Health	-	-	-	-	-	-	-	252,704	218,516
Welfare	-	-	-	-	-	-	-	524,842	564,610
Culture and recreation	-	-	-	-	-	-	-	345,391	335,923
Community support	-	-	-	-	-	-	-	247,029	246,153
Intergovernmental	-	-	-	-	-	-	-	119,144	107,939
Debt service:									
Principal	-	-	-	-	-	-	-	24,157	50,641
Interest	-	-	-	-	-	-	-	1,784	1,935
Total expenditures	10,000	-	16,050	-	-	-	46,492	2,926,696	3,433,536
Excess (deficiency) of revenues over expenditures	3,661	-	(6,364)	1,443	6,999	1,837	(32,292)	566,177	417,513
Other financing sources (uses):									
Operating transfers in	-	-	15,000	-	-	-	40,000	343,308	101,996
Operating transfers out	-	-	-	-	-	-	-	(332,294)	(235,970)
Total other financing sources (uses)	-	-	15,000	-	-	-	40,000	11,014	(133,974)
Net change in fund balance before special items	3,661	-	8,636	1,443	6,999	1,837	7,708	577,191	283,539
Special items:									
Disposal of Tri-County Weed Control	-	-	-	-	-	-	-	(313,853)	-
Net change in fund balance	3,661	-	8,636	1,443	6,999	1,837	7,708	263,338	283,539
Fund balance:									
Beginning of year	35,322	5,120	89	11,013	50,475	-	67,720	9,713,053	9,429,514
End of year	$ 38,983	$ 5,120	$ 8,725	$ 12,456	$ 57,474	$ 1,837	$ 75,428	$ 9,976,391	$ 9,713,053

LINCOLN COUNTY, NEVADA
NONMAJOR PIOCHE TOWN SPECIAL REVENUE FUND
COMPARATIVE BALANCE SHEETS
June 30, 2020 and 2019

	2020	2019
ASSETS		
Pooled cash and investments	$ 230,074	$ 180,251
Interest receivable	354	367
Taxes receivable	1,493	1,126
Due from other governments	10,714	9,852
Total assets	$ 242,635	$ 191,596
LIABILITIES		
Accounts payable	$ 2,969	$ 6,802
Accrued payroll and benefits	2,902	3,715
Total liabilities	5,871	10,517
DEFERRED INFLOWS OF RESOURCES		
Unavailable revenue - property taxes	1,493	1,120
FUND BALANCE		
Restricted	235,271	179,959
Total liabilities, deferred inflows of resources, and fund balance	$ 242,635	$ 191,596

LINCOLN COUNTY, NEVADA
NONMAJOR PIOCHE TOWN SPECIAL REVENUE FUND
SCHEDULE OF REVENUES, EXPENDITURES, AND CHANGES IN FUND BALANCE - BUDGET (GAAP BASIS) AND ACTUAL
Year Ended June 30, 2020

(With Comparative Actual Amounts for Year Ended June 30, 2019)

	2020 Budget	2020 Actual	Variance - Positive (Negative)	2019 Actual
Revenues:				
Taxes:				
Property taxes	$ 58,227	$ 57,478	$ (749)	$ 56,891
Licenses and permits:				
Gaming licenses	2,500	2,955	455	3,060
Liquor licenses	1,300	1,900	600	900
Total licenses and permits	3,800	4,855	1,055	3,960
Intergovernmental:				
Consolidated tax	56,847	58,178	1,331	56,672
Miscellaneous:				
Investment income	-	5,793	5,793	3,234
Rent	5,870	4,892	(978)	7,793
Total miscellaneous	5,870	10,685	4,815	11,027
Total revenues	124,744	131,196	6,452	128,550
Expenditures:				
Current:				
General government:				
Other general expenses:				
Employee benefits	926	916	10	963
Services and supplies	37,393	8,280	29,113	6,262
Total general government	38,319	9,196	29,123	7,225
Public works:				
Highways and streets:				
Salaries and wages	10,397	5,384	5,013	7,642
Employee benefits	3,478	2,309	1,169	2,914
Services and supplies	14,114	12,088	2,026	14,572
Total public works	27,989	19,781	8,208	25,128
Health:				
Cemetery:				
Salaries and wages	4,871	3,364	1,507	1,129
Employee benefits	588	1,252	(664)	396
Services and supplies	2,709	1,873	836	1,828
Total health	$ 8,168	$ 6,489	$ 1,679	$ 3,353

LINCOLN COUNTY, NEVADA
NONMAJOR PIOCHE TOWN SPECIAL REVENUE FUND (Continued)
SCHEDULE OF REVENUES, EXPENDITURES, AND CHANGES
IN FUND BALANCE - BUDGET (GAAP BASIS) AND ACTUAL
Year Ended June 30, 2020

(With Comparative Actual Amounts for Year Ended June 30, 2019)

	2020 Budget	2020 Actual	Variance - Positive (Negative)	2019 Actual
Expenditures: (Continued)				
Culture and recreation:				
Parks:				
Salaries and wages	$ 7,724	$ 7,763	$ (39)	$ 7,638
Employee benefits	2,848	2,768	80	2,265
Services and supplies	23,053	14,854	8,199	14,647
Total parks	33,625	25,385	8,240	24,550
Swimming pool:				
Salaries and wages	5,883	4,651	1,232	8,677
Employee benefits	2,058	989	1,069	2,028
Services and supplies	6,552	5,966	586	9,200
Capital outlay	12,000	-	12,000	-
Total swimming pool	26,493	11,606	14,887	19,905
Town hall:				
Salaries and wages	1,068	1,387	(319)	802
Employee benefits	426	630	(204)	436
Services and supplies	4,146	1,410	2,736	3,738
Total town hall	5,640	3,427	2,213	4,976
Total culture and recreation	65,758	40,418	25,340	49,431
Contingency	4,207	-	4,207	-
Total expenditures	144,441	75,884	68,557	85,137
Excess (deficiency) of revenues over expenditures	(19,697)	55,312	75,009	43,413
Other financing sources (uses):				
Operating transfers out	(22,075)	-	22,075	-
Net change in fund balance	(41,772)	55,312	97,084	43,413
Fund balance:				
Beginning of year	140,512	179,959	39,447	136,546
End of year	$ 98,740	$ 235,271	$ 136,531	$ 179,959

LINCOLN COUNTY, NEVADA
NONMAJOR ALAMO TOWN SPECIAL REVENUE FUND
COMPARATIVE BALANCE SHEETS
June 30, 2020 and 2019

	2020	2019
ASSETS		
Pooled cash and investments	$ 87,821	$ 80,197
Interest receivable	153	134
Taxes receivable	1,128	597
Due from other governments	4,449	4,101
Total assets	$ 93,551	$ 85,029
LIABILITIES		
Accounts payable	$ 6,365	$ 5,655
Accrued payroll and benefits	347	573
Total liabilities	6,712	6,228
DEFERRED INFLOWS OF RESOURCES		
Unavailable revenue - property taxes	1,001	598
FUND BALANCE		
Restricted	85,838	78,203
Total liabilities, deferred inflows of resources, and fund balance	$ 93,551	$ 85,029

LINCOLN COUNTY, NEVADA
NONMAJOR ALAMO TOWN SPECIAL REVENUE FUND
SCHEDULE OF REVENUES, EXPENDITURES, AND CHANGES
IN FUND BALANCE - BUDGET (GAAP BASIS) AND ACTUAL
Year Ended June 30, 2020
(With Comparative Actual Amounts for Year Ended June 30, 2019)

	2020		Variance - Positive	2019
	Budget	Actual	(Negative)	Actual
Revenues:				
Taxes:				
Property taxes	$ 57,373	$ 57,102	$ (271)	$ 54,656
Intergovernmental:				
Consolidated tax	23,603	24,178	575	23,547
Miscellaneous:				
Investment income	50	2,496	2,446	1,185
Other	4,000	5,297	1,297	6,084
Total miscellaneous	4,050	7,793	3,743	7,269
Total revenues	85,026	89,073	4,047	85,472
Expenditures:				
Current:				
General government:				
Salaries and wages	20,393	12,645	7,748	18,990
Employee benefits	3,107	792	2,315	2,405
Services and supplies	5,150	4,950	200	3,545
Total general government	28,650	18,387	10,263	24,940
Public works:				
Highways and streets:				
Services and supplies	5,600	5,939	(339)	418
Culture and recreation:				
P.V. senior center:				
Services and supplies	6,703	4,310	2,393	4,029
Parks:				
Services and supplies	53,297	52,802	495	47,018
Total culture and recreation	60,000	57,112	2,888	51,047
Total expenditures	$ 94,250	$ 81,438	$ 12,812	$ 76,405

LINCOLN COUNTY, NEVADA
NONMAJOR ALAMO TOWN SPECIAL REVENUE FUND (Continued)
SCHEDULE OF REVENUES, EXPENDITURES, AND CHANGES
IN FUND BALANCE - BUDGET (GAAP BASIS) AND ACTUAL
Year Ended June 30, 2020
(With Comparative Actual Amounts for Year Ended June 30, 2019)

	2020		Variance - Positive	2019
	Budget	Actual	(Negative)	Actual
Excess (deficiency) of revenues over expenditures	$ (9,224)	$ 7,635	$ 16,859	$ 9,067
Fund balance:				
Beginning of year	46,372	78,203	31,831	69,136
End of year	$ 37,148	$ 85,838	$ 48,690	$ 78,203

LINCOLN COUNTY, NEVADA
NONMAJOR PANACA TOWN SPECIAL REVENUE FUND
COMPARATIVE BALANCE SHEETS
June 30, 2020 and 2019

	2020	2019
ASSETS		
Pooled cash and investments	$ 21,212	$ 16,465
Interest receivable	35	31
Taxes receivable	394	307
Due from other governments	8,050	7,398
Total assets	$ 29,691	$ 24,201
LIABILITIES		
Accounts payable	$ 2,608	$ 1,895
Accrued payroll and benefits	123	189
Total liabilities	2,731	2,084
DEFERRED INFLOWS OF RESOURCES		
Unavailable revenue - property taxes	375	260
FUND BALANCE		
Restricted	26,585	21,857
Total liabilities, deferred inflows of resources, and fund balance	$ 29,691	$ 24,201

LINCOLN COUNTY, NEVADA
NONMAJOR PANACA TOWN SPECIAL REVENUE FUND
SCHEDULE OF REVENUES, EXPENDITURES, AND CHANGES
IN FUND BALANCE - BUDGET (GAAP BASIS) AND ACTUAL
Year Ended June 30, 2020

(With Comparative Actual Amounts for Year Ended June 30, 2019)

	2020 Budget	2020 Actual	Variance - Positive (Negative)	2019 Actual
Revenues:				
Taxes:				
Property taxes	$ 13,116	$ 12,858	$ (258)	$ 12,439
Intergovernmental:				
Consolidated tax	42,713	43,697	984	42,573
Miscellaneous:				
Investment income	-	573	573	274
Rent	750	150	(600)	475
Other	-	49	49	-
Total miscellaneous	750	772	22	749
Total revenues	56,579	57,327	748	55,761
Expenditures:				
Current:				
General government:				
Salaries and wages	-	45	(45)	-
Employee benefits	500	432	68	490
Services and supplies	2,350	2,325	25	2,168
Total general government	2,850	2,802	48	2,658
Public works:				
Highways and streets:				
Services and supplies	20,900	17,312	3,588	10,557
Health:				
Cemetery:				
Salaries and wages	9,915	9,600	315	9,600
Employee benefits	1,085	1,012	73	1,002
Services and supplies	550	582	(32)	481
Total health	$ 11,550	$ 11,194	$ 356	$ 11,083

LINCOLN COUNTY, NEVADA
NONMAJOR PANACA TOWN SPECIAL REVENUE FUND
SCHEDULE OF REVENUES, EXPENDITURES, AND CHANGES
IN FUND BALANCE - BUDGET (GAAP BASIS) AND ACTUAL
Year Ended June 30, 2020

(With Comparative Actual Amounts for Year Ended June 30, 2019)

	2020 Budget	2020 Actual	Variance - Positive (Negative)	2019 Actual
Expenditures continued:				
Culture and recreation:				
Parks:				
Services and supplies	$ 13,000	$ 10,872	$ 2,128	$ 12,811
Town hall:				
Salaries and wages	2,601	2,400	201	2,400
Employee benefits	199	184	15	184
Services and supplies	7,000	7,835	(835)	7,376
Total culture and recreation	22,800	21,291	1,509	22,771
Total expenditures	58,100	52,599	5,501	47,069
Excess (deficiency) of revenues over expenditures	(1,521)	4,728	6,249	8,692
Fund balance:				
Beginning of year	15,437	21,857	6,420	13,165
End of year	$ 13,916	$ 26,585	$ 12,669	$ 21,857

LINCOLN COUNTY, NEVADA
NONMAJOR FUND - FEDERAL IN LIEU TAX SPECIAL REVENUE FUND (012)
COMPARATIVE BALANCE SHEETS
June 30, 2020 and 2019

	2020	2019
ASSETS		
Pooled cash and investments	$ 2,044,054	$ 2,149,537
Interest receivable	6,699	4,751
Due from other governments	10,309	-
Total assets	$ 2,061,062	$ 2,154,288
LIABILITIES		
Accounts payable	$ 27,155	$ 25,460
FUND BALANCE		
Committed	2,033,907	2,128,828
Total liabilities and fund balance	$ 2,061,062	$ 2,154,288

LINCOLN COUNTY, NEVADA
NONMAJOR FUND - FEDERAL IN LIEU TAX SPECIAL REVENUE FUND (012)
SCHEDULE OF REVENUES, EXPENDITURES, AND CHANGES
IN FUND BALANCE - BUDGET (GAAP BASIS) AND ACTUAL
Year Ended June 30, 2020
(With Comparative Actual Amounts for Year Ended June 30, 2019)

	2020 Budget	2020 Actual	Variance - Positive (Negative)	2019 Actual
Revenues:				
Intergovernmental:				
Federal in lieu tax	$ 911,526	$ 974,644	$ 63,118	$ 932,088
Grants	-	-	-	6,978
Total intergovernmental	911,526	974,644	63,118	939,066
Miscellaneous:				
Investment income	5,000	55,752	50,752	41,902
Total revenues	916,526	1,030,396	113,870	980,968
Expenditures:				
Current:				
General government:				
Service and supplies	1,114,602	619,695	494,907	500,284
Capital outlay	192,900	79,948	112,952	33,018
Total general government	1,307,502	699,643	607,859	533,302
Public safety:				
Service and supplies	71,204	99	71,105	52,533
Capital outlay	105,347	-	105,347	-
Total public safety	176,551	99	176,452	52,533
Public works:				
Service and supplies	20,000	-	20,000	-
Community support:				
Service and supplies	27,602	6,720	20,882	16,602
Capital outlay	1,800	10,000	(8,200)	-
Total community support	29,402	16,720	12,682	16,602
Intergovernmental:				
Service and supplies	110,245	95,771	14,474	83,755
Debt service:				
Principal	24,157	24,157	-	50,641
Interest	271	1,784	(1,513)	1,935
Total debt service	24,428	25,941	(1,513)	52,576
Total expenditures	$ 1,668,128	$ 838,174	$ 829,954	$ 738,768

LINCOLN COUNTY, NEVADA
NONMAJOR FUND - FEDERAL IN LIEU TAX SPECIAL REVENUE FUND
SCHEDULE OF REVENUES, EXPENDITURES, AND CHANGES
IN FUND BALANCE - BUDGET (GAAP BASIS) AND ACTUAL
Year Ended June 30, 2020
(With Comparative Actual Amounts for Year Ended June 30, 2019)

	2020		Variance - Positive	2019
	Budget	Actual	(Negative)	Actual
Excess (deficiency) of revenues over expenditures	$ (751,602)	$ 192,222	$ 943,824	$ 242,200
Other financing sources (uses):				
Operating transfers out	(199,000)	(287,143)	(88,143)	(197,164)
Net change in fund balance	(950,602)	(94,921)	855,681	45,036
Fund balance:				
Beginning of year	1,121,552	2,128,828	1,007,276	2,083,792
End of year	$ 170,950	$ 2,033,907	$ 1,862,957	$ 2,128,828

LINCOLN COUNTY, NEVADA
NONMAJOR RESOURCE DEVELOPMENT AUTHORITY SPECIAL REVENUE FUND
COMPARATIVE BALANCE SHEETS
June 30, 2020 and 2019

	2020	2019
ASSETS		
Pooled cash and investments	$ 85,249	$ 87,564
LIABILITIES		
Accounts payable	$ 2,659	$ 9,291
Unearned revenue	82,590	78,273
Total liabilities	85,249	87,564
FUND BALANCE		
Nonspendable	-	-
Total liabilities and fund balance	$ 85,249	$ 87,564

LINCOLN COUNTY, NEVADA
NONMAJOR RESOURCE DEVELOPMENT AUTHORITY SPECIAL REVENUE FUND
SCHEDULE OF REVENUES, EXPENDITURES, AND CHANGES
IN FUND BALANCE - BUDGET (GAAP BASIS) AND ACTUAL
Year Ended June 30, 2020
(With Comparative Actual Amounts for Year Ended June 30, 2019)

	2020 Budget	2020 Actual	Variance - Positive (Negative)	2019 Actual
Revenues:				
Intergovernmental:				
Grants	$ 149,759	$ 67,169	$ (82,590)	$ 63,101
Miscellaneous:				
Donations	-	1,000	1,000	1,000
Total revenues	149,759	68,169	(81,590)	64,101
Expenditures:				
Current:				
Community support:				
Services and supplies	149,759	63,782	85,977	31,588
Capital outlay	-	4,387	(4,387)	32,513
Total expenditures	149,759	68,169	81,590	64,101
Excess (deficiency) of revenues over expenditures	-	-	-	-
Fund balance:				
Beginning of year	-	-	-	-
End of year	$ -	$ -	$ -	$ -

LINCOLN COUNTY, NEVADA
NONMAJOR COUNTY LIBRARY SPECIAL REVENUE FUND
COMPARATIVE BALANCE SHEETS
June 30, 2020 and 2019

	2020	2019
ASSETS		
Pooled cash and investments	$ 69,766	$ 63,313
Taxes receivable	1,298	1,438
Total assets	$ 71,064	$ 64,751
LIABILITIES		
Accounts payable	$ 1,277	$ 1,419
Accrued payroll and benefits	3,665	3,243
Total liabilities	4,942	4,662
DEFERRED INFLOWS OF RESOURCES		
Unavailable revenue - property taxes	1,132	1,137
FUND BALANCE		
Restricted	64,990	58,952
Total liabilities, deferred inflows of resources, and fund balance	$ 71,064	$ 64,751

LINCOLN COUNTY, NEVADA
NONMAJOR COUNTY LIBRARY SPECIAL REVENUE FUND
SCHEDULE OF REVENUES, EXPENDITURES, AND CHANGES IN FUND BALANCE - BUDGET (GAAP BASIS) AND ACTUAL
Year Ended June 30, 2020
(With Comparative Actual Amounts for Year Ended June 30, 2019)

	2020		Variance - Positive	2019
	Budget	Actual	(Negative)	Actual
Revenues:				
Taxes:				
Property taxes	$ 99,696	$ 97,898	$ (1,798)	$ 96,441
Intergovernmental:				
Fish and wildlife	-	93	93	107
Miscellaneous:				
Other	-	160	160	130
Donations	-	-	-	333
Total miscellaneous	-	160	160	463
Total revenues	99,696	98,151	(1,545)	97,011
Expenditures:				
Current:				
Culture and recreation:				
Libraries:				
Salaries and wages	50,140	46,100	4,040	44,547
Employee benefits	21,955	21,597	358	20,201
Services and supplies	35,100	24,416	10,684	24,298
Capital outlay	15,000	-	15,000	-
Total expenditures	122,195	92,113	30,082	89,046
Excess (deficiency) of revenues over expenditures	(22,499)	6,038	28,537	7,965
Fund balance:				
Beginning of year	30,290	58,952	28,662	50,987
End of year	$ 7,791	$ 64,990	$ 57,199	$ 58,952

LINCOLN COUNTY, NEVADA
NONMAJOR MUSEUM SPECIAL REVENUE FUND
COMPARATIVE BALANCE SHEETS
June 30, 2020 and 2019

	2020	2019
ASSETS		
Pooled cash and investments	$ 86,180	$ 70,536
Taxes receivable	659	731
Total assets	$ 86,839	$ 71,267
LIABILITIES		
Accounts payable	$ 785	$ 241
Accrued payroll and benefits	1,431	2,555
Total liabilities	2,216	2,796
DEFERRED INFLOWS OF RESOURCES		
Unavailable revenue - property taxes	575	579
FUND BALANCE		
Restricted	84,048	67,892
Total liabilities, deferred inflows of resources, and fund balance	$ 86,839	$ 71,267

LINCOLN COUNTY, NEVADA
NONMAJOR MUSEUM SPECIAL REVENUE FUND
SCHEDULE OF REVENUES, EXPENDITURES, AND CHANGES IN FUND BALANCE - BUDGET (GAAP BASIS) AND ACTUAL
Year Ended June 30, 2020
(With Comparative Actual Amounts for Year Ended June 30, 2019)

	2020		Variance - Positive	2019
	Budget	Actual	(Negative)	Actual
Revenues:				
Taxes:				
Property taxes	$ 50,902	$ 49,903	$ (999)	$ 49,172
Intergovernmental:				
Fish and wildlife	-	47	47	54
Miscellaneous:				
Donations	-	3,297	3,297	6,421
Total revenues	50,902	53,247	2,345	55,647
Expenditures:				
Current:				
Culture and recreation:				
Museum:				
Salaries and wages	43,557	26,050	17,507	29,257
Employee benefits	11,531	4,507	7,024	9,622
Services and supplies	13,500	6,534	6,966	6,228
Total expenditures	68,588	37,091	31,497	45,107
Net change in fund balance	(17,686)	16,156	33,842	10,540
Fund balance:				
Beginning of year	24,934	67,892	42,958	57,352
End of year	$ 7,248	$ 84,048	$ 76,800	$ 67,892

LINCOLN COUNTY, NEVADA
NONMAJOR SENIOR NUTRITION SPECIAL REVENUE FUND
COMPARATIVE BALANCE SHEETS
June 30, 2020 and 2019

	2020	2019
ASSETS		
Pooled cash and investments	$ 101,505	$ 47,466
Taxes receivable	1,596	1,760
Due from other governments	15,257	25,493
Total assets	$ 118,358	$ 74,719
LIABILITIES		
Accounts payable	$ 9,828	$ 10,692
Accrued payroll and benefits	6,331	6,144
Total liabilities	16,159	16,836
DEFERRED INFLOWS OF RESOURCES		
Unavailable revenue - property taxes	1,394	1,395
FUND BALANCE		
Restricted	100,805	56,488
Total liabilities, deferred inflows of resources, and fund balance	$ 118,358	$ 74,719

LINCOLN COUNTY, NEVADA
NONMAJOR SENIOR NUTRITION SPECIAL REVENUE FUND
SCHEDULE OF REVENUES, EXPENDITURES, AND CHANGES
IN FUND BALANCE - BUDGET (GAAP BASIS) AND ACTUAL
Year Ended June 30, 2020
(With Comparative Actual Amounts for Year Ended June 30, 2019)

	2020		Variance - Positive	2019
	Budget	Actual	(Negative)	Actual
Revenues:				
Taxes:				
Property taxes	$ 122,792	$ 119,868	$ (2,924)	$ 118,181
Intergovernmental:				
Grants	130,000	138,107	8,107	184,060
Fish and wildlife	115	113	(2)	129
Total intergovernmental	130,115	138,220	8,105	184,189
Charges for services:				
Sales - meals	25,000	21,891	(3,109)	23,859
Miscellaneous:				
Other	2,000	-	(2,000)	-
Donations	-	2,375	2,375	1,439
Total miscellaneous	2,000	2,375	375	1,439
Total revenues	279,907	282,354	2,447	327,668
Expenditures:				
Current:				
Welfare:				
Salaries and wages	75,953	71,785	4,168	74,243
Employee benefits	35,293	36,633	(1,340)	35,477
Services and supplies	193,500	162,927	30,573	163,188
Capital outlay	-	-	-	46,472
Total expenditures	304,746	271,345	33,401	319,380
Excess (deficiency) of revenues over expenditures	(24,839)	11,009	35,848	8,288
Other financing sources (uses):				
Operating transfers in	14,000	33,308	19,308	13,190
Net change in fund balance	(10,839)	44,317	55,156	21,478
Fund balance:				
Beginning of year	30,208	56,488	26,280	35,010
End of year	$ 19,369	$ 100,805	$ 81,436	$ 56,488

LINCOLN COUNTY, NEVADA
NONMAJOR TRANSPORTATION SPECIAL REVENUE FUND
COMPARATIVE BALANCE SHEETS
June 30, 2020 and 2019

	2020	2019
ASSETS		
Pooled cash and investments	$ 200,082	$ 177,516
Due from other governments	9,825	9,375
Total assets	$ 209,907	$ 186,891
LIABILITIES		
Accounts payable	$ 956	$ 7,324
Accrued payroll and benefits	4,567	3,959
Total liabilities	5,523	11,283
FUND BALANCE		
Restricted	204,384	175,608
Total liabilities and fund balance	$ 209,907	$ 186,891

LINCOLN COUNTY, NEVADA
NONMAJOR TRANSPORTATION SPECIAL REVENUE FUND
SCHEDULE OF REVENUES, EXPENDITURES, AND CHANGES
IN FUND BALANCE - BUDGET (GAAP BASIS) AND ACTUAL
Year Ended June 30, 2020
(With Comparative Actual Amounts for Year Ended June 30, 2019)

	2020		Variance - Positive	2019
	Budget	Actual	(Negative)	Actual
Revenues:				
Intergovernmental:				
Grants	$ 70,000	$ 94,589	$ 24,589	$ 78,402
Charges for services:				
Bus fares	5,800	3,091	(2,709)	4,297
Total revenues	75,800	97,680	21,880	82,699
Expenditures:				
Current:				
Community support:				
Salaries and wages	52,840	49,106	3,734	42,971
Employee benefits	29,352	28,429	923	25,479
Services and supplies	51,400	26,369	25,031	29,936
Total expenditures	133,592	103,904	29,688	98,386
Excess (deficiency) of revenues over expenditures	(57,792)	(6,224)	51,568	(15,687)
Other financing sources (uses):				
Operating transfers in	35,000	35,000	-	28,806
Net change in fund balance	(22,792)	28,776	51,568	13,119
Fund balance:				
Beginning of year	173,632	175,608	1,976	162,489
End of year	$ 150,840	$ 204,384	$ 53,544	$ 175,608

LINCOLN COUNTY, NEVADA
NONMAJOR AGRICULTURAL EXTENSION SPECIAL REVENUE FUND
COMPARATIVE BALANCE SHEETS
June 30, 2020 and 2019

	2020	2019
ASSETS		
Pooled cash and investments	$ 28,053	$ 28,503
Taxes receivable	311	342
Total assets	$ 28,364	$ 28,845
LIABILITIES		
Accounts payable	$ 1,810	$ 483
Accrued payroll and benefits	602	662
Total liabilities	2,412	1,145
DEFERRED INFLOWS OF RESOURCES		
Unavailable revenue - property taxes	272	272
FUND BALANCE		
Restricted	25,680	27,428
Total liabilities, deferred inflows of resources, and fund balance	$ 28,364	$ 28,845

LINCOLN COUNTY, NEVADA
NONMAJOR AGRICULTURAL EXTENSION SPECIAL REVENUE FUND
SCHEDULE OF REVENUES, EXPENDITURES, AND CHANGES
IN FUND BALANCE - BUDGET (GAAP BASIS) AND ACTUAL
Year Ended June 30, 2020
(With Comparative Actual Amounts for Year Ended June 30, 2019)

	2020 Budget	2020 Actual	Variance - Positive (Negative)	2019 Actual
Revenues:				
Taxes:				
Property taxes	$ 23,858	$ 23,285	$ (573)	$ 22,958
Intergovernmental:				
Fish and wildlife	-	22	22	25
Miscellaneous:				
Other	5,460	-	(5,460)	-
Total revenues	29,318	23,307	(6,011)	22,983
Expenditures:				
Current:				
Community support:				
Salaries and wages	13,913	13,507	406	13,403
Employee benefits	1,481	1,616	(135)	1,399
Services and supplies	25,420	9,932	15,488	6,194
Total expenditures	40,814	25,055	15,759	20,996
Excess (deficiency) of revenues over expenditures	(11,496)	(1,748)	9,748	1,987
Fund balance:				
Beginning of year	22,252	27,428	5,176	25,441
End of year	$ 10,756	$ 25,680	$ 14,924	$ 27,428

LINCOLN COUNTY, NEVADA
NONMAJOR INDIGENT SPECIAL REVENUE FUND
COMPARATIVE BALANCE SHEETS
June 30, 2020 and 2019

	2020	2019
ASSETS		
Pooled cash and investments	$ 364,791	$ 378,913
Taxes receivable	1,117	1,231
Total assets	$ 365,908	$ 380,144
LIABILITIES		
Accounts payable	$ 11,442	$ 15,178
Accrued payroll and benefits	3,496	3,867
Total liabilities	14,938	19,045
DEFERRED INFLOWS OF RESOURCES		
Unavailable revenue - property taxes	977	977
FUND BALANCE		
Restricted	349,993	360,122
Total liabilities, deferred inflows of resources, and fund balance	$ 365,908	$ 380,144

LINCOLN COUNTY, NEVADA
NONMAJOR INDIGENT SPECIAL REVENUE FUND
SCHEDULE OF REVENUES, EXPENDITURES, AND CHANGES IN FUND BALANCE - BUDGET (GAAP BASIS) AND ACTUAL
Year Ended June 30, 2020
(With Comparative Actual Amounts for Year Ended June 30, 2019)

	2020 Budget	2020 Actual	Variance - Positive (Negative)	2019 Actual
Revenues:				
Taxes:				
Property taxes	$ 85,648	$ 83,592	$ (2,056)	$ 82,419
Intergovernmental:				
Fish and wildlife	-	78	78	91
Total revenues	85,648	83,670	(1,978)	82,510
Expenditures:				
Current:				
Welfare:				
Salaries and wages	51,699	47,378	4,321	48,490
Employee benefits	21,840	19,505	2,335	20,290
Service and supplies	291,401	18,927	272,474	21,560
Jail:				
Service and supplies	25,000	7,989	17,011	-
Total expenditures	389,940	93,799	296,141	90,340
Excess (deficiency) of revenues over expenditures	(304,292)	(10,129)	294,163	(7,830)
Fund balance:				
Beginning of year	304,292	360,122	55,830	367,952
End of year	$ -	$ 349,993	$ 349,993	$ 360,122

LINCOLN COUNTY, NEVADA
NONMAJOR MEDICAL INDIGENT SPECIAL REVENUE FUND
COMPARATIVE BALANCE SHEETS
June 30, 2020 and 2019

	2020	2019
ASSETS		
Pooled cash and investments	$ 517,096	$ 414,480
Interest receivable	817	930
Taxes receivable	2,491	2,742
Total assets	$ 520,404	$ 418,152
LIABILITIES		
Accounts payable	$ 79,986	$ 17,855
DEFERRED INFLOWS OF RESOURCES		
Unavailable revenue - property taxes	2,177	2,177
FUND BALANCE		
Restricted	438,241	398,120
Total liabilities, deferred inflows of resources, and fund balance	$ 520,404	$ 418,152

LINCOLN COUNTY, NEVADA
NONMAJOR MEDICAL INDIGENT SPECIAL REVENUE FUND
SCHEDULE OF REVENUES, EXPENDITURES, AND CHANGES IN FUND BALANCE - BUDGET (GAAP BASIS) AND ACTUAL
Year Ended June 30, 2020
(With Comparative Actual Amounts for Year Ended June 30, 2019)

	2020 Budget	2020 Actual	Variance - Positive (Negative)	2019 Actual
Revenues:				
Taxes:				
Property taxes	$ 190,862	$ 186,277	$ (4,585)	$ 183,666
Intergovernmental:				
Fish and wildlife	-	175	175	201
Miscellaneous:				
Investment income	300	13,367	13,067	8,200
Total revenues	191,162	199,819	8,657	192,067
Expenditures:				
Current:				
Welfare:				
Service and supplies	412,209	159,698	252,511	154,890
Excess (deficiency) of revenues over expenditures	(221,047)	40,121	261,168	37,177
Fund balance:				
Beginning of year	411,909	398,120	(13,789)	360,943
End of year	$ 190,862	$ 438,241	$ 247,379	$ 398,120

LINCOLN COUNTY, NEVADA
NONMAJOR CHINA SPRINGS SPECIAL REVENUE FUND
COMPARATIVE BALANCE SHEETS
June 30, 2020 and 2019

	2020	2019
ASSETS		
Pooled cash and investments	$ 3,579	$ 1,422
Taxes receivable	131	144
Due from other governments	-	2
Total assets	$ 3,710	$ 1,568
LIABILITIES		
Accounts payable	$ -	$ -
DEFERRED INFLOWS OF RESOURCES		
Unavailable revenue - property taxes	113	114
FUND BALANCE		
Restricted	3,597	1,454
Total liabilities, deferred inflows of resources, and fund balance	$ 3,710	$ 1,568

LINCOLN COUNTY, NEVADA
NONMAJOR CHINA SPRINGS SPECIAL REVENUE FUND
SCHEDULE OF REVENUES, EXPENDITURES, AND CHANGES
IN FUND BALANCE - BUDGET (GAAP BASIS) AND ACTUAL
Year Ended June 30, 2020
(With Comparative Actual Amounts for Year Ended June 30, 2019)

	2020		Variance - Positive	2019
	Budget	Actual	(Negative)	Actual
Revenues:				
Taxes:				
Property taxes	$ 10,021	$ 9,779	$ (242)	$ 9,644
Intergovernmental:				
Fish and wildlife	-	9	9	11
Total revenues	10,021	9,788	(233)	9,655
Expenditures:				
Current:				
Intergovernmental:				
Services and supplies	19,553	17,645	1,908	19,305
Excess (deficiency) of revenues over expenditures	(9,532)	(7,857)	1,675	(9,650)
Other financing sources (uses):				
Operating transfers in	10,000	10,000	-	10,000
Net change in fund balance	468	2,143	1,675	350
Fund balance:				
Beginning of year	1,104	1,454	350	1,104
End of year	$ 1,572	$ 3,597	$ 2,025	$ 1,454

LINCOLN COUNTY, NEVADA
NONMAJOR AMBULANCE SPECIAL REVENUE FUND
COMPARATIVE BALANCE SHEETS
June 30, 2020 and 2019

	2020	2019
ASSETS		
Pooled cash and investments	$ 29,170	$ 27,537
Interest receivable	56	29
Due from others	10,230	-
Total assets	$ 39,456	$ 27,566
LIABILITIES		
Accounts payable	$ 3,672	$ 2,748
Accrued payroll and benefits	2,213	1,150
Total liabilities	5,885	3,898
FUND BALANCE		
Committed	33,571	23,668
Total liabilities and fund balance	$ 39,456	$ 27,566

LINCOLN COUNTY, NEVADA
NONMAJOR AMBULANCE SPECIAL REVENUE FUND
SCHEDULE OF REVENUES, EXPENDITURES, AND CHANGES IN FUND BALANCE - BUDGET (GAAP BASIS) AND ACTUAL
Year Ended June 30, 2020
(With Comparative Actual Amounts for Year Ended June 30, 2019)

	2020 Budget	2020 Actual	Variance - Positive (Negative)	2019 Actual
Revenues:				
Intergovernmental:				
Grant	$ -	$ 5,231	$ 5,231	$ -
Mutual aid agreement	-	5,000	5,000	-
Total intergovernmental	-	10,231	10,231	-
Charges for services:				
Ambulance fees	126,255	134,391	8,136	120,597
Miscellaneous:				
Investment income	861	921	60	259
Total revenues	127,116	145,543	18,427	120,856
Expenditures:				
Current:				
Health:				
Salaries and wages	66,784	49,115	17,669	36,260
Employee benefits	10,400	7,990	2,410	5,850
Services and supplies	73,600	69,208	4,392	64,531
Capital outlay	-	9,327	(9,327)	-
Total expenditures	150,784	135,640	15,144	106,641
Excess (deficiency) of revenues over expenditures	(23,668)	9,903	33,571	14,215
Fund balance:				
Beginning of year	23,668	23,668	-	9,453
End of year	$ -	$ 33,571	$ 33,571	$ 23,668

LINCOLN COUNTY, NEVADA
NONMAJOR REGIONAL TRANSPORTATION COMMISSION SPECIAL REVENUE FUND
COMPARATIVE BALANCE SHEETS
June 30, 2020 and 2019

	2020	2019
ASSETS		
Pooled cash and investments	$ 755,110	$ 641,915
Interest receivable	2,957	1,233
Due from other governments	23,860	32,939
Total assets	$ 781,927	$ 676,087
LIABILITIES		
Accounts payable	$ 235	$ 5,750
Accrued payroll and benefits	-	63
Total liabilities	235	5,813
FUND BALANCE		
Restricted	781,692	670,274
Total liabilities and fund balance	$ 781,927	$ 676,087

LINCOLN COUNTY, NEVADA
NONMAJOR REGIONAL TRANSPORTATION COMMISSION SPECIAL REVENUE FUND
SCHEDULE OF REVENUES, EXPENDITURES, AND CHANGES
IN FUND BALANCE - BUDGET (GAAP BASIS) AND ACTUAL
Year Ended June 30, 2020
(With Comparative Actual Amounts for Year Ended June 30, 2019)

	2020 Budget	2020 Actual	Variance - Positive (Negative)	2019 Actual
Revenues:				
Intergovernmental:				
Optional $0.04 gas tax	$ 120,221	$ 123,268	$ 3,047	$ 119,694
Miscellaneous:				
Investment income	2,000	25,044	23,044	10,876
Total revenues	122,221	148,312	26,091	130,570
Expenditures:				
Current:				
Public works:				
Employee benefits	-	130	(130)	254
Services and supplies	450,000	1,764	448,236	10,727
Capital outlay	-	-	-	22,350
Total expenditures	450,000	1,894	448,106	33,331
Excess (deficiency) of revenues over expenditures	(327,779)	146,418	474,197	97,239
Other financing sources (uses):				
Operating transfers out	(35,000)	(35,000)	-	(28,806)
Net change in fund balance	(362,779)	111,418	474,197	68,433
Fund balance:				
Beginning of year	369,554	670,274	300,720	601,841
End of year	$ 6,775	$ 781,692	$ 774,917	$ 670,274

LINCOLN COUNTY, NEVADA
NONMAJOR ROOM TAX SPECIAL REVENUE FUND
COMPARATIVE BALANCE SHEETS
June 30, 2020 and 2019

	2020	2019
ASSETS		
Pooled cash and investments	$ 98,711	$ 92,393
Taxes receivable	7,746	9,413
Total assets	$ 106,457	$ 101,806
LIABILITIES		
Accounts payable	$ 10,895	$ 3,384
Accrued payroll and benefits	370	438
Total liabilities	11,265	3,822
FUND BALANCE		
Restricted	95,192	97,984
Total liabilities and fund balance	$ 106,457	$ 101,806

LINCOLN COUNTY, NEVADA
NONMAJOR ROOM TAX SPECIAL REVENUE FUND
SCHEDULE OF REVENUES, EXPENDITURES AND CHANGES IN FUND BALANCE - BUDGET (GAAP BASIS) AND ACTUAL
Year Ended June 30, 2020
(With Comparative Actual Amounts for Year Ended June 30, 2019)

	2020 Budget	2020 Actual	Variance - Positive (Negative)	2019 Actual
Revenues:				
Taxes:				
Room tax	$ 75,000	$ 70,479	$ (4,521)	$ 69,119
Expenditures:				
Current:				
Culture and recreation:				
Salaries and wages	3,500	3,360	140	2,800
Employee benefits	900	681	219	698
Services and supplies	64,100	53,502	10,598	32,569
Total culture and recreation	68,500	57,543	10,957	36,067
Intergovernmental:				
Services and supplies	6,500	5,728	772	4,879
Total expenditures	75,000	63,271	11,729	40,946
Excess (deficiency) of revenues over expenditures	-	7,208	7,208	28,173
Other financing sources (uses):				
Operating transfers out	(10,000)	(10,000)	-	(10,000)
Net change in fund balance	(10,000)	(2,792)	7,208	18,173
Fund balance:				
Beginning of year	92,911	97,984	5,073	79,811
End of year	$ 82,911	$ 95,192	$ 12,281	$ 97,984

LINCOLN COUNTY, NEVADA
NONMAJOR LEGAL AID SERVICES SPECIAL REVENUE FUND
COMPARATIVE BALANCE SHEETS
June 30, 2020 and 2019

	2020	2019
ASSETS		
Pooled cash and investments	$ (3,195)	$ 577
LIABILITIES		
Accounts payable	$ -	$ 770
FUND BALANCE		
Unassigned	(3,195)	(193)
Total liabilities and fund balance	$ (3,195)	$ 577

LINCOLN COUNTY, NEVADA
NONMAJOR LEGAL AID SERVICES SPECIAL REVENUE FUND
SCHEDULE OF REVENUES, EXPENDITURES, AND CHANGES IN FUND BALANCE - BUDGET (GAAP BASIS) AND ACTUAL
Year Ended June 30, 2020
(With Comparative Actual Amounts for Year Ended June 30, 2019)

	2020		Variance - Positive	2019
	Budget	Actual	(Negative)	Actual
Revenues:				
Charges for services:				
Other	$ 2,000	$ 1,652	$ (348)	$ 1,743
Expenditures:				
Current:				
Judicial:				
Services and supplies	10,000	4,654	5,346	12,566
Excess (deficiency) of revenues over expenditures	(8,000)	(3,002)	4,998	(10,823)
Fund balance:				
Beginning of year	8,000	(193)	(8,193)	10,630
End of year	$ -	$ (3,195)	$ (3,195)	$ (193)

LINCOLN COUNTY, NEVADA
NONMAJOR FORENSIC SERVICES SPECIAL REVENUE FUND
COMPARATIVE BALANCE SHEETS
June 30, 2020 and 2019

	2020	2019
ASSETS		
Pooled cash and investments	$ 5,751	$ 8,628
LIABILITIES		
Accounts payable	$ 577	$ 125
FUND BALANCE		
Restricted	5,174	8,503
Total liabilities and fund balance	$ 5,751	$ 8,628

LINCOLN COUNTY, NEVADA
NONMAJOR FORENSIC SERVICES SPECIAL REVENUE FUND
SCHEDULE OF REVENUES, EXPENDITURES, AND CHANGES IN FUND BALANCE - BUDGET (GAAP BASIS) AND ACTUAL
Year Ended June 30, 2020
(With Comparative Actual Amounts for Year Ended June 30, 2019)

	2020 Budget	2020 Actual	Variance - Positive (Negative)	2019 Actual
Revenues:				
Charges for services:				
Other	$ 2,500	$ 1,977	$ (523)	$ 2,066
Expenditures:				
Current:				
Public safety:				
Service and supplies	10,500	5,306	5,194	1,323
Excess (deficiency) of revenues over expenditures	(8,000)	(3,329)	4,671	743
Fund balance:				
Beginning of year	10,000	8,503	(1,497)	7,760
End of year	$ 2,000	$ 5,174	$ 3,174	$ 8,503

LINCOLN COUNTY, NEVADA
NONMAJOR ADMINISTRATIVE ASSESSMENT SPECIAL REVENUE FUND
COMPARATIVE BALANCE SHEETS
June 30, 2020 and 2019

	2020	2019
ASSETS		
Pooled cash and investments	$ 111,115	$ 110,998
Interest receivable	183	219
Total assets	$ 111,298	$ 111,217
LIABILITIES		
Accounts payable	$ 972	$ 100
FUND BALANCE		
Restricted	110,326	111,117
Total liabilities and fund balance	$ 111,298	$ 111,217

LINCOLN COUNTY, NEVADA
NONMAJOR ADMINISTRATIVE ASSESSMENT SPECIAL REVENUE FUND
SCHEDULE OF REVENUES, EXPENDITURES, AND CHANGES
IN FUND BALANCE - BUDGET (GAAP BASIS) AND ACTUAL
Year Ended June 30, 2020
(With Comparative Actual Amounts for Year Ended June 30, 2019)

	2020 Budget	2020 Actual	Variance - Positive (Negative)	2019 Actual
Revenues:				
Fines and forfeitures:				
Administrative assessments	$ 34,000	$ 30,503	$ (3,497)	$ 44,819
Miscellaneous:				
Investment income	160	2,971	2,811	1,939
Total revenues	34,160	33,474	(686)	46,758
Expenditures:				
Current:				
Judicial:				
Services and supplies	8,258	34,265	(26,007)	9,808
Capital outlay	131,039	-	131,039	8,783
Total expenditures	139,297	34,265	105,032	18,591
Excess (deficiency) of revenues over expenditures	(105,137)	(791)	104,346	28,167
Fund balance:				
Beginning of year	105,180	111,117	5,937	82,950
End of year	$ 43	$ 110,326	$ 110,283	$ 111,117

LINCOLN COUNTY, NEVADA
NONMAJOR FORFEITURE SPECIAL REVENUE FUND
COMPARATIVE BALANCE SHEETS
June 30, 2020 and 2019

	2020	2019
ASSETS		
Pooled cash and investments	$ 48,619	$ 51,215
Interest receivable	65	120
Total assets	$ 48,684	$ 51,335
LIABILITIES		
Accounts payable	$ 2,568	$ -
FUND BALANCE		
Restricted	46,116	51,335
Total liabilities and fund balance	$ 48,684	$ 51,335

LINCOLN COUNTY, NEVADA
NONMAJOR FORFEITURE SPECIAL REVENUE FUND
SCHEDULE OF REVENUES, EXPENDITURES, AND CHANGES
IN FUND BALANCE - BUDGET (GAAP BASIS) AND ACTUAL
Year Ended June 30, 2020
(With Comparative Actual Amounts for Year Ended June 30, 2019)

	2020		Variance-Positive	2019
	Budget	Actual	(Negative)	Actual
Revenues:				
Intergovernmental:				
Grant	$ -	$ 27,052	$ 27,052	$ -
Fines and forfeitures:				
Other	30,000	-	(30,000)	-
Miscellaneous:				
Investment income	-	1,062	1,062	1,061
Rent	-	1,197	1,197	-
Total miscellaneous	-	2,259	2,259	1,061
Total revenues	30,000	29,311	(689)	1,061
Expenditures:				
Current:				
Public safety:				
Services and supplies	45,000	34,530	10,470	8,246
Excess (deficiency) of revenues over expenditures	(15,000)	(5,219)	9,781	(7,185)
Fund balance:				
Beginning of year	22,382	51,335	28,953	58,520
End of year	$ 7,382	$ 46,116	$ 38,734	$ 51,335

LINCOLN COUNTY, NEVADA
NONMAJOR RECORDER TECHNOLOGY SPECIAL REVENUE FUND
COMPARATIVE BALANCE SHEETS
June 30, 2020 and 2019

	2020	2019
ASSETS		
Pooled cash and investments	$ 32,586	$ 23,444
Interest receivable	50	46
Total assets	$ 32,636	$ 23,490
LIABILITIES		
Accounts payable	$ -	$ -
FUND BALANCE		
Restricted	32,636	23,490
Total liabilities and fund balance	$ 32,636	$ 23,490

LINCOLN COUNTY, NEVADA
NONMAJOR RECORDER TECHNOLOGY SPECIAL REVENUE FUND
SCHEDULE OF REVENUES, EXPENDITURES, AND CHANGES
IN FUND BALANCE - BUDGET (GAAP BASIS) AND ACTUAL
Year Ended June 30, 2020
(With Comparative Actual Amounts for Year Ended June 30, 2019)

	2020 Budget	2020 Actual	Variance-Positive (Negative)	2019 Actual
Revenues:				
Charges for services:				
User fees	$ 6,000	$ 8,325	$ 2,325	$ 7,065
Miscellaneous:				
Investment income	-	821	821	402
Total revenues	6,000	9,146	3,146	7,467
Expenditures:				
Current:				
General government:				
Services and supplies	20,000	-	20,000	-
Excess (deficiency) of revenues over expenditures	(14,000)	9,146	23,146	7,467
Fund balance:				
Beginning of year	14,000	23,490	9,490	16,023
End of year	$ -	$ 32,636	$ 32,636	$ 23,490

LINCOLN COUNTY, NEVADA
NONMAJOR L.C. HOUSING AUTHORITY SPECIAL REVENUE FUND
COMPARATIVE BALANCE SHEETS
June 30, 2020 and 2019

	2020	2019
ASSETS		
Pooled cash and investments	$ 23,371	$ 20,496
Interest receivable	36	44
Total assets	$ 23,407	$ 20,540
LIABILITIES		
Accounts payable	$ 1,055	$ 521
Accrued payroll and benefits	148	205
Total liabilities	1,203	726
FUND BALANCE		
Restricted	22,204	19,814
Total liabilities and fund balance	$ 23,407	$ 20,540

LINCOLN COUNTY, NEVADA
NONMAJOR L. C. HOUSING AUTHORITY SPECIAL REVENUE FUND
SCHEDULE OF REVENUES, EXPENDITURES, AND CHANGES
IN FUND BALANCE - BUDGET (GAAP BASIS) AND ACTUAL
Year Ended June 30, 2020
(With Comparative Actual Amounts for Year Ended June 30, 2019)

	2020		Variance - Positive	2019
	Budget	Actual	(Negative)	Actual
Revenues:				
Miscellaneous:				
Rent	$ 35,000	$ 34,982	$ (18)	$ 33,630
Investment income	-	589	589	389
Total revenues	35,000	35,571	571	34,019
Expenditures:				
Current:				
Community support:				
Salaries and wages	18,745	21,209	(2,464)	24,555
Employee benefits	1,957	2,563	(606)	2,986
Services and supplies	14,309	9,409	4,900	18,527
Capital outlay	10,000	-	10,000	-
Total expenditures	45,011	33,181	11,830	46,068
Excess (deficiency) of revenues over expenditures	(10,011)	2,390	12,401	(12,049)
Fund balance:				
Beginning of year	18,736	19,814	1,078	31,863
End of year	$ 8,725	$ 22,204	$ 13,479	$ 19,814

LINCOLN COUNTY, NEVADA
NONMAJOR ALAMO CLINIC SPECIAL REVENUE FUND
COMPARATIVE BALANCE SHEETS
June 30, 2020 and 2019

	2020	2019
ASSETS		
Pooled cash and investments	$ 378	$ 10,982
Taxes receivable	1,321	1,455
Total assets	$ 1,699	$ 12,437
LIABILITIES		
Accounts payable	$ 378	$ 10,787
DEFERRED INFLOWS OF RESOURCES		
Unavailable revenue - property taxes	1,154	1,154
FUND BALANCE		
Restricted	167	496
Total liabilities, deferred inflows of resources, and fund balance	$ 1,699	$ 12,437

LINCOLN COUNTY, NEVADA
NONMAJOR ALAMO CLINIC SPECIAL REVENUE FUND
SCHEDULE OF REVENUES, EXPENDITURES, AND CHANGES IN FUND BALANCE -BUDGET (GAAP BASIS) AND ACTUAL
Year Ended June 30, 2020
(With Comparative Actual Amounts for Year Ended June 30, 2019)

	2020 Budget	2020 Actual	Variance - Positive (Negative)	2019 Actual
Revenues:				
Taxes:				
Property taxes	$ 101,396	$ 98,959	$ (2,437)	$ 97,575
Intergovernmental:				
Fish and wildlife	-	93	93	107
Total revenues	101,396	99,052	(2,344)	97,682
Expenditures:				
Current:				
Health:				
Services and supplies	101,396	99,381	2,015	97,439
Excess (deficiency) of revenues over expenditures	-	(329)	(329)	243
Fund balance:				
Beginning of year	253	496	243	253
End of year	$ 253	$ 167	$ (86)	$ 496

LINCOLN COUNTY, NEVADA
NONMAJOR FAIR BOARD SPECIAL REVENUE FUND
COMPARATIVE BALANCE SHEETS
June 30, 2020 and 2019

	2020	2019
ASSETS		
Pooled cash and investments	$ 24,186	$ 19,773
Interest receivable	23	25
Total assets	$ 24,209	$ 19,798
LIABILITIES		
Accounts payable	$ 488	$ -
FUND BALANCE		
Restricted	23,721	19,798
Total liabilities and fund balance	$ 24,209	$ 19,798

LINCOLN COUNTY, NEVADA
NONMAJOR FAIR BOARD SPECIAL REVENUE FUND
SCHEDULE OF REVENUES, EXPENDITURES, AND CHANGES
IN FUND BALANCE - BUDGET (GAAP BASIS) AND ACTUAL
Year Ended June 30, 2020
(With Comparative Actual Amounts for Year Ended June 30, 2019)

	2020 Budget	2020 Actual	Variance - Positive (Negative)	2019 Actual
Revenues:				
Miscellaneous:				
Investment income	$ -	$ 380	$ 380	$ 216
Fees	33,697	29,571	(4,126)	31,818
Donations	-	3,795	3,795	100
Total revenues	33,697	33,746	49	32,134
Expenditures:				
Current:				
Culture and recreation:				
Parks:				
Services and supplies	53,815	39,823	13,992	42,454
Excess (deficiency) of revenues over expenditures	(20,118)	(6,077)	14,041	(10,320)
Other financing sources (uses):				
Operating transfers in	10,000	10,000	-	10,000
Net change in fund balance	(10,118)	3,923	14,041	(320)
Fund balance:				
Beginning of year	10,118	19,798	9,680	20,118
End of year	$ -	$ 23,721	$ 23,721	$ 19,798

LINCOLN COUNTY, NEVADA
NONMAJOR MULTI-SPECIES HABITAT CONSERVATION SPECIAL REVENUE FUND
COMPARATIVE BALANCE SHEETS
June 30, 2020 and 2019

	2020	2019
ASSETS		
Pooled cash and investments	$ 13,837	$ 16,909
Interest receivable	24	40
Total assets	$ 13,861	$ 16,949
LIABILITIES		
Accounts payable	$ 621	$ 621
Unearned revenue	13,240	16,328
Total liabilities	13,861	16,949
FUND BALANCE		
Restricted	-	-
Total liabilities and fund balance	$ 13,861	$ 16,949

LINCOLN COUNTY, NEVADA
NONMAJOR MULTI-SPECIES HABITAT CONSERVATION SPECIAL REVENUE FUND
SCHEDULE OF REVENUES, EXPENDITURES, AND CHANGES
IN FUND BALANCE - BUDGET (GAAP BASIS) AND ACTUAL
Year Ended June 30, 2020
(With Comparative Actual Amounts for Year Ended June 30, 2019)

	2020 Budget	2020 Actual	Variance - Positive (Negative)	2019 Actual
Revenues:				
Intergovernmental:				
Grants	$ 18,090	$ 3,087	$ (15,003)	$ 4,818
Miscellaneous:				
Investment income	-	393	393	351
Total revenues	18,090	3,480	(14,610)	5,169
Expenditures:				
Current:				
General government:				
Services and supplies	18,090	3,480	14,610	5,169
Excess (deficiency) of revenues over expenditures	-	-	-	-
Fund balance:				
Beginning of year	-	-	-	-
End of year	$ -	$ -	$ -	$ -

LINCOLN COUNTY, NEVADA
NONMAJOR MULTI-SPECIES HABITAT CONSERVATION SEC. 7 SPECIAL REVENUE FUND
COMPARATIVE BALANCE SHEETS
June 30, 2020 and 2019

	2020	2019
ASSETS		
Pooled cash and investments	$ 902,339	$ 877,978
Interest receivable	1,461	1,930
Total assets	$ 903,800	$ 879,908
LIABILITIES		
Accounts payable	$ -	$ -
FUND BALANCE		
Restricted	903,800	879,908
Total liabilities and fund balance	$ 903,800	$ 879,908

LINCOLN COUNTY, NEVADA
NONMAJOR MULTI-SPECIES HABITAT CONSERVATION SEC. 7 SPECIAL REVENUE FUND
SCHEDULE OF REVENUES, EXPENDITURES, AND CHANGES
IN FUND BALANCE - BUDGET (GAAP BASIS) AND ACTUAL
Year Ended June 30, 2020
(With Comparative Actual Amounts for Year Ended June 30, 2019)

	2020 Budget	2020 Actual	Variance - Positive (Negative)	2019 Actual
Revenues:				
Miscellaneous:				
Investment income	$ 5,000	$ 23,892	$ 18,892	$ 17,027
Expenditures:				
Current:				
General government:				
Services and supplies	869,381	-	869,381	-
Excess (deficiency) of revenues over expenditures	(864,381)	23,892	888,273	17,027
Fund balance:				
Beginning of year	864,381	879,908	15,527	862,881
End of year	$ -	$ 903,800	$ 903,800	$ 879,908

LINCOLN COUNTY, NEVADA
NONMAJOR YOUTH ACTIVITIES COUNSEL SPECIAL REVENUE FUND
COMPARATIVE BALANCE SHEETS
June 30, 2020 and 2019

	2020	2019
ASSETS		
Pooled cash and investments	$ 6,007	$ 6,007
LIABILITIES		
Accrued payroll and benefits	$ -	$ -
FUND BALANCE		
Restricted	6,007	6,007
Total liabilities and fund balance	$ 6,007	$ 6,007

LINCOLN COUNTY, NEVADA
NONMAJOR YOUTH ACTIVITIES COUNSEL SPECIAL REVENUE FUND
SCHEDULE OF REVENUES, EXPENDITURES, AND CHANGES
IN FUND BALANCE - BUDGET (GAAP BASIS) AND ACTUAL
Year Ended June 30, 2020
(With Comparative Actual Amounts for Year Ended June 30, 2019)

	2020		Variance - Positive	2019
	Budget	Actual	(Negative)	Actual
Revenues:				
Miscellaneous:	$ -	$ -	$ -	$ -
Expenditures:				
Current:				
Community support:				
Services and supplies	6,007	-	6,007	-
Excess (deficiency) of revenues over expenditures	(6,007)	-	6,007	-
Fund balance:				
Beginning of year	6,007	6,007	-	6,007
End of year	$ -	$ 6,007	$ 6,007	$ 6,007

LINCOLN COUNTY, NEVADA
NONMAJOR GENETIC MARKER TESTING SPECIAL REVENUE FUND
COMPARATIVE BALANCE SHEETS
June 30, 2020 and 2019

	2020	2019
ASSETS		
Pooled cash and investments	$ 1,370	$ 4,285
LIABILITIES		
Accounts payable	$ 1,370	$ 4,285
FUND BALANCE		
Restricted	-	-
Total liabilities and fund balance	$ 1,370	$ 4,285

LINCOLN COUNTY, NEVADA
NONMAJOR GENETIC MARKER TESTING SPECIAL REVENUE FUND
SCHEDULE OF REVENUES, EXPENDITURES, AND CHANGES
IN FUND BALANCE - BUDGET (GAAP BASIS) AND ACTUAL
Year Ended June 30, 2020
(With Comparative Actual Amounts for Year Ended June 30, 2019)

	2020		Variance - Positive	2019
	Budget	Actual	(Negative)	Actual
Revenues:				
Charges for services:				
Other	$ 20,000	$ 10,372	$ (9,628)	$ 15,348
Expenditures:				
Current:				
General government:				
Services and supplies	20,000	10,372	9,628	16,690
Excess (deficiency) of revenues over expenditures	-	-	-	(1,342)
Fund balance:				
Beginning of year	-	-	-	1,342
End of year	$ -	$ -	$ -	$ -

LINCOLN COUNTY, NEVADA
NONMAJOR PUBLIC IMPROVEMENT SPECIAL REVENUE FUND
COMPARATIVE BALANCE SHEETS
June 30, 2020 and 2019

	2020	2019
ASSETS		
Pooled cash and investments	$ 149,107	$ 145,081
Interest receivable	241	319
Total assets	$ 149,348	$ 145,400
FUND BALANCE		
Restricted	$ 149,348	$ 145,400

LINCOLN COUNTY, NEVADA
NONMAJOR PUBLIC IMPROVEMENT SPECIAL REVENUE FUND
SCHEDULE OF REVENUES, EXPENDITURES, AND CHANGES
IN FUND BALANCE - BUDGET (GAAP BASIS) AND ACTUAL
Year Ended June 30, 2020
(With Comparative Actual Amounts for Year Ended June 30, 2019)

	2020		Variance - Positive	2019
	Budget	Actual	(Negative)	Actual
Revenues:				
Miscellaneous:				
Interest	$ -	$ 3,948	$ 3,948	$ 2,811
Expenditures:				
Current:				
Public works:				
Services and supplies	142,589	-	142,589	-
Excess (deficiency) of revenues over expenditures	(142,589)	3,948	146,537	2,811
Fund balance:				
Beginning of year	142,589	145,400	2,811	142,589
End of year	$ -	$ 149,348	$ 149,348	$ 145,400

LINCOLN COUNTY, NEVADA
NONMAJOR AIRPORT SPECIAL REVENUE FUND
COMPARATIVE BALANCE SHEETS
June 30, 2020 and 2019

	2020	2019
ASSETS		
Pooled cash and investments	$ 23,165	$ 1,036
Due from others	9,898	-
Inventory	8,091	-
Total assets	$ 41,154	$ 1,036
LIABILITIES		
Accounts payable	$ 9,608	$ 514
Accrued payroll and benefits	73	-
Total liabilities	9,681	514
FUND BALANCE		
Nonspendable	8,091	-
Committed	23,382	522
Total fund balance	31,473	522
Total liabilities and fund balance	$ 41,154	$ 1,036

LINCOLN COUNTY, NEVADA
NONMAJOR AIRPORT SPECIAL REVENUE FUND
SCHEDULE OF REVENUES, EXPENDITURES, AND CHANGES IN FUND BALANCE - BUDGET (GAAP BASIS) AND ACTUAL
Year Ended June 30, 2020
(With Comparative Actual Amounts for Year Ended June 30, 2019)

	2020 Budget	2020 Actual	Variance - Positive (Negative)	2019 Actual
Revenues:				
Charges for services:				
Airport fees	$ 18,500	$ 40,853	$ 22,353	$ 19,140
Miscellaneous:				
Rents	3,000	20,400	17,400	7,600
Other	10,000	-	(10,000)	-
Total miscellaneous	13,000	20,400	7,400	7,600
Total revenues	31,500	61,253	29,753	26,740
Expenditures:				
Current:				
Public works:				
Employee benefits	450	400	50	423
Services and supplies	28,900	29,902	(1,002)	25,526
Total expenditures	29,350	30,302	(952)	25,949
Excess (deficiency) of revenues over expenditures	2,150	30,951	28,801	791
Fund balance:				
Beginning of year	-	522	522	(269)
End of year	$ 2,150	$ 31,473	$ 29,323	$ 522

LINCOLN COUNTY, NEVADA
NONMAJOR PANACA TOWN BUILDING SPECIAL REVENUE FUND
COMPARATIVE BALANCE SHEETS
June 30, 2020 and 2019

	2020	2019
ASSETS		
Pooled cash and investments	$ 57,520	$ 56,265
Interest receivable	89	116
Total assets	$ 57,609	$ 56,381
LIABILITIES		
Accounts payable	$ -	$ -
FUND BALANCE		
Committed	57,609	56,381
Total liabilities and fund balance	$ 57,609	$ 56,381

LINCOLN COUNTY, NEVADA
NONMAJOR PANACA TOWN BUILDING SPECIAL REVENUE FUND
SCHEDULE OF REVENUES, EXPENDITURES, AND CHANGES
IN FUND BALANCE - BUDGET (GAAP BASIS) AND ACTUAL
Year Ended June 30, 2020
(With Comparative Actual Amounts for Year Ended June 30, 2019)

	2020 Budget	2020 Actual	Variance - Positive (Negative)	2019 Actual
Revenues:				
Miscellaneous:				
Rent	$ 10,500	$ 10,569	$ 69	$ 10,569
Investment income	-	1,459	1,459	1,024
Total revenues	10,500	12,028	1,528	11,593
Expenditures:				
Current:				
General government:				
Capital outlay	41,788	10,800	30,988	-
Excess (deficiency) of revenues over expenditures	(31,288)	1,228	32,516	11,593
Fund balance:				
Beginning of year	31,288	56,381	25,093	44,788
End of year	$ -	$ 57,609	$ 57,609	$ 56,381

LINCOLN COUNTY, NEVADA
NONMAJOR COURT FACILITY FEES SPECIAL REVENUE FUND
COMPARATIVE BALANCE SHEETS
June 30, 2020 and 2019

	2020	2019
ASSETS		
Pooled cash and investments	$ 135,935	$ 111,466
Interest receivable	224	214
Total assets	$ 136,159	$ 111,680
LIABILITIES		
Accounts payable	$ 45,191	$ -
FUND BALANCE		
Restricted	90,968	111,680
Total liabilities and fund balance	$ 136,159	$ 111,680

LINCOLN COUNTY, NEVADA
NONMAJOR COURT FACILITY FEES SPECIAL REVENUE FUND
SCHEDULE OF REVENUES, EXPENDITURES, AND CHANGES
IN FUND BALANCE - BUDGET (GAAP BASIS) AND ACTUAL
Year Ended June 30, 2020
(With Comparative Actual Amounts for Year Ended June 30, 2019)

	2020		Variance - Positive	2019
	Budget	Actual	(Negative)	Actual
Revenues:				
Charges for services:				
Other	$ 45,000	$ 33,511	$ (11,489)	$ 49,189
Miscellaneous:				
Investment income	-	3,653	3,653	1,882
Total revenues	45,000	37,164	(7,836)	51,071
Expenditures:				
Current:				
Judicial:				
Service and supplies	-	-	-	1,231
Capital outlay	63,040	57,876	5,164	7,200
Total expenditures	63,040	57,876	5,164	8,431
Excess (deficiency) of revenues over expenditures	(18,040)	(20,712)	(2,672)	42,640
Fund balance:				
Beginning of year	18,040	111,680	93,640	69,040
End of year	$ -	$ 90,968	$ 90,968	$ 111,680

LINCOLN COUNTY, NEVADA
NONMAJOR TRI-COUNTY WEED CONTROL SPECIAL REVENUE FUND
COMPARATIVE BALANCE SHEETS
June 30, 2020 and 2019

	2020	2019
ASSETS		
Pooled cash and investments	$ -	$ 249,082
Interest receivable	-	646
Total assets	$ -	$ 249,728
LIABILITIES		
Accounts payable	$ -	$ 56,390
Accrued payroll and benefits	-	21,339
Total liabilities	-	77,729
FUND BALANCE		
Restricted	-	171,999
Total liabilities and fund balance	$ -	$ 249,728

LINCOLN COUNTY, NEVADA
NONMAJOR TRI-COUNTY WEED CONTROL SPECIAL REVENUE FUND
SCHEDULE OF REVENUES, EXPENDITURES, AND CHANGES
IN FUND BALANCE - BUDGET (GAAP BASIS) AND ACTUAL
Year Ended June 30, 2020
(With Comparative Actual Amounts for Year Ended June 30, 2019)

	2020		Variance - Positive	2019
	Budget	Actual	(Negative)	Actual
Revenues:				
Charges for services:				
Weed control	$ 1,100,000	$ 327,615	$ (772,385)	$ 843,872
Miscellaneous:				
Investment income	400	879	479	5,696
Total revenues	1,100,400	328,494	(771,906)	849,568
Expenditures:				
Current:				
General government:				
Salaries and wages	409,150	85,251	323,899	284,065
Employee benefits	150,387	25,120	125,267	89,861
Services and supplies	503,564	76,269	427,295	494,481
Capital outlay	150,000	-	150,000	-
Total expenditures	1,213,101	186,640	1,026,461	868,407
Excess (deficiency) of revenues over expenditures	(112,701)	141,854	254,555	(18,839)
Other financing sources (uses):				
Disposal	-	(313,853)	(313,853)	-
Net change in fund balance	(112,701)	(171,999)	(59,298)	(18,839)
Fund balance:				
Beginning of year	112,701	171,999	59,298	190,838
End of year	$ -	$ -	$ -	$ 171,999

LINCOLN COUNTY, NEVADA
NONMAJOR LINCOLN COUNTY LAND ACT
GENERAL SPECIAL REVENUE FUND
COMPARATIVE BALANCE SHEETS
June 30, 2020 and 2019

	2020	2019
ASSETS		
Pooled cash and investments	$ 6,879	$ 6,693
Interest receivable	11	15
Total assets	$ 6,890	$ 6,708
FUND BALANCE		
Committed	$ 6,890	$ 6,708

LINCOLN COUNTY, NEVADA
NONMAJOR LINCOLN COUNTY LAND ACT
GENERAL SPECIAL REVENUE FUND
SCHEDULE OF REVENUES, EXPENDITURES, AND CHANGES IN FUND BALANCE - BUDGET (GAAP BASIS) AND ACTUAL
Year Ended June 30, 2020
(With Comparative Actual Amounts for Year Ended June 30, 2019)

	2020			
	Budget	Actual	Variance - Positive (Negative)	2019 Actual
Revenues:				
Miscellaneous:				
Investment income	$ -	$ 182	$ 182	$ 133
Expenditures:				
Current:				
General government:				
Services and supplies	6,575	-	6,575	-
Excess (deficiency) of revenues over expenditures	(6,575)	182	6,757	133
Fund balance:				
Beginning of year	6,575	6,708	133	6,575
End of year	$ -	$ 6,890	$ 6,890	$ 6,708

LINCOLN COUNTY, NEVADA
NONMAJOR LINCOLN COUNTY LAND ACT
PLANNING AND DEVELOPMENT SPECIAL REVENUE FUND
COMPARATIVE BALANCE SHEETS
June 30, 2020 and 2019

	2020	2019
ASSETS		
Pooled cash and investments	$ 700	$ 681
Interest receivable	1	2
Total assets	$ 701	$ 683
LIABILITIES		
Accounts payable	$ -	$ -
FUND BALANCE		
Committed	701	683
Total liabilities and fund balance	$ 701	$ 683

LINCOLN COUNTY, NEVADA
NONMAJOR LINCOLN COUNTY LAND ACT
PLANNING AND DEVELOPMENT SPECIAL REVENUE FUND
SCHEDULE OF REVENUES, EXPENDITURES, AND CHANGES
IN FUND BALANCE - BUDGET (GAAP BASIS) AND ACTUAL
Year Ended June 30, 2020
(With Comparative Actual Amounts for Year Ended June 30, 2019)

	2020			
	Budget	Actual	Variance - Positive (Negative)	2019 Actual
Revenues:				
Miscellaneous:				
Investment income	$ 100	$ 18	$ (82)	$ 15
Expenditures:				
Current:				
General government:				
Services and supplies	868	-	868	-
Net change in fund balance	(768)	18	786	15
Fund balance:				
Beginning of year	768	683	(85)	668
End of year	$ -	$ 701	$ 701	$ 683

LINCOLN COUNTY, NEVADA
NONMAJOR LINCOLN COUNTY LAND ACT
EDUCATION SPECIAL REVENUE FUND
COMPARATIVE BALANCE SHEETS
June 30, 2020 and 2019

	2020	2019
ASSETS		
Pooled cash and investments	$ 130,510	$ 126,986
Interest receivable	211	279
Total assets	$ 130,721	$ 127,265
LIABILITIES		
Accounts payable	$ -	$ -
FUND BALANCE		
Committed	130,721	127,265
Total liabilities and fund balance	$ 130,721	$ 127,265

LINCOLN COUNTY, NEVADA
NONMAJOR LINCOLN COUNTY LAND ACT
EDUCATION SPECIAL REVENUE FUND
SCHEDULE OF REVENUES, EXPENDITURES, AND CHANGES
IN FUND BALANCE - BUDGET (GAAP BASIS) AND ACTUAL
Year Ended June 30, 2020
(With Comparative Actual Amounts for Year Ended June 30, 2019)

	2020			
	Budget	Actual	Variance - Positive (Negative)	2019 Actual
Revenues:				
Miscellaneous:				
Investment income	$ -	$ 3,456	$ 3,456	$ 2,464
Expenditures:				
Current:				
General government:				
Services and supplies	12,500	-	12,500	-
Excess (deficiency) of revenues over expenditures	(12,500)	3,456	15,956	2,464
Fund balance:				
Beginning of year	124,801	127,265	2,464	124,801
End of year	$ 112,301	$ 130,721	$ 18,420	$ 127,265

LINCOLN COUNTY, NEVADA
NONMAJOR LINCOLN COUNTY LAND ACT
GRANT MATCH SPECIAL REVENUE FUND
COMPARATIVE BALANCE SHEETS
June 30, 2020 and 2019

	2020	2019
ASSETS		
Pooled cash and investments	$ -	$ 151
FUND BALANCE		
Committed	$ -	$ 151

LINCOLN COUNTY, NEVADA
NONMAJOR LINCOLN COUNTY LAND ACT
GRANT MATCH SPECIAL REVENUE FUND
SCHEDULE OF REVENUES, EXPENDITURES, AND CHANGES
IN FUND BALANCE - BUDGET (GAAP BASIS) AND ACTUAL
Year Ended June 30, 2020
(With Comparative Actual Amounts for Year Ended June 30, 2019)

	2020			
	Budget	Actual	Variance - Positive (Negative)	2019 Actual
Revenues:				
Miscellaneous:				
Investment income	$ -	$ -	$ -	$ -
Expenditures:				
Current:				
General government:				
Services and supplies	-	-	-	-
Excess (deficiency) of revenues over expenditures	-	-	-	-
Other financing sources (uses):				
Operating transfers out	(151)	(151)	-	-
Net change in fund balance	(151)	(151)	-	-
Fund balance:				
Beginning of year	151	151	-	151
End of year	$ -	$ -	$ -	$ 151

LINCOLN COUNTY, NEVADA
NONMAJOR LINCOLN COUNTY WATER
GENERAL SPECIAL REVENUE FUND
COMPARATIVE BALANCE SHEETS
June 30, 2020 and 2019

	2020	2019
ASSETS		
Pooled cash and investments	$ 633	$ 616
Interest receivable	1	2
Total assets	$ 634	$ 618
LIABILITIES		
Accounts payable	$ -	$ -
FUND BALANCE		
Committed	634	618
Total liabilities and fund balance	$ 634	$ 618

LINCOLN COUNTY, NEVADA
NONMAJOR LINCOLN COUNTY WATER
GENERAL SPECIAL REVENUE FUND
SCHEDULE OF REVENUES, EXPENDITURES, AND CHANGES
IN FUND BALANCE - BUDGET (GAAP BASIS) AND ACTUAL
Year Ended June 30, 2020
(With Comparative Actual Amounts for Year Ended June 30, 2019)

	2020		Variance - Positive	2019
	Budget	Actual	(Negative)	Actual
Revenues:				
Miscellaneous:				
Investment income	$ -	$ 16	$ 16	$ 10
Expenditures:				
Current:				
General government:				
Services and supplies	-	-	-	-
Net change in fund balance	-	16	16	10
Fund balance:				
Beginning of year	608	618	10	608
End of year	$ 608	$ 634	$ 26	$ 618

LINCOLN COUNTY, NEVADA
NONMAJOR LINCOLN COUNTY WATER
SPECIAL PROJECTS SPECIAL REVENUE FUND
COMPARATIVE BALANCE SHEETS
June 30, 2020 and 2019

	2020	2019
ASSETS		
Pooled cash and investments	$ 8,783	$ 8,546
Interest receivable	14	19
Total assets	$ 8,797	$ 8,565
FUND BALANCE		
Committed	$ 8,797	$ 8,565

LINCOLN COUNTY, NEVADA
NONMAJOR LINCOLN COUNTY WATER
SPECIAL PROJECTS SPECIAL REVENUE FUND
SCHEDULE OF REVENUES, EXPENDITURES, AND CHANGES
IN FUND BALANCE - BUDGET (GAAP BASIS) AND ACTUAL
Year Ended June 30, 2020
(With Comparative Actual Amounts for Year Ended June 30, 2019)

	2020			
	Budget	Actual	Variance - Positive (Negative)	2019 Actual
Revenues:				
Miscellaneous:				
Investment income	$ -	$ 232	$ 232	$ 167
Expenditures:				
Current:				
General government:				
Services and supplies	8,398	-	8,398	-
Excess (deficiency) of revenues over expenditures	(8,398)	232	8,630	167
Fund balance:				
Beginning of year	8,398	8,565	167	8,398
End of year	$ -	$ 8,797	$ 8,797	$ 8,565

LINCOLN COUNTY, NEVADA
NONMAJOR LINCOLN COUNTY WATER
PLANNING AND DEVELOPMENT SPECIAL REVENUE FUND
COMPARATIVE BALANCE SHEETS
June 30, 2020 and 2019

	2020	2019
ASSETS		
Pooled cash and investments	$ 87,123	$ 84,771
Interest receivable	141	186
Total assets	$ 87,264	$ 84,957
FUND BALANCE		
Committed	$ 87,264	$ 84,957

LINCOLN COUNTY, NEVADA
NONMAJOR LINCOLN COUNTY WATER
PLANNING AND DEVELOPMENT SPECIAL REVENUE FUND
SCHEDULE OF REVENUES, EXPENDITURES, AND CHANGES
IN FUND BALANCE - BUDGET (GAAP BASIS) AND ACTUAL
Year Ended June 30, 2020
(With Comparative Actual Amounts for Year Ended June 30, 2019)

	2020			
	Budget	Actual	Variance - Positive (Negative)	2019 Actual
Revenues:				
Miscellaneous:				
Investment income	$ 50	$ 2,307	$ 2,257	$ 1,643
Expenditures:				
Current:				
General government:				
Services and supplies	83,414	-	83,414	-
Net change in fund balance	(83,364)	2,307	85,671	1,643
Fund balance:				
Beginning of year	83,364	84,957	1,593	83,314
End of year	$ -	$ 87,264	$ 87,264	$ 84,957

LINCOLN COUNTY, NEVADA
NONMAJOR LINCOLN COUNTY WATER SPECIAL USE SPECIAL REVENUE FUND
COMPARATIVE BALANCE SHEETS
June 30, 2020 and 2019

	2020	2019
ASSETS		
Pooled cash and investments	$ 1,239,861	$ 1,196,429
Interest receivable	2,006	2,629
Interfund receivable	170,000	180,000
Total assets	$ 1,411,867	$ 1,379,058
FUND BALANCE		
Committed	$ 1,411,867	$ 1,379,058

LINCOLN COUNTY, NEVADA
NONMAJOR LINCOLN COUNTY WATER SPECIAL USE SPECIAL REVENUE FUND
SCHEDULE OF REVENUES, EXPENDITURES, AND CHANGES
IN FUND BALANCE - BUDGET (GAAP BASIS) AND ACTUAL
Year Ended June 30, 2020
(With Comparative Actual Amounts for Year Ended June 30, 2019)

	2020		Variance - Positive	2019
	Budget	Actual	(Negative)	Actual
Revenues:				
Miscellaneous:				
Investment income	$ 500	$ 32,809	$ 32,309	$ 23,192
Expenditures:				
Current:				
General government:				
Services and supplies	172,548	-	172,548	-
Excess (deficiency) of revenues over expenditures	(172,048)	32,809	204,857	23,192
Fund balance:				
Beginning of year	1,356,366	1,379,058	22,692	1,355,866
End of year	$ 1,184,318	$ 1,411,867	$ 227,549	$ 1,379,058

LINCOLN COUNTY, NEVADA
NONMAJOR LINCOLN COUNTY WATER
GRANT MATCH SPECIAL REVENUE FUND
COMPARATIVE BALANCE SHEETS
June 30, 2020 and 2019

	2020	2019
ASSETS		
Pooled cash and investments	$ 87,057	$ 84,707
Interest receivable	141	186
Total assets	$ 87,198	$ 84,893
FUND BALANCE		
Committed	$ 87,198	$ 84,893

LINCOLN COUNTY, NEVADA
NONMAJOR LINCOLN COUNTY WATER
GRANT MATCH SPECIAL REVENUE FUND
SCHEDULE OF REVENUES, EXPENDITURES, AND CHANGES
IN FUND BALANCE - BUDGET (GAAP BASIS) AND ACTUAL
Year Ended June 30, 2020
(With Comparative Actual Amounts for Year Ended June 30, 2019)

	2020 Budget	2020 Actual	Variance - Positive (Negative)	2019 Actual
Revenues:				
Miscellaneous:				
Investment income	$ 150	$ 2,305	$ 2,155	$ 1,640
Expenditures:				
Current:				
General government:				
Services and supplies	83,553	-	83,553	-
Excess (deficiency) of revenues over expenditures	(83,403)	2,305	85,708	1,640
Fund balance:				
Beginning of year	83,403	84,893	1,490	83,253
End of year	$ -	$ 87,198	$ 87,198	$ 84,893

LINCOLN COUNTY, NEVADA
NONMAJOR LINCOLN COUNTY WATER DISTRICT
GENERAL SPECIAL REVENUE FUND
COMPARATIVE BALANCE SHEETS
June 30, 2020 and 2019

	2020	2019
ASSETS		
Pooled cash and investments	$ 326,139	$ 295,924
Interest receivable	1,067	1,062
Prepaid expenses	1,554	-
Total assets	$ 328,760	$ 296,986
LIABILITIES		
Accounts payable	$ 5,361	$ 8,651
Accrued payroll and benefits	6,766	6,715
Total liabilities	12,127	15,366
FUND BALANCE		
Committed	316,633	281,620
Total liabilities and fund balance	$ 328,760	$ 296,986

LINCOLN COUNTY, NEVADA
NONMAJOR LINCOLN COUNTY WATER DISTRICT
GENERAL SPECIAL REVENUE FUND
SCHEDULE OF REVENUES, EXPENDITURES, AND CHANGES IN FUND BALANCE - BUDGET (GAAP BASIS) AND ACTUAL
Year Ended June 30, 2020
(With Comparative Actual Amounts for Year Ended June 30, 2019)

	2020 Budget	2020 Actual	Variance - Positive (Negative)	2019 Actual
Revenues:				
Miscellaneous:				
Rent	$ -	$ 500	$ 500	$ 500
Investment income	-	12,338	12,338	8,693
Total revenues	-	12,838	12,838	9,193
Expenditures:				
Current:				
General government:				
Salaries and wages	90,000	85,070	4,930	81,149
Employee benefits	37,000	37,902	(902)	34,570
Services and supplies	153,000	54,853	98,147	38,303
Total general government	280,000	177,825	102,175	154,022
Excess (deficiency) of revenues over expenditures	(280,000)	(164,987)	115,013	(144,829)
Other financing sources (uses):				
Operating transfers in	200,000	200,000	-	-
Net change in fund balance	(80,000)	35,013	115,013	(144,829)
Fund balance:				
Beginning of year	126,175	281,620	155,445	426,449
End of year	$ 46,175	$ 316,633	$ 270,458	$ 281,620

LINCOLN COUNTY, NEVADA
NONMAJOR LINCOLN COUNTY WATER DISTRICT
PLANNING & DEVELOPMENT SPECIAL REVENUE FUND
COMPARATIVE BALANCE SHEETS
June 30, 2020 and 2019

	2020	2019
ASSETS		
Pooled cash and investments	$ 948,216	$ 902,932
Interest receivable	3,920	3,901
Total assets	$ 952,136	$ 906,833
LIABILITIES		
Accounts payable	$ -	$ -
FUND BALANCE		
Committed	952,136	906,833
Total liabilities and fund balance	$ 952,136	$ 906,833

LINCOLN COUNTY, NEVADA
NONMAJOR LINCOLN COUNTY WATER DISTRICT
PLANNING & DEVELOPMENT SPECIAL REVENUE FUND
SCHEDULE OF REVENUES, EXPENDITURES, AND CHANGES IN FUND BALANCE - BUDGET (GAAP BASIS) AND ACTUAL
Year Ended June 30, 2020
(With Comparative Actual Amounts for Year Ended June 30, 2019)

	2020 Budget	2020 Actual	Variance - Positive (Negative)	2019 Actual
Revenues:				
Miscellaneous:				
Investment income	$ 10,000	$ 45,303	$ 35,303	$ 31,918
Expenditures:				
Current:				
General government:				
Services and supplies	896,783	-	896,783	1,868
Excess (deficiency) of revenues over expenditures	(886,783)	45,303	932,086	30,050
Fund balance:				
Beginning of year	886,783	906,833	20,050	876,783
End of year	$ -	$ 952,136	$ 952,136	$ 906,833

LINCOLN COUNTY, NEVADA
NONMAJOR LINCOLN COUNTY WATER DISTRICT
SPECIAL PROJECTS SPECIAL REVENUE FUND
COMPARATIVE BALANCE SHEETS
June 30, 2020 and 2019

	2020	2019
ASSETS		
Pooled cash and investments	$ 698,566	$ 666,069
Interest receivable	2,813	2,800
Prepaid expenses	32,000	40,000
Total assets	$ 733,379	$ 708,869
LIABILITIES		
Accounts payable	$ -	$ -
FUND BALANCE		
Nonspendable	32,000	40,000
Committed	701,379	668,869
Total fund balance	733,379	708,869
Total liabilities and fund balance	$ 733,379	$ 708,869

LINCOLN COUNTY, NEVADA
NONMAJOR LINCOLN COUNTY WATER DISTRICT
SPECIAL PROJECTS SPECIAL REVENUE FUND
SCHEDULE OF REVENUES, EXPENDITURES, AND CHANGES IN FUND BALANCE - BUDGET (GAAP BASIS) AND ACTUAL
Year Ended June 30, 2020
(With Comparative Actual Amounts for Year Ended June 30, 2019)

	2020 Budget	2020 Actual	Variance - Positive (Negative)	2019 Actual
Revenues:				
Miscellaneous:				
Other-capital improvement	$ 197,000	$ -	$ (197,000)	$ -
Investment income	6,000	32,510	26,510	22,911
Total revenues	203,000	32,510	(170,490)	22,911
Expenditures:				
Current:				
General government:				
Services and supplies	892,958	8,000	884,958	8,000
Excess (deficiency) of revenues over expenditures	(689,958)	24,510	714,468	14,911
Fund balance:				
Beginning of year	689,958	708,869	18,911	693,958
End of year	$ -	$ 733,379	$ 733,379	$ 708,869

LINCOLN COUNTY, NEVADA
NONMAJOR ASSESSOR TECHNOLOGY SPECIAL REVENUE FUND
COMPARATIVE BALANCE SHEETS
June 30, 2020 and 2019

	2020	2019
ASSETS		
Pooled cash and investments	$ 38,983	$ 44,771
LIABILITIES		
Accounts payable	$ -	$ 9,449
FUND BALANCE		
Restricted	38,983	35,322
Total liabilities and fund balance	$ 38,983	$ 44,771

LINCOLN COUNTY, NEVADA
NONMAJOR ASSESSOR TECHNOLOGY SPECIAL REVENUE FUND
SCHEDULE OF REVENUES, EXPENDITURES, AND CHANGES
IN FUND BALANCE - BUDGET (GAAP BASIS) AND ACTUAL
Year Ended June 30, 2020
(With Comparative Actual Amounts for Year Ended June 30, 2019)

	2020 Budget	2020 Actual	Variance - Positive (Negative)	2019 Actual
Revenues:				
Charges for services:				
Other	$ 18,000	$ 13,661	$ (4,339)	$ 13,336
Expenditures:				
Current:				
General government:				
Services and supplies	-	10,000	(10,000)	3,170
Capital outlay	54,000	-	54,000	19,449
Total general government	54,000	10,000	44,000	22,619
Excess (deficiency) of revenues over expenditures	(36,000)	3,661	39,661	(9,283)
Fund balance:				
Beginning of year	36,000	35,322	(678)	44,605
End of year	$ -	$ 38,983	$ 38,983	$ 35,322

LINCOLN COUNTY, NEVADA
NONMAJOR DISTRICT COURT TECHNOLOGY SPECIAL REVENUE FUND
COMPARATIVE BALANCE SHEETS
June 30, 2020 and 2019

	2020	2019
ASSETS		
Pooled cash and investments	$ 5,120	$ 5,120
FUND BALANCE		
Restricted	$ 5,120	$ 5,120

LINCOLN COUNTY, NEVADA
NONMAJOR DISTRICT COURT TECHNOLOGY SPECIAL REVENUE FUND
SCHEDULE OF REVENUES, EXPENDITURES, AND CHANGES
IN FUND BALANCE - BUDGET (GAAP BASIS) AND ACTUAL
Year Ended June 30, 2020
(With Comparative Actual Amounts for Year Ended June 30, 2019)

	2020		Variance - Positive	2019
	Budget	Actual	(Negative)	Actual
Revenues:				
Charges for services:	$ -	$ -	$ -	$ -
Expenditures:				
Current:				
Judicial:				
Services and supplies	5,120	-	5,120	-
Excess (deficiency) of revenues over expenditures	(5,120)	-	5,120	-
Fund balance:				
Beginning of year	5,120	5,120	-	5,120
End of year	$ -	$ 5,120	$ 5,120	$ 5,120

LINCOLN COUNTY, NEVADA
NONMAJOR DISTRICT COURT SPECIALTY COURT SPECIAL REVENUE FUND
COMPARATIVE BALANCE SHEETS
June 30, 2020 and 2019

	2020	2019
ASSETS		
Pooled cash and investments	$ 9,902	$ 2,850
LIABILITIES		
Accounts payable	$ 1,177	$ 2,761
FUND BALANCE		
Restricted	8,725	89
Total liabilities and fund balance	$ 9,902	$ 2,850

LINCOLN COUNTY, NEVADA
NONMAJOR DISTRICT COURT SPECIALTY COURT SPECIAL REVENUE FUND
SCHEDULE OF REVENUES, EXPENDITURES, AND CHANGES
IN FUND BALANCE - BUDGET (GAAP BASIS) AND ACTUAL
Year Ended June 30, 2020
(With Comparative Actual Amounts for Year Ended June 30, 2019)

	2020 Budget	2020 Actual	Variance-Positive (Negative)	2019 Actual
Revenues:				
Charges for services:				
Clerk fees	$ 20,463	$ 9,686	$ (10,777)	$ 12,219
Expenditures:				
Judicial:				
Services and supplies	30,000	16,050	13,950	22,106
Excess (deficiency) of revenues over expenditures	(9,537)	(6,364)	3,173	(9,887)
Other financing sources (uses):				
Transfers in	-	15,000	(15,000)	-
Net change in fund balance	(9,537)	8,636	18,173	(9,887)
Fund balance:				
Beginning of year	9,537	89	(9,448)	9,976
End of year	$ -	$ 8,725	$ 8,725	$ 89

LINCOLN COUNTY, NEVADA
NONMAJOR COURT SECURITY FEE SPECIAL REVENUE FUND
COMPARATIVE BALANCE SHEETS
June 30, 2020 and 2019

	2020	2019
ASSETS		
Pooled cash and investments	$ 12,436	$ 10,990
Interest receivable	20	23
Total assets	$ 12,456	$ 11,013
FUND BALANCE		
Restricted	$ 12,456	$ 11,013

LINCOLN COUNTY, NEVADA
NONMAJOR COURT SECURITY FEE SPECIAL REVENUE FUND
SCHEDULE OF REVENUES, EXPENDITURES, AND CHANGES
IN FUND BALANCE - BUDGET (GAAP BASIS) AND ACTUAL
Year Ended June 30, 2020
(With Comparative Actual Amounts for Year Ended June 30, 2019)

	2020			2019
	Budget	Actual	Variance-Positive (Negative)	
Revenues:				
Charges for services:				
Clerk fees	$ 700	$ 1,120	$ 420	$ 1,100
Miscellaneous:				
Investment income	-	323	323	206
Total revenues	700	1,443	743	1,306
Expenditures:				
Judicial:				
Services and supplies	11,107	-	11,107	-
Excess (deficiency) of revenues over expenditures	(10,407)	1,443	11,850	1,306
Fund balance:				
Beginning of year	10,407	11,013	606	9,707
End of year	$ -	$ 12,456	$ 12,456	$ 11,013

LINCOLN COUNTY, NEVADA
NONMAJOR DISTRICT COURT ENRICHMENT SPECIAL REVENUE FUND
COMPARATIVE BALANCE SHEETS
June 30, 2020 and 2019

	2020	2019
ASSETS		
Pooled cash and investments	$ 57,383	$ 50,370
Interest receivable	91	105
Total assets	$ 57,474	$ 50,475
FUND BALANCE		
Restricted	$ 57,474	$ 50,475

LINCOLN COUNTY, NEVADA
NONMAJOR DISTRICT COURT ENRICHMENT SPECIAL REVENUE FUND
SCHEDULE OF REVENUES, EXPENDITURES, AND CHANGES
IN FUND BALANCE - BUDGET (GAAP BASIS) AND ACTUAL
Year Ended June 30, 2020
(With Comparative Actual Amounts for Year Ended June 30, 2019)

	2020			2019
	Budget	Actual	Variance-Positive (Negative)	
Revenues:				
Charges for services:				
Clerk fees	$ 3,500	$ 5,508	$ 2,008	$ 5,877
Miscellaneous:				
Investment income	-	1,491	1,491	929
Total revenues	3,500	6,999	3,499	6,806
Expenditures:				
Current:				
Judicial:				
Services and supplies	48,599	-	48,599	-
Excess (deficiency) of revenues over expenditures	(45,099)	6,999	52,098	6,806
Fund balance:				
Beginning of year	47,169	50,475	3,306	43,669
End of year	$ 2,070	$ 57,474	$ 55,404	$ 50,475

LINCOLN COUNTY, NEVADA
NONMAJOR DEMERIT POINT REDUCTION SPECIAL REVENUE FUND
BALANCE SHEET
June 30, 2020

	2020
ASSETS	
Pooled cash and investments	$ 1,837
LIABILITIES	
Accounts payable	$ -
FUND BALANCE	
Restricted	1,837
Total liabilities and fund balance	$ 1,837

LINCOLN COUNTY, NEVADA
NONMAJOR DEMERIT POINT REDUCTION SPECIAL REVENUE FUND
SCHEDULE OF REVENUES, EXPENDITURES, AND CHANGES
IN FUND BALANCE - BUDGET (GAAP BASIS) AND ACTUAL
Year Ended June 30, 2020

	2020 Budget	Actual	Variance-Positive (Negative)
Revenues:			
Charges for services:			
Clerk fees	$ 10,000	$ 1,837	$ (8,163)
Expenditures:			
Current:			
Judicial:			
Services and supplies	10,000	-	10,000
Excess (deficiency) of revenues over expenditures	-	1,837	1,837
Fund balance:			
Beginning of year	-	-	-
End of year	$ -	$ 1,837	$ 1,837

LINCOLN COUNTY, NEVADA
NONMAJOR FUND - PROPERTY MANAGEMENT SPECIAL REVENUE FUND
COMPARATIVE BALANCE SHEETS
June 30, 2020 and 2019

	2020	2019
ASSETS		
Pooled cash and investments	$ 81,586	$ 73,415
LIABILITIES		
Accounts payable	$ 5,787	$ 5,422
Accrued payroll and benefits	371	273
Total liabilities	6,158	5,695
FUND BALANCE		
Committed for general government	75,428	67,720
Total liabilities and fund balance	$ 81,586	$ 73,415

LINCOLN COUNTY, NEVADA
NONMAJOR FUND - PROPERTY MANAGEMENT SPECIAL REVENUE FUND
SCHEDULE OF REVENUES, EXPENDITURES, AND CHANGES
IN FUND BALANCE - BUDGET (GAAP BASIS) AND ACTUAL
Year Ended June 30, 2020
(With Comparative Actual Amounts for Year Ended June 30, 2019)

	2020		Variance-Positive	2019
	Budget	Actual	(Negative)	Actual
Revenues:				
Miscellaneous:				
Rent	$ 15,600	$ 14,200	$ (1,400)	$ 15,200
Expenditures:				
General government:				
Salaries and wages	20,346	18,429	1,917	15,167
Employee benefits	6,058	1,320	4,738	2,555
Services and supplies	33,464	26,743	6,721	25,016
Total expenditures	59,868	46,492	13,376	42,738
Excess (deficiency) of revenues over expenditures	(44,268)	(32,292)	11,976	(27,538)
Other financing sources (uses):				
Operating transfer in	40,000	40,000	-	40,000
Net change in fund balance	(4,268)	7,708	11,976	12,462
Fund balance:				
Beginning of year	52,290	67,720	15,430	55,258
End of year	$ 48,022	$ 75,428	$ 27,406	$ 67,720

INTERNALLY REPORTED
SPECIAL REVENUE FUNDS

The Lincoln County Stabilization Fund is used to account for activity intended to cover shortfalls between budgeted and actual General Fund revenues.

The Planning Department Fund is used to account for revenues and expenditures collected for planning and development within the County.

The Rachel Jones Memorial Cemetery Fund is used to account for the maintenance of the cemetery.

The Flood Control Fund is used to account for flood control needs.

The Special Projects Fund is used to account for funds special projects throughout the County.

The Lincoln County Land Act Emergency Disaster Fund is used to account for revenues received from land sales which are to be spent according to resolution specifications for emergency disaster relief.

The Lincoln County Water Emergency Disaster Fund is used to account for revenues received for the County's portion of water sales which are to be spent according to resolution specifications for emergency disaster relief.

LINCOLN COUNTY, NEVADA
INTERNALLY REPORTED (BUDGETARY BASIS) FUNDS REPORTED AS PART OF THE GENERAL FUND FOR EXTERNAL REPORTING PURPOSES
COMBINING BALANCE SHEET
June 30, 2020
(With Comparative Actual Amounts for 2019)

	Stabilization	Planning	Rachel Jones Memorial Cemetery	Flood Control	Special Projects	Lincoln County Land Act Emergency Disaster	Lincoln County Water Emergency Disaster	Totals 2020	Totals 2019
ASSETS									
Pooled cash and investments	$ 136,891	$ 52,455	$ 827	$ 39,015	$ 357,363	$ 9,386	$ 66,344	$ 662,281	$ 703,993
Interest receivable	222	96	-	-	602	22	107	1,049	1,158
Total assets	$ 137,113	$ 52,551	$ 827	$ 39,015	$ 357,965	$ 9,408	$ 66,451	$ 663,330	$ 705,151
LIABILITIES									
Accounts payable	$ -	$ 6,229	$ -	$ -	$ -	$ -	$ -	$ 6,229	$ 6,723
Accrued payroll and benefits	-	2,719	-	-	-	-	-	2,719	2,154
Total liabilities	-	8,948	-	-	-	-	-	8,948	8,877
FUND BALANCE									
Restricted for:									
Stabilization	137,113	-	-	-	-	-	-	137,113	133,488
Rachel Jones Cemetery	-	-	827	-	-	-	-	827	827
General government	-	-	-	-	357,965	-	-	357,965	356,424
Committed for:									
Planning	-	43,603	-	-	-	-	-	43,603	34,921
Flood Control	-	-	-	39,015	-	-	-	39,015	39,920
Land Act	-	-	-	-	-	9,408	-	9,408	65,999
Water	-	-	-	-	-	-	66,451	66,451	64,695
Total fund balance	137,113	43,603	827	39,015	357,965	9,408	66,451	654,382	696,274
Total liabilities and fund balance	$ 137,113	$ 52,551	$ 827	$ 39,015	$ 357,965	$ 9,408	$ 66,451	$ 663,330	$ 705,151

LINCOLN COUNTY, NEVADA
INTERNALLY REPORTED (BUDGETARY BASIS) FUNDS REPORTED AS PART OF THE GENERAL FUND FOR EXTERNAL REPORTING PURPOSES
COMBINING SCHEDULE OF REVENUES, EXPENDITURES, AND CHANGES IN FUND BALANCES
Year Ended June 30, 2020
(With Comparative Actual Amounts for Year Ended June 30, 2019)

	Stabilization	Planning	Rachel Jones Memorial Cemetery	Flood Control	Special Projects	Lincoln County Land Act Emergency Disaster	Lincoln County Water Emergency Disaster	Totals 2020	Totals 2019
Revenues:									
Charges for services	$ -	$ 14,833	$ -	$ -	$ -	$ -	$ -	$ 14,833	$ 12,385
Miscellaneous	3,625	1,566	-	-	22,976	357	1,756	30,280	10,211
Total revenues	3,625	16,399	-	-	22,976	357	1,756	45,113	22,596
Expenditures:									
General government	-	-	-	-	21,435	56,948	-	78,383	26,837
Public works	-	82,717	-	905	-	-	-	83,622	81,646
Total expenditures	-	82,717	-	905	21,435	56,948	-	162,005	108,483
Excess (deficiency) of revenues over expenditures	3,625	(66,318)	-	(905)	1,541	(56,591)	1,756	(116,892)	(85,887)
Other financing sources (uses):									
Operating transfers in	-	75,000	-	-	-	-	-	75,000	285,752
Operating transfers out	-	-	-	-	-	-	-	-	(40,000)
Total other financing sources (uses)	-	75,000	-	-	-	-	-	75,000	245,752
Net change in fund balance	3,625	8,682	-	(905)	1,541	(56,591)	1,756	(41,892)	159,865
Fund balance:									
Beginning of year	133,488	34,921	827	39,920	356,424	65,999	64,695	696,274	536,409
End of year	$ 137,113	$ 43,603	$ 827	$ 39,015	$ 357,965	$ 9,408	$ 66,451	$ 654,382	$ 696,274

LINCOLN COUNTY, NEVADA
STABILIZATION
INTERNALLY REPORTED (BUDGETARY BASIS) FUND REPORTED
AS PART OF THE GENERAL FUND FOR EXTERNAL REPORTING PURPOSES
COMPARATIVE BALANCE SHEETS
June 30, 2020 and 2019

	2020	2019
ASSETS		
Pooled cash and investments	$ 136,891	$ 133,195
Interest receivable	222	293
Total assets	$ 137,113	$ 133,488
FUND BALANCE		
Restricted for stabilization	$ 137,113	$ 133,488

LINCOLN COUNTY, NEVADA
STABILIZATION
INTERNALLY REPORTED (BUDGETARY BASIS) FUND REPORTED
AS PART OF THE GENERAL FUND FOR EXTERNAL REPORTING PURPOSES
SCHEDULE OF REVENUES, EXPENDITURES AND CHANGES IN FUND BALANCE
BUDGET (GAAP BASIS) AND ACTUAL
Year Ended June 30, 2020
(With Comparative Actual Amounts for Year Ended June 30, 2019)

	2020 Budget	2020 Actual	Variance - Positive (Negative)	2019 Actual
Revenues:				
Miscellaneous:				
Investment income	$ 250	$ 3,625	$ 3,375	$ 2,584
Expenditures:				
Current:				
General government:				
Service and supplies	131,404	-	131,404	-
Excess (deficiency) of revenues over expenditures	(131,154)	3,625	134,779	2,584
Fund balance:				
Beginning of year	131,154	133,488	2,334	130,904
End of year	$ -	$ 137,113	$ 137,113	$ 133,488

LINCOLN COUNTY, NEVADA
PLANNING
INTERNALLY REPORTED (BUDGETARY BASIS) FUND REPORTED
AS PART OF THE GENERAL FUND FOR EXTERNAL REPORTING PURPOSES
COMPARATIVE BALANCE SHEETS
June 30, 2020 and 2019

	2020	2019
ASSETS		
Pooled cash and investments	$ 52,455	$ 43,667
Interest receivable	96	131
Total assets	$ 52,551	$ 43,798
LIABILITIES		
Accounts payable	$ 6,229	$ 6,723
Accrued payroll and benefits	2,719	2,154
Total liabilities	8,948	8,877
FUND BALANCE		
Committed for planning	43,603	34,921
Total liabilities and fund balance	$ 52,551	$ 43,798

LINCOLN COUNTY, NEVADA
PLANNING
INTERNALLY REPORTED (BUDGETARY BASIS) FUND REPORTED AS PART OF THE GENERAL FUND FOR EXTERNAL REPORTING PURPOSES
SCHEDULE OF REVENUES, EXPENDITURES, AND CHANGES IN FUND BALANCE - BUDGET (GAAP BASIS) AND ACTUAL
Year Ended June 30, 2020
(With Comparative Actual Amounts for Year Ended June 30, 2019)

	2020 Budget	2020 Actual	Variance-Positive (Negative)	2019 Actual
Revenues:				
Charges for services:				
Planning fees	$ 10,500	$ 14,833	$ 4,333	$ 12,385
Miscellaneous:				
Investment income	-	1,566	1,566	1,156
Total revenues	10,500	16,399	5,899	13,541
Expenditures:				
Current:				
Public works:				
Salaries and wages	70,004	60,853	9,151	60,235
Employee benefits	23,779	14,669	9,110	13,557
Services and supplies	9,560	7,195	2,365	6,949
Total expenditures	103,343	82,717	20,626	80,741
Excess (deficiency) of revenues over expenditures	(92,843)	(66,318)	26,525	(67,200)
Other financing sources (uses):				
Operating transfer in	75,000	75,000	-	75,000
Net change in fund balance	(17,843)	8,682	26,525	7,800
Fund balance:				
Beginning of year	17,843	34,921	17,078	27,121
End of year	$ -	$ 43,603	$ 43,603	$ 34,921

LINCOLN COUNTY, NEVADA
RACHEL JONES MEMORIAL CEMETERY
INTERNALLY REPORTED (BUDGETARY BASIS) FUND REPORTED
AS PART OF THE GENERAL FUND FOR EXTERNAL REPORTING PURPOSES
COMPARATIVE BALANCE SHEETS
June 30, 2020 and 2019

	2020	2019
ASSETS		
Pooled cash and investments	$ 827	$ 827
FUND BALANCE		
Restricted for Rachel Jones Cemetery	$ 827	$ 827

LINCOLN COUNTY, NEVADA
RACHEL JONES MEMORIAL CEMETERY
INTERNALLY REPORTED (BUDGETARY BASIS) FUND REPORTED
AS PART OF THE GENERAL FUND FOR EXTERNAL REPORTING PURPOSES
SCHEDULE OF REVENUES, EXPENDITURES, AND CHANGES
IN FUND BALANCE - BUDGET (GAAP BASIS) AND ACTUAL
Year Ended June 30, 2020
(With Comparative Actual Amounts for Year Ended June 30, 2019)

	2020			
	Budget	Actual	Variance - Positive (Negative)	2019 Actual
Revenues:				
Miscellaneous:	$ -	$ -	$ -	$ -
Expenditures:				
Health:				
Services and supplies	827	-	827	-
Excess (deficiency) of revenues over expenditures	(827)	-	827	-
Fund balance:				
Beginning of year	827	827	-	827
End of year	$ -	$ 827	$ 827	$ 827

LINCOLN COUNTY, NEVADA
FLOOD CONTROL
INTERNALLY REPORTED (BUDGETARY BASIS) FUND REPORTED
AS PART OF THE GENERAL FUND FOR EXTERNAL REPORTING PURPOSES
COMPARATIVE BALANCE SHEETS
June 30, 2020 and 2019

	2020	2019
ASSETS		
Pooled cash and investments	$ 39,015	$ 39,920
LIABILITIES		
Accounts payable	$ -	$ -
FUND BALANCE		
Committed for flood control	39,015	39,920
Total liabilities and fund balance	$ 39,015	$ 39,920

LINCOLN COUNTY, NEVADA
FLOOD CONTROL
INTERNALLY REPORTED (BUDGETARY BASIS) FUND REPORTED
AS PART OF THE GENERAL FUND FOR EXTERNAL REPORTING PURPOSES
SCHEDULE OF REVENUES, EXPENDITURES, AND CHANGES
IN FUND BALANCE - BUDGET (GAAP BASIS) AND ACTUAL
Year Ended June 30, 2020
(With Comparative Actual Amounts for Year Ended June 30, 2019)

	2020 Budget	2020 Actual	Variance-Positive (Negative)	2019 Actual
Revenues:	$ -	$ -	$ -	$ -
Expenditures:				
Current:				
Public works:				
Services and supplies	20,000	905	19,095	905
Excess (deficiency) of revenues over expenditures	(20,000)	(905)	19,095	(905)
Fund balance:				
Beginning of year	20,825	39,920	19,095	40,825
End of year	$ 825	$ 39,015	$ 38,190	$ 39,920

LINCOLN COUNTY, NEVADA
SPECIAL PROJECTS
INTERNALLY REPORTED (BUDGETARY BASIS) FUND REPORTED
AS PART OF THE GENERAL FUND FOR EXTERNAL REPORTING PURPOSES
COMPARATIVE BALANCE SHEETS
June 30, 2020 and 2019

	2020	2019
ASSETS		
Pooled cash and investments	$ 357,363	$ 355,977
Interest receivable	602	447
Total assets	$ 357,965	$ 356,424
LIABILITIES		
Accounts payable	$ -	$ -
FUND BALANCE		
Restricted	357,965	356,424
Total liabilities and fund balance	$ 357,965	$ 356,424

LINCOLN COUNTY, NEVADA
SPECIAL PROJECTS
INTERNALLY REPORTED (BUDGETARY BASIS) FUND REPORTED
AS PART OF THE GENERAL FUND FOR EXTERNAL REPORTING PURPOSES
SCHEDULE OF REVENUES, EXPENDITURES, AND CHANGES
IN FUND BALANCE - BUDGET (GAAP BASIS) AND ACTUAL
Year Ended June 30, 2020
(With Comparative Actual Amounts for Year Ended June 30, 2019)

	2020 Budget	2020 Actual	Variance - Positive (Negative)	2019 Actual
Revenues:				
Miscellaneous:				
Investment Income	$ 2,400	$ 9,841	$ 7,441	$ 3,942
Other	-	13,135	13,135	-
	2,400	22,976	20,576	3,942
Expenditures:				
General government:				
Salaries and wages	-	-	-	4,929
Services and supplies	-	21,435	(21,435)	16,307
Capital outlay	570,000	-	570,000	5,601
Total expenditures	570,000	21,435	548,565	26,837
Excess (deficiency) of revenues over expenditures	(567,600)	1,541	569,141	(22,895)
Other financing sources (uses):				
Operating transfers in	208,911	-	(208,911)	210,752
Operating transfers out	-	-	-	(40,000)
Total other financing sources (uses)	208,911	-	(208,911)	170,752
Net change in fund balance	(358,689)	1,541	360,230	147,857
Fund balance:				
Beginning of year	358,689	356,424	(2,265)	208,567
End of year	$ -	$ 357,965	$ 357,965	$ 356,424

LINCOLN COUNTY, NEVADA
LINCOLN COUNTY LAND ACT EMERGENCY DISASTER
INTERNALLY REPORTED (BUDGETARY BASIS) FUND REPORTED
AS PART OF THE GENERAL FUND FOR EXTERNAL REPORTING PURPOSES
COMPARATIVE BALANCE SHEETS
June 30, 2020 and 2019

	2020	2019
ASSETS		
Pooled cash and investments	$ 9,386	$ 65,854
Interest receivable	22	145
Total assets	$ 9,408	$ 65,999
LIABILITIES		
Accounts payable	$ -	$ -
FUND BALANCE		
Committed	9,408	65,999
Total liabilities and fund balance	$ 9,408	$ 65,999

LINCOLN COUNTY, NEVADA
LINCOLN COUNTY LAND ACT EMERGENCY DISASTER
INTERNALLY REPORTED (BUDGETARY BASIS) FUND REPORTED
AS PART OF THE GENERAL FUND FOR EXTERNAL REPORTING PURPOSES
SCHEDULE OF REVENUES, EXPENDITURES, AND CHANGES
IN FUND BALANCE - BUDGET (GAAP BASIS) AND ACTUAL
Year Ended June 30, 2020
(With Comparative Actual Amounts for Year Ended June 30, 2019)

	2020		Variance - Positive	2019
	Budget	Actual	(Negative)	Actual
Revenues:				
Miscellaneous:				
Investment income	$ -	$ 357	$ 357	$ 1,276
Expenditures:				
Current:				
General government:				
Services and supplies	64,723	56,948	7,775	-
Excess (deficiency) of revenues over expenditures	(64,723)	(56,591)	8,132	1,276
Fund balance:				
Beginning of year	64,723	65,999	1,276	64,723
End of year	$ -	$ 9,408	$ 9,408	$ 65,999

LINCOLN COUNTY, NEVADA
LINCOLN COUNTY WATER EMERGENCY DISASTER
INTERNALLY REPORTED (BUDGETARY BASIS) FUND REPORTED
AS PART OF THE GENERAL FUND FOR EXTERNAL REPORTING PURPOSES
COMPARATIVE BALANCE SHEETS
June 30, 2020 and 2019

	2020	2019
ASSETS		
Pooled cash and investments	$ 66,344	$ 64,553
Interest receivable	107	142
Total assets	$ 66,451	$ 64,695
FUND BALANCE		
Committed	$ 66,451	$ 64,695

LINCOLN COUNTY, NEVADA
LINCOLN COUNTY WATER EMERGENCY DISASTER
INTERNALLY REPORTED (BUDGETARY BASIS) FUND REPORTED
AS PART OF THE GENERAL FUND FOR EXTERNAL REPORTING PURPOSES
SCHEDULE OF REVENUES, EXPENDITURES, AND CHANGES
IN FUND BALANCE - BUDGET (GAAP BASIS) AND ACTUAL
Year Ended June 30, 2020
(With Comparative Actual Amounts for Year Ended June 30, 2019)

	2020 Budget	2020 Actual	Variance - Positive (Negative)	2019 Actual
Revenues:				
Miscellaneous:				
Investment income	$ 100	$ 1,756	$ 1,656	$ 1,253
Expenditures:				
Current:				
General government:				
Services and supplies	63,642	-	63,642	-
Excess (deficiency) of revenues over expenditures	(63,542)	1,756	65,298	1,253
Fund balance:				
Beginning of year	63,542	64,695	1,153	63,442
End of year	$ -	$ 66,451	$ 66,451	$ 64,695

NONMAJOR CAPITAL PROJECTS FUNDS

Capital Projects Funds are used to account for the acquisition and construction of major capital facilities other than those financed by proprietary funds.

The Capital Improvements Fund is used to account for the acquisition and construction of fixed assets in Lincoln County.

The Pioche Town Grant Fund is used to account for the acquisition and construction of fixed assets for the unincorporated town of Pioche, Nevada.

The Pioche Town, Alamo Town, and Panaca Town Funds are used to account for the capital acquisition tax levy.

The Ambulance Fund is used to account for monies being accumulated for the purchase of County ambulances.

The Fair Board Fund is used to account for revenues and expenditures for future fairground improvements.

The Vehicle Capital Projects Fund is used to account for the lease/purchase of equipment and vehicles for various County departments.

The Road Equipment Fund is used to account for monies transferred from the road fund to be accumulated and used for the purchase of heavy road equipment.

The Airport Fund is used to account for construction of facilities at the airport in Panaca, Nevada.

The Lincoln County Land Act Fund is used to account for land sale monies for capital purchases for the County.

The Lincoln County Water Fund is used to account for monies received for the County's portion of water sales within the district to be spent on capital purchases for the County.

The Lincoln County Water District Fund is used to account for monies received for water sales within the district to be spent on capital purchases for the Water District, which is a blended component unit of the County.

LINCOLN COUNTY, NEVADA
NONMAJOR CAPITAL PROJECTS FUNDS
COMBINING BALANCE SHEET
June 30, 2020
(With Comparative Totals for June 30, 2019)

	Capital Improvements	Pioche Town Grant	Pioche Town	Alamo Town	Panaca Town	Ambulance	Fair Board	Vehicle	Road Equipment	Airport	Lincoln County Land Act
ASSETS											
Pooled cash and investments	$ 794	$ 11,958	$ 55,280	$ 21,551	$ 23,319	$ 12,544	$ 17,365	$ 227	$ 292,983	$ 3,126	$ 31,190
Interest receivable	101	21	217	82	85	49	88	28	455	14	50
Taxes receivable	1,555	-	-	-	-	-	-	-	-	-	-
Special assessment receivable	-	-	-	-	-	-	-	-	-	-	-
Total assets	$ 2,450	$ 11,979	$ 55,497	$ 21,633	$ 23,404	$ 12,593	$ 17,453	$ 255	$ 293,438	$ 3,140	$ 31,240
LIABILITIES											
Accounts payable	$ -	$ -	$ -	$ -	$ -	$ -	$ -	$ -	$ -	$ -	$ -
DEFERRED INFLOWS OF RESOURCES											
Unavailable revenue - property taxes	1,359	-	-	-	-	-	-	-	-	-	-
FUND BALANCE											
Restricted for:											
Capital projects	1,091	11,979	55,497	21,633	23,404	12,593	17,453	255	293,438	3,140	31,240
Total liabilities, deferred inflows of resources, and fund balance	$ 2,450	$ 11,979	$ 55,497	$ 21,633	$ 23,404	$ 12,593	$ 17,453	$ 255	$ 293,438	$ 3,140	$ 31,240

LINCOLN COUNTY, NEVADA
NONMAJOR CAPITAL PROJECTS FUNDS
COMBINING BALANCE SHEET
June 30, 2020
(With Comparative Totals for June 30, 2019)

	Lincoln County Water	Lincoln County Water District	Totals 2020	2019
ASSETS				
Pooled cash and investments	$ 82,414	$ 858,129	$ 1,410,880	$ 1,167,660
Interest receivable	133	3,548	4,871	4,089
Taxes receivable	-	-	1,555	1,715
Special assessment receivable	-	79,764	79,764	-
Total assets	$ 82,547	$ 941,441	$ 1,497,070	$ 1,173,464
LIABILITIES				
Accounts payable	$ -	$ -	$ -	$ 201
DEFERRED INFLOWS OF RESOURCES				
Unavailable revenue - property taxes	-	-	1,359	1,360
FUND BALANCE				
Restricted for:				
Capital projects	82,547	941,441	1,495,711	1,171,903
Total liabilities, deferred inflows of resources, and fund balance	$ 82,547	$ 941,441	$ 1,497,070	$ 1,173,464

LINCOLN COUNTY, NEVADA
NONMAJOR CAPITAL PROJECTS FUNDS
COMBINING SCHEDULE OF REVENUES, EXPENDITURES,
AND CHANGES IN FUND BALANCE
Year Ended June 30, 2020
(With Comparative Actual Amounts for Year Ended June 30, 2019)

	Capital Improvements	Pioche Town Grant	Pioche Town	Alamo Town	Panaca Town	Ambulance	Fair Board	Vehicle	Road Equipment	Airport	Lincoln County Land Act
Revenues:											
Taxes	$ 116,425	$ -	$ -	$ -	$ -	$ -	$ -	$ -	$ -	$ -	$ -
Intergovernmental	109	-	-	-	-	-	-	-	-	-	-
Special assessment	-	-	-	-	-	-	-	-	-	-	-
Miscellaneous	862	345	1,826	690	3,716	412	738	232	7,447	121	825
Total revenues	117,396	345	1,826	690	3,716	412	738	232	7,447	121	825
Expenditures:											
Current:											
Intergovernmental	8,169	-	-	-	-	-	-	-	-	-	-
Capital projects	-	2,650	3,752	-	-	-	7,285	135,117	-	-	-
Debt service:											
Principal	-	-	-	-	-	-	-	77,642	-	-	-
Interest	-	-	-	-	-	-	-	5,269	-	-	-
Total expenditures	8,169	2,650	3,752	-	-	-	7,285	218,028	-	-	-
Excess (deficiency) of revenues over expenditures	109,227	(2,305)	(1,926)	690	3,716	412	(6,547)	(217,796)	7,447	121	825
Other financing sources (uses):											
Operating transfers in	-	-	3,502	2,334	4,667	-	-	110,000	100,000	-	-
Operating transfers out	(120,503)	-	-	-	-	-	-	-	-	-	-
Capital lease proceeds	-	-	-	-	-	-	-	100,300	-	-	-
Total other financing sources (uses)	(120,503)	-	3,502	2,334	4,667	-	-	210,300	100,000	-	-
Net change in fund balance	(11,276)	(2,305)	1,576	3,024	8,383	412	(6,547)	(7,496)	107,447	121	825
Fund balance:											
Beginning of year	12,367	14,284	53,921	18,609	15,021	12,181	24,000	7,751	185,991	3,019	30,415
End of year	$ 1,091	$ 11,979	$ 55,497	$ 21,633	$ 23,404	$ 12,593	$ 17,453	$ 255	$ 293,438	$ 3,140	$ 31,240

LINCOLN COUNTY, NEVADA
NONMAJOR CAPITAL PROJECTS FUNDS
COMBINING SCHEDULE OF REVENUES, EXPENDITURES,
AND CHANGES IN FUND BALANCE
Year Ended June 30, 2020
(With Comparative Actual Amounts for Year Ended June 30, 2019)

	Lincoln County Water	Lincoln County Water District	Totals 2020	Totals 2019
Revenues:				
Taxes	$ -	$ -	$ 116,425	$ 114,793
Intergovernmental	-	-	109	126
Special assessment	-	186,003	186,003	-
Miscellaneous	2,182	41,459	60,855	34,117
Total revenues	2,182	227,462	363,392	149,036
Expenditures:				
Current:				
Intergovernmental	-	-	8,169	8,040
Capital projects	-	-	148,804	197,326
Debt service:				
Principal	-	-	77,642	77,146
Interest	-	-	5,269	1,834
Total expenditures	-	-	239,884	284,346
Excess (deficiency) of revenues over expenditures	2,182	227,462	123,508	(135,310)
Other financing sources (uses):				
Operating transfers in	-	-	220,503	231,338
Operating transfers out	-	-	(120,503)	(131,338)
Capital lease proceeds	-	-	100,300	133,245
Total other financing sources (uses)	-	-	200,300	233,245
Net change in fund balance	2,182	227,462	323,808	97,935
Fund balance:				
Beginning of year	80,365	713,979	1,171,903	1,073,968
End of year	$ 82,547	$ 941,441	$ 1,495,711	$ 1,171,903

LINCOLN COUNTY, NEVADA
NONMAJOR CAPITAL IMPROVEMENTS CAPITAL PROJECTS FUND
COMPARATIVE BALANCE SHEETS
June 30, 2020 and 2019

	2020	2019
ASSETS		
Pooled cash and investments	$ 794	$ 11,980
Interest receivable	101	32
Taxes receivable	1,555	1,715
Total assets	$ 2,450	$ 13,727
LIABILITIES		
Accounts payable	$ -	$ -
DEFERRED INFLOWS OF RESOURCES		
Unavailable revenue - property taxes	1,359	1,360
FUND BALANCE		
Restricted	1,091	12,367
Total liabilities, deferred inflows of resources, and fund balance	$ 2,450	$ 13,727

LINCOLN COUNTY, NEVADA
NONMAJOR CAPITAL IMPROVEMENTS CAPITAL PROJECTS FUND
SCHEDULE OF REVENUES, EXPENDITURES, AND CHANGES
IN FUND BALANCE - BUDGET (GAAP BASIS) AND ACTUAL
Year Ended June 30, 2020
(With Comparative Actual Amounts for Year Ended June 30, 2019)

	2020 Budget	2020 Actual	Variance - Positive (Negative)	2019 Actual
Revenues:				
Taxes:				
Property taxes	$ 119,291	$ 116,425	$ (2,866)	$ 114,793
Intergovernmental:				
Fish and wildlife	-	109	109	126
Miscellaneous:				
Investment income	-	862	862	282
Total revenues	119,291	117,396	(1,895)	115,201
Expenditures:				
Current:				
Intergovernmental	19,090	8,169	10,921	8,040
Excess (deficiency) of revenues over expenditures	100,201	109,227	9,026	107,161
Other financing sources (uses) :				
Operating transfers out	(111,270)	(120,503)	(9,233)	(131,338)
Net change in fund balance	(11,069)	(11,276)	(207)	(24,177)
Fund balance:				
Beginning of year	11,069	12,367	1,298	36,544
End of year	$ -	$ 1,091	$ 1,091	$ 12,367

LINCOLN COUNTY, NEVADA
NONMAJOR PIOCHE TOWN GRANT CAPITAL PROJECTS FUND
COMPARATIVE BALANCE SHEETS
June 30, 2020 and 2019

	2020	2019
ASSETS		
Pooled cash and investments	$ 11,958	$ 14,253
Interest receivable	21	31
Total assets	$ 11,979	$ 14,284
LIABILITIES		
Accounts payable	$ -	$ -
FUND BALANCE		
Restricted	11,979	14,284
Total liabilities and fund balance	$ 11,979	$ 14,284

LINCOLN COUNTY, NEVADA
NONMAJOR PIOCHE TOWN GRANT CAPITAL PROJECTS FUND
SCHEDULE OF REVENUES, EXPENDITURES, AND CHANGES
IN FUND BALANCE - BUDGET (GAAP BASIS) AND ACTUAL
Year Ended June 30, 2020
(With Comparative Actual Amounts for Year Ended June 30, 2019)

	2020			
	Budget	Actual	Variance - Positive (Negative)	2019 Actual
Revenues:				
Miscellaneous:				
Investment income	$ -	$ 345	$ 345	$ 277
Expenditures:				
Current:				
Capital projects:				
Capital outlay	24,007	2,650	21,357	-
Excess (deficiency) of revenues over expenditures	(24,007)	(2,305)	21,702	277
Other financing sources (uses):				
Operating transfers in	10,000	-	(10,000)	-
Net change in fund balance	(14,007)	(2,305)	11,702	277
Fund balance:				
Beginning of year	14,007	14,284	277	14,007
End of year	$ -	$ 11,979	$ 11,979	$ 14,284

LINCOLN COUNTY, NEVADA
NONMAJOR PIOCHE TOWN CAPITAL PROJECTS FUND
COMPARATIVE BALANCE SHEETS
June 30, 2020 and 2019

	2020	2019
ASSETS		
Pooled cash and investments	$ 55,280	$ 53,806
Interest receivable	217	115
Total assets	$ 55,497	$ 53,921
LIABILITIES		
Accounts payable	$ -	$ -
FUND BALANCE		
Restricted	55,497	53,921
Total liabilities and fund balance	$ 55,497	$ 53,921

LINCOLN COUNTY, NEVADA
NONMAJOR PIOCHE TOWN CAPITAL PROJECTS FUND
SCHEDULE OF REVENUES, EXPENDITURES, AND CHANGES IN FUND BALANCE - BUDGET (GAAP BASIS) AND ACTUAL
Year Ended June 30, 2020
(With Comparative Actual Amounts for Year Ended June 30, 2019)

	2020		Variance - Positive	2019
	Budget	Actual	(Negative)	Actual
Revenues:				
Miscellaneous:				
Investment income	$ -	$ 1,826	$ 1,826	$ 1,017
Expenditures:				
Current:				
Capital projects:				
Capital outlay	71,609	3,752	67,857	-
Excess (deficiency) of revenues over expenditures	(71,609)	(1,926)	69,683	1,017
Other financing sources (uses):				
Operating transfers in	15,656	3,502	(12,154)	3,446
Net change in fund balance	(55,953)	1,576	57,529	4,463
Fund balance:				
Beginning of year	55,953	53,921	(2,032)	49,458
End of year	$ -	$ 55,497	$ 55,497	$ 53,921

LINCOLN COUNTY, NEVADA
NONMAJOR ALAMO TOWN CAPITAL PROJECTS FUND
COMPARATIVE BALANCE SHEETS
June 30, 2020 and 2019

	2020	2019
ASSETS		
Pooled cash and investments	$ 21,551	$ 18,562
Interest receivable	82	47
Total assets	$ 21,633	$ 18,609
LIABILITIES		
Accounts payable	$ -	$ -
FUND BALANCE		
Restricted	21,633	18,609
Total liabilities and fund balance	$ 21,633	$ 18,609

LINCOLN COUNTY, NEVADA
NONMAJOR ALAMO TOWN CAPITAL PROJECTS FUND
SCHEDULE OF REVENUES, EXPENDITURES, AND CHANGES IN FUND BALANCE - BUDGET (GAAP BASIS) AND ACTUAL
Year Ended June 30, 2020
(With Comparative Actual Amounts for Year Ended June 30, 2019)

	2020			2019
	Budget	Actual	Variance - Positive (Negative)	Actual
Revenues:				
Miscellaneous:				
Investment income	$ 100	$ 690	$ 590	$ 417
Expenditures:				
Current:				
Capital projects:				
Capital outlay	14,562	-	14,562	-
Excess (deficiency) of revenues over expenditures	(14,462)	690	15,152	417
Other financing sources (uses):				
Operating transfers in	2,387	2,334	(53)	2,297
Net change in fund balance	(12,075)	3,024	15,099	2,714
Fund balance:				
Beginning of year	12,075	18,609	6,534	15,895
End of year	$ -	$ 21,633	$ 21,633	$ 18,609

LINCOLN COUNTY, NEVADA
NONMAJOR PANACA TOWN CAPITAL PROJECTS FUND
COMPARATIVE BALANCE SHEETS
June 30, 2020 and 2019

	2020	2019
ASSETS		
Pooled cash and investments	$ 23,319	$ 14,983
Interest receivable	85	38
Total assets	$ 23,404	$ 15,021
LIABILITIES		
Accounts payable	$ -	$ -
FUND BALANCE		
Restricted	23,404	15,021
Total liabilities and fund balance	$ 23,404	$ 15,021

LINCOLN COUNTY, NEVADA
NONMAJOR PANACA TOWN CAPITAL PROJECTS FUND
SCHEDULE OF REVENUES, EXPENDITURES, AND CHANGES IN FUND BALANCE - BUDGET (GAAP BASIS) AND ACTUAL
Year Ended June 30, 2020
(With Comparative Actual Amounts for Year Ended June 30, 2019)

	2020 Budget	2020 Actual	Variance - Positive (Negative)	2019 Actual
Revenues:				
Miscellaneous:				
Investment income	$ 10	$ 716	$ 706	$ 332
Donation	-	3,000	3,000	-
Total revenues	10	3,716	3,706	332
Expenditures:				
Current:				
Capital projects:				
Services and supplies	-	-	-	1,378
Capital outlay	11,812	-	11,812	-
Total expenditures	11,812	-	11,812	1,378
Excess (deficiency) of revenues over expenditures	(11,802)	3,716	15,518	(1,046)
Other financing sources (uses):				
Operating transfers in	4,771	4,667	(104)	4,595
Net change in fund balance	(7,031)	8,383	15,414	3,549
Fund balance:				
Beginning of year	7,031	15,021	7,990	11,472
End of year	$ -	$ 23,404	$ 23,404	$ 15,021

LINCOLN COUNTY, NEVADA
NONMAJOR AMBULANCE CAPITAL PROJECTS FUND
COMPARATIVE BALANCE SHEETS
June 30, 2020 and 2019

	2020	2019
ASSETS		
Pooled cash and investments	$ 12,544	$ 12,153
Interest receivable	49	28
Total assets	$ 12,593	$ 12,181
LIABILITIES		
Accounts payable	$ -	$ -
FUND BALANCE		
Restricted	12,593	12,181
Total liabilities and fund balance	$ 12,593	$ 12,181

LINCOLN COUNTY, NEVADA
NONMAJOR AMBULANCE CAPITAL PROJECTS FUND
SCHEDULE OF REVENUES, EXPENDITURES, AND CHANGES IN FUND BALANCE - BUDGET (GAAP BASIS) AND ACTUAL
Year Ended June 30, 2020
(With Comparative Actual Amounts for Year Ended June 30, 2019)

	2020 Budget	2020 Actual	Variance-Positive (Negative)	2019 Actual
Miscellaneous:				
Investment income	$ -	$ 412	$ 412	$ 249
Expenditures:				
Current:				
Capital projects:				
Capital outlay	11,932	-	11,932	-
Excess (deficiency) of revenues over expenditures	(11,932)	412	12,344	249
Fund balance:				
Beginning of year	11,932	12,181	249	11,932
End of year	$ -	$ 12,593	$ 12,593	$ 12,181

LINCOLN COUNTY, NEVADA
NONMAJOR FAIR BOARD CAPITAL PROJECTS FUND
COMPARATIVE BALANCE SHEETS
June 30, 2020 and 2019

	2020	2019
ASSETS		
Pooled cash and investments	$ 17,365	$ 24,145
Interest receivable	88	56
Total assets	$ 17,453	$ 24,201
LIABILITIES		
Accounts payable	$ -	$ 201
FUND BALANCE		
Restricted	17,453	24,000
Total liabilities and fund balance	$ 17,453	$ 24,201

LINCOLN COUNTY, NEVADA
NONMAJOR FAIR BOARD CAPITAL PROJECTS FUND
SCHEDULE OF REVENUES, EXPENDITURES, AND CHANGES
IN FUND BALANCE - BUDGET (GAAP BASIS) AND ACTUAL
Year Ended June 30, 2020
(With Comparative Actual Amounts for Year Ended June 30, 2019)

	2020		Variance - Positive	2019
	Budget	Actual	(Negative)	Actual
Revenues:				
Miscellaneous:				
Investment income	$ 200	$ 738	$ 538	$ 497
Expenditures:				
Current:				
Capital projects:				
Services and supplies	-	2,285	(2,285)	912
Capital outlay	23,829	5,000	18,829	5,000
Total expenditures	23,829	7,285	16,544	5,912
Excess (deficiency) of revenues over expenditures	(23,629)	(6,547)	17,082	(5,415)
Fund balance:				
Beginning of year	23,629	24,000	371	29,415
End of year	$ -	$ 17,453	$ 17,453	$ 24,000

LINCOLN COUNTY, NEVADA
NONMAJOR VEHICLE CAPITAL PROJECTS FUND
COMPARATIVE BALANCE SHEETS
June 30, 2020 and 2019

	2020	2019
ASSETS		
Pooled cash and investments	$ 227	$ 7,728
Interest receivable	28	23
Total assets	$ 255	$ 7,751
LIABILITIES		
Accounts payable	$ -	$ -
FUND BALANCE		
Restricted	255	7,751
Total liabilities and fund balance	$ 255	$ 7,751

LINCOLN COUNTY, NEVADA
NONMAJOR VEHICLE CAPITAL PROJECTS FUND
SCHEDULE OF REVENUES, EXPENDITURES, AND CHANGES IN FUND BALANCE - BUDGET (GAAP BASIS) AND ACTUAL
Year Ended June 30, 2020
(With Comparative Actual Amounts for Year Ended June 30, 2019)

	2020		Variance - Positive	2019
	Budget	Actual	(Negative)	Actual
Revenues:				
Miscellaneous:				
Investment income	$ -	$ 232	$ 232	$ 201
Expenditures:				
Current:				
Capital projects:				
Capital outlay	169,851	135,117	34,734	181,144
Debt service:				
Principal	47,180	77,642	(30,462)	77,146
Interest	5,269	5,269	-	1,834
Total debt service	52,449	82,911	(30,462)	78,980
Total expenditures	222,300	218,028	4,272	260,124
Excess (deficiency) of revenues over expenditures	(222,300)	(217,796)	4,504	(259,923)
Other financing sources (uses):				
Operating transfers in	111,270	110,000	(1,270)	121,000
Sale of capital assets	10,000	-	(10,000)	-
Capital lease proceeds	100,300	100,300	-	133,245
Total other financing sources (uses)	221,570	210,300	(11,270)	254,245
Net change in fund balance	(730)	(7,496)	(6,766)	(5,678)
Fund balance:				
Beginning of year	2,336	7,751	5,415	13,429
End of year	$ 1,606	$ 255	$ (1,351)	$ 7,751

LINCOLN COUNTY, NEVADA
NONMAJOR ROAD EQUIPMENT CAPITAL PROJECTS FUND
COMPARATIVE BALANCE SHEETS
June 30, 2020 and 2019

	2020	2019
ASSETS		
Pooled cash and investments	$ 292,983	$ 185,592
Interest receivable	455	399
Total assets	$ 293,438	$ 185,991
FUND BALANCE		
Restricted	$ 293,438	$ 185,991

LINCOLN COUNTY, NEVADA
NONMAJOR ROAD EQUIPMENT CAPITAL PROJECTS FUND
SCHEDULE OF REVENUES, EXPENDITURES, AND CHANGES IN FUND BALANCE - BUDGET (GAAP BASIS) AND ACTUAL
Year Ended June 30, 2020
(With Comparative Actual Amounts for Year Ended June 30, 2019)

	2020			
	Budget	Actual	Variance - Positive (Negative)	2019 Actual
Revenues:				
Miscellaneous:				
Investment income	$ -	$ 7,447	$ 7,447	$ 3,521
Expenditures:				
Current:				
Capital projects:				
Capital outlay	200,000	-	200,000	-
Excess (deficiency) of revenues over expenditures	(200,000)	7,447	207,447	3,521
Other financing sources (uses):				
Operating transfers in	100,000	100,000	-	100,000
Net change in fund balance	(100,000)	107,447	207,447	103,521
Fund balance:				
Beginning of year	100,000	185,991	85,991	82,470
End of year	$ -	$ 293,438	$ 293,438	$ 185,991

LINCOLN COUNTY, NEVADA
NONMAJOR AIRPORT CAPITAL PROJECTS FUND
COMPARATIVE BALANCE SHEETS
June 30, 2020 and 2019

	2020	2019
ASSETS		
Pooled cash and investments	$ 3,126	$ 3,013
Interest receivable	14	6
Total assets	$ 3,140	$ 3,019
LIABILITIES		
Accounts payable	$ -	$ -
FUND BALANCE		
Restricted	3,140	3,019
Total liabilities and fund balance	$ 3,140	$ 3,019

LINCOLN COUNTY, NEVADA
NONMAJOR AIRPORT CAPITAL PROJECTS FUND
SCHEDULE OF REVENUES, EXPENDITURES, AND CHANGES IN FUND BALANCE - BUDGET (GAAP BASIS) AND ACTUAL
Year Ended June 30, 2020
(With Comparative Actual Amounts for Year Ended June 30, 2019)

	2020		Variance - Positive	2019
	Budget	Actual	(Negative)	Actual
Revenues				
Miscellaneous:				
Investment income	$ -	$ 121	$ 121	$ 51
Expenditures:				
Curent:				
Capital projects:				
Capital outlay	2,900	-	2,900	-
Excess (deficiency) of revenues over expenditures	(2,900)	121	3,021	51
Fund balance:				
Beginning of year	2,968	3,019	51	2,968
End of year	$ 68	$ 3,140	$ 3,072	$ 3,019

LINCOLN COUNTY, NEVADA
NONMAJOR LINCOLN COUNTY LAND ACT CAPITAL PROJECTS FUND
COMPARATIVE BALANCE SHEETS
June 30, 2020 and 2019

	2020	2019
ASSETS		
Pooled cash and investments	$ 31,190	$ 30,348
Interest receivable	50	67
Total assets	$ 31,240	$ 30,415
LIABILITIES		
Accounts payable	$ -	$ -
FUND BALANCE		
Restricted	31,240	30,415
Total liabilities and fund balance	$ 31,240	$ 30,415

LINCOLN COUNTY, NEVADA
NONMAJOR LINCOLN COUNTY LAND ACT CAPITAL PROJECTS FUND
SCHEDULE OF REVENUES, EXPENDITURES, AND CHANGES
IN FUND BALANCE - BUDGET (GAAP BASIS) AND ACTUAL
Year Ended June 30, 2020
(With Comparative Actual Amounts for Year Ended June 30, 2019)

	2020			
	Budget	Actual	Variance - Positive (Negative)	2019 Actual
Revenues:				
Miscellaneous:				
Investment income	$ -	$ 825	$ 825	$ 589
Expenditures:				
Current:				
Capital projects:				
Capital outlay	29,826	-	29,826	-
Excess (deficiency) of revenues over expenditures	(29,826)	825	30,651	589
Fund balance:				
Beginning of year	29,826	30,415	589	29,826
End of year	$ -	$ 31,240	$ 31,240	$ 30,415

LINCOLN COUNTY, NEVADA
NONMAJOR LINCOLN COUNTY WATER CAPITAL PROJECTS FUND
COMPARATIVE BALANCE SHEETS
June 30, 2020 and 2019

	2020	2019
ASSETS		
Pooled cash and investments	$ 82,414	$ 80,189
Interest receivable	133	176
Total assets	$ 82,547	$ 80,365
LIABILITIES		
Accounts payable	$ -	$ -
FUND BALANCE		
Restricted	82,547	80,365
Total liabilities and fund balance	$ 82,547	$ 80,365

LINCOLN COUNTY, NEVADA
NONMAJOR LINCOLN COUNTY WATER CAPITAL PROJECTS FUND
SCHEDULE OF REVENUES, EXPENDITURES, AND CHANGES
IN FUND BALANCE - BUDGET (GAAP BASIS) AND ACTUAL
Year Ended June 30, 2020
(With Comparative Actual Amounts for Year Ended June 30, 2019)

	2020			
	Budget	Actual	Variance - Positive (Negative)	2019 Actual
Revenues:				
Miscellaneous:				
Investment income	$ -	$ 2,182	$ 2,182	$ 1,555
Expenditures:				
Current:				
Capital projects:				
Capital outlay	78,810	-	78,810	-
Excess (deficiency) of revenues over expenditures	(78,810)	2,182	80,992	1,555
Fund balance:				
Beginning of year	78,810	80,365	1,555	78,810
End of year	$ -	$ 82,547	$ 82,547	$ 80,365

LINCOLN COUNTY, NEVADA
NONMAJOR LINCOLN COUNTY WATER DISTRICT CAPITAL PROJECTS FUND
COMPARATIVE BALANCE SHEETS
June 30, 2020 and 2019

	2020	2019
ASSETS		
Pooled cash and investments	$ 858,129	$ 710,908
Interest receivable	3,548	3,071
Special assessment receivable	79,764	-
Total assets	$ 941,441	$ 713,979
LIABILITIES		
Accounts payable	$ -	$ -
FUND BALANCE		
Restricted	941,441	713,979
Total liabilities and fund balance	$ 941,441	$ 713,979

LINCOLN COUNTY, NEVADA
NONMAJOR LINCOLN COUNTY WATER DISTRICT CAPITAL PROJECTS FUND
SCHEDULE OF REVENUES, EXPENDITURES, AND CHANGES
IN FUND BALANCE - BUDGET (GAAP BASIS) AND ACTUAL
Year Ended June 30, 2020
(With Comparative Actual Amounts for Year Ended June 30, 2019)

	2020		Variance - Positive	2019
	Budget	Actual	(Negative)	Actual
Revenues:				
Special assessment:				
Capital improvement	$ -	$ 186,003	$ 186,003	$ -
Miscellaneous:				
Investment income	7,500	41,459	33,959	25,129
Total revenues	7,500	227,462	219,962	25,129
Expenditures:				
Current:				
Capital projects:				
Capital outlay	712,742	-	712,742	8,892
Excess (deficiency) of revenues over expenditures	(705,242)	227,462	932,704	16,237
Fund balance:				
Beginning of year	705,242	713,979	8,737	697,742
End of year	$ -	$ 941,441	$ 941,441	$ 713,979

NONMAJOR ENTERPRISE FUNDS

The Enterprise Fund are used to account for operations that are financed and operated in a manner similar to private business enterprises–where the intent of the County's management is that the costs of providing goods or services be financed or recovered primarily through user charges.

The Pioche Public Utility Funds are used to account for revenues and expenses of the water, sewer, and electric utility services provided for the residents of Pioche, Nevada.

The Building Department Fund is used to account for revenues and expenses of building inspection services provided for the residents of Pioche, Nevada.

LINCOLN COUNTY, NEVADA
NONMAJOR ENTERPRISE FUNDS
COMBINING STATEMENT OF NET POSITION
June 30, 2020
With Comparative Total for June 30, 2019

	Pioche Public Water Utility	Pioche Public Sewer Utility	Pioche Public Electric Utility	Building Department	Totals 2020	Totals 2019
ASSETS						
Current assets:						
Pooled cash and investments	$ 234,895	$ 277,693	$ 206,441	$ 21,014	$ 740,043	$ 793,828
Accounts receivable	21,026	12,869	-	-	33,895	85,495
Interest receivable	188	242	392	29	851	758
Total current assets	256,109	290,804	206,833	21,043	774,789	880,081
Restricted assets:						
Cash	-	11,490	-	-	11,490	32,238
Capital assets:						
Land	4,000	10,000	-	-	14,000	14,000
Property, plant and equipment (net of depreciation)	461,597	529,272	-	-	990,869	1,214,858
Total capital assets	465,597	539,272	-	-	1,004,869	1,228,858
Total assets	721,706	841,566	206,833	21,043	1,791,148	2,141,177
DEFERRED OUTFLOWS OF RESOURCES						
Deferred pension charge	11,567	5,600	-	19,101	36,268	59,106
Deferred opeb	2,864	2,864	-	-	5,728	5,286
Total deferred outflows of resources	14,431	8,464	-	19,101	41,996	64,392
LIABILITIES						
Current liabilities:						
Accounts payable	14,609	1,268	-	261	16,138	39,657
Accrued payroll and benefits	5,226	3,188	1,127	5,849	15,390	19,805
Customer deposits	90	-	-	-	90	8,120
Accrued compensated absences	6,801	4,533	-	5,175	16,509	21,860
Accrued interest payable	-	1,288	-	-	1,288	1,312
Total current liabilities	26,726	10,277	1,127	11,285	49,415	90,754
Current liabilities payable from restricted assets:						
Revenue bond	-	3,440	-	-	3,440	10,630
Non-current liabilities:						
Accrued compensated absences	6,277	4,185	-	3,450	13,912	14,449
Net pension liability	86,443	44,149	-	94,488	225,080	367,620
OPEB liability	57,453	57,453	-	-	114,906	93,697
Revenue bond	-	174,049	-	-	174,049	177,489
Total non-current liabilities	150,173	279,836	-	97,938	527,947	653,255
Total liabilities	176,899	293,553	1,127	109,223	580,802	754,639
DEFERRED INFLOWS OF RESOURCES						
Deferred pension charge	10,266	5,488	-	20,318	36,072	40,170
NET POSITION						
Invested in capital assets, net of related debt	465,597	361,783	-	-	827,380	1,040,739
Restricted for revenue bond debt service	-	11,490	-	-	11,490	32,238
Unrestricted	83,375	177,716	205,706	(89,397)	377,400	337,783
Total net position	$ 548,972	$ 550,989	$ 205,706	$ (89,397)	$ 1,216,270	$ 1,410,760

LINCOLN COUNTY, NEVADA
NONMAJOR ENTERPRISE FUNDS
COMBINING SCHEDULE OF REVENUES, EXPENSES, AND CHANGES IN NET POSITION
Year Ended June 30, 2020
With Comparative Total for June 30, 2019

	Pioche Public Water Utility	Pioche Public Sewer Utility	Pioche Public Electric Utility	Building Department	Totals 2020	Totals 2019
Operating revenues:						
Charges for services	$ 191,261	$ 106,758	$ 260,233	$ 22,144	$ 580,396	$ 1,091,024
Operating expenses:						
Salaries and wages	57,916	26,810	44,961	36,431	166,118	184,612
Employee benefits	40,331	24,526	22,669	31,863	119,389	100,443
Services and supplies	79,332	23,498	239,473	3,682	345,985	722,834
Depreciation	22,937	18,557	-	476	41,970	79,227
Total operating expenses	200,516	93,391	307,103	72,452	673,462	1,087,116
Operating income (loss)	(9,255)	13,367	(46,870)	(50,308)	(93,066)	3,908
Non-operating revenues (expenses):						
Investment income	3,082	3,955	6,404	482	13,923	6,686
Operating transfers in	-	-		50,000	50,000	40,000
Capital fees	21,607	15,974	19,031	-	56,612	135,632
Custom fees	9,209	114	1,752	-	11,075	25,409
Interest expense	(1,309)	(7,850)	-	-	(9,159)	(8,899)
Total non-operating revenues (expenses)	32,589	12,193	27,187	50,482	122,451	198,828
Change in net position before special items	23,334	25,560	(19,683)	174	29,385	202,736
Special items:						
Sale of electric operations:						
Capital asset transfers in	2,320	320	(2,640)	-	-	-
Loss on disposal of assets	-	-	(349,430)	-	(349,430)	-
Gain on net pension liabilites	-	-	125,407	-	125,407	-
Loss on OPEB liability	(14,661)	(14,661)	29,470	-	148	-
Total special items	(12,341)	(14,341)	(197,193)	-	(223,875)	-
Change in net position	10,993	11,219	(216,876)	174	(194,490)	202,736
Net Position:						
Beginning of year	537,979	539,770	422,582	(89,571)	1,410,760	1,208,024
End of year	$ 548,972	$ 550,989	$ 205,706	$ (89,397)	$ 1,216,270	$ 1,410,760

LINCOLN COUNTY, NEVADA
NONMAJOR ENTERPRISE FUNDS
COMBINING STATEMENT OF CASH FLOWS
Year Ended June 30, 2020
With Comparative Total for June 30, 2019

	Pioche Public Water Utility	Pioche Public Sewer Utility	Pioche Public Electric Utility	Building Department	Totals 2020	Totals 2019
Cash flows from operating activities:						
Cash received from customers	$ 189,923	$ 104,581	$ 307,318	$ 22,144	$ 623,966	$ 1,090,006
Cash paid for services and supplies	(70,366)	(23,131)	(272,450)	(3,557)	(369,504)	(749,618)
Cash paid for salaries and benefits	(83,456)	(35,712)	(238,859)	(70,897)	(428,924)	(281,838)
Net cash provided (used) by operating activities	36,101	45,738	(203,991)	(52,310)	(174,462)	58,550
Cash flows from noncapital financing activities:						
Operating transfers in/out	-	-	-	50,000	50,000	40,000
Cash flows from capital and related financing activities:						
Purchases of capital assets	(11,775)	-	-	-	(11,775)	(71,282)
Capital fees	21,607	15,974	19,031	-	56,612	135,632
Custom fees	9,209	114	1,752	-	11,075	25,409
Debt retirement	(7,336)	(3,294)	-	-	(10,630)	(22,993)
Interest paid	(1,309)	(7,874)	-	-	(9,183)	(8,923)
Net cash provided (used) by capital and related financing activities	10,396	4,920	20,783	-	36,099	57,843
Cash flows from investing activities:						
Investment income	3,079	3,972	6,280	499	13,830	6,389
Net change in cash and cash equivalents	49,576	54,630	(176,928)	(1,811)	(74,533)	162,782
Cash:						
Beginning of year	185,319	234,553	383,369	22,825	826,066	663,284
End of year	$ 234,895	$ 289,183	$ 206,441	$ 21,014	$ 751,533	$ 826,066
Reconciliation of operating income (loss) to net cash provided (used) by operating activities:						
Operating income (loss)	$ (9,255)	$ 13,367	$ (46,870)	$ (50,308)	$ (93,066)	$ 3,908
Adjustments to reconcile operating income (loss) to net cash provided (used) by operating activities:						
Depreciation expense	22,937	18,557	-	476	41,970	79,227
(Increase) decrease in accounts receivable	(1,338)	(2,177)	55,115	-	51,600	(768)
Increase (decrease) in accounts payable	8,966	367	(32,977)	125	(23,519)	(26,784)
Increase (decrease) in accrued payroll and benefits	169	450	(3,963)	(1,071)	(4,415)	363
Increase (decrease) in compensated absences	4,952	4,555	(11,630)	(3,765)	(5,888)	2,971
Increase (decrease) in net pension liability	(2,933)	(1,540)	(132,110)	(5,957)	(142,540)	1,259
Increase (decrease) in net pension expense	2,145	1,702	6,703	8,190	18,740	(2,284)
Increase (decrease) in OPEB liability	26,221	26,220	(31,232)	-	21,209	908
Increase (decrease) in OPEB expense	(1,102)	(1,102)	1,762	-	(442)	-
Increase (decrease) in customer deposits	-	-	(8,030)	-	(8,030)	(250)
Loss on special items	(14,661)	(14,661)	(759)	-	(30,081)	-
Total adjustments	45,356	32,371	(157,121)	(2,002)	(81,396)	54,642
Net cash provided (used) by operating activities	$ 36,101	$ 45,738	$ (203,991)	$ (52,310)	$ (174,462)	$ 58,550

LINCOLN COUNTY, NEVADA
NONMAJOR PIOCHE PUBLIC UTILITY WATER ENTERPRISE FUND
COMPARATIVE STATEMENT OF NET POSITION
June 30, 2020 and 2019

	2020	2019
ASSETS		
Current assets:		
Pooled cash and investments	$ 234,895	$ 164,571
Accounts receivable	21,026	19,688
Interest receivable	188	185
Total current assets	256,109	184,444
Restricted assets:		
Cash	-	20,748
Capital assets:		
Land	4,000	2,000
Property, plant and equipment (net of depreciation)	461,597	472,439
Total capital assets	465,597	474,439
Total assets	721,706	679,631
DEFERRED OUTFLOWS OF RESOURCES		
Deferred pension charge	11,567	11,678
Deferred opeb	2,864	1,762
Total deferred outflows of resources	14,431	13,440
LIABILITIES		
Current liabilities:		
Accounts payable	14,609	5,643
Accrued payroll and benefits	5,226	5,057
Customer deposits	90	90
Accrued compensated absences	6,801	4,750
Total current liabilities	26,726	15,540
Current liabilities payable from restricted assets:		
Revenue bond	-	7,336
Non-current liabilities:		
Accrued compensated absences	6,277	3,376
Net pension liability	86,443	89,376
OPEB liability	57,453	31,232
Total non-current liabilities	150,173	123,984
Total liabilities	176,899	146,860
DEFERRED INFLOWS OF RESOURCES		
Deferred pension charge	10,266	8,232
NET POSITION		
Invested in capital assets, net of related debt	465,597	467,103
Restricted for revenue bond debt service	-	20,748
Unrestricted	83,375	50,128
Total net position	$ 548,972	$ 537,979

LINCOLN COUNTY, NEVADA
NONMAJOR PIOCHE PUBLIC UTILITY WATER ENTERPRISE FUND
SCHEDULE OF REVENUES, EXPENSES, AND CHANGES IN NET POSITION - BUDGET (GAAP BASIS) AND ACTUAL
Year Ended June 30, 2020
(With Comparative Actual Amounts for Year Ended June 30, 2019)

	2020		Variance-Positive	2019
	Budget	Actual	(Negative)	Actual
Operating revenues:				
Water	$ 199,500	$ 191,261	$ (8,239)	$ 177,340
Operating expenses:				
Water:				
Salaries and wages	62,280	57,916	4,364	42,886
Employee benefits	35,212	40,331	(5,119)	22,698
Services and supplies	86,295	79,332	6,963	69,564
Depreciation	32,000	22,937	9,063	29,152
Total operating expenses	215,787	200,516	15,271	164,300
Operating income (loss)	(16,287)	(9,255)	7,032	13,040
Non-operating revenues (expenses):				
Investment income	-	3,082	3,082	1,629
Water capital fees	34,000	21,607	(12,393)	45,782
Water custom fees	5,000	9,209	4,209	9,605
Interest expense	(200)	(1,309)	(1,109)	(909)
Total non-operating revenues (expenses)	38,800	32,589	(6,211)	56,107
Income (loss) before special and extraordinary items	22,513	23,334	821	69,147
Special and extraordinary items:				
Sale of electric operations:				
Capital asset transfers in	-	2,320	2,320	-
Loss on OPEB liability	-	(14,661)	(14,661)	-
Total extraordinary items	-	(12,341)	(12,341)	-
Change in net position	$ 22,513	10,993	$ (11,520)	69,147
Net Position:				
Beginning balance		537,979		468,832
End of year		$ 548,972		$ 537,979

LINCOLN COUNTY, NEVADA
NONMAJOR PIOCHE PUBLIC UTILITY WATER ENTERPRISE FUND
COMPARATIVE STATEMENT OF CASH FLOWS
June 30, 2020 and 2019

	2020	2019
Cash flows from operating activities:		
Cash received from customers	$ 189,923	$ 180,197
Cash paid for services and supplies	(70,366)	(84,691)
Cash paid for salaries and benefits	(83,456)	(64,911)
Net cash provided (used) by operating activities	36,101	30,595
Cash flows from capital and related financing activities:		
Purchases of capital assets	(11,775)	(24,912)
Capital fees	21,607	45,782
Custom fees	9,209	9,605
Debt retirement	(7,336)	(19,839)
Interest paid	(1,309)	(909)
Net cash provided (used) by capital and related financing activities	10,396	9,727
Cash flows from investing activities:		
Investment income	3,079	1,572
Net change in cash and cash equivalents	49,576	41,894
Cash:		
Beginning of year	185,319	143,425
End of year	$ 234,895	$ 185,319
Reconciliation of operating income (loss) to net cash provided (used) by operating activities:		
Operating income (loss)	$ (9,255)	$ 13,040
Adjustments to reconcile operating income (loss) to net cash provided (used) by operating activities:		
Depreciation expense	22,937	29,152
(Increase) decrease in accounts receivable	(1,338)	4,527
Increase (decrease) in accounts payable	8,966	(15,127)
Increase (decrease) in accrued payroll and benefits	169	(42)
Increase (decrease) in compensated absences	4,952	189
Increase (decrease) in net pension liability	(2,933)	377
Increase (decrease) in net pension expense	2,145	(153)
Increase (decrease) in OPEB liability	26,221	302
Increase (decrease) in OPEB expense	(1,102)	-
Increase (decrease) in customer deposits	-	(1,670)
Loss on special items	(14,661)	-
Total adjustments	45,356	17,555
Net cash provided (used) by operating activities	$ 36,101	$ 30,595

LINCOLN COUNTY, NEVADA
NONMAJOR PIOCHE PUBLIC UTILITY SEWER ENTERPRISE FUND
COMPARATIVE STATEMENT OF NET POSITION
June 30, 2020 and 2019

	2020	2019
ASSETS		
Current assets:		
Pooled cash and investments	$ 277,693	$ 223,063
Accounts receivable	12,869	10,692
Interest receivable	242	259
Total current assets	290,804	234,014
Restricted assets:		
Cash	11,490	11,490
Capital assets:		
Land	10,000	10,000
Property, plant and equipment (net of depreciation)	529,272	547,509
Total capital assets	539,272	557,509
Total assets	841,566	803,013
DEFERRED OUTFLOWS OF RESOURCES		
Deferred pension charge	5,600	6,874
Deferred opeb	2,864	1,762
Total deferred outflows of resources	8,464	8,636
LIABILITIES		
Current liabilities:		
Accounts payable	1,268	901
Accrued payroll and benefits	3,188	2,738
Accrued compensated absences	4,533	2,250
Accrued interest payable	1,288	1,312
Total current liabilities	10,277	7,201
Current liabilities payable from restricted assets:		
Revenue bond	3,440	3,294
Non-current liabilities:		
Accrued compensated absences	4,185	1,913
Net pension liability	44,149	45,689
OPEB liability	57,453	31,233
Revenue bond	174,049	177,489
Total non-current liabilities	279,836	256,324
Total liabilities	293,553	266,819
DEFERRED INFLOWS OF RESOURCES		
Deferred pension charge	5,488	5,060
NET POSITION		
Invested in capital assets, net of related debt	361,783	376,726
Restricted for revenue bond debt service	11,490	11,490
Unrestricted	177,716	151,554
Total net position	$ 550,989	$ 539,770

LINCOLN COUNTY, NEVADA
NONMAJOR PIOCHE PUBLIC UTILITY SEWER ENTERPRISE FUND
SCHEDULE OF REVENUES, EXPENSES, AND CHANGES IN NET POSITION - BUDGET (GAAP BASIS) AND ACTUAL
Year Ended June 30, 2020
(With Comparative Actual Amounts for Year Ended June 30, 2019)

	2020		Variance-Positive	2019
	Budget	Actual	(Negative)	Actual
Operating revenues:				
Sewer	$ 90,500	$ 106,758	$ 16,258	$ 94,857
Operating expenses:				
Sewer				
Salaries and wages	37,430	26,810	10,620	24,680
Employee benefits	22,256	24,526	(2,270)	13,297
Services and supplies	29,194	23,498	5,696	29,308
Depreciation	27,000	18,557	8,443	23,379
Total operating expenses	115,880	93,391	22,489	90,664
Operating income (loss)	(25,380)	13,367	38,747	4,193
Non-operating revenues (expenses):				
Investment income	-	3,955	3,955	2,285
Sewer capital fees	25,000	15,974	(9,026)	23,489
Sewer custom fees	-	114	114	1,266
Interest expense	(7,874)	(7,850)	24	(7,990)
Total non-operating revenues (expenses)	17,126	12,193	(4,933)	19,050
Income (loss) before special and extraordinary items	(8,254)	25,560	33,814	23,243
Special and extraordinary items:				
Sale of electric operations:				
Capital asset transfers in	-	320	320	-
Loss on OPEB liability	-	(14,661)	(14,661)	-
Total extraordinary items	-	(14,341)	(14,341)	-
Change in net position	$ (8,254)	11,219	$ 19,473	23,243
Net Position:				
Beginning balance		539,770		516,527
End of year		$ 550,989		$ 539,770

LINCOLN COUNTY, NEVADA
NONMAJOR PIOCHE PUBLIC UTILITY SEWER ENTERPRISE FUND
COMPARATIVE STATEMENT OF CASH FLOWS
June 30, 2020 and 2019

	2020	2019
Cash flows from operating activities:		
Cash received from customers	$ 104,581	$ 94,933
Cash paid for services and supplies	(23,131)	(29,771)
Cash paid for salaries and benefits	(35,712)	(37,178)
Net cash provided (used) by operating activities	45,738	27,984
Cash flows from capital and related financing activities:		
Capital fees	15,974	23,489
Custom fees	114	1,266
Debt retirement	(3,294)	(3,154)
Interest paid	(7,874)	(8,014)
Net cash provided (used) by capital and related financing activities	4,920	13,587
Cash flows from investing activities:		
Investment income	3,972	2,165
Net change in cash and cash equivalents	54,630	43,736
Cash:		
Beginning of year	234,553	190,817
End of year	$ 289,183	$ 234,553
Reconciliation of operating income (loss) to net cash provided (used) by operating activities:		
Operating income (loss)	$ 13,367	$ 4,193
Adjustments to reconcile operating income (loss) to net cash provided (used) by operating activities:		
Depreciation expense	18,557	23,379
(Increase) decrease in accounts receivable	(2,177)	76
Increase (decrease) in accounts payable	367	(463)
Increase (decrease) in accrued payroll and benefits	450	(44)
Increase (decrease) in compensated absences	4,555	96
Increase (decrease) in net pension liability	(1,540)	124
Increase (decrease) in net pension expense	1,702	319
Increase (decrease) in OPEB liability	26,220	304
Increase (decrease) in OPEB expense	(1,102)	-
Loss on special items	(14,661)	-
Total adjustments	32,371	23,791
Net cash provided (used) by operating activities	$ 45,738	$ 27,984

LINCOLN COUNTY, NEVADA
NONMAJOR PIOCHE PUBLIC UTILITY ELECTRIC ENTERPRISE FUND
COMPARATIVE STATEMENT OF NET POSITION
June 30, 2020 and 2019

	2020	2019
ASSETS		
Current assets:		
Pooled cash and investments	$ 206,441	$ 383,369
Accounts receivable	-	55,115
Interest receivable	392	268
Total current assets	206,833	438,752
Capital assets:		
Land	-	2,000
Property, plant and equipment (net of depreciation)	-	194,434
Total capital assets	-	196,434
Total assets	206,833	635,186
DEFERRED OUTFLOWS OF RESOURCES		
Deferred pension charge	-	20,745
Deferred OPEB	-	1,762
Total deferred outflows of resources	-	22,507
LIABILITIES		
Current liabilities:		
Accounts payable	-	32,977
Accrued payroll and benefits	1,127	5,090
Customer deposits	-	8,030
Accrued compensated absences	-	7,180
Total current liabilities	1,127	53,277
Non-current liabilities:		
Accrued compensated absences	-	4,450
Net pension liability	-	132,110
OPEB liability	-	31,232
Total non-current liabilities	-	167,792
Total liabilities	1,127	221,069
DEFERRED INFLOWS OF RESOURCES		
Deferred pension charge	-	14,042
NET POSITION		
Invested in capital assets, net of related debt	-	196,434
Unrestricted	205,706	226,148
Total net position	$ 205,706	$ 422,582

LINCOLN COUNTY, NEVADA
NONMAJOR PIOCHE PUBLIC UTILITY ELECTRIC ENTERPRISE FUND
SCHEDULE OF REVENUES, EXPENSES, AND CHANGES IN NET POSITION - BUDGET (GAAP BASIS) AND ACTUAL
Year Ended June 30, 2020
(With Comparative Actual Amounts for Year Ended June 30, 2019)

	2020 Budget	2020 Actual	Variance-Positive (Negative)	2019 Actual
Operating revenues:				
Electricity	$ 701,500	$ 260,233	$ (441,267)	$ 794,658
Operating expenses:				
Electricity:				
Salaries and wages	84,347	44,961	39,386	73,023
Employee benefits	43,948	22,669	21,279	35,605
Services and supplies	581,681	239,473	342,208	620,444
Depreciation	40,000	-	40,000	26,221
Total operating expenses	749,976	307,103	442,873	755,293
Operating income (loss)	(48,476)	(46,870)	1,606	39,365
Non-operating revenues (expenses):				
Investment income	-	6,404	6,404	2,360
Electricity capital fees	60,000	19,031	(40,969)	66,361
Electricity custom fees	5,000	1,752	(3,248)	14,538
Total non-operating revenues (expenses)	65,000	27,187	(37,813)	83,259
Change in net position before special items	16,524	(19,683)	(36,207)	122,624
Special items:				
Sale of electric operations:				
Capital asset transfer out	-	(2,640)	(2,640)	-
Loss on disposal of assets	-	(349,430)	(349,430)	-
Gain on net pension liabilites	-	125,407	125,407	-
Gain on OPEB liabilities	-	29,470	29,470	-
Total special items	-	(197,193)	(197,193)	-
Change in net position	$ 16,524	(216,876)	$ (233,400)	122,624
Net Position:				
Beginning of year		422,582		299,958
End of year		$ 205,706		$ 422,582

LINCOLN COUNTY, NEVADA
NONMAJOR PIOCHE PUBLIC UTILITY ELECTRIC ENTERPRISE FUND
COMPARATIVE STATEMENT OF CASH FLOWS
June 30, 2020 and 2019

	2020	2019
Cash flows from operating activities:		
Cash received from customers	$ 307,318	$ 790,707
Cash paid for services and supplies	(272,450)	(631,175)
Cash paid for salaries and benefits	(238,859)	(108,899)
Net cash provided (used) by operating activities	(203,991)	50,633
Cash flows from capital and related financing activities:		
Purchases of capital assets	-	(46,370)
Capital fees	19,031	66,361
Custom fees	1,752	14,538
Net cash provided (used) by capital and related financing activities	20,783	34,529
Cash flows from investing activities:		
Investment income	6,280	2,257
Net change in cash and cash equivalents	(176,928)	87,419
Cash:		
Beginning of year	383,369	295,950
End of year	$ 206,441	$ 383,369
Reconciliation of operating income (loss) to net cash provided (used) by operating activities:		
Operating income (loss)	$ (46,870)	$ 39,365
Adjustments to reconcile operating income (loss) to net cash provided (used) by operating activities:		
Depreciation expense	-	26,221
(Increase) decrease in accounts receivable	55,115	(5,371)
Increase (decrease) in accounts payable	(32,977)	(10,731)
Increase (decrease) in accrued payroll and benefits	(3,963)	(400)
Increase (decrease) in compensated absences	(11,630)	269
Increase (decrease) in net pension liability	(132,110)	499
Increase (decrease) in net pension expense	6,703	(941)
Increase (decrease) in OPEB liability	(31,232)	302
Increase (decrease) in OPEB pension expense	1,762	-
Increase (decrease) in customer deposits	(8,030)	1,420
Loss on special items	(759)	-
Total adjustments	(156,362)	11,268
Net cash provided (used) by operating activities	$ (203,232)	$ 50,633

LINCOLN COUNTY, NEVADA
NONMAJOR BUILDING DEPARTMENT ENTERPRISE FUND
COMPARATIVE STATEMENT OF NET POSITION
June 30, 2020 and 2019

	2020	2019
ASSETS		
Current assets:		
Pooled cash and investments	$ 21,014	$ 22,825
Interest receivable	29	46
Capital assets:		
Property and equipment (net of depreciation)	-	476
Total assets	21,043	23,347
DEFERRED OUTFLOWS OF RESOURCES		
Deferred pension charge	19,101	19,809
LIABILITIES		
Current liabilities:		
Accounts payable	261	136
Accrued payroll and benefits	5,849	6,920
Accrued compensated absences	5,175	7,680
Total current liabilities	11,285	14,736
Non-current liabilities:		
Accrued compensated absences	3,450	4,710
Net pension liability	94,488	100,445
Total non-current liabilities	97,938	105,155
Total liabilities	109,223	119,891
DEFERRED INFLOWS OF RESOURCES		
Deferred pension charge	20,318	12,836
NET POSITION		
Invested in capital assets, net of related debt	-	476
Unrestricted	(89,397)	(90,047)
Total net position	$ (89,397)	$ (89,571)

LINCOLN COUNTY, NEVADA
NONMAJOR BUILDING DEPARTMENT ENTERPRISE FUND
SCHEDULE OF REVENUES, EXPENSES, AND CHANGES IN NET POSITION - BUDGET (GAAP BASIS) AND ACTUAL
Year Ended June 30, 2020
(With Comparative Actual Amounts for Year Ended June 30, 2019)

	2020 Budget	2020 Actual	Variance-Positive (Negative)	2019 Actual
Operating revenues:				
Charges for services	$ 20,000	$ 22,144	$ 2,144	$ 24,169
Operating expenses:				
Public works:				
Salaries and wages	53,909	36,431	17,478	44,023
Employee benefits	17,160	31,863	(14,703)	28,843
Service and supplies	11,160	3,682	7,478	3,518
Depreciation	1,000	476	524	475
Total operating expenses	83,229	72,452	10,777	76,859
Operating income (loss)	(63,229)	(50,308)	12,921	(52,690)
Non-operating revenues (expenses):				
Investment income	-	482	482	412
Operating transfers in	50,000	50,000	-	40,000
Total non-operating revenues (expenses)	50,000	50,482	482	40,412
Change in net position	$ (13,229)	174	13,403	(12,278)
Net Position:				
Beginning balance		(89,571)		(77,293)
End of year		$ (89,397)		$ (89,571)

LINCOLN COUNTY, NEVADA
NONMAJOR BUILDING DEPARTMENT ENTERPRISE FUND
COMPARATIVE STATEMENT OF CASH FLOWS
Years Ended June 30, 2020 and 2019

	2020	2019
Cash flows from operating activities:		
Cash received from customers	$ 22,144	$ 24,169
Cash paid for services and supplies	(3,557)	(3,981)
Cash paid for salaries and benefits	(70,897)	(70,850)
Net cash provided (used) by operating activities	(52,310)	(50,662)
Cash flows from noncapital financing activities:		
Operating transfers in	50,000	40,000
Cash flows from investing activities:		
Investment income	499	395
Net change in cash and cash equivalents	(1,811)	(10,267)
Cash:		
Beginning of year	22,825	33,092
End of year	$ 21,014	$ 22,825
Reconciliation of operating income to net cash provided (used) by operating activities:		
Operating income (loss)	$ (50,308)	$ (52,690)
Adjustments to reconcile operating income to net cash provided (used) by operating activities:		
Depreciation expense	476	475
Increase (decrease) in accounts payable	125	(463)
Increase (decrease) in accrued payroll and benefits	(1,071)	849
Increase (decrease) in compensated absences	(3,765)	2,417
Increase (decrease) in net pension liability	(5,957)	259
Increase (decrease) in net pension expense	8,190	(1,509)
Total adjustments	(2,002)	2,028
Net cash provided (used) by operating activities	$ (52,310)	$ (50,662)

AGENCY FUNDS

Agency funds are used to account for assets held by the government as an agent for individual, private organizations, other governments, and/or other funds.

The Tax Fund is used to account for revenues received from County Treasurer sales of property to satisfy delinquent property taxes. Revenues collected in excess of delinquent taxes and penalties are held for two years. If no claim is made for the monies, the monies may be transferred to the General Fund.

The following funds are used to account for property taxes and other revenues collected by the County on behalf of other government entities. The revenues collected are remitted to the government entities on a periodic basis. State, Caliente City, Caliente City Capital Projects, School General, School Debt Service, Pahranagat Valley Fire District, Pioche Fire District, Pioche Fire District Capital Projects, Television District, Panaca Fire Protection District, Coyote Springs GID, Hospital, Lincoln County Fire Protection District, Pioche Fire District Emergency, Southeastern Lincoln County Habitat Conservation Plan GID, and Lincoln County Fire Protection District Emergency Funds.

The Public Land Trust, Range, and the Fish and Game Funds are used to account for revenues received and expenditures made on behalf of others.

LINCOLN COUNTY, NEVADA
AGENCY FUNDS
COMBINING STATEMENT OF NET POSITION
June 30, 2020
(With Comparative Totals for June 30, 2019)

	Tax Trust	State	Caliente City	Caliente City Capital Projects	Fish and Game	Range	School General	School Debt Service	Lincoln County TV District	Pahranagat Fire District	Public Land	Hospital
ASSETS												
Pooled cash and investments	$ -	$ 43,783	$ 2,114	$ 8,412	$ 3,433	$ 28,083	$ 6,674	$ 161,012	$ 479	$ 4,265	$ 208	$ 2,383
Interest receivable	-	-	23	-	-	110	-	1,025	-	20	-	-
Taxes receivable	-	6,066	2,469	-	-	-	23,348	6,946	-	1,761	-	8,337
Due from other governments	-	-	12	-	-	-	10	3	-	10,377	-	3
Total assets	$ -	$ 49,849	$ 4,618	$ 8,412	$ 3,433	$ 28,193	$ 30,032	$ 168,986	$ 479	$ 16,423	$ 208	$ 10,723
LIABILITIES												
Amount held for others	$ -	$ 44,548	$ 2,490	$ 8,412	$ 3,433	$ 28,193	$ 9,622	$ 162,915	$ 479	$ 14,698	$ 208	$ 3,436
Unavailable revenue - taxes	-	5,301	2,128	-	-	-	20,410	6,071	-	1,725	-	7,287
Total liabilities	$ -	$ 49,849	$ 4,618	$ 8,412	$ 3,433	$ 28,193	$ 30,032	$ 168,986	$ 479	$ 16,423	$ 208	$ 10,723

LINCOLN COUNTY, NEVADA
AGENCY FUNDS
COMBINING STATEMENT OF NET POSITION
June 30, 2020
(With Comparative Totals for June 30, 2019)

	Panaca Fire Protection District	Pioche Fire District	Pioche Fire District Capital Projects	Pioche Fire Emergency	Coyote Springs GID	SB 371	SLCHCP GID	Lincoln County Fire Protection District	Lincoln County Fire Protection District Emergency	Totals 2020	Totals 2019
ASSETS											
Pooled cash and investments	$ 30,343	$ 68,844	$ 1,553	$ 6,350	$ -	$ 50	$ 172,606	$ 315,598	$ 74,456	$ 930,646	$ 1,243,099
Interest receivable	178	404	20	105	-	-	2,072	5,548	1,076	10,581	10,199
Taxes receivable	1,278	771	-	-	-	-	2	2,167	-	53,145	58,988
Due from other governments	-	5,876	-	-	-	-	-	43,675	-	59,956	48,483
Total assets	$ 31,799	$ 75,895	$ 1,573	$ 6,455	$ -	$ 50	$ 174,680	$ 366,988	$ 75,532	$ 1,054,328	$ 1,360,769
LIABILITIES											
Amount held for others	$ 30,558	$ 75,124	$ 1,573	$ 6,455	$ -	$ 50	$ 174,678	$ 364,828	$ 75,532	$ 1,007,232	$ 1,314,135
Unavailable revenue - taxes	1,241	771	-	-	-	-	2	2,160	-	47,096	46,634
Total liabilities	$ 31,799	$ 75,895	$ 1,573	$ 6,455	$ -	$ 50	$ 174,680	$ 366,988	$ 75,532	$ 1,054,328	$ 1,360,769

LINCOLN COUNTY, NEVADA
COMBINING STATEMENT OF CHANGES IN ASSETS
AND LIABILITIES - ALL AGENCY FUNDS
Year Ended June 30, 2020

	Balance July 1, 2019	Additions	Deductions	Balance June 30, 2020
Tax Trust				
Assets:				
Pooled cash and investments	$ 24,162	$ 535	$ 24,697	$ -
Interest receivable	51	-	51	-
Total assets	$ 24,213	$ 535	$ 24,748	$ -
Liabilities:				
Amount held for others	$ 24,213	$ 535	$ 24,748	$ -
State				
Assets:				
Pooled cash and investments	$ 71,613	$ 672,299	$ 700,129	$ 43,783
Taxes receivable	6,677	6,066	6,677	6,066
Total assets	$ 78,290	$ 678,365	$ 706,806	$ 49,849
Liabilities:				
Amount held for others	$ 72,987	$ 673,064	$ 701,503	$ 44,548
Unavailable revenue - taxes	5,303	5,301	5,303	5,301
Total liabilities	$ 78,290	$ 678,365	$ 706,806	$ 49,849
Caliente City				
Assets:				
Pooled cash and investments	$ 9,897	$ 148,970	$ 156,753	$ 2,114
Interest receivable	27	23	27	23
Taxes receivable	3,157	2,469	3,157	2,469
Due from other governments	-	12	-	12
Total assets	$ 13,081	$ 151,474	$ 159,937	$ 4,618
Liabilities:				
Amount held for others	$ 10,708	$ 149,346	$ 157,564	$ 2,490
Unavailable revenue - taxes	2,373	2,128	2,373	2,128
Total liabilities	$ 13,081	$ 151,474	$ 159,937	$ 4,618
Caliente City Capital Projects				
Assets:				
Pooled cash and investments	$ 243	$ 8,169	$ -	$ 8,412
Liabilities:				
Amount held for others	$ 243	$ 8,169	$ -	$ 8,412
Fish and Game				
Assets:				
Pooled cash and investments	$ 879	$ 4,589	$ 2,035	$ 3,433
Liabilities:				
Amount held for others	$ 879	$ 4,589	$ 2,035	$ 3,433

LINCOLN COUNTY, NEVADA
COMBINING STATEMENT OF CHANGES IN ASSETS
AND LIABILITIES - ALL AGENCY FUNDS (CONTINUED)
Year Ended June 30, 2020

	Balance July 1, 2019	Additions	Deductions	Balance June 30, 2020
Range				
Assets:				
Pooled cash and investments	$ 13,799	$ 61,106	$ 46,822	$ 28,083
Interest receivable	100	110	100	110
Due from other governments	28,635	-	28,635	-
Total assets	$ 42,534	$ 61,216	$ 75,557	$ 28,193
Liabilities:				
Amount held for others	$ 42,534	$ 61,216	$ 75,557	$ 28,193
School General				
Assets:				
Pooled cash and investments	$ 209,072	$ 1,765,303	$ 1,967,701	$ 6,674
Taxes receivable	25,724	23,348	25,724	23,348
Due from other governments	1	10	1	10
Total assets	$ 234,797	$ 1,788,661	$ 1,993,426	$ 30,032
Liabilities:				
Amount held for others	$ 214,390	$ 1,768,251	$ 1,973,019	$ 9,622
Unavailable revenue - taxes	20,407	20,410	20,407	20,410
Total liabilities	$ 234,797	$ 1,788,661	$ 1,993,426	$ 30,032
School Debt Service				
Assets:				
Pooled cash and investments	$ 83,967	$ 536,002	$ 458,957	$ 161,012
Interest receivable	1,126	1,025	1,126	1,025
Taxes receivable	7,650	6,946	7,650	6,946
Due from other governments	-	3	-	3
Total assets	$ 92,743	$ 543,976	$ 467,733	$ 168,986
Liabilities:				
Amount held for others	$ 86,673	$ 537,905	$ 461,663	$ 162,915
Unavailable revenue - taxes	6,070	6,071	6,070	6,071
Total liabilities	$ 92,743	$ 543,976	$ 467,733	$ 168,986
Lincoln County TV District				
Assets:				
Pooled cash and investments	$ 3,187	$ 52,477	$ 55,185	$ 479
Liabilities:				
Amount held for others	$ 3,187	$ 52,477	$ 55,185	$ 479

LINCOLN COUNTY, NEVADA
COMBINING STATEMENT OF CHANGES IN ASSETS
AND LIABILITIES - ALL AGENCY FUNDS (CONTINUED)
Year Ended June 30, 2020

	Balance July 1, 2019	Additions	Deductions	Balance June 30, 2020
Pahranagat Fire District				
Assets:				
Pooled cash and investments	$ 14,639	$ 124,710	$ 135,084	$ 4,265
Interest receivable	39	20	39	20
Taxes receivable	1,012	1,761	1,012	1,761
Due from other governments	9,565	10,377	9,565	10,377
Total assets	$ 25,255	$ 136,868	$ 145,700	$ 16,423
Liabilities:				
Amount held for others	$ 24,517	$ 135,881	$ 145,700	$ 14,698
Unavailable revenue - taxes	738	987	-	1,725
Total liabilities	$ 25,255	$ 136,868	$ 145,700	$ 16,423
Public Land				
Assets:				
Pooled cash and investments	$ 208	$ -	$ -	$ 208
Liabilities:				
Amount held for others	$ 208	$ -	$ -	$ 208
Hospital				
Assets:				
Pooled cash and investments	$ 69,265	$ 625,231	$ 692,113	$ 2,383
Taxes receivable	9,188	8,337	9,188	8,337
Due from other governments	-	3	-	3
Total assets	$ 78,453	$ 633,571	$ 701,301	$ 10,723
Liabilities:				
Amount held for others	$ 71,165	$ 626,284	$ 694,013	$ 3,436
Unavailable revenue - taxes	7,288	7,287	7,288	7,287
Total liabilities	$ 78,453	$ 633,571	$ 701,301	$ 10,723
Panaca Fire Protection District				
Assets:				
Pooled cash and investments	$ 9,112	$ 53,080	$ 31,849	$ 30,343
Interest receivable	194	178	194	178
Taxes receivable	1,826	1,278	1,826	1,278
Total assets	$ 11,132	$ 54,536	$ 33,869	$ 31,799
Liabilities:				
Amount held for others	$ 9,717	$ 53,295	$ 32,454	$ 30,558
Unavailable revenue - taxes	1,415	1,241	1,415	1,241
Total liabilities	$ 11,132	$ 54,536	$ 33,869	$ 31,799

LINCOLN COUNTY, NEVADA
COMBINING STATEMENT OF CHANGES IN ASSETS
AND LIABILITIES - ALL AGENCY FUNDS (CONTINUED)
Year Ended June 30, 2020

	Balance July 1, 2019	Additions	Deductions	Balance June 30, 2020
Pioche Fire District				
Assets:				
Pooled cash and investments	$ 50,968	$ 70,179	$ 52,303	$ 68,844
Interest receivable	466	404	466	404
Taxes receivable	592	771	592	771
Due from other governments	10,282	5,876	10,282	5,876
Total assets	$ 62,308	$ 77,230	$ 63,643	$ 75,895
Liabilities:				
Amount held for others	$ 61,719	$ 76,459	$ 63,054	$ 75,124
Unavailable revenue - taxes	589	771	589	771
Total liabilities	$ 62,308	$ 77,230	$ 63,643	$ 75,895
Pioche Fire District Capital Projects				
Assets:				
Pooled cash and investments	$ 1,546	$ 7	$ -	$ 1,553
Interest receivable	27	20	27	20
Total assets	$ 1,573	$ 27	$ 27	$ 1,573
Liabilities:				
Amount held for others	$ 1,573	$ 27	$ 27	$ 1,573
Pioche Fire Emergency				
Assets:				
Pooled cash and investments	$ 5,509	$ 841	$ -	$ 6,350
Interest receivable	65	105	65	105
Total assets	$ 5,574	$ 946	$ 65	$ 6,455
Liabilities:				
Amount held for others	$ 5,574	$ 946	$ 65	$ 6,455
Coyote Springs GID				
Assets:				
Pooled cash and investments	$ 150,297	$ 788,999	$ 939,296	$ -
Interest receivable	1,844	-	1,844	-
Total assets	$ 152,141	$ 788,999	$ 941,140	$ -
Liabilities:				
Amount held for others	$ 152,141	$ 788,999	$ 941,140	$ -
SB 371				
Assets:				
Pooled cash and investments	$ 75	$ 400	$ 425	$ 50
Liabilities:				
Amount held for others	$ 75	$ 400	$ 425	$ 50

LINCOLN COUNTY, NEVADA
COMBINING STATEMENT OF CHANGES IN ASSETS
AND LIABILITIES - ALL AGENCY FUNDS (CONTINUED)
Year Ended June 30, 2020

	Balance July 1, 2019	Additions	Deductions	Balance June 30, 2020
Southeastern Lincoln County Habitat Conservation Plan GID (SLCHCP)				
Assets:				
Pooled cash and investments	$ 160,145	$ 21,526	$ 9,065	$ 172,606
Interest receivable	2,721	2,072	2,721	2,072
Taxes receivable	-	2	-	2
Total assets	$ 162,866	$ 23,600	$ 11,786	$ 174,680
Liabilities:				
Amount held for others	$ 162,866	$ 23,598	$ 11,786	$ 174,678
Unavailable revenue - taxes	-	2	-	2
Total liabilities	$ 162,866	$ 23,600	$ 11,786	$ 174,680
Lincoln County Fire Protection District				
Assets:				
Pooled cash and investments	$ 314,504	$ 370,510	$ 369,416	$ 315,598
Interest receivable	3,019	5,548	3,019	5,548
Taxes receivable	3,162	2,167	3,162	2,167
Due from other governments	-	43,675	-	43,675
Total assets	$ 320,685	$ 421,900	$ 375,597	$ 366,988
Liabilities:				
Amount held for others	$ 318,234	$ 419,740	$ 373,146	$ 364,828
Unavailable revenue - taxes	2,451	2,160	2,451	2,160
Total liabilities	$ 320,685	$ 421,900	$ 375,597	$ 366,988
Lincoln County Fire Protection District Emergency Fund				
Assets:				
Pooled cash and investments	$ 50,012	$ 24,444	$ -	$ 74,456
Interest receivable	520	1,076	520	1,076
Total assets	$ 50,532	$ 25,520	$ 520	$ 75,532
Liabilities:				
Amount held for others	$ 50,532	$ 25,520	$ 520	$ 75,532
Total all funds				
Assets:				
Pooled cash and investments	$ 1,243,099	$ 5,329,377	$ 5,641,830	$ 930,646
Interest receivable	10,199	10,581	10,199	10,581
Taxes receivable	58,988	53,145	58,988	53,145
Due from other governments	48,483	59,956	48,483	59,956
Total assets	$ 1,360,769	$ 5,453,059	$ 5,759,500	$ 1,054,328
Liabilities:				
Amount held for others	$ 1,314,135	$ 5,406,701	$ 5,713,604	$ 1,007,232
Unavailable revenue - taxes	46,634	46,358	45,896	47,096
Total liabilities	$ 1,360,769	$ 5,453,059	$ 5,759,500	$ 1,054,328

DANIEL C. McARTHUR, LTD.
Certified Public Accountant

Quail Park III • 501 So. Rancho Dr., Ste. E-30 • Las Vegas, NV 89106 • (702) 385-1899 • FAX (702) 385-9619

INDEPENDENT AUDITOR'S REPORT ON INTERNAL CONTROL OVER FINANCIAL REPORTING AND ON COMPLIANCE AND OTHER MATTERS BASED ON AN AUDIT OF FINANCIAL STATEMENTS PERFORMED IN ACCORDANCE WITH *GOVERNMENT AUDITING STANDARDS*

Honorable Board of County Commissioners
Lincoln County, Nevada
Pioche, Nevada

We have audited, in accordance with the auditing standards generally accepted in the United States of America and the standards applicable to financial audits contained in *Government Auditing Standards*, issued by the Comptroller General of the United States, the financial statements of the governmental activities, the business-type activities, each major fund, and the aggregate remaining fund information of Lincoln County, Nevada (the County), as of and for the year ended June 30, 2020, and the related notes to the financial statements, which collectively comprise the County's basic financial statements, and have issued our report thereon dated November 25, 2020.

Internal Control over Financial Reporting

In planning and performing our audit of the financial statements, we considered the County's internal control over financial reporting (internal control) as a basis for designing audit procedures that are appropriate in the circumstances for the purpose of expressing our opinions on the financial statements, but not for the purpose of expressing an opinion on the effectiveness of the County's internal control. Accordingly, we do not express an opinion on the effectiveness of the County's internal control.

A *deficiency in internal control* exists when the design or operation of a control does not allow management or employees, in the normal course of performing their assigned functions, to prevent, or detect and correct misstatements on a timely basis. A *material weakness* is a deficiency, or a combination of deficiencies, in internal control, such that there is a reasonable possibility that a material misstatement of the entity's financial statements will not be prevented, or detected and corrected on a timely basis. A *significant deficiency* is a deficiency, or a combination of deficiencies, in internal control that is less severe than a material weakness, yet important enough to merit attention by those charged with governance.

Our consideration of internal control was for the limited purpose described in the first paragraph of this section and was not designed to identify all deficiencies in internal control that might be material weaknesses or, significant deficiencies. Given these limitations, during our audit we did not identify any deficiencies in internal control that we consider to be material weaknesses. However, material weaknesses may exist that have not been identified.

Compliance and Other Matters

As part of obtaining reasonable assurance about whether the County's financial statements are free from material misstatement, we performed tests of its compliance with certain provisions of laws, regulations, contracts, and grant agreements, noncompliance with which could have a direct and material effect on the financial statements. However, providing an opinion on compliance with those provisions was not an objective of our audit, and accordingly, we do not express such an opinion. The results of our tests disclosed no instances of noncompliance or other matters that are required to be reported under *Government Auditing Standards.*

Purpose of this Report

The purpose of this report is solely to describe the scope of our testing of internal control and compliance and the results of that testing, and not to provide an opinion on the effectiveness of the entity's internal control or on compliance. This report is an integral part of an audit performed in accordance with *Government Auditing Standards* in considering the entity's internal control and compliance. Accordingly, this communication is not suitable for any other purpose.

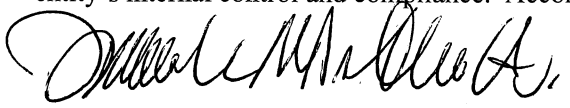

Las Vegas, Nevada
November 25, 2020

DANIEL C. McARTHUR, LTD.
Certified Public Accountant

Quail Park III • 501 So. Rancho Dr., Ste. E-30 • Las Vegas, NV 89106 • (702) 385-1899 • FAX (702) 385-9619

AUDITOR'S COMMENTS

Honorable Board of County Commissioners
Lincoln County, Nevada
Pioche, Nevada

In connection with our audit of the financial statements of the governmental activities, the business-type activities, each major fund, and the aggregate remaining fund information of Lincoln County, Nevada (the County) as of and for the year ended June 30, 2020, and the related notes to the financial statements, nothing came to our attention that caused us to believe that the County failed to comply with the specific requirements of Nevada Revised Statutes referenced below insofar as they relate to accounting matters except as noted below. However, our audit was not directed primarily toward obtaining knowledge of such noncompliance. Accordingly, had we performed additional procedures, other matters may have come to our attention regarding the County's noncompliance with the requirements of Nevada Revised Statutes noted below, insofar as they relate to accounting matters.

CURRENT YEAR STATUTE COMPLIANCE

Expenditures in Excess of Appropriations

Per NRS 354.626, the County is required to report expenditures that exceeded budgeted appropriations at the function level for the General Fund, Special Revenue Funds, and Capital Project Funds. Enterprise funds may not exceed budget appropriations at the fund level. For the year ending June 30, 2020, the County had the following expenditures over appropriations that are required to be reported.

Alamo Town – Public works function	$	339
Airport – Public works function	$	952
Detention Center Enterprise Fund	$	39,303

The over expenditures in the funds relate to expenses that came in after year end that caused the functions to go over budget.

Deficit Fund Balance/Net Position

Legal Aid Services Fund	$ 3,195
Detention Center Enterprise Fund	$ 2,503,285
Building Department Enterprise Fund	$ 89,397

The deficit net position of the Detention Center and Building Department Enterprise funds are due to the individual fund's proportionate share of the net pension liability of the Public Employees' Retirement System of the State of Nevada of $3,126,874 and $94,488.

PROGRESS ON PRIOR YEAR STATUTE COMPLIANCE

The County had similar findings in the current year as listed above.

CURRENT YEAR RECOMMENDATIONS

We noted no material weakness and reported no significant deficiencies in internal controls.

PRIOR YEAR RECOMMENDATIONS

We noted no material weakness and reported no significant deficiencies in internal controls in the prior year.

NEVADA REVISED STATUTE 354.6115 - STABILIZATION FUND

The County created a stabilization fund in accordance with Nevada Revised Statute 354.6115, "Fund to stabilize operations of local government and mitigate effects of natural disaster". The fund is reported on pages 236 and 237 of the financial statements as an "internally reported (budgetary basis) fund reported as part of the General Fund for external reporting purposes. Compliance with Nevada Revised Statutes is contained in Note C1 to the financial statements.

NEVADA REVISED STATUTE 354.5989 – BUSINESS LICENSES

Nevada Revised Statutes 354.624.4(a) requires a schedule of all fees imposed by the County which are subject to the provisions of NRS 354.5989 be addressed by the independent auditor. During the year ended June 30, 2020, the County did not raise fees on business licenses subject to the limitation of NRS 354.5989. The County business fee is $40.

NEVADA REVISED STATUTE 354.59815 – CAPITAL PROJECTS FUND (Special Ad Valorem)

Capital Improvements Fund

The County established the Capital Improvements Fund in accordance with Nevada Revised Statutes 354.59815. Compliance with Nevada Revised Statutes is contained in Note C1 to the financial statements. The County does not plan to accumulate money in the fund. Projects funded during the year were as follows:

Intergovernmental – Payment to City	$ 8,169
Transfer to the Pioche Town Capital Projects fund	$ 3,502
Transfer to the Alamo Town Capital Projects fund	$ 2,334
Transfer to the Panaca Town Capital Projects fund	$ 4,667
Transfer to the Vehicle Capital Projects fund used to purchase vehicles	$ 110,000

Pioche Town Capital Projects Fund

The County established the Pioche Town Capital Projects Fund in accordance with Nevada Revised Statutes 354.59815. Compliance with Nevada Revised Statutes is contained in Note C1 to the financial statements. The County does not plan to accumulate money in the fund. Projects funded during the year were as follows:

Maintenance equipment	$ 3,752

Panaca Town Capital Projects Fund

The County established the Panaca Town Capital Projects Fund in accordance with Nevada Revised Statutes 354.59815. Compliance with Nevada Revised Statutes is contained in Note C1 to the financial statements. The County does not plan to accumulate money in the fund. There were no projects funded during the year.

Alamo Town Capital Projects Fund

The County established the Alamo Town Capital Projects Fund in accordance with Nevada Revised Statutes 354.59815. Compliance with Nevada Revised Statutes is contained in Note C1 to the financial statements. The County does not plan to accumulate money in the fund. There were no projects funded during the year.

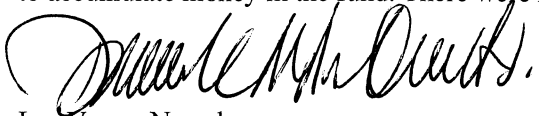

Las Vegas, Nevada
November 25, 2020

LINCOLN COUNTY, NEVADA

REPORT ON FINANCIAL STATEMENTS WITH SUPPLEMENTAL INFORMATION AND INFORMATION PERTAINING TO FEDERAL AWARDS

JUNE 30, 2020

LINCOLN COUNTY, NEVADA
REPORT ON FINANCIAL STATEMENTS
YEAR ENDED JUNE 30, 2020
TABLE OF CONTENTS

	PAGE
INTRODUCTORY SECTION	
Organization	1
FINANCIAL SECTION	
Independent Auditor's Report	2-4
Management's Discussion and Analysis	5-13
BASIC FINANCIAL STATEMENTS:	
GOVERNMENT-WIDE FINANCIAL STATEMENTS:	
Statement of Net Position	14
Statement of Activities	15
FUND FINANCIAL STATEMENTS:	
GOVERNMENTAL FUNDS:	
Balance Sheet	16-17
Reconciliation of the Governmental Funds Balance Sheet to the Statement of Net Position	18
Statement of Revenues, Expenditures, and Changes in Fund Balances	19-20
Reconciliation of the Statement of Revenues, Expenditures, and Changes in Fund Balance of Governmental Funds to the Statement of Activities	21
PROPRIETARY FUNDS:	
Statement of Net Position	22-23
Statement of Revenues, Expenses, and Changes in Net Position	24-25
Statement of Cash Flows	26-27
FIDUCIARY FUND:	
Statement of Fiduciary Net Position	28
Statement of Changes in Fiduciary Net Position	29
Notes to the Basic Financial Statements	30-62
REQUIRED SUPPLEMENTARY INFORMATION:	
Schedule of Revenues, Expenditures, and Changes in Fund Balance - Budget (GAAP Basis) and Actual	
General Fund (Budgetary Basis)	63-68
Road Special Revenue Fund	69
Lincoln County Water District Water Resources Special Revenue Fund	70
Lincoln County Land Act Special Revenue Fund	71
County Grant Special Revenue Fund	72
Reconciliation of the General Fund (Budgetary Basis) to the General Fund (GAAP Basis)	73
Schedule of Changes in the County's Total OPEB Liability and Related Ratios	74
Schedule of the County's Contributions to the Public Employees' Retirement System of the State of Nevada	75
Schedule of the County's Porportionate Share of the Net Pension Liability	76
Notes to Required Supplementary Information	77
SUPPLEMENTARY INFORMATION:	
COMBINING AND INDIVIDUAL FUND STATEMENTS AND SCHEDULES:	
NONMAJOR GOVERNMENTAL FUNDS:	
Combining Balance Sheet	78
Combining Statement of Revenues, Expenditures, and Changes in Fund Balance	79
GOVERNMENTAL FUNDS:	
Reconciliation of the General Fund (Budgetary Basis) to the General Fund (GAAP Basis) - Balance Sheet	80

SUPPLEMENTARY INFORMATION (Continued):
COMBINING AND INDIVIDUAL FUND STATEMENTS AND SCHEDULES (Continued):
MAJOR GOVERNMENTAL FUNDS:
General Fund:
Comparative Balance Sheets 81
Schedule of Revenues, Expenditures, and Changes in Fund Balance - Budget (Budgetary Basis) and Actual 82
Schedule of Revenues Compared to Budget (Budgetary Basis) 83
Schedule of Expenditures Compared to Budget (Budgetary Basis) 84-87
Road Special Revenue Fund:
Comparative Balance Sheets 88
Schedule of Revenues, Expenditures, and Changes in Fund Balance - Budget (GAAP Basis) and Actual 89
Lincoln County Water District Water Resources Special Revenue Fund:
Comparative Balance Sheets 90
Schedule of Revenues, Expenditures, and Changes in Fund Balance - Budget (GAAP Basis) and Actual 91
Lincoln County Land Act Special Use Revenue Fund:
Comparative Balance Sheets 92
Schedule of Revenues, Expenditures, and Changes in Fund Balance - Budget (GAAP Basis) and Actual 93
County Grant Special Revenue Fund:
Comparative Balance Sheets 94
Schedule of Revenues, Expenditures, and Changes in Fund Balance - Budget (GAAP Basis) and Actual 95

MAJOR ENTERPRISE FUND:
Detention Center Enterprise Fund:
Comparative Statement of Net Position 96
Schedule of Revenues, Expenses and Changes in Net Position 97
Comparative Statement of Cash Flows 98
Solid Waste:
Statement of Net Position 99
Schedule of Revenues, Expenses and Changes in Net Position 100
Statement of Cash Flows 101

NONMAJOR SPECIAL REVENUE FUNDS:
Combining Balance Sheet 102-111
Combining Schedule of Revenues, Expenditures, and Changes in Fund Balances 112-121
Pioche Town:
Comparative Balance Sheets 122
Schedule of Revenues, Expenditures, and Changes in Fund Balance - Budget (GAAP Basis) and Actual 123-124
Alamo Town:
Comparative Balance Sheets 125
Schedule of Revenues, Expenditures, and Changes in Fund Balance - Budget (GAAP Basis) and Actual 126-127
Panaca Town:
Comparative Balance Sheets 128
Schedule of Revenues, Expenditures, and Changes in Fund Balance - Budget (GAAP Basis) and Actual 129-130
Federal In Lieu Tax Special Revenue Fund:
Comparative Balance Sheets 131
Schedule of Revenues, Expenditures, and Changes in Fund Balance - Budget (GAAP Basis) and Actual 132-133
Resource Development Authority:
Comparative Balance Sheets 134
Schedule of Revenues, Expenditures, and Changes in Fund Balance - Budget (GAAP Basis) and Actual 135
County Library:
Comparative Balance Sheets 136
Schedule of Revenues, Expenditures, and Changes in Fund Balance - Budget (GAAP Basis) and Actual 137
Museum:
Comparative Balance Sheets 138
Schedule of Revenues, Expenditures, and Changes in Fund Balance - Budget (GAAP Basis) and Actual 139

SUPPLEMENTARY INFORMATION (Continued):
COMBINING AND INDIVIDUAL FUND STATEMENTS AND SCHEDULES (Continued):
NONMAJOR SPECIAL REVENUE FUNDS:

Senior Nutrition:
Comparative Balance Sheets 140
Schedule of Revenues, Expenditures, and Changes in Fund Balance - Budget (GAAP Basis) and Actual 141

Transportation:
Comparative Balance Sheets 142
Schedule of Revenues, Expenditures, and Changes in Fund Balance - Budget (GAAP Basis) and Actual 143

Agricultural Extension:
Comparative Balance Sheets 144
Schedule of Revenues, Expenditures, and Changes in Fund Balance - Budget (GAAP Basis) and Actual 145

Indigent:
Comparative Balance Sheets 146
Schedule of Revenues, Expenditures, and Changes in Fund Balance - Budget (GAAP Basis) and Actual 147

Medical Indigent:
Comparative Balance Sheets 148
Schedule of Revenues, Expenditures, and Changes in Fund Balance - Budget (GAAP Basis) and Actual 149

China Springs:
Comparative Balance Sheets 150
Schedule of Revenues, Expenditures, and Changes in Fund Balance - Budget (GAAP Basis) and Actual 151

Ambulance:
Comparative Balance Sheets 152
Schedule of Revenues, Expenditures, and Changes in Fund Balance - Budget (GAAP Basis) and Actual 153

Regional Transportation Commission:
Comparative Balance Sheets 154
Schedule of Revenues, Expenditures, and Changes in Fund Balance - Budget (GAAP Basis) and Actual 155

Room Tax:
Comparative Balance Sheets 156
Schedule of Revenues, Expenditures, and Changes in Fund Balance - Budget (GAAP Basis) and Actual 157

Legal Aid Services:
Comparative Balance Sheets 158
Schedule of Revenues, Expenditures, and Changes in Fund Balance - Budget (GAAP Basis) and Actual 159

Forensic Services:
Comparative Balance Sheets 160
Schedule of Revenues, Expenditures, and Changes in Fund Balance - Budget (GAAP Basis) and Actual 161

Administrative Assessment:
Comparative Balance Sheets 162
Schedule of Revenues, Expenditures, and Changes in Fund Balance - Budget (GAAP Basis) and Actual 163

Forfeiture:
Comparative Balance Sheets 164
Schedule of Revenues, Expenditures, and Changes in Fund Balance - Budget (GAAP Basis) and Actual 165

Recorder Technology:
Comparative Balance Sheets 166
Schedule of Revenues, Expenditures, and Changes in Fund Balance - Budget (GAAP Basis) and Actual 167

L.C. Housing Authority:
Comparative Balance Sheets 168
Schedule of Revenues, Expenditures, and Changes in Fund Balance - Budget (GAAP Basis) and Actual 169

Alamo Clinic:
Comparative Balance Sheets 170
Schedule of Revenues, Expenditures, and Changes in Fund Balance - Budget (GAAP Basis) and Actual 171

Fair Board:
Comparative Balance Sheets 172
Schedule of Revenues, Expenditures, and Changes in Fund Balance - Budget (GAAP Basis) and Actual 173

SUPPLEMENTARY INFORMATION (Continued):
COMBINING AND INDIVIDUAL FUND STATEMENTS AND SCHEDULES (Continued):
NONMAJOR SPECIAL REVENUE FUNDS (Continued):

Multi-species Habitat Conservation :
Comparative Balance Sheets 174
Schedule of Revenues, Expenditures, and Changes in Fund Balance - Budget (GAAP Basis) and Actual 175

Multi-species Habitat Conservation Section 7:
Comparative Balance Sheets 176
Schedule of Revenues, Expenditures, and Changes in Fund Balance - Budget (GAAP Basis) and Actual 177

Youth Activities Counsel:
Comparative Balance Sheet 178
Schedule of Revenues, Expenditures, and Changes in Fund Balance - Budget (GAAP Basis) and Actual 179

Genetic Marker Testing :
Comparative Balance Sheet 180
Schedule of Revenues, Expenditures, and Changes in Fund Balance - Budget (GAAP Basis) and Actual 181

Public Improvement:
Comparative Balance Sheet 182
Schedule of Revenues, Expenditures, and Changes in Fund Balance - Budget (GAAP Basis) and Actual 183

Airport:
Comparative Balance Sheet 184
Schedule of Revenues, Expenditures, and Changes in Fund Balance - Budget (GAAP Basis) and Actual 185

Panaca Town Building:
Comparative Balance Sheet 186
Schedule of Revenues, Expenditures, and Changes in Fund Balance - Budget (GAAP Basis) and Actual 187

Court Facility Fees:
Comparative Balance Sheet 188
Schedule of Revenues, Expenditures, and Changes in Fund Balance - Budget (GAAP Basis) and Actual 189

Tri-County Weed Control:
Comparative Balance Sheet 190
Schedule of Revenues, Expenditures, and Changes in Fund Balance - Budget (GAAP Basis) and Actual 191

Lincoln County Land Act - General:
Comparative Balance Sheet 192
Schedule of Revenues, Expenditures, and Changes in Fund Balance - Budget (GAAP Basis) and Actual 193

Lincoln County Land Act - Planning and Development:
Comparative Balance Sheet 194
Schedule of Revenues, Expenditures, and Changes in Fund Balance - Budget (GAAP Basis) and Actual 195

Lincoln County Land Act - Education:
Comparative Balance Sheet 196
Schedule of Revenues, Expenditures, and Changes in Fund Balance - Budget (GAAP Basis) and Actual 197

Lincoln County Land Act - Grant Match:
Comparative Balance Sheet 198
Schedule of Revenues, Expenditures, and Changes in Fund Balance - Budget (GAAP Basis) and Actual 199

Lincoln County Water - General:
Comparative Balance Sheet 200
Schedule of Revenues, Expenditures, and Changes in Fund Balance - Budget (GAAP Basis) and Actual 201

Lincoln County Water - Special Projects:
Comparative Balance Sheet 202
Schedule of Revenues, Expenditures, and Changes in Fund Balance - Budget (GAAP Basis) and Actual 203

Lincoln County Water - Planning and Development:
Comparative Balance Sheet 204
Schedule of Revenues, Expenditures, and Changes in Fund Balance - Budget (GAAP Basis) and Actual 205

Lincoln County Water - Special Use:
Comparative Balance Sheet 206
Schedule of Revenues, Expenditures, and Changes in Fund Balance - Budget (GAAP Basis) and Actual 207

SUPPLEMENTARY INFORMATION (Continued):
COMBINING AND INDIVIDUAL FUND STATEMENTS AND SCHEDULES (Continued):
NONMAJOR SPECIAL REVENUE FUNDS (Continued):
Lincoln County Water - Grant Match:
Comparative Balance Sheet 208
Schedule of Revenues, Expenditures, and Changes in Fund Balance - Budget (GAAP Basis) and Actual 209
Lincoln County Water District - General :
Comparative Balance Sheets 210
Schedule of Revenues, Expenditures, and Changes in Fund Balance - Budget (GAAP Basis) and Actual 211
Lincoln County Water District - Planning & Development :
Comparative Balance Sheets 212
Schedule of Revenues, Expenditures, and Changes in Fund Balance - Budget (GAAP Basis) and Actual 213
Lincoln County Water District - Special Projects :
Comparative Balance Sheets 214
Schedule of Revenues, Expenditures, and Changes in Fund Balance - Budget (GAAP Basis) and Actual 215
Assessor Technology:
Comparative Balance Sheets 216
Schedule of Revenues, Expenditures, and Changes in Fund Balance - Budget (GAAP Basis) and Actual 217
District Court Technology:
Comparative Balance Sheets 218
Schedule of Revenues, Expenditures, and Changes in Fund Balance - Budget (GAAP Basis) and Actual 219
District Court Specialty Court:
Comparative Balance Sheets 220
Schedule of Revenues, Expenditures, and Changes in Fund Balance - Budget (GAAP Basis) and Actual 221
Court Security Fee:
Comparative Balance Sheets 222
Schedule of Revenues, Expenditures, and Changes in Fund Balance - Budget (GAAP Basis) and Actual 223
District Court Enrichment:
Comparative Balance Sheets 224
Schedule of Revenues, Expenditures, and Changes in Fund Balance - Budget (GAAP Basis) and Actual 225
Demerit Point Reduction:
Balance Sheet 226
Schedule of Revenues, Expenditures, and Changes in Fund Balance - Budget (GAAP Basis) and Actual 227
Property Management:
Comparative Balance Sheets 228
Schedule of Revenues, Expenditures, and Changes in Fund Balance - Budget (GAAP Basis) and Actual 229

Internally Reported (Budgetary Basis) Funds Reported as Part of the General Fund for External Reporting Purposes (Continued):
Combining Balance Sheet 230-231
Combining Schedule of Revenues, Expenditures and Changes in Fund Balance 232-233
Stabilization:
Comparative Balance Sheets 234
Schedule of Revenues, Expenditures, and Changes in Fund Balance - Budget (GAAP Basis) and Actual 235
Planning:
Comparative Balance Sheets 236
Schedule of Revenues, Expenditures, and Changes in Fund Balance - Budget (GAAP Basis) and Actual 237
Rachel Jones Memorial Cemetery:
Comparative Balance Sheets 238
Schedule of Revenues, Expenditures, and Changes in Fund Balance - Budget (GAAP Basis) and Actual 239
Flood Control:
Comparative Balance Sheets 240
Schedule of Revenues, Expenditures, and Changes in Fund Balance - Budget (GAAP Basis) and Actual 241
Special Projects:
Comparative Balance Sheets 242
Schedule of Revenues, Expenditures, and Changes in Fund Balance - Budget (GAAP Basis) and Actual 243

SUPPLEMENTARY INFORMATION (Continued):
COMBINING AND INDIVIDUAL FUND STATEMENTS AND SCHEDULES (Continued):
Internally Reported (Budgetary Basis) Funds Reported as Part of the General Fund for External Reporting Purposes (Continued):
Lincoln County Land Act - Emergency Disaster:
Comparative Balance Sheet 244
Schedule of Revenues, Expenditures, and Changes in Fund Balance - Budget (GAAP Basis) and Actual 245
Lincoln County Water - Emergency Disaster:
Comparative Balance Sheet 246
Schedule of Revenues, Expenditures, and Changes in Fund Balance - Budget (GAAP Basis) and Actual 247

NONMAJOR CAPITAL PROJECTS FUNDS:
Combining Balance Sheet 248-250
Combining Statement of Revenues, Expenditures, and Changes in Fund Balances 251-253
Capital Improvements:
Comparative Balance Sheets 254
Schedule of Revenues, Expenditures, and Changes in Fund Balance - Budget (GAAP Basis) and Actual 255
Pioche Town Grant:
Comparative Balance Sheets 256
Schedule of Revenues, Expenditures, and Changes in Fund Balance - Budget (GAAP Basis) and Actual 257
Pioche Town:
Comparative Balance Sheets 258
Schedule of Revenues, Expenditures, and Changes in Fund Balance - Budget (GAAP Basis) and Actual 259
Alamo Town:
Comparative Balance Sheets 260
Schedule of Revenues, Expenditures, and Changes in Fund Balance - Budget (GAAP Basis) and Actual 261
Panaca Town:
Comparative Balance Sheets 262
Schedule of Revenues, Expenditures, and Changes in Fund Balance - Budget (GAAP Basis) and Actual 263
Ambulance:
Comparative Balance Sheets 264
Schedule of Revenues, Expenditures, and Changes in Fund Balance - Budget (GAAP Basis) and Actual 265
Fair Board:
Comparative Balance Sheets 266
Schedule of Revenues, Expenditures, and Changes in Fund Balance - Budget (GAAP Basis) and Actual 267
Vehicle Capital Projects:
Comparative Balance Sheets 268
Schedule of Revenues, Expenditures, and Changes in Fund Balance - Budget (GAAP Basis) and Actual 269
Road Equipment:
Comparative Balance Sheets 270
Schedule of Revenues, Expenditures, and Changes in Fund Balance - Budget (GAAP Basis) and Actual 271
Airport:
Comparative Balance Sheets 272
Schedule of Revenues, Expenditures, and Changes in Fund Balance - Budget (GAAP Basis) and Actual 273
Lincoln County Land Act:
Comparative Balance Sheets 274
Schedule of Revenues, Expenditures, and Changes in Fund Balance - Budget (GAAP Basis) and Actual 275
Lincoln County Water:
Comparative Balance Sheets 276
Schedule of Revenues, Expenditures, and Changes in Fund Balance - Budget (GAAP Basis) and Actual 277
Lincoln County Water District:
Comparative Balance Sheets 278
Schedule of Revenues, Expenditures, and Changes in Fund Balance - Budget (GAAP Basis) and Actual 279

SUPPLEMENTARY INFORMATION (Continued):
COMBINING AND INDIVIDUAL FUND STATEMENTS AND SCHEDULES (Continued):

Nonmajor Enterprise Funds:
Combining Statement of Net Position 280-281
Combining Schedule of Revenues, Expenses and Changes in Net Position 282-283
Combining Statement of Cash Flows 284-285
Pioche Public Utility Water:
Comparative Statement of Net Position 286
Schedule of Revenues, Expenses and Changes in Net Position 287
Comparative Statement of Cash Flows 288
Pioche Public Utility Sewer:
Comparative Statement of Net Position 289
Schedule of Revenues, Expenses and Changes in Net Position 290
Comparative Statement of Cash Flows 291
Pioche Public Utility Electric:
Comparative Statement of Net Position 292
Schedule of Revenues, Expenses and Changes in Net Position 293
Comparative Statement of Cash Flows 294
Building Department:
Comparative Statement of Net Position 295
Schedule of Revenues, Expenses and Changes in Net Position 296
Comparative Statement of Cash Flows 297

AGENCY FUNDS:
Combining Statement of Net Position 298-301
Combining Statement of Changes in Assets and Liabilities 302-306

ACCOMPANYING INFORMATION - FEDERAL AWARDS
Schedule of Expenditures of Federal Awards 307-309
Notes to Schedule of Expenditures of Federal Awards 310-311
Summary Schedule of Prior Year Audit Findings and Questioned Costs 312
Independent Auditor's Report on Internal Control Over Financial Reporting and on Compliance and Other Matters Based on an Audit of Financial Statements Performed in Accordance with *Government Auditing Standards* 313-314
Independent Auditor's Report on Compliance for Each Major Program; Report on Internal Control Over Compliance; and Report on Schedule of Expenditures of Federal Awards Required by the Uniform Guidance 315-316
Schedule of Findings and Questioned Costs 317-318

INDEPENDENT AUDITOR'S COMMENTS 319-320

LINCOLN COUNTY, NEVADA
ORGANIZATION

COUNTY OFFICERS at June 30, 2020:

Commissioners	Varlin Higbee, Chairman
	Jared Brackenbury, Vice Chairman
	Kevin Phillips, Member
	Bevan Lister, Member
	Keith Pearson, Member
Clerk	Lisa Lloyd
Treasurer	Shawn Frehner
Auditor/Recorder	Amy Elmer
Assessor	Mark Holt
Sheriff	Kerry Lee
District Attorney	Dylan Frehner
Justice of the Peace	Mike Cowley
Justice of the Peace	Nola Holton

DANIEL C. McARTHUR, LTD.
Certified Public Accountant

Quail Park III • 501 So. Rancho Dr., Ste. E-30 • Las Vegas, NV 89106 • (702) 385-1899 • FAX (702) 385-9619

INDEPENDENT AUDITOR'S REPORT

Honorable Board of County Commissioners
Lincoln County, Nevada
Pioche, Nevada

Report on the Financial Statements

We have audited the accompanying financial statements of the governmental activities, the business-type activities, each major fund, and the aggregate remaining fund information of Lincoln County, Nevada (the County), as of and for the year ended June 30, 2020, and the related notes to the financial statements, which collectively comprise the County's basic financial statements as listed in the table of contents.

Management's Responsibility for the Financial Statements

Management is responsible for the preparation and fair presentation of these financial statements in accordance with accounting principles generally accepted in the United States of America; this includes the design, implementation, and maintenance of internal control relevant to the preparation and fair presentation of financial statements that are free from material misstatement, whether due to fraud or error.

Auditor's Responsibility

Our responsibility is to express opinions on these financial statements based on our audit. We conducted our audit in accordance with auditing standards generally accepted in the United States of America and the standards applicable to financial audits contained in *Government Auditing Standards*, issued by the Comptroller General of the United States. Those standards require that we plan and perform the audit to obtain reasonable assurance about whether the financial statements are free from material misstatement.

An audit involves performing procedures to obtain audit evidence about the amounts and disclosures in the financial statements. The procedures selected depend on the auditor's judgment, including the assessment of the risks of material misstatement of the financial statements, whether due to fraud or error. In making those risk assessments, the auditor considers internal control relevant to the entity's preparation and fair presentation of the financial statements in order to design audit procedures that are appropriate in the circumstances, but not for the purpose of expressing an opinion on the effectiveness of the entity's internal control. Accordingly, we express no such opinion. An audit also includes evaluating the appropriateness of accounting policies used and the reasonableness of significant accounting estimates made by management, as well as evaluating the overall presentation of the financial statements.

We believe that the audit evidence we have obtained is sufficient and appropriate to provide a basis for our audit opinions.

Opinions

In our opinion, the financial statements referred to above present fairly, in all material respects, the respective financial position of the governmental activities, the business-type activities, each major fund, and the aggregate remaining fund information of Lincoln County, Nevada, as of June 30, 2020, and the respective changes in financial position and, where applicable, cash flows thereof, for the year then ended in accordance with accounting principles generally accepted in the United States of America.

Other Matters

Required Supplementary Information

Accounting principles generally accepted in the United States of America require that the Management's Discussion and Analysis on pages 5-13, budgetary comparisons information on pages 63-72, Reconciliation of the General Fund (Budgetary Basis) to the General Fund (GAAP Basis) on page 73, Schedule of Changes in the County's Total OPEB Liability and Related Ratios on page 74, Schedule of the County's Contributions to the Public Employees' Retirement System of the State of Nevada on Page 75, and Schedule of the County's Proportionate Share of the Net Pension Liability Public Employees' Retirement System of the State of Nevada on page 76 be presented to supplement the basic financial statements. Such information, although not a part of the basic financial statements, is required by the Governmental Accounting Standards Board, who considers it to be an essential part of financial reporting for placing the basic financial statements in an appropriate operational, economic, or historical context. We have applied certain limited procedures to the required supplementary information in accordance with auditing standards generally accepted in the United States of America, which consisted of inquiries of management about the methods of preparing the information and comparing the information for consistency with management's responses to our inquiries, the basic financial statements, and other knowledge we obtained during our audit of the basic financial statements. We do not express an opinion or provide any assurance on the information because the limited procedures do not provide us with sufficient evidence to express an opinion or provide any assurance.

Other Information

Our audit for the year ended June 30, 2020 was conducted for the purpose of forming opinions on the financial statements that collectively comprise the County's basic financial statements. The combining and individual fund financial statements and schedules for the year ended June 30, 2020 are presented for purposes of additional analysis and are not a required part of the basic financial statements. Such information is the responsibility of management and was derived from and relates directly to the underlying accounting and other records used to prepare the basic financial statements. The combining and individual fund financial statements and schedules have been subjected to the auditing procedures applied in the audits of the basic financial statements for the year ended June 30, 2020, and certain additional procedures, including comparing and reconciling such information directly to the underlying accounting and other records used to prepare the basic financial statements or to the basic financial statements themselves, and other additional procedures in accordance with auditing standards generally accepted in the United States of America. In our opinion, the combining and individual fund financial statements and schedules are fairly stated in all material respects in relation to the basic financial statements as a whole for the year ended June 30, 2020.

We also previously audited, in accordance with auditing standards generally accepted in the United States of America, the basic financial statements of the County as of and for the year ended June 30, 2019 (not presented herein), and have issued our report thereon dated November 27, 2019, which contained unmodified opinions on the respective financial statements of the governmental activities, the business activities, each major fund, and the aggregate remaining fund information. The combining and individual fund financial statements and schedules for the year ended June 30, 2019, are presented for purposes of additional analysis and are not a required part of the basic financial statements. Such information is the responsibility of management and was derived from and relates directly to the underlying accounting and other records used to prepare the 2019 financial statements. The combining and individual fund financial statements and schedules have been subjected to the auditing procedures applied in the audit of the 2019 basic financial statements and certain additional procedures, including comparing and reconciling such information directly to the underlying accounting and other records used to prepare those financial statements or to those financial statements themselves, and other additional procedures in accordance with auditing standards generally accepted in the United States of America. In our opinion, the combining and individual fund financial statements and schedules are fairly stated in all material respects in relation to the basic financial statements as a whole for the year ended June 30, 2019.

Other Reporting Required by *Government Auditing Standards*

In accordance with *Government Auditing Standards*, we have also issued our report dated November 25, 2020 on our consideration of the County's internal control over financial reporting and on our tests of its compliance with certain provisions of laws, regulations, contracts, and grant agreements and other matters. The purpose of that report is solely to describe the scope of our testing of internal control over financial reporting and compliance and the results of that testing, and not to provide an opinion on the effectiveness of the County's in internal control over financial reporting or on compliance. That report is an integral part of an audit performed in accordance with *Government Auditing Standards* in considering the County's internal control over financial reporting and compliance.



Las Vegas, Nevada
November 25, 2020

As management of Lincoln County, Nevada, we offer readers of Lincoln County, Nevada's financial statements this narrative overview and analysis of the financial activities of Lincoln County, Nevada, for the fiscal year end June 30, 2020. The Management's Discussion and Analysis ("MD&A") introduces the financial reports for Lincoln County, Nevada. The MD&A is designed to give the reader an easy-to-understand overview of the County's financial position and results of operations for the year. The MD&A is separated into Financial Highlights, an Overview of the Financial Statements, and a Government-Wide Financial Analysis.

Financial Highlights

The assets of the County exceeded its liabilities at the close of the 2020 fiscal year by $36,124,939 (net position). Total net position represents approximately $25,307,570 in capital assets, net of related debt, and $7,732,560 in assets restricted for debt services, capital projects, public works, and for other purposes. The remaining $2,741,182 represents unrestricted net position, which may be used to meet the County's ongoing obligations to its citizens and creditors.

The government-wide net position of the County decreased during the fiscal year 2020 by $134,885, or 0.38%.

At the end of fiscal year 2020, the County's governmental funds reported combined fund balances of $21,526,362; an increase of $1,351,253, or 6.70%, when compared to the previous year.

The County's primary revenue sources for governmental activities were ad valorem (property) taxes of $3,183,017, fuel taxes of $1,731,672, charges for services of $1,290,248, consolidated taxes of $1,546,075, operating grants and contributions of $1,074,896, and federal in lieu taxes of $974,644. These revenue sources comprised 25.14%, 13.68%, 10.19%, 12.21%, 8.49%, and 7.70% respectively, or 77.41%, of total governmental activities revenues. Business-type activities revenue from charges for services was $3,064,200.

The County's total government-wide expenses were $15,201,341. The greatest expenses were in the General Government $3,727,601, Public Works $2,349,771, and Public Safety $2,248,318 functions. Business-type activities contributed $3,384,680 to total expenses.

Overview of the Financial Statements

This discussion and analysis is intended to serve as an introduction to the County's basic financial statements which consists of government-wide financial statements, fund financial statements, and accompanying notes. This report also contains required supplementary information in addition to the basic financial statements.

Government-Wide Financial Statements: The government-wide financial statements are designed to provide readers with a broad overview of the County's finances in a manner similar to a private-sector business.

The Statement of Net Position presents information on all of the County's assets and liabilities with the difference reported as net position. Increases or decreases in net position may serve as a useful indicator of whether the financial position of the County is improving or deteriorating.

Overview of the Financial Statements (Continued)

The Statement of Activities presents information showing how the County's net position changed during the most recent fiscal year. All changes in net position are reported as soon as the underlying event giving rise to the change occurs, regardless of the timing of related cash flows. Thus, revenues and expenses are reported in this statement for some items that will only result in cash flows in future fiscal periods (e.g., uncollected taxes and earned but unused vacation and sick leave).

The government-wide financial statements report two types of activities: governmental activities and business-type activities. The government-wide financial statements distinguish functions of the County that are principally supported by taxes and intergovernmental revenues (governmental activities) from other functions that are intended to recover all or a significant portion of their costs through user fees and charges (business-type activities). The governmental activities of the County include general government, public safety, public works, judicial, health, sanitation, welfare, community support, culture and recreation, and intergovernmental. The business-type activities include operations of its detention center, utilities, solid waste, and building department operations.

Fund Financial Statements: A fund is a grouping of related accounts used to maintain control over resources that have been segregated for specific activities or objectives. The County, like other state and local governments, uses fund accounting to ensure and demonstrate compliance with finance-related legal requirements. All of the funds of the County can be divided into three categories: governmental funds, proprietary funds, and fiduciary funds.

Governmental Funds: Governmental funds are used to account for essentially the same functions reported as governmental activities in the government-wide financial statements. However, unlike the government-wide financial statements, governmental fund financial statements focus on near-term inflows and outflows of spendable resources, as well as on balances of spendable resources available at the end of the fiscal year. Such information may be useful in evaluating the County's near-term financial requirements.

Because the focus of governmental funds is narrower than that of the government-wide financial statements, it is useful to compare the information presented for governmental funds with similar information presented for governmental activities in the government-wide financial statements. By doing so, readers may better understand the long-term impact of the County's near-term financing decisions. Both the governmental fund balance sheet and the governmental fund statement of revenues, expenditures, and changes in fund balances provide a reconciliation to facilitate this comparison between governmental funds and governmental activities.

The County maintains individual governmental funds. Information is presented separately in the governmental balance sheet and the governmental fund statement of revenues, expenditures, and changes in fund balances for the General Fund, Road Fund, Lincoln County Water District Water Resources Fund, Lincoln County Land Act Special Use Fund, and County Grant Fund, each of which is considered to be a major fund. Data from the other governmental funds are combined into a single, aggregated presentation. Individual fund data for each of these nonmajor governmental funds is provided in the combining and individual fund statements and schedules.

The County adopts an annual appropriated budget for each of its governmental funds. A budgetary comparison statement is provided for each of the County's governmental funds to demonstrate compliance with the budget. The budgetary comparison statements for the major governmental funds are presented as required supplementary information; the budgetary comparison statements for all other governmental funds are included in the fund financial statements accompanying information.

Overview of the Financial Statements (Continued)

Proprietary Funds: The County maintains one type of proprietary fund, the Enterprise Fund. The Enterprise Fund is used to report the same functions presented as business-type activities in the government-wide financial statements. The County uses the Enterprise Funds to account for its utility activities, building department activities, solid waste operation, and operation of the detention center.

Proprietary funds provide the same type of information as the government-wide financial statements, only in more detail. The proprietary fund financial statements provide separate information for the utility funds, building department, solid waste, and detention center. The Detention Center and Solid Waste are considered to be major funds of the County.

Fiduciary Funds: Fiduciary funds are used to account for the resources held for the benefit of parties outside of the government; Fiduciary funds are not reported in the government wide financial statements because the resources of those funds are not available to support the County's own programs. The accounting used for fiduciary funds is much like that used for proprietary funds.

The County has two types of fiduciary funds. The Agency Fund reports resources held by the County in a custodial capacity for individuals, private organizations, and other governments. The investment trust fund is an external investment pool operated by the Lincoln County Treasurer.

Notes to Financial Statements: The notes to the financial statements provide additional information that is essential to acquire a full understanding of the data provided in the government-wide and fund financial statements.

Other Information: In addition to the basic financial statements and accompanying notes, this report also presents certain required supplementary information concerning the County's progress in funding its obligation to provide other post-employment benefits to its employees; and schedules of budgetary comparisons for both the original and final budgets of the General Fund and the various other major County funds.

The combining statements and individual fund schedules referred to earlier in connection with the nonmajor governmental funds are presented immediately following the required supplementary information.

Government-Wide Financial Analysis

Net position of the County as of June 30, 2020, is summarized and analyzed below:

Net Position

	Governmental Activities		Business-type Activities		Total Primary Government	
	2020	**2019**	**2020**	**2019**	**2020**	**2019**
Assets:						
Current and other assets	$22,900,634	$21,203,764	$1,849,656	$1,970,803	$24,750,290	$23,174,567
Net capital assets	22,843,095	23,721,612	2,763,346	2,648,451	25,606,441	26,370,063
Total assets	45,743,729	44,925,376	4,613,002	4,619,254	50,356,731	49,544,630
Deferred outflows of resources:						
Deferred pension charge	1,144,436	1,238,859	455,878	521,732	1,600,314	1,760,591
Deferred OPEB	23,141	35,909	5,728	5,286	28,869	41,195
Total deferred outflows	1,167,577	1,274,768	461,606	527,018	1,629,183	1,801,786
Liabilities:						
Current liabilities	1,538,303	1,318,329	479,781	421,150	2,018,084	1,739,479
Long-term liabilities	7,988,396	8,143,723	4,483,951	4,371,952	12,472,347	12,515,675
Total liabilities	9,526,699	9,462,052	4,963,732	4,793,102	14,490,431	14,255,154
Deferred inflows of resources:						
Deferred pension charge	1,259,668	828,844	454,503	346,221	1,714,171	1,175,065
Net position:						
Invested in capital assets, net of related debt	22,721,713	23,607,589	2,585,857	2,460,332	25,307,570	26,067,921
Restricted	7,721,070	6,383,630	11,490	32,238	7,732,560	6,415,868
Unrestricted	5,682,156	5,918,029	(2,940,974)	(2,485,621)	2,741,182	3,432,408
Total net position	$36,124,939	$35,909,248	$ (343,627)	$ 6,949	$35,781,312	$35,916,197

As noted earlier, net assets may serve over time as a useful indicator of the County's financial position. Assets exceeded liabilities by $35,781,312 as of June 30, 2020, and by $35,916,197 as of June 30, 2019, resulting in a net decrease of $134,885, or 0.38%.

A portion of the County's net assets, 70.73%, reflects its investment in capital assets (e.g., land, buildings, machinery and equipment, etc.), net of any related debt outstanding used to acquire those assets. The County uses these capital assets to provide services to citizens; consequently, these assets are not available for future spending. Although the County's investment in its capital assets is reported net of related debt, it should be noted that the resources needed to repay this debt must be provided from other sources, since the capital assets themselves cannot be used to liquidate the debt.

The County's restricted net assets of 21.61% represents resources that are subject to external restrictions on how they may be used.

The remaining portion of the County's net assets, 7.66%, is unrestricted and may be used to meet the County's ongoing obligations to citizens and creditors.

At June 30, 2020, the County had positive balances in all three categories of net assets.

Changes in net position of the County are summarized as follows:

	Governmental Activities		Business-type Activities		Total	
	2020	2019	2020	2019	2020	2019
Revenues:						
Program revenues:						
Charges for services	$ 1,290,248	$ 1,817,359	$ 3,064,200	$ 3,596,448	$ 4,354,448	$ 5,413,807
Operating grants and contributions	1,074,896	1,012,094	-	-	1,074,896	1,012,094
Capital grants and contributions	340,169	519,824	-	-	340,169	519,824
General revenues:						
Ad valorem taxes	3,183,017	3,138,259	-	-	3,183,017	3,138,259
Consolidated taxes	1,546,075	1,508,040	-	-	1,546,075	1,508,040
Fuel taxes	1,731,672	1,843,255	-	-	1,731,672	1,843,255
Federal in lieu taxes	974,644	932,088	-	-	974,644	932,088
Gaming taxes	127,467	132,437	-	-	127,467	132,437
Room taxes	70,479	69,119	-	-	70,479	69,119
Marijuana fees	88,270	88,235	-	-	88,270	88,235
Tax penalties and costs	50,574	59,542	-	-	50,574	59,542
Excess proceeds	24,697	-	-	-	24,697	-
Private car line	-	2	-	-	-	2
Fish and wildlife	3,298	3,794	-	-	3,298	3,794
Rent	135,208	128,997	-	-	135,208	128,997
National forest	14,947	15,140	-	-	14,947	15,140
Water sales	186,503	500	-	-	186,503	500
Coyote Springs GID dissolution	916,307	-	-	-	916,307	-
Investment income (loss)	833,993	593,951	16,092	7,860	850,085	601,811
Other	66,868	47,544	67,687	161,041	134,555	208,585
Total revenues	12,659,332	11,910,180	3,147,979	3,765,349	15,807,311	15,675,529
Expenses:						
General government	3,727,601	3,496,455	-	-	3,727,601	3,496,455
Public safety	2,248,318	1,899,672	-	-	2,248,318	1,899,672
Judicial	1,214,032	1,201,659	-	-	1,214,032	1,201,659
Public works	2,349,771	2,031,104	-	-	2,349,771	2,031,104
Health	371,633	318,285	-	-	371,633	318,285
Welfare	652,626	631,410	-	-	652,626	631,410
Culture and recreation	833,354	806,026	-	-	833,354	806,026
Community support	270,822	263,221	-	-	270,822	263,221
Intergovernmental	127,313	115,979	-	-	127,313	115,979
Other	15,911	6,971	3,384,680	3,521,652	3,400,591	3,528,623
Loss on disposal of assets	5,280	13,556	-	-	5,280	13,556
Total expenses	11,816,661	10,784,338	3,384,680	3,521,652	15,201,341	14,305,990
Change in net position before transfers and special items	842,671	1,125,842	(236,701)	243,697	605,970	1,369,539
Special items	(516,980)	-	(223,875)	-	(740,855)	-
Transfers	(110,000)	(137,500)	110,000	137,500	-	-
Change in net position	215,691	988,342	(350,576)	381,197	(134,885)	1,369,539
Net position - beginning	35,909,248	34,920,906	6,949	(374,248)	35,916,197	34,546,658
Net position - ending	$ 36,124,939	$ 35,909,248	$ (343,627)	$ 6,949	$ 35,781,312	$ 35,916,197

Program revenues include charges for services, fines and forfeitures, certain licenses and permits, and both operating and capital grans and contributions. General revenues consist of taxes, rent, investment income, and miscellaneous.

Financial Analysis of the County's Governmental Funds

The County uses fund accounting to ensure and demonstrate compliance with finance-related legal requirements.

Governmental Funds

As of the end of the current fiscal year, the County's governmental funds reported a combined ending fund balance of $21,526,362, an increase of $1,351,253, or 6.70%, from the prior year. Fund balance components have been classified as nonspendable, restricted, committed, assigned and/or unassigned based primarily on the extent to which the County is bound to observe constraints imposed on the use of the resources of each fund. Restricted fund balance is $7,721,070, or 35.87% of total. Spending of these resources is constrained by externally imposed (statutory, bond covenant, or grantors) limitations on their use. The largest restricted fund balances include $903,800 for multi-species conservation, $1,495,711 for capital projects, and $1,732,809 for public works.

Committed and assigned fund balances combined to represent 63.96% of total fund balance with spending constrained by either the Board of County Commissioners (for committed) or senior management (for assigned). Committed balances in the special revenue funds are primarily due to revenues directed by the Commission to those funds to support programs. The largest committed fund balances include $3,482,561 for the Lincoln County Water District and $3,565,468 for Lincoln County Land Act.

Major Funds

General Fund (Budgetary Basis): The General Fund is the chief operating fund of the County. At the end of the current fiscal year, the fund balance (budgetary basis) of the General Fund was $2,340,945, an increase of $1,387,742, or 145.59%. The General Fund revenues increased by $986,184, or 20.50%. Taxes increased by $28,483, or 1.27%. Intergovernmental increased by $927,602, or 55.30% due to the Coyote Springs dissolution. Charges for services increased by $60,644, or 20.51%, due to increased security contract and recorder fees. Fines and forfeitures decreased $107,353, or 29.66%. Miscellaneous revenues increased $76,429, or 35.70%, mostly due to increase investment income.

Expenditures decreased by $13,242, or 0.30%. General government expenditures decreased by $32,302, or 2.15% due to a decrease in grant administrator and clerk costs. Public safety expenditures increased by $33,974, or 2.00%, due to an increase in service and supplies for the sheriff's office. Judicial expenditures decreased by $24,403, or 2.17% due to a decrease in juvenile officers' wages and benefits.

Road Fund: The fund balance for the fund decreased by $73,505 to $801,769, or 8.40%. The Road fund expenditures increased by $204,973, or 28.76%, due to an increase in wages, benefits and services and supplies expenditures.

Lincoln County Water District Water Resources Fund: The Lincoln County Water District Water Resources Fund balance decreased by $60,028, or 2.11%, from the prior year. This was due to a transfer of $200,000 to the Water District General Fund.

Lincoln County Land Act Special Use Fund: The Lincoln County Land Act Special Use Fund balance decreased by $442,299, or 11.46% from the prior year. This was due to an increase in costs related to the Storm Area 51 event and compensated absence payments related to a reduction in staffing.

County Grant Fund: The County Grant Fund revenues decreased by $203,984, or 18.23%, and expenditures decreased by $151,891, or 13.46%. The decreases were due to receiving less grant monies in the current year.

Financial Analysis of the County's Enterprise Funds

Enterprise Funds provide the same type of information found in the government-wide financial statements, but in more detail. Unrestricted net position of the enterprise funds was a deficit of $2,940,974. Total net position for these funds decreased by $350,576 from the prior year.

The **Detention Center Fund**, a major fund, had operating revenues increase by $5,765, or 0.31%, due to an increase in inmate fees. Operating expenses increased by $212,785, or 11.12% due to an increase in salaries and benefits.

The **Solid Waste Fund**, a major fund, had operating revenues decrease by $27,385, or 4.29%, during the year. Operating expenses increased by $48,274, or 9.44%, due to an increase in depreciation expense due to the purchase of new equipment in the prior and current year.

General Fund Budgetary Highlights

The original budget (2019-20 Final Budget) was approved May 20, 2019.

Original budget compared to final budget: During the year there was a need for an amendment to increase original estimated revenues and original budgeted appropriations. There was also a need to make an amendment to reallocate appropriations among departments when it became clearer which departments would actually be charged for certain expenses. Generally, the movement of the appropriations between departments was not significant.

Final budget compared to actual results: The most significant differences for the General Fund were as follows:

Overall, the revenues received were more than budgeted by 19.68% or $953,017. Revenues received in excess of budgeted amounts were 52.94% for intergovernmental, 428.26% for miscellaneous, and 16.23% for licenses and permits. The shortfall in revenue sources was 2.40% for taxes, 6.83% for charges for services, and 29.27% for fines and forfeitures.

A review of actual expenditures compared to the appropriations in the final budget shows expenditures were $493,120 less than budgeted or 10.16%. Expenditures were under budget for all functions of the General Fund - general government 13.86%, public safety 4.50%, judicial 13.73%, and health 0.94%.

Actual fund balance (budgetary basis) of $2,340,945, was $154,352 lower than anticipated to begin the 2020-2021 year.

Capital Assets and Debt Administration

Capital Assets
The County's investment in capital assets, net of accumulated depreciation, at June 30, 2020, was $22,843,095 in governmental activities and $2,763,346 in business-type activities. A summary of changes in capital assets for the year ended June 30, 2020, follows:

Capital Assets (Continued)

Governmental Activities:

	Balance June 30, 2019	Additions	Dispositions	Balance June 30, 2020
Capital assets not being depreciated:				
Land	$ 1,809,860	$ -	$ -	$ 1,809,860
Capital assets being depreciated:				
Building and improvements	23,738,032	269,597	-	24,007,629
Infrastructure	2,150,970	-	-	2,150,970
Equipment	10,193,973	397,140	(1,658,209)	8,932,904
Total capital assets being depreciated	36,082,975	666,737	(1,658,209)	35,091,503
Less accumulated depreciation for:				
Building and improvements	7,894,600	863,884	-	8,758,484
Infrastructure	373,820	43,019	-	416,839
Equipment	5,902,803	428,944	(1,448,802)	4,882,945
Total accumulated depreciation	14,171,223	1,335,847	(1,448,802)	14,058,268
Total capital assets being depreciated, net	21,911,752	(669,110)	(209,407)	21,033,235
Governmental activities assets, net	$ 23,721,612	$ (669,110)	$ (209,407)	$ 22,843,095

Business-type Activities:

	Balance June 30, 2019	Additions	Dispositions	Balance June 30, 2020
Capital assets not being depreciated:				
Land	$ 214,000	$ -	$ -	$ 214,000
Capital assets being depreciated:				
Building and improvements	1,374,844	-	-	1,374,844
Utility system	1,435,264	11,776	(63,638)	1,383,402
Equipment	1,755,899	475,933	(333,412)	1,898,420
Total capital assets being depreciated	4,566,007	487,709	(397,050)	4,656,666
Less accumulated depreciation for:				
Building and improvements	427,586	44,175	-	471,761
Utility system	699,613	28,486	(7,674)	720,425
Equipment	1,004,357	106,358	(195,581)	915,134
Total accumulated depreciation	2,131,556	179,019	(203,255)	2,107,320
Total capital assets being depreciated, net	2,434,451	308,690	(193,795)	2,549,346
Business-type activities assets, net	$ 2,648,451	$ 308,690	$ (193,795)	$ 2,763,346

Major capital asset events during the current fiscal year included the following:

- Building and other improvements for the Airport and Trap Range.
- Equipment for the sheriff, general government, and other culture and recreation equipment.

Debt Administration

Changes in Long-term Debt: During the year ended June 30, 2020, the following changes occurred in long-term debt:

Governmental activities:

	Balance June 30, 2019	Net Additions	Net Deletions	Balance June 30, 2020	Due within One Year
Compensated absences	$ 422,068	$ -	$ 1,907	$ 420,161	$ 236,131
Net pension liability	7,600,013	-	235,186	7,364,827	-
OPEB obligation payable	334,948	71,150	-	406,098	-
Note payable	24,157	-	24,157	-	-
Capital lease payable	86,065	100,300	77,642	108,723	75,282
Total	$ 8,467,251	$ 171,450	$ 338,892	$ 8,299,809	$ 311,413

Business-type activities:

	Balance June 30, 2019	Net Additions	Net Deletions	Balance June 30, 2020	Due within One Year
Compensated absences	$ 227,116	$ -	$ 48,358	$ 178,758	$ 102,835
Net pension liability	3,615,370	-	263,416	3,351,954	-
OPEB obligation payable	93,697	21,209	-	114,906	-
Landfill closure and postclosure costs	60,000	20,000	-	80,000	-
Bond payable	188,119	-	10,630	177,489	3,440
Total	$ 4,184,302	$ 41,209	$ 322,404	$ 3,903,107	$ 106,275

The County's debt decreased by $167,442 for governmental activities during the current fiscal year. The reductions were mainly from a decrease in net pension liability.

The County's debt decreased by $281,195 for business-type activities during the current fiscal year. The primary reason for the decrease was a reduction in estimated compensated absences and net pension liability.

Additional information on the County's long-term debt can be found in (**Note D6**).

ECONOMIC FACTORS AND NEXT YEAR'S BUDGET AND RATES

The County approved the budget for the 2020-2021 year on May 18, 2020. The following factors were considered in the development of the budget.

- Assessed valuation for the County decreased and tax rates remained unchanged.
- The County, in planning for the budget year ending June 30, 2021, considered the implications of the Coronavirus (COVID-19) on County operations. Adjustments were made to the budget based on information known at the time of budget approval.

REQUESTS FOR INFORMATION

This financial report is designed to provide its users with a general overview of Lincoln County, Nevada's finances and to demonstrate the County's accountability for the revenues it receives. Any comments, further questions, or requests for additional information should be addressed to:

County Administration - Lincoln County, Nevada
PO Box 218
Pioche, Nevada 89043

BASIC FINANCIAL STATEMENTS

LINCOLN COUNTY, NEVADA
STATEMENT OF NET POSITION
June 30, 2020

	Primary Government		
	Governmental Activities	Business-type Activities	Total
Assets:			
Cash and cash equivalents	$ 20,891,915	$ 1,440,206	$ 22,332,121
Interest receivable	55,632	984	56,616
Taxes receivable	51,573	-	51,573
Special assessment receivable	79,764	-	79,764
Due from other governments	989,056	-	989,056
Due from others	20,128	-	20,128
Prepaid expense	33,554	-	33,554
Accounts receivable	-	313,689	313,689
Inventory	8,091	-	8,091
Interfund receivable	770,921	-	770,921
Restricted assets- Cash	-	94,777	94,777
Capital assets net of accumulated depreciation	22,843,095	2,763,346	25,606,441
Total assets	45,743,729	4,613,002	50,356,731
Deferred outflows of resources:			
Deferred pension charge	1,144,436	455,878	1,600,314
Deferred OPEB	23,141	5,728	28,869
Total deferred outflows of resources	1,167,577	461,606	1,629,183
Liabilities:			
Accounts payable	486,383	34,857	521,240
Accrued payroll and benefits	511,106	245,295	756,401
Customer deposits	-	90	90
Unearned revenue	216,742	-	216,742
Interest payable	12,659	9,462	22,121
Current portion of liabilities due within one year:			
Accrued compensated absences	236,131	102,835	338,966
Interfund payable	-	83,802	83,802
Lease payable	75,282	-	75,282
Current portion of liabilities payable from restricted assets:			
Bond payable	-	3,440	3,440
Long-term liabilities due or payable after one year:			
Accrued compensated absences	184,030	75,923	259,953
Landfill closure and postclosure costs	-	80,000	80,000
Interfund payable	-	687,119	687,119
Net pension liability	7,364,827	3,351,954	10,716,781
OPEB liability	406,098	114,906	521,004
Bond payable	-	174,049	174,049
Lease payable	33,441	-	33,441
Total liabilities	9,526,699	4,963,732	14,490,431
Deferred inflows of resources:			
Deferred pension charge	1,259,668	454,503	1,714,171
Net position:			
Invested in capital assets, net of debt	22,721,713	2,585,857	25,307,570
Restricted	7,721,070	11,490	7,732,560
Unrestricted	5,682,156	(2,940,974)	2,741,182
Total net position	$ 36,124,939	$ (343,627)	$ 35,781,312

The notes to the financial statements are an integral part of this statement.

LINCOLN COUNTY, NEVADA
STATEMENT OF ACTIVITIES
June 30, 2020

Functions/Programs	Expenses	Program Revenues: Charges for Services	Program Revenues: Operating Grants and Contributions	Program Revenues: Capital Grants and Contributions	Changes in Net Position: Governmental Activities	Changes in Net Position: Business-type Activities	Total
Primary governments:							
General government	$ (3,727,601)	$ 502,576	$ 402,788	$ -	$ (2,822,237)	$ -	$ (2,822,237)
Public safety	(2,248,318)	198,607	259,565	34,900	(1,755,246)	-	(1,755,246)
Judicial	(1,214,032)	363,150	-	-	(850,882)	-	(850,882)
Public works	(2,349,771)	66,542	19,292	105,914	(2,158,023)	-	(2,158,023)
Health	(371,633)	134,391	10,231	-	(227,011)	-	(227,011)
Welfare	(652,626)	-	196,402	46,472	(409,752)	-	(409,752)
Culture and recreation	(833,354)	-	21,563	152,883	(658,908)	-	(658,908)
Community support	(270,822)	24,982	165,055	-	(80,785)	-	(80,785)
Intergovernmental	(127,313)	-	-	-	(127,313)	-	(127,313)
Interest on long-term debt	(15,911)	-	-	-	(15,911)	-	(15,911)
Total governmental activities	(11,811,381)	1,290,248	1,074,896	340,169	(9,106,068)	-	(9,106,068)
Business-type activities:							
Building Department	(72,452)	22,144	-	-	-	(50,308)	(50,308)
Detention Center	(2,127,085)	1,873,065	-	-	-	(254,020)	(254,020)
Landfill	(559,611)	610,739	-	-	-	51,128	51,128
Pioche Public Utility	(625,532)	558,252	-	-	-	(67,280)	(67,280)
Total business-type activities	(3,384,680)	3,064,200	-	-	-	(320,480)	(320,480)
Total primary governments	$(15,196,061)	$4,354,448	$ 1,074,896	$ 340,169	(9,106,068)	(320,480)	(9,426,548)
General Revenues:							
Property taxes					3,183,017	-	3,183,017
Consolidated taxes					1,546,075	-	1,546,075
Fuel tax					1,731,672	-	1,731,672
Federal in-lieu tax					974,644	-	974,644
Gaming tax					127,467	-	127,467
Room tax					70,479	-	70,479
Marijuana fees					88,270	-	88,270
Tax penalties and costs					50,574	-	50,574
Excess proceeds					24,697	-	24,697
Fish and wildlife					3,298	-	3,298
Rent					135,208	-	135,208
National forest					14,947	-	14,947
Water sales					186,503	-	186,503
Coyote Springs GID dissolution					916,307	-	916,307
Loss on disposal of assets					(5,280)	-	(5,280)
Investment income (loss)					833,993	16,092	850,085
Miscellaneous					66,868	-	66,868
Capital fees					-	56,612	56,612
Custom fees					-	11,075	11,075
Special items					(516,980)	(223,875)	(740,855)
Operating transfers					(110,000)	110,000	-
Total general revenues and transfers					9,321,759	(30,096)	9,291,663
Change in net position					215,691	(350,576)	(134,885)
Net position - beginning of year					35,909,248	6,949	35,916,197
Net position - end of year					$ 36,124,939	$ (343,627)	$35,781,312

The notes to the financial statements are an integral part of this statement

LINCOLN COUNTY, NEVADA
BALANCE SHEET
GOVERNMENTAL FUNDS
June 30, 2020

	Major Funds						
	General Fund	Road Fund	Lincoln County Water District Water Resources	Lincoln County Land Act Special Use	County Grant	**Other Governmental Funds**	Totals
ASSETS							
Pooled cash and investments	$ 2,989,418	$ 680,946	$ 2,768,999	$ 2,997,926	$ 47,488	$ 11,407,138	$ 20,891,915
Interest receivable	7,729	1,068	$ 12,183	5,718	159	28,775	55,632
Taxes receivable	30,333	-	-	-	-	21,240	51,573
Special assessment receivable	-	-	-	-	-	79,764	79,764
Due from other governments	291,829	246,465	-	-	368,298	82,464	989,056
Due from others	-	-	-	-	-	20,128	20,128
Inventory	-	-	-	-	-	8,091	8,091
Prepaid expense	-	-	-	-	-	33,554	33,554
Interfund receivable	-	-	-	600,921	-	170,000	770,921
Total assets	$ 3,319,309	$ 928,479	$ 2,781,182	$ 3,604,565	$ 415,945	$ 11,851,154	$ 22,900,634
LIABILITIES							
Accounts payable	$ 76,882	$ 75,835	$ -	$ -	$ 95,871	$ 237,795	$ 486,383
Accrued payroll and benefits	220,587	50,875	-	186,817	19,422	33,405	511,106
Unearned revenues	-	-	-	-	120,912	95,830	216,742
Total liabilities	297,469	126,710	-	186,817	236,205	367,030	1,214,231
DEFERRED INFLOWS OF RESOURCES							
Unavailable revenue - property taxes	26,513	-	-	-	-	12,022	38,535
Unavailable revenue - grant	-	-	-	-	121,506	-	121,506
Total deferred inflows of resources	26,513	-	-	-	121,506	12,022	160,041
FUND BALANCE							
Nonspendable	-	-	-	-	-	40,091	40,091
Restricted for:							
Capital projects	-	-	-	-	-	1,495,711	1,495,711
Unincorporated towns	-	-	-	-	-	347,694	347,694
Multi-species conservation	-	-	-	-	-	903,800	903,800
Stabilization	137,113	-	-	-	-	-	137,113
Rachel Jones Cemetery	827	-	-	-	-	-	827
General government	357,965	-	-	-	-	71,619	429,584
Coyote Springs GID dissolution	916,307	-	-	-	-	-	916,307
Public safety	-	-	-	-	-	51,290	51,290
Judicial	-	-	-	-	-	286,906	286,906
Public works	-	801,769	-	-	-	931,040	1,732,809
Health	-	-	-	-	-	167	167
Welfare	-	-	-	-	-	889,039	889,039
Culture and recreation	-	-	-	-	-	267,951	267,951
Community support	-	-	-	-	-	258,275	258,275
Intergovernmental	-	-	-	-	-	3,597	3,597
Committed for:							
Land act	9,408	-	-	3,417,748	-	138,312	3,565,468
Water	66,451	-	-	-	-	2,864,529	2,930,980
Lincoln County Water District	-	-	2,781,182	-	-	701,379	3,482,561
General government	-	-	-	-	58,234	2,166,944	2,225,178
Public works	-	-	-	-	-	23,382	23,382
Health	-	-	-	-	-	33,571	33,571
Planning	43,603	-	-	-	-	-	43,603
Flood control	39,015	-	-	-	-	-	39,015
Assigned for:							
Subsequent year	1,424,638	-	-	-	-	-	1,424,638
Unassigned:	-	-	-	-	-	(3,195)	(3,195)
Total fund balance	2,995,327	801,769	2,781,182	3,417,748	58,234	11,472,102	21,526,362
Total liabilities, deferred inflows of resources, and fund balance	$ 3,319,309	$ 928,479	$ 2,781,182	$ 3,604,565	$ 415,945	$ 11,851,154	$ 22,900,634

The notes to the financial statements are an integral part of this statement.

LINCOLN COUNTY, NEVADA
RECONCILIATION OF THE GOVERNMENTAL FUNDS BALANCE SHEET
TO THE STATEMENT OF NET POSITION
June 30, 2020

Total fund balance - governmental funds	**$**	**21,526,362**
Amounts reported for governmental activities in the Statement of Net Position are different because:		
Capital assets, net of the related depreciation, are not reported in the Governmental Funds financial statements because they are not current financial resources, but they are reported in the Statement of Net Position.		22,843,095
Other long-term assets which are not available to pay for current period expenditures and, therefore, are deferred in the funds.		160,041
Certain liabilities (such as bonds payable and capital leases payable) are not reported in the Governmental Funds financial statements because they are not due and payable, but they are presented as liabilities in the Statement of Net Position.		(541,543)
The County's other post-employment benefits liabilities as well as other post-employment benefits-related deferred outflows and deferred inflows of resources are recognized in the government-wide statements and include:		
Deferred outflows from other post-employment benefits.		23,141
Total other post-employment benefits liability.		(406,098)
The County's proportionate share of net pension assets and liabilities as well as pension-related deferred outflows and deferred inflows of resources are recognized in the government-wide statements and include:		
Deferred outflows from pension activity		1,144,436
Net pension liability		(7,364,827)
Deferred inflows from pension activity		(1,259,668)
Total net position - governmental activities	**$**	**36,124,939**

The notes to the financial statements are an integral part of this statement.

LINCOLN COUNTY, NEVADA
STATEMENT OF REVENUES, EXPENDITURES,
AND CHANGES IN FUND BALANCES
GOVERNMENTAL FUNDS
Year Ended June 30, 2020

	Major Funds						
	General Fund	Road Fund	Lincoln County Water District Water Resources	Lincoln County Land Act Special Use	County Grant	**Other Governmental Funds**	Totals
Revenues:							
Taxes	$ 2,268,713	$ -	$ -	$ -	$ -	$ 983,903	$ 3,252,616
Licenses and permits	21,096	-	-	-	-	4,855	25,951
Intergovernmental	2,605,091	1,623,351	-	10,871	915,171	1,564,939	6,719,423
Charges for services	371,207	-	-	-	-	615,490	986,697
Fines and forfeitures	254,615	-	-	-	-	30,503	285,118
Special assessment	-	-	-	-	-	186,003	186,003
Miscellaneous	320,823	17,464	139,972	130,986	1,321	470,572	1,081,138
Total revenues	5,841,545	1,640,815	139,972	141,857	916,492	3,856,265	12,536,946
Expenditures:							
Current:							
General government	1,545,191	-	-	584,307	335,427	1,183,637	3,648,562
Public safety	1,731,728	-	-	-	234,932	39,935	2,006,595
Judicial	1,098,278	-	-	-	-	112,845	1,211,123
Public works	83,622	1,615,320	-	-	125,206	75,228	1,899,376
Health	61,876	-	-	-	-	252,704	314,580
Welfare	-	-	-	-	106,227	524,842	631,069
Culture and recreation	-	-	-	-	174,446	345,391	519,837
Community support	-	-	-	-	-	247,029	247,029
Intergovernmental	-	-	-	-	-	127,313	127,313
Capital projects	-	-	-	-	-	148,804	148,804
Debt service:							
Principal	-	-	-	-	-	101,799	101,799
Interest	-	-	-	-	-	7,053	7,053
Total expenditures	4,520,695	1,615,320	-	584,307	976,238	3,166,580	10,863,140
Excess (deficiency) of revenues over expenditures	1,320,850	25,495	139,972	(442,450)	(59,746)	689,685	1,673,806
Other financing sources (uses):							
Operating transfers in	75,000	-	-	151	53,835	563,811	692,797
Operating transfers out	(50,000)	(100,000)	(200,000)	-	-	(452,797)	(802,797)
Sale of capital assets	-	1,000	-	-	-	-	1,000
Capital lease proceeds	-	-	-	-	-	100,300	100,300
Total other financing sources (uses)	25,000	(99,000)	(200,000)	151	53,835	211,314	(8,700)
Net change in fund balance before special items	1,345,850	(73,505)	(60,028)	(442,299)	(5,911)	900,999	1,665,106
Special items:							
Disposal of Tri-County Weed Control	-	-	-	-	-	(313,853)	(313,853)
Net change in fund balance	1,345,850	(73,505)	(60,028)	(442,299)	(5,911)	587,146	1,351,253
Fund balance:							
Beginning of year	1,649,477	875,274	2,841,210	3,860,047	64,145	10,884,956	20,175,109
End of year	$ 2,995,327	$ 801,769	$ 2,781,182	$ 3,417,748	$ 58,234	$ 11,472,102	$ 21,526,362

The notes to the financial statements are an integral part of this statement.

LINCOLN COUNTY, NEVADA
RECONCILIATION OF THE STATEMENT OF REVENUES, EXPENDITURES AND CHANGES IN FUND BALANCES OF GOVERNMENTAL FUNDS TO THE STATEMENT OF ACTIVITIES
Year Ended June 30, 2020

Net Change in Fund Balance - Governmental Funds	**$**	**1,351,253**
Amounts reported for governmental activities in the Statement of Activities are different because:		
Capital outlays to purchase or build capital assets are reported in Governmental Funds financial statements as expenditures. However, for governmental activities those costs are shown in the Statement of Net Position and allocated over the estimated useful lives as annual depreciation expenses in the Statement of Activities.		(878,517)
Property taxes and grant revenues that are collected in the time to pay obligations of the current period are reported as revenue in the fund statements. However, amounts that related to prior periods that first become available in the current period should not be reported as revenue in the statement of activities.		122,386
The issuance of long-term debt (e.g., bonds, leases) provides current financial resources to governmental funds, while the repayment of the principal of long-term debt consumes the current financial resources of governmental funds. Neither transaction, however, has any effect on net position. Also, governmental funds report the effect of issuance costs, premiums, discounts, and other similar items when debt is first issued, whereas these amounts are deferred and amortized in the Statement of Activities. This amount is the net effect of these differences in the treatment of long-term debt and related items.		(6,951)
Generally, expenditures recognized in the fund financial statements are limited to only those that use current financial resources, but expenses are recognized in the statement of activities when incurred.		1,499
Net differences between other post-employment benefits contributions recognized in the fund statement of revenues, expenditures, and changes in fund balances and the Statement of Activities:		
Other post-employment benefits contributions made after measurement date (2020 contributions).		23,141
Net other post-employment benefits expense.		(107,059)
Net differences between pension system contributions recognized in the fund statement of revenues, expenditures, and changes in fund balances and the statement of activities:		
Pension contributions made after measurment date (2020 contributions).		447,504
Net pension expense.		(737,565)
Change in net position of governmental activities	**$**	**215,691**

The notes to the financial statements are an integral part of this statement.

LINCOLN COUNTY, NEVADA
STATEMENT OF NET POSITION
PROPRIETARY FUNDS
June 30, 2020

	Major Fund		Nonmajor Enterprise Funds	Total Enterprise Funds
	Detention Center	Solid Waste		
ASSETS				
Current assets:				
Pooled cash and investments	$ 59,969	$ 640,194	$ 740,043	$ 1,440,206
Accounts receivable	148,575	131,219	33,895	313,689
Interest receivable	-	133	851	984
Total current assets	208,544	771,546	774,789	1,754,879
Restricted assets:				
Cash	-	83,287	11,490	94,777
Capital assets:				
Land	-	200,000	14,000	214,000
Property, plant and equipment (net of depreciation)	787,218	771,259	990,869	2,549,346
Total capital assets	787,218	971,259	1,004,869	2,763,346
Total assets	995,762	1,826,092	1,791,148	4,613,002
DEFERRED OUTFLOWS OF RESOURCES				
Deferred pension charge	399,544	20,066	36,268	455,878
Deferred OPEB	-	-	5,728	5,728
Total deferred outflows of resources	399,544	20,066	41,996	461,606
LIABILITIES				
Current liabilities:				
Accounts payable	11,194	7,525	16,138	34,857
Accrued payroll and benefits	212,007	17,898	15,390	245,295
Customer deposits	-	-	90	90
Accrued compensated absences	77,624	8,702	16,509	102,835
Interfund payable	-	83,802	-	83,802
Accrued interest payable	-	8,174	1,288	9,462
Total current liabilities	300,825	126,101	49,415	476,341
Current liabilities payable from restricted assets:				
Revenue bond	-	-	3,440	3,440
Non-current liabilities:				
Accrued compensated absences	56,210	5,801	13,912	75,923
Landfill closure and postclosure costs	-	80,000	-	80,000
Interfund payable	-	687,119	-	687,119
Net pension liability	3,126,874	-	225,080	3,351,954
OPEB liability	-	-	114,906	114,906
Revenue bond	-	-	174,049	174,049
Total non-current liabilities	3,183,084	772,920	527,947	4,483,951
Total liabilities	3,483,909	899,021	580,802	4,963,732
DEFERRED INFLOWS OF RESOURCES				
Deferred pension charge	414,682	3,749	36,072	454,503
NET POSITION				
Invested in capital assets, net of related debt	787,218	971,259	827,380	2,585,857
Restricted for revenue bond debt service	-	-	11,490	11,490
Unrestricted	(3,290,503)	(27,871)	377,400	(2,940,974)
Total net position	$ (2,503,285)	$ 943,388	$ 1,216,270	$ (343,627)

The notes to the financial statements are an integral part of this statement.

LINCOLN COUNTY, NEVADA
STATEMENT OF REVENUES, EXPENSES, AND CHANGES IN NET POSITION
PROPRIETARY FUNDS
For the Year Ended June 30, 2020

	Major Fund		Nonmajor	Total
	Detention Center	Solid Waste	Enterprise Funds	Enterprise Funds
Operating revenues:				
Charges for services	$ 1,873,065	$ 610,739	$ 580,396	$ 3,064,200
Operating expenses:				
Salaries and wages	1,121,479	241,228	166,118	1,528,825
Employee benefits	642,605	95,898	119,389	857,892
Services and supplies	318,714	109,723	345,985	774,422
Closure and postclosure landfill costs	-	20,000	-	20,000
Depreciation	44,287	92,762	41,970	179,019
Total operating expenses	2,127,085	559,611	673,462	3,360,158
Operating income (loss)	(254,020)	51,128	(93,066)	(295,958)
Non-operating revenues (expenses):				
Investment income	-	2,169	13,923	16,092
Operating transfers in	60,000	-	50,000	110,000
Capital fees	-	-	56,612	56,612
Custom fees	-	-	11,075	11,075
Interest expense	-	(15,363)	(9,159)	(24,522)
Total non-operating revenues (expenses)	60,000	(13,194)	122,451	169,257
Change in net position before special items	(194,020)	37,934	29,385	(126,701)
Special items:				
Sale of electric operations:	-	-	(223,875)	(223,875)
Change in net position	(194,020)	37,934	(194,490)	(350,576)
Net position:				
Beginning of year	(2,309,265)	905,454	1,410,760	6,949
End of year	$ (2,503,285)	$ 943,388	$ 1,216,270	$ (343,627)

The notes to the financial statements are an integral part of this statement.

LINCOLN COUNTY, NEVADA
STATEMENT OF CASH FLOWS
PROPRIETARY FUNDS
For the Year Ended June 30, 2020

	Major Fund		Nonmajor	Total
	Detention Center	Solid Waste	Enterprise Funds	Enterprise Funds
Cash flows from operating activities:				
Cash received from customers	$ 1,885,294	$ 621,574	$ 623,966	$ 3,130,834
Cash paid for services and supplies	(329,385)	(112,758)	(369,504)	(811,647)
Cash paid for salaries and benefits	(1,690,694)	(336,042)	(428,924)	(2,455,660)
Net cash provided (used) by operating activities	(134,785)	172,774	(174,462)	(136,473)
Cash flows from noncapital financing activities:				
Operating transfers in/out	60,000	-	50,000	110,000
Cash flows from capital and related financing activities: financing activities:				
Purchases of capital assets	-	(475,933)	(11,775)	(487,708)
Capital fees	-	-	56,612	56,612
Custom fees	-	-	11,075	11,075
Interfund payable	-	410,921	-	410,921
Debt retirement	-	-	(10,630)	(10,630)
Interest paid	-	(7,189)	(9,183)	(16,372)
Net cash provided (used) by capital and related financing activities	-	(72,201)	36,099	(36,102)
Cash flows from investing activities:				
Investment income	-	2,169	13,830	15,999
Net change in cash and cash equivalents	(74,785)	102,742	(74,533)	(46,576)
Cash:				
Beginning of year	134,754	620,739	826,066	1,581,559
End of year	$ 59,969	$ 723,481	$ 751,533	$ 1,534,983
Reconciliation of operating income (loss) to net cash provided (used) by operating activities:				
Operating income (loss)	$ (254,020)	$ 51,128	$ (93,066)	$ (295,958)
Adjustments to reconcile operating income (loss) to net cash provided (used) by operating activities:				
Depreciation expense	44,287	92,762	41,970	179,019
(Increase) decrease in accounts receivable	12,229	10,835	51,600	74,664
Increase (decrease) in accounts payable	(10,671)	(3,035)	(23,519)	(37,225)
Increase (decrease) in accrued payroll and benefits	80,371	2,053	(4,415)	78,009
Increase (decrease) in compensated absences	(42,831)	361	(5,888)	(48,358)
Increase (decrease) in land fill costs	-	20,000	-	20,000
Increase (decrease) in net pension liability	(120,876)	-	(142,540)	(263,416)
Increase (decrease) in net pension expense	156,726	(1,330)	18,740	174,136
Increase (decrease) in OPEB liability	-	-	21,209	21,209
Increase (decrease) in OPEB pension expense	-	-	(442)	(442)
Increase (decrease) in customer deposits	-	-	(8,030)	(8,030)
Loss on special and extraordinary items	-	-	(30,081)	(30,081)
Total adjustments	119,235	121,646	(81,396)	159,485
Net cash provided (used) by operating activities	$ (134,785)	$ 172,774	$ (174,462)	$ (136,473)

The notes to the financial statements are an integral part of this statement.

LINCOLN COUNTY, NEVADA
FIDUCIARY FUNDS
STATEMENT OF NET POSITION
June 30, 2020

	Investment Trust Fund	Agency
ASSETS		
Pooled cash and investments	$ 3,196,587	$ 930,646
Interest receivable	-	10,581
Taxes receivable	-	53,145
Due from other governments	-	59,956
Total assets	$ 3,196,587	$ 1,054,328
LIABILITIES		
Amount held for others	$ -	$ 1,007,232
Unavailable revenue - taxes	-	47,096
Total liabilities	-	1,054,328
NET POSITION		
Held in trust for pool participants	$ 3,196,587	$ -

The notes to the financial statements are an integral part of this statement.

LINCOLN COUNTY, NEVADA
FIDUCIARY FUNDS
STATEMENT OF CHANGES IN FIDUCIARY NET POSITION
June 30, 2020

	Investment Trust Fund
Additions:	
Investment earnings	$ 132,452
Net change in fair value of investments	-
Total additions	132,452
Capital share transactions	(726,567)
Change in net position	(594,115)
Net position:	
Beginning of year	3,790,702
End of year	$ 3,196,587

The notes to the financial statements are an integral part of this statement.

NOTE A. SUMMARY OF SIGNIFICANT ACCOUNTING POLICIES

The County financial statements are prepared in accordance with generally accepted accounting principles (GAAP). The Governmental Accounting Standards Board (GASB) is responsible for establishing GAAP for state and local governments through its pronouncements (Statements and Interpretations).

1. Reporting Entity

Lincoln County, Nevada, is governed by an elected five-member board. As required by generally accepted accounting principles, these financial statements present Lincoln County, Nevada (the primary government), and its component units. Blended component units, although legally separate entities are, in substance, part of the County's operations. Thus, blended component units are appropriately presented as funds of the primary government.

2. Blended Component Units

Component units are legally separate organizations for which the County is financially accountable. Lincoln County Water District, Alamo Town, Panaca Town, and Pioche Town are all component units that are part of the County's reporting entity because the County is financially accountable for these entities. Financial accountability is determined primarily by the fact that as the governing body, the County's Board of Commissioners can impose its will on significant aspects of the operations of these entities. These entities are presented as blended component units since the operations of these entities are considered part of County operations.

3. Description of Government-Wide Financial Statements

The government-wide financial statements (i.e., the statement of net position and the statement of activities) report information on all of the nonfiduciary activities of the County and its component units. All fiduciary activities are reported only in the fund financial statements. *Governmental activities,* which normally are supported by taxes, intergovernmental revenues, and other nonexchange transactions, are reported separately from *business-type activities*, which rely to a significant extent on fees and charges to external customers for support.

4. Basis of Presentation - Government-wide Financial Statements

While separate government-wide and fund financial statements are presented, they are interrelated. The governmental activities column incorporates data from governmental funds, while business-type activities incorporate data from the County's enterprise funds. Separate financial statements are provided for governmental funds, proprietary funds (enterprise funds), and fiduciary funds, even though the fiduciary funds are excluded from the government-wide financial statements. As a general rule, the effect of interfund activity has been eliminated from the government-wide financial statements.

The Statement of Net Position presents the consolidated financial position of the County at year-end, in separate columns, for both governmental and business-type activities.

The Statement of Activities demonstrates the degree to which the direct expenses of a given function or programs are offset by program revenues. Direct expenses are those that are specifically associated with a program or service and are, therefore, clearly identifiable to a particular function. Amounts reported as program revenues include 1) charges to customers or applicants who purchase, use, or directly benefit from goods, services, or privileges provided by a given function or segment and 2) grants and contributions (including special assessments) that are restricted to meeting the operational or capital requirements of a particular function or segment. Taxes and other revenues properly not included among program revenues are reported instead as general revenues. This statement provides a net cost or net revenue of specific programs and functions within the County. Those functions with a net cost are generally dependent on general-purpose tax revenues, such as property tax, to remain operational.

NOTE A. SUMMARY OF SIGNIFICANT ACCOUNTING POLICIES (Continued)

5. Basis of Presentation - Fund Financial Statements

The fund financial statements provide information about the County's funds, including its fiduciary funds and blended component units. Separate statements for each fund category – governmental, proprietary (enterprise), and fiduciary – are presented. The emphasis of fund financial statements is on major governmental and enterprise funds, each displayed in a separate column. All remaining governmental and enterprise funds are aggregated and reported as nonmajor funds. Major individual governmental and enterprise funds are reported as separate columns in the fund financial statements.

The County reports the following major governmental funds:

General Fund - The General Fund is the County's primary operating fund. It accounts for all financial resources of the general County, except those accounted for in another fund.

Road Fund - The Road Fund is used to account for gas tax revenues allocated for the construction, repair and maintenance of County roads.

Lincoln County Water District Water Resources Fund - The Lincoln County Water District Water Resources Fund is used to account for general activities of the District, a blended component unit of the government.

Lincoln County Land Act Special Use Fund - The Lincoln County Land Act Special Use Fund is used to account for land sale monies to be spent per ordinances.

County Grant Fund - The County Grant Fund is used to account for monies received to be spent on a specified purpose.

The County reports the following major enterprise fund:

Detention Center Fund - The Detention Center fund is used to account for the activities of the Lincoln County Detention Center, providing detention services for local governments within Nevada.

Solid Waste – The Solid Waste fund is used to account for solid waste disposal throughout the County and land fill operations.

Additionally, the County reports the following fiduciary fund:

Investment Trust – The investment trust fund is an external investment pool operated by the Lincoln County Treasurer. Participants include Caliente City, Lincoln County School District, Range, Panaca Fire Protection District, Pahranagat Fire District, Coyote Springs GID, Pioche Fire District, Southeastern Lincoln County Habitat Conservation Plan GID, and the Lincoln County Fire District.

Agency Funds – The Agency Fund is used to account for assets held by the County in an agency capacity for others and cannot be used to support the government's own programs.

During the course of operations, the County has activity between funds for various purposes. Any residual balances outstanding at year end are reported as due from/to other funds and advances to/from other funds. While these balances are reported in fund financial statements, certain eliminations are made in the preparation of the government-wide financial statements. Balances between the funds included in the governmental activities are eliminated so that only the net amount is included as internal balances in the governmental activities column. Similarly, balances between the funds included in business-type activities (i.e., enterprise funds) are eliminated so that only the net amount is included as internal balances in the business-type activities column.

NOTE A. SUMMARY OF SIGNIFICANT ACCOUNTING POLICIES (Continued)

5. Basis of Presentation - Fund Financial Statements (Continued)

Further, certain activity occurs during the year involving transfers of resources between funds. In fund financial statements these amounts are reported as transfers in/out. While reported in fund financial statements, certain eliminations are made in the preparation of government-wide financial statements. Transfers between the funds included in governmental activities are eliminated so that only the net amount is included as transfers in the governmental activities column. Similarly, balances between the funds included in business-type activities are eliminated so that only the net amount is included as transfers in the business-type activities column.

6. Measurement Focus and Basis of Accounting

The accounting and financial reporting treatment is determined by the applicable measurement focus and basis of accounting. Measurement focus indicates the type of resources being measured such as current financial resources or economic resources. The basis of accounting indicates the timing of events for recognition in the financial statements.

The government-wide financial statements are reported using the economic resources measurement focus and the accrual basis of accounting, as are the proprietary fund and fiduciary fund financial statements. Revenues are recorded when earned and expenses are recorded when a liability is incurred, regardless of the timing of related cash flows. Property taxes are recognized as revenues in the year for which they are levied. Grants and similar items are recognized as revenue as soon as all eligibility requirements imposed by the provider have been met.

The governmental fund financial statements are reported using the current financial resources measurement focus and the modified accrual basis of accounting. Revenues are recognized as soon as they are both measurable and available. Gross receipts and sales taxes are considered “measurable” when in the hands of intermediary collecting governments and are then recognized as revenue. The government considers revenues to be “available” if they are collected within 60 days of the end of the current fiscal period. Anticipated refunds of taxes are recorded as liabilities and reductions of revenue when they are measurable and the payment seems certain. In general, expenditures are recorded when liabilities are incurred. The exception to this rule is that principal and interest on debt service, as well as liabilities related to compensated absences and claims and judgments, are recorded when payment is due. General capital asset acquisitions are reported as expenditures in governmental funds. Issuance of long-term debt and acquisitions under capital leases are reported as other financing sources.

The major revenue sources of the County include consolidated taxes (including sales tax), fuel taxes, intergovernmental revenue, and property taxes. Property taxes, sales taxes, licenses, and interest associated with the current fiscal period are all considered to be susceptible to accrual and so have been recognized as revenues of the current fiscal period. Expenditure-driven grants are recognized as revenue when the qualifying expenditures have been incurred and all other eligibility requirements have been met, and the amount is received during the period or within the availability period for this revenue source (within 60 days of year-end). All other revenue items are considered to be measurable and available only when cash is received by the County.

The proprietary funds are reported using the economic resources measurement focus and the accrual basis of accounting. The agency fund has no measurement focus but utilizes the accrual basis of accounting for reporting its assets and liabilities. Proprietary funds distinguish operating revenues and expenses from non-operating items. Operating revenues and expenses generally result from providing services and producing and delivering goods in connection with a proprietary fund’s principal ongoing operations. The principal operating revenues of the Pioche Public Utility funds are customer charges. Operating revenues for the Building fund come from charges for services for building inspections and permits. The Detention Center receives revenue for housing prisoners of other governments. Expenses are those required to provide the service. The Solid Waste fund is used to account for solid waste disposal throughout the County and landfill operations. All revenues and expenses not meeting this definition are reported as non-operating revenues and expenses.

NOTE A. SUMMARY OF SIGNIFICANT ACCOUNTING POLICIES (Continued)

7. Budgetary Basis of Accounting

Annual budgets are adopted on a basis consistent with generally accepted accounting principles for governmental funds.

a. The statutes provide for the following timetable in adoption of budgets:

(i) Before April 15, the County submits to the Nevada State Department of Taxation a tentative budget for the upcoming fiscal year. The tentative budget includes proposed expenditures and the means to finance them.

(ii) A public hearing must be held by the County Commissioners no sooner than the third Monday in May and no later than the last day in May. Notice of the public hearing must be published once in the local newspaper not more than 14 nor less than 7 days before the hearing.

(iii) On or before June 1, the County Commissioners must adopt a final budget.

b. NRS 354.598005 (1) - provides that the County Commissioners may augment the budget at any time by a majority vote of the Commissioners providing the Commission publish notice of its intention to act in a newspaper of general circulation in the County at least three days before the date set for adoption of the resolution.

c. Nevada Revised Statute 354.598005 (5) allows appropriations to be transferred between functions, funds or contingency accounts if such a transfer does not increase the total appropriation for any fiscal year and is not in conflict with other statutory provisions. The County Auditor may transfer appropriations within any function. The County Auditor may also transfer appropriations between functions or programs within a fund, if the County Commissioners are advised of the action at the next regular meeting; and the action is recorded in the official minutes of the meeting. The County Commissioners may authorize the transfer of appropriations between funds or from the contingency account if the County Commissioners announce the transfer of appropriations at a regularly scheduled meeting and sets forth the exact amounts to be transferred and the accounts, functions, programs and funds affected. The County Commissioners must also set forth its reasons for the transfer; and the action must be recorded in the official minutes of the meeting.

d. Statutory regulations require budget control to be exercised at the function level within the funds.

e. The following funds were augmented during the year: County Grants, and Resource Development Funds had automatic budget augmentations for grant revenue. Panaca Town and Ambulance Funds were augmented during the year for higher than anticipated revenues. Vehicle Capital Projects Fund was augmented for capital lease proceeds.

f. Generally, budgets for all funds are adopted in accordance with generally accepted accounting principles. Budgeted amounts reflected in the accompanying financial statements recognize amendments made during the year.

g. All appropriations lapse at the end of the fiscal year.

NOTE A. SUMMARY OF SIGNIFICANT ACCOUNTING POLICIES (Continued)

8. Assets, Liabilities, Deferred Outflows/Inflows of Resources, and Net Position/Fund Balance

a. Cash and Cash Equivalents

The County's cash and cash equivalents are considered to be cash on hand, demand deposits, and short term investments with original maturities of three months or less from the date of acquisition. Cash includes cash deposited in interest-bearing accounts at banks and cash in the custody of fiscal agents of the County.

b. Investments

Investments are stated at fair value on the Balance Sheet. Fair value is the amount at which a financial instrument could be exchanged in a current transaction between willing parties other than in a forced or liquidation sale. Changes in the fair value of County investments are part of investment income which is included in revenue from local sources on the Statement of Activities and the Statement of Revenues, Expenditures, and Changes in Fund Balances of governmental funds. (**See Note D1**)

Nevada Revised Statutes authorize the County to invest in:

1. Obligations of the U.S. Treasury and U.S. Agencies in which the maturity dates do not exceed more than 10 years from the date of purchase.

2. Negotiable certificates of deposit issued by commercial banks or insured savings and loan associations (those over $250,000 must be fully collateralized).

3. Negotiable notes or short-term negotiable bonds issued by local governments within Nevada.

4. Eligible bankers' acceptances that do not exceed 270 days maturity and do not exceed 20 percent of the portfolio.

5. Commercial paper with a rating of A-1 or P-1 that does not exceed 240 days maturity and does not exceed 20 percent of the portfolio.

6. The State of Nevada's Local Government Investment Pool.

7. Repurchase agreements that are collateralized at 102 percent of the repurchase price and do not exceed 90 days maturity. Securities used for collateral must meet the criteria listed above.

8. Money market mutual funds which are rated as "AAA" or its equivalent and invest only in securities issued by the Federal Government, U.S. Agencies, or repurchase agreements fully collateralized by such securities.

9. Obligations issued or unconditionally guaranteed by the International Bank for Reconstruction and Development or obligations publicly issued in the United States by a foreign financial entity registered with the Securities and Exchange Commission, denominated in dollars with a maturity of 5 years or less with a rating of "AA" or better.

c. Property Tax

Taxes on real property are levied on July 1st of each year and are due on the third Monday in July. They can be paid in quarterly installments in August, October, January, and March. In the event of nonpayment, the County Treasurer is authorized to hold the property for two years, subject to redemption upon payment of taxes, penalties, and costs, together with interest at a rate of 10 percent per year from the date the taxes were due until paid. If delinquent taxes are not paid within the two year redemption period, the County Treasurer obtains a deed to the property free of all encumbrances. Upon receipt of a deed, the County Treasurer may sell the property to satisfy the tax lien.

NOTE A. SUMMARY OF SIGNIFICANT ACCOUNTING POLICIES (Continued)

8. Assets, Liabilities, Deferred Outflows/Inflows of Resources, and Net Position/Fund Balance (Continued)

c. Property Tax (Continued)

Article X, Section 2 of the Constitution of the State of Nevada limits the total taxes levied by all overlapping governmental units within the boundaries of any County (i.e., the County, the County School District, the State and any other City, Town, or Special District) to an amount not to exceed $5 per $100 of assessed valuation of the property being taxed. The Nevada Legislature enacted provisions whereby the combined overlapping tax rate was limited to $3.64 per $100 of assessed valuation.

d. Inventories and Prepaid Items

Inventories are valued at cost using the first-in/first-out (FIFO) method. The cost of such inventories is recorded as expenditures/expenses when consumed rather than when purchased.

Certain payments to vendors reflect costs applicable to future accounting periods and are recorded as prepaid items in both the government-wide and fund financial statements.

e. Restricted Assets

Certain cash assets of the Enterprise Funds are from revenue for specific use by the Enterprise Funds and are classified as restricted assets because their use is restricted by agreement. **(See Note D5)**

f. Capital Assets

Capital assets, which include property, plant and equipment, and infrastructure assets (e.g., roads, bridges, sidewalks, and similar items), are reported in the applicable governmental or business-type activities columns in the government-wide financial statements. Capital assets are defined by the County as assets with an initial individual cost of more than $500 and an estimated useful life in excess of one year.

If purchased or constructed, capital assets are recorded at historical cost or estimated historical cost and updated for additions and retirements during the year. Donated capital assets are valued at their estimated value as of the date of donation. The costs of normal maintenance and repairs that do not add to the value of the asset or materially extend the life of the asset are not capitalized.

Land and construction in progress are not depreciated. The other property, plant and equipment of the primary government are depreciated using the straight line method over the following estimated useful lives:

Capital Assets	Years
Vehicles	10
Equipment	5-20
Buildings and Improvements	20-50
Infrastructure	25-50

The County is required to report and depreciate new infrastructure assets. Infrastructure assets include roads, bridges, underground pipe (other than related to utilities), traffic signals, etc. Neither their historical cost nor related depreciation has historically been reported in the financial statements. The County is required to capitalize and report its major general infrastructure assets acquired in fiscal years ending after June 30, 1980. In addition, infrastructure assets acquired before June 30, 1980, that received significant reconstruction must be capitalized.

NOTE A. SUMMARY OF SIGNIFICANT ACCOUNTING POLICIES (Continued)

8. Assets, Liabilities, Deferred Outflows/Inflows of Resources, and Net Position/Fund Balance (Continued)

g. Deferred Outflows/Inflows of Resources

In addition to assets, the statement of financial position will sometimes report a separate section for deferred outflows of resources. This separate financial statement element, deferred outflows of resources, represents consumption of net position that applies to a future period(s) and so will not be recognized as an outflow of resources (expense/expenditure) until then. Deferred outflows include the County's pension related contributions subsequent to the measurement date but before the end of the fiscal year and changes in proportion of the District's contributions to the County's proportionate contributions.

In addition to liabilities, the statement of financial position will sometimes report a separate section for deferred inflows of resources. This separate financial statement element, deferred inflows of resources, represents an acquisition of net position that applies to a future period(s) and so will not be recognized as an inflow of resources (revenue) until that time. The County has only one type of item, which arises only under a modified accrual basis of accounting, which qualifies for reporting in this category. Accordingly, the item, unavailable revenue, is reported only in the governmental funds balance sheet. The governmental funds report unavailable revenues from one source, property taxes. This amount is deferred and recognized as an inflow of resources in the period that the amounts become available.

Deferred inflows of resources represent an acquisition of net positon that applies to a future period and will not be recognized as an inflow of resources (revenue) until that time. The difference between projected and actual experience and investment earnings are related to the deferred inflows of pensions and the calculation of net pension liability reported on the statement of net position.

For purposes of measuring the net pension liability, deferred outflows of resources and deferred inflows of resources related to pensions, and pension expense, information about the fiduciary net position of the Public Employees' Retirement System of Nevada (PERS) and additions to/deductions from PERS's fiduciary net position have been determined on the same basis as they are reported by PERS. For this purpose, benefit payments are recognized when due and payable in accordance with the benefit terms. Investments are reported at fair value.

h. Governmental Fund Balances:

In the governmental fund financial statements, fund balances are classified as follows:

(i.) **Nonspendable –** Amounts that cannot be spent either because they are in a nonspendable form or because they are legally or contractually required to be maintained intact, such as inventories and prepaids.

(ii.) **Restricted –** Amounts that can be spent only for a specific purpose because of the state or federal laws, or externally imposed conditions by grantors or creditors.

(iii.) **Committed –**These amounts can only be used for specific purposes as set forth by the County Commissioners. The Commissioners must take formal action (vote approval by the majority), in order to establish an ending fund balance commitment for any specific purpose. Formal Commission action is also required to modify or rescind an established commitment. To be reported as committed, amounts cannot be used for any other purpose unless the Commission takes the same highest level action to remove or change the constraint.

NOTE A. SUMMARY OF SIGNIFICANT ACCOUNTING POLICIES (Continued)

8. Assets, Liabilities, Deferred Outflows/Inflows of Resources, and Net Position/Fund Balance (Continued)

h. Governmental Fund Balances (Continued):

(iv.) Assigned – Assignments are neither restrictions nor commitments and represent the County's intent to use funds for a specific purpose. These assignments, however, are not legally binding and are meant to reflect intended future use of the County's ending fund balance. Intent can be expressed by the County Commissioners or by the County Auditor.

(v.) Unassigned – All amounts not included in other classifications.

i. Fund Balance Flow Assumption

Sometimes the County will fund outlays for a particular purpose from both restricted and unrestricted resources (the total of committed, assigned, and unassigned fund balance.) When fund balance resources are available for a specific purpose in more than one classification, it is the County's policy to use the most restrictive funds first in the following order: restricted, committed, assigned, and unassigned as they are needed.

j. Net Position Policies

In the government-wide statements, net position on the Statement of Net Position includes the following:

(i) Invested in Capital Assets, net of Related Debt

This is the component of net position that reports the difference between capital assets less both the accumulated depreciation and the outstanding balance of debt, excluding unexpended proceeds, that is directly attributable to the acquisition, construction, or improvement of those assets.

(ii) Restricted Assets

This is the component of net position that reports the constraints placed on the use of assets by either external parties and/or enabling legislation. Currently, the County restricts assets as follow:

a) NRS 354.598155 Special Ad Valorem Capital Projects
b) NRS 354.6113 Capital Projects Fund
c) NRS 365.190 Road Improvements
d) NRS 354.6115 Budget Stabilization
e) NRS 269 Unincorporated Towns

(iii) Unrestricted

This is the component of net position that is the difference between the assets and liabilities not reported in Invested in Capital Assets, Net of Related Debt and Restricted Assets.

k. Net Position Flow Assumption

Sometimes the County will fund outlays for a particular purpose from both restricted (e.g., restricted bond or grant proceeds) and unrestricted resources. In order to calculate the amounts to report as restricted – net position and unrestricted – net position in the government-wide and proprietary fund financial statements, a flow assumption must be made about the order in which the resources are considered to be applied. It is the County's policy to consider restricted – net position to have been depleted before unrestricted – net position is applied.

NOTE A. SUMMARY OF SIGNIFICANT ACCOUNTING POLICIES (Continued)

8. Assets, Liabilities, Deferred Outflows/Inflows of Resources, and Net Position/Fund Balance (Continued)

l. Comparative Data/Reclassifications

Comparative total data for the prior year has been presented in selected sections of the accompanying financial statements in order to provide an understanding of the changes in the County's financial position and operations. Also, certain amounts presented in the prior year data have been reclassified in order to be consistent with the current year's presentation.

m. Use of Estimates

The preparation of financial statements in conformity with generally accepted accounting principles requires management to make estimates and assumptions that affect the reported amounts of assets and liabilities and disclosures of contingent assets and liabilities at the date of the financial statements and the reported amounts of revenues and expenses during the period. Actual results could differ from those estimates.

n. Budgetary Stabilization

It is the County's policy to determine the balance or reserve as reasonable and necessary to carry out the purposes of the stabilization fund on a yearly basis. NRS 354.6115 authorizes the creation of a fund to stabilize operations of local governments and mitigate effects of natural disaster. The intent of this policy is to include a portion of the General Fund budgeted ending fund balance that will be restricted to stabilization pursuant to NRS 354.6115. Fund balance that is restricted to stabilization can be used after approval by the board of County Commissioners when total actual revenue falls short of the total anticipated revenue in the General Fund for the fiscal year in which the County uses the money.

9. Revenues and Expenditures/Expenses

a. Compensated Absences

Vested or accumulated vacation and sick leave that is expected to be liquidated with expendable available financial resources is reported as an expenditure and a fund liability of the governmental fund that will pay it. Amounts of vested or accumulated vacation leave that are not expected to be liquidated with expendable available financial resources are reported in the government-wide financial statements. No expenditure is reported for these amounts in the fund financial statements. (**See Note D6**) Vacation leave and sick leave included in accrued liabilities and recorded as expenditures in governmental fund types is the amount normally liquidated from "available spendable resources."

In proprietary funds, compensated absences are recorded when the liabilities are incurred. In governmental funds, the current portion is recorded as payroll expenditure. The estimated long-term liability for compensated absences is accounted for in the government-wide financial statements.

NOTE A. SUMMARY OF SIGNIFICANT ACCOUNTING POLICIES (Continued)

9. Revenues and Expenditures/Expenses (Continued)

b. Long-term Obligations

In the government-wide financial statements and proprietary fund types in the fund financial statements, long-term debt and other long-term obligations are reported as liabilities in the applicable governmental activities, business-type activities, or proprietary fund type Statement of Net Position. Bond premiums and discounts are deferred and amortized over the life of the bonds using the straight-line method. Bonds payable are reported net of the applicable bond premium or discount. Bond issuance costs are expensed when incurred.

In the fund financial statements, governmental fund types recognize bond premiums and discounts, as well as bond issuance costs, during the current period. The face amount of debt issued is reported as other financing sources. Premiums received on debt issuances are reported as other financing sources while discounts on debt issuances are reported as other financing uses. Issuance costs, whether or not withheld from the actual debt proceeds received, are reported as debt service expenditures.

c. Proprietary Funds Operating and Nonoperating Revenues and Expenses

Proprietary funds distinguish operating revenues and expenses from nonoperating items. Operating revenues and expenses generally result from providing services and producing and delivering goods in connection with a proprietary fund's principal ongoing operations. The principal operating revenues of the enterprise funds are charges to customers for sales and services. Operating expenses for enterprise funds include the cost of sales and services, administrative expenses, and depreciation on capital assets. All revenues and expenses not meeting this definition are reported as nonoperating revenues and expenses.

NOTE B. RECONCILIATION OF GOVERNMENT-WIDE AND FUND FINANCIAL STATEMENTS

1. Explanation of certain differences between the governmental funds Balance Sheet and the government-wide Statement of Net Position

The governmental fund balance sheet includes reconciliation between fund balances - total governmental funds and net position - governmental activities as reported in the government-wide statement of net position. One element of the reconciliation explains that "certain liabilities (such as bonds payable and capital leases payable) are not reported in the Governmental funds financial statements because they are not due and payable, but they are presented as liabilities in the statement of net position." The details of this difference are as follows:

Interest payable	$ (12,659)
Capital lease payable	(108,723)
Compensated absences	(420,161)
Net adjustment to reduce fund balance - total governmental funds to arrive at net position - governmental activities	$ (541,543)

NOTE B. RECONCILIATION OF GOVERNMENT-WIDE AND FUND FINANCIAL STATEMENTS (Continued)

2. Explanation of certain differences between the governmental funds Statement of Revenues, Expenditures, and Changes in Fund Balances and the government-wide Statement of Activities

The governmental fund Statement of Revenues, Expenditures, and Changes in Fund Balances includes a reconciliation between net changes in fund balances - total governmental funds and changes in net position of governmental activities as reported in the government-wide Statement of Activities. One element of that reconciliation explains that "Capital outlays to purchase or build capital assets are reported in Governmental Funds financial statements as expenditures. However, for governmental activities those costs are shown in the statement of net position and allocated over their estimated useful lives as annual depreciation expense in the statement of activities." The details of this difference are as follows:

Capital outlay	$ 666,737
Book value of disposed assets	(209,407)
Depreciation expense	(1,335,847)
Net adjustment to increase net changes in fund balances - total governmental funds to arrive at changes in net position of governmental activities	$ (878,517)

Another element of that reconciliation states that, "The issuance of long-term debt (i.e., bonds, leases) provides current financial resources to governmental funds, while the repayment of the principal of long-term debt consumes the current financial resources of governmental funds. Neither transaction, however, has any effect on Net Position. Also, governmental funds report the effect of issuance costs, premiums, discounts, and other similar items when debt is first issued, whereas these amounts are deferred and amortized in the statement of activities. This amount is the net effect of these differences in the treatment of long-term debt and related items." The details of this difference are as follows:

Capital lease proceeds	$ (100,300)
General obligation debt principal payments	$ 101,799
Net adjustment to increase net change in fund balances – governmental funds to arrive at change in net position of governmental activities	$ 1,499

Another element of that reconciliation states that "Generally, expenditures recognized in the fund financial statements are limited to only those that use current financial resources, but expenses are recognized in the statement of activities when incurred." The details of this difference are as follows:

Accrued interest	$ (8,858)
Compensated absences	1,907
Net adjustment to increase net change in fund balances – governmental funds to arrive at change in net position of governmental activities	$ (6,951)

NOTE C. STEWARDSHIP, COMPLIANCE, AND ACCOUNTABILITY

1. Compliance and Accountability

The County conformed to significant statutory requirements regarding financial administrations except as follows:

Per NRS 354.626, the County is required to report expenditures that exceeded budgeted appropriations at the function level for the General Fund, Special Revenue Funds, and Capital Project Funds. Enterprise funds may not exceed budget appropriations at the fund level. For the year ending June 30, 2020, the County had the following expenditures over appropriations that are required to be reported.

Alamo Town – Public works function	$	339
Airport – Public works function	$	952
Detention Center Enterprise Fund	$	39,303

The over expenditures in the funds relate to expenses that came in after year end that caused the functions to go over budget.

2. Deficit Fund Balance/Net Position

Legal Aid Services Fund	$ 3,195
Detention Center Enterprise Fund	$ 2,503,285
Building Department Enterprise Fund	$ 89,397

The deficit net position of the Detention Center and Building Department Enterprise funds are due to the individual fund's proportionate share of the net pension liability of the Public Employees' Retirement System of the State of Nevada. See **Note D-12** of the financial statement.

NOTE D. DETAILED NOTES ON ALL FUNDS

1. Pooled Cash and Investments

The County maintains a cash and investment pool that is available for use by all funds under the custody of the County Treasurer. At June 30, 2020, this pool is displayed by the statement of net position and major and other governmental funds on the governmental funds balance sheet as "Pooled Cash and Investments."

A reconciliation of cash and investments as shown in the Statement of Net Position is as follows:

Cash in the hands of officers	$ 83,750
Carrying amount of deposits	5,092,528
Fair value of investments	21,377,853
Total	$26,554,131

NOTE D. DETAILED NOTES ON ALL FUNDS (Continued)

1. Pooled Cash and Investments (Continued)

A reconciliation of cash and investments as for the County is as follows:

Government-wide pooled cash and investments	$22,332,121
Restricted cash	94,777
Total primary government	22,426,898
Investment trust fund	3,196,587
Agency fund cash	930,646
Total reporting entity	$26,554,131

Except for financial reporting purposes, the cash balances of $4,127,233 in the Fiduciary Funds are not normally considered part of the County's pooled cash and investments. These amounts represent cash held in a fiduciary capacity by the County and cannot be used in the County's normal operations.

The cash and investment pool is available for use by all funds of the County. Cash and investments under the custody of the County Treasurer are invested as a pool. The County Treasurer may invest the money of the investment pool in investments which have been authorized as investments by Nevada Revised Statutes. (**See Note A8b**)

Investment income is apportioned to the funds within the pool monthly based on the average balance invested for the month.

State statutes authorize the County to invest in obligations of the U.S. Treasury, commercial paper, corporate bonds, repurchase agreements, and the State Treasurer's Investment Pool.

Cash and investment are subject to the following risks:

Interest Rate Risk: Interest rate risk is the risk of possible reduction in the value of a security, especially a bond, resulting from the rise in interest rates. Nevada Revised Statutes limits bankers' acceptances to 180 days of maturities, repurchase agreements to 90 days, U.S. Treasuries and Agencies to less than 10 years, and commercial paper to 270 days maturity. The approximate weighted average maturity of investments in the Lincoln County Treasurer's investment pool was 2.20 years.

As of June 30, 2020, monies held in the Lincoln County Treasurer's cash and investment pool are categorized as follows:

		Investment Maturities (In Years)		
Investment Type	Fair Value	Less than 1	1-5	6-10
U.S. Treasury notes	$ 2,597,743	$ 727,525	$ 1,870,218	$ 0
U.S. Agency backed mortgages	1,062,205	0	1,062,205	0
Corporate notes	3,392,332	1,547,284	1,845,048	0
Money market funds	1,046,955	1,046,955	0	0
Negotiable certificates of deposit	13,278,618	1,738,789	11,539,829	0
Total Investments	$21,377,853	$ 5,060,553	$ 16,317,300	$ 0

Governmental Accounting Standards require fair value reporting of all investments. The fair value of the County's investments was determined by market quotes.

NOTE D. DETAILED NOTES ON ALL FUNDS (Continued)

1. Pooled Cash and Investments (Continued)

Credit Risk: Credit risk is the risk that an issuer or other counterparty to an investment will not fulfill its obligation and is a function of the credit quality ratings of its investments. The Nevada Revised Statutes limits investments instruments by their credit risk **(Note A8a)**. The State of Nevada Local Government Investment Pool is an unrated external investment pool.

As of June 30, 2020, monies held in the Lincoln County Treasurer's cash and investment pool are categorized as follows:

		Quality Ratings by Moody's			
Investment Type	Fair Value	Aaa	A2	A3	N/A
U.S. Treasury notes	$ 2,597,743	$ 2,597,743	$ 0	$ 0	$ 0
U.S. Agency backed mortgages	1,062,205	1,062,205	0	0	0
Corporate notes	3,392,332	0	2,046,134	1,346,198	0
Money market funds	1,046,955	0	0	0	1,046,955
Negotiable certificates of deposit	13,278,618	0	0	0	13,278,618
Total Investments	$21,377,853	$ 3,659,948	$2,046,134	$ 1,346,198	$14,325,573

Custodial Credit Risk: Custodial credit risk is the risk that in the event of a bank or brokerage failure, the County's deposits may not be returned. The County's bank deposits are generally covered by FDIC insurance and are collateralized by the Office of the State Treasurer/Nevada Collateral Pool. At year-end, the County's carrying amount of deposits was $5,092,528 and the bank balance was $5,226,510. Of the bank balance, $500,000 was covered by federal depository insurance. Of the remaining balance, $4,726,510 was collateralized with securities held by the Nevada Pooled Collateral Program.

Concentrations of Credit Risk: Concentration of credit risk is defined as the risk of loss attributed to the magnitude of a government's investment in a single issuer. Investments with a single issuer within the Lincoln County Treasurer Cash and investment pool that represent five percent or more of total investments as of June 30, 2020, are as follows:

U.S. Treasury Notes	12.78%

Fair Value: The County categorize its investments using fair value measurements within the fair value hierarchy established by generally accepted accounting principles. The hierarchy is based on the valuation inputs used to measure the fair value of the asset. Level 1 inputs are quoted prices in active markets for identical assets; Level 2 inputs are significant other observable inputs; Level 3 inputs are significant unobservable inputs.

The County has the following recurring fair value measurements as of June 30, 2020:

Investment Type	Fair Value	Level 1	Level 2	N/A
U.S. Treasury notes	$ 2,597,743	$ 2,597,743	$ 0	$ 0
U.S. Agency backed mortgages	1,062,205	0	1,062,205	0
Corporate notes	3,392,332	0	3,392,332	0
Money market mutual funds	1,046,955	0	0	1,046,955
Negotiable certificates of deposit	13,278,618	0	0	13,278,618
Total Investments	$21,377,853	$ 2,597,743	$ 4,454,537	$ 14,325,573

NOTE D. DETAILED NOTES ON ALL FUNDS (Continued)

1. Pooled Cash and Investments (Continued)

External Investment Pool: The County Treasurer administers an investment pool in accordance with NRS 355.168 combining the County funds with investments from Caliente City, Lincoln County School District, Range, Panaca Fire Protection District, Pahranagat Fire District, Coyote Springs GID, Pioche Fire District, Southeastern Lincoln County Habitat Conservation Plan GID, and the Lincoln County Fire District. The Board of County Commissioners has the overall responsibility of investment of funds including the external investment pool in accordance with NRS 355.175. The Lincoln County Treasurer is delegated investment responsibilities. The fair value of investments is determined monthly as statements from the various investment companies are received. Each participant's share is equal to their original investment plus or minus monthly allocations of interest income and realized and unrealized gains and losses. The County has not provided nor obtained any legally binding guarantees to support the value of the shares.

A summary of investments held in external investment pools at June 30, 2020, is as follows:

Investment Type	Fair Value	Principal Amount	Interest Rate
U.S. Treasury notes	$ 1,297,937	$ 1,275,000	Variable
U.S. Agency backed mortgages	281,911	375,000	Variable
Corporate notes	2,470,037	2,456,000	Variable
Money market funds	1,016,435	1,016,435	Variable
Negotiable certificates of deposit	10,781,975	10,393,000	Variable
Total Investments	$15,848,295	$ 15,515,435	

External Investment Pool Condensed Financial Statement
Statement of Net Position
June 30, 2020

Assets:	
Investments in securities:	
U.S. Treasury notes	$ 1,297,937
U.S. Agency backed mortgages	281,911
Corporate notes	2,470,037
Money market funds	1,016,435
Negotiable certificates of deposit	10,781,975
Total investments held in external investment pools	$ 15,848,295
Net position held in trust for pool participants	
Net position consists of	
Internal participants	$ 12,651,708
External participants	3,196,587
Total net position held in trust for pool participants (Participant's units' outstanding, $1.00/par)	$ 15,848,295

Statement of Changes in Net Position
For the Year Ended June 30, 2020

Additions:	
Investment earnings	$ 304,419
Net change in fair value of investments	421,447
Change in net position resulting from operations	725,866
Net capital share transactions	0
Change in net position	725,866
Net position, beginning of year	15,122,429
Net position, end of year	$ 15,848,295

NOTE D. DETAILED NOTES ON ALL FUNDS (Continued)

2. Receivables

Below is the detail of receivables for each major fund and the nonmajor funds, in the aggregate, including the applicable allowances for uncollectible accounts:

Receivables:	Taxes	Interest	Due from Other Governments	Due from Others	Special Assessment	Accounts Receivable	Total
General	$30,333	$ 7,729	$ 291,829	$ -	$ -	$ -	$ 329,891
Road	-	1,068	246,465	-	-	-	247,533
Water Resources	-	12,183	-	-	-	-	12,183
Land Act Use	-	5,718	-	-	-	-	5,718
County Grant	-	159	368,298	-	-	-	368,457
Other Governmental Funds	21,240	28,775	82,464	20,128	79,764	-	232,371
Detention Center	-	-	-	-	-	148,575	148,575
Solid Waste	-	133	-	-	-	131,219	131,352
Nonmajor Enterprise Funds	-	851	-	-	-	33,895	34,746
Total receivables	$51,573	$56,616	$ 989,056	$ 20,128	$ 79,764	$ 313,689	$1,510,826

3. Capital Assets

Capital assets activity for the year ended June 30, 2020, was as follows:

Governmental Activities:

	Balance June 30, 2019	Additions	Dispositions	Balance June 30, 2020
Capital assets not being depreciated:				
Land	$ 1,809,860	$ -	$ -	$ 1,809,860
Capital assets being depreciated:				
Building and improvements	23,738,032	269,597	-	24,007,629
Infrastructure	2,150,970	-	-	2,150,970
Equipment	10,193,973	397,140	(1,658,209)	8,932,904
Total capital assets being depreciated	36,082,975	666,737	(1,658,209)	35,091,503
Less accumulated depreciation for:				
Building and improvements	7,894,600	863,884	-	8,758,484
Infrastructure	373,820	43,019	-	416,839
Equipment	5,902,803	428,944	(1,448,802)	4,882,945
Total accumulated depreciation	14,171,223	1,335,847	(1,448,802)	14,058,268
Total capital assets being depreciated, net	21,911,752	(669,110)	(209,407)	21,033,235
Governmental activities assets, net	$ 23,721,612	$ (669,110)	$ (209,407)	$ 22,843,095

NOTE D. DETAILED NOTES ON ALL FUNDS (Continued)

3. Capital Assets

Business-type Activities:

	Balance June 30, 2019	Additions	Dispositions	Balance June 30, 2020
Capital assets not being depreciated:				
Land	$ 214,000	$ -	$ -	$ 214,000
Capital assets being depreciated:				
Building and improvements	1,374,844	-	-	1,374,844
Utility system	1,435,264	11,776	(63,638)	1,383,402
Equipment	1,755,899	475,933	(333,412)	1,898,420
Total capital assets being depreciated	4,566,007	487,709	(397,050)	4,656,666
Less accumulated depreciation for:				
Building and improvements	427,586	44,175	-	471,761
Utility system	699,613	28,486	(7,674)	720,425
Equipment	1,004,357	106,358	(195,581)	915,134
Total accumulated depreciation	2,131,556	179,019	(203,255)	2,107,320
Total capital assets being depreciated, net	2,434,451	308,690	(193,795)	2,549,346
Business-type activities assets, net	$ 2,648,451	$ 308,690	$ (193,795)	$ 2,763,346

Depreciation expense was charged to functions/programs of the primary government as follows:

Governmental activities:	
General government	$ 127,576
Public safety	138,849
Judicial	23,530
Public works	487,225
Health and sanitation	58,734
Welfare	20,849
Community support	19,555
Culture and recreation	459,429
	$ 1,335,847
Business activities:	
Building	$ 476
Water	22,937
Sewer	18,557
Electric	0
Solid waste	92,762
Detention center	44,287
	$ 179,019

NOTE D. DETAILED NOTES ON ALL FUNDS (Continued)

4. Accrued Liabilities

Accrued liabilities reported by governmental funds at June 30, 2020, were as follows:

Fund	Accrued Payroll and Benefits	Customer Deposits	Interest Payable
General	$ 220,587	$ -	$ -
Road	50,875	-	-
Lincoln County Land Act Special Use	186,817	-	-
County Grants	19,422	-	-
Other Governmental Funds	33,405	-	-
Detention Center	212,007	-	-
Solid Waste	17,898	-	8,174
Nonmajor Enterprise Funds	15,390	90	1,288
Total	$ 756,401	$ 90	$ 9,462

5. Restricted Assets

The balances of the County's restricted asset accounts are as follows

Cash – Pioche Public Utility –	USDA debt and replacement reserve	$ 11,490
Cash – Solid Waste	Landfill closure, and post-closure	83,287
Total restricted cash		$ 94,777

6. Long-term Debt

Governmental Type Activities:

Note Payable

a. The County borrowed money for the purchase of BLM land. The original principal of the note was $440,000. Payments are due in monthly installments of $4,383 through November 2020, with interest at 5%. The note was paid in full during the year.

NOTE D. DETAILED NOTES ON ALL FUNDS (Continued)

6. Long-term Debt

Governmental Type Activities: (Continued)

Capital Leases

a. The County entered into a lease agreement for 4 public safety vehicles totaling $133,245. The leases have been classified as capital leases according to generally accepted accounting principles. The leases contain non-funding clauses whereby the leases are terminated without penalty should the County fail in a budget year to appropriate money for the payment. The vehicles have a ten-year estimated useful life. This year, $26,649 was included in depreciation expense. This lease agreement qualifies as a capital lease for accounting purposes and, therefore, has been recorded at the present value of future minimum lease payments as of the inception date. The future minimum lease obligations and the net present value of these minimum lease payments as of June 30, 2020, were as follows:

Year Ending June 30,	Remaining Payments	Amount Representing Principal	Amount Representing Interest
2021	$ 47,180	$ 44,153	$ 3,027

b. During the year ending June 30, 2020, the County entered into a lease agreement for 3 public safety vehicles totaling $100,300. The leases have been classified as capital leases according to generally accepted accounting principles. The leases contain non-funding clauses whereby the leases are terminated without penalty should the County fail in a budget year to appropriate money for the payment. The vehicles have a ten-year estimated useful life. This year, $0 was included in depreciation expense. This lease agreement qualifies as a capital lease for accounting purposes and, therefore, has been recorded at the present value of future minimum lease payments as of the inception date. The future minimum lease obligations and the net present value of these minimum lease payments as of June 30, 2020, were as follows:

Year Ending June 30,	Remaining Payments	Amount Representing Principal	Amount Representing Interest
2021	$ 35,792	$ 31,129	$ 4,663
2022	35,792	33,441	2,351
	$ 71,584	$ 64,570	$ 7,014

NOTE D. DETAILED NOTES ON ALL FUNDS (Continued)

6. Long-term Debt (Continued)

Business-Type Activities:

Revenue Bonds The County issues revenue bonds to provide funds for the acquisition and construction of utility capital assets. Revenue bonds have been issued for the business-type activities. Revenue bonds are an obligation of the enterprise utility funds for which the capital assets were acquired or constructed. Revenue bonds outstanding at June 30, 2020, are as follows:

a. **$210,000, 2007 Pioche Town Sewer bond** is payable to the U.S. Department of Agriculture-Rural Development. The bond is payable in semi-annual payments of $5,584 including interest. The interest rate is 4.375%. The bond agreement requires the County to establish and fund monthly a debt service reserve fund equal to 10% of the semi-annual payment each month over the life of the loan until they accumulate one annual installment. This reserve fund can be used for emergency maintenance and repairs, and debt repayment should the need arise. The required reserve as of June 30, 2020, is $11,490. The balance in the reserve account was $11,490 as of June 30, 2020 **(See Note D-5)**. The outstanding balance of bonds payable at June 30, 2020, was $177,489.

Annual debt service requirements to maturity for the revenue bond are as follows:

Year Ending June 30,	Principal	Interest
2021	$ 3,440	$ 7,728
2022	3,592	7,576
2023	3,751	7,417
2024	3,915	7,253
2025	4,090	7,078
2026-2030	23,337	32,503
2031-2035	28,964	26,876
2036-2040	35,961	19,879
2041-2045	44,648	11,192
2046-2048	25,791	1,669
	$ 177,489	$ 129,171

b. **$350,000, 1980 Pioche Town Water bond** due in monthly installments of $1,729, including interest at 5%, through 2021. The Water bond is payable to the Farmers Home Administration. The bond agreement requires the County to establish and maintain reserves sufficient to insure that loan installments will be paid on time and to pay for emergency maintenance of the facilities. The bond was paid in full during the year and restricted reserves were released.

NOTE D. DETAILED NOTES ON ALL FUNDS (Continued)

6. Long-term Debt (Continued)

Changes in Long-term Debt: During the year ended June 30, 2020, the following changes occurred in long-term debt:

Governmental activities:

	Balance June 30, 2019	Net Additions	Net Deletions	Balance June 30, 2020	Due within One Year
Compensated absences	$ 422,068	$ -	$ 1,907	$ 420,161	$ 236,131
Net pension liability	7,600,013	-	235,186	7,364,827	-
OPEB obligation payable	334,948	71,150	-	406,098	-
Note payable	24,157	-	24,157	-	-
Capital lease payable	86,065	100,300	77,642	108,723	75,282
Total	$ 8,467,251	$ 171,450	$ 338,892	$ 8,299,809	$ 311,413

Business-type activities:

	Balance June 30, 2019	Net Additions	Net Deletions	Balance June 30, 2020	Due within One Year
Compensated absences	$ 227,116	$ -	$ 48,358	$ 178,758	$ 102,835
Net pension liability	3,615,370	-	263,416	3,351,954	-
OPEB obligation payable	93,697	21,209	-	114,906	-
Landfill closure and postclosure cost	60,000	20,000	-	80,000	-
Bond payable	188,119	-	10,630	177,489	3,440
Total	$ 4,184,302	$ 41,209	$ 322,404	$ 3,903,107	$ 106,275

The compensated absence liability will be liquidated primarily by the General Fund. The capital leases will be paid by the Vehicle Capital Projects Fund.

Per Nevada Revised Statute Chapter 244A.059, the debt limitation for the County is equal to 10 percent of the assessed valuation of property, excluding motor vehicles for the current year. The debt limitation currently applicable at June 30, 2020, was $29,072,613. Per Nevada Revised Statutes Chapter 269.425, the debt limitations for the unincorporated towns, which cannot exceed 25% of assessed valuation of property within the town are as follows: Alamo Town $2,566,258, Panaca Town 3,511,663, and Pioche Town $4,548,933.

NOTE D. DETAILED NOTES ON ALL FUNDS (Continued)

7. Interfund Transfers

Interfund operating transfers are made from one fund to another fund to support expenditures in accordance with the authority established for the individual funds. Transfers between fund types during the year ended June 30, 2020, were:

		Transfer Out				
	Total Transfers In	General	Road	LC Water District Water Resources	Nonmajor Special Revenue	Nonmajor Capital Projects
General Fund	$ 75,000	$ -	$ -	$ -	$ 75,000	$ -
Lincoln County Land Act Special Use	151	-	-	-	151	-
County Grant Fund	53,835	-	-	-	53,835	-
Nonmajor Special Revenue Funds	343,308	50,000	-	200,000	93,308	-
Nonmajor Capital Projects Funds	220,503	-	100,000	-	-	120,503
Major Enterprise - Detention Center	60,000	-	-	-	60,000	-
Nonmajor Enterprise Funds	50,000	-	-	-	50,000	-
Total	$ 802,797	$ 50,000	$ 100,000	$ 200,000	$ 332,294	$ 120,503

Following are explanations of certain interfund transfers of significance to the County:

The General Fund transferred money to the following funds: Property Management $40,000 and China Springs $10,000 to help cover costs.

The Road Fund transferred $100,000 to the Road Capital Projects Fund to help cover the costs of a new equipment.

The Federal in Lieu Fund transferred money to the following funds: Building Enterprise Fund $50,000, Detention Center Fund $60,000, and the Planning Fund $75,000 which is internally reported fund in the General Fund. These budgeted transfers were made to help cover operating costs. Transfers were also made for $53,835 to the County Grant Fund, $15,000 to the District Court Specialty Court Fund, and $33,308 to the Senior Nutrition Fund for grant match.

The Lincoln County Water District Fund transferred $200,000 to the Lincoln County Water Resources Fund to help cover operating costs.

The Room Tax Fund transferred $10,000 to the Fair Board Fund to help cover costs.

The Regional Transportation Commission transferred $35,000 to the Transportation Fund for a grant match and to help cover costs.

The Capital Projects Fund transferred money to the following capital projects funds: $110,000 to the Vehicle Capital Projects for assistance with capital asset purchases and debt payments; $10,503 to the Alamo, Panaca, and Pioche Town Capital Projects Funds for distribution of property taxes collected pursuant to Nevada Revised Statutes 354.59815.

The Lincoln County Land Act Grant Match Fund transferred to the Lincoln Count Land Act Special Use Fund $151

NOTE D. DETAILED NOTES ON ALL FUNDS (Continued)

8. Interfund Receivable / Payable

The Solid Waste Enterprise Fund borrowed monies from two special revenue funds which is being repaid over 10 years. The funds which will receive those payments are as follows:

	Due to		Due from
Lincoln County Land Act Special Use	$ 600,921	Solid Waste Enterprise	$ 770,921
Lincoln County Water Special Use	170,000		
	$ 770,921		

The County purchased the local landfill and created the Solid Waste Enterprise Fund in 2017. To help cover initial costs and have cash available, the Solid Waste Enterprise Fund borrowed monies from two special revenue funds which is being repaid over 10 years at 0% interest.

Annual debt service requirements to maturity for the payable are as follows:

Year Ending June 30,	Principal
2021	$ 40,000
2022	40,000
2023	40,000
2024	40,000
2025	40,000
2026-2027	140,000
	$ 340,000

The County purchased a roll off truck in 2020 for $179,738. To help cover costs and have cash available, the Solid Waste Enterprise Fund borrowed monies from the Lincoln County Land Act Special Use special revenue fund which is being repaid over 10 years at 4% interest.

Annual debt service requirements to maturity for the payable are as follows:

Year Ending June 30,	Remaining Payments	Amount Representing Principal	Amount Representing Interest
2021	$ 22,809	$ 16,244	$ 6,565
2022	22,809	16,894	5,915
2023	22,809	17,570	5,239
2024	22,809	18,272	4,537
2025	22,809	19,003	3,806
2026-2029	83,447	76,136	7,311
	$ 197,492	$ 164,119	$ 33,373

NOTE D. DETAILED NOTES ON ALL FUNDS (Continued)

8. Interfund Receivable / Payable (Continued)

The County purchased a front load truck in 2020 for $266,802. To help cover costs and have cash available, the Solid Waste Enterprise Fund borrowed monies from the Lincoln County Land Act Special Use special revenue fund which is being repaid over 10 years at 2% interest.

Annual debt service requirements to maturity for the payable are as follows:

Year Ending June 30,	Remaining Payments	Amount Representing Principal	Amount Representing Interest
2021	$ 32,894	$ 27,558	$ 5,336
2022	32,894	23,324	9,570
2023	32,894	24,257	8,637
2024	32,894	25,228	7,666
2025	32,894	26,237	6,657
2026-2030	156,878	140,198	16,680
	$ 321,348	$ 266,802	$ 54,546

9. Unearned Revenue

Governmental funds report unearned revenue in connection with the resources that have been received but not yet earned. At June 30, 2020, the County had the following unearned revenues:

Qualifying expenditures for expenditure-driven grants have not occurred before June 30, 2020.

County Grant	Other Governmental	Total
$ 120,912	$ 95,830	$ 216,742

10. Unavailable Revenue

Delinquent taxes receivable not collected within sixty days after year-end are recorded as deferred inflows of resources as they are not available to pay liabilities of the current period. At June 30, 2020, the County had the following unavailable revenues:

General	Other Governmental	Total
$ 26,513	$ 12,022	$ 38,535

Grants receivable not collected within sixty days after year-end are recorded as deferred inflows of resources as they are not available to pay liabilities of the current period. The following grants receivable have been deferred:

County Grant
$ 121,506

NOTE D. DETAILED NOTES ON ALL FUNDS (Continued)

11. Risk Management

Property, Casualty, Crime, and Machinery Insurance

The County is exposed to various risks of loss related to torts; theft of, damage to, and destruction of assets; errors and omissions; injuries to employees; and natural disasters. The County joined together with other local governments throughout the State of Nevada to create a pool under the Nevada Interlocal Cooperation Act. The Nevada Public Agency Insurance Pool (NPAIP) is a public entity risk pool currently operating as a common risk management and insurance program for members. The County pays an annual premium and specific deductibles, as necessary, to NPAIP for its general insurance coverage. NPAIP is considered a self-sustaining risk pool that will provide liability coverage for its members up to $10,000,000 per event and a $10,000,000 annual aggregate per member. Property, crime, and equipment breakdown coverage is provided to its members up to $300,000,000 per loss with various sub-limits established for earthquake, flood, equipment breakdown, and money and securities. Cyber security events including privacy response expense are covered at $3,000,000 per event with an annual aggregate of $3,000,000. As a participatory member, the maintenance deductible is $2,000 for each insured event.

The County is self-insured for unemployment claims. Payments are made from the general fund to cover claims.

The County participates in the Public Agency Compensation Trust (PACT). Premiums paid to PACT cover workers' compensation claims against the County. Premiums are based on a percentage of wages paid.

The County carries commercial insurance for all other risks of loss including employee health and accident insurance. Settled claims resulting from these risks have not exceeded commercial insurance coverage in any of the past three fiscal years.

12. Contingent Liabilities

Grants
Amounts received or receivable from grantor agencies are subject to audit and adjustment by those agencies, principally the Federal Government. Any disallowed claims, including amounts already collected, may constitute a liability of the applicable funds. The amount, if any, of expenditures which may be disallowed by the grantor cannot be determined at this time although the County expects such amounts, if any, to be immaterial.

Litigation
The County is a defendant in various lawsuits. Although the outcome of these lawsuits is not presently determinable, it is the opinion of the County's counsel that resolution of these matters will not have a material adverse effect on the financial condition of the County.

Landfill Closure and Post-Closure Costs
State and federal laws and regulations require the County to place a final cover on its landfill sites when it stops accepting waste and to perform certain maintenance and monitoring functions at the sites for thirty years after closure. The closure and post-closure care costs will be paid only near or after the date that the landfills stop accepting waste.

As of June 30, 2020, the estimated liability to date for closure and post-closure costs is $80,000. This represents the cumulative amount reported to date based on percent use of the estimated liability of $1,700,000 as the remaining capacity is used. Actual costs may be higher due to inflation, changes in technology, or changes in regulations. The County operates one landfill with an estimated remaining life of 38 years. As of June 30, 2020, $83,287, has been restricted for future closure, post-closure, and opening landfill costs in the Solid Waste Fund. The County is presently using the "Local Government Test" as financial assurance mechanism for its closure and post-closure costs.

NOTE D. DETAILED NOTES ON ALL FUNDS (Continued)

12. Contingent Liabilities

Coronavirus (COVID-19)

On March 11, 2020, the World Health Organization declared the outbreak of the coronavirus (COVID-19) a pandemic. The President of the United States declared the outbreak of coronavirus a national emergency on March 13, 2020. The related health crisis has adversely affected the global economy, including disruptions to domestic and international travel and the hospitality industry in the State of Nevada.

In response to the Coronavirus pandemic, the Governor of Nevada issued several declarations of emergency to mitigate the health impact of the pandemic. Directives included the closure of gaming establishments, non-essential businesses and onsite dining at restaurants and food establishments.

The outbreak of the Coronavirus and the dramatic steps taken by the Federal government and the State to Nevada to address it will continue to impact national and local economies. The full impact on the State of Nevada and the District's financial condition is not expected to be known for some time. The impact on the District's future operations as a result of the Coronavirus is difficult to predict due to uncertainties relating to it duration and severity, as well as additional actions that may be taken by governmental and other health care authorities to contain or mitigate the effects of the virus. The possible reemergence of the virus later in the year could have an adverse financial effect on the District. The District is continuously monitoring the situation and will take such proactive measures as may be required to maintain operations and meet its obligations. Given the level of uncertainty, management cannot reasonably estimate the actual impact on the District's future financial position at this time.

13. Defined Benefit Pension Plan

Plan Description. All half time and greater County employees are provided pension benefits through the Public Employees' Retirement System of the State of Nevada (PERS), a cost sharing multiple-employer, defined benefit plan administered by the Public Employees' Retirement System of the State of Nevada. PERS provides retirement benefits, disability benefits, and death benefits, including annual cost of living adjustments, to plan members and their beneficiaries. NRS Chapter 286 establishes the benefit provisions provided to the participants of PERS. These benefit provisions may only be amended through legislation. The Public Employees' Retirement System of the State of Nevada issues a publicly available financial report that includes financial statements and required supplementary information for PERS that can be obtained at www.nvpers.org under Quick Links — Publications.

Benefits Provided. Benefits, as required by the Nevada Revised Statutes (NRS or statute), are determined by the number of years of accredited service at time of retirement and the member's highest average compensation in any 36 consecutive months. Vested members are entitled to a life-time monthly retirement benefit equal to the service time multiplier (STM) percentages listed below times the member's years of service to a maximum of 30 years. The schedule of Eligibility for Monthly Unreduced Retirement Benefits for regular members and police/fire members are as follows:

Eligibility for Regular Members:

Years of Service	Hired prior to 07/01/01		Hired between 07/01/01-12/31/09		Hired Between 01/01/10-07/01/15		Hired After 7/1/15	
	Age	STM%	Age	STM%	Age	STM%	Age	STM%
5 years	65	2.50%	65	2.67%	65	2.50%	65	2.25%
10 years	60	2.50%	60	2.67%	62	2.50%	62	2.25%
30 years	Any	2.50%	Any	2.67%	Any	2.50%	55	2.25%
33 1/3 years							Any	2.25%

NOTE D. DETAILED NOTES ON ALL FUNDS (Continued)

13. Defined Benefit Pension Plan (Continued)

Eligibility for Police and Fire Members:

Years of Service	Hired prior to 07/01/01		Hired between 07/01/01-12/31/09		Hired Between 01/01/10-07/01/15		Hired After 7/1/15	
	Age	STM%	Age	STM%	Age	STM%	Age	STM%
5 years	65	2.50%	65	2.67%	65	2.50%	65	2.50%
10 years	55	2.50%	55	2.67%	60	2.50%	60	2.50%
20 years	50	2.50%	50	2.67%	50	2.50%	50	2.50%
25 years	Any	2.50%	Any	2.67%				
30 years					Any	2.50%	Any	2.50%

* Only service performed in a position as a police officer or firefighter may be counted towards eligibility for retirement as Police/Fire accredited service.

Benefit payments to which participants or their beneficiaries may be entitled under the plan include pension benefits, disability benefits, and survivor benefits. The System offers several alternatives to the unmodified service retirement allowance which, in general, allow the retired employee to accept a reduced service retirement allowance payable monthly during his or her lifetime and various optional monthly payments to a named beneficiary after his or her death. Post-retirement increases are provided by authority of NRS 286.575 - .579.

The normal ceiling limitation on monthly benefits allowances is 75% of average compensation. However, a member who has an effective date of membership before July 1, 1985, is entitled to a benefit of up to 90% of average compensation. Both Regular and Police/Fire members become fully vested as to benefits upon completion of five years of service.

Contributions: Benefits for plan members are funded under the employer pay contribution plan. The County is required to contribute all amounts due under the plan. PERS receives an actuarial valuation on an annual basis indicating the contribution rates required to fund the System on an actuarial reserve basis. Contributions actually made are in accordance with the required rates established by the Nevada Legislature. These statutory rates are increased/decreased pursuant to NRS 286.421 and 286.450. The County's required contribution rates for the year ending June 30, 2020, were 42.50% for police and fire; 29.25% for regular employees; 45.50% for Justice of the Peace; and 15.25% employee/employer match. The County has fully funded the amounts due for the year ending June 30, 2020. For purposes of GASB No. 82, the County recognized only the employer portion as a deferred outflow.

The actuary funding method used is the Entry Age Normal Cost Method. It is intended to meet the funding objective and result in a relatively level long-term contribution requirement as a percentage of salary.

Pension Liabilities, Pension Expense, and Deferred Outflows of Resources and Deferred Inflows of Resources Related to Pensions

At June 30, 2020, the County reported a liability of $10,716,781 for its proportionate share of the net pension liability. The net pension liability was measured as of June 30, 2019, and the total pension liability used to calculate the net pension liability was determined by an actuarial valuation as of that date. The County's allocation percentage of the net pension liability was based on the total contributions due on wages paid during the measurement period. Each employer's proportion of the net pension liability is based on their combined employer and member contributions relative to the total combined employer and member contributions for all employers for the period ended June 30, 2019. The County's proportionate share of the net pension liability decreased from 0.08224 percent at June 30, 2018 to 0.07859 at June 30, 2019.

NOTE D. DETAILED NOTES ON ALL FUNDS (Continued)

13. Defined Benefit Pension Plan (Continued)

For the year ended June 30, 2020, the County recognized pension expense of $199,500. At June 30, 2020, the County reported deferred outflows of resources and deferred inflows of resources related to pensions from the following sources:

	Deferred Outflows of Resources	Deferred Inflows of Resources
Differences between expected and actual results	$ 401,867	$ 309,112
Net difference between projected and actual earnings on pension plan investments	0	533,121
Changes in assumption	436,129	0
Changes in proportion	110,396	871,938
County Contributions subsequent to measurement date	651,922	0
Total	$ 1,600,314	$ 1,714,171

$651,922 was reported as deferred outflows of resources related to pensions resulting from County contributions subsequent to the measurement date will be recognized as a reduction of the net pension liability in the year ended June 30, 2020. Other amounts reported as deferred outflows of resources and deferred inflows of resources related to pensions will be recognized in pension expense as follows:

Year ended June 30:	
2021	$(109,544)
2022	(402,402)
2023	(124,139)
2024	(66,206)
2025	(52,917)
2026	(10,571)
	$(765,779)

Actuarial Assumptions: The System's net pension liability was measured as of June 30, 2019, and the total pension liability used to calculate the net pension liability was determined by an actuarial valuation as of that date. The total pension liability was determined using the following actuarial assumptions, applied to all periods included in the measurement:

Inflation rate	2.75%
Payroll Growth	Regular: 5.50%
	Police/Fire: 6.50%
Investment Rate of Return	7.50%, including inflation
Productivity pay increase	0.50%
Projected Salary increases	Regular: 4.25% to 9.15%, depending on service
	Police/Fire: 4.55% to 13.90%, depending on service
	Rates include inflation and productivity increases
Other assumptions	Same as those used in the June 30, 2019 funding actuarial valuation

NOTE D. DETAILED NOTES ON ALL FUNDS (Continued)

13. Defined Benefit Pension Plan (Continued)

Mortality rates were based on the following:

Healthy:	Headcount-Weighted RP-2014 Annuitant Table projected to 2020 with Scale MP-2016, set forward one year for spouses and beneficiaries.
Disabled:	Headcount-Weighted RP-2014 Disabled Retiree Table, set forward four years.
Pre-Retirement	Headcount-Weighted RP-2014 Employee Table, projected to 2020 with Scale MP-2016

Actuarial assumptions used in the June 30, 2019 valuation were based on the results of the experience study for the period of July 1, 2012 through June 30, 2016. The System's policies which determine the investment portfolio target asset allocation are established by the Public Employees' Retirement Board. The asset allocation is reviewed annually and is designed to meet the future risk and return needs of the System.

The following was the Board adopted policy target asset allocation as of June 30, 2019:

Asset Class	Target Allocation	Long-Term Geometric Expected Real Rate of Return*
U.S. Stock	42%	5.50%
International Stock	18%	5.50%
U.S. Bonds	28%	0.75%
Private Markets	12%	6.65%

*As of June 30, 2019, PERS' long-term inflation assumption was 2.75%

Discount Rate: The discount rate used to measure the total pension liability was 7.50% as of June 30, 2019. The projection of cash flows used to determine the discount rate assumed that employee and employer contributions will be made at the rate specified in statute. Based on that assumption, the pension plan's fiduciary net position at June 30, 2019, was projected to be available to make all projected future benefit payments of current active and inactive employees. Therefore, the long-term expected rate of return on pension plan investments was applied to all periods of projected benefit payments to determine the total pension liability as of June 30, 2019.

Sensitivity of the County's proportionate share of the net pension liability to change in the discount rate: The following presents the County's proportionate share of the net pension liability calculated using the discount rate of 7.50 percent, as well as what the County's proportionate share of the net pension liability would be if it were calculated using a discount rate that is 1 percent higher or lower than the current rate.

	1.0% Decrease (6.5%)	Discount Rate (7.5%)	1.0% Increase (8.5%)
County's proportionate share of the net pension liability	$ 16,593,209	$ 10,716,781	$ 5,831,470

NOTE D. DETAILED NOTES ON ALL FUNDS (Continued)

13. Defined Benefit Pension Plan (Continued)

Pension Plan Fiduciary Net Position: Detailed information about the pension plan's fiduciary net position is available in the PERS Comprehensive Annual Financial Report, available on the PERS website.

Pension contributions payable: At June 30, 2020, the County reported payables to the defined benefit pension plan of $62,341 for legally required employer contributions which had not yet been remitted to PERS.

14. Post-Employment Healthcare Plan

Plan Description: The County subsidizes eligible retirees' contributions to the Public Employees' Benefits Plan (PEBP), an agent multiple-employer defined benefit postemployment health care plan administered by the State of Nevada. The plan provides medical, vision, dental and life insurance benefits to eligible retired County employees and beneficiaries. NRS 287.041 assigns the authority to establish and amend benefit provisions to the PEBP nine-member board of trustees. The plan is now closed to current County retirees. However, County employees who previously met the eligibility requirement for retirement within the Nevada Public Employees' Retirement System had the option upon retirement to enroll in coverage under the PEBP and the subsidy provided by the County was determined by their number of years of service. The PEBP issues a publicly available financial report that includes financial statements and required supplementary information. That report may be obtained by writing to Public Employee's Benefits Program, 901 S. Stewart Street, Suite 1001, Carson City, NV 89701, by calling (775) 684-7000, or by accessing the website at https://pebp.state.nv.us under Resources – Fiscal & Utilization Reports.

Employees covered by benefit terms. At June 30, 2020, the following employees were covered by the benefit terms:

Inactive employees or beneficiaries currently receiving benefit payments	22
Inactive employees entitled to but not yet receiving benefit payments	0
Active employees	0
	22

Funding Policy NRS 287.046 establishes the subsidies to be contributed toward the premium costs of the eligible retired County employees. As noted above, the County policy is to only fund retirees who retired prior to July 1, 2009. Plan members receiving benefits have their monthly contributions deducted from their pension checks based on the health plan chosen by the retiree as reduced by the amount of the subsidy. Effective July 2015, the subsidy provided to pre-Medicare retirees varies based on the type of plan selected (PPO or HMO) and by the level of coverage taken (e.g., single, two party, family, etc.). The chart below shows our understanding of monthly amounts currently payable for those with 15 years of PERS service.

Coverage Level	PPO CDHP		Statewide EPO/HMO	
	Base Subsidy	SB 552 Subsidy	Base Subsidy	SB 552 Subsidy
	15 Years of Service			
Retiree Only	$ 813.80	$163.65	$ 398.00	$ (11.66)
Retiree + Spouse	1,389.86	419.51	630.93	(28.22)
Retiree + Child(ren)	1,212.52	384.79	527.69	(5.39)
Retiree + Family	1,788.58	640.65	760.62	(21.95)

All Medicare eligible retirees participate in a Medicare Exchange with PEBP providing a service related contribution to a Health Reimbursement Arrangement (HRA) equal to $13 per month per year of service (maximum $260 per month). The contribution requirements of plan members and the County are established and amended by the PEBP board of trustees. As a participating employer, the County is billed for the subsidy on a monthly basis and is legally required under NRS 287.023 to provide for it.

NOTE D. DETAILED NOTES ON ALL FUNDS (Continued)

14. Post-Employment Healthcare Plan (Continued)

For fiscal year 2020, the County contributed $28,869 to the plan for current premiums. The County did not prefund any future benefits.

Important Dates used in the Valuation:

Valuation Date:	June 30, 2019
Measurement Date:	June 30, 2019
Measurement Period:	June 30, 2018 to June 30, 2019
Fiscal Year End:	June 30, 2020

Significant Results and Differences from the Prior Valuation:

There were no changes in benefit terms from the prior valuation. Updates were made to the discount rate, to the mortality assumptions, and to assumed future healthcare trends. Differences between projected and actual results were recognized as plan experience.

Total Other Post-Employment Benefits (OPEB) Liability

The County's OPEB liability of $521,004 was measured as of June 30, 2019 and determined by actuarial valuation as of that date.

Actuarial Assumptions and Other Inputs: The total OPEB liability in the June 30, 2019, actuarial valuation was determined using the following actuarial assumptions and other inputs, applied to all periods included in the measurement:

	PEBP
Inflation rate	2.50%
Salary Increase	Not applicable; there are no active employees in this plan.
Discount Rate	2.79%
Healthcare Cost Trend Rates	Pre-Medicare: 5.40% fluctuating down to 4.50% by 2076. Post-Medicare: 4.50% for all years.
Retirees' share of benefit-related costs	0%

The discount rate was based on the S & P General Obligation Municipal Bond 20 year High Grade Index.

Mortality rates were based on the NVPERS 2019 experience study with improvements using the Macleod Watts Scale for 2020.

Actuarial assumptions used in the June 30, 2020, valuation were based on the results of an actuarial experience study for the period of June 30, 2019, to June 30, 2020.

NOTE D. DETAILED NOTES ON ALL FUNDS (Continued)

14. Post-Employment Healthcare Plan (Continued)

Changes in the Total OPEB Liability

	PEBP
Service cost	$ 0
Interest	12,160
Changes of benefit terms	0
Differences between expected and actual experience	117,649
Changes in assumptions or other inputs	3,745
Benefit payments	(41,195)
Net changes	92,359
Net OPEB obligation - beginning of the year	428,645
Net OPEB obligation - end of year	$ 521,004

Changes of assumptions and other inputs reflect a change in the discount rate from 2.98% as of June 30, 2019, to 2.79% as of June 30, 2020.

Sensitivity of the County's total OPEB liability to changes in the discount rate. The following presents the total OPEB liability of the County, as well as what the County's total OPEB liability would be if it were calculated using a discount rate that is 1 percent higher or lower than the current rate.

	1.0% Decrease (1.79%)	Discount Rate (2.79%)	1.0% Increase (3.79%)
PEBP	$ 588,220	$ 521,004	$ 465,239

Sensitivity of the County's total OPEB liability to changes in the healthcare cost trend rates. The following presents the total OPEB liability of the County, as well as what the County's total OPEB liability would be if it were calculated using healthcare cost trend rates that are 1 percent higher or lower than the current healthcare cost trend rates:

	1.0% Decrease	Discount Rate	1.0% Increase
PEBP	$ 467,646	$ 521,004	$ 583,773

OPEB Expense, Deferred Outflows of Resources, and Deferred Inflows of Resources Related to OPEB

For the year ended June 30, 2020, the County recognized OPEB expense of $104,686. At June 30, 2020, the County reported deferred inflows and outflows of resources related to pensions from the following sources:

	Deferred Outflows of Resources	Deferred Inflows of Resources
Differences between expected and actual results	$ 0	$ 0
Changes of assumptions or other inputs	0	0
County Contributions subsequent to measurement date	28,869	0
Total	$ 28,869	$ 0

NOTE D. DETAILED NOTES ON ALL FUNDS (Continued)

14. Post-Employment Healthcare Plan (Continued)

OPEB Expense, Deferred Outflows of Resources, and Deferred Inflows of Resources Related to OPEB

$28,869 reported as deferred outflows of resources related to OPEB resulting from County contributions subsequent to the measurement date will be recognized as a reduction of the total OPEB liability in the year ended June 30, 2021. There were no other amounts reported as deferred outflows of resources and deferred inflows of resources related to OPEB to be recognized as OPEB expense.

15. Water Delivery Teaming Agreement

The Water District has entered into a water teaming agreement. The purpose of the agreement is to develop a water infrastructure and provide wholesale water to adjoining water districts and/or developers who require water. Investment to develop the water sources are funded by the partner. The Water District is not required to provide funding. Should projects fail, the Water District has no liability for costs incurred by the partner. If the projects are completed and revenues are generated from the sale of water, revenues collected will be applied to the investment of the partner until paid in full for the successful projects. After payment of project expenditures, the Water District will be entitled to 50 percent of remaining monies. Should the Water District withdraw from the agreement, the Water District will be required to reimburse the partner's investment costs. Revenues, if any, from water sales are recorded in the Lincoln County Water District funds.

16. Disposal of Operations – Tri-County Weed Control

On October 1, 2019, the County transferred the assets and liabilities comprising the Tri-County Weed Control operations to White Pine County, Nevada. As a result of the transfer, the County recognized a loss of $516,980 on the disposal of its operations as a special item, which included $313,853 in cash and $203,127 of capital assets. This activity was recorded in the Tri-County Weed Control Special Revenue Fund. During the current year revenues totaled $328,494 and the general government expenditures totaled $186,640.

17. Disposal of Operations – Pioche Public Utility Electric Operations

On October 7, 2019, the County approved the Pioche Town Board's recommendation that it is in the best interest of the residents of the Town of Pioche that the ownership and management of the electrical utility for the Town of Pioche be transferred to the Lincoln County Power District on or before December 1, 2019. As a result of the transfer, the County recognized a loss of $223,875 on the disposal of its operations as a special item, which included a loss of $349,430 of cash and capital assets, a gain of $125,407 on net pension liability, and a gain of $148 on OPEB liability. This activity was recorded in the Pioche Public Utility Electric Enterprise Fund. During the current year operating revenues totaled $260,233, operating expenses totaled $307,103, and non-operating revenues and expenses totaled $27,187.

REQUIRED SUPPLEMENTARY INFORMATION

LINCOLN COUNTY, NEVADA
REQUIRED SUPPLEMENTARY INFORMATION
MAJOR FUND - GENERAL FUND
SCHEDULE OF REVENUES, EXPENDITURES AND CHANGES IN FUND BALANCE
BUDGET (BUDGETARY BASIS) AND ACTUAL
Year Ended June 30, 2020

	Original Budget	Final Budget	Actual	Variance With Final Budget Positive (Negative)
Revenues:				
Taxes:				
Property taxes	$ 2,324,465	$ 2,324,465	$ 2,268,713	$ (55,752)
Licenses and permits:				
Business licenses	7,200	7,200	10,685	3,485
Liquor licenses	5,100	5,100	6,070	970
Gaming licenses	5,200	5,200	4,005	(1,195)
Marriage licenses	650	650	336	(314)
Total licenses and permits	18,150	18,150	21,096	2,946
Intergovernmental:				
Gaming tax	141,000	141,000	127,467	(13,533)
Private car line tax	4,100	4,100	-	(4,100)
Virgin Valley Water District	7,000	7,000	10,856	3,856
Consolidated tax	1,388,703	1,388,703	1,420,022	31,319
Grants	56,262	56,262	21,610	(34,652)
Lincoln County Water District contract	18,000	18,000	18,000	-
Coyote Springs GID dissolution	-	-	916,307	916,307
Marijuana fees	88,235	88,235	88,270	35
Fish and wildlife	-	-	2,559	2,559
Total intergovernmental	1,703,300	1,703,300	2,605,091	901,791
Charges for services:				
Clerk fees	14,000	14,000	9,543	(4,457)
Recorder fees	50,000	50,000	51,923	1,923
Assessor commissions	65,500	65,500	40,986	(24,514)
Sheriff fees	2,500	2,500	9,830	7,330
Tax penalties and costs	45,000	45,000	50,574	5,574
District attorney fees	500	500	1	(499)
Civil fees	-	-	3,217	3,217
Security contract	122,000	122,000	122,000	-
Caliente police contract	75,000	75,000	64,800	(10,200)
Caliente court contract	7,000	7,000	3,500	(3,500)
Spay & neuter license plate fees	1,000	1,000	-	(1,000)
Total charges for services	382,500	382,500	356,374	(26,126)
Fines and forfeitures:				
Fines and forfeitures	360,000	360,000	254,615	(105,385)
Miscellaneous:				
Investment income	10,000	10,000	222,243	212,243
Rent, sales, refunds	40,000	40,000	32,742	(7,258)
Excess proceeds	-	-	24,697	24,697
Other	5,000	5,000	10,861	5,861
Total miscellaneous	55,000	55,000	290,543	235,543
Total revenues	$ 4,843,415	$ 4,843,415	$ 5,796,432	$ 953,017

See accompanying notes to required supplementary information.

LINCOLN COUNTY, NEVADA
REQUIRED SUPPLEMENTARY INFORMATION
MAJOR FUND - GENERAL FUND
SCHEDULE OF REVENUES, EXPENDITURES AND CHANGES IN FUND BALANCE
BUDGET (BUDGETARY BASIS) AND ACTUAL (CONTINUED)
Year Ended June 30, 2020

	Original Budget	Final Budget	Actual	Variance With Final Budget Positive (Negative)
General government:				
Administration:				
County commissioners:				
Salaries and wages	$ 109,887	$ 109,887	$ 106,505	$ 3,382
Employee benefits	74,253	74,253	68,948	5,305
Services and supplies	37,500	37,500	24,430	13,070
Total county commissioners	221,640	221,640	199,883	21,757
Executive officer:				
Salaries and wages	26,603	26,603	39,066	(12,463)
Employee benefits	17,315	17,315	23,846	(6,531)
Services and supplies	5,150	5,150	3,394	1,756
Total executive officer	49,068	49,068	66,306	(17,238)
Clerk:				
Salaries and wages	125,667	125,667	108,256	17,411
Employee benefits	54,668	54,668	48,888	5,780
Services and supplies	36,700	36,700	10,912	25,788
Total clerk	217,035	217,035	168,056	48,979
Treasurer:				
Salaries and wages	120,043	120,043	118,043	2,000
Employee benefits	53,684	53,684	53,118	566
Services and supplies	17,600	17,600	11,669	5,931
Total treasurer	191,327	191,327	182,830	8,497
Auditor and recorder:				
Salaries and wages	133,915	133,915	134,367	(452)
Employee benefits	57,180	57,180	65,811	(8,631)
Services and supplies	20,300	20,300	12,530	7,770
Total auditor and recorder	211,395	211,395	212,708	(1,313)
Assessor:				
Salaries and wages	152,146	152,146	159,493	(7,347)
Employee benefits	76,576	76,576	69,694	6,882
Services and supplies	23,700	23,700	11,776	11,924
Total assessor	252,422	252,422	240,963	11,459
Grant administrator:				
Salaries and wages	59,779	59,779	19,737	40,042
Employee benefits	21,608	21,608	7,486	14,122
Services and supplies	7,000	7,000	1,701	5,299
Total grant administrator	88,387	88,387	28,924	59,463

See accompanying notes to required supplementary information.

LINCOLN COUNTY, NEVADA
REQUIRED SUPPLEMENTARY INFORMATION
MAJOR FUND - GENERAL FUND
SCHEDULE OF REVENUES, EXPENDITURES AND CHANGES IN FUND BALANCE
BUDGET (BUDGETARY BASIS) AND ACTUAL (CONTINUED)
Year Ended June 30, 2020

	Original Budget	Final Budget	Actual	Variance With Final Budget Positive (Negative)
General government (Continued):				
Business license:				
Salaries and wages	$ 12,385	$ 12,385	$ 7,808	$ 4,577
Employee benefits	6,563	6,563	2,055	4,508
Services and supplies	1,500	1,500	682	818
Total business license	20,448	20,448	10,545	9,903
Buildings and grounds:				
Pioche:				
Salaries and wages	34,292	34,292	39,421	(5,129)
Employee benefits	10,173	10,173	3,553	6,620
Services and supplies	133,825	133,825	101,469	32,356
Total Pioche	178,290	178,290	144,443	33,847
Alamo:				
Salaries and wages	8,208	8,208	8,785	(577)
Employee benefits	857	857	13,435	(12,578)
Services and supplies	22,000	22,000	10,026	11,974
Total Alamo	31,065	31,065	32,246	(1,181)
Total buildings and grounds	209,355	209,355	176,689	32,666
Other general expenses:				
Employee benefits	42,000	42,000	28,141	13,859
Services and supplies	199,756	199,756	151,763	47,993
Total other general expenses	241,756	241,756	179,904	61,852
Total general government	1,702,833	1,702,833	1,466,808	236,025

See accompanying notes to required supplementary information.

LINCOLN COUNTY, NEVADA
REQUIRED SUPPLEMENTARY INFORMATION
MAJOR FUND - GENERAL FUND
SCHEDULE OF REVENUES, EXPENDITURES AND CHANGES IN FUND BALANCE
BUDGET (BUDGETARY BASIS) AND ACTUAL (CONTINUED)
Year Ended June 30, 2020

	Original Budget	Final Budget	Actual	Variance With Final Budget Positive (Negative)
Public safety:				
Sheriff:				
Salaries and wages	$ 873,501	$ 873,501	$ 829,904	$ 43,597
Employee benefits	535,433	535,433	521,446	13,987
Services and supplies	210,681	210,681	200,116	10,565
Total sheriff	1,619,615	1,619,615	1,551,466	68,149
Emergency management:				
Salaries and wages	28,486	28,486	25,075	3,411
Employee benefits	12,555	12,555	10,562	1,993
Services and supplies	5,500	5,500	3,242	2,258
Total emergency management	46,541	46,541	38,879	7,662
Caliente contract:				
Salaries and wages	90,301	90,301	87,416	2,885
Employee benefits	52,330	52,330	53,092	(762)
Services and supplies	4,600	4,600	875	3,725
Total Caliente contract	147,231	147,231	141,383	5,848
Total public safety	1,813,387	1,813,387	1,731,728	81,659
Judicial:				
District court:				
Salaries and wages	118,245	118,245	128,945	(10,700)
Services and supplies	258,700	258,700	181,829	76,871
Total district court	376,945	376,945	310,774	66,171
District attorney:				
Salaries and wages	224,974	224,974	232,201	(7,227)
Employee benefits	98,072	98,072	88,405	9,667
Services and supplies	28,000	28,000	14,777	13,223
Total district attorney	351,046	351,046	335,383	15,663

See accompanying notes to required supplementary information.

LINCOLN COUNTY, NEVADA
REQUIRED SUPPLEMENTARY INFORMATION
MAJOR FUND - GENERAL FUND
SCHEDULE OF REVENUES, EXPENDITURES AND CHANGES IN FUND BALANCE
BUDGET (BUDGETARY BASIS) AND ACTUAL (CONTINUED)
Year Ended June 30, 2020

	Original Budget	Final Budget	Actual	Variance With Final Budget Positive (Negative)
Judicial (Continued):				
Law library	$ 8,000	$ 8,000	$ 6,762	$ 1,238
Public guardian	2,000	2,000	-	2,000
Public administrator	2,000	2,000	551	1,449
Justice court:				
Juvenile officers:				
Salaries and wages	62,317	62,317	-	62,317
Employee benefits	35,796	35,796	-	35,796
Services and supplies	20,000	20,000	42,221	(22,221)
Total juvenile officers	118,113	118,113	42,221	75,892
Alamo:				
Salaries and wages	129,504	129,504	130,986	(1,482)
Employee benefits	66,344	66,344	61,747	4,597
Services and supplies	17,250	17,250	17,210	40
Total Alamo	213,098	213,098	209,943	3,155
Meadow Valley:				
Salaries and wages	114,604	114,604	116,076	(1,472)
Employee benefits	62,420	62,420	63,937	(1,517)
Services and supplies	24,900	24,900	12,631	12,269
Total Meadow Valley	201,924	201,924	192,644	9,280
Total judicial	1,273,126	1,273,126	1,098,278	174,848
Health:				
Public Nurse:				
Salaries and wages	14,196	14,196	14,483	(287)
Employee benefits	1,482	1,482	1,527	(45)
Services and supplies	45,786	45,786	45,866	(80)
Total Meadow Valley	61,464	61,464	61,876	(412)
Animal Control:				
Services and supplies	1,000	1,000	-	1,000
Total health	62,464	62,464	61,876	588
Total expenditures	$ 4,851,810	$ 4,851,810	$ 4,358,690	$ 493,120

See accompanying notes to required supplementary information.

LINCOLN COUNTY, NEVADA
REQUIRED SUPPLEMENTARY INFORMATION
MAJOR FUND - GENERAL FUND
SCHEDULE OF REVENUES, EXPENDITURES AND CHANGES IN FUND BALANCE
BUDGET (BUDGETARY BASIS) AND ACTUAL (CONTINUED)
Year Ended June 30, 2020

	Original Budget	Final Budget	Actual	Variance With Final Budget Positive (Negative)
Excess (deficiency) of revenues over expenditures	$ (8,395)	$ (8,395)	$ 1,437,742	$ 1,446,137
Other financing sources (uses):				
Operating transfers out	(258,911)	(258,911)	(50,000)	208,911
Net change in fund balance	(267,306)	(267,306)	1,387,742	1,655,048
Fund balance:				
Beginning of year	451,861	451,861	953,203	501,342
End of year	$ 184,555	$ 184,555	$ 2,340,945	$ 2,156,390

See accompanying notes to required supplementary information.

LINCOLN COUNTY, NEVADA
REQUIRED SUPPLEMENTARY INFORMATION
MAJOR FUND - ROAD SPECIAL REVENUE FUND
SCHEDULE OF REVENUES, EXPENDITURES AND CHANGES IN FUND BALANCE
IN FUND BALANCE - BUDGET AND ACTUAL
Year Ended June 30, 2020

	Original Budget	Final Budget	Actual	Variance With Final Budget Positive (Negative)
Revenues:				
Intergovernmental:				
Gasoline tax $2.35	$ 1,080,737	$ 1,080,737	$ 972,480	$ (108,257)
Gasoline tax $1.25	620,707	620,707	560,862	(59,845)
Gasoline tax $1.75	49,452	49,452	50,546	1,094
Optional $0.01 tax	23,977	23,977	24,516	539
National forest	-	-	14,947	14,947
Total intergovernmental	1,774,873	1,774,873	1,623,351	(151,522)
Miscellaneous:				
Investment income	800	800	17,464	16,664
Other	15,000	15,000	-	(15,000)
Total miscellaneous	15,800	15,800	17,464	1,664
Total revenues	1,790,673	1,790,673	1,640,815	(149,858)
Expenditures:				
Current:				
Public works:				
Highways and streets:				
Salaries and wages	725,209	725,209	660,308	64,901
Employee benefits	330,198	330,198	294,415	35,783
Services and supplies	801,700	801,700	660,597	141,103
Capital outlay	325,000	325,000	-	325,000
Total expenditures	2,182,107	2,182,107	1,615,320	566,787
Excess (deficiency) of revenues over expenditures	(391,434)	(391,434)	25,495	416,929
Other financing sources (uses):				
Operating transfers out	(100,000)	(100,000)	(100,000)	-
Sale of capital assets	-	-	1,000	1,000
Total other financing sources (uses)	(100,000)	(100,000)	(99,000)	1,000
Net change in fund balance	(491,434)	(491,434)	(73,505)	417,929
Fund balance:				
Beginning of year	494,829	494,829	875,274	380,445
End of year	$ 3,395	$ 3,395	$ 801,769	$ 798,374

See accompanying notes to required supplementary information.

LINCOLN COUNTY, NEVADA
REQUIRED SUPPLEMENTARY INFORMATION
MAJOR FUND - LINCOLN COUNTY WATER DISTRICT
WATER RESOURCES SPECIAL REVENUE FUND
SCHEDULE OF REVENUES, EXPENDITURES AND CHANGES IN FUND BALANCE
IN FUND BALANCE - BUDGET AND ACTUAL
Year Ended June 30, 2020

	Original Budget	Final Budget	Actual	Variance With Final Budget Positive (Negative)
Revenues:				
Miscellaneous:				
Investment income	$ 500	$ 500	$ 139,972	$ 139,472
Expenditures:				
Current:				
General government:				
Services and supplies	1,356,441	1,356,441	-	1,356,441
Excess (deficiency) of revenues over expenditures	(1,355,941)	(1,355,941)	139,972	1,495,913
Other financing sources (uses):				
Operating transfers out:	-	-	(200,000)	(200,000)
Net change in fund balance	(1,355,941)	(1,355,941)	(60,028)	1,295,913
Fund balance:				
Beginning of year	1,355,941	1,355,941	2,841,210	1,485,269
End of year	$ -	$ -	$ 2,781,182	$ 2,781,182

See accompanying notes to required supplementary information.

LINCOLN COUNTY, NEVADA
REQUIRED SUPPLEMENTARY INFORMATION
MAJOR FUND - LINCOLN COUNTY LAND ACT SPECIAL USE - SPECIAL REVENUE FUND
SCHEDULE OF REVENUES, EXPENDITURES AND CHANGES IN FUND BALANCE
IN FUND BALANCE - BUDGET AND ACTUAL
Year Ended June 30, 2020

	Original Budget	Final Budget	Actual	Variance With Final Budget Positive (Negative)
Revenues:				
Intergovernmental:				
Other	$ -	$ -	$ 10,871	$ 10,871
Miscellaneous:				
Investment income	6,000	6,000	93,521	87,521
Loan interest income	-	-	7,189	7,189
Rent	30,000	30,000	30,276	276
Total miscellaneous	36,000	36,000	130,986	94,986
Total revenues	36,000	36,000	141,857	105,857
Expenditures:				
Current:				
General government:				
Salaries and wages	-	-	179,116	(179,116)
Employee benefits	-	-	7,701	(7,701)
Services and supplies	235,625	235,625	397,490	(161,865)
Capital outlay	550,000	550,000	-	550,000
Total expenditures	785,625	785,625	584,307	201,318
Excess (deficiency) of revenues over expenditures	(749,625)	(749,625)	(442,450)	307,175
Other financing sources (uses):				
Operating transfers out:				
Lincoln Co. Land Act - Grant Match	151	151	151	-
Net change in fund balance	(749,474)	(749,474)	(442,299)	307,175
Fund balance:				
Beginning of year	3,544,724	3,544,724	3,860,047	315,323
End of year	$ 2,795,250	$ 2,795,250	$ 3,417,748	$ 622,498

See accompanying notes to required supplementary information.

LINCOLN COUNTY, NEVADA
REQUIRED SUPPLEMENTARY INFORMATION
MAJOR FUND - COUNTY GRANT - SPECIAL REVENUE FUND
SCHEDULE OF REVENUES, EXPENDITURES AND CHANGES IN FUND BALANCE
IN FUND BALANCE - BUDGET AND ACTUAL
Year Ended June 30, 2020

	Original Budget	Final Budget	Actual	Variance With Final Budget Positive (Negative)
Revenues:				
Intergovernmental:				
Grants	$ -	$ 1,211,423	$ 915,171	$ (296,252)
Miscellaneous:				
Investment income	-	-	1,321	1,321
Total revenues	-	1,211,423	916,492	(294,931)
Expenditures:				
Current:				
General government	-	506,815	335,427	171,388
Public safety	-	255,018	234,932	20,086
Public works	-	127,237	125,206	2,031
Welfare	-	137,188	106,227	30,961
Culture and recreation	-	185,165	174,446	10,719
Total expenditures	-	1,211,423	976,238	235,185
Excess (deficiency) of revenues over expenditures	-	-	(59,746)	(59,746)
Other financing sources (uses):				
Operating transfers in	-	-	53,835	53,835
Net change in fund balance	-	-	(5,911)	(5,911)
Fund balance:				
Beginning of year	63,142	63,142	64,145	1,003
End of year	$ 63,142	$ 63,142	$ 58,234	$ (4,908)

See accompanying notes to required supplementary information.

LINCOLN COUNTY, NEVADA
REQUIRED SUPPLEMENTARY INFORMATION
RECONCILIATION OF THE GENERAL FUND (BUDGETARY BASIS)
TO THE GENERAL FUND (GAAP BASIS)
SCHEDULE OF REVENUE, EXPENDITURES, AND CHANGES IN FUND BALANCES
For the Year Ended June 30, 2020

	General Fund Budgetary Basis	Internally Reported Funds	General Fund GAAP Basis
Revenues:			
Taxes	$ 2,268,713	-	$ 2,268,713
Licenses and permits	21,096	-	21,096
Intergovernmental	2,605,091	-	2,605,091
Charges for services	356,374	14,833	371,207
Fines and forfeitures	254,615	-	254,615
Miscellaneous	290,543	30,280	320,823
Total revenues	5,796,432	45,113	5,841,545
Expenditures:			
Current:			
General government	1,466,808	78,383	1,545,191
Public safety	1,731,728	-	1,731,728
Judicial	1,098,278	-	1,098,278
Public works	-	83,622	83,622
Health	61,876	-	61,876
Total expenditures	4,358,690	162,005	4,520,695
Excess (deficiency) of revenues over expenditures	1,437,742	(116,892)	1,320,850
Other financing sources (uses):			
Operating transfers in	-	75,000	75,000
Operating transfers out	(50,000)	-	(50,000)
Total other financing sources (uses)	(50,000)	75,000	25,000
Net change in fund balance	1,387,742	(41,892)	1,345,850
Fund balance:			
Beginning of year	953,203	696,274	1,649,477
End of year	$ 2,340,945	$ 654,382	$ 2,995,327

See accompanying notes to required supplementary information.

LINCOLN COUNTY, NEVADA
REQUIRED SUPPLEMENTARY INFORMATION
SCHEDULE OF CHANGES IN THE COUNTY'S TOTAL OPEB LIABILITY AND RELATED RATIOS
For the Year Ended June 30, 2020

	6/30/2020	6/30/2019	6/30/2018
Total OPEB Liability			
Service cost	$ -	$ -	$ -
Interest	12,160	17,218	27,562
Changes of benefit terms	-	-	-
Differences between expected and actual experience	117,649	-	-
Changes of assumptions or other inputs	3,745	(114,834)	(270,391)
Benefit Payments	(41,195)	(51,515)	(59,983)
Net Change in total OPEB liability	92,359	(149,131)	(302,812)
Total OPEB liability - beginning	428,645	577,776	880,588
Total OPEB liability - ending	$ 521,004	$ 428,645	$ 577,776
Covered-employee payroll	$ -	$ -	$ -
Total OPEB liability as a percentage of covered-employee payroll	0.00%	0.00%	0.00%

Note: PEBP closed to new County participants as of November 1, 2008; therefore, covered payroll is zero.

Changes of assumptions and other inputs reflect the effects of changes in the discount rate each period. The following are the discount rates used in each period.

6/30/2020	2.79
6/30/2019	2.98
6/30/2018	3.13
6/30/2017	2.68

See accompanying notes to required supplementary information.

LINCOLN COUNTY, NEVADA
REQUIRED SUPPLEMENTARY INFORMATION
SCHEDULE OF THE COUNTY'S CONTRIBUTIONS TO THE
PUBLIC EMPLOYEES' RETIREMENT SYSTEM OF THE STATE OF NEVADA
For the Year Ended June 30, 2020

Year Ended June 30	Contractually Determined Contributions	Contributions in Relation to the Actuarially Determined Contributions	Contribution Deficiency (Excess)	Covered Employee Payroll	Contributions as a Percentage of Covered Employee Payroll
2014	$ 1,164,559	$ 1,164,559	$ -	$4,098,726	28.41%
2015	1,232,695	1,232,695	-	4,381,264	28.14%
2016	1,321,892	1,321,892	-	4,218,947	31.33%
2017	1,303,882	1,303,882	-	4,687,633	27.82%
2018	647,630	647,630	-	4,770,281	13.58%
2019	636,643	636,643	-	4,712,297	13.51%
2020	651,922	651,922	-	4,925,175	13.24%

Information previous to 2013 is not available.

Beginning with the year-ended 2018, all contributions shown reflect employer-paid contributions only, and employer-paid member contributions are excluded. Actuarially Determined Contributions above are based on actuarially determined contribution rates (employer portion only) from the most recent rate-setting year prior to the year shown, applied to covered payroll for year shown.

See accompanying notes to required supplementary information.

LINCOLN COUNTY, NEVADA
REQUIRED SUPPLEMENTARY INFORMATION
SCHEDULE OF THE COUNTY'S PROPORTIONATE SHARE OF THE NET PENSION LIABILITY
PUBLIC EMPLOYEES' RETIREMENT SYSTEM OF THE STATE OF NEVADA
For the Year Ended June 30, 2020

Reporting Year Ended June 30:	County's proportion of the net pension liability	County's proportionate share of the net pension liability	County's covered-employee payroll	County's proportionate share of the net pension liability as a percentage of its covered-employee payroll	Plan fiduciary net position as a percentage of the total pension liability
2015	0.08508%	8,866,756	4,098,726	216.33%	76.31%
2016	0.08864%	10,157,192	4,381,264	231.83%	75.10%
2017	0.08800%	11,842,446	4,218,947	280.70%	72.20%
2018	0.08407%	11,180,767	4,687,633	238.52%	74.40%
2019	0.08224%	11,215,383	4,770,281	235.11%	75.20%
2020	0.07859%	10,716,781	4,712,297	227.42%	76.50%

Fiscal year 2015 was the first year of implementation, therefore, only five years are shown.

The County's proportionate share of the net pension liability is based upon the measurment taken on June 30th, of the prior year.

See accompanying notes to required supplementary information.

Note 1 – Explanation of Differences between General Fund (Budgetary Basis) and General Fund (GAAP Basis)

The accompanying Reconciliation of the General Fund (Budgetary Basis) to the General Fund (GAAP Basis) presents balances combined for external financial reporting purposes.

With the implementation of GASB Statement 54, *Fund Balance Reporting and Governmental Fund Type Definitions*, the budgetary basis of accounting for the General Fund differs from generally accepted accounting principles (GAAP).

Guidance in GASB Statement 54 changed the definition of Special Revenue Funds for financial reporting purposes. Pursuant to statute, budget comparisons are required using the budget adopted. Six internally reported special revenue funds of the County (Stabilization, Planning, Rachel Jones Memorial Cemetery, Flood Control, Special Projects, Lincoln County Land Act Emergency Disaster, and Lincoln County Water Emergency Disaster) are combined with the General Fund for external reporting purposes to conform with generally accepted accounting principles.

Note 2 – Net Pension Liability

Changes in benefit terms. There have been no changes in benefit terms since the last valuation.

Changes in assumptions. Changes of assumptions and other inputs reflect the effects of changes in the discount rate each period.

Note 3 – Other Post-Employment Benefits Liability

Changes in benefit terms. There have been no changes in benefit terms since the last valuation.

Changes in assumptions. Changes of assumptions and other inputs reflect the effects of changes in the discount rate each period and the change of valuation from the alternative measurement method to the use of an actuary.

SUPPLEMENTARY INFORMATION

NONMAJOR GOVERNMENTAL FUNDS

Combining statements of all nonmajor governmental activity

LINCOLN COUNTY, NEVADA
NONMAJOR GOVERNMENTAL FUNDS
COMBINING BALANCE SHEET
June 30, 2020

	Nonmajor Special Revenue Funds	Nonmajor Capital Projects Funds	Totals
ASSETS			
Pooled cash and investments	$ 9,996,258	$ 1,410,880	$ 11,407,138
Interest receivable	23,904	4,871	28,775
Taxes receivable	19,685	1,555	21,240
Special assessment receivable	-	79,764	79,764
Due from other governments	82,464	-	82,464
Due from others	20,128	-	20,128
Inventory	8,091	-	8,091
Prepaid expense	33,554	-	33,554
Interfund receivable	170,000	-	170,000
Total assets	$ 10,354,084	$ 1,497,070	$ 11,851,154
LIABILITIES			
Accounts payable	$ 237,795	$ -	$ 237,795
Accrued payroll and benefits	33,405	-	33,405
Unearned revenue	95,830	-	95,830
Total liabilities	367,030	-	367,030
DEFERRED INFLOWS OF RESOURCES			
Unavailable revenue - property taxes	10,663	1,359	12,022
FUND BALANCE			
Nonspendable	40,091	-	40,091
Restricted for:			
Capital projects	-	1,495,711	1,495,711
Unincorporated towns	347,694	-	347,694
Multi-species conservation	903,800	-	903,800
General government	71,619	-	71,619
Public safety	51,290	-	51,290
Judicial	286,906	-	286,906
Public works	931,040	-	931,040
Health	167	-	167
Welfare	889,039	-	889,039
Culture and recreation	267,951	-	267,951
Community support	258,275	-	258,275
Intergovernmental	3,597	-	3,597
Committed for:			
Land act	138,312	-	138,312
Water	2,864,529	-	2,864,529
Lincoln County Water District	701,379		701,379
General government	2,166,944	-	2,166,944
Public works	23,382	-	23,382
Health	33,571	-	33,571
Unassigned	(3,195)	-	(3,195)
Total fund balance	9,976,391	1,495,711	11,472,102
Total liabilities, deferred inflows of resources, and fund balance	$ 10,354,084	$ 1,497,070	$ 11,851,154

LINCOLN COUNTY, NEVADA
NONMAJOR GOVERNMENTAL FUNDS
COMBINING STATEMENT OF REVENUES, EXPENDITURES,
AND CHANGES IN FUND BALANCE
Year Ended June 30, 2020

	Nonmajor Special Revenue Funds	Nonmajor Capital Projects Funds	Totals
Revenues:			
Taxes	$ 867,478	$ 116,425	$ 983,903
Licenses and permits	4,855	-	4,855
Intergovernmental	1,564,830	109	1,564,939
Charges for services	615,490	-	615,490
Fines and forfeitures	30,503	-	30,503
Special assessment	-	186,003	186,003
Miscellaneous	409,717	60,855	470,572
Total revenues	3,492,873	363,392	3,856,265
Expenditures:			
Current:			
General government	1,183,637	-	1,183,637
Public safety	39,935	-	39,935
Judicial	112,845	-	112,845
Public works	75,228	-	75,228
Health	252,704	-	252,704
Welfare	524,842	-	524,842
Culture and recreation	345,391	-	345,391
Community support	247,029	-	247,029
Intergovernmental	119,144	8,169	127,313
Capital outlay	-	148,804	148,804
Debt service:			
Principal	24,157	77,642	101,799
Interest	1,784	5,269	7,053
Total expenditures	2,926,696	239,884	3,166,580
Excess (deficiency) of revenues over expenditures	566,177	123,508	689,685
Other financing sources (uses):			
Operating transfers in	343,308	220,503	563,811
Operating transfers out	(332,294)	(120,503)	(452,797)
Capital lease proceeds	-	100,300	100,300
Total other financing sources (uses)	11,014	200,300	211,314
Net change in fund balance before special items	577,191	323,808	900,999
Special items:			
Disposal of Tri-County Weed Control	(313,853)	-	(313,853)
Net change in fund balance	263,338	323,808	587,146
Fund balance:			
Beginning of year	9,713,053	1,171,903	10,884,956
End of year	$ 9,976,391	$ 1,495,711	$ 11,472,102

MAJOR FUNDS

GENERAL FUND

The General Fund is used to account for resources traditionally associated with government which are not required legally or by sound financial management to be accounted for in another fund.

ROAD FUND

The Road Fund is used to account for revenues and expenditures utilized to maintain County roads.

LINCOLN COUNTY WATER DISTRICT WATER RESOURCES FUND

The Lincoln County Water District Water Resources Fund is used to account for general activities of the District, a blended component unit of the government.

LINCOLN COUNTY LAND ACT SPECIAL USE FUND

The Lincoln County Land Act Special Use Fund is used to account for land sale monies to be spent per County ordinances.

COUNTY GRANT FUND

The County Grant Fund is used to account for state and federal grant monies received to be spent on specified projects.

LINCOLN COUNTY, NEVADA
RECONCILIATION OF THE GENERAL FUND (BUDGETARY BASIS)
TO THE GENERAL FUND (GAAP BASIS)
BALANCE SHEET
June 30, 2020

	General Fund Budgetary Basis	Internally Reported Funds	General Fund GAAP Basis
ASSETS			
Pooled cash and investments	$ 2,327,137	$ 662,281	$ 2,989,418
Interest receivable	6,680	1,049	7,729
Taxes receivable	30,333	-	30,333
Due from other governments	291,829	-	291,829
Total assets	$ 2,655,979	$ 663,330	$ 3,319,309
LIABILITIES			
Accounts payable	$ 70,653	$ 6,229	$ 76,882
Accrued payroll and benefits	217,868	2,719	220,587
Total liabilities	288,521	8,948	297,469
DEFERRED INFLOWS OF RESOURCES			
Unavailable revenue - property taxes	26,513	-	26,513
FUND BALANCE			
Restricted for:			
Stabilization	-	137,113	137,113
Rachel Jones Cemetery	-	827	827
General government	-	357,965	357,965
Coyote Springs GID dissolution	916,307	-	916,307
Committed for:			
Planning	-	43,603	43,603
Flood Control	-	39,015	39,015
Land Act	-	9,408	9,408
Water	-	66,451	66,451
Assigned for:			
Subsequent year	1,424,638	-	1,424,638
Total fund balance	2,340,945	654,382	2,995,327
Total liabilities, deferred inflows of resources, and fund balance	$ 2,655,979	$ 663,330	$ 3,319,309

LINCOLN COUNTY, NEVADA
MAJOR FUND - GENERAL FUND (BUDGETARY BASIS)
COMPARATIVE BALANCE SHEETS
June 30, 2020 and 2019

	2020	2019
ASSETS		
Pooled cash and investments	$ 2,327,137	$ 950,225
Interest receivable	6,680	18,939
Taxes receivable	30,333	33,425
Due from other governments	291,829	249,422
Total assets	$ 2,655,979	$ 1,252,011
LIABILITIES		
Accounts payable	$ 70,653	$ 81,550
Accrued payroll and benefits	217,868	190,746
Total liabilities	288,521	272,296
DEFERRED INFLOWS OF RESOURCES		
Unavailable revenue - property taxes	26,513	26,512
FUND BALANCE		
Restricted for Coyote Springs GID	916,307	-
Assigned for subsequent year	1,424,638	451,861
Unassigned	-	501,342
Total fund balance	2,340,945	953,203
Total liabilities, deferred inflows of resources, and fund balance	$ 2,655,979	$ 1,252,011

LINCOLN COUNTY, NEVADA
MAJOR FUND - GENERAL FUND
SCHEDULE OF REVENUES, EXPENDITURES, AND CHANGES IN FUND BALANCE
BUDGET (BUDGETARY BASIS) AND ACTUAL
Year Ended June 30, 2020
(With Comparative Actual Amounts for Year Ended June 30, 2019)

	2020 Budget	2020 Actual	Variance - Positive (Negative)	2019 Actual
Revenues:				
Taxes	$ 2,324,465	$ 2,268,713	$ (55,752)	$ 2,240,230
Licenses and permits	18,150	21,096	2,946	20,717
Intergovernmental	1,703,300	2,605,091	901,791	1,677,489
Charges for services	382,500	356,374	(26,126)	295,730
Fines and forfeitures	360,000	254,615	(105,385)	361,968
Miscellaneous	55,000	290,543	235,543	214,114
Total revenues	4,843,415	5,796,432	953,017	4,810,248
Expenditures:				
Current:				
General government	1,702,833	1,466,808	236,025	1,499,110
Public safety	1,813,387	1,731,728	81,659	1,697,754
Judicial	1,273,126	1,098,278	174,848	1,122,681
Health	62,464	61,876	588	52,387
Total expenditures	4,851,810	4,358,690	493,120	4,371,932
Excess (deficiency) of revenues over expenditures	(8,395)	1,437,742	1,446,137	438,316
Other financing sources (uses):				
Operating transfers out	(258,911)	(50,000)	208,911	(258,252)
Net change in fund balance	(267,306)	1,387,742	1,655,048	180,064
Fund balance:				
Beginning of year	451,861	953,203	501,342	773,139
End of year	$ 184,555	$ 2,340,945	$ 2,156,390	$ 953,203

LINCOLN COUNTY, NEVADA
MAJOR FUND - GENERAL FUND
SCHEDULE OF REVENUES COMPARED TO BUDGET (BUDGETARY BASIS)
Year Ended June 30, 2020
(With Comparative Actual Amounts for Year Ended June 30, 2019)

	2020 Budget	2020 Actual	Variance - Positive (Negative)	2019 Actual
Revenues:				
Taxes:				
Property taxes	$ 2,324,465	$ 2,268,713	$ (55,752)	$ 2,240,230
Licenses and permits:				
Business licenses	7,200	10,685	3,485	9,945
Liquor licenses	5,100	6,070	970	6,560
Gaming licenses	5,200	4,005	(1,195)	3,750
Marriage licenses	650	336	(314)	462
Total licenses and permits	18,150	21,096	2,946	20,717
Intergovernmental:				
Gaming tax	141,000	127,467	(13,533)	132,437
Private car line tax	4,100	-	(4,100)	2
Virgin Valley Water District	7,000	10,856	3,856	2,414
Consolidated tax	1,388,703	1,420,022	31,319	1,385,248
Grants	56,262	21,610	(34,652)	66,210
Lincoln County Water District contract	18,000	18,000	-	-
Coyote Springs GID dissolution	-	916,307	916,307	-
Marijuana fees	88,235	88,270	35	88,235
Fish and wildlife	-	2,559	2,559	2,943
Total intergovernmental	1,703,300	2,605,091	901,791	1,677,489
Charges for services:				
Clerk fees	14,000	9,543	(4,457)	8,988
Recorder fees	50,000	51,923	1,923	43,074
Assessor commissions	65,500	40,986	(24,514)	40,008
Sheriff fees	2,500	9,830	7,330	6,530
Tax penalties and costs	45,000	50,574	5,574	59,542
District attorney fees	500	1	(499)	4,564
Civil fees	-	3,217	3,217	3,374
Security contract	122,000	122,000	-	61,000
Caliente police contract	75,000	64,800	(10,200)	64,800
Caliente court contract	7,000	3,500	(3,500)	3,850
Spay & neuter license plate fees	1,000	-	(1,000)	-
Total charges for services	382,500	356,374	(26,126)	295,730
Fines and forfeitures:				
Fines and forfeitures	360,000	254,615	(105,385)	361,968
Miscellaneous:				
Investment income	10,000	222,243	212,243	167,048
Rent, sales, refunds	40,000	32,742	(7,258)	38,654
Excess proceeds	-	24,697	24,697	-
Other	5,000	10,861	5,861	8,412
Total miscellaneous	55,000	290,543	235,543	214,114
Total revenues	$ 4,843,415	$ 5,796,432	$ 953,017	$ 4,810,248

LINCOLN COUNTY, NEVADA
MAJOR FUND - GENERAL FUND
SCHEDULE OF EXPENDITURES COMPARED TO BUDGET (BUDGETARY BASIS)
Year Ended June 30, 2020
(With Comparative Actual Amounts for Year Ended June 30, 2019)

	2020 Budget	2020 Actual	Variance - Positive (Negative)	2019 Actual
Expenditures:				
Current:				
General government:				
County commissioners:				
Salaries and wages	$ 109,887	$ 106,505	$ 3,382	$ 108,751
Employee benefits	74,253	68,948	5,305	63,290
Services and supplies	37,500	24,430	13,070	23,517
Total county commissioners	221,640	199,883	21,757	195,558
Executive officer:				
Salaries and wages	26,603	39,066	(12,463)	20,675
Employee benefits	17,315	23,846	(6,531)	12,511
Services and supplies	5,150	3,394	1,756	1,312
Total executive officer	49,068	66,306	(17,238)	34,498
Clerk:				
Salaries and wages	125,667	108,256	17,411	119,236
Employee benefits	54,668	48,888	5,780	51,388
Services and supplies	36,700	10,912	25,788	21,468
Total clerk	217,035	168,056	48,979	192,092
Treasurer:				
Salaries and wages	120,043	118,043	2,000	115,494
Employee benefits	53,684	53,118	566	50,062
Services and supplies	17,600	11,669	5,931	10,905
Total treasurer	191,327	182,830	8,497	176,461
Auditor and recorder:				
Salaries and wages	133,915	134,367	(452)	147,844
Employee benefits	57,180	65,811	(8,631)	62,164
Services and supplies	20,300	12,530	7,770	11,782
Total auditor and recorder	211,395	212,708	(1,313)	221,790
Assessor:				
Salaries and wages	152,146	159,493	(7,347)	152,866
Employee benefits	76,576	69,694	6,882	72,854
Services and supplies	23,700	11,776	11,924	10,558
Total assessor	252,422	240,963	11,459	236,278
Grant administrator:				
Salaries and wages	59,779	19,737	40,042	57,190
Employee benefits	21,608	7,486	14,122	20,032
Services and supplies	7,000	1,701	5,299	4,033
Total grant administrator	$ 88,387	$ 28,924	$ 59,463	$ 81,255

LINCOLN COUNTY, NEVADA
MAJOR FUND - GENERAL FUND
SCHEDULE OF EXPENDITURES COMPARED TO BUDGET (BUDGETARY BASIS)
Year Ended June 30, 2020
(With Comparative Actual Amounts for Year Ended June 30, 2019)

	2020 Budget	2020 Actual	Variance - Positive (Negative)	2019 Actual
General government (Continued):				
Business license:				
Salaries and wages	$ 12,385	$ 7,808	$ 4,577	$ 6,770
Employee benefits	6,563	2,055	4,508	1,503
Services and supplies	1,500	682	818	898
Total business license	20,448	10,545	9,903	9,171
Buildings and grounds:				
Pioche:				
Salaries and wages	34,292	39,421	(5,129)	46,141
Employee benefits	10,173	3,553	6,620	9,310
Services and supplies	133,825	101,469	32,356	104,628
Total Pioche	178,290	144,443	33,847	160,079
Alamo:				
Salaries and wages	8,208	8,785	(577)	5,634
Employee benefits	857	13,435	(12,578)	588
Services and supplies	22,000	10,026	11,974	14,446
Total Alamo	31,065	32,246	(1,181)	20,668
Total buildings and grounds	209,355	176,689	32,666	180,747
Other general expenses:				
Employee benefits	42,000	28,141	13,859	41,059
Services and supplies	199,756	151,763	47,993	130,201
Total other general expenses	241,756	179,904	61,852	171,260
Total general government	$ 1,702,833	$ 1,466,808	$ 236,025	$ 1,499,110

LINCOLN COUNTY, NEVADA
MAJOR FUND - GENERAL FUND
SCHEDULE OF EXPENDITURES COMPARED TO BUDGET (BUDGETARY BASIS)
Year Ended June 30, 2020
(With Comparative Actual Amounts for Year Ended June 30, 2019)

	2020 Budget	2020 Actual	Variance - Positive (Negative)	2019 Actual
Public safety:				
Sheriff:				
Salaries and wages	$ 873,501	$ 829,904	$ 43,597	$ 837,160
Employee benefits	535,433	521,446	13,987	506,223
Services and supplies	210,681	200,116	10,565	155,051
Capital outlay	-	-	-	24,692
Total sheriff	1,619,615	1,551,466	68,149	1,523,126
Emergency management:				
Salaries and wages	28,486	25,075	3,411	27,374
Employee benefits	12,555	10,562	1,993	9,870
Services and supplies	5,500	3,242	2,258	265
Total emergency management	46,541	38,879	7,662	37,509
Caliente contract:				
Salaries and wages	90,301	87,416	2,885	86,334
Employee benefits	52,330	53,092	(762)	49,901
Services and supplies	4,600	875	3,725	884
Total Caliente contract	147,231	141,383	5,848	137,119
Total public safety	1,813,387	1,731,728	81,659	1,697,754
Judicial:				
District court:				
Salaries and wages	118,245	128,945	(10,700)	65,512
Services and supplies	258,700	181,829	76,871	237,990
Total district court	376,945	310,774	66,171	303,502
District attorney:				
Salaries and wages	224,974	232,201	(7,227)	219,371
Employee benefits	98,072	88,405	9,667	81,086
Services and supplies	28,000	14,777	13,223	17,438
Capital outlay	-	-	-	6,424
Total district attorney	$ 351,046	$ 335,383	$ 15,663	$ 324,319

LINCOLN COUNTY, NEVADA
MAJOR FUND - GENERAL FUND
SCHEDULE OF EXPENDITURES COMPARED TO BUDGET (BUDGETARY BASIS)
Year Ended June 30, 2020
(With Comparative Actual Amounts for Year Ended June 30, 2019)

	2020 Budget	2020 Actual	Variance - Positive (Negative)	2019 Actual
Judicial (Continued):				
Law library	$ 8,000	$ 6,762	$ 1,238	$ 8,306
Public guardian	2,000	-	2,000	537
Public administrator	2,000	551	1,449	468
Juvenile officers:				
Salaries and wages	62,317	-	62,317	68,050
Employee benefits	35,796	-	35,796	31,763
Services and supplies	20,000	42,221	(22,221)	6,580
Total juvenile officers	118,113	42,221	75,892	106,393
Alamo:				
Salaries and wages	129,504	130,986	(1,482)	127,794
Employee benefits	66,344	61,747	4,597	58,074
Services and supplies	17,250	17,210	40	13,429
Total Alamo	213,098	209,943	3,155	199,297
Meadow Valley:				
Salaries and wages	114,604	116,076	(1,472)	110,558
Employee benefits	62,420	63,937	(1,517)	57,528
Services and supplies	24,900	12,631	12,269	11,773
Total Meadow Valley	201,924	192,644	9,280	179,859
Total judicial	1,273,126	1,098,278	174,848	1,122,681
Health:				
Public Nurse:				
Salaries and wages	14,196	14,483	(287)	2,132
Employee benefits	1,482	1,527	(45)	163
Services and supplies	45,786	45,866	(80)	50,092
Total Meadow Valley	61,464	61,876	(412)	52,387
Animal Control:				
Services and supplies	1,000	-	1,000	-
Total health	62,464	61,876	588	52,387
Total expenditures	$ 4,851,810	$ 4,358,690	$ 493,120	$ 4,371,932

LINCOLN COUNTY, NEVADA
MAJOR FUND - ROAD SPECIAL REVENUE FUND
COMPARATIVE BALANCE SHEETS
June 30, 2020 and 2019

	2020	2019
ASSETS		
Pooled cash and investments	$ 680,946	$ 541,005
Interest receivable	1,068	1,143
Due from other governments	246,465	438,509
Total assets	$ 928,479	$ 980,657
LIABILITIES		
Accounts payable	$ 75,835	$ 60,064
Accrued payroll and benefits	50,875	45,319
Total liabilities	126,710	105,383
FUND BALANCE		
Restricted	801,769	875,274
Total liabilities and fund balance	$ 928,479	$ 980,657

LINCOLN COUNTY, NEVADA
MAJOR FUND - ROAD SPECIAL REVENUE FUND
SCHEDULE OF REVENUES, EXPENDITURES, AND CHANGES IN FUND BALANCE - BUDGET (GAAP BASIS) AND ACTUAL
Year Ended June 30, 2020
(With Comparative Actual Amounts for Year Ended June 30, 2019)

	2020 Budget	2020 Actual	Variance - Positive (Negative)	2019 Actual
Revenues:				
Intergovernmental:				
Gasoline tax $2.35	$ 1,080,737	$ 972,480	$ (108,257)	$ 1,047,520
Gasoline tax $1.25	620,707	560,862	(59,845)	603,047
Gasoline tax $1.75	49,452	50,546	1,094	49,190
Optional $0.01 tax	23,977	24,516	539	23,804
National forest	-	14,947	14,947	15,140
Total intergovernmental	1,774,873	1,623,351	(151,522)	1,738,701
Miscellaneous:				
Investment income	800	17,464	16,664	10,080
Other	15,000	-	(15,000)	-
Total miscellaneous	15,800	17,464	1,664	10,080
Total revenues	1,790,673	1,640,815	(149,858)	1,748,781
Expenditures:				
Current:				
Public works:				
Highways and streets:				
Salaries and wages	725,209	660,308	64,901	625,336
Employee benefits	330,198	294,415	35,783	271,964
Services and supplies	801,700	660,597	141,103	513,047
Capital outlay	325,000	-	325,000	-
Total expenditures	2,182,107	1,615,320	566,787	1,410,347
Excess (deficiency) of revenues over expenditures	(391,434)	25,495	416,929	338,434
Other financing sources (uses):				
Operating transfers out	(100,000)	(100,000)	-	(100,000)
Sale of capital assets	-	1,000	1,000	-
Total other financing sources	(100,000)	(99,000)	1,000	(100,000)
Net change in fund balance	(491,434)	(73,505)	417,929	238,434
Fund balance:				
Beginning of year	494,829	875,274	380,445	636,840
End of year	$ 3,395	$ 801,769	$ 798,374	$ 875,274

LINCOLN COUNTY, NEVADA
MAJOR FUND - LINCOLN COUNTY WATER DISTRICT
WATER RESOURCES SPECIAL REVENUE FUND
COMPARATIVE BALANCE SHEETS
June 30, 2020 and 2019

	2020	2019
ASSETS		
Pooled cash and investments	$ 2,768,999	$ 2,828,036
Interest receivable	12,183	13,174
Total assets	$ 2,781,182	$ 2,841,210
LIABILITIES		
Accounts payable	$ -	$ -
FUND BALANCE		
Committed	2,781,182	2,841,210
Total liabilities and fund balance	$ 2,781,182	$ 2,841,210

LINCOLN COUNTY, NEVADA
MAJOR FUND - LINCOLN COUNTY WATER DISTRICT
WATER RESOURCES SPECIAL REVENUE FUND
SCHEDULE OF REVENUES, EXPENDITURES, AND CHANGES IN FUND BALANCE - BUDGET (GAAP BASIS) AND ACTUAL
Year Ended June 30, 2020
(With Comparative Actual Amounts for Year Ended June 30, 2019)

	2020 Budget	2020 Actual	Variance - Positive (Negative)	2019 Actual
Revenues:				
Miscellaneous:				
Investment income	$ 500	$ 139,972	$ 139,472	$ 107,795
Expenditures:				
Current:				
General government:				
Services and supplies	1,356,441	-	1,356,441	-
Excess (deficiency) of revenues over expenditures	(1,355,941)	139,972	1,495,913	107,795
Other financing sources (uses):				
Operating transfers out	-	(200,000)	(200,000)	-
Net change in fund balance	(1,355,941)	(60,028)	1,295,913	107,795
Fund balance:				
Beginning of year	1,355,941	2,841,210	1,485,269	2,733,415
End of year	$ -	$ 2,781,182	$ 2,781,182	$ 2,841,210

LINCOLN COUNTY, NEVADA
MAJOR FUND - LINCOLN COUNTY LAND ACT - SPECIAL USE SPECIAL REVENUE FUND
COMPARATIVE BALANCE SHEETS
June 30, 2020 and 2019

	2020	2019
ASSETS		
Pooled cash and investments	$ 2,997,926	$ 3,671,992
Interest receivable	5,718	8,055
Interfund receivable	600,921	180,000
Total assets	$ 3,604,565	$ 3,860,047
LIABILITIES		
Accrued payroll and benefits	$ 186,817	$ -
FUND BALANCE		
Committed	3,417,748	3,860,047
Total liabilities and fund balance	$ 3,604,565	$ 3,860,047

LINCOLN COUNTY, NEVADA
MAJOR FUND - LINCOLN COUNTY LAND ACT - SPECIAL USE SPECIAL REVENUE FUND
SCHEDULE OF REVENUES, EXPENDITURES, AND CHANGES
IN FUND BALANCE - BUDGET (GAAP BASIS) AND ACTUAL
Year Ended June 30, 2020
(With Comparative Actual Amounts for Year Ended June 30, 2019)

	2020 Budget	2020 Actual	Variance - Positive (Negative)	2019 Actual
Revenues:				
Intergovernmental:				
Grant	$ -	$ 10,871	$ 10,871	$ -
Miscellaneous:				
Investment income	6,000	93,521	87,521	71,047
Loan interest income	-	7,189	7,189	-
Rent	30,000	30,276	276	30,276
Total miscellaneous	36,000	130,986	94,986	101,323
Total revenues	36,000	141,857	105,857	101,323
Expenditures:				
Current:				
General government:				
Salaries and wages	-	179,116	(179,116)	-
Employee benefits	-	7,701	(7,701)	-
Service and supplies	235,625	397,490	(161,865)	-
Capital outlay	550,000	-	550,000	-
Total general government	785,625	584,307	201,318	-
Excess (deficiency) of revenues over expenditures	(749,625)	(442,450)	307,175	101,323
Other financing sources (uses):				
Operating transfers in	151	151	-	-
Net change in fund balance	(749,474)	(442,299)	307,175	101,323
Fund balance:				
Beginning of year	3,544,724	3,860,047	315,323	$ 3,758,724
End of year	$ 2,795,250	$ 3,417,748	$ 622,498	$ 3,860,047

LINCOLN COUNTY, NEVADA
MAJOR FUND - COUNTY GRANT SPECIAL REVENUE FUND
COMPARATIVE BALANCE SHEETS
June 30, 2020 and 2019

	2020	2019
ASSETS		
Pooled cash and investments	$ 47,488	$ 46,967
Interest receivable	159	114
Due from other governments	368,298	257,043
Total assets	$ 415,945	$ 304,124
LIABILITIES		
Accounts payable	$ 95,871	$ 56,857
Accrued payroll and benefits	19,422	14,643
Unearned revenue	120,912	168,479
Total liabilities	236,205	239,979
DEFERRED INFLOWS OF RESOURCES		
Unavailable revenue - grant revenue	121,506	-
FUND BALANCE		
Committed	58,234	64,145
Total liabilities and fund balance	$ 415,945	$ 304,124

LINCOLN COUNTY, NEVADA
MAJOR FUND - COUNTY GRANT SPECIAL REVENUE FUND
SCHEDULE OF REVENUES, EXPENDITURES, AND CHANGES IN FUND BALANCE - BUDGET (GAAP BASIS) AND ACTUAL
Year Ended June 30, 2020
(With Comparative Actual Amounts for Year Ended June 30, 2019)

	2020 Budget	2020 Actual	Variance - Positive (Negative)	2019 Actual
Revenues:				
Intergovernmental:				
Grants	$ 1,211,423	$ 915,171	$ (296,252)	$ 1,119,155
Miscellaneous:				
Investment income	-	1,321	1,321	1,003
Total revenues	1,211,423	916,492	(294,931)	1,120,158
Expenditures:				
Current:				
General government	506,815	335,427	171,388	340,665
Public safety	255,018	234,932	20,086	190,166
Public works	127,237	125,206	2,031	468,671
Welfare	137,188	106,227	30,961	111,335
Culture and recreation	185,165	174,446	10,719	17,292
Total expenditures	1,211,423	976,238	235,185	1,128,129
Excess (deficiency) of revenues over expenditures	-	(59,746)	(59,746)	(7,971)
Other financing sources (uses):				
Operating transfers in	-	53,835	53,835	8,974
Net change in fund balance	-	(5,911)	(5,911)	1,003
Fund balance:				
Beginning of year	63,142	64,145	1,003	63,142
End of year	$ 63,142	$ 58,234	$ (4,908)	$ 64,145

MAJOR ENTERPRISE FUNDS

Enterprise Funds are used to account for operations that are financed and operated in a manner similar to private business enterprises–where the intent of the County's management is that the costs of providing goods or services be financed or recovered primarily through user charges.

The Detention Center Fund is used to account for revenues and expenses of the Detention Center operations. The County provides inmate beds to other local governments at a daily fee per bed as well as beds for Lincoln County inmates.

Solid Waste Fund is used to account for revenues and expenses of the garbage disposal services throughout the County.

LINCOLN COUNTY, NEVADA
MAJOR FUND - DETENTION CENTER ENTERPRISE FUND (064)
STATEMENT OF NET POSITION
June 30, 2020 and 2019

	2020	2019
ASSETS		
Current assets:		
Pooled cash and investments	$ 59,969	$ 134,754
Accounts receivable	148,575	160,804
Total current assets	208,544	295,558
Capital assets:		
Property, plant and equipment (net of depreciation)	787,218	831,505
Total assets	995,762	1,127,063
DEFERRED OUTFLOWS OF RESOURCES		
Deferred pension charge	399,544	419,985
LIABILITIES		
Current liabilities:		
Accounts payable	11,194	21,865
Accrued payroll and benefits	212,007	131,636
Accrued compensated absences	77,624	111,415
Total current liabilities	300,825	264,916
Non-current liabilities:		
Accrued compensated absences	56,210	65,250
Net pension liability	3,126,874	3,247,750
Total non-current liabilities	3,183,084	3,313,000
Total liabilities	3,483,909	3,577,916
DEFERRED INFLOWS OF RESOURCES		
Deferred pension charge	414,682	278,397
NET POSITION		
Invested in capital assets, net of related debt	787,218	831,505
Unrestricted	(3,290,503)	(3,140,770)
Total net position	$ (2,503,285)	$ (2,309,265)

LINCOLN COUNTY, NEVADA
MAJOR FUND - DETENTION CENTER ENTERPRISE FUND (064)
SCHEDULE OF REVENUES, EXPENSES, AND CHANGES IN NET POSITION - BUDGET (GAAP BASIS) AND ACTUAL
Year Ended June 30, 2020
(With Comparative Actual Amounts for Year Ended June 30, 2019)

	2020 Budget	2020 Actual	Variance - Positive (Negative)	2019 Actual
Revenues:				
Charges for services:				
Inmate fees	$ 1,916,250	$ 1,873,065	$ (43,185)	$ 1,867,300
Operating expenses:				
Public safety:				
Salaries and wages	1,049,527	1,121,479	(71,952)	980,005
Employee benefits	612,055	642,605	(30,550)	508,390
Services and supplies	361,200	318,714	42,486	380,597
Depreciation	65,000	44,287	20,713	45,308
Total operating expenses	2,087,782	2,127,085	(39,303)	1,914,300
Operating income (loss)	(171,532)	(254,020)	(82,488)	(47,000)
Non-operating revenues (expenses):				
Operating transfers in	60,000	60,000	-	97,500
Changes in net position	$ (111,532)	(194,020)	$ (82,488)	50,500
Net position:				
Beginning of year		(2,309,265)		(2,359,765)
End of year		$ (2,503,285)		$ (2,309,265)

LINCOLN COUNTY, NEVADA
MAJOR FUND - DETENTION CENTER ENTERPRISE FUND
COMPARATIVE STATEMENT OF CASH FLOWS
June 30, 2020 and 2019

	2020	2019
Cash flows from operating activities:		
Cash received from customers	$ 1,885,294	$ 2,025,172
Cash paid for services and supplies	(329,385)	(384,273)
Cash paid for salaries and benefits	(1,690,694)	(1,514,110)
Net cash provided (used) by operating activities	(134,785)	126,789
Cash flows from noncapital financing activities:		
Due to other funds	-	(89,535)
Operating transfers in	60,000	97,500
Net cash provided (used) by noncapital financing activities	60,000	7,965
Net change in cash and cash equivalents	(74,785)	134,754
Cash:		
Beginning of year	134,754	-
End of year	$ 59,969	$ 134,754
Reconciliation of operating income (loss) to net cash provided (used) by operating activities:		
Operating income (loss)	$ (254,020)	$ (47,000)
Adjustments to reconcile operating income (loss) to net cash provided (used) by operating activities:		
Depreciation expense	44,287	45,308
(Increase) decrease in accounts receivables	12,229	157,872
Increase (decrease) in accounts payable	(10,671)	(3,676)
Increase (decrease) in accrued payroll and benefits	80,371	7,825
Increase (decrease) in compensated absences	(42,831)	(16,089)
Increase (decrease) in net pension liability	(120,876)	11,411
Increase (decrease) in net pension expense	156,726	(28,862)
Total adjustments	119,235	173,789
Net cash provided (used) by operating activities	$ (134,785)	$ 126,789

LINCOLN COUNTY, NEVADA
MAJOR SOLID WASTE ENTERPRISE FUND
STATEMENT OF NET POSITION
June 30, 2020

	2020	2019
ASSETS		
Current assets:		
Pooled cash and investments	$ 640,194	$ 559,621
Accounts receivable	131,219	142,054
Interest receivable	133	133
Restricted assets:		
Pooled cash and investments	83,287	61,118
Capital assets:		
Land	200,000	200,000
Property and equipment (net of depreciation)	771,259	388,088
Total assets	1,826,092	1,351,014
DEFERRED OUTFLOWS OF RESOURCES		
Deferred pension charge	20,066	42,641
LIABILITIES		
Current liabilities:		
Accounts payable	7,525	10,560
Accrued payroll and benefits	17,898	15,845
Accrued compensated absences	8,702	8,445
Interfund payable	83,802	20,000
Accrued interest payable	8,174	-
Total current liabilities	126,101	54,850
Non-current liabilities:		
Landfill closure and postclosure costs	80,000	60,000
Interfund payable	687,119	340,000
Accrued compensated absences	5,801	5,697
Net pension liability	-	-
Total non-current liabilities	772,920	405,697
Total liabilities	899,021	460,547
DEFERRED INFLOWS OF RESOURCES		
Deferred pension charge	3,749	27,654
NET POSITION		
Invested in capital assets, net of related debt	971,259	588,088
Unrestricted	(27,871)	317,366
Total net position	$ 943,388	$ 905,454

LINCOLN COUNTY, NEVADA
MAJOR SOLID WASTE ENTERPRISE FUND
SCHEDULE OF REVENUES, EXPENSES, AND CHANGES IN NET POSITION -
BUDGET (GAAP BASIS) AND ACTUAL
Year Ended June 30, 2020
(With Comparative Actual Amounts for Year Ended June 30, 2019)

	2020		Variance-Positive	2019
	Budget	Actual	(Negative)	Actual
Operating revenues:				
Charges for services	$ 487,000	$ 610,739	$ 123,739	$ 638,124
Operating expenses:				
Sanitation:				
Salaries and wages	243,849	241,228	2,621	231,487
Employee benefits	98,028	95,898	2,130	82,873
Service and supplies	220,500	109,723	110,777	131,808
Closure and postclosure landfill costs	20,000	20,000	-	20,000
Depreciation	60,000	92,762	(32,762)	45,169
Total operating expenses	642,377	559,611	82,766	511,337
Operating income (loss)	(155,377)	51,128	206,505	126,787
Non-operating revenues (expenses):				
Investment income	(8,220)	2,169	10,389	1,174
Interest expense	-	(15,363)	(15,363)	-
Total non-operating revenues (expenses)	(8,220)	(13,194)	(4,974)	1,174
Change in net position	$ (163,597)	37,934	$ 201,531	127,961
Net Position:				
Beginning of year		905,454		777,493
End of year		$ 943,388		$ 905,454

LINCOLN COUNTY, NEVADA
MAJOR SOLID WASTE ENTERPRISE FUND
STATEMENT OF CASH FLOWS
Year Ended June 30, 2020

	2020	2019
Cash flows from operating activities:		
Cash received from customers	$ 621,574	$ 640,760
Cash paid for services and supplies	(112,758)	(138,645)
Cash paid for salaries and benefits	(336,042)	(321,206)
Net cash provided (used) by operating activities	172,774	180,909
Cash flows from capital and related financing activities:		
Purchases of capital assets	(475,933)	(28,149)
Interfund payable	410,921	(20,000)
Interest paid	(7,189)	-
Net cash provided by investing activities	(72,201)	(48,149)
Cash flows from investing activities:		
Investment income	2,169	1,113
Net change in cash and cash equivalents	102,742	133,873
Cash:		
Beginning of year	620,739	486,866
End of year	$ 723,481	$ 620,739
Reconciliation of operating income to net cash provided (used) by operating activities:		
Operating income (loss)	$ 51,128	$ 126,787
Adjustments to reconcile operating income to net cash provided (used) by operating activities:		
Depreciation expense	92,762	45,169
(Increase) decrease in accounts receivable	10,835	2,636
Increase (decrease) in accounts payable	(3,035)	(6,837)
Increase (decrease) in accrued payroll and benefits	2,053	435
Increase (decrease) in compensated absences	361	(4,911)
Increase (decrease) in land fill closure	20,000	20,000
Increase (decrease) in net pension liability	-	(472)
Increase (decrease) in net pension expense	(1,330)	(1,898)
Total adjustments	121,646	54,122
Net cash provided (used) by operating activities	$ 172,774	$ 180,909

NONMAJOR SPECIAL REVENUE FUNDS

Special Revenue Funds are used to account for specific revenues that are legally restricted to expenditures for particular purposes.

The Pioche Town, Alamo Town, and Panaca Town Funds are used to account for the activities related to these unincorporated towns.

The Federal in Lieu Tax Fund is used to account for taxes received in lieu of property tax from the Federal Government for property owned by the Federal Government located in the County.

The Resource Development Fund is used to account for grant revenues utilized for economic development.

The Library Funds are used to account for the library services in the County.

The Museum Fund is used to account for operations of the County museum in Pioche, Nevada.

The Senior Nutrition Fund is used to account for federal monies, meal income, and related expenditures incurred to provide meals to senior citizens.

The Transportation Fund is used to account for revenues and expenditures of the senior bus service offered to County residents.

The Agricultural Extension Fund is used to account for services of the state agricultural extension agent.

The Indigent and Medical Indigent Funds are used to account for revenues and expenditures for assistance given to indigents in the County.

The China Springs Fund is used to account for revenues and expenditures pursuant to NRS 62B.150.

The Ambulance Fund is used to account for revenues and expenditures of the ambulance service in Pioche and Meadow Valley.

The Regional Streets and Highways Fund is used for gas taxes collected to be spent on roads.

The Room Tax Fund is used to account for room taxes collected to be spent on the promotion of tourism for the County.

The Legal Aid Fund is used to account for expenditures for senior citizens who cannot afford legal fees.

The Forensic Services fund accounts for fees collected from certain accused criminals for the specific use of forensic lab work performed for Justice Court pursuant to NRS 176.

The Administrative Assessment Fund is used to account for monies used to enhance the justice system.

The Forfeitures Fund is used to account for revenues and expenditures created by the confiscation of assets in the process of enforcing drug laws.

The Recorder Technology Fund is used to account for fees collected and used to enhance the records maintenance in the County Recorder's office.

The L.C. Housing Authority Fund is used to account for low-income housing in Lincoln County.

The Alamo Clinic Fund is used to account for revenues and expenditures in providing medical support in the Alamo area.

The Fair Board Fund is used to account for revenues and expenditures of the fairground.

The Multi-Species Habitat and Multi-Species Habitat Section 7 Funds are used to minimize, monitor, and mitigate the effects of the disruption and taking of habitats of endangered species within Lincoln County.

The Youth Activities Counsel Fund is used to account for funds for youth community support.

The Genetic Marker Testing Fund is used to account for revenues and expenditures related to genetic marker analysis.

The Public Improvement Fund is used to account for revenues and expenditures for the improvement of County properties.

The Airport Fund is used to account for revenues and expenditures for airport operations.

The Panaca Town Building Fund is used to account for revenues and expenditures of the Town.

The Court Facility Fees and District Court Specialty Court Funds are used to account for revenues and expenditures of the court.

The Tri County Weed Control Fund is used to account for revenues and expenditures of Nye, Lincoln, and White Pine Counties' weed control activities.

The Lincoln County Land Act Funds are used to account for revenues received from land sales which are to be spent according to resolution specifications.

The Lincoln County Water Funds are used to account for revenues received for the County's portion of water sales which are to be spent according to resolution specifications.

The Lincoln County Water District Funds are used to account for revenues received from water sales which are to be spent according to resolution specifications. The Lincoln County Water District is a blended component unit of the government.

The Assessor Technology Fund is used to account for fees collected and used to enhance records maintenance in the County Assessor's office.

The District Court Technology Fund is used to account for fees collected and used to enhance records maintenance in the Court's office.

The Court Security Fund is used to account for fees collected and used to enhance security in the Court's office.

The District Court Enrichment Fund is used to account for fees collected and used to enrich the Court's office.

The Demerit Point Reduction Fund is used to account for fees to reduce points from traffic citations and used to fund specialty court programs or pay for court IT upgrades.

The Property Management Fund is used to account for the maintenance activities of real estate of the County that is rented for public use.

LINCOLN COUNTY, NEVADA
NONMAJOR SPECIAL REVENUE FUNDS
COMBINING BALANCE SHEET
June 30, 2020
(With Comparative Totals for June 30, 2019)

	Pioche Town	Alamo Town	Panaca Town	Federal In Lieu Tax	Resource Development Authority	County Library	Museum	Senior Nutrition	Transportation	Agricultural Extension	Indigent	Medical Indigent
ASSETS												
Pooled cash and investments	$ 230,074	$ 87,821	$ 21,212	$ 2,044,054	$ 85,249	$ 69,766	$ 86,180	$ 101,505	$ 200,082	$ 28,053	$ 364,791	$ 517,096
Interest receivable	354	153	35	6,699	-	-	-	-	-	-	-	817
Taxes receivable	1,493	1,128	394	-	-	1,298	659	1,596	-	311	1,117	2,491
Due from other governments	10,714	4,449	8,050	10,309	-	-	-	15,257	9,825	-	-	-
Due from others	-	-	-	-	-	-	-	-	-	-	-	-
Inventory	-	-	-	-	-	-	-	-	-	-	-	-
Prepaid expense	-	-	-	-	-	-	-	-	-	-	-	-
Interfund receivable	-	-	-	-	-	-	-	-	-	-	-	-
Total assets	$ 242,635	$ 93,551	$ 29,691	$ 2,061,062	$ 85,249	$ 71,064	$ 86,839	$ 118,358	$ 209,907	$ 28,364	$ 365,908	$ 520,404
LIABILITIES												
Accounts payable	$ 2,969	$ 6,365	$ 2,608	$ 27,155	$ 2,659	$ 1,277	$ 785	$ 9,828	$ 956	$ 1,810	$ 11,442	$ 79,986
Accrued payroll and benefits	2,902	347	123	-	-	3,665	1,431	6,331	4,567	602	3,496	-
Unearned revenue	-	-	-	-	82,590	-	-	-	-	-	-	-
Total liabilities	5,871	6,712	2,731	27,155	85,249	4,942	2,216	16,159	5,523	2,412	14,938	79,986
DEFERRED INFLOWS OF RESOURCES												
Unavailable revenue - property taxes	1,493	1,001	375	-	-	1,132	575	1,394	-	272	977	2,177
FUND BALANCE												
Nonspendable	-	-	-	-	-	-	-	-	-	-	-	-
Restricted for:												
Unincorporated towns	235,271	85,838	26,585	-	-	-	-	-	-	-	-	-
Multi-species conservation	-	-	-	-	-	-	-	-	-	-	-	-
General government	-	-	-	-	-	-	-	-	-	-	-	-
Public safety	-	-	-	-	-	-	-	-	-	-	-	-
Judicial	-	-	-	-	-	-	-	-	-	-	-	-
Public works	-	-	-	-	-	-	-	-	-	-	-	-
Health	-	-	-	-	-	-	-	-	-	-	-	-
Welfare	-	-	-	-	-	-	-	100,805	-	-	349,993	438,241
Culture and recreation	-	-	-	-	-	64,990	84,048	-	-	-	-	-
Community support	-	-	-	-	-	-	-	-	204,384	25,680	-	-
Intergovernmental	-	-	-	-	-	-	-	-	-	-	-	-
Committed for:												
Land act	-	-	-	-	-	-	-	-	-	-	-	-
Water	-	-	-	-	-	-	-	-	-	-	-	-
Lincoln County Water District	-	-	-	-	-	-	-	-	-	-	-	-
General government	-	-	-	2,033,907	-	-	-	-	-	-	-	-
Public works	-	-	-	-	-	-	-	-	-	-	-	-
Health	-	-	-	-	-	-	-	-	-	-	-	-
Unassigned	-	-	-	-	-	-	-	-	-	-	-	-
Total fund balance	235,271	85,838	26,585	2,033,907	-	64,990	84,048	100,805	204,384	25,680	349,993	438,241
Total liabilities, deferred inflows of resources, and fund balance	$ 242,635	$ 93,551	$ 29,691	$ 2,061,062	$ 85,249	$ 71,064	$ 86,839	$ 118,358	$ 209,907	$ 28,364	$ 365,908	$ 520,404

LINCOLN COUNTY, NEVADA
NONMAJOR SPECIAL REVENUE FUNDS
COMBINING BALANCE SHEET
June 30, 2020
(With Comparative Totals for June 30, 2019)

	China Springs	Ambulance	Regional Streets and Highways	Room Tax	Legal Aid Services	Forensic Services	Administrative Assessment	Forfeiture	Recorder Technology	L. C. Housing Authority
ASSETS										
Pooled cash and investments	$ 3,579	$ 29,170	$ 755,110	$ 98,711	$ (3,195)	$ 5,751	$ 111,115	$ 48,619	$ 32,586	$ 23,371
Interest receivable	-	56	2,957	-	-	-	183	65	50	36
Taxes receivable	131	-	-	7,746	-	-	-	-	-	-
Due from other governments	-	-	23,860	-	-	-	-	-	-	-
Due from others	-	10,230	-	-	-	-	-	-	-	-
Inventory	-	-	-	-	-	-	-	-	-	-
Prepaid expense	-	-	-	-	-	-	-	-	-	-
Interfund receivable	-	-	-	-	-	-	-	-	-	-
Total assets	$ 3,710	$ 39,456	$ 781,927	$ 106,457	$ (3,195)	$ 5,751	$ 111,298	$ 48,684	$ 32,636	$ 23,407
LIABILITIES										
Accounts payable	$ -	$ 3,672	$ 235	$ 10,895	$ -	$ 577	$ 972	$ 2,568	$ -	$ 1,055
Accrued payroll and benefits	-	2,213	-	370	-	-	-	-	-	148
Unearned revenue	-	-	-	-	-	-	-	-	-	-
Total liabilities	-	5,885	235	11,265	-	577	972	2,568	-	1,203
DEFERRED INFLOWS OF RESOURCES										
Unavailable revenue - property taxes	113	-	-	-	-	-	-	-	-	-
FUND BALANCE										
Nonspendable	-	-	-	-	-	-	-	-	-	-
Restricted for:										
Unincorporated towns	-	-	-	-	-	-	-	-	-	-
Multi-species conservation	-	-	-	-	-	-	-	-	-	-
General government	-	-	-	-	-	-	-	-	32,636	-
Public safety	-	-	-	-	-	5,174	-	46,116	-	-
Judicial	-	-	-	-	-	-	110,326	-	-	-
Public works	-	-	781,692	-	-	-	-	-	-	-
Health	-	-	-	-	-	-	-	-	-	-
Welfare	-	-	-	-	-	-	-	-	-	-
Culture and recreation	-	-	-	95,192	-	-	-	-	-	-
Community support	-	-	-	-	-	-	-	-	-	22,204
Intergovernmental	3,597	-	-	-	-	-	-	-	-	-
Committed for:										
Land act	-	-	-	-	-	-	-	-	-	-
Water	-	-	-	-	-	-	-	-	-	-
Lincoln County Water District	-	-	-	-	-	-	-	-	-	-
General government	-	-	-	-	-	-	-	-	-	-
Public works	-	-	-	-	-	-	-	-	-	-
Health	-	33,571	-	-	-	-	-	-	-	-
Unassigned	-	-	-	-	(3,195)	-	-	-	-	-
Total fund balance	3,597	33,571	781,692	95,192	(3,195)	5,174	110,326	46,116	32,636	22,204
Total liabilities, deferred inflows of resources, and fund balance	$ 3,710	$ 39,456	$ 781,927	$ 106,457	$ (3,195)	$ 5,751	$ 111,298	$ 48,684	$ 32,636	$ 23,407

LINCOLN COUNTY, NEVADA
NONMAJOR SPECIAL REVENUE FUNDS
COMBINING BALANCE SHEET
June 30, 2020
(With Comparative Totals for June 30, 2019)

	Alamo Clinic	Fair Board	Multi-Species Habitat Conservation	Multi-Species Habitat Conservation Section 7	Youth Activities Counsel	Genetic Marker Testing	Public Improvement	Airport	Panaca Town Building	Court Facility Fees	Tri County Weed Control
ASSETS											
Pooled cash and investments	$ 378	$ 24,186	$ 13,837	$ 902,339	$ 6,007	$ 1,370	$ 149,107	$ 23,165	$ 57,520	$ 135,935	$ -
Interest receivable	-	23	24	1,461	-	-	241	-	89	224	-
Taxes receivable	1,321	-	-	-	-	-	-	-	-	-	-
Due from other governments	-	-	-	-	-	-	-	-	-	-	-
Due from others	-	-	-	-	-	-	-	9,898	-	-	-
Inventory	-	-	-	-	-	-	-	8,091	-	-	-
Prepaid expense	-	-	-	-	-	-	-	-	-	-	-
Interfund receivable	-	-	-	-	-	-	-	-	-	-	-
Total assets	$ 1,699	$ 24,209	$ 13,861	$ 903,800	$ 6,007	$ 1,370	$ 149,348	$ 41,154	$ 57,609	$ 136,159	$ -
LIABILITIES											
Accounts payable	$ 378	$ 488	$ 621	$ -	$ -	$ 1,370	$ -	$ 9,608	$ -	$ 45,191	$ -
Accrued payroll and benefits	-	-	-	-	-	-	-	73	-	-	-
Unearned revenue	-	-	13,240	-	-	-	-	-	-	-	-
Total liabilities	378	488	13,861	-	-	1,370	-	9,681	-	45,191	-
DEFERRED INFLOWS OF RESOURCES											
Unavailable revenue - property taxes	1,154	-	-	-	-	-	-	-	-	-	-
FUND BALANCE											
Nonspendable	-	-	-	-	-	-	-	8,091	-	-	-
Restricted for:											
Unincorporated towns	-	-	-	-	-	-	-	-	-	-	-
Multi-species conservation	-	-	-	903,800	-	-	-	-	-	-	-
General government	-	-	-	-	-	-	-	-	-	-	-
Public safety	-	-	-	-	-	-	-	-	-	-	-
Judicial	-	-	-	-	-	-	-	-	-	90,968	-
Public works	-	-	-	-	-	-	149,348	-	-	-	-
Health	167	-	-	-	-	-	-	-	-	-	-
Welfare	-	-	-	-	-	-	-	-	-	-	-
Culture and recreation	-	23,721	-	-	-	-	-	-	-	-	-
Community support	-	-	-	-	6,007	-	-	-	-	-	-
Intergovernmental	-	-	-	-	-	-	-	-	-	-	-
Committed for:											
Land act	-	-	-	-	-	-	-	-	-	-	-
Water	-	-	-	-	-	-	-	-	-	-	-
Lincoln County Water District	-	-	-	-	-	-	-	-	-	-	-
General government	-	-	-	-	-	-	-	-	57,609	-	-
Public works	-	-	-	-	-	-	-	23,382	-	-	-
Health	-	-	-	-	-	-	-	-	-	-	-
Unassigned	-	-	-	-	-	-	-	-	-	-	-
Total fund balance	167	23,721	-	903,800	6,007	-	149,348	31,473	57,609	90,968	-
Total liabilities, deferred inflows of resources, and fund balance	$ 1,699	$ 24,209	$ 13,861	$ 903,800	$ 6,007	$ 1,370	$ 149,348	$ 41,154	$ 57,609	$ 136,159	$ -

LINCOLN COUNTY, NEVADA
NONMAJOR SPECIAL REVENUE FUNDS
COMBINING BALANCE SHEET
June 30, 2020
(With Comparative Totals for June 30, 2019)

	Lincoln County Land Act General	Lincoln County Land Act Planning and Development	Lincoln County Land Act Education	Lincoln County Land Act Grant Match	Lincoln County Water General	Lincoln County Water Special Projects	Lincoln County Water Planning and Development	Lincoln County Water Special Use	Lincoln County Water Grant Match	Lincoln County Water District General	Lincoln County Water District Plan & Dev
ASSETS											
Pooled cash and investments	$ 6,879	$ 700	$ 130,510	$ -	$ 633	$ 8,783	$ 87,123	$ 1,239,861	$ 87,057	$ 326,139	$ 948,216
Interest receivable	11	1	211	-	1	14	141	2,006	141	1,067	3,920
Taxes receivable	-	-	-	-	-	-	-	-	-	-	-
Due from other governments	-	-	-	-	-	-	-	-	-	-	-
Due from others	-	-	-	-	-	-	-	-	-	-	-
Inventory	-	-	-	-	-	-	-	-	-	-	-
Prepaid expense	-	-	-	-	-	-	-	-	-	1,554	-
Interfund receivable	-	-	-	-	-	-	-	170,000	-	-	-
Total assets	$ 6,890	$ 701	$ 130,721	$ -	$ 634	$ 8,797	$ 87,264	$ 1,411,867	$ 87,198	$ 328,760	$ 952,136
LIABILITIES											
Accounts payable	$ -	$ -	$ -	$ -	$ -	$ -	$ -	$ -	$ -	$ 5,361	$ -
Accrued payroll and benefits	-	-	-	-	-	-	-	-	-	6,766	-
Unearned revenue	-	-	-	-	-	-	-	-	-	-	-
Total liabilities	-	-	-	-	-	-	-	-	-	12,127	-
DEFERRED INFLOWS OF RESOURCES											
Unavailable revenue - property taxes	-	-	-	-	-	-	-	-	-	-	-
FUND BALANCE											
Nonspendable	-	-	-	-	-	-	-	-	-	-	-
Restricted for:											
Unincorporated towns	-	-	-	-	-	-	-	-	-	-	-
Multi-species conservation	-	-	-	-	-	-	-	-	-	-	-
General government	-	-	-	-	-	-	-	-	-	-	-
Public safety	-	-	-	-	-	-	-	-	-	-	-
Judicial	-	-	-	-	-	-	-	-	-	-	-
Public works	-	-	-	-	-	-	-	-	-	-	-
Health	-	-	-	-	-	-	-	-	-	-	-
Welfare	-	-	-	-	-	-	-	-	-	-	-
Culture and recreation	-	-	-	-	-	-	-	-	-	-	-
Community support	-	-	-	-	-	-	-	-	-	-	-
Intergovernmental	-	-	-	-	-	-	-	-	-		
Committed for:											
Land act	6,890	701	130,721	-	-	-	-	-	-	-	-
Water	-	-	-	-	634	8,797	87,264	1,411,867	87,198	316,633	952,136
Lincoln County Water District	-	-	-	-	-	-	-	-	-	-	-
General government	-	-	-	-	-	-	-	-	-	-	-
Public works	-	-	-	-	-	-	-	-	-	-	-
Health	-	-	-	-	-	-	-	-	-	-	-
Unassigned	-	-	-	-	-	-	-	-	-	-	-
Total fund balance	6,890	701	130,721	-	634	8,797	87,264	1,411,867	87,198	316,633	952,136
Total liabilities, deferred inflows of resources, and fund balance	$ 6,890	$ 701	$ 130,721	$ -	$ 634	$ 8,797	$ 87,264	$ 1,411,867	$ 87,198	$ 328,760	$ 952,136

LINCOLN COUNTY, NEVADA
NONMAJOR SPECIAL REVENUE FUNDS
COMBINING BALANCE SHEET
June 30, 2020
(With Comparative Totals for June 30, 2019)

	Lincoln County Water District Special Proj.	Assessor Technology	District Court Technology	District Court Specialty Court	Court Security	District Court Enrichment	Demerit Point Reduction	Property Management	Totals 2020	Totals 2019
ASSETS										
Pooled cash and investments	$ 698,566	$ 38,983	$ 5,120	$ 9,902	$ 12,436	$ 57,383	$ 1,837	$ 81,586	$ 9,996,258	$ 9,734,251
Interest receivable	2,813	-	-	-	20	91	-	-	23,904	22,403
Taxes receivable	-	-	-	-	-	-	-	-	19,685	21,286
Due from other governments	-	-	-	-	-	-	-	-	82,464	89,160
Due from others	-	-	-	-	-	-	-	-	20,128	-
Inventory	-	-	-	-	-	-	-	-	8,091	-
Prepaid expense	32,000	-	-	-	-	-	-	-	33,554	40,000
Interfund receivable	-	-	-	-	-	-	-	-	170,000	180,000
Total assets	$ 733,379	$ 38,983	$ 5,120	$ 9,902	$ 12,456	$ 57,474	$ 1,837	$ 81,586	$ 10,354,084	$ 10,087,100
LIABILITIES										
Accounts payable	$ -	$ -	$ -	$ 1,177	$ -	$ -	$ -	$ 5,787	$ 237,795	$ 214,573
Accrued payroll and benefits	-	-	-	-	-	-	-	371	33,405	55,090
Unearned revenue	-	-	-	-	-	-	-	-	95,830	94,601
Total liabilities	-	-	-	1,177	-	-	-	6,158	367,030	364,264
DEFERRED INFLOWS OF RESOURCES										
Unavailable revenue - property taxes	-	-	-	-	-	-	-	-	10,663	9,783
FUND BALANCE										
Nonspendable	32,000	-	-	-	-	-	-	-	40,091	40,000
Restricted for:										
Unincorporated towns	-	-	-	-	-	-	-	-	347,694	280,019
Multi-species conservation	-	-	-	-	-	-	-	-	903,800	879,908
General government	-	38,983	-	-	-	-	-	-	71,619	230,811
Public safety	-	-	-	-	-	-	-	-	51,290	59,838
Judicial	-	-	5,120	8,725	12,456	57,474	1,837	-	286,906	289,494
Public works	-	-	-	-	-	-	-	-	931,040	815,674
Health	-	-	-	-	-	-	-	-	167	496
Welfare	-	-	-	-	-	-	-	-	889,039	814,730
Culture and recreation	-	-	-	-	-	-	-	-	267,951	244,626
Community support	-	-	-	-	-	-	-	-	258,275	228,857
Intergovernmental	-	-	-	-	-	-	-	-	3,597	1,454
Committed for:										
Land act	-	-	-	-	-	-	-	-	138,312	134,807
Water	-	-	-	-	-	-	-	-	2,864,529	2,746,544
Lincoln County Water District	701,379	-	-	-	-	-	-	-	701,379	668,869
General government	-	-	-	-	-	-	-	75,428	2,166,944	2,252,929
Public works	-	-	-	-	-	-	-	-	23,382	522
Health	-	-	-	-	-	-	-	-	33,571	23,668
Unassigned	-	-	-	-	-	-	-	-	(3,195)	(193)
Total fund balance	733,379	38,983	5,120	8,725	12,456	57,474	1,837	75,428	9,976,391	9,713,053
Total liabilities, deferred inflows of resources, and fund balance	$ 733,379	$ 38,983	$ 5,120	$ 9,902	$ 12,456	$ 57,474	$ 1,837	$ 81,586	$ 10,354,084	$ 10,087,100

LINCOLN COUNTY, NEVADA
NONMAJOR SPECIAL REVENUE FUNDS
COMBINING SCHEDULE OF REVENUES, EXPENDITURES,
AND CHANGES IN FUND BALANCES
Year Ended June 30, 2020
(With Comparative Totals for Year Ended June 30, 2019)

	Pioche Town	Alamo Town	Panaca Town	Federal In Lieu Tax	Resource Development Authority	County Library	Museum	Senior Nutrition	Transportation	Agricultural Extension	Indigent	Medical Indigent
Revenues:												
Taxes	$ 57,478	$ 57,102	$ 12,858	$ -	$ -	$ 97,898	$ 49,903	$ 119,868	$ -	$ 23,285	$ 83,592	$ 186,277
Licenses and permits	4,855	-	-	-	-	-	-	-	-	-	-	-
Intergovernmental	58,178	24,178	43,697	974,644	67,169	93	47	138,220	94,589	22	78	175
Charges for services	-	-	-	-	-	-	-	21,891	3,091	-	-	-
Fines and forfeitures	-	-	-	-	-	-	-	-	-	-	-	-
Miscellaneous	10,685	7,793	772	55,752	1,000	160	3,297	2,375	-	-	-	13,367
Total revenues	131,196	89,073	57,327	1,030,396	68,169	98,151	53,247	282,354	97,680	23,307	83,670	199,819
Expenditures:												
General government	9,196	18,387	2,802	699,643	-	-	-	-	-	-	-	-
Public safety	-	-	-	99	-	-	-	-	-	-	-	-
Judicial	-	-	-	-	-	-	-	-	-	-	-	-
Public works	19,781	5,939	17,312	-	-	-	-	-	-	-	-	-
Health	6,489	-	11,194	-	-	-	-	-	-	-	-	-
Welfare	-	-	-	-	-	-	-	271,345	-	-	93,799	159,698
Culture and recreation	40,418	57,112	21,291	-	-	92,113	37,091	-	-	-	-	-
Community support	-	-	-	16,720	68,169	-	-	-	103,904	25,055	-	-
Intergovernmental	-	-	-	95,771	-	-	-	-	-	-	-	-
Debt service:												
Principal	-	-	-	24,157	-	-	-	-	-	-	-	-
Interest	-	-	-	1,784	-	-	-	-	-	-	-	-
Total expenditures	75,884	81,438	52,599	838,174	68,169	92,113	37,091	271,345	103,904	25,055	93,799	159,698
Excess (deficiency) of revenues over expenditures	55,312	7,635	4,728	192,222	-	6,038	16,156	11,009	(6,224)	(1,748)	(10,129)	40,121
Other financing sources (uses):												
Operating transfers in	-	-	-	-	-	-	-	33,308	35,000	-	-	-
Operating transfers out	-	-	-	(287,143)	-	-	-	-	-	-	-	-
Total other financing sources (uses)	-	-	-	(287,143)	-	-	-	33,308	35,000	-	-	-
Net change in fund balance before special items	55,312	7,635	4,728	(94,921)	-	6,038	16,156	44,317	28,776	(1,748)	(10,129)	40,121
Special items:												
Disposal of Tri-County Weed Control	-	-	-	-	-	-	-	-	-	-	-	-
Net change in fund balance	55,312	7,635	4,728	(94,921)	-	6,038	16,156	44,317	28,776	(1,748)	(10,129)	40,121
Fund balance:												
Beginning of year	179,959	78,203	21,857	2,128,828	-	58,952	67,892	56,488	175,608	27,428	360,122	398,120
End of year	$ 235,271	$ 85,838	$ 26,585	$ 2,033,907	$ -	$ 64,990	$ 84,048	$ 100,805	$ 204,384	$ 25,680	$ 349,993	$ 438,241

LINCOLN COUNTY, NEVADA
NONMAJOR SPECIAL REVENUE FUNDS
COMBINING SCHEDULE OF REVENUES, EXPENDITURES,
AND CHANGES IN FUND BALANCES
Year Ended June 30, 2020
(With Comparative Totals for Year Ended June 30, 2019)

	China Springs	Ambulance	Regional Streets and Highways	Room Tax	Legal Aid Services	Forensic Services	Administrative Assessment	Forfeiture	Recorder Technology	L. C. Housing Authority	Alamo Clinic
Revenues:											
Taxes	$ 9,779	$ -	$ -	$ 70,479	$ -	$ -	$ -	$ -	$ -	$ -	$ 98,959
Licenses and permits	-	-	-	-	-	-	-	-	-	-	-
Intergovernmental	9	10,231	123,268	-	-	-	-	27,052	-	-	93
Charges for services	-	134,391	-	-	1,652	1,977	-	-	8,325	-	-
Fines and forfeitures	-	-	-	-	-	-	30,503	-	-	-	-
Miscellaneous	-	921	25,044	-	-	-	2,971	2,259	821	35,571	-
Total revenues	9,788	145,543	148,312	70,479	1,652	1,977	33,474	29,311	9,146	35,571	99,052
Expenditures:											
General government	-	-	-	-	-	-	-	-	-	-	-
Public safety	-	-	-	-	-	5,306	-	34,530	-	-	-
Judicial	-	-	-	-	4,654	-	34,265	-	-	-	-
Public works	-	-	1,894	-	-	-	-	-	-	-	-
Health	-	135,640	-	-	-	-	-	-	-	-	99,381
Welfare	-	-	-	-	-	-	-	-	-	-	-
Culture and recreation	-	-	-	57,543	-	-	-	-	-	-	-
Community support	-	-	-	-	-	-	-	-	-	33,181	-
Intergovernmental	17,645	-	-	5,728	-	-	-	-	-	-	-
Debt service:											
Principal	-	-	-	-	-	-	-	-	-	-	-
Interest	-	-	-	-	-	-	-	-	-	-	-
Total expenditures	17,645	135,640	1,894	63,271	4,654	5,306	34,265	34,530	-	33,181	99,381
Excess (deficiency) of revenues over expenditures	(7,857)	9,903	146,418	7,208	(3,002)	(3,329)	(791)	(5,219)	9,146	2,390	(329)
Other financing sources (uses):											
Operating transfers in	10,000	-	-	-	-	-	-	-	-	-	-
Operating transfers out	-	-	(35,000)	(10,000)	-	-	-	-	-	-	-
Total other financing sources (uses)	10,000	-	(35,000)	(10,000)	-	-	-	-	-	-	-
Net change in fund balance before special items	2,143	9,903	111,418	(2,792)	(3,002)	(3,329)	(791)	(5,219)	9,146	2,390	(329)
Special items:											
Disposal of Tri-County Weed Control	-	-	-	-	-	-	-	-	-	-	-
Net change in fund balance	2,143	9,903	111,418	(2,792)	(3,002)	(3,329)	(791)	(5,219)	9,146	2,390	(329)
Fund balance:											
Beginning of year	1,454	23,668	670,274	97,984	(193)	8,503	111,117	51,335	23,490	19,814	496
End of year	$ 3,597	$ 33,571	$ 781,692	$ 95,192	$ (3,195)	$ 5,174	$ 110,326	$ 46,116	$ 32,636	$ 22,204	$ 167

LINCOLN COUNTY, NEVADA
NONMAJOR SPECIAL REVENUE FUNDS
COMBINING SCHEDULE OF REVENUES, EXPENDITURES,
AND CHANGES IN FUND BALANCES
Year Ended June 30, 2020
(With Comparative Totals for Year Ended June 30, 2019)

	Fair Board	Multi-Species Habitat Conservation	Multi-Species Habitat Conservation Section 7	Youth Activities Counsel	Genetic Marker Testing	Public Improvement	Airport	Panaca Town Building	Court Facility Fees	Tri County Weed Control	Lincoln County Land Act General
Revenues:											
Taxes	$ -	$ -	$ -	$ -	$ -	$ -	$ -	$ -	$ -	$ -	$ -
Licenses and permits	-	-	-	-	-	-	-	-	-	-	-
Intergovernmental	-	3,087	-	-	-	-	-	-	-	-	-
Charges for services	-	-	-	-	10,372	-	40,853	-	33,511	327,615	-
Fines and forfeitures	-	-	-	-	-	-	-	-	-	-	-
Miscellaneous	33,746	393	23,892	-	-	3,948	20,400	12,028	3,653	879	182
Total revenues	33,746	3,480	23,892	-	10,372	3,948	61,253	12,028	37,164	328,494	182
Expenditures:											
General government	-	3,480	-	-	10,372	-	-	10,800	-	186,640	-
Public safety	-	-	-	-	-	-	-	-	-	-	-
Judicial	-	-	-	-	-	-	-	-	57,876	-	-
Public works	-	-	-	-	-	-	30,302	-	-	-	-
Health	-	-	-	-	-	-	-	-	-	-	-
Welfare	-	-	-	-	-	-	-	-	-	-	-
Culture and recreation	39,823	-	-	-	-	-	-	-	-	-	-
Community support	-	-	-	-	-	-	-	-	-	-	-
Intergovernmental	-	-	-	-	-	-	-	-	-	-	-
Debt service:											
Principal	-	-	-	-	-	-	-	-	-	-	-
Interest	-	-	-	-	-	-	-	-	-	-	-
Total expenditures	39,823	3,480	-	-	10,372	-	30,302	10,800	57,876	186,640	-
Excess (deficiency) of revenues over expenditures	(6,077)	-	23,892	-	-	3,948	30,951	1,228	(20,712)	141,854	182
Other financing sources (uses):											
Operating transfers in	10,000	-	-	-	-	-	-	-	-	-	-
Operating transfers out	-	-	-	-	-	-	-	-	-	-	-
Total other financing sources (uses)	10,000	-	-	-	-	-	-	-	-	-	-
Net change in fund balance before special items	3,923	-	23,892	-	-	3,948	30,951	1,228	(20,712)	141,854	182
Special items:											
Disposal of Tri-County Weed Control	-	-	-	-	-	-	-	-	-	(313,853)	-
Net change in fund balance	3,923	-	23,892	-	-	3,948	30,951	1,228	(20,712)	(171,999)	182
Fund balance:											
Beginning of year	19,798	-	879,908	6,007	-	145,400	522	56,381	111,680	171,999	6,708
End of year	$ 23,721	$ -	$ 903,800	$ 6,007	$ -	$ 149,348	$ 31,473	$ 57,609	$ 90,968	$ -	$ 6,890

LINCOLN COUNTY, NEVADA
NONMAJOR SPECIAL REVENUE FUNDS
COMBINING SCHEDULE OF REVENUES, EXPENDITURES,
AND CHANGES IN FUND BALANCE
Year Ended June 30, 2020
(With Comparative Totals for Year Ended June 30, 2019)

	Lincoln County Land Act Planning and Development	Lincoln County Land Act Education	Lincoln County Land Act Grant Match	Lincoln County Water General	Lincoln County Water Special Projects	Lincoln County Water Planning and Development	Lincoln County Water Special Use	Lincoln County Water Grant Match	Lincoln County Water District General	Lincoln County Water District Plan & Dev	Lincoln County Water District Special Proj.
Revenues:											
Taxes	$ -	$ -	$ -	$ -	$ -	$ -	$ -	$ -	$ -	$ -	$ -
Licenses and permits	-	-	-	-	-	-	-	-	-	-	-
Intergovernmental	-	-	-	-	-	-	-	-	-	-	-
Charges for services	-	-	-	-	-	-	-	-	-	-	-
Fines and forfeitures	-	-	-	-	-	-	-	-	-	-	-
Miscellaneous	18	3,456	-	16	232	2,307	32,809	2,305	12,838	45,303	32,510
Total revenues	18	3,456	-	16	232	2,307	32,809	2,305	12,838	45,303	32,510
Expenditures:											
General government	-	-	-	-	-	-	-	-	177,825	-	8,000
Public safety	-	-	-	-	-	-	-	-	-	-	-
Judicial	-	-	-	-	-	-	-	-	-	-	-
Public works	-	-	-	-	-	-	-	-	-	-	-
Health	-	-	-	-	-	-	-	-	-	-	-
Welfare	-	-	-	-	-	-	-	-	-	-	-
Culture and recreation	-	-	-	-	-	-	-	-	-	-	-
Community support	-	-	-	-	-	-	-	-	-	-	-
Intergovernmental	-	-	-	-	-	-	-	-	-	-	-
Debt service											
Principal	-	-	-	-	-	-	-	-	-	-	-
Interest	-	-	-	-	-	-	-	-	-	-	-
Total expenditures	-	-	-	-	-	-	-	-	177,825	-	8,000
Excess (deficiency) of revenues over expenditures	18	3,456	-	16	232	2,307	32,809	2,305	(164,987)	45,303	24,510
Other financing sources (uses):											
Operating transfers in	-	-	-	-	-	-	-	-	200,000	-	-
Operating transfers out	-	-	(151)	-	-	-	-	-	-	-	-
Total other financing sources (uses)	-	-	(151)	-	-	-	-	-	200,000	-	-
Net change in fund balance before special items	18	3,456	(151)	16	232	2,307	32,809	2,305	35,013	45,303	24,510
Special items:											
Disposal of Tri-County Weed Control	-	-	-	-	-	-	-	-	-	-	-
Net change in fund balance	18	3,456	(151)	16	232	2,307	32,809	2,305	35,013	45,303	24,510
Fund balance:											
Beginning of year	683	127,265	151	618	8,565	84,957	1,379,058	84,893	281,620	906,833	708,869
End of year	$ 701	$ 130,721	$ -	$ 634	$ 8,797	$ 87,264	$ 1,411,867	$ 87,198	$ 316,633	$ 952,136	$ 733,379

LINCOLN COUNTY, NEVADA
NONMAJOR SPECIAL REVENUE FUNDS
COMBINING SCHEDULE OF REVENUES, EXPENDITURES,
AND CHANGES IN FUND BALANCE
Year Ended June 30, 2020
(With Comparative Totals for Year Ended June 30, 2019)

	Assessor Technology	District Court Technology	District Court Specialty Court	Court Security	District Court Enrichment	Demerit Point Reduction	Property Management	Totals 2020	Totals 2019
Revenues:									
Taxes	$ -	$ -	$ -	$ -	$ -	$ -	$ -	$ 867,478	$ 853,161
Licenses and permits	-	-	-	-	-	-	-	4,855	3,960
Intergovernmental	-	-	-	-	-	-	-	1,564,830	1,513,659
Charges for services	13,661	-	9,686	1,120	5,508	1,837	-	615,490	1,119,708
Fines and forfeitures	-	-	-	-	-	-	-	30,503	44,819
Miscellaneous	-	-	-	323	1,491	-	14,200	409,717	315,742
Total revenues	13,661	-	9,686	1,443	6,999	1,837	14,200	3,492,873	3,851,049
Expenditures:									
General government	10,000	-	-	-	-	-	46,492	1,183,637	1,688,640
Public safety	-	-	-	-	-	-	-	39,935	62,102
Judicial	-	-	16,050	-	-	-	-	112,845	61,694
Public works	-	-	-	-	-	-	-	75,228	95,383
Health	-	-	-	-	-	-	-	252,704	218,516
Welfare	-	-	-	-	-	-	-	524,842	564,610
Culture and recreation	-	-	-	-	-	-	-	345,391	335,923
Community support	-	-	-	-	-	-	-	247,029	246,153
Intergovernmental	-	-	-	-	-	-	-	119,144	107,939
Debt service:									
Principal	-	-	-	-	-	-	-	24,157	50,641
Interest	-	-	-	-	-	-	-	1,784	1,935
Total expenditures	10,000	-	16,050	-	-	-	46,492	2,926,696	3,433,536
Excess (deficiency) of revenues over expenditures	3,661	-	(6,364)	1,443	6,999	1,837	(32,292)	566,177	417,513
Other financing sources (uses):									
Operating transfers in	-	-	15,000	-	-	-	40,000	343,308	101,996
Operating transfers out	-	-	-	-	-	-	-	(332,294)	(235,970)
Total other financing sources (uses)	-	-	15,000	-	-	-	40,000	11,014	(133,974)
Net change in fund balance before special items	3,661	-	8,636	1,443	6,999	1,837	7,708	577,191	283,539
Special items:									
Disposal of Tri-County Weed Control	-	-	-	-	-	-	-	(313,853)	-
Net change in fund balance	3,661	-	8,636	1,443	6,999	1,837	7,708	263,338	283,539
Fund balance:									
Beginning of year	35,322	5,120	89	11,013	50,475	-	67,720	9,713,053	9,429,514
End of year	$ 38,983	$ 5,120	$ 8,725	$ 12,456	$ 57,474	$ 1,837	$ 75,428	$ 9,976,391	$ 9,713,053

LINCOLN COUNTY, NEVADA
NONMAJOR PIOCHE TOWN SPECIAL REVENUE FUND
COMPARATIVE BALANCE SHEETS
June 30, 2020 and 2019

	2020	2019
ASSETS		
Pooled cash and investments	$ 230,074	$ 180,251
Interest receivable	354	367
Taxes receivable	1,493	1,126
Due from other governments	10,714	9,852
Total assets	$ 242,635	$ 191,596
LIABILITIES		
Accounts payable	$ 2,969	$ 6,802
Accrued payroll and benefits	2,902	3,715
Total liabilities	5,871	10,517
DEFERRED INFLOWS OF RESOURCES		
Unavailable revenue - property taxes	1,493	1,120
FUND BALANCE		
Restricted	235,271	179,959
Total liabilities, deferred inflows of resources, and fund balance	$ 242,635	$ 191,596

LINCOLN COUNTY, NEVADA
NONMAJOR PIOCHE TOWN SPECIAL REVENUE FUND
SCHEDULE OF REVENUES, EXPENDITURES, AND CHANGES IN FUND BALANCE - BUDGET (GAAP BASIS) AND ACTUAL
Year Ended June 30, 2020

(With Comparative Actual Amounts for Year Ended June 30, 2019)

	2020 Budget	2020 Actual	Variance - Positive (Negative)	2019 Actual
Revenues:				
Taxes:				
Property taxes	$ 58,227	$ 57,478	$ (749)	$ 56,891
Licenses and permits:				
Gaming licenses	2,500	2,955	455	3,060
Liquor licenses	1,300	1,900	600	900
Total licenses and permits	3,800	4,855	1,055	3,960
Intergovernmental:				
Consolidated tax	56,847	58,178	1,331	56,672
Miscellaneous:				
Investment income	-	5,793	5,793	3,234
Rent	5,870	4,892	(978)	7,793
Total miscellaneous	5,870	10,685	4,815	11,027
Total revenues	124,744	131,196	6,452	128,550
Expenditures:				
Current:				
General government:				
Other general expenses:				
Employee benefits	926	916	10	963
Services and supplies	37,393	8,280	29,113	6,262
Total general government	38,319	9,196	29,123	7,225
Public works:				
Highways and streets:				
Salaries and wages	10,397	5,384	5,013	7,642
Employee benefits	3,478	2,309	1,169	2,914
Services and supplies	14,114	12,088	2,026	14,572
Total public works	27,989	19,781	8,208	25,128
Health:				
Cemetery:				
Salaries and wages	4,871	3,364	1,507	1,129
Employee benefits	588	1,252	(664)	396
Services and supplies	2,709	1,873	836	1,828
Total health	$ 8,168	$ 6,489	$ 1,679	$ 3,353

LINCOLN COUNTY, NEVADA
NONMAJOR PIOCHE TOWN SPECIAL REVENUE FUND (Continued)
SCHEDULE OF REVENUES, EXPENDITURES, AND CHANGES
IN FUND BALANCE - BUDGET (GAAP BASIS) AND ACTUAL
Year Ended June 30, 2020

(With Comparative Actual Amounts for Year Ended June 30, 2019)

	2020 Budget	2020 Actual	Variance - Positive (Negative)	2019 Actual
Expenditures: (Continued)				
Culture and recreation:				
Parks:				
Salaries and wages	$ 7,724	$ 7,763	$ (39)	$ 7,638
Employee benefits	2,848	2,768	80	2,265
Services and supplies	23,053	14,854	8,199	14,647
Total parks	33,625	25,385	8,240	24,550
Swimming pool:				
Salaries and wages	5,883	4,651	1,232	8,677
Employee benefits	2,058	989	1,069	2,028
Services and supplies	6,552	5,966	586	9,200
Capital outlay	12,000	-	12,000	-
Total swimming pool	26,493	11,606	14,887	19,905
Town hall:				
Salaries and wages	1,068	1,387	(319)	802
Employee benefits	426	630	(204)	436
Services and supplies	4,146	1,410	2,736	3,738
Total town hall	5,640	3,427	2,213	4,976
Total culture and recreation	65,758	40,418	25,340	49,431
Contingency	4,207	-	4,207	-
Total expenditures	144,441	75,884	68,557	85,137
Excess (deficiency) of revenues over expenditures	(19,697)	55,312	75,009	43,413
Other financing sources (uses):				
Operating transfers out	(22,075)	-	22,075	-
Net change in fund balance	(41,772)	55,312	97,084	43,413
Fund balance:				
Beginning of year	140,512	179,959	39,447	136,546
End of year	$ 98,740	$ 235,271	$ 136,531	$ 179,959

LINCOLN COUNTY, NEVADA
NONMAJOR ALAMO TOWN SPECIAL REVENUE FUND
COMPARATIVE BALANCE SHEETS
June 30, 2020 and 2019

	2020	2019
ASSETS		
Pooled cash and investments	$ 87,821	$ 80,197
Interest receivable	153	134
Taxes receivable	1,128	597
Due from other governments	4,449	4,101
Total assets	$ 93,551	$ 85,029
LIABILITIES		
Accounts payable	$ 6,365	$ 5,655
Accrued payroll and benefits	347	573
Total liabilities	6,712	6,228
DEFERRED INFLOWS OF RESOURCES		
Unavailable revenue - property taxes	1,001	598
FUND BALANCE		
Restricted	85,838	78,203
Total liabilities, deferred inflows of resources, and fund balance	$ 93,551	$ 85,029

LINCOLN COUNTY, NEVADA
NONMAJOR ALAMO TOWN SPECIAL REVENUE FUND
SCHEDULE OF REVENUES, EXPENDITURES, AND CHANGES
IN FUND BALANCE - BUDGET (GAAP BASIS) AND ACTUAL
Year Ended June 30, 2020
(With Comparative Actual Amounts for Year Ended June 30, 2019)

	2020 Budget	2020 Actual	Variance - Positive (Negative)	2019 Actual
Revenues:				
Taxes:				
Property taxes	$ 57,373	$ 57,102	$ (271)	$ 54,656
Intergovernmental:				
Consolidated tax	23,603	24,178	575	23,547
Miscellaneous:				
Investment income	50	2,496	2,446	1,185
Other	4,000	5,297	1,297	6,084
Total miscellaneous	4,050	7,793	3,743	7,269
Total revenues	85,026	89,073	4,047	85,472
Expenditures:				
Current:				
General government:				
Salaries and wages	20,393	12,645	7,748	18,990
Employee benefits	3,107	792	2,315	2,405
Services and supplies	5,150	4,950	200	3,545
Total general government	28,650	18,387	10,263	24,940
Public works:				
Highways and streets:				
Services and supplies	5,600	5,939	(339)	418
Culture and recreation:				
P.V. senior center:				
Services and supplies	6,703	4,310	2,393	4,029
Parks:				
Services and supplies	53,297	52,802	495	47,018
Total culture and recreation	60,000	57,112	2,888	51,047
Total expenditures	$ 94,250	$ 81,438	$ 12,812	$ 76,405

LINCOLN COUNTY, NEVADA
NONMAJOR ALAMO TOWN SPECIAL REVENUE FUND (Continued)
SCHEDULE OF REVENUES, EXPENDITURES, AND CHANGES
IN FUND BALANCE - BUDGET (GAAP BASIS) AND ACTUAL
Year Ended June 30, 2020
(With Comparative Actual Amounts for Year Ended June 30, 2019)

	2020		Variance - Positive	2019
	Budget	Actual	(Negative)	Actual
Excess (deficiency) of revenues over expenditures	$ (9,224)	$ 7,635	$ 16,859	$ 9,067
Fund balance:				
Beginning of year	46,372	78,203	31,831	69,136
End of year	$ 37,148	$ 85,838	$ 48,690	$ 78,203

LINCOLN COUNTY, NEVADA
NONMAJOR PANACA TOWN SPECIAL REVENUE FUND
COMPARATIVE BALANCE SHEETS
June 30, 2020 and 2019

	2020	2019
ASSETS		
Pooled cash and investments	$ 21,212	$ 16,465
Interest receivable	35	31
Taxes receivable	394	307
Due from other governments	8,050	7,398
Total assets	$ 29,691	$ 24,201
LIABILITIES		
Accounts payable	$ 2,608	$ 1,895
Accrued payroll and benefits	123	189
Total liabilities	2,731	2,084
DEFERRED INFLOWS OF RESOURCES		
Unavailable revenue - property taxes	375	260
FUND BALANCE		
Restricted	26,585	21,857
Total liabilities, deferred inflows of resources, and fund balance	$ 29,691	$ 24,201

LINCOLN COUNTY, NEVADA
NONMAJOR PANACA TOWN SPECIAL REVENUE FUND
SCHEDULE OF REVENUES, EXPENDITURES, AND CHANGES
IN FUND BALANCE - BUDGET (GAAP BASIS) AND ACTUAL
Year Ended June 30, 2020

(With Comparative Actual Amounts for Year Ended June 30, 2019)

	2020 Budget	2020 Actual	Variance - Positive (Negative)	2019 Actual
Revenues:				
Taxes:				
Property taxes	$ 13,116	$ 12,858	$ (258)	$ 12,439
Intergovernmental:				
Consolidated tax	42,713	43,697	984	42,573
Miscellaneous:				
Investment income	-	573	573	274
Rent	750	150	(600)	475
Other	-	49	49	-
Total miscellaneous	750	772	22	749
Total revenues	56,579	57,327	748	55,761
Expenditures:				
Current:				
General government:				
Salaries and wages	-	45	(45)	-
Employee benefits	500	432	68	490
Services and supplies	2,350	2,325	25	2,168
Total general government	2,850	2,802	48	2,658
Public works:				
Highways and streets:				
Services and supplies	20,900	17,312	3,588	10,557
Health:				
Cemetery:				
Salaries and wages	9,915	9,600	315	9,600
Employee benefits	1,085	1,012	73	1,002
Services and supplies	550	582	(32)	481
Total health	$ 11,550	$ 11,194	$ 356	$ 11,083

LINCOLN COUNTY, NEVADA
NONMAJOR PANACA TOWN SPECIAL REVENUE FUND
SCHEDULE OF REVENUES, EXPENDITURES, AND CHANGES
IN FUND BALANCE - BUDGET (GAAP BASIS) AND ACTUAL
Year Ended June 30, 2020

(With Comparative Actual Amounts for Year Ended June 30, 2019)

	2020 Budget	2020 Actual	Variance - Positive (Negative)	2019 Actual
Expenditures continued:				
Culture and recreation:				
Parks:				
Services and supplies	$ 13,000	$ 10,872	$ 2,128	$ 12,811
Town hall:				
Salaries and wages	2,601	2,400	201	2,400
Employee benefits	199	184	15	184
Services and supplies	7,000	7,835	(835)	7,376
Total culture and recreation	22,800	21,291	1,509	22,771
Total expenditures	58,100	52,599	5,501	47,069
Excess (deficiency) of revenues over expenditures	(1,521)	4,728	6,249	8,692
Fund balance:				
Beginning of year	15,437	21,857	6,420	13,165
End of year	$ 13,916	$ 26,585	$ 12,669	$ 21,857

LINCOLN COUNTY, NEVADA
NONMAJOR FUND - FEDERAL IN LIEU TAX SPECIAL REVENUE FUND (012)
COMPARATIVE BALANCE SHEETS
June 30, 2020 and 2019

	2020	2019
ASSETS		
Pooled cash and investments	$ 2,044,054	$ 2,149,537
Interest receivable	6,699	4,751
Due from other governments	10,309	-
Total assets	$ 2,061,062	$ 2,154,288
LIABILITIES		
Accounts payable	$ 27,155	$ 25,460
FUND BALANCE		
Committed	2,033,907	2,128,828
Total liabilities and fund balance	$ 2,061,062	$ 2,154,288

LINCOLN COUNTY, NEVADA
NONMAJOR FUND - FEDERAL IN LIEU TAX SPECIAL REVENUE FUND (012)
SCHEDULE OF REVENUES, EXPENDITURES, AND CHANGES
IN FUND BALANCE - BUDGET (GAAP BASIS) AND ACTUAL
Year Ended June 30, 2020
(With Comparative Actual Amounts for Year Ended June 30, 2019)

	2020 Budget	2020 Actual	Variance - Positive (Negative)	2019 Actual
Revenues:				
Intergovernmental:				
Federal in lieu tax	$ 911,526	$ 974,644	$ 63,118	$ 932,088
Grants	-	-	-	6,978
Total intergovernmental	911,526	974,644	63,118	939,066
Miscellaneous:				
Investment income	5,000	55,752	50,752	41,902
Total revenues	916,526	1,030,396	113,870	980,968
Expenditures:				
Current:				
General government:				
Service and supplies	1,114,602	619,695	494,907	500,284
Capital outlay	192,900	79,948	112,952	33,018
Total general government	1,307,502	699,643	607,859	533,302
Public safety:				
Service and supplies	71,204	99	71,105	52,533
Capital outlay	105,347	-	105,347	-
Total public safety	176,551	99	176,452	52,533
Public works:				
Service and supplies	20,000	-	20,000	-
Community support:				
Service and supplies	27,602	6,720	20,882	16,602
Capital outlay	1,800	10,000	(8,200)	-
Total community support	29,402	16,720	12,682	16,602
Intergovernmental:				
Service and supplies	110,245	95,771	14,474	83,755
Debt service:				
Principal	24,157	24,157	-	50,641
Interest	271	1,784	(1,513)	1,935
Total debt service	24,428	25,941	(1,513)	52,576
Total expenditures	$ 1,668,128	$ 838,174	$ 829,954	$ 738,768

LINCOLN COUNTY, NEVADA
NONMAJOR FUND - FEDERAL IN LIEU TAX SPECIAL REVENUE FUND
SCHEDULE OF REVENUES, EXPENDITURES, AND CHANGES
IN FUND BALANCE - BUDGET (GAAP BASIS) AND ACTUAL
Year Ended June 30, 2020
(With Comparative Actual Amounts for Year Ended June 30, 2019)

	2020		Variance - Positive	2019
	Budget	Actual	(Negative)	Actual
Excess (deficiency) of revenues over expenditures	$ (751,602)	$ 192,222	$ 943,824	$ 242,200
Other financing sources (uses):				
Operating transfers out	(199,000)	(287,143)	(88,143)	(197,164)
Net change in fund balance	(950,602)	(94,921)	855,681	45,036
Fund balance:				
Beginning of year	1,121,552	2,128,828	1,007,276	2,083,792
End of year	$ 170,950	$ 2,033,907	$ 1,862,957	$ 2,128,828

LINCOLN COUNTY, NEVADA
NONMAJOR RESOURCE DEVELOPMENT AUTHORITY SPECIAL REVENUE FUND
COMPARATIVE BALANCE SHEETS
June 30, 2020 and 2019

	2020	2019
ASSETS		
Pooled cash and investments	$ 85,249	$ 87,564
LIABILITIES		
Accounts payable	$ 2,659	$ 9,291
Unearned revenue	82,590	78,273
Total liabilities	85,249	87,564
FUND BALANCE		
Nonspendable	-	-
Total liabilities and fund balance	$ 85,249	$ 87,564

LINCOLN COUNTY, NEVADA
NONMAJOR RESOURCE DEVELOPMENT AUTHORITY SPECIAL REVENUE FUND
SCHEDULE OF REVENUES, EXPENDITURES, AND CHANGES
IN FUND BALANCE - BUDGET (GAAP BASIS) AND ACTUAL
Year Ended June 30, 2020
(With Comparative Actual Amounts for Year Ended June 30, 2019)

	2020 Budget	2020 Actual	Variance - Positive (Negative)	2019 Actual
Revenues:				
Intergovernmental:				
Grants	$ 149,759	$ 67,169	$ (82,590)	$ 63,101
Miscellaneous:				
Donations	-	1,000	1,000	1,000
Total revenues	149,759	68,169	(81,590)	64,101
Expenditures:				
Current:				
Community support:				
Services and supplies	149,759	63,782	85,977	31,588
Capital outlay	-	4,387	(4,387)	32,513
Total expenditures	149,759	68,169	81,590	64,101
Excess (deficiency) of revenues over expenditures	-	-	-	-
Fund balance:				
Beginning of year	-	-	-	-
End of year	$ -	$ -	$ -	$ -

LINCOLN COUNTY, NEVADA
NONMAJOR COUNTY LIBRARY SPECIAL REVENUE FUND
COMPARATIVE BALANCE SHEETS
June 30, 2020 and 2019

	2020	2019
ASSETS		
Pooled cash and investments	$ 69,766	$ 63,313
Taxes receivable	1,298	1,438
Total assets	$ 71,064	$ 64,751
LIABILITIES		
Accounts payable	$ 1,277	$ 1,419
Accrued payroll and benefits	3,665	3,243
Total liabilities	4,942	4,662
DEFERRED INFLOWS OF RESOURCES		
Unavailable revenue - property taxes	1,132	1,137
FUND BALANCE		
Restricted	64,990	58,952
Total liabilities, deferred inflows of resources, and fund balance	$ 71,064	$ 64,751

LINCOLN COUNTY, NEVADA
NONMAJOR COUNTY LIBRARY SPECIAL REVENUE FUND
SCHEDULE OF REVENUES, EXPENDITURES, AND CHANGES IN FUND BALANCE - BUDGET (GAAP BASIS) AND ACTUAL
Year Ended June 30, 2020
(With Comparative Actual Amounts for Year Ended June 30, 2019)

	2020		Variance - Positive	2019
	Budget	Actual	(Negative)	Actual
Revenues:				
Taxes:				
Property taxes	$ 99,696	$ 97,898	$ (1,798)	$ 96,441
Intergovernmental:				
Fish and wildlife	-	93	93	107
Miscellaneous:				
Other	-	160	160	130
Donations	-	-	-	333
Total miscellaneous	-	160	160	463
Total revenues	99,696	98,151	(1,545)	97,011
Expenditures:				
Current:				
Culture and recreation:				
Libraries:				
Salaries and wages	50,140	46,100	4,040	44,547
Employee benefits	21,955	21,597	358	20,201
Services and supplies	35,100	24,416	10,684	24,298
Capital outlay	15,000	-	15,000	-
Total expenditures	122,195	92,113	30,082	89,046
Excess (deficiency) of revenues over expenditures	(22,499)	6,038	28,537	7,965
Fund balance:				
Beginning of year	30,290	58,952	28,662	50,987
End of year	$ 7,791	$ 64,990	$ 57,199	$ 58,952

LINCOLN COUNTY, NEVADA
NONMAJOR MUSEUM SPECIAL REVENUE FUND
COMPARATIVE BALANCE SHEETS
June 30, 2020 and 2019

	2020	2019
ASSETS		
Pooled cash and investments	$ 86,180	$ 70,536
Taxes receivable	659	731
Total assets	$ 86,839	$ 71,267
LIABILITIES		
Accounts payable	$ 785	$ 241
Accrued payroll and benefits	1,431	2,555
Total liabilities	2,216	2,796
DEFERRED INFLOWS OF RESOURCES		
Unavailable revenue - property taxes	575	579
FUND BALANCE		
Restricted	84,048	67,892
Total liabilities, deferred inflows of resources, and fund balance	$ 86,839	$ 71,267

LINCOLN COUNTY, NEVADA
NONMAJOR MUSEUM SPECIAL REVENUE FUND
SCHEDULE OF REVENUES, EXPENDITURES, AND CHANGES IN FUND BALANCE - BUDGET (GAAP BASIS) AND ACTUAL
Year Ended June 30, 2020
(With Comparative Actual Amounts for Year Ended June 30, 2019)

	2020		Variance - Positive	2019
	Budget	Actual	(Negative)	Actual
Revenues:				
Taxes:				
Property taxes	$ 50,902	$ 49,903	$ (999)	$ 49,172
Intergovernmental:				
Fish and wildlife	-	47	47	54
Miscellaneous:				
Donations	-	3,297	3,297	6,421
Total revenues	50,902	53,247	2,345	55,647
Expenditures:				
Current:				
Culture and recreation:				
Museum:				
Salaries and wages	43,557	26,050	17,507	29,257
Employee benefits	11,531	4,507	7,024	9,622
Services and supplies	13,500	6,534	6,966	6,228
Total expenditures	68,588	37,091	31,497	45,107
Net change in fund balance	(17,686)	16,156	33,842	10,540
Fund balance:				
Beginning of year	24,934	67,892	42,958	57,352
End of year	$ 7,248	$ 84,048	$ 76,800	$ 67,892

LINCOLN COUNTY, NEVADA
NONMAJOR SENIOR NUTRITION SPECIAL REVENUE FUND
COMPARATIVE BALANCE SHEETS
June 30, 2020 and 2019

	2020	2019
ASSETS		
Pooled cash and investments	$ 101,505	$ 47,466
Taxes receivable	1,596	1,760
Due from other governments	15,257	25,493
Total assets	$ 118,358	$ 74,719
LIABILITIES		
Accounts payable	$ 9,828	$ 10,692
Accrued payroll and benefits	6,331	6,144
Total liabilities	16,159	16,836
DEFERRED INFLOWS OF RESOURCES		
Unavailable revenue - property taxes	1,394	1,395
FUND BALANCE		
Restricted	100,805	56,488
Total liabilities, deferred inflows of resources, and fund balance	$ 118,358	$ 74,719

LINCOLN COUNTY, NEVADA
NONMAJOR SENIOR NUTRITION SPECIAL REVENUE FUND
SCHEDULE OF REVENUES, EXPENDITURES, AND CHANGES IN FUND BALANCE - BUDGET (GAAP BASIS) AND ACTUAL
Year Ended June 30, 2020
(With Comparative Actual Amounts for Year Ended June 30, 2019)

	2020		Variance - Positive	2019
	Budget	Actual	(Negative)	Actual
Revenues:				
Taxes:				
Property taxes	$ 122,792	$ 119,868	$ (2,924)	$ 118,181
Intergovernmental:				
Grants	130,000	138,107	8,107	184,060
Fish and wildlife	115	113	(2)	129
Total intergovernmental	130,115	138,220	8,105	184,189
Charges for services:				
Sales - meals	25,000	21,891	(3,109)	23,859
Miscellaneous:				
Other	2,000	-	(2,000)	-
Donations	-	2,375	2,375	1,439
Total miscellaneous	2,000	2,375	375	1,439
Total revenues	279,907	282,354	2,447	327,668
Expenditures:				
Current:				
Welfare:				
Salaries and wages	75,953	71,785	4,168	74,243
Employee benefits	35,293	36,633	(1,340)	35,477
Services and supplies	193,500	162,927	30,573	163,188
Capital outlay	-	-	-	46,472
Total expenditures	304,746	271,345	33,401	319,380
Excess (deficiency) of revenues over expenditures	(24,839)	11,009	35,848	8,288
Other financing sources (uses):				
Operating transfers in	14,000	33,308	19,308	13,190
Net change in fund balance	(10,839)	44,317	55,156	21,478
Fund balance:				
Beginning of year	30,208	56,488	26,280	35,010
End of year	$ 19,369	$ 100,805	$ 81,436	$ 56,488

LINCOLN COUNTY, NEVADA
NONMAJOR TRANSPORTATION SPECIAL REVENUE FUND
COMPARATIVE BALANCE SHEETS
June 30, 2020 and 2019

	2020	2019
ASSETS		
Pooled cash and investments	$ 200,082	$ 177,516
Due from other governments	9,825	9,375
Total assets	$ 209,907	$ 186,891
LIABILITIES		
Accounts payable	$ 956	$ 7,324
Accrued payroll and benefits	4,567	3,959
Total liabilities	5,523	11,283
FUND BALANCE		
Restricted	204,384	175,608
Total liabilities and fund balance	$ 209,907	$ 186,891

LINCOLN COUNTY, NEVADA
NONMAJOR TRANSPORTATION SPECIAL REVENUE FUND
SCHEDULE OF REVENUES, EXPENDITURES, AND CHANGES
IN FUND BALANCE - BUDGET (GAAP BASIS) AND ACTUAL
Year Ended June 30, 2020
(With Comparative Actual Amounts for Year Ended June 30, 2019)

	2020		Variance - Positive	2019
	Budget	Actual	(Negative)	Actual
Revenues:				
Intergovernmental:				
Grants	$ 70,000	$ 94,589	$ 24,589	$ 78,402
Charges for services:				
Bus fares	5,800	3,091	(2,709)	4,297
Total revenues	75,800	97,680	21,880	82,699
Expenditures:				
Current:				
Community support:				
Salaries and wages	52,840	49,106	3,734	42,971
Employee benefits	29,352	28,429	923	25,479
Services and supplies	51,400	26,369	25,031	29,936
Total expenditures	133,592	103,904	29,688	98,386
Excess (deficiency) of revenues over expenditures	(57,792)	(6,224)	51,568	(15,687)
Other financing sources (uses):				
Operating transfers in	35,000	35,000	-	28,806
Net change in fund balance	(22,792)	28,776	51,568	13,119
Fund balance:				
Beginning of year	173,632	175,608	1,976	162,489
End of year	$ 150,840	$ 204,384	$ 53,544	$ 175,608

LINCOLN COUNTY, NEVADA
NONMAJOR AGRICULTURAL EXTENSION SPECIAL REVENUE FUND
COMPARATIVE BALANCE SHEETS
June 30, 2020 and 2019

	2020	2019
ASSETS		
Pooled cash and investments	$ 28,053	$ 28,503
Taxes receivable	311	342
Total assets	$ 28,364	$ 28,845
LIABILITIES		
Accounts payable	$ 1,810	$ 483
Accrued payroll and benefits	602	662
Total liabilities	2,412	1,145
DEFERRED INFLOWS OF RESOURCES		
Unavailable revenue - property taxes	272	272
FUND BALANCE		
Restricted	25,680	27,428
Total liabilities, deferred inflows of resources, and fund balance	$ 28,364	$ 28,845

LINCOLN COUNTY, NEVADA
NONMAJOR AGRICULTURAL EXTENSION SPECIAL REVENUE FUND
SCHEDULE OF REVENUES, EXPENDITURES, AND CHANGES
IN FUND BALANCE - BUDGET (GAAP BASIS) AND ACTUAL
Year Ended June 30, 2020
(With Comparative Actual Amounts for Year Ended June 30, 2019)

	2020 Budget	2020 Actual	Variance - Positive (Negative)	2019 Actual
Revenues:				
Taxes:				
Property taxes	$ 23,858	$ 23,285	$ (573)	$ 22,958
Intergovernmental:				
Fish and wildlife	-	22	22	25
Miscellaneous:				
Other	5,460	-	(5,460)	-
Total revenues	29,318	23,307	(6,011)	22,983
Expenditures:				
Current:				
Community support:				
Salaries and wages	13,913	13,507	406	13,403
Employee benefits	1,481	1,616	(135)	1,399
Services and supplies	25,420	9,932	15,488	6,194
Total expenditures	40,814	25,055	15,759	20,996
Excess (deficiency) of revenues over expenditures	(11,496)	(1,748)	9,748	1,987
Fund balance:				
Beginning of year	22,252	27,428	5,176	25,441
End of year	$ 10,756	$ 25,680	$ 14,924	$ 27,428

LINCOLN COUNTY, NEVADA
NONMAJOR INDIGENT SPECIAL REVENUE FUND
COMPARATIVE BALANCE SHEETS
June 30, 2020 and 2019

	2020	2019
ASSETS		
Pooled cash and investments	$ 364,791	$ 378,913
Taxes receivable	1,117	1,231
Total assets	$ 365,908	$ 380,144
LIABILITIES		
Accounts payable	$ 11,442	$ 15,178
Accrued payroll and benefits	3,496	3,867
Total liabilities	14,938	19,045
DEFERRED INFLOWS OF RESOURCES		
Unavailable revenue - property taxes	977	977
FUND BALANCE		
Restricted	349,993	360,122
Total liabilities, deferred inflows of resources, and fund balance	$ 365,908	$ 380,144

LINCOLN COUNTY, NEVADA
NONMAJOR INDIGENT SPECIAL REVENUE FUND
SCHEDULE OF REVENUES, EXPENDITURES, AND CHANGES IN FUND BALANCE - BUDGET (GAAP BASIS) AND ACTUAL
Year Ended June 30, 2020
(With Comparative Actual Amounts for Year Ended June 30, 2019)

	2020 Budget	2020 Actual	Variance - Positive (Negative)	2019 Actual
Revenues:				
Taxes:				
Property taxes	$ 85,648	$ 83,592	$ (2,056)	$ 82,419
Intergovernmental:				
Fish and wildlife	-	78	78	91
Total revenues	85,648	83,670	(1,978)	82,510
Expenditures:				
Current:				
Welfare:				
Salaries and wages	51,699	47,378	4,321	48,490
Employee benefits	21,840	19,505	2,335	20,290
Service and supplies	291,401	18,927	272,474	21,560
Jail:				
Service and supplies	25,000	7,989	17,011	-
Total expenditures	389,940	93,799	296,141	90,340
Excess (deficiency) of revenues over expenditures	(304,292)	(10,129)	294,163	(7,830)
Fund balance:				
Beginning of year	304,292	360,122	55,830	367,952
End of year	$ -	$ 349,993	$ 349,993	$ 360,122

LINCOLN COUNTY, NEVADA
NONMAJOR MEDICAL INDIGENT SPECIAL REVENUE FUND
COMPARATIVE BALANCE SHEETS
June 30, 2020 and 2019

	2020	2019
ASSETS		
Pooled cash and investments	$ 517,096	$ 414,480
Interest receivable	817	930
Taxes receivable	2,491	2,742
Total assets	$ 520,404	$ 418,152
LIABILITIES		
Accounts payable	$ 79,986	$ 17,855
DEFERRED INFLOWS OF RESOURCES		
Unavailable revenue - property taxes	2,177	2,177
FUND BALANCE		
Restricted	438,241	398,120
Total liabilities, deferred inflows of resources, and fund balance	$ 520,404	$ 418,152

LINCOLN COUNTY, NEVADA
NONMAJOR MEDICAL INDIGENT SPECIAL REVENUE FUND
SCHEDULE OF REVENUES, EXPENDITURES, AND CHANGES IN FUND BALANCE - BUDGET (GAAP BASIS) AND ACTUAL
Year Ended June 30, 2020
(With Comparative Actual Amounts for Year Ended June 30, 2019)

	2020 Budget	2020 Actual	Variance - Positive (Negative)	2019 Actual
Revenues:				
Taxes:				
Property taxes	$ 190,862	$ 186,277	$ (4,585)	$ 183,666
Intergovernmental:				
Fish and wildlife	-	175	175	201
Miscellaneous:				
Investment income	300	13,367	13,067	8,200
Total revenues	191,162	199,819	8,657	192,067
Expenditures:				
Current:				
Welfare:				
Service and supplies	412,209	159,698	252,511	154,890
Excess (deficiency) of revenues over expenditures	(221,047)	40,121	261,168	37,177
Fund balance:				
Beginning of year	411,909	398,120	(13,789)	360,943
End of year	$ 190,862	$ 438,241	$ 247,379	$ 398,120

LINCOLN COUNTY, NEVADA
NONMAJOR CHINA SPRINGS SPECIAL REVENUE FUND
COMPARATIVE BALANCE SHEETS
June 30, 2020 and 2019

	2020	2019
ASSETS		
Pooled cash and investments	$ 3,579	$ 1,422
Taxes receivable	131	144
Due from other governments	-	2
Total assets	$ 3,710	$ 1,568
LIABILITIES		
Accounts payable	$ -	$ -
DEFERRED INFLOWS OF RESOURCES		
Unavailable revenue - property taxes	113	114
FUND BALANCE		
Restricted	3,597	1,454
Total liabilities, deferred inflows of resources, and fund balance	$ 3,710	$ 1,568

LINCOLN COUNTY, NEVADA
NONMAJOR CHINA SPRINGS SPECIAL REVENUE FUND
SCHEDULE OF REVENUES, EXPENDITURES, AND CHANGES
IN FUND BALANCE - BUDGET (GAAP BASIS) AND ACTUAL
Year Ended June 30, 2020
(With Comparative Actual Amounts for Year Ended June 30, 2019)

	2020		Variance - Positive	2019
	Budget	Actual	(Negative)	Actual
Revenues:				
Taxes:				
Property taxes	$ 10,021	$ 9,779	$ (242)	$ 9,644
Intergovernmental:				
Fish and wildlife	-	9	9	11
Total revenues	10,021	9,788	(233)	9,655
Expenditures:				
Current:				
Intergovernmental:				
Services and supplies	19,553	17,645	1,908	19,305
Excess (deficiency) of revenues over expenditures	(9,532)	(7,857)	1,675	(9,650)
Other financing sources (uses):				
Operating transfers in	10,000	10,000	-	10,000
Net change in fund balance	468	2,143	1,675	350
Fund balance:				
Beginning of year	1,104	1,454	350	1,104
End of year	$ 1,572	$ 3,597	$ 2,025	$ 1,454

LINCOLN COUNTY, NEVADA
NONMAJOR AMBULANCE SPECIAL REVENUE FUND
COMPARATIVE BALANCE SHEETS
June 30, 2020 and 2019

	2020	2019
ASSETS		
Pooled cash and investments	$ 29,170	$ 27,537
Interest receivable	56	29
Due from others	10,230	-
Total assets	$ 39,456	$ 27,566
LIABILITIES		
Accounts payable	$ 3,672	$ 2,748
Accrued payroll and benefits	2,213	1,150
Total liabilities	5,885	3,898
FUND BALANCE		
Committed	33,571	23,668
Total liabilities and fund balance	$ 39,456	$ 27,566

LINCOLN COUNTY, NEVADA
NONMAJOR AMBULANCE SPECIAL REVENUE FUND
SCHEDULE OF REVENUES, EXPENDITURES, AND CHANGES IN FUND BALANCE - BUDGET (GAAP BASIS) AND ACTUAL
Year Ended June 30, 2020
(With Comparative Actual Amounts for Year Ended June 30, 2019)

	2020		Variance - Positive	2019
	Budget	Actual	(Negative)	Actual
Revenues:				
Intergovernmental:				
Grant	$ -	$ 5,231	$ 5,231	$ -
Mutual aid agreement	-	5,000	5,000	-
Total intergovernmental	-	10,231	10,231	-
Charges for services:				
Ambulance fees	126,255	134,391	8,136	120,597
Miscellaneous:				
Investment income	861	921	60	259
Total revenues	127,116	145,543	18,427	120,856
Expenditures:				
Current:				
Health:				
Salaries and wages	66,784	49,115	17,669	36,260
Employee benefits	10,400	7,990	2,410	5,850
Services and supplies	73,600	69,208	4,392	64,531
Capital outlay	-	9,327	(9,327)	-
Total expenditures	150,784	135,640	15,144	106,641
Excess (deficiency) of revenues over expenditures	(23,668)	9,903	33,571	14,215
Fund balance:				
Beginning of year	23,668	23,668	-	9,453
End of year	$ -	$ 33,571	$ 33,571	$ 23,668

LINCOLN COUNTY, NEVADA
NONMAJOR REGIONAL TRANSPORTATION COMMISSION SPECIAL REVENUE FUND
COMPARATIVE BALANCE SHEETS
June 30, 2020 and 2019

	2020	2019
ASSETS		
Pooled cash and investments	$ 755,110	$ 641,915
Interest receivable	2,957	1,233
Due from other governments	23,860	32,939
Total assets	$ 781,927	$ 676,087
LIABILITIES		
Accounts payable	$ 235	$ 5,750
Accrued payroll and benefits	-	63
Total liabilities	235	5,813
FUND BALANCE		
Restricted	781,692	670,274
Total liabilities and fund balance	$ 781,927	$ 676,087

LINCOLN COUNTY, NEVADA
NONMAJOR REGIONAL TRANSPORTATION COMMISSION SPECIAL REVENUE FUND
SCHEDULE OF REVENUES, EXPENDITURES, AND CHANGES
IN FUND BALANCE - BUDGET (GAAP BASIS) AND ACTUAL
Year Ended June 30, 2020
(With Comparative Actual Amounts for Year Ended June 30, 2019)

	2020 Budget	2020 Actual	Variance - Positive (Negative)	2019 Actual
Revenues:				
Intergovernmental:				
Optional $0.04 gas tax	$ 120,221	$ 123,268	$ 3,047	$ 119,694
Miscellaneous:				
Investment income	2,000	25,044	23,044	10,876
Total revenues	122,221	148,312	26,091	130,570
Expenditures:				
Current:				
Public works:				
Employee benefits	-	130	(130)	254
Services and supplies	450,000	1,764	448,236	10,727
Capital outlay	-	-	-	22,350
Total expenditures	450,000	1,894	448,106	33,331
Excess (deficiency) of revenues over expenditures	(327,779)	146,418	474,197	97,239
Other financing sources (uses):				
Operating transfers out	(35,000)	(35,000)	-	(28,806)
Net change in fund balance	(362,779)	111,418	474,197	68,433
Fund balance:				
Beginning of year	369,554	670,274	300,720	601,841
End of year	$ 6,775	$ 781,692	$ 774,917	$ 670,274

LINCOLN COUNTY, NEVADA
NONMAJOR ROOM TAX SPECIAL REVENUE FUND
COMPARATIVE BALANCE SHEETS
June 30, 2020 and 2019

	2020	2019
ASSETS		
Pooled cash and investments	$ 98,711	$ 92,393
Taxes receivable	7,746	9,413
Total assets	$ 106,457	$ 101,806
LIABILITIES		
Accounts payable	$ 10,895	$ 3,384
Accrued payroll and benefits	370	438
Total liabilities	11,265	3,822
FUND BALANCE		
Restricted	95,192	97,984
Total liabilities and fund balance	$ 106,457	$ 101,806

LINCOLN COUNTY, NEVADA
NONMAJOR ROOM TAX SPECIAL REVENUE FUND
SCHEDULE OF REVENUES, EXPENDITURES AND CHANGES IN FUND BALANCE - BUDGET (GAAP BASIS) AND ACTUAL
Year Ended June 30, 2020
(With Comparative Actual Amounts for Year Ended June 30, 2019)

	2020 Budget	2020 Actual	Variance - Positive (Negative)	2019 Actual
Revenues:				
Taxes:				
Room tax	$ 75,000	$ 70,479	$ (4,521)	$ 69,119
Expenditures:				
Current:				
Culture and recreation:				
Salaries and wages	3,500	3,360	140	2,800
Employee benefits	900	681	219	698
Services and supplies	64,100	53,502	10,598	32,569
Total culture and recreation	68,500	57,543	10,957	36,067
Intergovernmental:				
Services and supplies	6,500	5,728	772	4,879
Total expenditures	75,000	63,271	11,729	40,946
Excess (deficiency) of revenues over expenditures	-	7,208	7,208	28,173
Other financing sources (uses):				
Operating transfers out	(10,000)	(10,000)	-	(10,000)
Net change in fund balance	(10,000)	(2,792)	7,208	18,173
Fund balance:				
Beginning of year	92,911	97,984	5,073	79,811
End of year	$ 82,911	$ 95,192	$ 12,281	$ 97,984

LINCOLN COUNTY, NEVADA
NONMAJOR LEGAL AID SERVICES SPECIAL REVENUE FUND
COMPARATIVE BALANCE SHEETS
June 30, 2020 and 2019

	2020	2019
ASSETS		
Pooled cash and investments	$ (3,195)	$ 577
LIABILITIES		
Accounts payable	$ -	$ 770
FUND BALANCE		
Unassigned	(3,195)	(193)
Total liabilities and fund balance	$ (3,195)	$ 577

LINCOLN COUNTY, NEVADA
NONMAJOR LEGAL AID SERVICES SPECIAL REVENUE FUND
SCHEDULE OF REVENUES, EXPENDITURES, AND CHANGES IN FUND BALANCE - BUDGET (GAAP BASIS) AND ACTUAL
Year Ended June 30, 2020
(With Comparative Actual Amounts for Year Ended June 30, 2019)

	2020			
	Budget	Actual	Variance - Positive (Negative)	2019 Actual
Revenues:				
Charges for services:				
Other	$ 2,000	$ 1,652	$ (348)	$ 1,743
Expenditures:				
Current:				
Judicial:				
Services and supplies	10,000	4,654	5,346	12,566
Excess (deficiency) of revenues over expenditures	(8,000)	(3,002)	4,998	(10,823)
Fund balance:				
Beginning of year	8,000	(193)	(8,193)	10,630
End of year	$ -	$ (3,195)	$ (3,195)	$ (193)

LINCOLN COUNTY, NEVADA
NONMAJOR FORENSIC SERVICES SPECIAL REVENUE FUND
COMPARATIVE BALANCE SHEETS
June 30, 2020 and 2019

	2020	2019
ASSETS		
Pooled cash and investments	$ 5,751	$ 8,628
LIABILITIES		
Accounts payable	$ 577	$ 125
FUND BALANCE		
Restricted	5,174	8,503
Total liabilities and fund balance	$ 5,751	$ 8,628

LINCOLN COUNTY, NEVADA
NONMAJOR FORENSIC SERVICES SPECIAL REVENUE FUND
SCHEDULE OF REVENUES, EXPENDITURES, AND CHANGES IN FUND BALANCE - BUDGET (GAAP BASIS) AND ACTUAL
Year Ended June 30, 2020
(With Comparative Actual Amounts for Year Ended June 30, 2019)

	2020 Budget	2020 Actual	Variance - Positive (Negative)	2019 Actual
Revenues:				
Charges for services:				
Other	$ 2,500	$ 1,977	$ (523)	$ 2,066
Expenditures:				
Current:				
Public safety:				
Service and supplies	10,500	5,306	5,194	1,323
Excess (deficiency) of revenues over expenditures	(8,000)	(3,329)	4,671	743
Fund balance:				
Beginning of year	10,000	8,503	(1,497)	7,760
End of year	$ 2,000	$ 5,174	$ 3,174	$ 8,503

LINCOLN COUNTY, NEVADA
NONMAJOR ADMINISTRATIVE ASSESSMENT SPECIAL REVENUE FUND
COMPARATIVE BALANCE SHEETS
June 30, 2020 and 2019

	2020	2019
ASSETS		
Pooled cash and investments	$ 111,115	$ 110,998
Interest receivable	183	219
Total assets	$ 111,298	$ 111,217
LIABILITIES		
Accounts payable	$ 972	$ 100
FUND BALANCE		
Restricted	110,326	111,117
Total liabilities and fund balance	$ 111,298	$ 111,217

LINCOLN COUNTY, NEVADA
NONMAJOR ADMINISTRATIVE ASSESSMENT SPECIAL REVENUE FUND
SCHEDULE OF REVENUES, EXPENDITURES, AND CHANGES
IN FUND BALANCE - BUDGET (GAAP BASIS) AND ACTUAL
Year Ended June 30, 2020
(With Comparative Actual Amounts for Year Ended June 30, 2019)

	2020 Budget	2020 Actual	Variance - Positive (Negative)	2019 Actual
Revenues:				
Fines and forfeitures:				
Administrative assessments	$ 34,000	$ 30,503	$ (3,497)	$ 44,819
Miscellaneous:				
Investment income	160	2,971	2,811	1,939
Total revenues	34,160	33,474	(686)	46,758
Expenditures:				
Current:				
Judicial:				
Services and supplies	8,258	34,265	(26,007)	9,808
Capital outlay	131,039	-	131,039	8,783
Total expenditures	139,297	34,265	105,032	18,591
Excess (deficiency) of revenues over expenditures	(105,137)	(791)	104,346	28,167
Fund balance:				
Beginning of year	105,180	111,117	5,937	82,950
End of year	$ 43	$ 110,326	$ 110,283	$ 111,117

LINCOLN COUNTY, NEVADA
NONMAJOR FORFEITURE SPECIAL REVENUE FUND
COMPARATIVE BALANCE SHEETS
June 30, 2020 and 2019

	2020	2019
ASSETS		
Pooled cash and investments	$ 48,619	$ 51,215
Interest receivable	65	120
Total assets	$ 48,684	$ 51,335
LIABILITIES		
Accounts payable	$ 2,568	$ -
FUND BALANCE		
Restricted	46,116	51,335
Total liabilities and fund balance	$ 48,684	$ 51,335

LINCOLN COUNTY, NEVADA
NONMAJOR FORFEITURE SPECIAL REVENUE FUND
SCHEDULE OF REVENUES, EXPENDITURES, AND CHANGES IN FUND BALANCE - BUDGET (GAAP BASIS) AND ACTUAL
Year Ended June 30, 2020
(With Comparative Actual Amounts for Year Ended June 30, 2019)

	2020		Variance-Positive	2019
	Budget	Actual	(Negative)	Actual
Revenues:				
Intergovernmental:				
Grant	$ -	$ 27,052	$ 27,052	$ -
Fines and forfeitures:				
Other	30,000	-	(30,000)	-
Miscellaneous:				
Investment income	-	1,062	1,062	1,061
Rent	-	1,197	1,197	-
Total miscellaneous	-	2,259	2,259	1,061
Total revenues	30,000	29,311	(689)	1,061
Expenditures:				
Current:				
Public safety:				
Services and supplies	45,000	34,530	10,470	8,246
Excess (deficiency) of revenues over expenditures	(15,000)	(5,219)	9,781	(7,185)
Fund balance:				
Beginning of year	22,382	51,335	28,953	58,520
End of year	$ 7,382	$ 46,116	$ 38,734	$ 51,335

LINCOLN COUNTY, NEVADA
NONMAJOR RECORDER TECHNOLOGY SPECIAL REVENUE FUND
COMPARATIVE BALANCE SHEETS
June 30, 2020 and 2019

	2020	2019
ASSETS		
Pooled cash and investments	$ 32,586	$ 23,444
Interest receivable	50	46
Total assets	$ 32,636	$ 23,490
LIABILITIES		
Accounts payable	$ -	$ -
FUND BALANCE		
Restricted	32,636	23,490
Total liabilities and fund balance	$ 32,636	$ 23,490

LINCOLN COUNTY, NEVADA
NONMAJOR RECORDER TECHNOLOGY SPECIAL REVENUE FUND
SCHEDULE OF REVENUES, EXPENDITURES, AND CHANGES
IN FUND BALANCE - BUDGET (GAAP BASIS) AND ACTUAL
Year Ended June 30, 2020
(With Comparative Actual Amounts for Year Ended June 30, 2019)

	2020 Budget	2020 Actual	Variance-Positive (Negative)	2019 Actual
Revenues:				
Charges for services:				
User fees	$ 6,000	$ 8,325	$ 2,325	$ 7,065
Miscellaneous:				
Investment income	-	821	821	402
Total revenues	6,000	9,146	3,146	7,467
Expenditures:				
Current:				
General government:				
Services and supplies	20,000	-	20,000	-
Excess (deficiency) of revenues over expenditures	(14,000)	9,146	23,146	7,467
Fund balance:				
Beginning of year	14,000	23,490	9,490	16,023
End of year	$ -	$ 32,636	$ 32,636	$ 23,490

LINCOLN COUNTY, NEVADA
NONMAJOR L.C. HOUSING AUTHORITY SPECIAL REVENUE FUND
COMPARATIVE BALANCE SHEETS
June 30, 2020 and 2019

	2020	2019
ASSETS		
Pooled cash and investments	$ 23,371	$ 20,496
Interest receivable	36	44
Total assets	$ 23,407	$ 20,540
LIABILITIES		
Accounts payable	$ 1,055	$ 521
Accrued payroll and benefits	148	205
Total liabilities	1,203	726
FUND BALANCE		
Restricted	22,204	19,814
Total liabilities and fund balance	$ 23,407	$ 20,540

LINCOLN COUNTY, NEVADA
NONMAJOR L. C. HOUSING AUTHORITY SPECIAL REVENUE FUND
SCHEDULE OF REVENUES, EXPENDITURES, AND CHANGES
IN FUND BALANCE - BUDGET (GAAP BASIS) AND ACTUAL
Year Ended June 30, 2020
(With Comparative Actual Amounts for Year Ended June 30, 2019)

	2020		Variance - Positive	2019
	Budget	Actual	(Negative)	Actual
Revenues:				
Miscellaneous:				
Rent	$ 35,000	$ 34,982	$ (18)	$ 33,630
Investment income	-	589	589	389
Total revenues	35,000	35,571	571	34,019
Expenditures:				
Current:				
Community support:				
Salaries and wages	18,745	21,209	(2,464)	24,555
Employee benefits	1,957	2,563	(606)	2,986
Services and supplies	14,309	9,409	4,900	18,527
Capital outlay	10,000	-	10,000	-
Total expenditures	45,011	33,181	11,830	46,068
Excess (deficiency) of revenues over expenditures	(10,011)	2,390	12,401	(12,049)
Fund balance:				
Beginning of year	18,736	19,814	1,078	31,863
End of year	$ 8,725	$ 22,204	$ 13,479	$ 19,814

LINCOLN COUNTY, NEVADA
NONMAJOR ALAMO CLINIC SPECIAL REVENUE FUND
COMPARATIVE BALANCE SHEETS
June 30, 2020 and 2019

	2020	2019
ASSETS		
Pooled cash and investments	$ 378	$ 10,982
Taxes receivable	1,321	1,455
Total assets	$ 1,699	$ 12,437
LIABILITIES		
Accounts payable	$ 378	$ 10,787
DEFERRED INFLOWS OF RESOURCES		
Unavailable revenue - property taxes	1,154	1,154
FUND BALANCE		
Restricted	167	496
Total liabilities, deferred inflows of resources, and fund balance	$ 1,699	$ 12,437

LINCOLN COUNTY, NEVADA
NONMAJOR ALAMO CLINIC SPECIAL REVENUE FUND
SCHEDULE OF REVENUES, EXPENDITURES, AND CHANGES IN FUND BALANCE -BUDGET (GAAP BASIS) AND ACTUAL
Year Ended June 30, 2020
(With Comparative Actual Amounts for Year Ended June 30, 2019)

	2020 Budget	2020 Actual	Variance - Positive (Negative)	2019 Actual
Revenues:				
Taxes:				
Property taxes	$ 101,396	$ 98,959	$ (2,437)	$ 97,575
Intergovernmental:				
Fish and wildlife	-	93	93	107
Total revenues	101,396	99,052	(2,344)	97,682
Expenditures:				
Current:				
Health:				
Services and supplies	101,396	99,381	2,015	97,439
Excess (deficiency) of revenues over expenditures	-	(329)	(329)	243
Fund balance:				
Beginning of year	253	496	243	253
End of year	$ 253	$ 167	$ (86)	$ 496

LINCOLN COUNTY, NEVADA
NONMAJOR FAIR BOARD SPECIAL REVENUE FUND
COMPARATIVE BALANCE SHEETS
June 30, 2020 and 2019

	2020	2019
ASSETS		
Pooled cash and investments	$ 24,186	$ 19,773
Interest receivable	23	25
Total assets	$ 24,209	$ 19,798
LIABILITIES		
Accounts payable	$ 488	$ -
FUND BALANCE		
Restricted	23,721	19,798
Total liabilities and fund balance	$ 24,209	$ 19,798

LINCOLN COUNTY, NEVADA
NONMAJOR FAIR BOARD SPECIAL REVENUE FUND
SCHEDULE OF REVENUES, EXPENDITURES, AND CHANGES
IN FUND BALANCE - BUDGET (GAAP BASIS) AND ACTUAL
Year Ended June 30, 2020
(With Comparative Actual Amounts for Year Ended June 30, 2019)

	2020 Budget	2020 Actual	Variance - Positive (Negative)	2019 Actual
Revenues:				
Miscellaneous:				
Investment income	$ -	$ 380	$ 380	$ 216
Fees	33,697	29,571	(4,126)	31,818
Donations	-	3,795	3,795	100
Total revenues	33,697	33,746	49	32,134
Expenditures:				
Current:				
Culture and recreation:				
Parks:				
Services and supplies	53,815	39,823	13,992	42,454
Excess (deficiency) of revenues over expenditures	(20,118)	(6,077)	14,041	(10,320)
Other financing sources (uses):				
Operating transfers in	10,000	10,000	-	10,000
Net change in fund balance	(10,118)	3,923	14,041	(320)
Fund balance:				
Beginning of year	10,118	19,798	9,680	20,118
End of year	$ -	$ 23,721	$ 23,721	$ 19,798

LINCOLN COUNTY, NEVADA
NONMAJOR MULTI-SPECIES HABITAT CONSERVATION SPECIAL REVENUE FUND
COMPARATIVE BALANCE SHEETS
June 30, 2020 and 2019

	2020	2019
ASSETS		
Pooled cash and investments	$ 13,837	$ 16,909
Interest receivable	24	40
Total assets	$ 13,861	$ 16,949
LIABILITIES		
Accounts payable	$ 621	$ 621
Unearned revenue	13,240	16,328
Total liabilities	13,861	16,949
FUND BALANCE		
Restricted	-	-
Total liabilities and fund balance	$ 13,861	$ 16,949

LINCOLN COUNTY, NEVADA
NONMAJOR MULTI-SPECIES HABITAT CONSERVATION SPECIAL REVENUE FUND
SCHEDULE OF REVENUES, EXPENDITURES, AND CHANGES
IN FUND BALANCE - BUDGET (GAAP BASIS) AND ACTUAL
Year Ended June 30, 2020
(With Comparative Actual Amounts for Year Ended June 30, 2019)

	2020 Budget	2020 Actual	Variance - Positive (Negative)	2019 Actual
Revenues:				
Intergovernmental:				
Grants	$ 18,090	$ 3,087	$ (15,003)	$ 4,818
Miscellaneous:				
Investment income	-	393	393	351
Total revenues	18,090	3,480	(14,610)	5,169
Expenditures:				
Current:				
General government:				
Services and supplies	18,090	3,480	14,610	5,169
Excess (deficiency) of revenues over expenditures	-	-	-	-
Fund balance:				
Beginning of year	-	-	-	-
End of year	$ -	$ -	$ -	$ -

LINCOLN COUNTY, NEVADA
NONMAJOR MULTI-SPECIES HABITAT CONSERVATION SEC. 7 SPECIAL REVENUE FUND
COMPARATIVE BALANCE SHEETS
June 30, 2020 and 2019

	2020	2019
ASSETS		
Pooled cash and investments	$ 902,339	$ 877,978
Interest receivable	1,461	1,930
Total assets	$ 903,800	$ 879,908
LIABILITIES		
Accounts payable	$ -	$ -
FUND BALANCE		
Restricted	903,800	879,908
Total liabilities and fund balance	$ 903,800	$ 879,908

LINCOLN COUNTY, NEVADA
NONMAJOR MULTI-SPECIES HABITAT CONSERVATION SEC. 7 SPECIAL REVENUE FUND
SCHEDULE OF REVENUES, EXPENDITURES, AND CHANGES
IN FUND BALANCE - BUDGET (GAAP BASIS) AND ACTUAL
Year Ended June 30, 2020
(With Comparative Actual Amounts for Year Ended June 30, 2019)

	2020 Budget	2020 Actual	Variance - Positive (Negative)	2019 Actual
Revenues:				
Miscellaneous:				
Investment income	$ 5,000	$ 23,892	$ 18,892	$ 17,027
Expenditures:				
Current:				
General government:				
Services and supplies	869,381	-	869,381	-
Excess (deficiency) of revenues over expenditures	(864,381)	23,892	888,273	17,027
Fund balance:				
Beginning of year	864,381	879,908	15,527	862,881
End of year	$ -	$ 903,800	$ 903,800	$ 879,908

LINCOLN COUNTY, NEVADA
NONMAJOR YOUTH ACTIVITIES COUNSEL SPECIAL REVENUE FUND
COMPARATIVE BALANCE SHEETS
June 30, 2020 and 2019

	2020	2019
ASSETS		
Pooled cash and investments	$ 6,007	$ 6,007
LIABILITIES		
Accrued payroll and benefits	$ -	$ -
FUND BALANCE		
Restricted	6,007	6,007
Total liabilities and fund balance	$ 6,007	$ 6,007

LINCOLN COUNTY, NEVADA
NONMAJOR YOUTH ACTIVITIES COUNSEL SPECIAL REVENUE FUND
SCHEDULE OF REVENUES, EXPENDITURES, AND CHANGES
IN FUND BALANCE - BUDGET (GAAP BASIS) AND ACTUAL
Year Ended June 30, 2020
(With Comparative Actual Amounts for Year Ended June 30, 2019)

	2020		Variance - Positive	2019
	Budget	Actual	(Negative)	Actual
Revenues:				
Miscellaneous:	$ -	$ -	$ -	$ -
Expenditures:				
Current:				
Community support:				
Services and supplies	6,007	-	6,007	-
Excess (deficiency) of revenues over expenditures	(6,007)	-	6,007	-
Fund balance:				
Beginning of year	6,007	6,007	-	6,007
End of year	$ -	$ 6,007	$ 6,007	$ 6,007

LINCOLN COUNTY, NEVADA
NONMAJOR GENETIC MARKER TESTING SPECIAL REVENUE FUND
COMPARATIVE BALANCE SHEETS
June 30, 2020 and 2019

	2020	2019
ASSETS		
Pooled cash and investments	$ 1,370	$ 4,285
LIABILITIES		
Accounts payable	$ 1,370	$ 4,285
FUND BALANCE		
Restricted	-	-
Total liabilities and fund balance	$ 1,370	$ 4,285

LINCOLN COUNTY, NEVADA
NONMAJOR GENETIC MARKER TESTING SPECIAL REVENUE FUND
SCHEDULE OF REVENUES, EXPENDITURES, AND CHANGES
IN FUND BALANCE - BUDGET (GAAP BASIS) AND ACTUAL
Year Ended June 30, 2020
(With Comparative Actual Amounts for Year Ended June 30, 2019)

	2020		Variance - Positive	2019
	Budget	Actual	(Negative)	Actual
Revenues:				
Charges for services:				
Other	$ 20,000	$ 10,372	$ (9,628)	$ 15,348
Expenditures:				
Current:				
General government:				
Services and supplies	20,000	10,372	9,628	16,690
Excess (deficiency) of revenues over expenditures	-	-	-	(1,342)
Fund balance:				
Beginning of year	-	-	-	1,342
End of year	$ -	$ -	$ -	$ -

LINCOLN COUNTY, NEVADA
NONMAJOR PUBLIC IMPROVEMENT SPECIAL REVENUE FUND
COMPARATIVE BALANCE SHEETS
June 30, 2020 and 2019

	2020	2019
ASSETS		
Pooled cash and investments	$ 149,107	$ 145,081
Interest receivable	241	319
Total assets	$ 149,348	$ 145,400
FUND BALANCE		
Restricted	$ 149,348	$ 145,400

LINCOLN COUNTY, NEVADA
NONMAJOR PUBLIC IMPROVEMENT SPECIAL REVENUE FUND
SCHEDULE OF REVENUES, EXPENDITURES, AND CHANGES
IN FUND BALANCE - BUDGET (GAAP BASIS) AND ACTUAL
Year Ended June 30, 2020
(With Comparative Actual Amounts for Year Ended June 30, 2019)

	2020		Variance - Positive	2019
	Budget	Actual	(Negative)	Actual
Revenues:				
Miscellaneous:				
Interest	$ -	$ 3,948	$ 3,948	$ 2,811
Expenditures:				
Current:				
Public works:				
Services and supplies	142,589	-	142,589	-
Excess (deficiency) of revenues over expenditures	(142,589)	3,948	146,537	2,811
Fund balance:				
Beginning of year	142,589	145,400	2,811	142,589
End of year	$ -	$ 149,348	$ 149,348	$ 145,400

LINCOLN COUNTY, NEVADA
NONMAJOR AIRPORT SPECIAL REVENUE FUND
COMPARATIVE BALANCE SHEETS
June 30, 2020 and 2019

	2020	2019
ASSETS		
Pooled cash and investments	$ 23,165	$ 1,036
Due from others	9,898	-
Inventory	8,091	-
Total assets	$ 41,154	$ 1,036
LIABILITIES		
Accounts payable	$ 9,608	$ 514
Accrued payroll and benefits	73	-
Total liabilities	9,681	514
FUND BALANCE		
Nonspendable	8,091	-
Committed	23,382	522
Total fund balance	31,473	522
Total liabilities and fund balance	$ 41,154	$ 1,036

LINCOLN COUNTY, NEVADA
NONMAJOR AIRPORT SPECIAL REVENUE FUND
SCHEDULE OF REVENUES, EXPENDITURES, AND CHANGES IN FUND BALANCE - BUDGET (GAAP BASIS) AND ACTUAL
Year Ended June 30, 2020
(With Comparative Actual Amounts for Year Ended June 30, 2019)

	2020 Budget	2020 Actual	Variance - Positive (Negative)	2019 Actual
Revenues:				
Charges for services:				
Airport fees	$ 18,500	$ 40,853	$ 22,353	$ 19,140
Miscellaneous:				
Rents	3,000	20,400	17,400	7,600
Other	10,000	-	(10,000)	-
Total miscellaneous	13,000	20,400	7,400	7,600
Total revenues	31,500	61,253	29,753	26,740
Expenditures:				
Current:				
Public works:				
Employee benefits	450	400	50	423
Services and supplies	28,900	29,902	(1,002)	25,526
Total expenditures	29,350	30,302	(952)	25,949
Excess (deficiency) of revenues over expenditures	2,150	30,951	28,801	791
Fund balance:				
Beginning of year	-	522	522	(269)
End of year	$ 2,150	$ 31,473	$ 29,323	$ 522

LINCOLN COUNTY, NEVADA
NONMAJOR PANACA TOWN BUILDING SPECIAL REVENUE FUND
COMPARATIVE BALANCE SHEETS
June 30, 2020 and 2019

	2020	2019
ASSETS		
Pooled cash and investments	$ 57,520	$ 56,265
Interest receivable	89	116
Total assets	$ 57,609	$ 56,381
LIABILITIES		
Accounts payable	$ -	$ -
FUND BALANCE		
Committed	57,609	56,381
Total liabilities and fund balance	$ 57,609	$ 56,381

LINCOLN COUNTY, NEVADA
NONMAJOR PANACA TOWN BUILDING SPECIAL REVENUE FUND
SCHEDULE OF REVENUES, EXPENDITURES, AND CHANGES
IN FUND BALANCE - BUDGET (GAAP BASIS) AND ACTUAL
Year Ended June 30, 2020
(With Comparative Actual Amounts for Year Ended June 30, 2019)

	2020 Budget	2020 Actual	Variance - Positive (Negative)	2019 Actual
Revenues:				
Miscellaneous:				
Rent	$ 10,500	$ 10,569	$ 69	$ 10,569
Investment income	-	1,459	1,459	1,024
Total revenues	10,500	12,028	1,528	11,593
Expenditures:				
Current:				
General government:				
Capital outlay	41,788	10,800	30,988	-
Excess (deficiency) of revenues over expenditures	(31,288)	1,228	32,516	11,593
Fund balance:				
Beginning of year	31,288	56,381	25,093	44,788
End of year	$ -	$ 57,609	$ 57,609	$ 56,381

LINCOLN COUNTY, NEVADA
NONMAJOR COURT FACILITY FEES SPECIAL REVENUE FUND
COMPARATIVE BALANCE SHEETS
June 30, 2020 and 2019

	2020	2019
ASSETS		
Pooled cash and investments	$ 135,935	$ 111,466
Interest receivable	224	214
Total assets	$ 136,159	$ 111,680
LIABILITIES		
Accounts payable	$ 45,191	$ -
FUND BALANCE		
Restricted	90,968	111,680
Total liabilities and fund balance	$ 136,159	$ 111,680

LINCOLN COUNTY, NEVADA
NONMAJOR COURT FACILITY FEES SPECIAL REVENUE FUND
SCHEDULE OF REVENUES, EXPENDITURES, AND CHANGES
IN FUND BALANCE - BUDGET (GAAP BASIS) AND ACTUAL
Year Ended June 30, 2020
(With Comparative Actual Amounts for Year Ended June 30, 2019)

	2020		Variance - Positive	2019
	Budget	Actual	(Negative)	Actual
Revenues:				
Charges for services:				
Other	$ 45,000	$ 33,511	$ (11,489)	$ 49,189
Miscellaneous:				
Investment income	-	3,653	3,653	1,882
Total revenues	45,000	37,164	(7,836)	51,071
Expenditures:				
Current:				
Judicial:				
Service and supplies	-	-	-	1,231
Capital outlay	63,040	57,876	5,164	7,200
Total expenditures	63,040	57,876	5,164	8,431
Excess (deficiency) of revenues over expenditures	(18,040)	(20,712)	(2,672)	42,640
Fund balance:				
Beginning of year	18,040	111,680	93,640	69,040
End of year	$ -	$ 90,968	$ 90,968	$ 111,680

LINCOLN COUNTY, NEVADA
NONMAJOR TRI-COUNTY WEED CONTROL SPECIAL REVENUE FUND
COMPARATIVE BALANCE SHEETS
June 30, 2020 and 2019

	2020	2019
ASSETS		
Pooled cash and investments	$ -	$ 249,082
Interest receivable	-	646
Total assets	$ -	$ 249,728
LIABILITIES		
Accounts payable	$ -	$ 56,390
Accrued payroll and benefits	-	21,339
Total liabilities	-	77,729
FUND BALANCE		
Restricted	-	171,999
Total liabilities and fund balance	$ -	$ 249,728

LINCOLN COUNTY, NEVADA
NONMAJOR TRI-COUNTY WEED CONTROL SPECIAL REVENUE FUND
SCHEDULE OF REVENUES, EXPENDITURES, AND CHANGES
IN FUND BALANCE - BUDGET (GAAP BASIS) AND ACTUAL
Year Ended June 30, 2020
(With Comparative Actual Amounts for Year Ended June 30, 2019)

	2020		Variance - Positive	2019
	Budget	Actual	(Negative)	Actual
Revenues:				
Charges for services:				
Weed control	$ 1,100,000	$ 327,615	$ (772,385)	$ 843,872
Miscellaneous:				
Investment income	400	879	479	5,696
Total revenues	1,100,400	328,494	(771,906)	849,568
Expenditures:				
Current:				
General government:				
Salaries and wages	409,150	85,251	323,899	284,065
Employee benefits	150,387	25,120	125,267	89,861
Services and supplies	503,564	76,269	427,295	494,481
Capital outlay	150,000	-	150,000	-
Total expenditures	1,213,101	186,640	1,026,461	868,407
Excess (deficiency) of revenues over expenditures	(112,701)	141,854	254,555	(18,839)
Other financing sources (uses):				
Disposal	-	(313,853)	(313,853)	-
Net change in fund balance	(112,701)	(171,999)	(59,298)	(18,839)
Fund balance:				
Beginning of year	112,701	171,999	59,298	190,838
End of year	$ -	$ -	$ -	$ 171,999

LINCOLN COUNTY, NEVADA
NONMAJOR LINCOLN COUNTY LAND ACT
GENERAL SPECIAL REVENUE FUND
COMPARATIVE BALANCE SHEETS
June 30, 2020 and 2019

	2020	2019
ASSETS		
Pooled cash and investments	$ 6,879	$ 6,693
Interest receivable	11	15
Total assets	$ 6,890	$ 6,708
FUND BALANCE		
Committed	$ 6,890	$ 6,708

LINCOLN COUNTY, NEVADA
NONMAJOR LINCOLN COUNTY LAND ACT
GENERAL SPECIAL REVENUE FUND
SCHEDULE OF REVENUES, EXPENDITURES, AND CHANGES IN FUND BALANCE - BUDGET (GAAP BASIS) AND ACTUAL
Year Ended June 30, 2020
(With Comparative Actual Amounts for Year Ended June 30, 2019)

	2020			
	Budget	Actual	Variance - Positive (Negative)	2019 Actual
Revenues:				
Miscellaneous:				
Investment income	$ -	$ 182	$ 182	$ 133
Expenditures:				
Current:				
General government:				
Services and supplies	6,575	-	6,575	-
Excess (deficiency) of revenues over expenditures	(6,575)	182	6,757	133
Fund balance:				
Beginning of year	6,575	6,708	133	6,575
End of year	$ -	$ 6,890	$ 6,890	$ 6,708

LINCOLN COUNTY, NEVADA
NONMAJOR LINCOLN COUNTY LAND ACT
PLANNING AND DEVELOPMENT SPECIAL REVENUE FUND
COMPARATIVE BALANCE SHEETS
June 30, 2020 and 2019

	2020	2019
ASSETS		
Pooled cash and investments	$ 700	$ 681
Interest receivable	1	2
Total assets	$ 701	$ 683
LIABILITIES		
Accounts payable	$ -	$ -
FUND BALANCE		
Committed	701	683
Total liabilities and fund balance	$ 701	$ 683

LINCOLN COUNTY, NEVADA
NONMAJOR LINCOLN COUNTY LAND ACT
PLANNING AND DEVELOPMENT SPECIAL REVENUE FUND
SCHEDULE OF REVENUES, EXPENDITURES, AND CHANGES
IN FUND BALANCE - BUDGET (GAAP BASIS) AND ACTUAL
Year Ended June 30, 2020
(With Comparative Actual Amounts for Year Ended June 30, 2019)

	2020			
	Budget	Actual	Variance - Positive (Negative)	2019 Actual
Revenues:				
Miscellaneous:				
Investment income	$ 100	$ 18	$ (82)	$ 15
Expenditures:				
Current:				
General government:				
Services and supplies	868	-	868	-
Net change in fund balance	(768)	18	786	15
Fund balance:				
Beginning of year	768	683	(85)	668
End of year	$ -	$ 701	$ 701	$ 683

LINCOLN COUNTY, NEVADA
NONMAJOR LINCOLN COUNTY LAND ACT
EDUCATION SPECIAL REVENUE FUND
COMPARATIVE BALANCE SHEETS
June 30, 2020 and 2019

	2020	2019
ASSETS		
Pooled cash and investments	$ 130,510	$ 126,986
Interest receivable	211	279
Total assets	$ 130,721	$ 127,265
LIABILITIES		
Accounts payable	$ -	$ -
FUND BALANCE		
Committed	130,721	127,265
Total liabilities and fund balance	$ 130,721	$ 127,265

LINCOLN COUNTY, NEVADA
NONMAJOR LINCOLN COUNTY LAND ACT
EDUCATION SPECIAL REVENUE FUND
SCHEDULE OF REVENUES, EXPENDITURES, AND CHANGES
IN FUND BALANCE - BUDGET (GAAP BASIS) AND ACTUAL
Year Ended June 30, 2020
(With Comparative Actual Amounts for Year Ended June 30, 2019)

	2020			
	Budget	Actual	Variance - Positive (Negative)	2019 Actual
Revenues:				
Miscellaneous:				
Investment income	$ -	$ 3,456	$ 3,456	$ 2,464
Expenditures:				
Current:				
General government:				
Services and supplies	12,500	-	12,500	-
Excess (deficiency) of revenues over expenditures	(12,500)	3,456	15,956	2,464
Fund balance:				
Beginning of year	124,801	127,265	2,464	124,801
End of year	$ 112,301	$ 130,721	$ 18,420	$ 127,265

LINCOLN COUNTY, NEVADA
NONMAJOR LINCOLN COUNTY LAND ACT
GRANT MATCH SPECIAL REVENUE FUND
COMPARATIVE BALANCE SHEETS
June 30, 2020 and 2019

	2020	2019
ASSETS		
Pooled cash and investments	$ -	$ 151
FUND BALANCE		
Committed	$ -	$ 151

LINCOLN COUNTY, NEVADA
NONMAJOR LINCOLN COUNTY LAND ACT
GRANT MATCH SPECIAL REVENUE FUND
SCHEDULE OF REVENUES, EXPENDITURES, AND CHANGES
IN FUND BALANCE - BUDGET (GAAP BASIS) AND ACTUAL
Year Ended June 30, 2020
(With Comparative Actual Amounts for Year Ended June 30, 2019)

	2020			
	Budget	Actual	Variance - Positive (Negative)	2019 Actual
Revenues:				
Miscellaneous:				
Investment income	$ -	$ -	$ -	$ -
Expenditures:				
Current:				
General government:				
Services and supplies	-	-	-	-
Excess (deficiency) of revenues over expenditures	-	-	-	-
Other financing sources (uses):				
Operating transfers out	(151)	(151)	-	-
Net change in fund balance	(151)	(151)	-	-
Fund balance:				
Beginning of year	151	151	-	151
End of year	$ -	$ -	$ -	$ 151

LINCOLN COUNTY, NEVADA
NONMAJOR LINCOLN COUNTY WATER
GENERAL SPECIAL REVENUE FUND
COMPARATIVE BALANCE SHEETS
June 30, 2020 and 2019

	2020	2019
ASSETS		
Pooled cash and investments	$ 633	$ 616
Interest receivable	1	2
Total assets	$ 634	$ 618
LIABILITIES		
Accounts payable	$ -	$ -
FUND BALANCE		
Committed	634	618
Total liabilities and fund balance	$ 634	$ 618

LINCOLN COUNTY, NEVADA
NONMAJOR LINCOLN COUNTY WATER
GENERAL SPECIAL REVENUE FUND
SCHEDULE OF REVENUES, EXPENDITURES, AND CHANGES
IN FUND BALANCE - BUDGET (GAAP BASIS) AND ACTUAL
Year Ended June 30, 2020
(With Comparative Actual Amounts for Year Ended June 30, 2019)

	2020		Variance - Positive	2019
	Budget	Actual	(Negative)	Actual
Revenues:				
Miscellaneous:				
Investment income	$ -	$ 16	$ 16	$ 10
Expenditures:				
Current:				
General government:				
Services and supplies	-	-	-	-
Net change in fund balance	-	16	16	10
Fund balance:				
Beginning of year	608	618	10	608
End of year	$ 608	$ 634	$ 26	$ 618

LINCOLN COUNTY, NEVADA
NONMAJOR LINCOLN COUNTY WATER
SPECIAL PROJECTS SPECIAL REVENUE FUND
COMPARATIVE BALANCE SHEETS
June 30, 2020 and 2019

	2020	2019
ASSETS		
Pooled cash and investments	$ 8,783	$ 8,546
Interest receivable	14	19
Total assets	$ 8,797	$ 8,565
FUND BALANCE		
Committed	$ 8,797	$ 8,565

LINCOLN COUNTY, NEVADA
NONMAJOR LINCOLN COUNTY WATER
SPECIAL PROJECTS SPECIAL REVENUE FUND
SCHEDULE OF REVENUES, EXPENDITURES, AND CHANGES
IN FUND BALANCE - BUDGET (GAAP BASIS) AND ACTUAL
Year Ended June 30, 2020
(With Comparative Actual Amounts for Year Ended June 30, 2019)

	2020			
	Budget	Actual	Variance - Positive (Negative)	2019 Actual
Revenues:				
Miscellaneous:				
Investment income	$ -	$ 232	$ 232	$ 167
Expenditures:				
Current:				
General government:				
Services and supplies	8,398	-	8,398	-
Excess (deficiency) of revenues over expenditures	(8,398)	232	8,630	167
Fund balance:				
Beginning of year	8,398	8,565	167	8,398
End of year	$ -	$ 8,797	$ 8,797	$ 8,565

LINCOLN COUNTY, NEVADA
NONMAJOR LINCOLN COUNTY WATER
PLANNING AND DEVELOPMENT SPECIAL REVENUE FUND
COMPARATIVE BALANCE SHEETS
June 30, 2020 and 2019

	2020	2019
ASSETS		
Pooled cash and investments	$ 87,123	$ 84,771
Interest receivable	141	186
Total assets	$ 87,264	$ 84,957
FUND BALANCE		
Committed	$ 87,264	$ 84,957

LINCOLN COUNTY, NEVADA
NONMAJOR LINCOLN COUNTY WATER
PLANNING AND DEVELOPMENT SPECIAL REVENUE FUND
SCHEDULE OF REVENUES, EXPENDITURES, AND CHANGES
IN FUND BALANCE - BUDGET (GAAP BASIS) AND ACTUAL
Year Ended June 30, 2020
(With Comparative Actual Amounts for Year Ended June 30, 2019)

	2020 Budget	2020 Actual	Variance - Positive (Negative)	2019 Actual
Revenues:				
Miscellaneous:				
Investment income	$ 50	$ 2,307	$ 2,257	$ 1,643
Expenditures:				
Current:				
General government:				
Services and supplies	83,414	-	83,414	-
Net change in fund balance	(83,364)	2,307	85,671	1,643
Fund balance:				
Beginning of year	83,364	84,957	1,593	83,314
End of year	$ -	$ 87,264	$ 87,264	$ 84,957

LINCOLN COUNTY, NEVADA
NONMAJOR LINCOLN COUNTY WATER SPECIAL USE SPECIAL REVENUE FUND
COMPARATIVE BALANCE SHEETS
June 30, 2020 and 2019

	2020	2019
ASSETS		
Pooled cash and investments	$ 1,239,861	$ 1,196,429
Interest receivable	2,006	2,629
Interfund receivable	170,000	180,000
Total assets	$ 1,411,867	$ 1,379,058
FUND BALANCE		
Committed	$ 1,411,867	$ 1,379,058

LINCOLN COUNTY, NEVADA
NONMAJOR LINCOLN COUNTY WATER SPECIAL USE SPECIAL REVENUE FUND
SCHEDULE OF REVENUES, EXPENDITURES, AND CHANGES
IN FUND BALANCE - BUDGET (GAAP BASIS) AND ACTUAL
Year Ended June 30, 2020
(With Comparative Actual Amounts for Year Ended June 30, 2019)

	2020		Variance - Positive	2019
	Budget	Actual	(Negative)	Actual
Revenues:				
Miscellaneous:				
Investment income	$ 500	$ 32,809	$ 32,309	$ 23,192
Expenditures:				
Current:				
General government:				
Services and supplies	172,548	-	172,548	-
Excess (deficiency) of revenues over expenditures	(172,048)	32,809	204,857	23,192
Fund balance:				
Beginning of year	1,356,366	1,379,058	22,692	1,355,866
End of year	$ 1,184,318	$ 1,411,867	$ 227,549	$ 1,379,058

LINCOLN COUNTY, NEVADA
NONMAJOR LINCOLN COUNTY WATER
GRANT MATCH SPECIAL REVENUE FUND
COMPARATIVE BALANCE SHEETS
June 30, 2020 and 2019

	2020	2019
ASSETS		
Pooled cash and investments	$ 87,057	$ 84,707
Interest receivable	141	186
Total assets	$ 87,198	$ 84,893
FUND BALANCE		
Committed	$ 87,198	$ 84,893

LINCOLN COUNTY, NEVADA
NONMAJOR LINCOLN COUNTY WATER
GRANT MATCH SPECIAL REVENUE FUND
SCHEDULE OF REVENUES, EXPENDITURES, AND CHANGES
IN FUND BALANCE - BUDGET (GAAP BASIS) AND ACTUAL
Year Ended June 30, 2020
(With Comparative Actual Amounts for Year Ended June 30, 2019)

	2020 Budget	2020 Actual	Variance - Positive (Negative)	2019 Actual
Revenues:				
Miscellaneous:				
Investment income	$ 150	$ 2,305	$ 2,155	$ 1,640
Expenditures:				
Current:				
General government:				
Services and supplies	83,553	-	83,553	-
Excess (deficiency) of revenues over expenditures	(83,403)	2,305	85,708	1,640
Fund balance:				
Beginning of year	83,403	84,893	1,490	83,253
End of year	$ -	$ 87,198	$ 87,198	$ 84,893

LINCOLN COUNTY, NEVADA
NONMAJOR LINCOLN COUNTY WATER DISTRICT
GENERAL SPECIAL REVENUE FUND
COMPARATIVE BALANCE SHEETS
June 30, 2020 and 2019

	2020	2019
ASSETS		
Pooled cash and investments	$ 326,139	$ 295,924
Interest receivable	1,067	1,062
Prepaid expenses	1,554	-
Total assets	$ 328,760	$ 296,986
LIABILITIES		
Accounts payable	$ 5,361	$ 8,651
Accrued payroll and benefits	6,766	6,715
Total liabilities	12,127	15,366
FUND BALANCE		
Committed	316,633	281,620
Total liabilities and fund balance	$ 328,760	$ 296,986

LINCOLN COUNTY, NEVADA
NONMAJOR LINCOLN COUNTY WATER DISTRICT
GENERAL SPECIAL REVENUE FUND
SCHEDULE OF REVENUES, EXPENDITURES, AND CHANGES IN FUND BALANCE - BUDGET (GAAP BASIS) AND ACTUAL
Year Ended June 30, 2020
(With Comparative Actual Amounts for Year Ended June 30, 2019)

	2020 Budget	2020 Actual	Variance - Positive (Negative)	2019 Actual
Revenues:				
Miscellaneous:				
Rent	$ -	$ 500	$ 500	$ 500
Investment income	-	12,338	12,338	8,693
Total revenues	-	12,838	12,838	9,193
Expenditures:				
Current:				
General government:				
Salaries and wages	90,000	85,070	4,930	81,149
Employee benefits	37,000	37,902	(902)	34,570
Services and supplies	153,000	54,853	98,147	38,303
Total general government	280,000	177,825	102,175	154,022
Excess (deficiency) of revenues over expenditures	(280,000)	(164,987)	115,013	(144,829)
Other financing sources (uses):				
Operating transfers in	200,000	200,000	-	-
Net change in fund balance	(80,000)	35,013	115,013	(144,829)
Fund balance:				
Beginning of year	126,175	281,620	155,445	426,449
End of year	$ 46,175	$ 316,633	$ 270,458	$ 281,620

LINCOLN COUNTY, NEVADA
NONMAJOR LINCOLN COUNTY WATER DISTRICT
PLANNING & DEVELOPMENT SPECIAL REVENUE FUND
COMPARATIVE BALANCE SHEETS
June 30, 2020 and 2019

	2020	2019
ASSETS		
Pooled cash and investments	$ 948,216	$ 902,932
Interest receivable	3,920	3,901
Total assets	$ 952,136	$ 906,833
LIABILITIES		
Accounts payable	$ -	$ -
FUND BALANCE		
Committed	952,136	906,833
Total liabilities and fund balance	$ 952,136	$ 906,833

LINCOLN COUNTY, NEVADA
NONMAJOR LINCOLN COUNTY WATER DISTRICT
PLANNING & DEVELOPMENT SPECIAL REVENUE FUND
SCHEDULE OF REVENUES, EXPENDITURES, AND CHANGES IN FUND BALANCE - BUDGET (GAAP BASIS) AND ACTUAL
Year Ended June 30, 2020
(With Comparative Actual Amounts for Year Ended June 30, 2019)

	2020 Budget	2020 Actual	Variance - Positive (Negative)	2019 Actual
Revenues:				
Miscellaneous:				
Investment income	$ 10,000	$ 45,303	$ 35,303	$ 31,918
Expenditures:				
Current:				
General government:				
Services and supplies	896,783	-	896,783	1,868
Excess (deficiency) of revenues over expenditures	(886,783)	45,303	932,086	30,050
Fund balance:				
Beginning of year	886,783	906,833	20,050	876,783
End of year	$ -	$ 952,136	$ 952,136	$ 906,833

LINCOLN COUNTY, NEVADA
NONMAJOR LINCOLN COUNTY WATER DISTRICT
SPECIAL PROJECTS SPECIAL REVENUE FUND
COMPARATIVE BALANCE SHEETS
June 30, 2020 and 2019

	2020	2019
ASSETS		
Pooled cash and investments	$ 698,566	$ 666,069
Interest receivable	2,813	2,800
Prepaid expenses	32,000	40,000
Total assets	$ 733,379	$ 708,869
LIABILITIES		
Accounts payable	$ -	$ -
FUND BALANCE		
Nonspendable	32,000	40,000
Committed	701,379	668,869
Total fund balance	733,379	708,869
Total liabilities and fund balance	$ 733,379	$ 708,869

LINCOLN COUNTY, NEVADA
NONMAJOR LINCOLN COUNTY WATER DISTRICT
SPECIAL PROJECTS SPECIAL REVENUE FUND
SCHEDULE OF REVENUES, EXPENDITURES, AND CHANGES IN FUND BALANCE - BUDGET (GAAP BASIS) AND ACTUAL
Year Ended June 30, 2020
(With Comparative Actual Amounts for Year Ended June 30, 2019)

	2020			
	Budget	Actual	Variance - Positive (Negative)	2019 Actual
Revenues:				
Miscellaneous:				
Other-capital improvement	$ 197,000	$ -	$ (197,000)	$ -
Investment income	6,000	32,510	26,510	22,911
Total revenues	203,000	32,510	(170,490)	22,911
Expenditures:				
Current:				
General government:				
Services and supplies	892,958	8,000	884,958	8,000
Excess (deficiency) of revenues over expenditures	(689,958)	24,510	714,468	14,911
Fund balance:				
Beginning of year	689,958	708,869	18,911	693,958
End of year	$ -	$ 733,379	$ 733,379	$ 708,869

LINCOLN COUNTY, NEVADA
NONMAJOR ASSESSOR TECHNOLOGY SPECIAL REVENUE FUND
COMPARATIVE BALANCE SHEETS
June 30, 2020 and 2019

	2020	2019
ASSETS		
Pooled cash and investments	$ 38,983	$ 44,771
LIABILITIES		
Accounts payable	$ -	$ 9,449
FUND BALANCE		
Restricted	38,983	35,322
Total liabilities and fund balance	$ 38,983	$ 44,771

LINCOLN COUNTY, NEVADA
NONMAJOR ASSESSOR TECHNOLOGY SPECIAL REVENUE FUND
SCHEDULE OF REVENUES, EXPENDITURES, AND CHANGES
IN FUND BALANCE - BUDGET (GAAP BASIS) AND ACTUAL
Year Ended June 30, 2020
(With Comparative Actual Amounts for Year Ended June 30, 2019)

	2020		Variance - Positive	2019
	Budget	Actual	(Negative)	Actual
Revenues:				
Charges for services:				
Other	$ 18,000	$ 13,661	$ (4,339)	$ 13,336
Expenditures:				
Current:				
General government:				
Services and supplies	-	10,000	(10,000)	3,170
Capital outlay	54,000	-	54,000	19,449
Total general government	54,000	10,000	44,000	22,619
Excess (deficiency) of revenues over expenditures	(36,000)	3,661	39,661	(9,283)
Fund balance:				
Beginning of year	36,000	35,322	(678)	44,605
End of year	$ -	$ 38,983	$ 38,983	$ 35,322

LINCOLN COUNTY, NEVADA
NONMAJOR DISTRICT COURT TECHNOLOGY SPECIAL REVENUE FUND
COMPARATIVE BALANCE SHEETS
June 30, 2020 and 2019

	2020	2019
ASSETS		
Pooled cash and investments	$ 5,120	$ 5,120
FUND BALANCE		
Restricted	$ 5,120	$ 5,120

LINCOLN COUNTY, NEVADA
NONMAJOR DISTRICT COURT TECHNOLOGY SPECIAL REVENUE FUND
SCHEDULE OF REVENUES, EXPENDITURES, AND CHANGES
IN FUND BALANCE - BUDGET (GAAP BASIS) AND ACTUAL
Year Ended June 30, 2020
(With Comparative Actual Amounts for Year Ended June 30, 2019)

	2020		Variance - Positive	2019
	Budget	Actual	(Negative)	Actual
Revenues:				
Charges for services:	$ -	$ -	$ -	$ -
Expenditures:				
Current:				
Judicial:				
Services and supplies	5,120	-	5,120	-
Excess (deficiency) of revenues over expenditures	(5,120)	-	5,120	-
Fund balance:				
Beginning of year	5,120	5,120	-	5,120
End of year	$ -	$ 5,120	$ 5,120	$ 5,120

LINCOLN COUNTY, NEVADA
NONMAJOR DISTRICT COURT SPECIALTY COURT SPECIAL REVENUE FUND
COMPARATIVE BALANCE SHEETS
June 30, 2020 and 2019

	2020	2019
ASSETS		
Pooled cash and investments	$ 9,902	$ 2,850
LIABILITIES		
Accounts payable	$ 1,177	$ 2,761
FUND BALANCE		
Restricted	8,725	89
Total liabilities and fund balance	$ 9,902	$ 2,850

LINCOLN COUNTY, NEVADA
NONMAJOR DISTRICT COURT SPECIALTY COURT SPECIAL REVENUE FUND
SCHEDULE OF REVENUES, EXPENDITURES, AND CHANGES
IN FUND BALANCE - BUDGET (GAAP BASIS) AND ACTUAL
Year Ended June 30, 2020
(With Comparative Actual Amounts for Year Ended June 30, 2019)

	2020 Budget	2020 Actual	Variance-Positive (Negative)	2019 Actual
Revenues:				
Charges for services:				
Clerk fees	$ 20,463	$ 9,686	$ (10,777)	$ 12,219
Expenditures:				
Judicial:				
Services and supplies	30,000	16,050	13,950	22,106
Excess (deficiency) of revenues over expenditures	(9,537)	(6,364)	3,173	(9,887)
Other financing sources (uses):				
Transfers in	-	15,000	(15,000)	-
Net change in fund balance	(9,537)	8,636	18,173	(9,887)
Fund balance:				
Beginning of year	9,537	89	(9,448)	9,976
End of year	$ -	$ 8,725	$ 8,725	$ 89

LINCOLN COUNTY, NEVADA
NONMAJOR COURT SECURITY FEE SPECIAL REVENUE FUND
COMPARATIVE BALANCE SHEETS
June 30, 2020 and 2019

	2020	2019
ASSETS		
Pooled cash and investments	$ 12,436	$ 10,990
Interest receivable	20	23
Total assets	$ 12,456	$ 11,013
FUND BALANCE		
Restricted	$ 12,456	$ 11,013

LINCOLN COUNTY, NEVADA
NONMAJOR COURT SECURITY FEE SPECIAL REVENUE FUND
SCHEDULE OF REVENUES, EXPENDITURES, AND CHANGES
IN FUND BALANCE - BUDGET (GAAP BASIS) AND ACTUAL
Year Ended June 30, 2020
(With Comparative Actual Amounts for Year Ended June 30, 2019)

	2020			2019
	Budget	Actual	Variance-Positive (Negative)	
Revenues:				
Charges for services:				
Clerk fees	$ 700	$ 1,120	$ 420	$ 1,100
Miscellaneous:				
Investment income	-	323	323	206
Total revenues	700	1,443	743	1,306
Expenditures:				
Judicial:				
Services and supplies	11,107	-	11,107	-
Excess (deficiency) of revenues over expenditures	(10,407)	1,443	11,850	1,306
Fund balance:				
Beginning of year	10,407	11,013	606	9,707
End of year	$ -	$ 12,456	$ 12,456	$ 11,013

LINCOLN COUNTY, NEVADA
NONMAJOR DISTRICT COURT ENRICHMENT SPECIAL REVENUE FUND
COMPARATIVE BALANCE SHEETS
June 30, 2020 and 2019

	2020	2019
ASSETS		
Pooled cash and investments	$ 57,383	$ 50,370
Interest receivable	91	105
Total assets	$ 57,474	$ 50,475
FUND BALANCE		
Restricted	$ 57,474	$ 50,475

LINCOLN COUNTY, NEVADA
NONMAJOR DISTRICT COURT ENRICHMENT SPECIAL REVENUE FUND
SCHEDULE OF REVENUES, EXPENDITURES, AND CHANGES
IN FUND BALANCE - BUDGET (GAAP BASIS) AND ACTUAL
Year Ended June 30, 2020
(With Comparative Actual Amounts for Year Ended June 30, 2019)

	2020			2019
	Budget	Actual	Variance-Positive (Negative)	
Revenues:				
Charges for services:				
Clerk fees	$ 3,500	$ 5,508	$ 2,008	$ 5,877
Miscellaneous:				
Investment income	-	1,491	1,491	929
Total revenues	3,500	6,999	3,499	6,806
Expenditures:				
Current:				
Judicial:				
Services and supplies	48,599	-	48,599	-
Excess (deficiency) of revenues over expenditures	(45,099)	6,999	52,098	6,806
Fund balance:				
Beginning of year	47,169	50,475	3,306	43,669
End of year	$ 2,070	$ 57,474	$ 55,404	$ 50,475

LINCOLN COUNTY, NEVADA
NONMAJOR DEMERIT POINT REDUCTION SPECIAL REVENUE FUND
BALANCE SHEET
June 30, 2020

	2020
ASSETS	
Pooled cash and investments	$ 1,837
LIABILITIES	
Accounts payable	$ -
FUND BALANCE	
Restricted	1,837
Total liabilities and fund balance	$ 1,837

LINCOLN COUNTY, NEVADA
NONMAJOR DEMERIT POINT REDUCTION SPECIAL REVENUE FUND
SCHEDULE OF REVENUES, EXPENDITURES, AND CHANGES
IN FUND BALANCE - BUDGET (GAAP BASIS) AND ACTUAL
Year Ended June 30, 2020

	2020 Budget	Actual	Variance-Positive (Negative)
Revenues:			
Charges for services:			
Clerk fees	$ 10,000	$ 1,837	$ (8,163)
Expenditures:			
Current:			
Judicial:			
Services and supplies	10,000	-	10,000
Excess (deficiency) of revenues over expenditures	-	1,837	1,837
Fund balance:			
Beginning of year	-	-	-
End of year	$ -	$ 1,837	$ 1,837

LINCOLN COUNTY, NEVADA
NONMAJOR FUND - PROPERTY MANAGEMENT SPECIAL REVENUE FUND
COMPARATIVE BALANCE SHEETS
June 30, 2020 and 2019

	2020	2019
ASSETS		
Pooled cash and investments	$ 81,586	$ 73,415
LIABILITIES		
Accounts payable	$ 5,787	$ 5,422
Accrued payroll and benefits	371	273
Total liabilities	6,158	5,695
FUND BALANCE		
Committed for general government	75,428	67,720
Total liabilities and fund balance	$ 81,586	$ 73,415

LINCOLN COUNTY, NEVADA
NONMAJOR FUND - PROPERTY MANAGEMENT SPECIAL REVENUE FUND
SCHEDULE OF REVENUES, EXPENDITURES, AND CHANGES
IN FUND BALANCE - BUDGET (GAAP BASIS) AND ACTUAL
Year Ended June 30, 2020
(With Comparative Actual Amounts for Year Ended June 30, 2019)

	2020		Variance-Positive	2019
	Budget	Actual	(Negative)	Actual
Revenues:				
Miscellaneous:				
Rent	$ 15,600	$ 14,200	$ (1,400)	$ 15,200
Expenditures:				
General government:				
Salaries and wages	20,346	18,429	1,917	15,167
Employee benefits	6,058	1,320	4,738	2,555
Services and supplies	33,464	26,743	6,721	25,016
Total expenditures	59,868	46,492	13,376	42,738
Excess (deficiency) of revenues over expenditures	(44,268)	(32,292)	11,976	(27,538)
Other financing sources (uses):				
Operating transfer in	40,000	40,000	-	40,000
Net change in fund balance	(4,268)	7,708	11,976	12,462
Fund balance:				
Beginning of year	52,290	67,720	15,430	55,258
End of year	$ 48,022	$ 75,428	$ 27,406	$ 67,720

INTERNALLY REPORTED
SPECIAL REVENUE FUNDS

The Lincoln County Stabilization Fund is used to account for activity intended to cover shortfalls between budgeted and actual General Fund revenues.

The Planning Department Fund is used to account for revenues and expenditures collected for planning and development within the County.

The Rachel Jones Memorial Cemetery Fund is used to account for the maintenance of the cemetery.

The Flood Control Fund is used to account for flood control needs.

The Special Projects Fund is used to account for funds special projects throughout the County.

The Lincoln County Land Act Emergency Disaster Fund is used to account for revenues received from land sales which are to be spent according to resolution specifications for emergency disaster relief.

The Lincoln County Water Emergency Disaster Fund is used to account for revenues received for the County's portion of water sales which are to be spent according to resolution specifications for emergency disaster relief.

LINCOLN COUNTY, NEVADA
INTERNALLY REPORTED (BUDGETARY BASIS) FUNDS REPORTED AS PART OF THE GENERAL FUND FOR EXTERNAL REPORTING PURPOSES
COMBINING BALANCE SHEET
June 30, 2020
(With Comparative Actual Amounts for 2019)

	Stabilization	Planning	Rachel Jones Memorial Cemetery	Flood Control	Special Projects	Lincoln County Land Act Emergency Disaster	Lincoln County Water Emergency Disaster	Totals 2020	Totals 2019
ASSETS									
Pooled cash and investments	$ 136,891	$ 52,455	$ 827	$ 39,015	$ 357,363	$ 9,386	$ 66,344	$ 662,281	$ 703,993
Interest receivable	222	96	-	-	602	22	107	1,049	1,158
Total assets	$ 137,113	$ 52,551	$ 827	$ 39,015	$ 357,965	$ 9,408	$ 66,451	$ 663,330	$ 705,151
LIABILITIES									
Accounts payable	$ -	$ 6,229	$ -	$ -	$ -	$ -	$ -	$ 6,229	$ 6,723
Accrued payroll and benefits	-	2,719	-	-	-	-	-	2,719	2,154
Total liabilities	-	8,948	-	-	-	-	-	8,948	8,877
FUND BALANCE									
Restricted for:									
Stabilization	137,113	-	-	-	-	-	-	137,113	133,488
Rachel Jones Cemetery	-	-	827	-	-	-	-	827	827
General government	-	-	-	-	357,965	-	-	357,965	356,424
Committed for:									
Planning	-	43,603	-	-	-	-	-	43,603	34,921
Flood Control	-	-	-	39,015	-	-	-	39,015	39,920
Land Act	-	-	-	-	-	9,408	-	9,408	65,999
Water	-	-	-	-	-	-	66,451	66,451	64,695
Total fund balance	137,113	43,603	827	39,015	357,965	9,408	66,451	654,382	696,274
Total liabilities and fund balance	$ 137,113	$ 52,551	$ 827	$ 39,015	$ 357,965	$ 9,408	$ 66,451	$ 663,330	$ 705,151

LINCOLN COUNTY, NEVADA
INTERNALLY REPORTED (BUDGETARY BASIS) FUNDS REPORTED AS PART OF THE GENERAL FUND FOR EXTERNAL REPORTING PURPOSES
COMBINING SCHEDULE OF REVENUES, EXPENDITURES, AND CHANGES IN FUND BALANCES
Year Ended June 30, 2020
(With Comparative Actual Amounts for Year Ended June 30, 2019)

	Stabilization	Planning	Rachel Jones Memorial Cemetery	Flood Control	Special Projects	Lincoln County Land Act Emergency Disaster	Lincoln County Water Emergency Disaster	Totals 2020	Totals 2019
Revenues:									
Charges for services	$ -	$ 14,833	$ -	$ -	$ -	$ -	$ -	$ 14,833	$ 12,385
Miscellaneous	3,625	1,566	-	-	22,976	357	1,756	30,280	10,211
Total revenues	3,625	16,399	-	-	22,976	357	1,756	45,113	22,596
Expenditures:									
General government	-	-	-	-	21,435	56,948	-	78,383	26,837
Public works	-	82,717	-	905	-	-	-	83,622	81,646
Total expenditures	-	82,717	-	905	21,435	56,948	-	162,005	108,483
Excess (deficiency) of revenues over expenditures	3,625	(66,318)	-	(905)	1,541	(56,591)	1,756	(116,892)	(85,887)
Other financing sources (uses):									
Operating transfers in	-	75,000	-	-	-	-	-	75,000	285,752
Operating transfers out	-	-	-	-	-	-	-	-	(40,000)
Total other financing sources (uses)	-	75,000	-	-	-	-	-	75,000	245,752
Net change in fund balance	3,625	8,682	-	(905)	1,541	(56,591)	1,756	(41,892)	159,865
Fund balance:									
Beginning of year	133,488	34,921	827	39,920	356,424	65,999	64,695	696,274	536,409
End of year	$ 137,113	$ 43,603	$ 827	$ 39,015	$ 357,965	$ 9,408	$ 66,451	$ 654,382	$ 696,274

LINCOLN COUNTY, NEVADA
STABILIZATION
INTERNALLY REPORTED (BUDGETARY BASIS) FUND REPORTED
AS PART OF THE GENERAL FUND FOR EXTERNAL REPORTING PURPOSES
COMPARATIVE BALANCE SHEETS
June 30, 2020 and 2019

	2020	2019
ASSETS		
Pooled cash and investments	$ 136,891	$ 133,195
Interest receivable	222	293
Total assets	$ 137,113	$ 133,488
FUND BALANCE		
Restricted for stabilization	$ 137,113	$ 133,488

LINCOLN COUNTY, NEVADA
STABILIZATION
INTERNALLY REPORTED (BUDGETARY BASIS) FUND REPORTED
AS PART OF THE GENERAL FUND FOR EXTERNAL REPORTING PURPOSES
SCHEDULE OF REVENUES, EXPENDITURES AND CHANGES IN FUND BALANCE
BUDGET (GAAP BASIS) AND ACTUAL
Year Ended June 30, 2020
(With Comparative Actual Amounts for Year Ended June 30, 2019)

	2020 Budget	2020 Actual	Variance - Positive (Negative)	2019 Actual
Revenues:				
Miscellaneous:				
Investment income	$ 250	$ 3,625	$ 3,375	$ 2,584
Expenditures:				
Current:				
General government:				
Service and supplies	131,404	-	131,404	-
Excess (deficiency) of revenues over expenditures	(131,154)	3,625	134,779	2,584
Fund balance:				
Beginning of year	131,154	133,488	2,334	130,904
End of year	$ -	$ 137,113	$ 137,113	$ 133,488

LINCOLN COUNTY, NEVADA
PLANNING
INTERNALLY REPORTED (BUDGETARY BASIS) FUND REPORTED
AS PART OF THE GENERAL FUND FOR EXTERNAL REPORTING PURPOSES
COMPARATIVE BALANCE SHEETS
June 30, 2020 and 2019

	2020	2019
ASSETS		
Pooled cash and investments	$ 52,455	$ 43,667
Interest receivable	96	131
Total assets	$ 52,551	$ 43,798
LIABILITIES		
Accounts payable	$ 6,229	$ 6,723
Accrued payroll and benefits	2,719	2,154
Total liabilities	8,948	8,877
FUND BALANCE		
Committed for planning	43,603	34,921
Total liabilities and fund balance	$ 52,551	$ 43,798

LINCOLN COUNTY, NEVADA
PLANNING
INTERNALLY REPORTED (BUDGETARY BASIS) FUND REPORTED AS PART OF THE GENERAL FUND FOR EXTERNAL REPORTING PURPOSES
SCHEDULE OF REVENUES, EXPENDITURES, AND CHANGES IN FUND BALANCE - BUDGET (GAAP BASIS) AND ACTUAL
Year Ended June 30, 2020
(With Comparative Actual Amounts for Year Ended June 30, 2019)

	2020 Budget	2020 Actual	Variance-Positive (Negative)	2019 Actual
Revenues:				
Charges for services:				
Planning fees	$ 10,500	$ 14,833	$ 4,333	$ 12,385
Miscellaneous:				
Investment income	-	1,566	1,566	1,156
Total revenues	10,500	16,399	5,899	13,541
Expenditures:				
Current:				
Public works:				
Salaries and wages	70,004	60,853	9,151	60,235
Employee benefits	23,779	14,669	9,110	13,557
Services and supplies	9,560	7,195	2,365	6,949
Total expenditures	103,343	82,717	20,626	80,741
Excess (deficiency) of revenues over expenditures	(92,843)	(66,318)	26,525	(67,200)
Other financing sources (uses):				
Operating transfer in	75,000	75,000	-	75,000
Net change in fund balance	(17,843)	8,682	26,525	7,800
Fund balance:				
Beginning of year	17,843	34,921	17,078	27,121
End of year	$ -	$ 43,603	$ 43,603	$ 34,921

LINCOLN COUNTY, NEVADA
RACHEL JONES MEMORIAL CEMETERY
INTERNALLY REPORTED (BUDGETARY BASIS) FUND REPORTED
AS PART OF THE GENERAL FUND FOR EXTERNAL REPORTING PURPOSES
COMPARATIVE BALANCE SHEETS
June 30, 2020 and 2019

	2020	2019
ASSETS		
Pooled cash and investments	$ 827	$ 827
FUND BALANCE		
Restricted for Rachel Jones Cemetery	$ 827	$ 827

LINCOLN COUNTY, NEVADA
RACHEL JONES MEMORIAL CEMETERY
INTERNALLY REPORTED (BUDGETARY BASIS) FUND REPORTED
AS PART OF THE GENERAL FUND FOR EXTERNAL REPORTING PURPOSES
SCHEDULE OF REVENUES, EXPENDITURES, AND CHANGES
IN FUND BALANCE - BUDGET (GAAP BASIS) AND ACTUAL
Year Ended June 30, 2020
(With Comparative Actual Amounts for Year Ended June 30, 2019)

	2020			
	Budget	Actual	Variance - Positive (Negative)	2019 Actual
Revenues:				
Miscellaneous:	$ -	$ -	$ -	$ -
Expenditures:				
Health:				
Services and supplies	827	-	827	-
Excess (deficiency) of revenues over expenditures	(827)	-	827	-
Fund balance:				
Beginning of year	827	827	-	827
End of year	$ -	$ 827	$ 827	$ 827

LINCOLN COUNTY, NEVADA
FLOOD CONTROL
INTERNALLY REPORTED (BUDGETARY BASIS) FUND REPORTED
AS PART OF THE GENERAL FUND FOR EXTERNAL REPORTING PURPOSES
COMPARATIVE BALANCE SHEETS
June 30, 2020 and 2019

	2020	2019
ASSETS		
Pooled cash and investments	$ 39,015	$ 39,920
LIABILITIES		
Accounts payable	$ -	$ -
FUND BALANCE		
Committed for flood control	39,015	39,920
Total liabilities and fund balance	$ 39,015	$ 39,920

LINCOLN COUNTY, NEVADA
FLOOD CONTROL
INTERNALLY REPORTED (BUDGETARY BASIS) FUND REPORTED
AS PART OF THE GENERAL FUND FOR EXTERNAL REPORTING PURPOSES
SCHEDULE OF REVENUES, EXPENDITURES, AND CHANGES
IN FUND BALANCE - BUDGET (GAAP BASIS) AND ACTUAL
Year Ended June 30, 2020
(With Comparative Actual Amounts for Year Ended June 30, 2019)

	2020 Budget	2020 Actual	Variance-Positive (Negative)	2019 Actual
Revenues:	$ -	$ -	$ -	$ -
Expenditures:				
Current:				
Public works:				
Services and supplies	20,000	905	19,095	905
Excess (deficiency) of revenues over expenditures	(20,000)	(905)	19,095	(905)
Fund balance:				
Beginning of year	20,825	39,920	19,095	40,825
End of year	$ 825	$ 39,015	$ 38,190	$ 39,920

LINCOLN COUNTY, NEVADA
SPECIAL PROJECTS
INTERNALLY REPORTED (BUDGETARY BASIS) FUND REPORTED
AS PART OF THE GENERAL FUND FOR EXTERNAL REPORTING PURPOSES
COMPARATIVE BALANCE SHEETS
June 30, 2020 and 2019

	2020	2019
ASSETS		
Pooled cash and investments	$ 357,363	$ 355,977
Interest receivable	602	447
Total assets	$ 357,965	$ 356,424
LIABILITIES		
Accounts payable	$ -	$ -
FUND BALANCE		
Restricted	357,965	356,424
Total liabilities and fund balance	$ 357,965	$ 356,424

LINCOLN COUNTY, NEVADA
SPECIAL PROJECTS
INTERNALLY REPORTED (BUDGETARY BASIS) FUND REPORTED
AS PART OF THE GENERAL FUND FOR EXTERNAL REPORTING PURPOSES
SCHEDULE OF REVENUES, EXPENDITURES, AND CHANGES
IN FUND BALANCE - BUDGET (GAAP BASIS) AND ACTUAL
Year Ended June 30, 2020
(With Comparative Actual Amounts for Year Ended June 30, 2019)

	2020 Budget	2020 Actual	Variance - Positive (Negative)	2019 Actual
Revenues:				
Miscellaneous:				
Investment Income	$ 2,400	$ 9,841	$ 7,441	$ 3,942
Other	-	13,135	13,135	-
	2,400	22,976	20,576	3,942
Expenditures:				
General government:				
Salaries and wages	-	-	-	4,929
Services and supplies	-	21,435	(21,435)	16,307
Capital outlay	570,000	-	570,000	5,601
Total expenditures	570,000	21,435	548,565	26,837
Excess (deficiency) of revenues over expenditures	(567,600)	1,541	569,141	(22,895)
Other financing sources (uses):				
Operating transfers in	208,911	-	(208,911)	210,752
Operating transfers out	-	-	-	(40,000)
Total other financing sources (uses)	208,911	-	(208,911)	170,752
Net change in fund balance	(358,689)	1,541	360,230	147,857
Fund balance:				
Beginning of year	358,689	356,424	(2,265)	208,567
End of year	$ -	$ 357,965	$ 357,965	$ 356,424

LINCOLN COUNTY, NEVADA
LINCOLN COUNTY LAND ACT EMERGENCY DISASTER
INTERNALLY REPORTED (BUDGETARY BASIS) FUND REPORTED
AS PART OF THE GENERAL FUND FOR EXTERNAL REPORTING PURPOSES
COMPARATIVE BALANCE SHEETS
June 30, 2020 and 2019

	2020	2019
ASSETS		
Pooled cash and investments	$ 9,386	$ 65,854
Interest receivable	22	145
Total assets	$ 9,408	$ 65,999
LIABILITIES		
Accounts payable	$ -	$ -
FUND BALANCE		
Committed	9,408	65,999
Total liabilities and fund balance	$ 9,408	$ 65,999

LINCOLN COUNTY, NEVADA
LINCOLN COUNTY LAND ACT EMERGENCY DISASTER
INTERNALLY REPORTED (BUDGETARY BASIS) FUND REPORTED
AS PART OF THE GENERAL FUND FOR EXTERNAL REPORTING PURPOSES
SCHEDULE OF REVENUES, EXPENDITURES, AND CHANGES
IN FUND BALANCE - BUDGET (GAAP BASIS) AND ACTUAL
Year Ended June 30, 2020
(With Comparative Actual Amounts for Year Ended June 30, 2019)

	2020		Variance - Positive	2019
	Budget	Actual	(Negative)	Actual
Revenues:				
Miscellaneous:				
Investment income	$ -	$ 357	$ 357	$ 1,276
Expenditures:				
Current:				
General government:				
Services and supplies	64,723	56,948	7,775	-
Excess (deficiency) of revenues over expenditures	(64,723)	(56,591)	8,132	1,276
Fund balance:				
Beginning of year	64,723	65,999	1,276	64,723
End of year	$ -	$ 9,408	$ 9,408	$ 65,999

LINCOLN COUNTY, NEVADA
LINCOLN COUNTY WATER EMERGENCY DISASTER
INTERNALLY REPORTED (BUDGETARY BASIS) FUND REPORTED
AS PART OF THE GENERAL FUND FOR EXTERNAL REPORTING PURPOSES
COMPARATIVE BALANCE SHEETS
June 30, 2020 and 2019

	2020	2019
ASSETS		
Pooled cash and investments	$ 66,344	$ 64,553
Interest receivable	107	142
Total assets	$ 66,451	$ 64,695
FUND BALANCE		
Committed	$ 66,451	$ 64,695

LINCOLN COUNTY, NEVADA
LINCOLN COUNTY WATER EMERGENCY DISASTER
INTERNALLY REPORTED (BUDGETARY BASIS) FUND REPORTED
AS PART OF THE GENERAL FUND FOR EXTERNAL REPORTING PURPOSES
SCHEDULE OF REVENUES, EXPENDITURES, AND CHANGES
IN FUND BALANCE - BUDGET (GAAP BASIS) AND ACTUAL
Year Ended June 30, 2020
(With Comparative Actual Amounts for Year Ended June 30, 2019)

	2020 Budget	2020 Actual	Variance - Positive (Negative)	2019 Actual
Revenues:				
Miscellaneous:				
Investment income	$ 100	$ 1,756	$ 1,656	$ 1,253
Expenditures:				
Current:				
General government:				
Services and supplies	63,642	-	63,642	-
Excess (deficiency) of revenues over expenditures	(63,542)	1,756	65,298	1,253
Fund balance:				
Beginning of year	63,542	64,695	1,153	63,442
End of year	$ -	$ 66,451	$ 66,451	$ 64,695

NONMAJOR CAPITAL PROJECTS FUNDS

Capital Projects Funds are used to account for the acquisition and construction of major capital facilities other than those financed by proprietary funds.

The Capital Improvements Fund is used to account for the acquisition and construction of fixed assets in Lincoln County.

The Pioche Town Grant Fund is used to account for the acquisition and construction of fixed assets for the unincorporated town of Pioche, Nevada.

The Pioche Town, Alamo Town, and Panaca Town Funds are used to account for the capital acquisition tax levy.

The Ambulance Fund is used to account for monies being accumulated for the purchase of County ambulances.

The Fair Board Fund is used to account for revenues and expenditures for future fairground improvements.

The Vehicle Capital Projects Fund is used to account for the lease/purchase of equipment and vehicles for various County departments.

The Road Equipment Fund is used to account for monies transferred from the road fund to be accumulated and used for the purchase of heavy road equipment.

The Airport Fund is used to account for construction of facilities at the airport in Panaca, Nevada.

The Lincoln County Land Act Fund is used to account for land sale monies for capital purchases for the County.

The Lincoln County Water Fund is used to account for monies received for the County's portion of water sales within the district to be spent on capital purchases for the County.

The Lincoln County Water District Fund is used to account for monies received for water sales within the district to be spent on capital purchases for the Water District, which is a blended component unit of the County.

LINCOLN COUNTY, NEVADA
NONMAJOR CAPITAL PROJECTS FUNDS
COMBINING BALANCE SHEET
June 30, 2020
(With Comparative Totals for June 30, 2019)

	Capital Improvements	Pioche Town Grant	Pioche Town	Alamo Town	Panaca Town	Ambulance	Fair Board	Vehicle	Road Equipment	Airport	Lincoln County Land Act
ASSETS											
Pooled cash and investments	$ 794	$ 11,958	$ 55,280	$ 21,551	$ 23,319	$ 12,544	$ 17,365	$ 227	$ 292,983	$ 3,126	$ 31,190
Interest receivable	101	21	217	82	85	49	88	28	455	14	50
Taxes receivable	1,555	-	-	-	-	-	-	-	-	-	-
Special assessment receivable	-	-	-	-	-	-	-	-	-	-	-
Total assets	$ 2,450	$ 11,979	$ 55,497	$ 21,633	$ 23,404	$ 12,593	$ 17,453	$ 255	$ 293,438	$ 3,140	$ 31,240
LIABILITIES											
Accounts payable	$ -	$ -	$ -	$ -	$ -	$ -	$ -	$ -	$ -	$ -	$ -
DEFERRED INFLOWS OF RESOURCES											
Unavailable revenue - property taxes	1,359	-	-	-	-	-	-	-	-	-	-
FUND BALANCE											
Restricted for:											
Capital projects	1,091	11,979	55,497	21,633	23,404	12,593	17,453	255	293,438	3,140	31,240
Total liabilities, deferred inflows of resources, and fund balance	$ 2,450	$ 11,979	$ 55,497	$ 21,633	$ 23,404	$ 12,593	$ 17,453	$ 255	$ 293,438	$ 3,140	$ 31,240

LINCOLN COUNTY, NEVADA
NONMAJOR CAPITAL PROJECTS FUNDS
COMBINING BALANCE SHEET
June 30, 2020
(With Comparative Totals for June 30, 2019)

	Lincoln County Water	Lincoln County Water District	Totals 2020	2019
ASSETS				
Pooled cash and investments	$ 82,414	$ 858,129	$ 1,410,880	$ 1,167,660
Interest receivable	133	3,548	4,871	4,089
Taxes receivable	-	-	1,555	1,715
Special assessment receivable	-	79,764	79,764	-
Total assets	$ 82,547	$ 941,441	$ 1,497,070	$ 1,173,464
LIABILITIES				
Accounts payable	$ -	$ -	$ -	$ 201
DEFERRED INFLOWS OF RESOURCES				
Unavailable revenue - property taxes	-	-	1,359	1,360
FUND BALANCE				
Restricted for:				
Capital projects	82,547	941,441	1,495,711	1,171,903
Total liabilities, deferred inflows of resources, and fund balance	$ 82,547	$ 941,441	$ 1,497,070	$ 1,173,464

LINCOLN COUNTY, NEVADA
NONMAJOR CAPITAL PROJECTS FUNDS
COMBINING SCHEDULE OF REVENUES, EXPENDITURES,
AND CHANGES IN FUND BALANCE
Year Ended June 30, 2020
(With Comparative Actual Amounts for Year Ended June 30, 2019)

	Capital Improvements	Pioche Town Grant	Pioche Town	Alamo Town	Panaca Town	Ambulance	Fair Board	Vehicle	Road Equipment	Airport	Lincoln County Land Act
Revenues:											
Taxes	$ 116,425	$ -	$ -	$ -	$ -	$ -	$ -	$ -	$ -	$ -	$ -
Intergovernmental	109	-	-	-	-	-	-	-	-	-	-
Special assessment	-	-	-	-	-	-	-	-	-	-	-
Miscellaneous	862	345	1,826	690	3,716	412	738	232	7,447	121	825
Total revenues	117,396	345	1,826	690	3,716	412	738	232	7,447	121	825
Expenditures:											
Current:											
Intergovernmental	8,169	-	-	-	-	-	-	-	-	-	-
Capital projects	-	2,650	3,752	-	-	-	7,285	135,117	-	-	-
Debt service:											
Principal	-	-	-	-	-	-	-	77,642	-	-	-
Interest	-	-	-	-	-	-	-	5,269	-	-	-
Total expenditures	8,169	2,650	3,752	-	-	-	7,285	218,028	-	-	-
Excess (deficiency) of revenues over expenditures	109,227	(2,305)	(1,926)	690	3,716	412	(6,547)	(217,796)	7,447	121	825
Other financing sources (uses):											
Operating transfers in	-	-	3,502	2,334	4,667	-	-	110,000	100,000	-	-
Operating transfers out	(120,503)	-	-	-	-	-	-	-	-	-	-
Capital lease proceeds	-	-	-	-	-	-	-	100,300	-	-	-
Total other financing sources (uses)	(120,503)	-	3,502	2,334	4,667	-	-	210,300	100,000	-	-
Net change in fund balance	(11,276)	(2,305)	1,576	3,024	8,383	412	(6,547)	(7,496)	107,447	121	825
Fund balance:											
Beginning of year	12,367	14,284	53,921	18,609	15,021	12,181	24,000	7,751	185,991	3,019	30,415
End of year	$ 1,091	$ 11,979	$ 55,497	$ 21,633	$ 23,404	$ 12,593	$ 17,453	$ 255	$ 293,438	$ 3,140	$ 31,240

LINCOLN COUNTY, NEVADA
NONMAJOR CAPITAL PROJECTS FUNDS
COMBINING SCHEDULE OF REVENUES, EXPENDITURES,
AND CHANGES IN FUND BALANCE
Year Ended June 30, 2020
(With Comparative Actual Amounts for Year Ended June 30, 2019)

	Lincoln County Water	Lincoln County Water District	Totals 2020	Totals 2019
Revenues:				
Taxes	$ -	$ -	$ 116,425	$ 114,793
Intergovernmental	-	-	109	126
Special assessment	-	186,003	186,003	-
Miscellaneous	2,182	41,459	60,855	34,117
Total revenues	2,182	227,462	363,392	149,036
Expenditures:				
Current:				
Intergovernmental	-	-	8,169	8,040
Capital projects	-	-	148,804	197,326
Debt service:				
Principal	-	-	77,642	77,146
Interest	-	-	5,269	1,834
Total expenditures	-	-	239,884	284,346
Excess (deficiency) of revenues over expenditures	2,182	227,462	123,508	(135,310)
Other financing sources (uses):				
Operating transfers in	-	-	220,503	231,338
Operating transfers out	-	-	(120,503)	(131,338)
Capital lease proceeds	-	-	100,300	133,245
Total other financing sources (uses)	-	-	200,300	233,245
Net change in fund balance	2,182	227,462	323,808	97,935
Fund balance:				
Beginning of year	80,365	713,979	1,171,903	1,073,968
End of year	$ 82,547	$ 941,441	$ 1,495,711	$ 1,171,903

LINCOLN COUNTY, NEVADA
NONMAJOR CAPITAL IMPROVEMENTS CAPITAL PROJECTS FUND
COMPARATIVE BALANCE SHEETS
June 30, 2020 and 2019

	2020	2019
ASSETS		
Pooled cash and investments	$ 794	$ 11,980
Interest receivable	101	32
Taxes receivable	1,555	1,715
Total assets	$ 2,450	$ 13,727
LIABILITIES		
Accounts payable	$ -	$ -
DEFERRED INFLOWS OF RESOURCES		
Unavailable revenue - property taxes	1,359	1,360
FUND BALANCE		
Restricted	1,091	12,367
Total liabilities, deferred inflows of resources, and fund balance	$ 2,450	$ 13,727

LINCOLN COUNTY, NEVADA
NONMAJOR CAPITAL IMPROVEMENTS CAPITAL PROJECTS FUND
SCHEDULE OF REVENUES, EXPENDITURES, AND CHANGES
IN FUND BALANCE - BUDGET (GAAP BASIS) AND ACTUAL
Year Ended June 30, 2020
(With Comparative Actual Amounts for Year Ended June 30, 2019)

	2020 Budget	2020 Actual	Variance - Positive (Negative)	2019 Actual
Revenues:				
Taxes:				
Property taxes	$ 119,291	$ 116,425	$ (2,866)	$ 114,793
Intergovernmental:				
Fish and wildlife	-	109	109	126
Miscellaneous:				
Investment income	-	862	862	282
Total revenues	119,291	117,396	(1,895)	115,201
Expenditures:				
Current:				
Intergovernmental	19,090	8,169	10,921	8,040
Excess (deficiency) of revenues over expenditures	100,201	109,227	9,026	107,161
Other financing sources (uses) :				
Operating transfers out	(111,270)	(120,503)	(9,233)	(131,338)
Net change in fund balance	(11,069)	(11,276)	(207)	(24,177)
Fund balance:				
Beginning of year	11,069	12,367	1,298	36,544
End of year	$ -	$ 1,091	$ 1,091	$ 12,367

LINCOLN COUNTY, NEVADA
NONMAJOR PIOCHE TOWN GRANT CAPITAL PROJECTS FUND
COMPARATIVE BALANCE SHEETS
June 30, 2020 and 2019

	2020	2019
ASSETS		
Pooled cash and investments	$ 11,958	$ 14,253
Interest receivable	21	31
Total assets	$ 11,979	$ 14,284
LIABILITIES		
Accounts payable	$ -	$ -
FUND BALANCE		
Restricted	11,979	14,284
Total liabilities and fund balance	$ 11,979	$ 14,284

LINCOLN COUNTY, NEVADA
NONMAJOR PIOCHE TOWN GRANT CAPITAL PROJECTS FUND
SCHEDULE OF REVENUES, EXPENDITURES, AND CHANGES
IN FUND BALANCE - BUDGET (GAAP BASIS) AND ACTUAL
Year Ended June 30, 2020
(With Comparative Actual Amounts for Year Ended June 30, 2019)

	2020			
	Budget	Actual	Variance - Positive (Negative)	2019 Actual
Revenues:				
Miscellaneous:				
Investment income	$ -	$ 345	$ 345	$ 277
Expenditures:				
Current:				
Capital projects:				
Capital outlay	24,007	2,650	21,357	-
Excess (deficiency) of revenues over expenditures	(24,007)	(2,305)	21,702	277
Other financing sources (uses):				
Operating transfers in	10,000	-	(10,000)	-
Net change in fund balance	(14,007)	(2,305)	11,702	277
Fund balance:				
Beginning of year	14,007	14,284	277	14,007
End of year	$ -	$ 11,979	$ 11,979	$ 14,284

LINCOLN COUNTY, NEVADA
NONMAJOR PIOCHE TOWN CAPITAL PROJECTS FUND
COMPARATIVE BALANCE SHEETS
June 30, 2020 and 2019

	2020	2019
ASSETS		
Pooled cash and investments	$ 55,280	$ 53,806
Interest receivable	217	115
Total assets	$ 55,497	$ 53,921
LIABILITIES		
Accounts payable	$ -	$ -
FUND BALANCE		
Restricted	55,497	53,921
Total liabilities and fund balance	$ 55,497	$ 53,921

LINCOLN COUNTY, NEVADA
NONMAJOR PIOCHE TOWN CAPITAL PROJECTS FUND
SCHEDULE OF REVENUES, EXPENDITURES, AND CHANGES IN FUND BALANCE - BUDGET (GAAP BASIS) AND ACTUAL
Year Ended June 30, 2020
(With Comparative Actual Amounts for Year Ended June 30, 2019)

	2020		Variance - Positive	2019
	Budget	Actual	(Negative)	Actual
Revenues:				
Miscellaneous:				
Investment income	$ -	$ 1,826	$ 1,826	$ 1,017
Expenditures:				
Current:				
Capital projects:				
Capital outlay	71,609	3,752	67,857	-
Excess (deficiency) of revenues over expenditures	(71,609)	(1,926)	69,683	1,017
Other financing sources (uses):				
Operating transfers in	15,656	3,502	(12,154)	3,446
Net change in fund balance	(55,953)	1,576	57,529	4,463
Fund balance:				
Beginning of year	55,953	53,921	(2,032)	49,458
End of year	$ -	$ 55,497	$ 55,497	$ 53,921

LINCOLN COUNTY, NEVADA
NONMAJOR ALAMO TOWN CAPITAL PROJECTS FUND
COMPARATIVE BALANCE SHEETS
June 30, 2020 and 2019

	2020	2019
ASSETS		
Pooled cash and investments	$ 21,551	$ 18,562
Interest receivable	82	47
Total assets	$ 21,633	$ 18,609
LIABILITIES		
Accounts payable	$ -	$ -
FUND BALANCE		
Restricted	21,633	18,609
Total liabilities and fund balance	$ 21,633	$ 18,609

LINCOLN COUNTY, NEVADA
NONMAJOR ALAMO TOWN CAPITAL PROJECTS FUND
SCHEDULE OF REVENUES, EXPENDITURES, AND CHANGES IN FUND BALANCE - BUDGET (GAAP BASIS) AND ACTUAL
Year Ended June 30, 2020
(With Comparative Actual Amounts for Year Ended June 30, 2019)

	2020			2019
	Budget	Actual	Variance - Positive (Negative)	Actual
Revenues:				
Miscellaneous:				
Investment income	$ 100	$ 690	$ 590	$ 417
Expenditures:				
Current:				
Capital projects:				
Capital outlay	14,562	-	14,562	-
Excess (deficiency) of revenues over expenditures	(14,462)	690	15,152	417
Other financing sources (uses):				
Operating transfers in	2,387	2,334	(53)	2,297
Net change in fund balance	(12,075)	3,024	15,099	2,714
Fund balance:				
Beginning of year	12,075	18,609	6,534	15,895
End of year	$ -	$ 21,633	$ 21,633	$ 18,609

LINCOLN COUNTY, NEVADA
NONMAJOR PANACA TOWN CAPITAL PROJECTS FUND
COMPARATIVE BALANCE SHEETS
June 30, 2020 and 2019

	2020	2019
ASSETS		
Pooled cash and investments	$ 23,319	$ 14,983
Interest receivable	85	38
Total assets	$ 23,404	$ 15,021
LIABILITIES		
Accounts payable	$ -	$ -
FUND BALANCE		
Restricted	23,404	15,021
Total liabilities and fund balance	$ 23,404	$ 15,021

LINCOLN COUNTY, NEVADA
NONMAJOR PANACA TOWN CAPITAL PROJECTS FUND
SCHEDULE OF REVENUES, EXPENDITURES, AND CHANGES
IN FUND BALANCE - BUDGET (GAAP BASIS) AND ACTUAL
Year Ended June 30, 2020
(With Comparative Actual Amounts for Year Ended June 30, 2019)

	2020		Variance - Positive	2019
	Budget	Actual	(Negative)	Actual
Revenues:				
Miscellaneous:				
Investment income	$ 10	$ 716	$ 706	$ 332
Donation	-	3,000	3,000	-
Total revenues	10	3,716	3,706	332
Expenditures:				
Current:				
Capital projects:				
Services and supplies	-	-	-	1,378
Capital outlay	11,812	-	11,812	-
Total expenditures	11,812	-	11,812	1,378
Excess (deficiency) of revenues over expenditures	(11,802)	3,716	15,518	(1,046)
Other financing sources (uses):				
Operating transfers in	4,771	4,667	(104)	4,595
Net change in fund balance	(7,031)	8,383	15,414	3,549
Fund balance:				
Beginning of year	7,031	15,021	7,990	11,472
End of year	$ -	$ 23,404	$ 23,404	$ 15,021

LINCOLN COUNTY, NEVADA
NONMAJOR AMBULANCE CAPITAL PROJECTS FUND
COMPARATIVE BALANCE SHEETS
June 30, 2020 and 2019

	2020	2019
ASSETS		
Pooled cash and investments	$ 12,544	$ 12,153
Interest receivable	49	28
Total assets	$ 12,593	$ 12,181
LIABILITIES		
Accounts payable	$ -	$ -
FUND BALANCE		
Restricted	12,593	12,181
Total liabilities and fund balance	$ 12,593	$ 12,181

LINCOLN COUNTY, NEVADA
NONMAJOR AMBULANCE CAPITAL PROJECTS FUND
SCHEDULE OF REVENUES, EXPENDITURES, AND CHANGES IN FUND BALANCE - BUDGET (GAAP BASIS) AND ACTUAL
Year Ended June 30, 2020
(With Comparative Actual Amounts for Year Ended June 30, 2019)

	2020		Variance-Positive	2019
	Budget	Actual	(Negative)	Actual
Miscellaneous:				
Investment income	$ -	$ 412	$ 412	$ 249
Expenditures:				
Current:				
Capital projects:				
Capital outlay	11,932	-	11,932	-
Excess (deficiency) of revenues over expenditures	(11,932)	412	12,344	249
Fund balance:				
Beginning of year	11,932	12,181	249	11,932
End of year	$ -	$ 12,593	$ 12,593	$ 12,181

LINCOLN COUNTY, NEVADA
NONMAJOR FAIR BOARD CAPITAL PROJECTS FUND
COMPARATIVE BALANCE SHEETS
June 30, 2020 and 2019

	2020	2019
ASSETS		
Pooled cash and investments	$ 17,365	$ 24,145
Interest receivable	88	56
Total assets	$ 17,453	$ 24,201
LIABILITIES		
Accounts payable	$ -	$ 201
FUND BALANCE		
Restricted	17,453	24,000
Total liabilities and fund balance	$ 17,453	$ 24,201

LINCOLN COUNTY, NEVADA
NONMAJOR FAIR BOARD CAPITAL PROJECTS FUND
SCHEDULE OF REVENUES, EXPENDITURES, AND CHANGES IN FUND BALANCE - BUDGET (GAAP BASIS) AND ACTUAL
Year Ended June 30, 2020
(With Comparative Actual Amounts for Year Ended June 30, 2019)

	2020		Variance - Positive	2019
	Budget	Actual	(Negative)	Actual
Revenues:				
Miscellaneous:				
Investment income	$ 200	$ 738	$ 538	$ 497
Expenditures:				
Current:				
Capital projects:				
Services and supplies	-	2,285	(2,285)	912
Capital outlay	23,829	5,000	18,829	5,000
Total expenditures	23,829	7,285	16,544	5,912
Excess (deficiency) of revenues over expenditures	(23,629)	(6,547)	17,082	(5,415)
Fund balance:				
Beginning of year	23,629	24,000	371	29,415
End of year	$ -	$ 17,453	$ 17,453	$ 24,000

LINCOLN COUNTY, NEVADA
NONMAJOR VEHICLE CAPITAL PROJECTS FUND
COMPARATIVE BALANCE SHEETS
June 30, 2020 and 2019

	2020	2019
ASSETS		
Pooled cash and investments	$ 227	$ 7,728
Interest receivable	28	23
Total assets	$ 255	$ 7,751
LIABILITIES		
Accounts payable	$ -	$ -
FUND BALANCE		
Restricted	255	7,751
Total liabilities and fund balance	$ 255	$ 7,751

LINCOLN COUNTY, NEVADA
NONMAJOR VEHICLE CAPITAL PROJECTS FUND
SCHEDULE OF REVENUES, EXPENDITURES, AND CHANGES IN FUND BALANCE - BUDGET (GAAP BASIS) AND ACTUAL
Year Ended June 30, 2020
(With Comparative Actual Amounts for Year Ended June 30, 2019)

	2020		Variance - Positive	2019
	Budget	Actual	(Negative)	Actual
Revenues:				
Miscellaneous:				
Investment income	$ -	$ 232	$ 232	$ 201
Expenditures:				
Current:				
Capital projects:				
Capital outlay	169,851	135,117	34,734	181,144
Debt service:				
Principal	47,180	77,642	(30,462)	77,146
Interest	5,269	5,269	-	1,834
Total debt service	52,449	82,911	(30,462)	78,980
Total expenditures	222,300	218,028	4,272	260,124
Excess (deficiency) of revenues over expenditures	(222,300)	(217,796)	4,504	(259,923)
Other financing sources (uses):				
Operating transfers in	111,270	110,000	(1,270)	121,000
Sale of capital assets	10,000	-	(10,000)	-
Capital lease proceeds	100,300	100,300	-	133,245
Total other financing sources (uses)	221,570	210,300	(11,270)	254,245
Net change in fund balance	(730)	(7,496)	(6,766)	(5,678)
Fund balance:				
Beginning of year	2,336	7,751	5,415	13,429
End of year	$ 1,606	$ 255	$ (1,351)	$ 7,751

LINCOLN COUNTY, NEVADA
NONMAJOR ROAD EQUIPMENT CAPITAL PROJECTS FUND
COMPARATIVE BALANCE SHEETS
June 30, 2020 and 2019

	2020	2019
ASSETS		
Pooled cash and investments	$ 292,983	$ 185,592
Interest receivable	455	399
Total assets	$ 293,438	$ 185,991
FUND BALANCE		
Restricted	$ 293,438	$ 185,991

LINCOLN COUNTY, NEVADA
NONMAJOR ROAD EQUIPMENT CAPITAL PROJECTS FUND
SCHEDULE OF REVENUES, EXPENDITURES, AND CHANGES IN FUND BALANCE - BUDGET (GAAP BASIS) AND ACTUAL
Year Ended June 30, 2020
(With Comparative Actual Amounts for Year Ended June 30, 2019)

	2020			2019
	Budget	Actual	Variance - Positive (Negative)	Actual
Revenues:				
Miscellaneous:				
Investment income	$ -	$ 7,447	$ 7,447	$ 3,521
Expenditures:				
Current:				
Capital projects:				
Capital outlay	200,000	-	200,000	-
Excess (deficiency) of revenues over expenditures	(200,000)	7,447	207,447	3,521
Other financing sources (uses):				
Operating transfers in	100,000	100,000	-	100,000
Net change in fund balance	(100,000)	107,447	207,447	103,521
Fund balance:				
Beginning of year	100,000	185,991	85,991	82,470
End of year	$ -	$ 293,438	$ 293,438	$ 185,991

LINCOLN COUNTY, NEVADA
NONMAJOR AIRPORT CAPITAL PROJECTS FUND
COMPARATIVE BALANCE SHEETS
June 30, 2020 and 2019

	2020	2019
ASSETS		
Pooled cash and investments	$ 3,126	$ 3,013
Interest receivable	14	6
Total assets	$ 3,140	$ 3,019
LIABILITIES		
Accounts payable	$ -	$ -
FUND BALANCE		
Restricted	3,140	3,019
Total liabilities and fund balance	$ 3,140	$ 3,019

LINCOLN COUNTY, NEVADA
NONMAJOR AIRPORT CAPITAL PROJECTS FUND
SCHEDULE OF REVENUES, EXPENDITURES, AND CHANGES IN FUND BALANCE - BUDGET (GAAP BASIS) AND ACTUAL
Year Ended June 30, 2020
(With Comparative Actual Amounts for Year Ended June 30, 2019)

	2020 Budget	2020 Actual	Variance - Positive (Negative)	2019 Actual
Revenues				
Miscellaneous:				
Investment income	$ -	$ 121	$ 121	$ 51
Expenditures:				
Curent:				
Capital projects:				
Capital outlay	2,900	-	2,900	-
Excess (deficiency) of revenues over expenditures	(2,900)	121	3,021	51
Fund balance:				
Beginning of year	2,968	3,019	51	2,968
End of year	$ 68	$ 3,140	$ 3,072	$ 3,019

LINCOLN COUNTY, NEVADA
NONMAJOR LINCOLN COUNTY LAND ACT CAPITAL PROJECTS FUND
COMPARATIVE BALANCE SHEETS
June 30, 2020 and 2019

	2020	2019
ASSETS		
Pooled cash and investments	$ 31,190	$ 30,348
Interest receivable	50	67
Total assets	$ 31,240	$ 30,415
LIABILITIES		
Accounts payable	$ -	$ -
FUND BALANCE		
Restricted	31,240	30,415
Total liabilities and fund balance	$ 31,240	$ 30,415

LINCOLN COUNTY, NEVADA
NONMAJOR LINCOLN COUNTY LAND ACT CAPITAL PROJECTS FUND
SCHEDULE OF REVENUES, EXPENDITURES, AND CHANGES
IN FUND BALANCE - BUDGET (GAAP BASIS) AND ACTUAL
Year Ended June 30, 2020
(With Comparative Actual Amounts for Year Ended June 30, 2019)

	2020			2019
	Budget	Actual	Variance - Positive (Negative)	Actual
Revenues:				
Miscellaneous:				
Investment income	$ -	$ 825	$ 825	$ 589
Expenditures:				
Current:				
Capital projects:				
Capital outlay	29,826	-	29,826	-
Excess (deficiency) of revenues over expenditures	(29,826)	825	30,651	589
Fund balance:				
Beginning of year	29,826	30,415	589	29,826
End of year	$ -	$ 31,240	$ 31,240	$ 30,415

LINCOLN COUNTY, NEVADA
NONMAJOR LINCOLN COUNTY WATER CAPITAL PROJECTS FUND
COMPARATIVE BALANCE SHEETS
June 30, 2020 and 2019

	2020	2019
ASSETS		
Pooled cash and investments	$ 82,414	$ 80,189
Interest receivable	133	176
Total assets	$ 82,547	$ 80,365
LIABILITIES		
Accounts payable	$ -	$ -
FUND BALANCE		
Restricted	82,547	80,365
Total liabilities and fund balance	$ 82,547	$ 80,365

LINCOLN COUNTY, NEVADA
NONMAJOR LINCOLN COUNTY WATER CAPITAL PROJECTS FUND
SCHEDULE OF REVENUES, EXPENDITURES, AND CHANGES
IN FUND BALANCE - BUDGET (GAAP BASIS) AND ACTUAL
Year Ended June 30, 2020
(With Comparative Actual Amounts for Year Ended June 30, 2019)

	2020			
	Budget	Actual	Variance - Positive (Negative)	2019 Actual
Revenues:				
Miscellaneous:				
Investment income	$ -	$ 2,182	$ 2,182	$ 1,555
Expenditures:				
Current:				
Capital projects:				
Capital outlay	78,810	-	78,810	-
Excess (deficiency) of revenues over expenditures	(78,810)	2,182	80,992	1,555
Fund balance:				
Beginning of year	78,810	80,365	1,555	78,810
End of year	$ -	$ 82,547	$ 82,547	$ 80,365

LINCOLN COUNTY, NEVADA
NONMAJOR LINCOLN COUNTY WATER DISTRICT CAPITAL PROJECTS FUND
COMPARATIVE BALANCE SHEETS
June 30, 2020 and 2019

	2020	2019
ASSETS		
Pooled cash and investments	$ 858,129	$ 710,908
Interest receivable	3,548	3,071
Special assessment receivable	79,764	-
Total assets	$ 941,441	$ 713,979
LIABILITIES		
Accounts payable	$ -	$ -
FUND BALANCE		
Restricted	941,441	713,979
Total liabilities and fund balance	$ 941,441	$ 713,979

LINCOLN COUNTY, NEVADA
NONMAJOR LINCOLN COUNTY WATER DISTRICT CAPITAL PROJECTS FUND
SCHEDULE OF REVENUES, EXPENDITURES, AND CHANGES
IN FUND BALANCE - BUDGET (GAAP BASIS) AND ACTUAL
Year Ended June 30, 2020
(With Comparative Actual Amounts for Year Ended June 30, 2019)

	2020		Variance - Positive	2019
	Budget	Actual	(Negative)	Actual
Revenues:				
Special assessment:				
Capital improvement	$ -	$ 186,003	$ 186,003	$ -
Miscellaneous:				
Investment income	7,500	41,459	33,959	25,129
Total revenues	7,500	227,462	219,962	25,129
Expenditures:				
Current:				
Capital projects:				
Capital outlay	712,742	-	712,742	8,892
Excess (deficiency) of revenues over expenditures	(705,242)	227,462	932,704	16,237
Fund balance:				
Beginning of year	705,242	713,979	8,737	697,742
End of year	$ -	$ 941,441	$ 941,441	$ 713,979

NONMAJOR ENTERPRISE FUNDS

The Enterprise Fund are used to account for operations that are financed and operated in a manner similar to private business enterprises–where the intent of the County's management is that the costs of providing goods or services be financed or recovered primarily through user charges.

The Pioche Public Utility Funds are used to account for revenues and expenses of the water, sewer, and electric utility services provided for the residents of Pioche, Nevada.

The Building Department Fund is used to account for revenues and expenses of building inspection services provided for the residents of Pioche, Nevada.

LINCOLN COUNTY, NEVADA
NONMAJOR ENTERPRISE FUNDS
COMBINING STATEMENT OF NET POSITION
June 30, 2020
With Comparative Total for June 30, 2019

	Pioche Public Water Utility	Pioche Public Sewer Utility	Pioche Public Electric Utility	Building Department	Totals 2020	Totals 2019
ASSETS						
Current assets:						
Pooled cash and investments	$ 234,895	$ 277,693	$ 206,441	$ 21,014	$ 740,043	$ 793,828
Accounts receivable	21,026	12,869	-	-	33,895	85,495
Interest receivable	188	242	392	29	851	758
Total current assets	256,109	290,804	206,833	21,043	774,789	880,081
Restricted assets:						
Cash	-	11,490	-	-	11,490	32,238
Capital assets:						
Land	4,000	10,000	-	-	14,000	14,000
Property, plant and equipment (net of depreciation)	461,597	529,272	-	-	990,869	1,214,858
Total capital assets	465,597	539,272	-	-	1,004,869	1,228,858
Total assets	721,706	841,566	206,833	21,043	1,791,148	2,141,177
DEFERRED OUTFLOWS OF RESOURCES						
Deferred pension charge	11,567	5,600	-	19,101	36,268	59,106
Deferred opeb	2,864	2,864	-	-	5,728	5,286
Total deferred outflows of resources	14,431	8,464	-	19,101	41,996	64,392
LIABILITIES						
Current liabilities:						
Accounts payable	14,609	1,268	-	261	16,138	39,657
Accrued payroll and benefits	5,226	3,188	1,127	5,849	15,390	19,805
Customer deposits	90	-	-	-	90	8,120
Accrued compensated absences	6,801	4,533	-	5,175	16,509	21,860
Accrued interest payable	-	1,288	-	-	1,288	1,312
Total current liabilities	26,726	10,277	1,127	11,285	49,415	90,754
Current liabilities payable from restricted assets:						
Revenue bond	-	3,440	-	-	3,440	10,630
Non-current liabilities:						
Accrued compensated absences	6,277	4,185	-	3,450	13,912	14,449
Net pension liability	86,443	44,149	-	94,488	225,080	367,620
OPEB liability	57,453	57,453	-	-	114,906	93,697
Revenue bond	-	174,049	-	-	174,049	177,489
Total non-current liabilities	150,173	279,836	-	97,938	527,947	653,255
Total liabilities	176,899	293,553	1,127	109,223	580,802	754,639
DEFERRED INFLOWS OF RESOURCES						
Deferred pension charge	10,266	5,488	-	20,318	36,072	40,170
NET POSITION						
Invested in capital assets, net of related debt	465,597	361,783	-	-	827,380	1,040,739
Restricted for revenue bond debt service	-	11,490	-	-	11,490	32,238
Unrestricted	83,375	177,716	205,706	(89,397)	377,400	337,783
Total net position	$ 548,972	$ 550,989	$ 205,706	$ (89,397)	$ 1,216,270	$ 1,410,760

LINCOLN COUNTY, NEVADA
NONMAJOR ENTERPRISE FUNDS
COMBINING SCHEDULE OF REVENUES, EXPENSES, AND CHANGES IN NET POSITION
Year Ended June 30, 2020
With Comparative Total for June 30, 2019

	Pioche Public Water Utility	Pioche Public Sewer Utility	Pioche Public Electric Utility	Building Department	Totals 2020	Totals 2019
Operating revenues:						
Charges for services	$ 191,261	$ 106,758	$ 260,233	$ 22,144	$ 580,396	$ 1,091,024
Operating expenses:						
Salaries and wages	57,916	26,810	44,961	36,431	166,118	184,612
Employee benefits	40,331	24,526	22,669	31,863	119,389	100,443
Services and supplies	79,332	23,498	239,473	3,682	345,985	722,834
Depreciation	22,937	18,557	-	476	41,970	79,227
Total operating expenses	200,516	93,391	307,103	72,452	673,462	1,087,116
Operating income (loss)	(9,255)	13,367	(46,870)	(50,308)	(93,066)	3,908
Non-operating revenues (expenses):						
Investment income	3,082	3,955	6,404	482	13,923	6,686
Operating transfers in	-	-		50,000	50,000	40,000
Capital fees	21,607	15,974	19,031	-	56,612	135,632
Custom fees	9,209	114	1,752	-	11,075	25,409
Interest expense	(1,309)	(7,850)	-	-	(9,159)	(8,899)
Total non-operating revenues (expenses)	32,589	12,193	27,187	50,482	122,451	198,828
Change in net position before special items	23,334	25,560	(19,683)	174	29,385	202,736
Special items:						
Sale of electric operations:						
Capital asset transfers in	2,320	320	(2,640)	-	-	-
Loss on disposal of assets	-	-	(349,430)	-	(349,430)	-
Gain on net pension liabilites	-	-	125,407	-	125,407	-
Loss on OPEB liability	(14,661)	(14,661)	29,470	-	148	-
Total special items	(12,341)	(14,341)	(197,193)	-	(223,875)	-
Change in net position	10,993	11,219	(216,876)	174	(194,490)	202,736
Net Position:						
Beginning of year	537,979	539,770	422,582	(89,571)	1,410,760	1,208,024
End of year	$ 548,972	$ 550,989	$ 205,706	$ (89,397)	$ 1,216,270	$ 1,410,760

LINCOLN COUNTY, NEVADA
NONMAJOR ENTERPRISE FUNDS
COMBINING STATEMENT OF CASH FLOWS
Year Ended June 30, 2020
With Comparative Total for June 30, 2019

	Pioche Public Water Utility	Pioche Public Sewer Utility	Pioche Public Electric Utility	Building Department	Totals 2020	Totals 2019
Cash flows from operating activities:						
Cash received from customers	$ 189,923	$ 104,581	$ 307,318	$ 22,144	$ 623,966	$ 1,090,006
Cash paid for services and supplies	(70,366)	(23,131)	(272,450)	(3,557)	(369,504)	(749,618)
Cash paid for salaries and benefits	(83,456)	(35,712)	(238,859)	(70,897)	(428,924)	(281,838)
Net cash provided (used) by operating activities	36,101	45,738	(203,991)	(52,310)	(174,462)	58,550
Cash flows from noncapital financing activities:						
Operating transfers in/out	-	-	-	50,000	50,000	40,000
Cash flows from capital and related financing activities:						
Purchases of capital assets	(11,775)	-	-	-	(11,775)	(71,282)
Capital fees	21,607	15,974	19,031	-	56,612	135,632
Custom fees	9,209	114	1,752	-	11,075	25,409
Debt retirement	(7,336)	(3,294)	-	-	(10,630)	(22,993)
Interest paid	(1,309)	(7,874)	-	-	(9,183)	(8,923)
Net cash provided (used) by capital and related financing activities	10,396	4,920	20,783	-	36,099	57,843
Cash flows from investing activities:						
Investment income	3,079	3,972	6,280	499	13,830	6,389
Net change in cash and cash equivalents	49,576	54,630	(176,928)	(1,811)	(74,533)	162,782
Cash:						
Beginning of year	185,319	234,553	383,369	22,825	826,066	663,284
End of year	$ 234,895	$ 289,183	$ 206,441	$ 21,014	$ 751,533	$ 826,066
Reconciliation of operating income (loss) to net cash provided (used) by operating activities:						
Operating income (loss)	$ (9,255)	$ 13,367	$ (46,870)	$ (50,308)	$ (93,066)	$ 3,908
Adjustments to reconcile operating income (loss) to net cash provided (used) by operating activities:						
Depreciation expense	22,937	18,557	-	476	41,970	79,227
(Increase) decrease in accounts receivable	(1,338)	(2,177)	55,115	-	51,600	(768)
Increase (decrease) in accounts payable	8,966	367	(32,977)	125	(23,519)	(26,784)
Increase (decrease) in accrued payroll and benefits	169	450	(3,963)	(1,071)	(4,415)	363
Increase (decrease) in compensated absences	4,952	4,555	(11,630)	(3,765)	(5,888)	2,971
Increase (decrease) in net pension liability	(2,933)	(1,540)	(132,110)	(5,957)	(142,540)	1,259
Increase (decrease) in net pension expense	2,145	1,702	6,703	8,190	18,740	(2,284)
Increase (decrease) in OPEB liability	26,221	26,220	(31,232)	-	21,209	908
Increase (decrease) in OPEB expense	(1,102)	(1,102)	1,762	-	(442)	-
Increase (decrease) in customer deposits	-	-	(8,030)	-	(8,030)	(250)
Loss on special items	(14,661)	(14,661)	(759)	-	(30,081)	-
Total adjustments	45,356	32,371	(157,121)	(2,002)	(81,396)	54,642
Net cash provided (used) by operating activities	$ 36,101	$ 45,738	$ (203,991)	$ (52,310)	$ (174,462)	$ 58,550

LINCOLN COUNTY, NEVADA
NONMAJOR PIOCHE PUBLIC UTILITY WATER ENTERPRISE FUND
COMPARATIVE STATEMENT OF NET POSITION
June 30, 2020 and 2019

	2020	2019
ASSETS		
Current assets:		
Pooled cash and investments	$ 234,895	$ 164,571
Accounts receivable	21,026	19,688
Interest receivable	188	185
Total current assets	256,109	184,444
Restricted assets:		
Cash	-	20,748
Capital assets:		
Land	4,000	2,000
Property, plant and equipment (net of depreciation)	461,597	472,439
Total capital assets	465,597	474,439
Total assets	721,706	679,631
DEFERRED OUTFLOWS OF RESOURCES		
Deferred pension charge	11,567	11,678
Deferred opeb	2,864	1,762
Total deferred outflows of resources	14,431	13,440
LIABILITIES		
Current liabilities:		
Accounts payable	14,609	5,643
Accrued payroll and benefits	5,226	5,057
Customer deposits	90	90
Accrued compensated absences	6,801	4,750
Total current liabilities	26,726	15,540
Current liabilities payable from restricted assets:		
Revenue bond	-	7,336
Non-current liabilities:		
Accrued compensated absences	6,277	3,376
Net pension liability	86,443	89,376
OPEB liability	57,453	31,232
Total non-current liabilities	150,173	123,984
Total liabilities	176,899	146,860
DEFERRED INFLOWS OF RESOURCES		
Deferred pension charge	10,266	8,232
NET POSITION		
Invested in capital assets, net of related debt	465,597	467,103
Restricted for revenue bond debt service	-	20,748
Unrestricted	83,375	50,128
Total net position	$ 548,972	$ 537,979

LINCOLN COUNTY, NEVADA
NONMAJOR PIOCHE PUBLIC UTILITY WATER ENTERPRISE FUND
SCHEDULE OF REVENUES, EXPENSES, AND CHANGES IN NET POSITION - BUDGET (GAAP BASIS) AND ACTUAL
Year Ended June 30, 2020
(With Comparative Actual Amounts for Year Ended June 30, 2019)

	2020		Variance-Positive	2019
	Budget	Actual	(Negative)	Actual
Operating revenues:				
Water	$ 199,500	$ 191,261	$ (8,239)	$ 177,340
Operating expenses:				
Water:				
Salaries and wages	62,280	57,916	4,364	42,886
Employee benefits	35,212	40,331	(5,119)	22,698
Services and supplies	86,295	79,332	6,963	69,564
Depreciation	32,000	22,937	9,063	29,152
Total operating expenses	215,787	200,516	15,271	164,300
Operating income (loss)	(16,287)	(9,255)	7,032	13,040
Non-operating revenues (expenses):				
Investment income	-	3,082	3,082	1,629
Water capital fees	34,000	21,607	(12,393)	45,782
Water custom fees	5,000	9,209	4,209	9,605
Interest expense	(200)	(1,309)	(1,109)	(909)
Total non-operating revenues (expenses)	38,800	32,589	(6,211)	56,107
Income (loss) before special and extraordinary items	22,513	23,334	821	69,147
Special and extraordinary items:				
Sale of electric operations:				
Capital asset transfers in	-	2,320	2,320	-
Loss on OPEB liability	-	(14,661)	(14,661)	-
Total extraordinary items	-	(12,341)	(12,341)	-
Change in net position	$ 22,513	10,993	$ (11,520)	69,147
Net Position:				
Beginning balance		537,979		468,832
End of year		$ 548,972		$ 537,979

LINCOLN COUNTY, NEVADA
NONMAJOR PIOCHE PUBLIC UTILITY WATER ENTERPRISE FUND
COMPARATIVE STATEMENT OF CASH FLOWS
June 30, 2020 and 2019

	2020	2019
Cash flows from operating activities:		
Cash received from customers	$ 189,923	$ 180,197
Cash paid for services and supplies	(70,366)	(84,691)
Cash paid for salaries and benefits	(83,456)	(64,911)
Net cash provided (used) by operating activities	36,101	30,595
Cash flows from capital and related financing activities:		
Purchases of capital assets	(11,775)	(24,912)
Capital fees	21,607	45,782
Custom fees	9,209	9,605
Debt retirement	(7,336)	(19,839)
Interest paid	(1,309)	(909)
Net cash provided (used) by capital and related financing activities	10,396	9,727
Cash flows from investing activities:		
Investment income	3,079	1,572
Net change in cash and cash equivalents	49,576	41,894
Cash:		
Beginning of year	185,319	143,425
End of year	$ 234,895	$ 185,319
Reconciliation of operating income (loss) to net cash provided (used) by operating activities:		
Operating income (loss)	$ (9,255)	$ 13,040
Adjustments to reconcile operating income (loss) to net cash provided (used) by operating activities:		
Depreciation expense	22,937	29,152
(Increase) decrease in accounts receivable	(1,338)	4,527
Increase (decrease) in accounts payable	8,966	(15,127)
Increase (decrease) in accrued payroll and benefits	169	(42)
Increase (decrease) in compensated absences	4,952	189
Increase (decrease) in net pension liability	(2,933)	377
Increase (decrease) in net pension expense	2,145	(153)
Increase (decrease) in OPEB liability	26,221	302
Increase (decrease) in OPEB expense	(1,102)	-
Increase (decrease) in customer deposits	-	(1,670)
Loss on special items	(14,661)	-
Total adjustments	45,356	17,555
Net cash provided (used) by operating activities	$ 36,101	$ 30,595

LINCOLN COUNTY, NEVADA
NONMAJOR PIOCHE PUBLIC UTILITY SEWER ENTERPRISE FUND
COMPARATIVE STATEMENT OF NET POSITION
June 30, 2020 and 2019

	2020	2019
ASSETS		
Current assets:		
Pooled cash and investments	$ 277,693	$ 223,063
Accounts receivable	12,869	10,692
Interest receivable	242	259
Total current assets	290,804	234,014
Restricted assets:		
Cash	11,490	11,490
Capital assets:		
Land	10,000	10,000
Property, plant and equipment (net of depreciation)	529,272	547,509
Total capital assets	539,272	557,509
Total assets	841,566	803,013
DEFERRED OUTFLOWS OF RESOURCES		
Deferred pension charge	5,600	6,874
Deferred opeb	2,864	1,762
Total deferred outflows of resources	8,464	8,636
LIABILITIES		
Current liabilities:		
Accounts payable	1,268	901
Accrued payroll and benefits	3,188	2,738
Accrued compensated absences	4,533	2,250
Accrued interest payable	1,288	1,312
Total current liabilities	10,277	7,201
Current liabilities payable from restricted assets:		
Revenue bond	3,440	3,294
Non-current liabilities:		
Accrued compensated absences	4,185	1,913
Net pension liability	44,149	45,689
OPEB liability	57,453	31,233
Revenue bond	174,049	177,489
Total non-current liabilities	279,836	256,324
Total liabilities	293,553	266,819
DEFERRED INFLOWS OF RESOURCES		
Deferred pension charge	5,488	5,060
NET POSITION		
Invested in capital assets, net of related debt	361,783	376,726
Restricted for revenue bond debt service	11,490	11,490
Unrestricted	177,716	151,554
Total net position	$ 550,989	$ 539,770

LINCOLN COUNTY, NEVADA
NONMAJOR PIOCHE PUBLIC UTILITY SEWER ENTERPRISE FUND
SCHEDULE OF REVENUES, EXPENSES, AND CHANGES IN NET POSITION - BUDGET (GAAP BASIS) AND ACTUAL
Year Ended June 30, 2020
(With Comparative Actual Amounts for Year Ended June 30, 2019)

	2020 Budget	2020 Actual	Variance-Positive (Negative)	2019 Actual
Operating revenues:				
Sewer	$ 90,500	$ 106,758	$ 16,258	$ 94,857
Operating expenses:				
Sewer				
Salaries and wages	37,430	26,810	10,620	24,680
Employee benefits	22,256	24,526	(2,270)	13,297
Services and supplies	29,194	23,498	5,696	29,308
Depreciation	27,000	18,557	8,443	23,379
Total operating expenses	115,880	93,391	22,489	90,664
Operating income (loss)	(25,380)	13,367	38,747	4,193
Non-operating revenues (expenses):				
Investment income	-	3,955	3,955	2,285
Sewer capital fees	25,000	15,974	(9,026)	23,489
Sewer custom fees	-	114	114	1,266
Interest expense	(7,874)	(7,850)	24	(7,990)
Total non-operating revenues (expenses)	17,126	12,193	(4,933)	19,050
Income (loss) before special and extraordinary items	(8,254)	25,560	33,814	23,243
Special and extraordinary items:				
Sale of electric operations:				
Capital asset transfers in	-	320	320	-
Loss on OPEB liability	-	(14,661)	(14,661)	-
Total extraordinary items	-	(14,341)	(14,341)	-
Change in net position	$ (8,254)	11,219	$ 19,473	23,243
Net Position:				
Beginning balance		539,770		516,527
End of year		$ 550,989		$ 539,770

LINCOLN COUNTY, NEVADA
NONMAJOR PIOCHE PUBLIC UTILITY SEWER ENTERPRISE FUND
COMPARATIVE STATEMENT OF CASH FLOWS
June 30, 2020 and 2019

	2020	2019
Cash flows from operating activities:		
Cash received from customers	$ 104,581	$ 94,933
Cash paid for services and supplies	(23,131)	(29,771)
Cash paid for salaries and benefits	(35,712)	(37,178)
Net cash provided (used) by operating activities	45,738	27,984
Cash flows from capital and related financing activities:		
Capital fees	15,974	23,489
Custom fees	114	1,266
Debt retirement	(3,294)	(3,154)
Interest paid	(7,874)	(8,014)
Net cash provided (used) by capital and related financing activities	4,920	13,587
Cash flows from investing activities:		
Investment income	3,972	2,165
Net change in cash and cash equivalents	54,630	43,736
Cash:		
Beginning of year	234,553	190,817
End of year	$ 289,183	$ 234,553
Reconciliation of operating income (loss) to net cash provided (used) by operating activities:		
Operating income (loss)	$ 13,367	$ 4,193
Adjustments to reconcile operating income (loss) to net cash provided (used) by operating activities:		
Depreciation expense	18,557	23,379
(Increase) decrease in accounts receivable	(2,177)	76
Increase (decrease) in accounts payable	367	(463)
Increase (decrease) in accrued payroll and benefits	450	(44)
Increase (decrease) in compensated absences	4,555	96
Increase (decrease) in net pension liability	(1,540)	124
Increase (decrease) in net pension expense	1,702	319
Increase (decrease) in OPEB liability	26,220	304
Increase (decrease) in OPEB expense	(1,102)	-
Loss on special items	(14,661)	-
Total adjustments	32,371	23,791
Net cash provided (used) by operating activities	$ 45,738	$ 27,984

LINCOLN COUNTY, NEVADA
NONMAJOR PIOCHE PUBLIC UTILITY ELECTRIC ENTERPRISE FUND
COMPARATIVE STATEMENT OF NET POSITION
June 30, 2020 and 2019

	2020	2019
ASSETS		
Current assets:		
Pooled cash and investments	$ 206,441	$ 383,369
Accounts receivable	-	55,115
Interest receivable	392	268
Total current assets	206,833	438,752
Capital assets:		
Land	-	2,000
Property, plant and equipment (net of depreciation)	-	194,434
Total capital assets	-	196,434
Total assets	206,833	635,186
DEFERRED OUTFLOWS OF RESOURCES		
Deferred pension charge	-	20,745
Deferred OPEB	-	1,762
Total deferred outflows of resources	-	22,507
LIABILITIES		
Current liabilities:		
Accounts payable	-	32,977
Accrued payroll and benefits	1,127	5,090
Customer deposits	-	8,030
Accrued compensated absences	-	7,180
Total current liabilities	1,127	53,277
Non-current liabilities:		
Accrued compensated absences	-	4,450
Net pension liability	-	132,110
OPEB liability	-	31,232
Total non-current liabilities	-	167,792
Total liabilities	1,127	221,069
DEFERRED INFLOWS OF RESOURCES		
Deferred pension charge	-	14,042
NET POSITION		
Invested in capital assets, net of related debt	-	196,434
Unrestricted	205,706	226,148
Total net position	$ 205,706	$ 422,582

LINCOLN COUNTY, NEVADA
NONMAJOR PIOCHE PUBLIC UTILITY ELECTRIC ENTERPRISE FUND
SCHEDULE OF REVENUES, EXPENSES, AND CHANGES IN NET POSITION - BUDGET (GAAP BASIS) AND ACTUAL
Year Ended June 30, 2020
(With Comparative Actual Amounts for Year Ended June 30, 2019)

	2020 Budget	2020 Actual	Variance-Positive (Negative)	2019 Actual
Operating revenues:				
Electricity	$ 701,500	$ 260,233	$ (441,267)	$ 794,658
Operating expenses:				
Electricity:				
Salaries and wages	84,347	44,961	39,386	73,023
Employee benefits	43,948	22,669	21,279	35,605
Services and supplies	581,681	239,473	342,208	620,444
Depreciation	40,000	-	40,000	26,221
Total operating expenses	749,976	307,103	442,873	755,293
Operating income (loss)	(48,476)	(46,870)	1,606	39,365
Non-operating revenues (expenses):				
Investment income	-	6,404	6,404	2,360
Electricity capital fees	60,000	19,031	(40,969)	66,361
Electricity custom fees	5,000	1,752	(3,248)	14,538
Total non-operating revenues (expenses)	65,000	27,187	(37,813)	83,259
Change in net position before special items	16,524	(19,683)	(36,207)	122,624
Special items:				
Sale of electric operations:				
Capital asset transfer out	-	(2,640)	(2,640)	-
Loss on disposal of assets	-	(349,430)	(349,430)	-
Gain on net pension liabilites	-	125,407	125,407	-
Gain on OPEB liabilities	-	29,470	29,470	-
Total special items	-	(197,193)	(197,193)	-
Change in net position	$ 16,524	(216,876)	$ (233,400)	122,624
Net Position:				
Beginning of year		422,582		299,958
End of year		$ 205,706		$ 422,582

LINCOLN COUNTY, NEVADA
NONMAJOR PIOCHE PUBLIC UTILITY ELECTRIC ENTERPRISE FUND
COMPARATIVE STATEMENT OF CASH FLOWS
June 30, 2020 and 2019

	2020	2019
Cash flows from operating activities:		
Cash received from customers	$ 307,318	$ 790,707
Cash paid for services and supplies	(272,450)	(631,175)
Cash paid for salaries and benefits	(238,859)	(108,899)
Net cash provided (used) by operating activities	(203,991)	50,633
Cash flows from capital and related financing activities:		
Purchases of capital assets	-	(46,370)
Capital fees	19,031	66,361
Custom fees	1,752	14,538
Net cash provided (used) by capital and related financing activities	20,783	34,529
Cash flows from investing activities:		
Investment income	6,280	2,257
Net change in cash and cash equivalents	(176,928)	87,419
Cash:		
Beginning of year	383,369	295,950
End of year	$ 206,441	$ 383,369
Reconciliation of operating income (loss) to net cash provided (used) by operating activities:		
Operating income (loss)	$ (46,870)	$ 39,365
Adjustments to reconcile operating income (loss) to net cash provided (used) by operating activities:		
Depreciation expense	-	26,221
(Increase) decrease in accounts receivable	55,115	(5,371)
Increase (decrease) in accounts payable	(32,977)	(10,731)
Increase (decrease) in accrued payroll and benefits	(3,963)	(400)
Increase (decrease) in compensated absences	(11,630)	269
Increase (decrease) in net pension liability	(132,110)	499
Increase (decrease) in net pension expense	6,703	(941)
Increase (decrease) in OPEB liability	(31,232)	302
Increase (decrease) in OPEB pension expense	1,762	-
Increase (decrease) in customer deposits	(8,030)	1,420
Loss on special items	(759)	-
Total adjustments	(156,362)	11,268
Net cash provided (used) by operating activities	$ (203,232)	$ 50,633

LINCOLN COUNTY, NEVADA
NONMAJOR BUILDING DEPARTMENT ENTERPRISE FUND
COMPARATIVE STATEMENT OF NET POSITION
June 30, 2020 and 2019

	2020	2019
ASSETS		
Current assets:		
Pooled cash and investments	$ 21,014	$ 22,825
Interest receivable	29	46
Capital assets:		
Property and equipment (net of depreciation)	-	476
Total assets	21,043	23,347
DEFERRED OUTFLOWS OF RESOURCES		
Deferred pension charge	19,101	19,809
LIABILITIES		
Current liabilities:		
Accounts payable	261	136
Accrued payroll and benefits	5,849	6,920
Accrued compensated absences	5,175	7,680
Total current liabilities	11,285	14,736
Non-current liabilities:		
Accrued compensated absences	3,450	4,710
Net pension liability	94,488	100,445
Total non-current liabilities	97,938	105,155
Total liabilities	109,223	119,891
DEFERRED INFLOWS OF RESOURCES		
Deferred pension charge	20,318	12,836
NET POSITION		
Invested in capital assets, net of related debt	-	476
Unrestricted	(89,397)	(90,047)
Total net position	$ (89,397)	$ (89,571)

LINCOLN COUNTY, NEVADA
NONMAJOR BUILDING DEPARTMENT ENTERPRISE FUND
SCHEDULE OF REVENUES, EXPENSES, AND CHANGES IN NET POSITION - BUDGET (GAAP BASIS) AND ACTUAL
Year Ended June 30, 2020
(With Comparative Actual Amounts for Year Ended June 30, 2019)

	2020 Budget	2020 Actual	Variance-Positive (Negative)	2019 Actual
Operating revenues:				
Charges for services	$ 20,000	$ 22,144	$ 2,144	$ 24,169
Operating expenses:				
Public works:				
Salaries and wages	53,909	36,431	17,478	44,023
Employee benefits	17,160	31,863	(14,703)	28,843
Service and supplies	11,160	3,682	7,478	3,518
Depreciation	1,000	476	524	475
Total operating expenses	83,229	72,452	10,777	76,859
Operating income (loss)	(63,229)	(50,308)	12,921	(52,690)
Non-operating revenues (expenses):				
Investment income	-	482	482	412
Operating transfers in	50,000	50,000	-	40,000
Total non-operating revenues (expenses)	50,000	50,482	482	40,412
Change in net position	$ (13,229)	174	13,403	(12,278)
Net Position:				
Beginning balance		(89,571)		(77,293)
End of year		$ (89,397)		$ (89,571)

LINCOLN COUNTY, NEVADA
NONMAJOR BUILDING DEPARTMENT ENTERPRISE FUND
COMPARATIVE STATEMENT OF CASH FLOWS
Years Ended June 30, 2020 and 2019

	2020	2019
Cash flows from operating activities:		
Cash received from customers	$ 22,144	$ 24,169
Cash paid for services and supplies	(3,557)	(3,981)
Cash paid for salaries and benefits	(70,897)	(70,850)
Net cash provided (used) by operating activities	(52,310)	(50,662)
Cash flows from noncapital financing activities:		
Operating transfers in	50,000	40,000
Cash flows from investing activities:		
Investment income	499	395
Net change in cash and cash equivalents	(1,811)	(10,267)
Cash:		
Beginning of year	22,825	33,092
End of year	$ 21,014	$ 22,825
Reconciliation of operating income to net cash provided (used) by operating activities:		
Operating income (loss)	$ (50,308)	$ (52,690)
Adjustments to reconcile operating income to net cash provided (used) by operating activities:		
Depreciation expense	476	475
Increase (decrease) in accounts payable	125	(463)
Increase (decrease) in accrued payroll and benefits	(1,071)	849
Increase (decrease) in compensated absences	(3,765)	2,417
Increase (decrease) in net pension liability	(5,957)	259
Increase (decrease) in net pension expense	8,190	(1,509)
Total adjustments	(2,002)	2,028
Net cash provided (used) by operating activities	$ (52,310)	$ (50,662)

AGENCY FUNDS

Agency funds are used to account for assets held by the government as an agent for individual, private organizations, other governments, and/or other funds.

The Tax Fund is used to account for revenues received from County Treasurer sales of property to satisfy delinquent property taxes. Revenues collected in excess of delinquent taxes and penalties are held for two years. If no claim is made for the monies, the monies may be transferred to the General Fund.

The following funds are used to account for property taxes and other revenues collected by the County on behalf of other government entities. The revenues collected are remitted to the government entities on a periodic basis. State, Caliente City, Caliente City Capital Projects, School General, School Debt Service, Pahranagat Valley Fire District, Pioche Fire District, Pioche Fire District Capital Projects, Television District, Panaca Fire Protection District, Coyote Springs GID, Hospital, Lincoln County Fire Protection District, Pioche Fire District Emergency, Southeastern Lincoln County Habitat Conservation Plan GID, and Lincoln County Fire Protection District Emergency Funds.

The Public Land Trust, Range, and the Fish and Game Funds are used to account for revenues received and expenditures made on behalf of others.

LINCOLN COUNTY, NEVADA
AGENCY FUNDS
COMBINING STATEMENT OF NET POSITION
June 30, 2020
(With Comparative Totals for June 30, 2019)

	Tax Trust	State	Caliente City	Caliente City Capital Projects	Fish and Game	Range	School General	School Debt Service	Lincoln County TV District	Pahranagat Fire District	Public Land	Hospital
ASSETS												
Pooled cash and investments	$ -	$ 43,783	$ 2,114	$ 8,412	$ 3,433	$ 28,083	$ 6,674	$ 161,012	$ 479	$ 4,265	$ 208	$ 2,383
Interest receivable	-	-	23	-	-	110	-	1,025	-	20	-	-
Taxes receivable	-	6,066	2,469	-	-	-	23,348	6,946	-	1,761	-	8,337
Due from other governments	-	-	12	-	-	-	10	3	-	10,377	-	3
Total assets	$ -	$ 49,849	$ 4,618	$ 8,412	$ 3,433	$ 28,193	$ 30,032	$ 168,986	$ 479	$ 16,423	$ 208	$ 10,723
LIABILITIES												
Amount held for others	$ -	$ 44,548	$ 2,490	$ 8,412	$ 3,433	$ 28,193	$ 9,622	$ 162,915	$ 479	$ 14,698	$ 208	$ 3,436
Unavailable revenue - taxes	-	5,301	2,128	-	-	-	20,410	6,071	-	1,725	-	7,287
Total liabilities	$ -	$ 49,849	$ 4,618	$ 8,412	$ 3,433	$ 28,193	$ 30,032	$ 168,986	$ 479	$ 16,423	$ 208	$ 10,723

LINCOLN COUNTY, NEVADA
AGENCY FUNDS
COMBINING STATEMENT OF NET POSITION
June 30, 2020
(With Comparative Totals for June 30, 2019)

	Panaca Fire Protection District	Pioche Fire District	Pioche Fire District Capital Projects	Pioche Fire Emergency	Coyote Springs GID	SB 371	SLCHCP GID	Lincoln County Fire Protection District	Lincoln County Fire Protection District Emergency	Totals 2020	Totals 2019
ASSETS											
Pooled cash and investments	$ 30,343	$ 68,844	$ 1,553	$ 6,350	$ -	$ 50	$ 172,606	$ 315,598	$ 74,456	$ 930,646	$ 1,243,099
Interest receivable	178	404	20	105	-	-	2,072	5,548	1,076	10,581	10,199
Taxes receivable	1,278	771	-	-	-	-	2	2,167	-	53,145	58,988
Due from other governments	-	5,876	-	-	-	-	-	43,675	-	59,956	48,483
Total assets	$ 31,799	$ 75,895	$ 1,573	$ 6,455	$ -	$ 50	$ 174,680	$ 366,988	$ 75,532	$ 1,054,328	$ 1,360,769
LIABILITIES											
Amount held for others	$ 30,558	$ 75,124	$ 1,573	$ 6,455	$ -	$ 50	$ 174,678	$ 364,828	$ 75,532	$ 1,007,232	$ 1,314,135
Unavailable revenue - taxes	1,241	771	-	-	-	-	2	2,160	-	47,096	46,634
Total liabilities	$ 31,799	$ 75,895	$ 1,573	$ 6,455	$ -	$ 50	$ 174,680	$ 366,988	$ 75,532	$ 1,054,328	$ 1,360,769

LINCOLN COUNTY, NEVADA
COMBINING STATEMENT OF CHANGES IN ASSETS
AND LIABILITIES - ALL AGENCY FUNDS
Year Ended June 30, 2020

	Balance July 1, 2019	Additions	Deductions	Balance June 30, 2020
Tax Trust				
Assets:				
Pooled cash and investments	$ 24,162	$ 535	$ 24,697	$ -
Interest receivable	51	-	51	-
Total assets	$ 24,213	$ 535	$ 24,748	$ -
Liabilities:				
Amount held for others	$ 24,213	$ 535	$ 24,748	$ -
State				
Assets:				
Pooled cash and investments	$ 71,613	$ 672,299	$ 700,129	$ 43,783
Taxes receivable	6,677	6,066	6,677	6,066
Total assets	$ 78,290	$ 678,365	$ 706,806	$ 49,849
Liabilities:				
Amount held for others	$ 72,987	$ 673,064	$ 701,503	$ 44,548
Unavailable revenue - taxes	5,303	5,301	5,303	5,301
Total liabilities	$ 78,290	$ 678,365	$ 706,806	$ 49,849
Caliente City				
Assets:				
Pooled cash and investments	$ 9,897	$ 148,970	$ 156,753	$ 2,114
Interest receivable	27	23	27	23
Taxes receivable	3,157	2,469	3,157	2,469
Due from other governments	-	12	-	12
Total assets	$ 13,081	$ 151,474	$ 159,937	$ 4,618
Liabilities:				
Amount held for others	$ 10,708	$ 149,346	$ 157,564	$ 2,490
Unavailable revenue - taxes	2,373	2,128	2,373	2,128
Total liabilities	$ 13,081	$ 151,474	$ 159,937	$ 4,618
Caliente City Capital Projects				
Assets:				
Pooled cash and investments	$ 243	$ 8,169	$ -	$ 8,412
Liabilities:				
Amount held for others	$ 243	$ 8,169	$ -	$ 8,412
Fish and Game				
Assets:				
Pooled cash and investments	$ 879	$ 4,589	$ 2,035	$ 3,433
Liabilities:				
Amount held for others	$ 879	$ 4,589	$ 2,035	$ 3,433

LINCOLN COUNTY, NEVADA
COMBINING STATEMENT OF CHANGES IN ASSETS
AND LIABILITIES - ALL AGENCY FUNDS (CONTINUED)
Year Ended June 30, 2020

	Balance July 1, 2019	Additions	Deductions	Balance June 30, 2020
Range				
Assets:				
Pooled cash and investments	$ 13,799	$ 61,106	$ 46,822	$ 28,083
Interest receivable	100	110	100	110
Due from other governments	28,635	-	28,635	-
Total assets	$ 42,534	$ 61,216	$ 75,557	$ 28,193
Liabilities:				
Amount held for others	$ 42,534	$ 61,216	$ 75,557	$ 28,193
School General				
Assets:				
Pooled cash and investments	$ 209,072	$ 1,765,303	$ 1,967,701	$ 6,674
Taxes receivable	25,724	23,348	25,724	23,348
Due from other governments	1	10	1	10
Total assets	$ 234,797	$ 1,788,661	$ 1,993,426	$ 30,032
Liabilities:				
Amount held for others	$ 214,390	$ 1,768,251	$ 1,973,019	$ 9,622
Unavailable revenue - taxes	20,407	20,410	20,407	20,410
Total liabilities	$ 234,797	$ 1,788,661	$ 1,993,426	$ 30,032
School Debt Service				
Assets:				
Pooled cash and investments	$ 83,967	$ 536,002	$ 458,957	$ 161,012
Interest receivable	1,126	1,025	1,126	1,025
Taxes receivable	7,650	6,946	7,650	6,946
Due from other governments	-	3	-	3
Total assets	$ 92,743	$ 543,976	$ 467,733	$ 168,986
Liabilities:				
Amount held for others	$ 86,673	$ 537,905	$ 461,663	$ 162,915
Unavailable revenue - taxes	6,070	6,071	6,070	6,071
Total liabilities	$ 92,743	$ 543,976	$ 467,733	$ 168,986
Lincoln County TV District				
Assets:				
Pooled cash and investments	$ 3,187	$ 52,477	$ 55,185	$ 479
Liabilities:				
Amount held for others	$ 3,187	$ 52,477	$ 55,185	$ 479

LINCOLN COUNTY, NEVADA
COMBINING STATEMENT OF CHANGES IN ASSETS
AND LIABILITIES - ALL AGENCY FUNDS (CONTINUED)
Year Ended June 30, 2020

	Balance July 1, 2019	Additions	Deductions	Balance June 30, 2020
Pahranagat Fire District				
Assets:				
Pooled cash and investments	$ 14,639	$ 124,710	$ 135,084	$ 4,265
Interest receivable	39	20	39	20
Taxes receivable	1,012	1,761	1,012	1,761
Due from other governments	9,565	10,377	9,565	10,377
Total assets	$ 25,255	$ 136,868	$ 145,700	$ 16,423
Liabilities:				
Amount held for others	$ 24,517	$ 135,881	$ 145,700	$ 14,698
Unavailable revenue - taxes	738	987	-	1,725
Total liabilities	$ 25,255	$ 136,868	$ 145,700	$ 16,423
Public Land				
Assets:				
Pooled cash and investments	$ 208	$ -	$ -	$ 208
Liabilities:				
Amount held for others	$ 208	$ -	$ -	$ 208
Hospital				
Assets:				
Pooled cash and investments	$ 69,265	$ 625,231	$ 692,113	$ 2,383
Taxes receivable	9,188	8,337	9,188	8,337
Due from other governments	-	3	-	3
Total assets	$ 78,453	$ 633,571	$ 701,301	$ 10,723
Liabilities:				
Amount held for others	$ 71,165	$ 626,284	$ 694,013	$ 3,436
Unavailable revenue - taxes	7,288	7,287	7,288	7,287
Total liabilities	$ 78,453	$ 633,571	$ 701,301	$ 10,723
Panaca Fire Protection District				
Assets:				
Pooled cash and investments	$ 9,112	$ 53,080	$ 31,849	$ 30,343
Interest receivable	194	178	194	178
Taxes receivable	1,826	1,278	1,826	1,278
Total assets	$ 11,132	$ 54,536	$ 33,869	$ 31,799
Liabilities:				
Amount held for others	$ 9,717	$ 53,295	$ 32,454	$ 30,558
Unavailable revenue - taxes	1,415	1,241	1,415	1,241
Total liabilities	$ 11,132	$ 54,536	$ 33,869	$ 31,799

LINCOLN COUNTY, NEVADA
COMBINING STATEMENT OF CHANGES IN ASSETS
AND LIABILITIES - ALL AGENCY FUNDS (CONTINUED)
Year Ended June 30, 2020

	Balance July 1, 2019	Additions	Deductions	Balance June 30, 2020
Pioche Fire District				
Assets:				
Pooled cash and investments	$ 50,968	$ 70,179	$ 52,303	$ 68,844
Interest receivable	466	404	466	404
Taxes receivable	592	771	592	771
Due from other governments	10,282	5,876	10,282	5,876
Total assets	$ 62,308	$ 77,230	$ 63,643	$ 75,895
Liabilities:				
Amount held for others	$ 61,719	$ 76,459	$ 63,054	$ 75,124
Unavailable revenue - taxes	589	771	589	771
Total liabilities	$ 62,308	$ 77,230	$ 63,643	$ 75,895
Pioche Fire District Capital Projects				
Assets:				
Pooled cash and investments	$ 1,546	$ 7	$ -	$ 1,553
Interest receivable	27	20	27	20
Total assets	$ 1,573	$ 27	$ 27	$ 1,573
Liabilities:				
Amount held for others	$ 1,573	$ 27	$ 27	$ 1,573
Pioche Fire Emergency				
Assets:				
Pooled cash and investments	$ 5,509	$ 841	$ -	$ 6,350
Interest receivable	65	105	65	105
Total assets	$ 5,574	$ 946	$ 65	$ 6,455
Liabilities:				
Amount held for others	$ 5,574	$ 946	$ 65	$ 6,455
Coyote Springs GID				
Assets:				
Pooled cash and investments	$ 150,297	$ 788,999	$ 939,296	$ -
Interest receivable	1,844	-	1,844	-
Total assets	$ 152,141	$ 788,999	$ 941,140	$ -
Liabilities:				
Amount held for others	$ 152,141	$ 788,999	$ 941,140	$ -
SB 371				
Assets:				
Pooled cash and investments	$ 75	$ 400	$ 425	$ 50
Liabilities:				
Amount held for others	$ 75	$ 400	$ 425	$ 50

LINCOLN COUNTY, NEVADA
COMBINING STATEMENT OF CHANGES IN ASSETS
AND LIABILITIES - ALL AGENCY FUNDS (CONTINUED)
Year Ended June 30, 2020

	Balance July 1, 2019	Additions	Deductions	Balance June 30, 2020
Southeastern Lincoln County Habitat Conservation Plan GID (SLCHCP)				
Assets:				
Pooled cash and investments	$ 160,145	$ 21,526	$ 9,065	$ 172,606
Interest receivable	2,721	2,072	2,721	2,072
Taxes receivable	-	2	-	2
Total assets	$ 162,866	$ 23,600	$ 11,786	$ 174,680
Liabilities:				
Amount held for others	$ 162,866	$ 23,598	$ 11,786	$ 174,678
Unavailable revenue - taxes	-	2	-	2
Total liabilities	$ 162,866	$ 23,600	$ 11,786	$ 174,680
Lincoln County Fire Protection District				
Assets:				
Pooled cash and investments	$ 314,504	$ 370,510	$ 369,416	$ 315,598
Interest receivable	3,019	5,548	3,019	5,548
Taxes receivable	3,162	2,167	3,162	2,167
Due from other governments	-	43,675	-	43,675
Total assets	$ 320,685	$ 421,900	$ 375,597	$ 366,988
Liabilities:				
Amount held for others	$ 318,234	$ 419,740	$ 373,146	$ 364,828
Unavailable revenue - taxes	2,451	2,160	2,451	2,160
Total liabilities	$ 320,685	$ 421,900	$ 375,597	$ 366,988
Lincoln County Fire Protection District Emergency Fund				
Assets:				
Pooled cash and investments	$ 50,012	$ 24,444	$ -	$ 74,456
Interest receivable	520	1,076	520	1,076
Total assets	$ 50,532	$ 25,520	$ 520	$ 75,532
Liabilities:				
Amount held for others	$ 50,532	$ 25,520	$ 520	$ 75,532
Total all funds				
Assets:				
Pooled cash and investments	$ 1,243,099	$ 5,329,377	$ 5,641,830	$ 930,646
Interest receivable	10,199	10,581	10,199	10,581
Taxes receivable	58,988	53,145	58,988	53,145
Due from other governments	48,483	59,956	48,483	59,956
Total assets	$ 1,360,769	$ 5,453,059	$ 5,759,500	$ 1,054,328
Liabilities:				
Amount held for others	$ 1,314,135	$ 5,406,701	$ 5,713,604	$ 1,007,232
Unavailable revenue - taxes	46,634	46,358	45,896	47,096
Total liabilities	$ 1,360,769	$ 5,453,059	$ 5,759,500	$ 1,054,328

LINCOLN COUNTY, NEVADA
SCHEDULE OF EXPENDITURE OF FEDERAL AWARDS
JUNE 30, 2020

Federal Grantor / Pass-through Grantor / Program Title	Federal CFDA Number	Agency or Federal Pass-through Number	Pass Through to Subrecipients	Program Expenditures
U.S. Department of Agriculture				
Passed through the State of Nevada, Office of the Controller:				
Schools and Roads - Grants to Counties	10.666	N/A	$ -	$ 14,947
Direct Programs:				
Community Facilities Loans and Grants	10.766	N/A	-	27,439
Total U.S. Department of Agriculture			$ -	$ 42,386
U.S. Department of Defense				
Direct Programs:				
Airforce Agreement	12.Unknown	FA8240-20-P-R007	$ -	$ 122,000
U.S. Department of Interior				
Direct Programs:				
Payments in Lieu of Taxes	15.226	N/A	$ -	$ 1,125,317
Wildlife Resource Management	15.247	L17AC00085	-	40,081
Wildlife Restoration and Basic Hunter Education	15.611	SG20-04	-	60,950
Partners for Fish and Widlife	15.631	F16AC01210	-	644
National Wildlife Refuge Fund	15.659	N/A	-	3,292
Passed through the State of Nevada, Office of the Controller:				
Taylor Grazing	15.Unknown	N/A	-	47,503
Total U.S. Department of Interior			$ -	$ 1,277,787
U.S. Department of Justice				
Passed through the State of Nevada, Department of Health and Human Services				
Crime Victim Assistance	16.575	16575-18-029	$ -	$ 56,074
Passed through the State of Nevada, Department of Public Safety				
Edward Byrne Memorial Justice Assitance Grant Program	16.738	16-JAG-531	-	2,846
Edward Byrne Memorial Justice Assitance Grant Program	16.738	16-JAG-54	-	651
Edward Byrne Memorial Justice Assitance Grant Program	16.738	17-JAG-551	-	7,374
Total CFDA 16.738			-	10,871
Total U.S. Department of Justice			$ -	$ 66,945
U.S. Department of Labor				
Passed through Workforce Connections:				
WIOA Cluster:				
WIOA Adult Program	17.258	WC-19-LCGA-AD-DW-Y1-00	$ -	$ 110,265
WIOA Youth Activities	17.259	WC-19-LCGA-YTH-Y1-00	-	182,483
Total WIOA Cluster			-	292,748
Total U.S. Department of Labor			$ -	$ 292,748

See accompanying notes to Schedule of Expenditures of Federal Awards.

Federal Grantor / Pass-through Grantor / Program Title	Federal CFDA Number	Agency or Federal Pass-through Number	Pass Through to Subrecipients	Program Expenditures
U.S. Department of Transportation				
Direct Programs:				
Airport Improvement Program	20.106	3-32-0034-010-2018	$ -	$ 99,294
Passed through the State of Nevada, Department of Transportation:				
Formula Grants for Rural Areas and Tribal Transit Program	20.509	PR206-04-802	-	3,588
Formula Grants for Rural Areas and Tribal Transit Program	20.509	PR507-19-802	-	45,058
Formula Grants for Rural Areas and Tribal Transit Program	20.509	PR404-18-802	-	20,233
			-	68,879
Passed through the State of Nevada, Department of Public Safety:				
Highway Safety Cluster:				
State and Community Highway Safety	20.600	JF-2020-LICSO-00019	-	17,168
State and Community Highway Safety	20.600	TS-2020-LICSO-00036	-	27,052
			-	44,220
National Priority Safety Programs	20.616	JF-2020-LICSO-00019	-	6,987
Total Highway Safety Cluster			-	51,207
Total U.S. Department of Transportation			$ -	$ 219,380
U.S. Department of Treasury				
Passed through the State of Nevada, Office of the Governor:				
Coronavirus Relief Fund	21.019	N/A	$ 7,032	$ 11,835
Total U.S. Department of Treasury			$ 7,032	$ 11,835
Institute of Museum and Library Services				
Passed through the Nevada State Library, Archives, and Public Records:				
Grants to States	45.310	45310-18	$ -	$ 1,352
Grants to States	45.310	45310-19	-	3,523
Total Institute of Museum and Library Services			$ -	$ 4,875
U.S. Department of Energy				
Passed through the State of Nevada, Department of Public Safety:				
Environmental Remediation and Waste Procesing and Disposal	81.104	8110417	$ -	$ 18,624
Environmental Remediation and Waste Procesing and Disposal	81.104	8110418E-7018	-	6,359
Environmental Remediation and Waste Procesing and Disposal	81.104	8110418E-7019	-	47,146
			-	72,129
Misc. Federal Assistance Actions	81.502	8150216A	-	16,276
Total U.S. Department of Energy			$ -	$ 88,405

See accompanying notes to Schedule of Expenditures of Federal Awards.

Federal Grantor / Pass-through Grantor / Program Title	Federal CFDA Number	Agency or Federal Pass-through Number	Pass Through to Subrecipients	Program Expenditures
U.S. Department of Health and Human Services				
Passed through the State of Nevada, Department of Health and Human Services:				
Aging Cluster:				
Special Programs for the Aging, Title III, Part B, Grants for Supportive Services and Senior Centers	93.044	10-000-02-BC-20	$ -	$ 15,017
Special Programs for the Aging, Title III, Part C, Nutrition Services	93.045	10-000-04-2H-19	-	30,790
Special Programs for the Aging, Title III, Part C, Nutrition Services	93.045	10-000-04-24-20	-	30,587
Special Programs for the Aging, Title III, Part C, Nutrition Services	93.045	10-000-07-1X-19	-	4,408
Special Programs for the Aging, Title III, Part C, Nutrition Services	93.045	10-000-07-1X-20	-	26,880
			-	92,665
Nutrition Services Incentive Program	93.053	10-000-57-NX-19	-	6,132
Nutrition Services Incentive Program	93.053	10-000-57-NX-20	-	9,000
Passed through the State of Nevada, Department of Agriculture Food Distribution Program:				
Nutrition Services Incentive Program	93.053	N/A	-	3,785
			-	18,917
Aging Cluster Total			-	126,599
Passed through the State of Nevada, Department of Health and Human Services:				
Community Services Block Grant	93.569	DO 1061	-	31,664
Community Services Block Grant	93.569	DO 5109	-	13,695
			-	45,359
Total U.S. Department of Health and Human Services			$ -	$ 171,958
U.S. Department of Homeland Security				
Passed through the State of Nevada, Department of Public Safety:				
Emergency Management Performance Grants	97.042	97042.19	$ -	$ 7,722
Emergency Management Performance Grants	97.042	97042.20	-	17,180
Total U.S. Department of Homeland Security			$ -	$ 24,902
Total Federal Financial Assistance			$ 7,032	$ 2,323,221

See accompanying notes to Schedule of Expenditures of Federal Awards.

NOTE 1 - BASIS OF PRESENTATION

The accompanying schedule of expenditures of federal awards (the Schedule) includes the federal grant activity of Lincoln County, Nevada (the county) under programs of the federal government for the year ended June 30, 2020. The information in this Schedule is presented in accordance with the requirements of Title 2 U.S. *Code of Federal Regulations* Part 200, *Uniform Administrative Requirements, Cost Principles, and Audit Requirements for Federal Awards* (Uniform Guidance). Because the Schedule presents only a selected portion of the operations of the County, it is not intended to and does not present the financial position, changes in net position, or cash flows of Lincoln County, Nevada.

NOTE 2 – SUMMARY OF SIGNIFICANT ACCOUNTING POLICIES

Governmental fund types account for the County's federal grant activity. Therefore, expenditures in the schedule of expenditures of federal awards are recognized on the modified accrual basis – when they become a demand on the on current available financial resources. The County's summary of significant accounting policies is presented in Note A in the County's basic financial statements.

Grant Pass-through entity identifying numbers are presented where available.

NOTE 3 – INDIRECT COST RATE

Lincoln County, Nevada has elected not to use the 10% De Minimis indirect cost rate allowed under the Uniform Guidelines.

NOTE 4 - FOOD DISTRIBUTION

Non-monetary assistance is reported in the schedule at the fair market value of the commodities received and disbursed. At June 30, 2020 the County had food commodities totaling $0.00 in inventory.

NOTE 5 - U.S. DEPARTMENT OF AGRICULTURE

The County issued a single registered Water Revenue bond purchased by the U.S. Department of Agriculture (CFDA 10.760). The following is a summary of activity for the year:

Balance at July 1, 2019	Additions	Deletions	Balance at June 30, 2020
$ 7,336	$	$ 7,336	$ 0

The County issued a single registered Sewer Revenue bond purchased by the U.S. Department of Agriculture (CFDA 10.760). The following is a summary of activity for the year:

Balance at July 1, 2019	Additions	Deletions	Balance at June 30, 2020
$ 180,783	$ 0	$ 3,294	$ 177,489

NOTE 6 – RELATIONSHIP TO BASIC FINANCIAL STATEMENTS

Expenditures of federal awards have been included in the individual funds of the County as follows:

General Fund	$ 149,461
Major Special Revenue Fund - Road	14,947
Major Special Revenue Fund - Land Act Special Use	10,871
Major Special Revenue Fund - County Grant	793,928
Nonmajor Special Revenue Funds	1,306,409
Nonmajor Capital Projects Funds	102
Agency Funds	47,503
	$ 2,323,221

NOTE 7 – SUBRECIPIENTS

Lincoln County, Nevada provided federal awards to subrecipients as follows:

Program Title	CFDA Number	Federal Subrecipient Expenditures
Lincoln County Fire Protection District:		
Coronavirus Relief Fund	21.019	$ 7,032

LINCOLN COUNTY, NEVADA
SUMMARY SCHEDULE OF PRIOR YEAR AUDIT FINDINGS
FOR THE YEAR ENDED JUNE 30, 2020

FINANCIAL STATEMENT FINDINGS

There were no financial statement findings.

FINDINGS AND QUESTIONED COSTS - MAJOR FEDERAL AWARDS PROGRAMS

There were no findings for federal award programs.

DANIEL C. McARTHUR, LTD.
Certified Public Accountant

Quail Park III • 501 So. Rancho Dr., Ste. E-30 • Las Vegas, NV 89106 • (702) 385-1899 • FAX (702) 385-9619

INDEPENDENT AUDITOR'S REPORT ON INTERNAL CONTROL OVER FINANCIAL REPORTING AND ON COMPLIANCE AND OTHER MATTERS BASED ON AN AUDIT OF FINANCIAL STATEMENTS PERFORMED IN ACCORDANCE WITH *GOVERNMENT AUDITING STANDARDS*

Honorable Board of County Commissioners
Lincoln County, Nevada
Pioche, Nevada

We have audited, in accordance with the auditing standards generally accepted in the United States of America and the standards applicable to financial audits contained in *Government Auditing Standards*, issued by the Comptroller General of the United States, the financial statements of the governmental activities, the business-type activities, each major fund, and the aggregate remaining fund information of Lincoln County, Nevada (the County), as of and for the year ended June 30, 2020, and the related notes to the financial statements, which collectively comprise the County's basic financial statements, and have issued our report thereon dated November 25, 2020.

Internal Control over Financial Reporting

In planning and performing our audit of the financial statements, we considered the County's internal control over financial reporting (internal control) as a basis for designing audit procedures that are appropriate in the circumstances for the purpose of expressing our opinions on the financial statements, but not for the purpose of expressing an opinion on the effectiveness of the County's internal control. Accordingly, we do not express an opinion on the effectiveness of the County's internal control.

A *deficiency in internal control* exists when the design or operation of a control does not allow management or employees, in the normal course of performing their assigned functions, to prevent, or detect and correct misstatements on a timely basis. A *material weakness* is a deficiency, or a combination of deficiencies, in internal control, such that there is a reasonable possibility that a material misstatement of the entity's financial statements will not be prevented, or detected and corrected on a timely basis. A *significant deficiency* is a deficiency, or a combination of deficiencies, in internal control that is less severe than a material weakness, yet important enough to merit attention by those charged with governance.

Our consideration of internal control was for the limited purpose described in the first paragraph of this section and was not designed to identify all deficiencies in internal control that might be material weaknesses or, significant deficiencies. Given these limitations, during our audit we did not identify any deficiencies in internal control that we consider to be material weaknesses. However, material weaknesses may exist that have not been identified.

Compliance and Other Matters

As part of obtaining reasonable assurance about whether the County's financial statements are free from material misstatement, we performed tests of its compliance with certain provisions of laws, regulations, contracts, and grant agreements, noncompliance with which could have a direct and material effect on the financial statements. However, providing an opinion on compliance with those provisions was not an objective of our audit, and accordingly, we do not express such an opinion. The results of our tests disclosed no instances of noncompliance or other matters that are required to be reported under *Government Auditing Standards.*

Purpose of this Report

The purpose of this report is solely to describe the scope of our testing of internal control and compliance and the results of that testing, and not to provide an opinion on the effectiveness of the entity's internal control or on compliance. This report is an integral part of an audit performed in accordance with *Government Auditing Standards* in considering the entity's internal control and compliance. Accordingly, this communication is not suitable for any other purpose.

Las Vegas, Nevada
November 25, 2020

DANIEL C. McARTHUR, LTD.
Certified Public Accountant

Quail Park III • 501 So. Rancho Dr., Ste. E-30 • Las Vegas, NV 89106 • (702) 385-1899 • FAX (702) 385-9619

INDEPENDENT AUDITOR'S REPORT ON COMPLIANCE FOR EACH MAJOR PROGRAM; REPORT ON INTERNAL CONTROL OVER COMPLIANCE; AND REPORT ON SCHEDULE OF EXPENDITURES OF FEDERAL AWARDS REQUIRED BY THE UNIFORM GUIDANCE

Honorable Board of County Commissioners
Lincoln County, Nevada
Pioche, Nevada

Report on Compliance for Each Major Federal Program

We have audited Lincoln County, Nevada's (the County) compliance with the types of compliance requirements described in the *OMB Compliance Supplement* that could have a direct and material effect on each of the County's major federal programs for the year ended June 30, 2020. The County's major federal programs are identified in the summary of auditor's results section of the accompanying schedule of findings and questioned costs.

Management's Responsibility

Management is responsible for compliance with federal statutes, regulations, and the terms and conditions of its federal awards applicable to its federal programs.

Auditor's Responsibility

Our responsibility is to express an opinion on compliance for each of the County's major federal programs based on our audit of the types of compliance requirements referred to above. We conducted our audit of compliance in accordance with auditing standards generally accepted in the United States of America; the standards applicable to financial audits contained in *Government Auditing Standards*, issued by the Comptroller General of the United States; and the audit requirements of Title 2 *U.S. Code of Federal Regulations* Part 200, *Uniform Administrative Requirements, Cost Principles, and Audit Requirements for Federal Awards* (Uniform Guidance). Those standards and the Uniform Guidance require that we plan and perform the audit to obtain reasonable assurance about whether noncompliance with the types of compliance requirements referred to above that could have a direct and material effect on a major federal program occurred. An audit includes examining, on a test basis, evidence about the County's compliance with those requirements and performing such other procedures as we considered necessary in the circumstances.

We believe that our audit provides a reasonable basis for our opinion on compliance for each major federal program. However, our audit does not provide a legal determination of the County's compliance.

Opinion on Each Major Federal Program

In our opinion, the County complied, in all material respects, with the types of compliance requirements referred to above that could have a direct and material effect on each of its major federal programs for the year ended June 30, 2020.

Report on Internal Control over Compliance

Management of the County is responsible for establishing and maintaining effective internal control over compliance with the types of compliance requirements referred to above. In planning and performing our audit of compliance, we considered the County's internal control over compliance with the types of requirements that could have a direct and material effect on each major federal program to determine the auditing procedures that are appropriate in the circumstances for the purpose of expressing an opinion on compliance for each major federal program and to test and report on internal control over compliance in accordance with Uniform Guidance, but not for the purpose of expressing an opinion on the effectiveness of internal control over compliance. Accordingly, we do not express an opinion on the effectiveness of the County's internal control over compliance.

A *deficiency in internal control over compliance* exists when the design or operation of a control over compliance does not allow management or employees, in the normal course of performing their assigned functions, to prevent, or detect and correct, noncompliance with a type of compliance requirement of a federal program on a timely basis. A *material weakness in internal control over compliance* is a deficiency, or combination of deficiencies, in internal control over compliance, such that there is a reasonable possibility that material noncompliance with a type of compliance requirement of a federal program will not be prevented, or detected and corrected, on a timely basis. A *significant deficiency in internal control over compliance* is a deficiency, or a combination of deficiencies, in internal control over compliance with a type of compliance requirement of a federal program that is less severe than a material weakness in internal control over compliance, yet important enough to merit attention by those charged with governance.

Our consideration of internal control over compliance was for the limited purpose described in the first paragraph of this section and was not designed to identify all deficiencies in internal control over compliance that might be material weaknesses or significant deficiencies. We did not identify any deficiencies in internal control over compliance that we consider to be material weaknesses. However, material weaknesses may exist that have not been identified.

The purpose of this report on internal control over compliance is solely to describe the scope of our testing of internal control over compliance and the results of that testing based on the requirements of the Uniform Guidance. Accordingly, this report is not suitable for any other purpose.

Report on Schedule of Expenditures of Federal Awards Required by the Uniform Guidance

We have audited the financial statements of the County as of and for the year ended June 30, 2020, and have issued our report thereon dated November 25, 2020, which contained an unmodified opinion on those financial statements. Our audit was conducted for the purpose of forming an opinion on the financial statements as a whole. The accompanying schedule of expenditures of federal awards is presented for purposes of additional analysis as required by the Uniform Guidance and is not a required part of the financial statements. Such information is the responsibility of management and was derived from and relates directly to the underlying accounting and other records used to prepare the financial statements. The information has been subjected to the auditing procedures applied in the audit of the financial statements and certain additional procedures, including comparing and reconciling such information directly to the underlying accounting and other records used to prepare the financial statements or to the financial statements themselves, and other additional procedures in accordance with auditing standards generally accepted in the United States of America. In our opinion, the schedule of expenditures of federal awards is fairly stated in all material respects in relation to the financial statements as a whole.



Las Vegas, Nevada
March 22, 2021

SUMMARY OF AUDITOR'S RESULTS

Financial Statements

Type of auditor's report issued	Unmodified
Internal control over financial reporting:	
Material weakness identified	No
Significant deficiency identified not considered to be material weakness	No
Noncompliance material to financial statements	No

Federal Awards

Internal control over major programs:	
Material weakness identified	No
Significant deficiency identified not considered to be material weakness	No
Type of auditor's report issued on compliance for major programs	Unmodified
Audit findings required to be reported in accordance with 2CFR 200.516(a)	No

Identification of Major Programs

Payments In Lieu of Taxes	CFDA No. 15.226

Dollar threshold to distinguishing types A and B Programs	$750,000
Auditee qualified as low-risk auditee	Yes

FINANCIAL STATEMENT FINDINGS

There were no findings for the financial statement.

FINDINGS AND QUESTIONED COSTS-MAJOR FEDERAL AWARDS PROGRAMS

There were no findings for federal awards programs.

DANIEL C. McARTHUR, LTD.
Certified Public Accountant

Quail Park III • 501 So. Rancho Dr., Ste. E-30 • Las Vegas, NV 89106 • (702) 385-1899 • FAX (702) 385-9619

AUDITOR'S COMMENTS

Honorable Board of County Commissioners
Lincoln County, Nevada
Pioche, Nevada

In connection with our audit of the financial statements of the governmental activities, the business-type activities, each major fund, and the aggregate remaining fund information of Lincoln County, Nevada (the County) as of and for the year ended June 30, 2020, and the related notes to the financial statements, nothing came to our attention that caused us to believe that the County failed to comply with the specific requirements of Nevada Revised Statutes referenced below insofar as they relate to accounting matters except as noted below. However, our audit was not directed primarily toward obtaining knowledge of such noncompliance. Accordingly, had we performed additional procedures, other matters may have come to our attention regarding the County's noncompliance with the requirements of Nevada Revised Statutes noted below, insofar as they relate to accounting matters.

CURRENT YEAR STATUTE COMPLIANCE

Expenditures in Excess of Appropriations

Per NRS 354.626, the County is required to report expenditures that exceeded budgeted appropriations at the function level for the General Fund, Special Revenue Funds, and Capital Project Funds. Enterprise funds may not exceed budget appropriations at the fund level. For the year ending June 30, 2020, the County had the following expenditures over appropriations that are required to be reported.

Alamo Town – Public works function	$	339
Airport – Public works function	$	952
Detention Center Enterprise Fund	$	39,303

The over expenditures in the funds relate to expenses that came in after year end that caused the functions to go over budget.

Deficit Fund Balance/Net Position

Legal Aid Services Fund	$	3,195
Detention Center Enterprise Fund	$	2,503,285
Building Department Enterprise Fund	$	89,397

The deficit net position of the Detention Center and Building Department Enterprise funds are due to the individual fund's proportionate share of the net pension liability of the Public Employees' Retirement System of the State of Nevada of $3,126,874 and $94,488.

PROGRESS ON PRIOR YEAR STATUTE COMPLIANCE

The County had similar findings in the current year as listed above.

CURRENT YEAR RECOMMENDATIONS

We noted no material weakness and reported no significant deficiencies in internal controls.

PRIOR YEAR RECOMMENDATIONS

We noted no material weakness and reported no significant deficiencies in internal controls in the prior year.

NEVADA REVISED STATUTE 354.6115 - STABILIZATION FUND

The County created a stabilization fund in accordance with Nevada Revised Statute 354.6115, "Fund to stabilize operations of local government and mitigate effects of natural disaster". The fund is reported on pages 236 and 237 of the financial statements as an "internally reported (budgetary basis) fund reported as part of the General Fund for external reporting purposes. Compliance with Nevada Revised Statutes is contained in Note C1 to the financial statements.

NEVADA REVISED STATUTE 354.5989 – BUSINESS LICENSES

Nevada Revised Statutes 354.624.4(a) requires a schedule of all fees imposed by the County which are subject to the provisions of NRS 354.5989 be addressed by the independent auditor. During the year ended June 30, 2020, the County did not raise fees on business licenses subject to the limitation of NRS 354.5989. The County business fee is $40.

NEVADA REVISED STATUTE 354.59815 – CAPITAL PROJECTS FUND (Special Ad Valorem)

Capital Improvements Fund

The County established the Capital Improvements Fund in accordance with Nevada Revised Statutes 354.59815. Compliance with Nevada Revised Statutes is contained in Note C1 to the financial statements. The County does not plan to accumulate money in the fund. Projects funded during the year were as follows:

Intergovernmental – Payment to City	$	8,169
Transfer to the Pioche Town Capital Projects fund	$	3,502
Transfer to the Alamo Town Capital Projects fund	$	2,334
Transfer to the Panaca Town Capital Projects fund	$	4,667
Transfer to the Vehicle Capital Projects fund used to purchase vehicles	$	110,000

Pioche Town Capital Projects Fund

The County established the Pioche Town Capital Projects Fund in accordance with Nevada Revised Statutes 354.59815. Compliance with Nevada Revised Statutes is contained in Note C1 to the financial statements. The County does not plan to accumulate money in the fund. Projects funded during the year were as follows:

Maintenance equipment	$	3,752

Panaca Town Capital Projects Fund

The County established the Panaca Town Capital Projects Fund in accordance with Nevada Revised Statutes 354.59815. Compliance with Nevada Revised Statutes is contained in Note C1 to the financial statements. The County does not plan to accumulate money in the fund. There were no projects funded during the year.

Alamo Town Capital Projects Fund

The County established the Alamo Town Capital Projects Fund in accordance with Nevada Revised Statutes 354.59815. Compliance with Nevada Revised Statutes is contained in Note C1 to the financial statements. The County does not plan to accumulate money in the fund. There were no projects funded during the year.

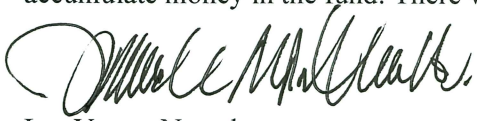

Las Vegas, Nevada
November 25, 2020

LINCOLN COUNTY, NEVADA

REPORT ON FINANCIAL STATEMENTS WITH SUPPLEMENTAL INFORMATION AND INFORMATION PERTAINING TO FEDERAL AWARDS

JUNE 30, 2019

LINCOLN COUNTY, NEVADA
REPORT ON FINANCIAL STATEMENTS
YEAR ENDED JUNE 30, 2019
TABLE OF CONTENTS

	PAGE
INTRODUCTORY SECTION	
Organization	1
FINANCIAL SECTION	
Independent Auditor's Report	2-4
Management's Discussion and Analysis	5-13
BASIC FINANCIAL STATEMENTS:	
GOVERNMENT-WIDE FINANCIAL STATEMENTS:	
Statement of Net Position	14
Statement of Activities	15
FUND FINANCIAL STATEMENTS:	
GOVERNMENTAL FUNDS:	
Balance Sheet	16-17
Reconciliation of the Governmental Funds Balance Sheet to the Statement of Net Position	18
Statement of Revenues, Expenditures, and Changes in Fund Balances	19-20
Reconciliation of the Statement of Revenues, Expenditures, and Changes in Fund Balance of Governmental Funds to the Statement of Activities	21
PROPRIETARY FUNDS:	
Statement of Net Position	22-23
Statement of Revenues, Expenses, and Changes in Net Position	24-25
Statement of Cash Flows	26-27
FIDUCIARY FUND:	
Statement of Fiduciary Net Position	28
Statement of Changes in Fiduciary Net Position	29
Notes to the Basic Financial Statements	30-60
REQUIRED SUPPLEMENTARY INFORMATION:	
Schedule of Revenues, Expenditures, and Changes in Fund Balance - Budget (GAAP Basis) and Actual	
General Fund (Budgetary Basis)	61-66
Road Special Revenue Fund	67
Federal In Lieu Tax Special Revenue Fund	68
Lincoln County Water District Water Resources Special Revenue Fund	69
Lincoln County Land Act Special Revenue Fund	70
County Grant Special Revenue Fund	71
Reconciliation of the General Fund (Budgetary Basis) to the General Fund (GAAP Basis)	72
Schedule of Changes in the County's Total OPEB Liability and Related Ratios	73
Schedule of the County's Contributions to the Public Employees' Retirement System of the State of Nevada	74
Schedule of the County's Porportionate Share of the Net Pension Liability	75
Notes to Required Supplementary Information	76
SUPPLEMENTARY INFORMATION:	
COMBINING AND INDIVIDUAL FUND STATEMENTS AND SCHEDULES:	
NONMAJOR GOVERNMENTAL FUNDS:	
Combining Balance Sheet	77
Combining Statement of Revenues, Expenditures, and Changes in Fund Balance	78
GOVERNMENTAL FUNDS:	
Reconciliation of the General Fund (Budgetary Basis) to the General Fund (GAAP Basis) - Balance Sheet	79

TABLE OF CONTENTS (CONTINUED)

SUPPLEMENTARY INFORMATION (Continued):

COMBINING AND INDIVIDUAL FUND STATEMENTS AND SCHEDULES (Continued):

MAJOR GOVERNMENTAL FUNDS:

General Fund:

Comparative Balance Sheets 80
Schedule of Revenues, Expenditures, and Changes in Fund Balance - Budget (Budgetary Basis) and Actual 81
Schedule of Revenues Compared to Budget (Budgetary Basis) 82
Schedule of Expenditures Compared to Budget (Budgetary Basis) 83-86

Road Special Revenue Fund:

Comparative Balance Sheets 87
Schedule of Revenues, Expenditures, and Changes in Fund Balance - Budget (GAAP Basis) and Actual 88

Federal In Lieu Tax Special Revenue Fund:

Comparative Balance Sheets 89
Schedule of Revenues, Expenditures, and Changes in Fund Balance - Budget (GAAP Basis) and Actual 90-91

Lincoln County Water District Water Resources Special Revenue Fund:

Comparative Balance Sheets 92
Schedule of Revenues, Expenditures, and Changes in Fund Balance - Budget (GAAP Basis) and Actual 93

Lincoln County Land Act Special Use Revenue Fund:

Comparative Balance Sheets 94
Schedule of Revenues, Expenditures, and Changes in Fund Balance - Budget (GAAP Basis) and Actual 95

County Grant Special Revenue Fund:

Comparative Balance Sheets 96
Schedule of Revenues, Expenditures, and Changes in Fund Balance - Budget (GAAP Basis) and Actual 97

MAJOR ENTERPRISE FUND:

Detention Center Enterprise Fund:

Comparative Statement of Net Position 98
Schedule of Revenues, Expenses and Changes in Net Position 99
Comparative Statement of Cash Flows 100

Pioche Public Utility Electric:

Comparative Statement of Net Position 101
Schedule of Revenues, Expenses and Changes in Net Position 102
Comparative Statement of Cash Flows 103

Solid Waste:

Statement of Net Position 104
Schedule of Revenues, Expenses and Changes in Net Position 105
Statement of Cash Flows 106

NONMAJOR SPECIAL REVENUE FUNDS:

Combining Balance Sheet 107-116
Combining Schedule of Revenues, Expenditures, and Changes in Fund Balances 117-126

Pioche Town:

Comparative Balance Sheets 127
Schedule of Revenues, Expenditures, and Changes in Fund Balance - Budget (GAAP Basis) and Actual 128-129

Alamo Town:

Comparative Balance Sheets 130
Schedule of Revenues, Expenditures, and Changes in Fund Balance - Budget (GAAP Basis) and Actual 131-132

Panaca Town:

Comparative Balance Sheets 133
Schedule of Revenues, Expenditures, and Changes in Fund Balance - Budget (GAAP Basis) and Actual 134-135

Resource Development Authority:

Comparative Balance Sheets 136
Schedule of Revenues, Expenditures, and Changes in Fund Balance - Budget (GAAP Basis) and Actual 137

County Library:

Comparative Balance Sheets 138
Schedule of Revenues, Expenditures, and Changes in Fund Balance - Budget (GAAP Basis) and Actual 139

SUPPLEMENTARY INFORMATION (Continued):
COMBINING AND INDIVIDUAL FUND STATEMENTS AND SCHEDULES (Continued):
NONMAJOR SPECIAL REVENUE FUNDS:
Museum:
Comparative Balance Sheets 140
Schedule of Revenues, Expenditures, and Changes in Fund Balance - Budget (GAAP Basis) and Actual 141
Senior Nutrition:
Comparative Balance Sheets 142
Schedule of Revenues, Expenditures, and Changes in Fund Balance - Budget (GAAP Basis) and Actual 143
Transportation:
Comparative Balance Sheets 144
Schedule of Revenues, Expenditures, and Changes in Fund Balance - Budget (GAAP Basis) and Actual 145
Agricultural Extension:
Comparative Balance Sheets 146
Schedule of Revenues, Expenditures, and Changes in Fund Balance - Budget (GAAP Basis) and Actual 147
Indigent:
Comparative Balance Sheets 148
Schedule of Revenues, Expenditures, and Changes in Fund Balance - Budget (GAAP Basis) and Actual 149
Medical Indigent:
Comparative Balance Sheets 150
Schedule of Revenues, Expenditures, and Changes in Fund Balance - Budget (GAAP Basis) and Actual 151
China Springs:
Comparative Balance Sheets 152
Schedule of Revenues, Expenditures, and Changes in Fund Balance - Budget (GAAP Basis) and Actual 153
Ambulance:
Comparative Balance Sheets 154
Schedule of Revenues, Expenditures, and Changes in Fund Balance - Budget (GAAP Basis) and Actual 155
Regional Transportation Commission:
Comparative Balance Sheets 156
Schedule of Revenues, Expenditures, and Changes in Fund Balance - Budget (GAAP Basis) and Actual 157
Room Tax:
Comparative Balance Sheets 158
Schedule of Revenues, Expenditures, and Changes in Fund Balance - Budget (GAAP Basis) and Actual 159
Legal Aid Services:
Comparative Balance Sheets 160
Schedule of Revenues, Expenditures, and Changes in Fund Balance - Budget (GAAP Basis) and Actual 161
Forensic Services:
Comparative Balance Sheets 162
Schedule of Revenues, Expenditures, and Changes in Fund Balance - Budget (GAAP Basis) and Actual 163
Administrative Assessment:
Comparative Balance Sheets 164
Schedule of Revenues, Expenditures, and Changes in Fund Balance - Budget (GAAP Basis) and Actual 165
Forfeiture:
Comparative Balance Sheets 166
Schedule of Revenues, Expenditures, and Changes in Fund Balance - Budget (GAAP Basis) and Actual 167
Recorder Technology:
Comparative Balance Sheets 168
Schedule of Revenues, Expenditures, and Changes in Fund Balance - Budget (GAAP Basis) and Actual 169
L.C. Housing Authority:
Comparative Balance Sheets 170
Schedule of Revenues, Expenditures, and Changes in Fund Balance - Budget (GAAP Basis) and Actual 171
Alamo Clinic:
Comparative Balance Sheets 172
Schedule of Revenues, Expenditures, and Changes in Fund Balance - Budget (GAAP Basis) and Actual 173
Fair Board:
Comparative Balance Sheets 174
Schedule of Revenues, Expenditures, and Changes in Fund Balance - Budget (GAAP Basis) and Actual 175

SUPPLEMENTARY INFORMATION (Continued):
COMBINING AND INDIVIDUAL FUND STATEMENTS AND SCHEDULES (Continued):
NONMAJOR SPECIAL REVENUE FUNDS (Continued):

Multi-species Habitat Conservation :
Comparative Balance Sheets 176
Schedule of Revenues, Expenditures, and Changes in Fund Balance - Budget (GAAP Basis) and Actual 177

Multi-species Habitat Conservation Section 7:
Comparative Balance Sheets 178
Schedule of Revenues, Expenditures, and Changes in Fund Balance - Budget (GAAP Basis) and Actual 179

Youth Activities Counsel:
Comparative Balance Sheet 180
Schedule of Revenues, Expenditures, and Changes in Fund Balance - Budget (GAAP Basis) and Actual 181

Genetic Marker Testing :
Comparative Balance Sheet 182
Schedule of Revenues, Expenditures, and Changes in Fund Balance - Budget (GAAP Basis) and Actual 183

Public Improvement:
Comparative Balance Sheet 184
Schedule of Revenues, Expenditures, and Changes in Fund Balance - Budget (GAAP Basis) and Actual 185

Airport:
Comparative Balance Sheet 186
Schedule of Revenues, Expenditures, and Changes in Fund Balance - Budget (GAAP Basis) and Actual 187

Panaca Town Building:
Comparative Balance Sheet 188
Schedule of Revenues, Expenditures, and Changes in Fund Balance - Budget (GAAP Basis) and Actual 189

Court Facility Fees:
Comparative Balance Sheet 190
Schedule of Revenues, Expenditures, and Changes in Fund Balance - Budget (GAAP Basis) and Actual 191

Tri-County Weed Control:
Comparative Balance Sheet 192
Schedule of Revenues, Expenditures, and Changes in Fund Balance - Budget (GAAP Basis) and Actual 193

Lincoln County Land Act - General:
Comparative Balance Sheet 194
Schedule of Revenues, Expenditures, and Changes in Fund Balance - Budget (GAAP Basis) and Actual 195

Lincoln County Land Act - Planning and Development:
Comparative Balance Sheet 196
Schedule of Revenues, Expenditures, and Changes in Fund Balance - Budget (GAAP Basis) and Actual 197

Lincoln County Land Act - Education:
Comparative Balance Sheet 198
Schedule of Revenues, Expenditures, and Changes in Fund Balance - Budget (GAAP Basis) and Actual 199

Lincoln County Land Act - Grant Match:
Comparative Balance Sheet 200
Schedule of Revenues, Expenditures, and Changes in Fund Balance - Budget (GAAP Basis) and Actual 201

Lincoln County Water - General:
Comparative Balance Sheet 202
Schedule of Revenues, Expenditures, and Changes in Fund Balance - Budget (GAAP Basis) and Actual 203

Lincoln County Water - Special Projects:
Comparative Balance Sheet 204
Schedule of Revenues, Expenditures, and Changes in Fund Balance - Budget (GAAP Basis) and Actual 205

Lincoln County Water - Planning and Development:
Comparative Balance Sheet 206
Schedule of Revenues, Expenditures, and Changes in Fund Balance - Budget (GAAP Basis) and Actual 207

Lincoln County Water - Special Use:
Comparative Balance Sheet 208
Schedule of Revenues, Expenditures, and Changes in Fund Balance - Budget (GAAP Basis) and Actual 209

SUPPLEMENTARY INFORMATION (Continued):
COMBINING AND INDIVIDUAL FUND STATEMENTS AND SCHEDULES (Continued):
NONMAJOR SPECIAL REVENUE FUNDS (Continued):
Lincoln County Water - Grant Match:
Comparative Balance Sheet 210
Schedule of Revenues, Expenditures, and Changes in Fund Balance - Budget (GAAP Basis) and Actual 211
Lincoln County Water District - General :
Comparative Balance Sheets 212
Schedule of Revenues, Expenditures, and Changes in Fund Balance - Budget (GAAP Basis) and Actual 213
Lincoln County Water District - Planning & Development :
Comparative Balance Sheets 214
Schedule of Revenues, Expenditures, and Changes in Fund Balance - Budget (GAAP Basis) and Actual 215
Lincoln County Water District - Special Projects :
Comparative Balance Sheets 216
Schedule of Revenues, Expenditures, and Changes in Fund Balance - Budget (GAAP Basis) and Actual 217
Assessor Technology:
Comparative Balance Sheets 218
Schedule of Revenues, Expenditures, and Changes in Fund Balance - Budget (GAAP Basis) and Actual 219
District Court Technology:
Comparative Balance Sheets 220
Schedule of Revenues, Expenditures, and Changes in Fund Balance - Budget (GAAP Basis) and Actual 221
District Court Specialty Court:
Comparative Balance Sheets 222
Schedule of Revenues, Expenditures, and Changes in Fund Balance - Budget (GAAP Basis) and Actual 223
Court Security Fee:
Comparative Balance Sheets 224
Schedule of Revenues, Expenditures, and Changes in Fund Balance - Budget (GAAP Basis) and Actual 225
District Court Enrichment:
Comparative Balance Sheets 226
Schedule of Revenues, Expenditures, and Changes in Fund Balance - Budget (GAAP Basis) and Actual 227
Nuclear Waste Special Revenue Fund:
Comparative Balance Sheets 228
Schedule of Revenues, Expenditures, and Changes in Fund Balance - Budget (GAAP Basis) and Actual 229
Property Management:
Comparative Balance Sheets 230
Schedule of Revenues, Expenditures, and Changes in Fund Balance - Budget (GAAP Basis) and Actual 231
Internally Reported (Budgetary Basis) Funds Reported as Part of the General Fund for External Reporting Purposes (Continued):
Combining Balance Sheet 232-233
Combining Schedule of Revenues, Expenditures and Changes in Fund Balance 234-235
Stabilization:
Comparative Balance Sheets 236
Schedule of Revenues, Expenditures, and Changes in Fund Balance - Budget (GAAP Basis) and Actual 237
Planning:
Comparative Balance Sheets 238
Schedule of Revenues, Expenditures, and Changes in Fund Balance - Budget (GAAP Basis) and Actual 239
Rachel Jones Memorial Cemetery:
Comparative Balance Sheets 240
Schedule of Revenues, Expenditures, and Changes in Fund Balance - Budget (GAAP Basis) and Actual 241
Flood Control:
Comparative Balance Sheets 242
Schedule of Revenues, Expenditures, and Changes in Fund Balance - Budget (GAAP Basis) and Actual 243
Special Projects:
Comparative Balance Sheets 244
Schedule of Revenues, Expenditures, and Changes in Fund Balance - Budget (GAAP Basis) and Actual 245

SUPPLEMENTARY INFORMATION (Continued):
COMBINING AND INDIVIDUAL FUND STATEMENTS AND SCHEDULES (Continued):
Internally Reported (Budgetary Basis) Funds Reported as Part of the General Fund for External Reporting Purposes (Continued):
Lincoln County Land Act - Emergency Disaster:
Comparative Balance Sheet 246
Schedule of Revenues, Expenditures, and Changes in Fund Balance - Budget (GAAP Basis) and Actual 247
Lincoln County Water - Emergency Disaster:
Comparative Balance Sheet 248
Schedule of Revenues, Expenditures, and Changes in Fund Balance - Budget (GAAP Basis) and Actual 249
NONMAJOR CAPITAL PROJECTS FUNDS:
Combining Balance Sheet 250-252
Combining Statement of Revenues, Expenditures, and Changes in Fund Balances 253-255
Capital Improvements:
Comparative Balance Sheets 256
Schedule of Revenues, Expenditures, and Changes in Fund Balance - Budget (GAAP Basis) and Actual 257
Pioche Town Grant:
Comparative Balance Sheets 258
Schedule of Revenues, Expenditures, and Changes in Fund Balance - Budget (GAAP Basis) and Actual 259
Pioche Town:
Comparative Balance Sheets 260
Schedule of Revenues, Expenditures, and Changes in Fund Balance - Budget (GAAP Basis) and Actual 261
Alamo Town:
Comparative Balance Sheets 262
Schedule of Revenues, Expenditures, and Changes in Fund Balance - Budget (GAAP Basis) and Actual 263
Panaca Town:
Comparative Balance Sheets 264
Schedule of Revenues, Expenditures, and Changes in Fund Balance - Budget (GAAP Basis) and Actual 265
Ambulance:
Comparative Balance Sheets 266
Schedule of Revenues, Expenditures, and Changes in Fund Balance - Budget (GAAP Basis) and Actual 267
Fair Board:
Comparative Balance Sheets 268
Schedule of Revenues, Expenditures, and Changes in Fund Balance - Budget (GAAP Basis) and Actual 269
Vehicle Capital Projects:
Comparative Balance Sheets 270
Schedule of Revenues, Expenditures, and Changes in Fund Balance - Budget (GAAP Basis) and Actual 271
Road Equipment:
Comparative Balance Sheets 272
Schedule of Revenues, Expenditures, and Changes in Fund Balance - Budget (GAAP Basis) and Actual 273
Airport:
Comparative Balance Sheets 274
Schedule of Revenues, Expenditures, and Changes in Fund Balance - Budget (GAAP Basis) and Actual 275
Lincoln County Land Act:
Comparative Balance Sheets 276
Schedule of Revenues, Expenditures, and Changes in Fund Balance - Budget (GAAP Basis) and Actual 277
Lincoln County Water:
Comparative Balance Sheets 278
Schedule of Revenues, Expenditures, and Changes in Fund Balance - Budget (GAAP Basis) and Actual 279
Lincoln County Water District:
Comparative Balance Sheets 280
Schedule of Revenues, Expenditures, and Changes in Fund Balance - Budget (GAAP Basis) and Actual 281
Nonmajor Enterprise Funds:
Combining Statement of Net Position 282-283
Combining Schedule of Revenues, Expenses and Changes in Net Position 284-285
Combining Statement of Cash Flows 286-287

SUPPLEMENTARY INFORMATION (Continued):
COMBINING AND INDIVIDUAL FUND STATEMENTS AND SCHEDULES (Continued):

Pioche Public Utility Water:
Comparative Statement of Net Position 288
Schedule of Revenues, Expenses and Changes in Net Position 289
Comparative Statement of Cash Flows 290
Pioche Public Utility Sewer:
Comparative Statement of Net Position 291
Schedule of Revenues, Expenses and Changes in Net Position 292
Comparative Statement of Cash Flows 293
Building Department:
Comparative Statement of Net Position 294
Schedule of Revenues, Expenses and Changes in Net Position 295
Comparative Statement of Cash Flows 296

AGENCY FUNDS:
Combining Statement of Net Position 297-300
Combining Statement of Changes in Assets and Liabilities 301-305

Independent Auditor's Report on Internal Control Over Financial Reporting and on Compliance and Other Matters Based on an Audit of Financial Statements Performed in Accordance with *Government Auditing Standards* 306-307
Independent Auditor's Comments 308-309

ACCOMPANYING INFORMATION - FEDERAL AWARDS
Independent Auditor's Report on Compliance for Each Major Program and on Internal Control Over Compliance Required by the Uniform Guidance 310-311
Schedule of Expenditures of Federal Awards 312-314
Notes to Schedule of Expenditures of Federal Awards 315-316
Schedule of Findings and Questioned Costs 317-318
Summary Schedule of Prior Year Audit Findings and Questioned Costs 319

COUNTY OFFICERS at June 30, 2019:

Commissioners	Varlin Higbee, Chairman
	Jared Brackenbury, Vice Chairman
	Kevin Phillips, Member
	Bevan Lister, Member
	Vacant, Member
Clerk	Lisa Lloyd
Treasurer	Shawn Frehner
Auditor/Recorder	Amy Elmer
Assessor	Mark Holt
Sheriff	Kerry Lee
District Attorney	Dylan Frehner
Justice of the Peace	Mike Cowley
Justice of the Peace	Nola Holton

DANIEL C. McARTHUR, LTD.
Certified Public Accountant

Quail Park III • 501 So. Rancho Dr., Ste. E-30 • Las Vegas, NV 89106 • (702) 385-1899 • FAX (702) 385-9619

INDEPENDENT AUDITOR'S REPORT

Honorable Board of County Commissioners
Lincoln County, Nevada
Pioche, Nevada

Report on the Financial Statements

We have audited the accompanying financial statements of the governmental activities, the business-type activities, each major fund, and the aggregate remaining fund information of Lincoln County, Nevada (the County), as of and for the year ended June 30, 2019, and the related notes to the financial statements, which collectively comprise the County's basic financial statements as listed in the table of contents.

Management's Responsibility for the Financial Statements

Management is responsible for the preparation and fair presentation of these financial statements in accordance with accounting principles generally accepted in the United States of America; this includes the design, implementation, and maintenance of internal control relevant to the preparation and fair presentation of financial statements that are free from material misstatement, whether due to fraud or error.

Auditor's Responsibility

Our responsibility is to express opinions on these financial statements based on our audit. We conducted our audit in accordance with auditing standards generally accepted in the United States of America and the standards applicable to financial audits contained in *Government Auditing Standards*, issued by the Comptroller General of the United States. Those standards require that we plan and perform the audit to obtain reasonable assurance about whether the financial statements are free from material misstatement.

An audit involves performing procedures to obtain audit evidence about the amounts and disclosures in the financial statements. The procedures selected depend on the auditor's judgment, including the assessment of the risks of material misstatement of the financial statements, whether due to fraud or error. In making those risk assessments, the auditor considers internal control relevant to the entity's preparation and fair presentation of the financial statements in order to design audit procedures that are appropriate in the circumstances, but not for the purpose of expressing an opinion on the effectiveness of the entity's internal control. Accordingly, we express no such opinion. An audit also includes evaluating the appropriateness of accounting policies used and the reasonableness of significant accounting estimates made by management, as well as evaluating the overall presentation of the financial statements.

We believe that the audit evidence we have obtained is sufficient and appropriate to provide a basis for our audit opinions.

Opinions

In our opinion, the financial statements referred to above present fairly, in all material respects, the respective financial position of the governmental activities, the business-type activities, each major fund, and the aggregate remaining fund information of Lincoln County, Nevada, as of June 30, 2019, and the respective changes in financial position and, where applicable, cash flows thereof, for the year then ended in accordance with accounting principles generally accepted in the United States of America.

Other Matters

Required Supplementary Information

Accounting principles generally accepted in the United States of America require that the management's discussion and analysis on pages 5-13, budgetary comparisons information on pages 61-71, Reconciliation of the General Fund (Budgetary Basis) to the General Fund (GAAP Basis) on page 72, Schedule of Changes in the County's Total OPEB Liability and Related Ratios on page 73, Schedule of the County's Contributions to the Public Employees' Retirement System of the State of Nevada on Page 74, and Schedule of the County's Proportionate Share of the Net Pension Liability Public Employees' Retirement System of the State of Nevada on page 75 be presented to supplement the basic financial statements. Such information, although not a part of the basic financial statements, is required by the Governmental Accounting Standards Board, who considers it to be an essential part of financial reporting for placing the basic financial statements in an appropriate operational, economic, or historical context. We have applied certain limited procedures to the required supplementary information in accordance with auditing standards generally accepted in the United States of America, which consisted of inquiries of management about the methods of preparing the information and comparing the information for consistency with management's responses to our inquiries, the basic financial statements, and other knowledge we obtained during our audit of the basic financial statements. We do not express an opinion or provide any assurance on the information because the limited procedures do not provide us with sufficient evidence to express an opinion or provide any assurance.

Other Information

Our audit was conducted for the purpose of forming opinions on the financial statements that collectively comprise the County's basic financial statements. The combining and individual fund financial statements and schedules are presented for purposes of additional analysis and are not a required part of the basic financial statements.

The combining and individual fund financial statements and schedules are the responsibility of management and were derived from and relate directly to the underlying accounting and other records used to prepare the basic financial statements. Such information has been subjected to the auditing procedures applied in the audit of the basic financial statements and certain additional procedures, including comparing and reconciling such information directly to the underlying accounting and other records used to prepare the basic financial statements or to the basic financial statements themselves, and other additional procedures in accordance with auditing standards generally accepted in the United States of America. In our opinion, the combining and individual fund financial statements and schedules are fairly stated in all material respects in relation to the basic financial statements as a whole.

Comparative Prior Year Information

We also have previously audited, in accordance with auditing standards generally accepted in the United States of America, the County's basic financial statements for the year ended June 30, 2018, which are not presented with the accompanying financial statements and we expressed unmodified opinions on the respective financial statements of the governmental activities, the business-type activities, each major fund, and the aggregate remaining fund information. That audit was conducted for the purpose of forming opinions on the financial statements that collectively comprise the County's basic financial statements as a whole. The combining and individual fund financial statements and schedules, for the year ended June 30, 2018, are presented for purposes of additional analysis and are not a required part of the basic financial statements. Such information is the responsibility of management and was derived from and relates directly to the underlying accounting and other records used to prepare the 2018 basic financial statements. The information has been subjected to the auditing procedures applied in the audit of those basic financial statements and certain additional procedures, including comparing and reconciling such information directly to the underlying accounting and other records used to prepare the basic financial statements or to the basic financial statements themselves, and other additional procedures in accordance with auditing standards generally accepted in the United States of America. In our opinion, the 2018 combining and individual fund financial statements and schedules are fairly stated in all material respects in relation to the basic financial statements from which they have been derived.

Other Reporting Required by *Government Auditing Standards*

In accordance with *Government Auditing Standards*, we have also issued our report dated November 27, 2019 on our consideration of the County's internal control over financial reporting and on our tests of its compliance with certain provisions of laws, regulations, contracts, and grant agreements and other matters. The purpose of that report is solely to describe the scope of our testing of internal control over financial reporting and compliance and the results of that testing, and not to provide an opinion on the effectiveness in internal control over financial reporting or on compliance. That report is an integral part of an audit performed in accordance with *Government Auditing Standards* in considering the County's internal control over financial reporting and compliance.

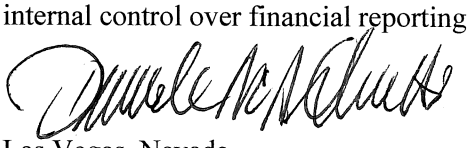

Las Vegas, Nevada
November 27, 2019

As management of Lincoln County, Nevada, we offer readers of Lincoln County, Nevada's financial statements this narrative overview and analysis of the financial activities of Lincoln County, Nevada, for the fiscal year end June 30, 2019. The Management's Discussion and Analysis ("MD&A") introduces the financial reports for Lincoln County, Nevada. The MD&A is designed to give the reader an easy-to-understand overview of the County's financial position and results of operations for the year. The MD&A is separated into Financial Highlights, an Overview of the Financial Statements, and a Government-Wide Financial Analysis.

Financial Highlights

The assets of the County exceeded its liabilities at the close of the 2019 fiscal year by $35,916,197 (net position). Total net position represents approximately $26,067,921 in capital assets, net of related debt, and $6,415,868 in assets restricted for debt services, capital projects, public works, and for other purposes. The remaining $3,432,408 represents unrestricted net position, which may be used to meet the County's ongoing obligations to its citizens and creditors.

The government-wide net position of the County increased during the fiscal year 2019 by $1,369,539, or 3.96%.

At the end of fiscal year 2019, the County's governmental funds reported combined fund balances of $20,175,109; an increase of $1,169,958, or 6.16%, when compared to the previous year.

The County's primary revenue sources for governmental activities were ad valorem (property) taxes of $3,138,259, fuel taxes of $1,843,255, charges for services of $1,817,359, consolidated taxes of $1,508,040, operating grants and contributions of $1,012,094, and federal in lieu taxes of $932,088. These revenue sources comprised 26.35%, 15.48%, 15.26%, 12.66%, 8.50%, and 7.83% respectively, or 86.08%, of total governmental activities revenues. Business-type activities revenue from charges for services was $3,596,448.

The County's total government-wide expenses were $14,305,990. The greatest expenses were in the General Government $3,496,455, Public Works $2,031,104, and Public Safety $1,899,672 functions. Business-type activities contributed $3,521,652 to total expenses.

Overview of the Financial Statements

This discussion and analysis is intended to serve as an introduction to the County's basic financial statements which consists of government-wide financial statements, fund financial statements, and accompanying notes. This report also contains required supplementary information in addition to the basic financial statements.

Government-Wide Financial Statements: The government-wide financial statements are designed to provide readers with a broad overview of the County's finances in a manner similar to a private-sector business.

The Statement of Net Position presents information on all of the County's assets and liabilities with the difference reported as net position. Increases or decreases in net position may serve as a useful indicator of whether the financial position of the County is improving or deteriorating.

Overview of the Financial Statements (Continued)

The Statement of Activities presents information showing how the County's net position changed during the most recent fiscal year. All changes in net position are reported as soon as the underlying event giving rise to the change occurs, regardless of the timing of related cash flows. Thus, revenues and expenses are reported in this statement for some items that will only result in cash flows in future fiscal periods (e.g., uncollected taxes and earned but unused vacation and sick leave).

The government-wide financial statements report two types of activities: governmental activities and business-type activities. The government-wide financial statements distinguish functions of the County that are principally supported by taxes and intergovernmental revenues (governmental activities) from other functions that are intended to recover all or a significant portion of their costs through user fees and charges (business-type activities). The governmental activities of the County include general government, public safety, public works, judicial, health, sanitation, welfare, community support, culture and recreation, and intergovernmental. The business-type activities include operations of its detention center, utilities, solid waste, and building department operations.

Fund Financial Statements: A fund is a grouping of related accounts used to maintain control over resources that have been segregated for specific activities or objectives. The County, like other state and local governments, uses fund accounting to ensure and demonstrate compliance with finance-related legal requirements. All of the funds of the County can be divided into three categories: governmental funds, proprietary funds, and fiduciary funds.

Governmental Funds: Governmental funds are used to account for essentially the same functions reported as governmental activities in the government-wide financial statements. However, unlike the government-wide financial statements, governmental fund financial statements focus on near-term inflows and outflows of spendable resources, as well as on balances of spendable resources available at the end of the fiscal year. Such information may be useful in evaluating the County's near-term financial requirements.

Because the focus of governmental funds is narrower than that of the government-wide financial statements, it is useful to compare the information presented for governmental funds with similar information presented for governmental activities in the government-wide financial statements. By doing so, readers may better understand the long-term impact of the County's near-term financing decisions. Both the governmental fund balance sheet and the governmental fund statement of revenues, expenditures, and changes in fund balances provide a reconciliation to facilitate this comparison between governmental funds and governmental activities.

The County maintains individual governmental funds. Information is presented separately in the governmental balance sheet and the governmental fund statement of revenues, expenditures, and changes in fund balances for the General Fund, Road Fund, Federal in Lieu Tax Fund, Lincoln County Water District Water Resources Fund, Lincoln County Land Act Special Use Fund, and County Grant Fund, each of which is considered to be a major fund. Data from the other governmental funds are combined into a single, aggregated presentation. Individual fund data for each of these nonmajor governmental funds is provided in the combining and individual fund statements and schedules.

The County adopts an annual appropriated budget for each of its governmental funds. A budgetary comparison statement is provided for each of the County's governmental funds to demonstrate compliance with the budget. The budgetary comparison statements for the major governmental funds are presented as required supplementary information; the budgetary comparison statements for all other governmental funds are included in the fund financial statements accompanying information.

Overview of the Financial Statements (Continued)

Proprietary Funds: The County maintains one type of proprietary fund, the Enterprise Fund. The Enterprise Fund is used to report the same functions presented as business-type activities in the government-wide financial statements. The County uses the Enterprise Funds to account for its utility activities, building department activities, solid waste operation, and operation of the detention center.

Proprietary funds provide the same type of information as the government-wide financial statements, only in more detail. The proprietary fund financial statements provide separate information for the utility funds, building department, solid waste, and detention center. The Detention Center, Pioche Public Utility Electric, and Solid Waste are considered to be major funds of the County.

Fiduciary Funds: Fiduciary funds are used to account for the resources held for the benefit of parties outside of the government; Fiduciary funds are not reported in the government wide financial statements because the resources of those funds are not available to support the County's own programs. The accounting used for fiduciary funds is much like that used for proprietary funds.

The County has one type of fiduciary fund, the Agency fund. The Agency Fund reports resources held by the County in a custodial capacity for individuals, private organizations, and other governments.

Notes to Financial Statements: The notes to the financial statements provide additional information that is essential to acquire a full understanding of the data provided in the government-wide and fund financial statements.

Other Information: In addition to the basic financial statements and accompanying notes, this report also presents certain required supplementary information concerning the County's progress in funding its obligation to provide other post-employment benefits to its employees; and schedules of budgetary comparisons for both the original and final budgets of the General Fund and the various other major County funds.

The combining statements and individual fund schedules referred to earlier in connection with the nonmajor governmental funds are presented immediately following the required supplementary information.

Government-Wide Financial Analysis

Net position of the County as of June 30, 2019, is summarized and analyzed below:

Net Position

	Governmental Activities		Business-type Activities		Total Primary Government	
	2019	**2018**	**2019**	**2018**	**2019**	**2018**
Assets:						
Current and other assets	$21,203,764	$20,627,984	$1,970,803	$1,698,776	$23,174,567	$22,326,760
Net capital assets	23,721,612	24,090,263	2,648,451	2,718,724	26,370,063	26,808,987
Total assets	44,925,376	44,718,247	4,619,254	4,417,500	49,544,630	49,135,747
Deferred outflows of resources:						
Deferred pension charge	1,238,859	1,195,795	521,732	519,015	1,760,591	1,714,810
Deferred OPEB	35,909	46,229	5,286	5,286	41,195	51,515
Total deferred outflows	1,274,768	1,242,024	527,018	524,301	1,801,786	1,766,325
Liabilities:						
Current liabilities	1,318,329	1,839,893	421,150	561,917	1,739,479	2,401,810
Long-term liabilities	8,143,723	8,350,554	4,371,952	4,377,584	12,515,675	12,728,138
Total liabilities	9,462,052	10,190,447	4,793,102	4,939,501	14,255,154	15,129,948
Deferred inflows of resources:						
Deferred pension charge	828,844	848,918	346,221	376,548	1,175,065	1,225,466
Net position:						
Invested in capital assets, net of related debt	23,607,589	23,984,900	2,460,332	2,507,612	26,067,921	26,492,512
Restricted	6,383,630	5,626,774	32,238	32,238	6,415,868	5,659,012
Unrestricted	5,918,029	5,309,232	(2,485,621)	(2,914,098)	3,432,408	2,395,134
Total net position	$35,909,248	$34,920,906	$ 6,949	$ (374,248)	$35,916,197	$34,546,658

As noted earlier, net assets may serve over time as a useful indicator of the County's financial position. Assets exceeded liabilities by $34,916,197 as of June 30, 2019, and by $34,546,658 as of June 30, 2018, resulting in a net increase of $1,369,539, or 3.96%.

A portion of the County's net assets, 72.58%, reflects its investment in capital assets (e.g., land, buildings, machinery and equipment, etc.), net of any related debt outstanding used to acquire those assets. The County uses these capital assets to provide services to citizens; consequently, these assets are not available for future spending. Although the County's investment in its capital assets is reported net of related debt, it should be noted that the resources needed to repay this debt must be provided from other sources, since the capital assets themselves cannot be used to liquidate the debt.

The County's restricted net assets of 17.86% represents resources that are subject to external restrictions on how they may be used.

The remaining portion of the County's net assets, 9.56%, is unrestricted and may be used to meet the County's ongoing obligations to citizens and creditors.

At June 30, 2019, the County had positive balances in all three categories of net assets.

Changes in net position of the County are summarized as follows:

	Governmental Activities		Business-type Activities		Total	
	2019	2018	2019	2018	2019	2018
Revenues:						
Program revenues:						
Charges for services	$ 1,817,359	$ 1,697,650	$ 3,596,448	$ 3,602,774	$ 5,413,807	$ 5,300,424
Operating grants and contributions	1,012,094	1,394,184	-	-	1,012,094	1,394,184
Capital grants and contributions	519,824	1,628,024	-	-	519,824	1,628,024
General revenues:						
Ad valorem taxes	3,138,259	2,987,607	-	-	3,138,259	2,987,607
Consolidated taxes	1,508,040	1,419,664	-	-	1,508,040	1,419,664
Fuel taxes	1,843,255	1,832,748	-	-	1,843,255	1,832,748
Room taxes	69,119	77,201	-	-	69,119	77,201
Gaming taxes	132,437	134,621	-	-	132,437	134,621
Marijuana fees	88,235	88,235	-	-	88,235	88,235
Tax penalties and costs	59,542	50,533	-	-	59,542	50,533
Federal in lieu taxes	932,088	1,804,715	-	-	932,088	1,804,715
Private car line	2	5,312	-	-	2	5,312
Fish and wildlife	3,794	3,294	-	-	3,794	3,294
Rent	128,997	154,654	-	-	128,997	154,654
National forest	15,140	21,230	-	-	15,140	21,230
Water sales	500	-	-	-	500	-
Investment income (loss)	593,951	(7,811)	7,860	112	601,811	(7,699)
Other	47,544	68,664	161,041	134,375	208,585	203,039
Total revenues	11,910,180	13,360,525	3,765,349	3,737,261	15,675,529	17,097,786
Expenses:						
General government	3,496,455	3,641,595	-	-	3,496,455	3,641,595
Public safety	1,899,672	2,004,934	-	-	1,899,672	2,004,934
Judicial	1,201,659	1,304,024	-	-	1,201,659	1,304,024
Public works	2,031,104	2,201,132	-	-	2,031,104	2,201,132
Health	318,285	287,596	-	-	318,285	287,596
Welfare	631,410	591,351	-	-	631,410	591,351
Culture and recreation	806,026	787,963	-	-	806,026	787,963
Community support	263,221	273,300	-	-	263,221	273,300
Intergovernmental	115,979	103,382	-	-	115,979	103,382
Other	6,971	9,654	3,521,652	3,639,520	3,528,623	3,649,174
Loss on disposal of assets	13,556	53,183	-	-	13,556	53,183
Total expenses	10,784,338	11,258,114	3,521,652	3,639,520	14,305,990	14,897,634
Change in net position before transfer	1,125,842	2,102,411	243,697	97,741	1,369,539	2,200,152
Transfers	(137,500)	(236,971)	137,500	236,971	-	-
Change in net position	988,342	1,865,440	381,197	334,712	1,369,539	2,200,152
Net position - beginning	34,920,906	33,055,466	(374,248)	(708,960)	34,546,658	33,200,826
Net position - ending	$ 35,909,248	$ 34,920,906	$ 6,949	$ (374,248)	$ 35,916,197	$ 35,400,978

Program revenues include charges for services, fines and forfeitures, certain licenses and permits, and both operating and capital grant contributions. General revenues consist of taxes, rent, investment income, and miscellaneous.

For general revenues, the largest of these revenues, ad valorem taxes, increased by $150,652, or 5.04%. The next largest revenue, fuel taxes, increased by $10,507, or 0.57%, due to increased economic activity in the local economy during the fiscal year 2019. The largest business-type activities revenue came from charges for services related to the utilities, detention center, solid waste, and building department. They decreased by $6,326, or 0.18%, due primarily to a decrease in inmate fees.

Financial Analysis of the County's Governmental Funds

The County uses fund accounting to ensure and demonstrate compliance with finance-related legal requirements.

Governmental Funds

As of the end of the current fiscal year, the County's governmental funds reported a combined ending fund balance of $20,175,109, an increase of 1,169,958, or 6.16%, from the prior year. Fund balance components have been classified as nonspendable, restricted, committed, assigned and/or unassigned based primarily on the extent to which the County is bound to observe constraints imposed on the use of the resources of each fund. Restricted fund balance is $6,383,630, or 31.64% of total. Spending of these resources is constrained by externally imposed (statutory, bond covenant, or grantors) limitations on their use. The largest restricted fund balances include $879,908 for multi-species conservation, $1,171,903 for capital projects, and $1,690,948 for public works.

Committed and assigned fund balances combined to represent 65.67% of total fund balance with spending constrained by either the Board of County Commissioners (for committed) or senior management (for assigned). Committed balances in the special revenue funds are primarily due to revenues directed by the Commission to those funds to support programs. The largest committed fund balances include $3,510,079 for the Lincoln County Water District and $4,060,853 for Lincoln County Land Act.

Major Funds

General Fund (Budgetary Basis): The General Fund is the chief operating fund of the County. At the end of the current fiscal year, the fund balance (budgetary basis) of the General Fund was $953,203, an increase of $180,064, or 23.29%. The General Fund revenues increased by $352,801, or 7.91%. Taxes increased by $107,611, or 5.05%. Charges for services decreased by $61,232, or 17.15%, due to decreased security contract and recorder fees. Intergovernmental revenues increased by $78,765, or 4.93%, due to increases in consolidated tax and grant revenues.

Expenditures decreased by $241,935, or 5.24%. General government expenditures decreased by $55,951, or 3.60% due to a decrease in county commissioner and auditor/recorder office costs. Public safety expenditures decreased by $26,128, or 1.52%, due to a decrease in benefits and service and supplies for the sheriff's office. Judicial expenditures decreased by $159,855, or 12.46% due to a decrease in district court and district attorney wages, benefits, and services and supplies.

Road Fund: The fund balance for the fund increased by $238,434 to $875,274, or 37.44%. The Road fund expenditures increased by $5,256, or 0.37%. This increase was due to services and supplies expenditures.

Federal in Lieu Tax Fund: The fund balance for the fund increased by $45,036 to $2,128,828, or 2.16%. The Federal in Lieu Tax Fund revenues decreased by $883,182, or 47.38%. This decrease was due to a decrease of grant monies. Expenditures decreased by $172,940, or 18.97%, due to general government expenditures.

Lincoln County Water District Water Resources Fund: The Lincoln County Water District Water Resources Fund balance increased by $107,795, or 3.94%, from the prior year. This was due to receiving a better interest rate on investments and no expenditures.

Lincoln County Land Act Special Use Fund: The Lincoln County Land Act Special Use Fund balance increased by $101,323, or 2.70% from the prior year. This was due to receiving a better interest rate on investments and no expenditures.

County Grant Fund: The County Grant Fund revenues decreased by $1,477,479, or 56.88%, and expenditures decreased by $1,548,154, or 57.85%. These decreases were due to receiving less grant monies in the current year.

Financial Analysis of the County's Enterprise Funds

Enterprise Funds provide the same type of information found in the government-wide financial statements, but in more detail. Unrestricted net position of the enterprise funds was a deficit of $2,485,621. Total net position for these funds increased by $381,197 from the prior year.

The **Detention Center Fund**, a major fund, had operating revenues decrease by $8,082, or 0.43, due to a decrease in inmate fees. Expenses decreased by $78,422, or 3.94% due to a decrease in salaries and benefits.

The **Pioche Public Utility Electricity Fund**, a major fund, had operating revenues increase by $101,278, or 14.61%, during the year. Operating expenses increased by $47,980, or 6.78%, due to an increase in salaries and benefits, services and supplies, and depreciation expenses.

The **Solid Waste Fund**, a major fund, had operating revenues decrease by $127,881, or 16.69%, during the year. Operating expenses decreased by $35,301, or 6.46%, due to a decrease in bad debt expense.

General Fund Budgetary Highlights

The original budget (2018-19 Final Budget) was approved May 21, 2018.

Original budget compared to final budget: During the year there was a need for an amendment to increase original estimated revenues and original budgeted appropriations. There was also a need to make an amendment to reallocate appropriations among departments when it became clearer which departments would actually be charged for certain expenses. Generally, the movement of the appropriations between departments was not significant.

Final budget compared to actual results: The most significant differences for the General Fund were as follows:

Overall the revenues received were more than budgeted by 3.63% or $168,304. Revenues received in excess of budgeted amounts were 4.43% for intergovernmental and 14.14% for licenses and permits. The shortfall in revenue sources was 22.68% for charges for services.

A review of actual expenditures compared to the appropriations in the final budget shows expenditures were $461,976 less than budgeted or 9.56%. Expenditures were under budget for all functions of the General Fund - general government 11.37%, public safety 5.84%, judicial 12.41%, and health 8.97%.

Actual fund balance (budgetary basis) of $953,203, was $501,342 higher than anticipated to begin the 2019-2020 year.

ECONOMIC FACTORS AND NEXT YEAR'S BUDGET AND RATES

The County approved the budget for the 2019-2020 year on May 20, 2019. The following factors were considered in the development of the budget.

- Assessed valuation for the County increased and tax rates remained unchanged. Therefore, property tax revenues will be higher.
- Population has remained stable and is projected to increase.

Capital Assets and Debt Administration

Capital Assets

The County's investment in capital assets, net of accumulated depreciation, at June 30, 2019, was $23,721,612 in governmental activities and $2,648,451 in business-type activities. A summary of changes in capital assets for the year ended June 30, 2019, follows:

Governmental Activities:

	Balance June 30, 2018	Additions	Transfers	Dispositions	Balance June 30, 2019
Capital assets not being depreciated:					
Construction in progress	$ 1,501,975	$ 466,374	$ (1,968,349)	$ -	$ -
Land	1,809,860	-	-	-	1,809,860
Total capital assets not being depreciated	3,311,835	466,374	(1,968,349)	-	1,809,860
Capital assets being depreciated:					
Building and improvements	21,769,683	-	1,968,349	-	23,738,032
Infrastructure	2,150,970	-	-	-	2,150,970
Equipment	9,842,512	540,494	-	(189,033)	10,193,973
Total capital assets being depreciated	33,763,165	540,494	1,968,349	(189,033)	36,082,975
Less accumulated depreciation for:					
Building and improvements	7,032,599	862,001	-	-	7,894,600
Infrastructure	330,801	43,019	-	-	373,820
Equipment	5,621,337	456,943	-	(175,477)	5,902,803
Total accumulated depreciation	12,984,737	1,361,963	-	(175,477)	14,171,223
Total capital assets being depreciated, net	20,778,428	(821,469)	1,968,349	(13,556)	21,911,752
Governmental activities assets, net	$ 24,090,263	$ (355,095)	$ -	$ (13,556)	$ 23,721,612

Business-type Activities:

	Balance June 30, 2018	Additions	Transfers	Dispositions	Balance June 30, 2019
Capital assets not being depreciated:					
Land	$ 214,000	$ -	$ -	$ -	$ 214,000
Capital assets being depreciated:					
Building and improvements	1,357,695	17,149	-	-	1,374,844
Utility system	1,410,352	24,912	-	-	1,435,264
Equipment	1,698,529	57,370	-	-	1,755,899
Total capital assets being depreciated	4,466,576	99,431	-	-	4,566,007
Less accumulated depreciation for:					
Building and improvements	383,412	44,174	-	-	427,586
Utility system	656,877	42,736	-	-	699,613
Equipment	921,563	82,794	-	-	1,004,357
Total accumulated depreciation	1,961,852	169,704	-	-	2,131,556
Total capital assets being depreciated, net	2,504,724	(70,273)	-	-	2,434,451
Business-type activities assets, net	$ 2,718,724	$ (70,273)	$ -	$ -	$ 2,648,451

Capital Assets (Continued)

Major capital asset events during the current fiscal year included the following:

- Construction completed for Airports and other improvements.
- Equipment for the sheriff, general government, and other culture and recreation equipment.

Debt Administration

Changes in Long-term Debt: During the year ended June 30, 2019, the following changes occurred in long-term debt:

Governmental activities:

	Balance June 30, 2018	Net Additions	Net Deletions	Balance June 30, 2019	Due within One Year
Compensated absences	$ 438,130	$ -	$ 16,062	$ 422,068	$ 257,460
Net pension liability	7,577,595	22,418	-	7,600,013	-
OPEB obligation payable	484,987	-	150,039	334,948	-
Note payable	74,798	-	50,641	24,157	24,157
Capital lease payable	29,966	133,245	77,146	86,065	41,911
Total	$ 8,605,476	$ 155,663	$ 293,888	$ 8,467,251	$ 323,528

Business-type activities:

	Balance June 30, 2018	Net Additions	Net Deletions	Balance June 30, 2019	Due within One Year
Compensated absences	$ 245,145	$ -	$ 18,029	$ 227,116	$ 141,720
Net pension liability	3,603,172	12,198	-	3,615,370	-
OPEB obligation payable	92,789	908	-	93,697	-
Landfill closure and postclosure costs	40,000	20,000	-	60,000	-
Bond payable	211,112	-	22,993	188,119	10,630
Total	$ 4,192,218	$ 33,106	$ 41,022	$ 4,184,302	$ 152,350

The County's debt decreased by $138,225 for governmental activities during the current fiscal year. The reductions were mainly from an increase in debt proceeds offset by a decrease in OPEB obligation payable and the payment of debt.

The County's debt decreased by $7,916 for business-type activities during the current fiscal year. The reason for the decrease was a reduction in estimated compensated absences and bond payments offset by increases in net pension liability, estimated OPEB obligation payable, and landfill closure costs.

Per Nevada Revised Statutes Chapter 244A.059, the debt limitation for the County is equal to 10 percent of the assessed valuation of property, excluding motor vehicles, for the current year. The debt limitation currently applicable at June 30, 2019, was $28,101,861.

Additional information on the County's long-term debt can be found in (**Note D6**).

REQUESTS FOR INFORMATION

This financial report is designed to provide its users with a general overview of Lincoln County, Nevada's finances and to demonstrate the County's accountability for the revenues it receives. Any comments, further questions, or requests for additional information should be addressed to:

County Administration - Lincoln County, Nevada
PO Box 218
Pioche, Nevada 89043

LINCOLN COUNTY, NEVADA
STATEMENT OF NET POSITION
June 30, 2019

	Primary Government		
	Governmental Activities	Business-type Activities	Total
Assets:			
Cash and cash equivalents	$ 19,644,129	$ 1,488,203	$ 21,132,332
Interest receivable	69,075	891	69,966
Taxes receivable	56,426	-	56,426
Due from other governments	1,034,134	-	1,034,134
Prepaid expense	40,000	-	40,000
Accounts receivable	-	388,353	388,353
Interfund receivable	360,000	-	360,000
Restricted assets- Cash	-	93,356	93,356
Capital assets net of accumulated depreciation	23,721,612	2,648,451	26,370,063
Total assets	44,925,376	4,619,254	49,544,630
Deferred outflows of resources:			
Deferred pension charge	1,238,859	521,732	1,760,591
Deferred OPEB	35,909	5,286	41,195
Total deferred outflows of resources	1,274,768	527,018	1,801,786
Liabilities:			
Accounts payable	419,968	72,082	492,050
Accrued payroll and benefits	307,952	167,286	475,238
Customer deposits	-	8,120	8,120
Unearned revenue	263,080	-	263,080
Interest payable	3,801	1,312	5,113
Current portion of liabilities due within one year:			
Accrued compensated absences	257,460	141,720	399,180
Interfund payable	-	20,000	20,000
Notes payable	24,157	-	24,157
Lease payable	41,911	-	41,911
Current portion of liabilities payable from restricted assets:			
Bond payable	-	10,630	10,630
Long-term liabilities due or payable after one year:			
Accrued compensated absences	164,608	85,396	250,004
Landfill closure and postclosure costs	-	60,000	60,000
Interfund payable	-	340,000	340,000
Net pension liability	7,600,013	3,615,370	11,215,383
OPEB liability	334,948	93,697	428,645
Bond payable	-	177,489	177,489
Lease payable	44,154	-	44,154
Total liabilities	9,462,052	4,793,102	14,255,154
Deferred inflows of resources:			
Deferred pension charge	828,844	346,221	1,175,065
Net position:			
Invested in capital assets, net of debt	23,607,589	2,460,332	26,067,921
Restricted	6,383,630	32,238	6,415,868
Unrestricted	5,918,029	(2,485,621)	3,432,408
Total net position	$ 35,909,248	$ 6,949	$ 35,916,197

The notes to the financial statements are an integral part of this statement.

LINCOLN COUNTY, NEVADA
STATEMENT OF ACTIVITIES
June 30, 2019

Functions/Programs	Expenses	Program Revenues: Charges for Services	Program Revenues: Operating Grants and Contributions	Program Revenues: Capital Grants and Contributions	Changes in Net Position: Governmental Activities	Changes in Net Position: Business-type Activities	Total
Primary governments:							
General government	$ (3,496,455)	$1,373,536	$ 346,484	$ 6,978	$ (1,769,457)	$ -	$ (1,769,457)
Public safety	(1,899,672)	134,396	256,376	-	(1,508,900)	-	(1,508,900)
Judicial	(1,201,659)	126,735	-	-	(1,074,924)	-	(1,074,924)
Public works	(2,031,104)	33,939	2,822	465,849	(1,528,494)	-	(1,528,494)
Health	(318,285)	120,597	-	-	(197,688)	-	(197,688)
Welfare	(631,410)	-	241,388	46,472	(343,550)	-	(343,550)
Culture and recreation	(806,026)	-	17,100	525	(788,401)	-	(788,401)
Community support	(263,221)	28,156	147,924	-	(87,141)	-	(87,141)
Intergovernmental	(115,979)	-	-	-	(115,979)	-	(115,979)
Interest on long-term debt	(6,971)	-	-	-	(6,971)	-	(6,971)
Total governmental activities	(10,770,782)	1,817,359	1,012,094	519,824	(7,421,505)	-	(7,421,505)
Business-type activities:							
Building Department	(76,859)	24,169	-	-	-	(52,690)	(52,690)
Detention Center	(1,914,300)	1,867,300	-	-	-	(47,000)	(47,000)
Landfill	(511,337)	638,124	-	-	-	126,787	126,787
Pioche Public Utility	(1,019,156)	1,066,855	-	-	-	47,699	47,699
Total business-type activities	(3,521,652)	3,596,448	-	-	-	74,796	74,796
Total primary governments	$(14,292,434)	$5,413,807	$ 1,012,094	$ 519,824	(7,421,505)	74,796	(7,346,709)
	General Revenues:						
	Property taxes				3,138,259	-	3,138,259
	Consolidated taxes				1,508,040	-	1,508,040
	Fuel tax				1,843,255	-	1,843,255
	Room tax				69,119	-	69,119
	Gaming tax				132,437	-	132,437
	Marijuana fees				88,235	-	88,235
	Tax penalties and costs				59,542	-	59,542
	Federal in-lieu tax				932,088	-	932,088
	Private car line				2	-	2
	Fish and wildlife				3,794	-	3,794
	Rent				128,997	-	128,997
	National forest				15,140	-	15,140
	Water sales				500	-	500
	Loss on disposal of assets				(13,556)	-	(13,556)
	Investment income (loss)				593,951	7,860	601,811
	Miscellaneous				47,544	-	47,544
	Capital fees				-	135,632	135,632
	Custom fees				-	25,409	25,409
	Operating transfers				(137,500)	137,500	-
	Total general revenues and transfers				8,409,847	306,401	8,716,248
	Change in net position				988,342	381,197	1,369,539
	Net position - beginning of year				34,920,906	(374,248)	34,546,658
	Net position - end of year				$ 35,909,248	$ 6,949	$ 35,916,197

The notes to the financial statements are an integral part of this statement

LINCOLN COUNTY, NEVADA
BALANCE SHEET
GOVERNMENTAL FUNDS
June 30, 2019

	Major Funds				
	General Fund	Road Fund	Federal in Lieu Tax Fund	Lincoln County Water District Water Resources	Lincoln County Land Act Special Use
ASSETS					
Pooled cash and investments	$ 1,654,218	$ 541,005	$ 2,149,537	$ 2,828,036	$ 3,671,992
Interest receivable	20,097	1,143	4,751	$ 13,174	8,055
Taxes receivable	33,425	-	-	-	-
Due from other governments	249,422	438,509	-	-	-
Prepaid expense	-	-	-	-	-
Interfund receivable	-	-	-	-	180,000
Total assets	$ 1,957,162	$ 980,657	$ 2,154,288	$ 2,841,210	$ 3,860,047
LIABILITIES					
Accounts payable	$ 88,273	$ 60,064	$ 25,460	$ -	$ -
Accrued payroll and benefits	192,900	45,319	-	-	-
Unearned revenues	-	-	-	-	-
Total liabilities	281,173	105,383	25,460	-	-
DEFERRED INFLOWS OF RESOURCES					
Unavailable revenue - property taxes	26,512	-	-	-	-
FUND BALANCE					
Nonspendable	-	-	-	-	-
Restricted for:					
Capital projects	-	-	-	-	-
Unincorporated towns	-	-	-	-	-
Multi-species conservation	-	-	-	-	-
Stabilization	133,488	-	-	-	-
Rachel Jones Cemetery	827	-	-	-	-
General government	356,424	-	-	-	-
Public safety	-	-	-	-	-
Judicial	-	-	-	-	-
Public works	-	875,274	-	-	-
Health	-	-	-	-	-
Welfare	-	-	-	-	-
Culture and recreation	-	-	-	-	-
Community support	-	-	-	-	-
Intergovernmental	-	-	-	-	-
Committed for:					
Land act	65,999	-	-	-	3,860,047
Water	64,695	-	-	-	-
Lincoln County Water District	-	-	-	2,841,210	-
General government	-	-	2,128,828	-	-
Health	-	-	-	-	-
Planning	34,921	-	-	-	-
Flood control	39,920	-	-	-	-
Assigned for:					
Subsequent year	451,861	-	-	-	-
Unassigned:	501,342	-	-	-	-
Total fund balance	1,649,477	875,274	2,128,828	2,841,210	3,860,047
Total liabilities, deferred inflows of resources, and fund balance	$ 1,957,162	$ 980,657	$ 2,154,288	$ 2,841,210	$ 3,860,047

The notes to the financial statements are an integral part of this statement.

County Grant	Other Governmental Funds	Totals
$ 46,967	$ 8,752,374	$ 19,644,129
114	21,741	69,075
-	23,001	56,426
257,043	89,160	1,034,134
-	40,000	40,000
-	180,000	360,000
$ 304,124	$ 9,106,276	$ 21,203,764
$ 56,857	$ 189,314	$ 419,968
14,643	55,090	307,952
168,479	94,601	263,080
239,979	339,005	991,000
-	11,143	37,655
-	40,000	40,000
-	1,171,903	1,171,903
-	280,019	280,019
-	879,908	879,908
-	-	133,488
-	-	827
-	230,811	587,235
-	59,838	59,838
-	289,301	289,301
-	815,674	1,690,948
-	496	496
-	814,730	814,730
-	244,626	244,626
-	228,857	228,857
-	1,454	1,454
-	134,807	4,060,853
-	2,746,544	2,811,239
-	668,869	3,510,079
64,145	124,101	2,317,074
-	23,668	23,668
-	-	34,921
-	-	39,920
-	-	451,861
-	522	501,864
64,145	8,756,128	20,175,109
$ 304,124	$ 9,106,276	$ 21,203,764

LINCOLN COUNTY, NEVADA
RECONCILIATION OF THE GOVERNMENTAL FUNDS BALANCE SHEET
TO THE STATEMENT OF NET POSITION
June 30, 2019

Total fund balance - governmental funds	**$**	**20,175,109**
Amounts reported for governmental activities in the Statement of Net Position are different because:		
Capital assets, net of the related depreciation, are not reported in the Governmental Funds financial statements because they are not current financial resources, but they are reported in the Statement of Net Position.		23,721,612
Other long-term assets which are not available to pay for current period expenditures and, therefore, are deferred in the funds.		37,655
Certain liabilities (such as bonds payable and capital leases payable) are not reported in the Governmental Funds financial statements because they are not due and payable, but they are presented as liabilities in the Statement of Net Position.		(536,091)
The County's other post-employment benefits liabilities as well as other post-employment benefits-related deferred outflows and deferred inflows of resources are recognized in the government-wide statements and include:		
Deferred outflows from other post-employment benefits.		35,909
Total other post-employment benefits liability.		(334,948)
The County's proportionate share of net pension assets and liabilities as well as pension-related deferred outflows and deferred inflows of resources are recognized in the government-wide statements and include:		
Deferred outflows from pension activity		1,238,859
Net pension liability		(7,600,013)
Deferred inflows from pension activity		(828,844)
Total net position - governmental activities	**$**	**35,909,248**

The notes to the financial statements are an integral part of this statement.

LINCOLN COUNTY, NEVADA
STATEMENT OF REVENUES, EXPENDITURES,
AND CHANGES IN FUND BALANCES
GOVERNMENTAL FUNDS
Year Ended June 30, 2019

	Major Funds			
	General Fund	Road Fund	Federal in Lieu Tax Fund	Lincoln County Water District Water Resources
Revenues:				
Taxes	$ 2,240,230	$ -	$ -	$ -
Licenses and permits	20,717	-	-	-
Intergovernmental	1,677,489	1,738,701	939,066	-
Charges for services	308,115	-	-	-
Fines and forfeitures	361,968	-	-	-
Miscellaneous	224,325	10,080	41,902	107,795
Total revenues	4,832,844	1,748,781	980,968	107,795
Expenditures:				
Current:				
General government	1,525,947	-	533,302	-
Public safety	1,697,754	-	52,533	-
Judicial	1,122,681	-	-	-
Public works	81,646	1,410,347	-	-
Health	52,387	-	-	-
Welfare	-	-	-	-
Culture and recreation	-	-	-	-
Community support	-	-	16,602	-
Intergovernmental	-	-	83,755	-
Capital projects	-	-	-	-
Debt service:				
Principal	-	-	50,641	-
Interest	-	-	1,935	-
Total expenditures	4,480,415	1,410,347	738,768	-
Excess (deficiency) of revenues over expenditures	352,429	338,434	242,200	107,795
Other financing sources (uses):				
Operating transfers in	75,000	-	-	-
Operating transfers out	(87,500)	(100,000)	(197,164)	-
Capital lease proceeds	-	-	-	-
Total other financing sources (uses)	(12,500)	(100,000)	(197,164)	-
Net change in fund balance	339,929	238,434	45,036	107,795
Fund balance:				
Beginning of year	1,309,548	636,840	2,083,792	2,733,415
End of year	$ 1,649,477	$ 875,274	$ 2,128,828	$ 2,841,210

The notes to the financial statements are an integral part of this statement.

Lincoln County Land Act Special Use	County Grant	**Other Governmental Funds**	Totals
$ -	$ -	$ 967,954	$ 3,208,184
-	-	3,960	24,677
-	1,119,155	574,719	6,049,130
-	-	1,119,708	1,427,823
-	-	44,819	406,787
101,323	1,003	307,957	794,385
101,323	1,120,158	3,019,117	11,910,986
-	340,665	1,155,338	3,555,252
-	190,166	9,569	1,950,022
-	-	61,694	1,184,375
-	468,671	95,383	2,056,047
-	-	218,516	270,903
-	111,335	564,610	675,945
-	17,292	335,923	353,215
-	-	229,551	246,153
-	-	32,224	115,979
-	-	197,326	197,326
-	-	77,146	127,787
-	-	1,834	3,769
-	1,128,129	2,979,114	10,736,773
101,323	(7,971)	40,003	1,174,213
-	8,974	333,334	417,308
-	-	(170,144)	(554,808)
-	-	133,245	133,245
-	8,974	296,435	(4,255)
101,323	1,003	336,438	1,169,958
3,758,724	63,142	8,419,690	19,005,151
$ 3,860,047	$ 64,145	$ 8,756,128	$ 20,175,109

LINCOLN COUNTY, NEVADA
RECONCILIATION OF THE STATEMENT OF REVENUES, EXPENDITURES AND CHANGES IN FUND BALANCES OF GOVERNMENTAL FUNDS TO THE STATEMENT OF ACTIVITIES
Year Ended June 30, 2019

Net Change in Fund Balance - Governmental Funds	**$**	**1,169,958**
Amounts reported for governmental activities in the Statement of Activities are different because:		
Capital outlays to purchase or build capital assets are reported in Governmental Funds financial statements as expenditures. However, for governmental activities those costs are shown in the Statement of Net Position and allocated over the estimated useful lives as annual depreciation expenses in the Statement of Activities.		(368,651)
Property taxes that are collected in the time to pay obligations of the current period are reported as revenue in the fund statements. However, amounts that related to prior periods that first become available in the current period should not be reported as revenue in the statement of activities.		(806)
The issuance of long-term debt (e.g., bonds, leases) provides current financial resources to governmental funds, while the repayment of the principal of long-term debt consumes the current financial resources of governmental funds. Neither transaction, however, has any effect on net position. Also, governmental funds report the effect of issuance costs, premiums, discounts, and other similar items when debt is first issued, whereas these amounts are deferred and amortized in the Statement of Activities. This amount is the net effect of these differences in the treatment of long-term debt and related items.		(5,458)
Generally, expenditures recognized in the fund financial statements are limited to only those that use current financial resources, but expenses are recognized in the statement of activities when incurred.		12,860
Net differences between other post-employment benefits contributions recognized in the fund statement of revenues, expenditures, and changes in fund balances and the Statement of Activities:		
Other post-employment benefits contributions made after measurement date (2019 contributions).		35,909
Net other post-employment benefits expense.		103,810
Net differences between pension system contributions recognized in the fund statement of revenues, expenditures, and changes in fund balances and the statement of activities:		
Pension contributions made after measurment date (2019 contributions).		446,071
Net pension expense.		(405,351)
Change in net position of governmental activities	**$**	**988,342**

The notes to the financial statements are an integral part of this statement.

LINCOLN COUNTY, NEVADA
STATEMENT OF NET POSITION
PROPRIETARY FUNDS
June 30, 2019

	Major Fund		
	Detention Center	Pioche Public Utility Electric	Solid Waste
ASSETS			
Current assets:			
Pooled cash and investments	$ 134,754	$ 383,369	$ 559,621
Accounts receivable	160,804	55,115	142,054
Interest receivable	-	268	133
Total current assets	295,558	438,752	701,808
Restricted assets:			
Cash	-	-	61,118
Capital assets:			
Land	-	2,000	200,000
Property, plant and equipment (net of depreciation)	831,505	194,434	388,088
Total capital assets	831,505	196,434	588,088
Total assets	1,127,063	635,186	1,351,014
DEFERRED OUTFLOWS OF RESOURCES			
Deferred pension charge	419,985	20,745	42,641
Deferred OPEB	-	1,762	-
Total deferred outflows of resources	419,985	22,507	42,641
LIABILITIES			
Current liabilities:			
Accounts payable	21,865	32,977	10,560
Accrued payroll and benefits	131,636	5,090	15,845
Customer deposits	-	8,030	-
Accrued compensated absences	111,415	7,180	8,445
Interfund payable	-	-	20,000
Accrued interest payable	-	-	-
Total current liabilities	264,916	53,277	54,850
Current liabilities payable from restricted assets:			
Revenue bond	-	-	-
Non-current liabilities:			
Accrued compensated absences	65,250	4,450	5,697
Landfill closure and postclosure costs	-	-	60,000
Interfund payable	-	-	340,000
Net pension liability	3,247,750	132,110	-
OPEB liability	-	31,232	-
Revenue bond	-	-	-
Total non-current liabilities	3,313,000	167,792	405,697
Total liabilities	3,577,916	221,069	460,547
DEFERRED INFLOWS OF RESOURCES			
Deferred pension charge	278,397	14,042	27,654
NET POSITION			
Invested in capital assets, net of related debt	831,505	196,434	588,088
Restricted for revenue bond debt service	-	-	-
Unrestricted	(3,140,770)	226,148	317,366
Total net position	$ (2,309,265)	$ 422,582	$ 905,454

The notes to the financial statements are an integral part of this statement.

Nonmajor Enterprise Funds	Total Enterprise Funds
$ 410,459	$ 1,488,203
30,380	388,353
490	891
441,329	1,877,447
32,238	93,356
12,000	214,000
1,020,424	2,434,451
1,032,424	2,648,451
1,505,991	4,619,254
38,361	521,732
3,524	5,286
41,885	527,018
6,680	72,082
14,715	167,286
90	8,120
14,680	141,720
-	20,000
1,312	1,312
37,477	410,520
10,630	10,630
9,999	85,396
-	60,000
-	340,000
235,510	3,615,370
62,465	93,697
177,489	177,489
485,463	4,371,952
533,570	4,793,102
26,128	346,221
844,305	2,460,332
32,238	32,238
111,635	(2,485,621)
$ 988,178	$ 6,949

LINCOLN COUNTY, NEVADA
STATEMENT OF REVENUES, EXPENSES, AND
CHANGES IN NET POSITION
PROPRIETARY FUNDS
For the Year Ended June 30, 2019

	Major Fund		
	Detention Center	Pioche Public Utility Electric	Solid Waste
Operating revenues:			
Charges for services	$ 1,867,300	$ 794,658	$ 638,124
Operating expenses:			
Salaries and wages	980,005	73,023	231,487
Employee benefits	508,390	35,605	82,873
Services and supplies	380,597	620,444	131,808
Closure and postclosure landfill costs	-	-	20,000
Depreciation	45,308	26,221	45,169
Total operating expenses	1,914,300	755,293	511,337
Operating income (loss)	(47,000)	39,365	126,787
Non-operating revenues (expenses):			
Investment income	-	2,360	1,174
Operating transfers in	97,500	-	-
Capital fees	-	66,361	-
Custom fees	-	14,538	-
Interest expense	-	-	-
Total non-operating revenues (expenses)	97,500	83,259	1,174
Changes in net position	50,500	122,624	127,961
Net position:			
Beginning of year	(2,359,765)	299,958	777,493
End of year	$ (2,309,265)	$ 422,582	$ 905,454

The notes to the financial statements are an integral part of this statement.

Nonmajor Enterprise Funds	Total Enterprise Funds
$ 296,366	$ 3,596,448
111,589	1,396,104
64,838	691,706
102,390	1,235,239
-	20,000
53,006	169,704
331,823	3,512,753
(35,457)	83,695
4,326	7,860
40,000	137,500
69,271	135,632
10,871	25,409
(8,899)	(8,899)
115,569	297,502
80,112	381,197
908,066	(374,248)
$ 988,178	$ 6,949

LINCOLN COUNTY, NEVADA
STATEMENT OF CASH FLOWS
PROPRIETARY FUNDS
For the Year Ended June 30, 2019

	Major Fund		
	Detention Center	Pioche Public Utility Electric	Solid Waste
Cash flows from operating activities:			
Cash received from customers	$ 2,025,172	$ 790,707	$ 640,760
Cash paid for services and supplies	(384,273)	(631,175)	(138,645)
Cash paid for salaries and benefits	(1,514,110)	(108,899)	(321,206)
Net cash provided (used) by operating activities	126,789	50,633	180,909
Cash flows from noncapital financing activities:			
Due to other funds	(89,535)	-	-
Operating transfers in/out	97,500	-	-
Net cash provided (used) by noncapital financing activities	7,965	-	-
Cash flows from capital and related financing activities:			
Purchases of capital assets	-	(46,370)	(28,149)
Capital fees	-	66,361	-
Custom fees	-	14,538	-
Debt retirement	-	-	(20,000)
Interest paid	-	-	-
Net cash provided (used) by capital and related financing activities	-	34,529	(48,149)
Cash flows from investing activities:			
Investment income	-	2,257	1,113
Net change in cash and cash equivalents	134,754	87,419	133,873
Cash:			
Beginning of year	-	295,950	486,866
End of year	$ 134,754	$ 383,369	$ 620,739
Reconciliation of operating income (loss) to net cash provided (used) by operating activities:			
Operating income (loss)	$ (47,000)	$ 39,365	$ 126,787
Adjustments to reconcile operating income (loss) to net cash provided (used) by operating activities:			
Depreciation expense	45,308	26,221	45,169
(Increase) decrease in accounts receivable	157,872	(5,371)	2,636
Increase (decrease) in accounts payable	(3,676)	(10,731)	(6,837)
Increase (decrease) in accrued payroll and benefits	7,825	(400)	435
Increase (decrease) in compensated absences	(16,089)	269	(4,911)
Increase (decrease) in land fill costs	-	-	20,000
Increase (decrease) in net pension liability	11,411	499	(472)
Increase (decrease) in net pension expense	(28,862)	(941)	(1,898)
Increase (decrease) in OPEB liability	-	302	-
Increase (decrease) in customer deposits	-	1,420	-
Total adjustments	173,789	11,268	54,122
Net cash provided (used) by operating activities	$ 126,789	$ 50,633	$ 180,909

The notes to the financial statements are an integral part of this statement.

Nonmajor Enterprise Funds	Total Enterprise Funds
$ 299,299	$ 3,755,938
(118,443)	(1,272,536)
(172,939)	(2,117,154)
7,917	366,248
-	(89,535)
40,000	137,500
40,000	47,965
(24,912)	(99,431)
69,271	135,632
10,871	25,409
(22,993)	(42,993)
(8,923)	(8,923)
23,314	9,694
4,132	7,502
75,363	431,409
367,334	1,150,150
$ 442,697	$ 1,581,559
$ (35,457)	$ 83,695
53,006	169,704
4,603	159,740
(16,053)	(37,297)
763	8,623
2,702	(18,029)
-	20,000
760	12,198
(1,343)	(33,044)
606	908
(1,670)	(250)
43,374	282,553
$ 7,917	$ 366,248

LINCOLN COUNTY, NEVADA
FIDUCIARY FUNDS
STATEMENT OF NET POSITION
June 30, 2019

	Investment Trust Fund	Agency
ASSETS		
Pooled cash and investments	$ 3,790,702	$ 1,243,099
Interest receivable	-	10,199
Taxes receivable	-	58,988
Due from other governments	-	48,483
Total assets	$ 3,790,702	$ 1,360,769
LIABILITIES		
Amount held for others	$ -	$ 1,314,135
Unavailable revenue - taxes	-	46,634
Total liabilities	-	1,360,769
NET POSITION		
Held in trust for pool participants	$ 3,790,702	$ -

The notes to the financial statements are an integral part of this statement.

LINCOLN COUNTY, NEVADA
FIDUCIARY FUNDS
STATEMENT OF CHANGES IN FIDUCIARY NET POSITION
June 30, 2019

	Investment Trust Fund
Additions:	
Investment earnings	$ 76,124
Net change in fair value of investments	22,994
Capital share transactions	-
Change in net position	99,118
Net position:	
Beginning of year	3,691,584
End of year	$ 3,790,702

The notes to the financial statements are an integral part of this statement.

NOTE A. SUMMARY OF SIGNIFICANT ACCOUNTING POLICIES

The County financial statements are prepared in accordance with generally accepted accounting principles (GAAP). The Governmental Accounting Standards Board (GASB) is responsible for establishing GAAP for state and local governments through its pronouncements (Statements and Interpretations).

1. Reporting Entity

Lincoln County, Nevada, is governed by an elected five member board. As required by generally accepted accounting principles, these financial statements present Lincoln County, Nevada (the primary government), and its component units. Blended component units, although legally separate entities are, in substance, part of the County's operations. Thus, blended component units are appropriately presented as funds' of the primary government.

2. Blended Component Units

Component units are legally separate organizations for which the County is financially accountable. Lincoln County Water District, Alamo Town, Panaca Town, and Pioche Town are all component units that are part of the County's reporting entity because the County is financially accountable for these entities. Financial accountability is determined primarily by the fact that as the governing body, the County's Board of Commissioners can impose its will on significant aspects of the operations of these entities. These entities are presented as blended component units since the operations of these entities are considered part of County operations.

3. Description of Government-Wide Financial Statements

The government-wide financial statements (i.e., the statement of net position and the statement of activities) report information on all of the nonfiduciary activities of the County and its component units. All fiduciary activities are reported only in the fund financial statements. *Governmental activities,* which normally are supported by taxes, intergovernmental revenues, and other nonexchange transactions, are reported separately from *business-type activities*, which rely to a significant extent on fees and charges to external customers for support.

4. Basis of Presentation - Government-wide Financial Statements

While separate government-wide and fund financial statements are presented, they are interrelated. The governmental activities column incorporates data from governmental funds, while business-type activities incorporate data from the County's enterprise funds. Separate financial statements are provided for governmental funds, proprietary funds (enterprise funds), and fiduciary funds, even though the fiduciary funds are excluded from the government-wide financial statements. As a general rule, the effect of interfund activity has been eliminated from the government-wide financial statements.

The Statement of Net Position presents the consolidated financial position of the County at year-end, in separate columns, for both governmental and business-type activities.

The Statement of Activities demonstrates the degree to which the direct expenses of a given function or programs are offset by program revenues. Direct expenses are those that are specifically associated with a program or service and are, therefore, clearly identifiable to a particular function. Amounts reported as program revenues include 1) charges to customers or applicants who purchase, use, or directly benefit from goods, services, or privileges provided by a given function or segment and 2) grants and contributions (including special assessments) that are restricted to meeting the operational or capital requirements of a particular function or segment. Taxes and other revenues properly not included among program revenues are reported instead as general revenues. This statement provides a net cost or net revenue of specific programs and functions within the County. Those functions with a net cost are generally dependent on general-purpose tax revenues, such as property tax, to remain operational.

NOTE A. SUMMARY OF SIGNIFICANT ACCOUNTING POLICIES (Continued)

5. Basis of Presentation - Fund Financial Statements

The fund financial statements provide information about the County's funds, including its fiduciary funds and blended component units. Separate statements for each fund category – governmental, proprietary (enterprise), and fiduciary – are presented. The emphasis of fund financial statements is on major governmental and enterprise funds, each displayed in a separate column. All remaining governmental and enterprise funds are aggregated and reported as nonmajor funds. Major individual governmental and enterprise funds are reported as separate columns in the fund financial statements.

The County reports the following major governmental funds:

General Fund - The General Fund is the County's primary operating fund. It accounts for all financial resources of the general County, except those accounted for in another fund.

Road Fund - The Road Fund is used to account for gas tax revenues allocated for the construction, repair and maintenance of County roads.

Federal in Lieu Tax Fund - The Federal in Lieu Tax Fund is used to account for taxes received in lieu of property taxes for property owned in the County by the Federal Government.

Lincoln County Water District Water Resources Fund - The Lincoln County Water District Water Resources Fund is used to account for general activities of the District, a blended component unit of the government.

Lincoln County Land Act Special Use Fund - The Lincoln County Land Act Special Use Fund is used to account for land sale monies to be spent per ordinances.

County Grant Fund - The County Grant Fund is used to account for monies received to be spent on a specified purpose.

The County reports the following major enterprise fund:

Detention Center Fund - The Detention Center fund is used to account for the activities of the Lincoln County Detention Center, providing detention services for local governments within Nevada.

Pioche Public Utility Electric Fund - The Pioche Public Utility Electric fund is used to account for the charges for providing electric service in Pioche, Nevada.

Solid Waste – The Solid Waste fund is used to account for solid waste disposal throughout the County and land fill operations.

Additionally, the County reports the following fiduciary fund:

Investment Trust – The investment trust fund is an external investment pool operated by the Lincoln County Treasurer. Participants include Caliente City, Lincoln County School District, Range, Panaca Fire Protection District, Pahranagat Fire District, Coyote Springs GID, Pioche Fire District, Southeastern Lincoln County Habitat Conservation Plan GID, and the Lincoln County Fire District.

Agency Funds – The Agency Fund is used to account for assets held by the County in an agency capacity for others and cannot be used to support the government's own programs.

During the course of operations, the County has activity between funds for various purposes. Any residual balances outstanding at year end are reported as due from/to other funds and advances to/from other funds. While these balances are reported in fund financial statements, certain eliminations are made in the preparation of the government-wide financial statements. Balances between the funds included in the governmental activities are eliminated so that only the net amount is included as internal balances in the governmental activities column. Similarly, balances between the funds included in business-type activities (i.e. enterprise funds) are eliminated so that only the net amount is included as internal balances in the business-type activities column.

NOTE A. SUMMARY OF SIGNIFICANT ACCOUNTING POLICIES (Continued)

5. Basis of Presentation - Fund Financial Statements (Continued)

Further, certain activity occurs during the year involving transfers of resources between funds. In fund financial statements these amounts are reported as transfers in/out. While reported in fund financial statements, certain eliminations are made in the preparation of government-wide financial statements. Transfers between the funds included in governmental activities are eliminated so that only the net amount is included as transfers in the governmental activities column. Similarly, balances between the funds included in business-type activities are eliminated so that only the net amount is included as transfers in the business-type activities column.

6. Measurement Focus and Basis of Accounting

The accounting and financial reporting treatment is determined by the applicable measurement focus and basis of accounting. Measurement focus indicates the type of resources being measured such as current financial resources or economic resources. The basis of accounting indicates the timing of events for recognition in the financial statements.

The government-wide financial statements are reported using the economic resources measurement focus and the accrual basis of accounting, as are the proprietary fund and fiduciary fund financial statements. Revenues are recorded when earned and expenses are recorded when a liability is incurred, regardless of the timing of related cash flows. Property taxes are recognized as revenues in the year for which they are levied. Grants and similar items are recognized as revenue as soon as all eligibility requirements imposed by the provider have been met.

The governmental fund financial statements are reported using the current financial resources measurement focus and the modified accrual basis of accounting. Revenues are recognized as soon as they are both measurable and available. Gross receipts and sales taxes are considered “measurable” when in the hands of intermediary collecting governments and are then recognized as revenue. The government considers revenues to be “available” if they are collected within 60 days of the end of the current fiscal period. Anticipated refunds of taxes are recorded as liabilities and reductions of revenue when they are measurable and the payment seems certain. In general, expenditures are recorded when liabilities are incurred. The exception to this rule is that principal and interest on debt service, as well as liabilities related to compensated absences and claims and judgments, are recorded when payment is due. General capital asset acquisitions are reported as expenditures in governmental funds. Issuance of long-term debt and acquisitions under capital leases are reported as other financing sources.

The major revenue sources of the County include consolidated taxes (including sales tax), fuel taxes, intergovernmental revenue, and property taxes. Property taxes, sales taxes, licenses, and interest associated with the current fiscal period are all considered to be susceptible to accrual and so have been recognized as revenues of the current fiscal period. Expenditure-driven grants are recognized as revenue when the qualifying expenditures have been incurred and all other eligibility requirements have been met, and the amount is received during the period or within the availability period for this revenue source (within 60 days of year-end). All other revenue items are considered to be measurable and available only when cash is received by the County.

The proprietary funds are reported using the economic resources measurement focus and the accrual basis of accounting. The agency fund has no measurement focus but utilizes the accrual basis of accounting for reporting its assets and liabilities. Proprietary funds distinguish operating revenues and expenses from non-operating items. Operating revenues and expenses generally result from providing services and producing and delivering goods in connection with a proprietary fund’s principal ongoing operations. The principal operating revenues of the Pioche Public Utility funds are customer charges. Operating revenues for the Building fund come from charges for services for building inspections and permits. The Detention Center receives revenue for housing prisoners of other governments. Expenses are those required to provide the service. The Solid Waste fund is used to account for solid waste disposal throughout the County and landfill operations. All revenues and expenses not meeting this definition are reported as non-operating revenues and expenses.

NOTE A. SUMMARY OF SIGNIFICANT ACCOUNTING POLICIES (Continued)

7. Budgetary Basis of Accounting

Annual budgets are adopted on a basis consistent with generally accepted accounting principles for governmental funds.

a. The statutes provide for the following timetable in adoption of budgets:

(i) Before April 15, the County submits to the Nevada State Department of Taxation a tentative budget for the upcoming fiscal year. The tentative budget includes proposed expenditures and the means to finance them.

(ii) A public hearing must be held by the County Commissioners no sooner than the third Monday in May and no later than the last day in May. Notice of the public hearing must be published once in the local newspaper not more than 14 nor less than 7 days before the hearing.

(iii) On or before June 1, the County Commissioners must adopt a final budget.

b. NRS 354.598005 (1) - provides that the County Commissioners may augment the budget at any time by a majority vote of the Commissioners providing the Commission publish notice of its intention to act in a newspaper of general circulation in the County at least three days before the date set for adoption of the resolution.

c. Nevada Revised Statute 354.598005 (5) allows appropriations to be transferred between functions, funds or contingency accounts if such a transfer does not increase the total appropriation for any fiscal year and is not in conflict with other statutory provisions. The County Auditor may transfer appropriations within any function. The County Auditor may also transfer appropriations between functions or programs within a fund, if the County Commissioners are advised of the action at the next regular meeting; and the action is recorded in the official minutes of the meeting. The County Commissioners may authorize the transfer of appropriations between funds or from the contingency account if the County Commissioners announce the transfer of appropriations at a regularly scheduled meeting and sets forth the exact amounts to be transferred and the accounts, functions, programs and funds affected. The County Commissioners must also set forth its reasons for the transfer; and the action must be recorded in the official minutes of the meeting.

d. Statutory regulations require budget control to be exercised at the function level within the funds.

e. The following funds were augmented during the year: Senior Nutrition, County Grants, and Resource Development Funds had automatic budget augmentations for grant revenue. General Fund, Airport, Room Tax, Alamo Clinic, Lincoln County Housing Authority, Genetic Marker Testing, Detention Center, and Pioche Public Utility – Electric Funds were augmented during the year for higher than anticipated revenues. Detention Center Fund was augmented for capital lease proceeds.

f. Generally, budgets for all funds are adopted in accordance with generally accepted accounting principles. Budgeted amounts reflected in the accompanying financial statements recognize amendments made during the year.

g. All appropriations lapse at the end of the fiscal year.

NOTE A. SUMMARY OF SIGNIFICANT ACCOUNTING POLICIES (Continued)

8. Assets, Liabilities, Deferred Outflows/Inflows of Resources, and Net Position/Fund Balance

a. Cash and Cash Equivalents

The County's cash and cash equivalents are considered to be cash on hand, demand deposits, and short term investments with original maturities of three months or less from the date of acquisition.

Cash includes cash deposited in interest-bearing accounts at banks and cash in the custody of fiscal agents of the County.

b. Investments

Investments are stated at fair value on the Balance Sheet. Fair value is the amount at which a financial instrument could be exchanged in a current transaction between willing parties other than in a forced or liquidation sale. Changes in the fair value of County investments are part of investment income which is included in revenue from local sources on the Statement of Activities and the Statement of Revenues, Expenditures, and Changes in Fund Balances of governmental funds. (**See Note D1**)

Nevada Revised Statutes authorize the County to invest in:

1. Obligations of the U.S. Treasury and U.S. Agencies in which the maturity dates do not exceed more than 10 years from the date of purchase.

2. Negotiable certificates of deposit issued by commercial banks or insured savings and loan associations (those over $250,000 must be fully collateralized).

3. Negotiable notes or short-term negotiable bonds issued by local governments within Nevada.

4. Eligible bankers' acceptances that do not exceed 270 days maturity and do not exceed 20 percent of the portfolio.

5. Commercial paper with a rating of A-1 or P-1 that does not exceed 240 days maturity and does not exceed 20 percent of the portfolio.

6. The State of Nevada's Local Government Investment Pool.

7. Repurchase agreements that are collateralized at 102 percent of the repurchase price and do not exceed 90 days maturity. Securities used for collateral must meet the criteria listed above.

8. Money market mutual funds which are rated as "AAA" or its equivalent and invest only in securities issued by the Federal Government, U.S. Agencies, or repurchase agreements fully collateralized by such securities.

c. Property Tax

Taxes on real property are levied on July 1st of each year and are due on the third Monday in July. They can be paid in quarterly installments in August, October, January, and March. In the event of nonpayment, the County Treasurer is authorized to hold the property for two years, subject to redemption upon payment of taxes, penalties, and costs, together with interest at a rate of 10 percent per year from the date the taxes were due until paid. If delinquent taxes are not paid within the two year redemption period, the County Treasurer obtains a deed to the property free of all encumbrances. Upon receipt of a deed, the County Treasurer may sell the property to satisfy the tax lien.

NOTE A. SUMMARY OF SIGNIFICANT ACCOUNTING POLICIES (Continued)

8. Assets, Liabilities, Deferred Outflows/Inflows of Resources, and Net Position/Fund Balance (Continued)

c. Property Tax (Continued)

Article X, Section 2 of the Constitution of the State of Nevada limits the total taxes levied by all overlapping governmental units within the boundaries of any County (i.e., the County, the County School District, the State and any other City, Town, or Special District) to an amount not to exceed $5 per $100 of assessed valuation of the property being taxed. The Nevada Legislature enacted provisions whereby the combined overlapping tax rate was limited to $3.64 per $100 of assessed valuation.

d. Inventories and Prepaid Items

Inventories are valued at cost using the first-in/first-out (FIFO) method. The cost of such inventories is recorded as expenditures/expenses when consumed rather than when purchased.

Certain payments to vendors reflect costs applicable to future accounting periods and are recorded as prepaid items in both the government-wide and fund financial statements.

e. Restricted Assets

Certain cash assets of the Enterprise Funds are from revenue for specific use by the Enterprise Funds and are classified as restricted assets because their use is restricted by agreement. **(See Note D5)**

f. Capital Assets

Capital assets, which include property, plant and equipment, and infrastructure assets (e.g. roads, bridges, sidewalks, and similar items), are reported in the applicable governmental or business-type activities columns in the government-wide financial statements. Capital assets are defined by the County as assets with an initial individual cost of more than $500 and an estimated useful life in excess of one year.

If purchased or constructed, capital assets are recorded at historical cost or estimated historical cost and updated for additions and retirements during the year. Donated capital assets are valued at their estimated value as of the date of donation. The costs of normal maintenance and repairs that do not add to the value of the asset or materially extend the life of the asset are not capitalized.

Land and construction in progress are not depreciated. The other property, plant and equipment of the primary government are depreciated using the straight line method over the following estimated useful lives:

Capital Assets	Years
Vehicles	10
Equipment	5-20
Buildings and Improvements	20-50
Infrastructure	25-50

The County is required to report and depreciate new infrastructure assets. Infrastructure assets include roads, bridges, underground pipe (other than related to utilities), traffic signals, etc. Neither their historical cost nor related depreciation has historically been reported in the financial statements. The County is required to capitalize and report its major general infrastructure assets acquired in fiscal years ending after June 30, 1980. In addition, infrastructure assets acquired before June 30, 1980, that received significant reconstruction must be capitalized.

NOTE A. SUMMARY OF SIGNIFICANT ACCOUNTING POLICIES (Continued)

8. Assets, Liabilities, Deferred Outflows/Inflows of Resources, and Net Position/Fund Balance (Continued)

g. Deferred Outflows/Inflows of Resources

In addition to assets, the statement of financial position will sometimes report a separate section for deferred outflows of resources. This separate financial statement element, deferred outflows of resources, represents consumption of net position that applies to a future period(s) and so will not be recognized as an outflow of resources (expense/expenditure) until then. Deferred outflows include the County's pension related contributions subsequent to the measurement date but before the end of the fiscal year and changes in proportion of the District's contributions to the County's proportionate contributions.

In addition to liabilities, the statement of financial position will sometimes report a separate section for deferred inflows of resources. This separate financial statement element, deferred inflows of resources, represents an acquisition of net position that applies to a future period(s) and so will not be recognized as an inflow of resources (revenue) until that time. The County has only one type of item, which arises only under a modified accrual basis of accounting, which qualifies for reporting in this category. Accordingly, the item, unavailable revenue, is reported only in the governmental funds balance sheet. The governmental funds report unavailable revenues from one source, property taxes. This amount is deferred and recognized as an inflow of resources in the period that the amounts become available.

Deferred inflows of resources represent an acquisition of net positon that applies to a future period and will not be recognized as an inflow of resources (revenue) until that time. The difference between projected and actual experience and investment earnings are related to the deferred inflows of pensions and the calculation of net pension liability reported on the statement of net position.

For purposes of measuring the net pension liability, deferred outflows of resources and deferred inflows of resources related to pensions, and pension expense, information about the fiduciary net position of the Public Employees' Retirement System of Nevada (PERS) and additions to/deductions from PERS's fiduciary net position have been determined on the same basis as they are reported by PERS. For this purpose, benefit payments are recognized when due and payable in accordance with the benefit terms. Investments are reported at fair value.

h. Governmental Fund Balances:

In the governmental fund financial statements, fund balances are classified as follows:

(i.) **Nonspendable –** Amounts that cannot be spent either because they are in a nonspendable form or because they are legally or contractually required to be maintained intact, such as inventories and prepaids.

(ii.) **Restricted –** Amounts that can be spent only for a specific purpose because of the state or federal laws, or externally imposed conditions by grantors or creditors.

(iii.) **Committed –**These amounts can only be used for specific purposes as set forth by the County Commissioners. The Commissioners must take formal action (vote approval by the majority), in order to establish an ending fund balance commitment for any specific purpose. Formal Commission action is also required to modify or rescind an established commitment. To be reported as committed, amounts cannot be used for any other purpose unless the Commission takes the same highest level action to remove or change the constraint.

NOTE A. SUMMARY OF SIGNIFICANT ACCOUNTING POLICIES (Continued)

8. Assets, Liabilities, Deferred Outflows/Inflows of Resources, and Net Position/Fund Balance (Continued)

h. Governmental Fund Balances (Continued):

(iv.) Assigned – Assignments are neither restrictions nor commitments and represent the County's intent to use funds for a specific purpose. These assignments, however, are not legally binding and are meant to reflect intended future use of the County's ending fund balance. Intent can be expressed by the County Commissioners or by the County Auditor.

(v.) Unassigned – All amounts not included in other classifications.

i. Fund Balance Flow Assumption

Sometimes the County will fund outlays for a particular purpose from both restricted and unrestricted resources (the total of committed, assigned, and unassigned fund balance.) When fund balance resources are available for a specific purpose in more than one classification, it is the County's policy to use the most restrictive funds first in the following order: restricted, committed, assigned, and unassigned as they are needed.

j. Net Position Policies

In the government-wide statements, net position on the Statement of Net Position includes the following:

(i) Invested in Capital Assets, net of Related Debt

This is the component of net position that reports the difference between capital assets less both the accumulated depreciation and the outstanding balance of debt, excluding unexpended proceeds, that is directly attributable to the acquisition, construction, or improvement of those assets.

(ii) Restricted Assets

This is the component of net position that reports the constraints placed on the use of assets by either external parties and/or enabling legislation. Currently, the County restricts assets as follow:

a) NRS 354.598155 Special Ad Valorem Capital Projects
b) NRS 354.6113 Capital Projects Fund
c) NRS 365.190 Road Improvements
d) NRS 354.6115 Budget Stabilization
e) NRS 269 Unincorporated Towns

(iii) Unrestricted

This is the component of net position that is the difference between the assets and liabilities not reported in Invested in Capital Assets, Net of Related Debt and Restricted Assets.

k. Net Position Flow Assumption

Sometimes the County will fund outlays for a particular purpose from both restricted (e.g., restricted bond or grant proceeds) and unrestricted resources. In order to calculate the amounts to report as restricted – net position and unrestricted – net position in the government-wide and proprietary fund financial statements, a flow assumption must be made about the order in which the resources are considered to be applied. It is the County's policy to consider restricted – net position to have been depleted before unrestricted – net position is applied.

NOTE A. SUMMARY OF SIGNIFICANT ACCOUNTING POLICIES (Continued)

8. Assets, Liabilities, Deferred Outflows/Inflows of Resources, and Net Position/Fund Balance (Continued)

l. Comparative Data/Reclassifications

Comparative total data for the prior year has been presented in selected sections of the accompanying financial statements in order to provide an understanding of the changes in the County's financial position and operations. Also, certain amounts presented in the prior year data have been reclassified in order to be consistent with the current year's presentation.

m. Use of Estimates

The preparation of financial statements in conformity with generally accepted accounting principles requires management to make estimates and assumptions that affect the reported amounts of assets and liabilities and disclosures of contingent assets and liabilities at the date of the financial statements and the reported amounts of revenues and expenses during the period. Actual results could differ from those estimates.

n. Budgetary Stabilization

It is the County's policy to determine the balance or reserve as reasonable and necessary to carry out the purposes of the stabilization fund on a yearly basis. NRS 354.6115 authorizes the creation of a fund to stabilize operations of local governments and mitigate effects of natural disaster. The intent of this policy is to include a portion of the General Fund budgeted ending fund balance that will be restricted to stabilization pursuant to NRS 354.6115. Fund balance that is restricted to stabilization can be used after approval by the board of County Commissioners when total actual revenue falls short of the total anticipated revenue in the General Fund for the fiscal year in which the County uses the money.

9. Revenues and Expenditures/Expenses

a. Compensated Absences

Vested or accumulated vacation and sick leave that is expected to be liquidated with expendable available financial resources is reported as an expenditure and a fund liability of the governmental fund that will pay it. Amounts of vested or accumulated vacation leave that are not expected to be liquidated with expendable available financial resources are reported in the government-wide financial statements. No expenditure is reported for these amounts in the fund financial statements. (**See Note D6**) Vacation leave and sick leave included in accrued liabilities and recorded as expenditures in governmental fund types is the amount normally liquidated from "available spendable resources."

In proprietary funds, compensated absences are recorded when the liabilities are incurred. In governmental funds, the current portion is recorded as payroll expenditure. The estimated long-term liability for compensated absences is accounted for in the government-wide financial statements.

NOTE A. SUMMARY OF SIGNIFICANT ACCOUNTING POLICIES (Continued)

9. Revenues and Expenditures/Expenses (Continued)

b. Long-term Obligations

In the government-wide financial statements and proprietary fund types in the fund financial statements, long-term debt and other long-term obligations are reported as liabilities in the applicable governmental activities, business-type activities, or proprietary fund type Statement of Net Position. Bond premiums and discounts are deferred and amortized over the life of the bonds using the straight-line method. Bonds payable are reported net of the applicable bond premium or discount. Bond issuance costs are expensed when incurred.

In the fund financial statements, governmental fund types recognize bond premiums and discounts, as well as bond issuance costs, during the current period. The face amount of debt issued is reported as other financing sources. Premiums received on debt issuances are reported as other financing sources while discounts on debt issuances are reported as other financing uses. Issuance costs, whether or not withheld from the actual debt proceeds received, are reported as debt service expenditures.

c. Proprietary Funds Operating and Nonoperating Revenues and Expenses

Proprietary funds distinguish operating revenues and expenses from nonoperating items. Operating revenues and expenses generally result from providing services and producing and delivering goods in connection with a proprietary fund's principal ongoing operations. The principal operating revenues of the enterprise funds are charges to customers for sales and services. Operating expenses for enterprise funds include the cost of sales and services, administrative expenses, and depreciation on capital assets. All revenues and expenses not meeting this definition are reported as nonoperating revenues and expenses.

NOTE B. RECONCILIATION OF GOVERNMENT-WIDE AND FUND FINANCIAL STATEMENTS

1. Explanation of certain differences between the governmental funds Balance Sheet and the government-wide Statement of Net Position

The governmental fund balance sheet includes reconciliation between fund balances - total governmental funds and net position - governmental activities as reported in the government-wide statement of net position. One element of the reconciliation explains that "certain liabilities (such as bonds payable and capital leases payable) are not reported in the Governmental funds financial statements because they are not due and payable, but they are presented as liabilities in the statement of net position." The details of this difference are as follows:

Interest payable	$ (3,801)
Capital lease payable	(86,065)
Notes payable	(24,157)
Compensated absences	(422,068)
Net adjustment to reduce fund balance - total governmental funds to arrive at net position - governmental activities	$ (536,091)

NOTE B. RECONCILIATION OF GOVERNMENT-WIDE AND FUND FINANCIAL STATEMENTS (Continued)

2. Explanation of certain differences between the governmental funds Statement of Revenues, Expenditures, and Changes in Fund Balances and the government-wide Statement of Activities

The governmental fund Statement of Revenues, Expenditures, and Changes in Fund Balances includes a reconciliation between net changes in fund balances - total governmental funds and changes in net position of governmental activities as reported in the government-wide Statement of Activities. One element of that reconciliation explains that "Capital outlays to purchase or build capital assets are reported in Governmental Funds financial statements as expenditures. However, for governmental activities those costs are shown in the statement of net position and allocated over their estimated useful lives as annual depreciation expense in the statement of activities." The details of this difference are as follows:

Capital outlay	$ 1,006,868
Book value of disposed assets	(13,556)
Depreciation expense	(1,361,963)
Net adjustment to increase net changes in fund balances - total governmental funds to arrive at changes in net position of governmental activities	$ (368,651)

Another element of that reconciliation states that, "The issuance of long-term debt (i.e., bonds, leases) provides current financial resources to governmental funds, while the repayment of the principal of long-term debt consumes the current financial resources of governmental funds. Neither transaction, however, has any effect on Net Position. Also, governmental funds report the effect of issuance costs, premiums, discounts, and other similar items when debt is first issued, whereas these amounts are deferred and amortized in the statement of activities. This amount is the net effect of these differences in the treatment of long-term debt and related items." The details of this difference are as follows:

Capital lease proceeds	$ (133,245)
General obligation debt principal payments	$ 127,787
Net adjustment to increase net change in fund balances – governmental funds to arrive at change in net position of governmental activities	$ (5,458)

Another element of that reconciliation states that "Generally, expenditures recognized in the fund financial statements are limited to only those that use current financial resources, but expenses are recognized in the statement of activities when incurred." The details of this difference are as follows:

Accrued interest	$ (3,202)
Compensated absences	16,062
Net adjustment to increase net change in fund balances – governmental funds to arrive at change in net position of governmental activities	$ 12,860

NOTE C. STEWARDSHIP, COMPLIANCE, AND ACCOUNTABILITY

1. Compliance and Accountability

The County conformed to significant statutory requirements regarding financial administrations except as follows:

Per NRS 354.626, the County is required to report expenditures that exceeded budgeted appropriations at the function level for the General Fund, Special Revenue Funds, and Capital Project Funds. Enterprise funds may not exceed budget appropriations at the fund level. For the year ending June 30, 2019, the County had the following expenditures over appropriations that are required to be reported.

Federal in Lieu Tax Fund – Intergovernmental function	$ 3,755

The Federal in Lieu Fund intergovernmental function expenditures in excess of appropriations is not a violation. The over expenditure is related to intergovernmental payments to the Nevada Division of Parole and Probation and the Nevada Division of Health. The County is required to make four quarterly payments to the Divisions. A fifth invoice from each Division was received after year to settle up the County's share of costs for the year causing the over expenditure.

2. Deficit Fund Balance/Net Position

Legal Aid Services	$ 193
Detention Center Enterprise Fund	$ 2,309,265
Building Department Enterprise Fund	$ 89,571

The deficit net position of the Detention Center and Building Department Enterprise funds are due to the individual fund's proportionate share of the net pension liability of the Public Employees' Retirement System of the State of Nevada. See **Note D-12** of the financial statement. The Legal Aid Services deficit is due to an unanticipated invoice in the amount of $770 for legal services recorded as accounts payable that was received too late in the budget year to allow the County to take any corrective action to remedy the deficit before year end. The deficit will be corrected with revenues of the following year.

NOTE D. DETAILED NOTES ON ALL FUNDS

1. Pooled Cash and Investments

The County maintains a cash and investment pool that is available for use by all funds under the custody of the County Treasurer. At June 30, 2019, this pool is displayed by the statement of net position and major and other governmental funds on the governmental funds balance sheet as "Pooled Cash and Investments."

A reconciliation of cash and investments as shown in the Statement of Net Position is as follows:

Cash in the hands of officers	$ 135,867
Carrying amount of deposits	5,649,702
Fair value of investments	20,473,920
Total	$26,259,489

NOTE D. DETAILED NOTES ON ALL FUNDS (Continued)

1. Pooled Cash and Investments (Continued)

A reconciliation of cash and investments as for the County is as follows:

Government-wide pooled cash and investments	$21,132,332
Restricted cash	93,356
Total primary government	$21,225,688
Investment trust fund	3,790,702
Agency fund cash	1,243,099
Total reporting entity	$26,259,489

Except for financial reporting purposes, the cash balances of $5,033,801 in the Agency Funds are not normally considered part of the County's pooled cash and investments. These amounts represent cash held in an agency capacity by the County and cannot be used in the County's normal operations.

The cash and investment pool is available for use by all funds of the County. Cash and investments under the custody of the County Treasurer are invested as a pool. The County Treasurer may invest the money of the investment pool in investments which have been authorized as investments by Nevada Revised Statutes. (**See Note A8b**)

Investment income is apportioned to the funds within the pool monthly based on the average balance invested for the month.

State statutes authorize the County to invest in obligations of the U.S. Treasury, commercial paper, corporate bonds, repurchase agreements, and the State Treasurer's Investment Pool.

Cash and investment are subject to the following risks:

Interest Rate Risk: Interest rate risk is the risk of possible reduction in the value of a security, especially a bond, resulting from the rise in interest rates. Nevada Revised Statutes limits bankers' acceptances to 180 days of maturities, repurchase agreements to 90 days, U.S. Treasuries and Agencies to less than 10 years, and commercial paper to 270 days maturity. The approximate weighted average maturity of investments in the Lincoln County Treasurer's investment pool was 2.12 years.

As of June 30, 2019, monies held in the Lincoln County Treasurer's cash and investment pool are categorized as follows:

		Investment Maturities (In Years)		
Investment Type	Fair Value	Less than 1	1-5	6-10
U.S. Government and Agencies:				
U.S. Treasury note	$ 5,882,200	$ 3,101,970	$ 2,780,230	$ 0
U.S. Agency mortgage-backed	4,298,574	2,744,171	1,554,403	0
Corporate assets	2,176,688	249,328	1,927,360	
Money market funds	632,306	632,306	0	0
Negotiable certificates of deposit	7,484,152	1,374,211	6,109,941	0
Total Investments	$20,473,920	$ 8,101,986	$ 12,371,934	$ 0

Governmental Accounting Standards require fair value reporting of all investments. The fair value of the County's investments was determined by market quotes.

NOTE D. DETAILED NOTES ON ALL FUNDS (Continued)

1. Pooled Cash and Investments (Continued)

Credit Risk: Credit risk is the risk that an issuer or other counterparty to an investment will not fulfill its obligation and is a function of the credit quality ratings of its investments. The Nevada Revised Statutes limits investments instruments by their credit risk **(Note A8a)**. The State of Nevada Local Government Investment Pool is an unrated external investment pool.

As of June 30, 2019, monies held in the Lincoln County Treasurer's cash and investment pool are categorized as follows:

		Quality Ratings by Moody's				
Investment Type	Fair Value	Aaa	A2	A3	Baa	N/A
U.S. Government and Agencies:						
U.S. Treasury note	$ 5,882,200	$ 5,882,200	$ 0	$ 0	$ 0	$ 0
U.S. Agency mortgage-backed	4,298,574	4,298,574	0	0	0	0
Corporate assets	2,176,688	0	486,954	1,440,406	249,328	0
Money market funds	632,306	0	0	0	0	632,306
Negotiable certificates of deposit	7,484,152	0	0	0	0	7,484,152
Total Investments	$20,473,920	$10,180,774	$ 486,954	$ 1,440,406	$249,328	$8,116,458

Custodial Credit Risk: Custodial credit risk is the risk that in the event of a bank or brokerage failure, the County's deposits may not be returned. The County's bank deposits are generally covered by FDIC insurance and are collateralized by the Office of the State Treasurer/Nevada Collateral Pool. At year-end, the County's carrying amount of deposits was $5,649,702 and the bank balance was $5,794,683. Of the bank balance, $504,800 was covered by federal depository insurance. Of the remaining balance, $5,289,883 was collateralized with securities held by the Nevada Pooled Collateral Program.

Concentrations of Credit Risk: Concentration of credit risk is defined as the risk of loss attributed to the magnitude of a government's investment in a single issuer. Investments with a single issuer within the Lincoln County Treasurer Cash and investment pool that represent five percent or more of total investments as of June 30, 2019, are as follows:

Federal Home Loan Banks (FHLB)	6.73%
U.S. Treasury Note	29.65%

Fair Value: The County implemented GASB Statement No. 72, Fair Value Measurement and Application, in 2015 to categorize its fair value measurements within the fair value hierarchy established by generally accepted accounting principles. The hierarchy is based on the valuation inputs used to measure the fair value of the asset. Level 1 inputs are quoted prices in active markets for identical assets; Level 2 inputs are significant other observable inputs; Level 3 inputs are significant unobservable inputs.

The County has the following recurring fair value measurements as of June 30, 2019:

Investment Type	Fair Value	Level 1	Level 2	N/A
U.S. Government and Agencies:				
U.S. Treasury note	$ 5,882,200	$ 5,882,200	$ 0	$ 0
U.S. Agency mortgage-backed	4,298,574	0	4,298,574	0
Corporate assets	2,176,688	0	2,176,688	0
Money market mutual fund	632,306	0	0	632,306
Negotiable certificates of deposit	7,484,152	0	0	7,484,152
Total Investments	$20,473,920	$ 5,882,200	$ 6,475,262	$ 8,116,458

NOTE D. DETAILED NOTES ON ALL FUNDS (Continued)

1. Pooled Cash and Investments (Continued)

External Investment Pool: The County administers an external investment pool combining the County funds with involuntary investments from Caliente City, Lincoln County School District, Range, Panaca Fire Protection District, Pahranagat Fire District, Coyote Springs GID, Pioche Fire District, Southeastern Lincoln County Habitat Conservation Plan GID, and the Lincoln County Fire District. The Board of County Commissioners has the overall responsibility of investment of funds including the external investment pool in accordance with NRS 355.175. The Lincoln County Treasurer is delegated investment responsibilities. The fair value of investments is determined monthly as statements from the various investment companies are received. Each participant's share is equal to their original investment plus or minus monthly allocations of interest income and realized and unrealized gains and losses. The County has not provided nor obtained any legally binding guarantees to support the value of the shares.

A summary of investments held in external investment pools at June 30, 2019, is as follows:

Investment Type	Fair Value	Principal Amount	Interest Rate
U.S. Government and Agencies:			
U.S. Treasury notes	$ 3,744,901	$ 3,760,000	Variable
U.S. Agency mortgage-backed	2,234,093	2,240,000	Variable
Corporate assets	2,176,688	2,156,000	Variable
Money market funds	622,265	622,265	Variable
Negotiable certificates of deposit	6,344,482	6,335,000	Variable
Total Investments	$15,122,429	$ 15,113,266	

External Investment Pool Condensed Financial Statement
Statement of Net Position
June 30, 2019

Assets:	
Investments in securities	
U.S. Treasury notes	$ 3,744,901
U.S. Agency mortgage-backed	2,234,093
Corporate assets	2,176,688
Money market funds	622,265
Negotiable certificates of deposit	6,344,482
Total investments held in external investment pools	$ 15,122,429
Net position held in trust for pool participants	
Net position consists of	
Internal participants	$ 11,331,727
External participants	3,790,702
Total net position held in trust for pool participants (Participant's units' outstanding, $1.00/par)	$ 15,122,429

Statement of Changes in Net Position
For the Year Ended June 30, 2019

Additions:	
Investment earnings	$ 273,235
Net change in fair value of investments	82,531
Change in net position resulting from operations	355,766
Net capital share transactions	125,000
Change in net position	480,766
Net position, beginning of year	14,641,663
Net position, end of year	$ 15,122,429

NOTE D. DETAILED NOTES ON ALL FUNDS (Continued)

2. Receivables

Below is the detail of receivables for each major fund and the nonmajor funds, in the aggregate, including the applicable allowances for uncollectible accounts:

Receivables as of year-end, net of the applicable allowances for uncollectible accounts, are as follows:

			Due From Other Governments						
Receivables:	Taxes	Interest	Grants	Gaming Taxes	Consolidated Taxes	Fuel Taxes	Other	Accounts Receivable	Total
General	$33,425	$20,097	$ -	$3,282	$ 240,872	$ -	$ 5,268	$ -	$ 302,944
Road	-	1,143	-	-	-	438,509	-	-	439,652
Federal In Lieu	-	4,751	-	-	-	-	-	-	4,751
Water Resources	-	13,174	-	-	-	-	-	-	13,174
Land Act Use	-	8,055	-	-	-	-	-	-	8,055
County Grant	-	114	257,043	-	-	-	-	-	257,157
Other Governmental Funds	23,001	21,741	11,620	-	21,352	32,941	23,247	-	133,902
Enterprise Funds	-	891	-	-	-	-	-	388,353	389,244
Total receivables	$56,426	$69,966	$268,663	$3,282	$ 262,224	$471,450	$28,515	$ 388,353	$ 1,548,879

3. Capital Assets

Capital assets activity for the year ended June 30, 2019, was as follows:

Governmental Activities:

	Balance June 30, 2018	Additions	Transfers	Dispositions	Balance June 30, 2019
Capital assets not being depreciated:					
Construction in progress	$ 1,501,975	$ 466,374	$ (1,968,349)	$ -	$ -
Land	1,809,860	-	-	-	1,809,860
Total capital assets not being depreciated	3,311,835	466,374	(1,968,349)	-	1,809,860
Capital assets being depreciated:					
Building and improvements	21,769,683	-	1,968,349	-	23,738,032
Infrastructure	2,150,970	-	-	-	2,150,970
Equipment	9,842,512	540,494	-	(189,033)	10,193,973
Total capital assets being depreciated	33,763,165	540,494	1,968,349	(189,033)	36,082,975
Less accumulated depreciation for:					
Building and improvements	7,032,599	862,001	-	-	7,894,600
Infrastructure	330,801	43,019	-	-	373,820
Equipment	5,621,337	456,943	-	(175,477)	5,902,803
Total accumulated depreciation	12,984,737	1,361,963	-	(175,477)	14,171,223
Total capital assets being depreciated, net	20,778,428	(821,469)	1,968,349	(13,556)	21,911,752
Governmental activities assets, net	$ 24,090,263	$ (355,095)	$ -	$ (13,556)	$ 23,721,612

NOTE D. DETAILED NOTES ON ALL FUNDS (Continued)

3. Capital Assets

Business-type Activities:

	Balance June 30, 2018	Additions	Transfers	Dispositions	Balance June 30, 2019
Capital assets not being depreciated:					
Land	$ 214,000	$ -	$ -	$ -	$ 214,000
Capital assets being depreciated:					
Building and improvements	1,357,695	17,149	-	-	1,374,844
Utility system	1,410,352	24,912	-	-	1,435,264
Equipment	1,698,529	57,370	-	-	1,755,899
Total capital assets being depreciated	4,466,576	99,431	-	-	4,566,007
Less accumulated depreciation for:					
Building and improvements	383,412	44,174	-	-	427,586
Utility system	656,877	42,736	-	-	699,613
Equipment	921,563	82,794	-	-	1,004,357
Total accumulated depreciation	1,961,852	169,704	-	-	2,131,556
Total capital assets being depreciated, net	2,504,724	(70,273)	-	-	2,434,451
Business-type activities assets, net	$ 2,718,724	$ (70,273)	$ -	$ -	$ 2,648,451

Depreciation expense was charged to functions/programs of the primary government as follows:

Governmental activities:	
General government	$ 172,410
Public safety	124,273
Judicial	32,210
Public works	485,678
Health and sanitation	50,137
Welfare	22,807
Community support	20,020
Culture and recreation	454,428
	$ 1,361,963
Business activities:	
Building	$ 475
Water	29,152
Sewer	23,379
Electric	26,221
Solid waste	45,169
Detention center	45,308
	$ 169,704

NOTE D. DETAILED NOTES ON ALL FUNDS (Continued)

4. Accrued Liabilities

Accrued liabilities reported by governmental funds at June 30, 2019, were as follows:

Fund	Accrued Payroll and Benefits	Customer Deposits	Interest Payable
General	$ 192,900	$ -	$ -
Road	45,319	-	-
County Grants	14,643	-	-
Other Governmental Funds	55,090	-	-
Major Enterprise Funds	152,571	8,030	-
Nonmajor Enterprise Funds	14,715	90	1,312
Total	$ 475,238	$ 8,120	$ 1,312

5. Restricted Assets

The balances of the County's restricted asset accounts are as follows

Cash – Pioche Public Utility - Water	$ 20,748
Cash – Pioche Public Utility - Sewer	11,490
Cash – Solid Waste	61,118
Total restricted cash	$ 93,356

6. Long-term Debt

Governmental Type Activities:

Note Payable

a. The County borrowed money for the purchase of BLM land. The original principal of the note was $440,000. Payments are due in monthly installments of $4,383 through November, 2019, with interest at 5%.

Year Ending June 30,	Remaining Payments	Interest	Principal
2020	$ 24,428	$ 271	$ 24,157

Capital Leases

a. During the year ending June 30, 2017, the County entered into a lease agreement for 3 public safety vehicles totaling $90,000. The leases have been classified as capital leases according to generally accepted accounting principles. The leases contain non-funding clauses whereby the leases are terminated without penalty should the County fail in a budget year to appropriate money for the payment. The vehicles have a ten-year estimated useful life. This year, $9,000 was included in depreciation expense. This lease agreement qualifies as a capital lease for accounting purposes and, therefore, has been recorded at the present value of future minimum lease payments as of the inception date. The lease was paid in full during the year.

NOTE D. DETAILED NOTES ON ALL FUNDS (Continued)

6. Long-term Debt

Governmental Type Activities: (Continued)

Capital Leases

b. During the year ending June 30, 2019, the County entered into a lease agreement for 4 public safety vehicles totaling $133,245. The leases have been classified as capital leases according to generally accepted accounting principles. The leases contain non-funding clauses whereby the leases are terminated without penalty should the County fail in a budget year to appropriate money for the payment. The vehicles have a ten-year estimated useful life. This year, $0 was included in depreciation expense. This lease agreement qualifies as a capital lease for accounting purposes and, therefore, has been recorded at the present value of future minimum lease payments as of the inception date. The future minimum lease obligations and the net present value of these minimum lease payments as of June 30, 2019, were as follows:

Year Ending June 30,	Remaining Payments	Amount Representing Principal	Amount Representing Interests
2020	$ 47,180	$ 41,911	$ 5,269
2021	47,180	44,154	3,026
	$ 94,360	$ 86,065	$ 8,295

Business-Type Activities:

Revenue Bonds The County issues revenue bonds to provide funds for the acquisition and construction of utility capital assets. Revenue bonds have been issued for the business-type activities. Revenue bonds are an obligation of the enterprise utility funds for which the capital assets were acquired or constructed. Revenue bonds outstanding at June 30, 2019, are as follows:

a. $210,000, 2007 Pioche Town Sewer bond is payable to the U.S. Department of Agriculture-Rural Development. The bond is payable in semi-annual payments of $5,584 including interest. The interest rate is 4.375%. The bond agreement requires the County to establish and fund monthly a debt service reserve fund equal to 10% of the semi-annual payment each month over the life of the loan until they accumulate one annual installment. This reserve fund can be used for emergency maintenance and repairs, and debt repayment should the need arise. The required reserve as of June 30, 2019, is $11,490. The balance in the reserve account was $11,490 as of June 30, 2019 **(See Note D-5)**. The outstanding balance of bonds payable at June 30, 2019, was $183,937.

Annual debt service requirements to maturity for the revenue bond are as follows:

Year Ending June 30,	Principal	Interest
2020	$ 3,294	$ 7,874
2021	3,440	7,728
2022	3,592	7,576
2023	3,751	7,417
2024	3,915	7,253
2025-2029	22,349	33,491
2030-2034	27,737	28,103
2035-2039	34,438	21,402
2040-2044	42,757	13,083
2045-2048	35,510	3,148
	$ 180,783	$ 137,075

NOTE D. DETAILED NOTES ON ALL FUNDS (Continued)

6. Long-term Debt (Continued)

b. $350,000, 1980 Pioche Town Water bond due in monthly installments of $1,729, including interest at 5%, through 2020. The Water bond is payable to the Farmers Home Administration. The bond agreement requires the County to establish and maintain reserves sufficient to insure that loan installments will be paid on time and to pay for emergency maintenance of the facilities. The required reserve as of June 30, 2019, is $20,748. The balance in the reserve account was $20,748 as of June 30, 2019. The outstanding balance of bonds at June 30, 2019, was $7,336.

Annual debt service requirements to maturity for the Revenue Bonds are as follows:

Year Ending June 30,	Principal	Interest
2020	$ 7,336	$ 200

Changes in Long-term Debt: During the year ended June 30, 2019, the following changes occurred in long-term debt:

Governmental activities:

	Balance June 30, 2018	Net Additions	Net Deletions	Balance June 30, 2019	Due within One Year
Compensated absences	$ 438,130	$ -	$ 16,062	$ 422,068	$ 257,460
Net pension liability	7,577,595	22,418	-	7,600,013	-
OPEB obligation payable	484,987	-	150,039	334,948	-
Note payable	74,798	-	50,641	24,157	24,157
Capital lease payable	29,966	133,245	77,146	86,065	41,911
Total	$ 8,605,476	$ 155,663	$ 293,888	$ 8,467,251	$ 323,528

Business-type activities:

	Balance June 30, 2018	Net Additions	Net Deletions	Balance June 30, 2019	Due within One Year
Compensated absences	$ 245,145	$ -	$ 18,029	$ 227,116	$ 141,720
Net pension liability	3,603,172	12,198	-	3,615,370	-
OPEB obligation payable	92,789	908	-	93,697	-
Landfill closure and postclosure costs	40,000	20,000	-	60,000	-
Bond payable	211,112	-	22,993	188,119	10,630
Total	$ 4,192,218	$ 33,106	$ 41,022	$ 4,184,302	$ 152,350

The compensated absence liability will be liquidated primarily by the General Fund. The note payable will be paid by the Federal in Lieu Fund. The capital leases will be paid by the Vehicle Capital Projects Fund.

Per Nevada Revised Statute Chapter 244A.059, the debt limitation for the County is equal to 10 percent of the assessed valuation of property, excluding motor vehicles for the current year. The debt limitation currently applicable at June 30, 2019, was $28,101,861.

NOTE D. DETAILED NOTES ON ALL FUNDS (Continued)

7. Interfund Transfers

Interfund operating transfers are made from one fund to another fund to support expenditures in accordance with the authority established for the individual funds. Transfers between fund types during the year ended June 30, 2019, were:

	Total	Transfer Out				
	Transfers In	General	Road	Federal In Lieu	Nonmajor Special Revenue	Nonmajor Capital Projects
General Fund	$ 75,000	$ -	$ -	$ 75,000	$ -	$ -
County Grant Fund	8,974	-	-	8,974	-	-
Nonmajor Special Revenue Funds	101,996	50,000	-	13,190	38,806	-
Nonmajor Capital Projects Funds	231,338	-	100,000	-	-	131,338
Major Enterprise - Detention Center	97,500	37,500	-	60,000	-	-
Nonmajor Enterprise Funds	40,000	-	-	40,000	-	-
Total	$ 554,808	$ 87,500	$ 100,000	$ 197,164	$ 38,806	$ 131,338

Following are explanations of certain interfund transfers of significance to the County:

The General Fund transferred money to the following funds: Detention Center $37,500 and China Springs $10,000 to help cover costs. The General Fund has an internally reported fund the Special Projects Fund which did a budgeted transfer to the Property Management Fund to help cover construction costs of $40,000.

The Road Fund transferred $100,000 to the Road Capital Projects Fund to help cover the costs of a new equipment.

The Federal in Lieu Fund transferred money to the following funds: Building Enterprise Fund $40,000, Detention Center Fund $60,000, and the Planning Fund $75,000 which is internally reported fund in the General Fund. These budgeted transfers were made to help cover operating costs. Transfers were also made for $8,974 to the County Grant Fund and $13,190 to the Senior Nutrition Fund for grant match.

The Room Tax Fund transferred $10,000 to the Fair Board Fund to help cover costs. The Regional Transportation Commission Fund transferred $28,806 to the Transportation Fund for operations.

The Capital Projects Fund transferred money to the following capital projects funds: $121,000 to the Vehicle Capital Projects for assistance with capital asset purchases; $10,338 to the Alamo, Panaca, and Pioche Town Capital Projects Funds for distribution of property taxes collected pursuant to Nevada Revised Statutes 354.59815.

NOTE D. DETAILED NOTES ON ALL FUNDS (Continued)

8. Interfund Receivable / Payable

The County purchased the local landfill and created the Solid Waste Enterprise Fund in 2017. To help cover initial costs and have cash available, the Solid Waste Enterprise Fund borrowed monies from two special revenue funds which is being repaid over 10 years at 0% interest. The funds which will receive those payments are as follows:

	Due to		Due from
Lincoln County Land Act	$ 180,000	Solid Waste Enterprise	$ 360,000
Lincoln County Water Special Use	180,000		
	$ 360,000		

Annual debt service requirements to maturity for the payable are as follows:

Year Ending June 30,	Principal
2020	$ 20,000
2021	40,000
2022	40,000
2023	40,000
2024	40,000
2025-2027	180,000
	$ 360,000

9. Unearned Revenue

Governmental funds report unearned revenue in connection with receivables for revenues that are not considered to be available to liquidate liabilities of the current period and also in connection with the resources that have been received but not yet earned. At June 30, 2019, the County had the following unearned revenues:

Qualifying expenditures for expenditure-driven grants have not occurred before June 30, 2019.

County Grant	Other Governmental	Total
$ 168,479	$ 94,601	$ 263,080

10. Unavailable Revenue

Delinquent taxes receivable not collected within sixty days after year-end are recorded as deferred inflows of resources as they are not available to pay liabilities of the current period. At June 30, 2019, the County had the following unavailable revenues:

General	Other Governmental	Total
$ 26,512	$ 11,143	$ 37,655

NOTE D. DETAILED NOTES ON ALL FUNDS (Continued)

11. Risk Management

Property, Casualty, Crime, and Machinery Insurance

The County is exposed to various risks of loss related to torts; theft of, damage to, and destruction of assets; errors and omissions; injuries to employees; and natural disasters. The County joined together with other local governments throughout the State of Nevada to create a pool under the Nevada Interlocal Cooperation Act. The Nevada Public Agency Insurance Pool (NPAIP) is a public entity risk pool currently operating as a common risk management and insurance program for members. The County pays an annual premium and specific deductibles, as necessary, to NPAIP for its general insurance coverage. NPAIP is considered a self-sustaining risk pool that will provide liability coverage for its members up to $10,000,000 per event and a $10,000,000 annual aggregate per member. Property, crime, and equipment breakdown coverage is provided to its members up to $300,000,000 per loss with various sub-limits established for earthquake, flood, equipment breakdown, and money and securities. As a participatory member, the maintenance deductible is $2,000 for each insured event.

The County is self-insured for unemployment claims. Payments are made from the general fund to cover claims.

The County participates in the Public Agency Compensation Trust (PACT). Premiums paid to PACT cover workers' compensation claims against the County. Premiums are based on a percentage of wages paid.

The County carries commercial insurance for all other risks of loss including employee health and accident insurance. Settled claims resulting from these risks have not exceeded commercial insurance coverage in any of the past three fiscal years.

12. Contingent Liabilities

Grants
Amounts received or receivable from grantor agencies are subject to audit and adjustment by those agencies, principally the Federal Government. Any disallowed claims, including amounts already collected, may constitute a liability of the applicable funds. The amount, if any, of expenditures which may be disallowed by the grantor cannot be determined at this time although the County expects such amounts, if any, to be immaterial.

Litigation
The County is a defendant in various lawsuits. Although the outcome of these lawsuits is not presently determinable, it is the opinion of the County's counsel that resolution of these matters will not have a material adverse effect on the financial condition of the County.

Landfill Closure and Post-Closure Costs
State and federal laws and regulations require the County to place a final cover on its landfill sites when it stops accepting waste and to perform certain maintenance and monitoring functions at the sites for thirty years after closure. The closure and post-closure care costs will be paid only near or after the date that the landfills stop accepting waste.

As of June 30, 2019, the estimated liability to date for closure and post-closure costs is $60,000. This represents the cumulative amount reported to date based on percent use of the estimated liability of $1,700,000 as the remaining capacity is used. Actual costs may be higher due to inflation, changes in technology, or changes in regulations. The County operates one landfill with an estimated remaining life of 39 years. As of June 30, 2019, $61,118, has been restricted for future closure, post-closure, and opening landfill costs in the Solid Waste Fund. The County is presently using the "Local Government Test" as financial assurance mechanism for its closure and post-closure costs.

NOTE D. DETAILED NOTES ON ALL FUNDS (Continued)

13. Defined Benefit Pension Plan

Plan Description. All half time and greater County employees are provided pension benefits through the Public Employees' Retirement System of the State of Nevada (PERS), a cost sharing multiple-employer, defined benefit plan administered by the Public Employees' Retirement System of the State of Nevada. PERS provides retirement benefits, disability benefits, and death benefits, including annual cost of living adjustments, to plan members and their beneficiaries. NRS Chapter 286 establishes the benefit provisions provided to the participants of PERS. These benefit provisions may only be amended through legislation. The Public Employees' Retirement System of the State of Nevada issues a publicly available financial report that includes financial statements and required supplementary information for PERS that can be obtained at www.nvpers.org under Quick Links — Publications.

Benefits Provided. Benefits, as required by the Nevada Revised Statutes (NRS or statute), are determined by the number of years of accredited service at time of retirement and the member's highest average compensation in any 36 consecutive months. Vested members are entitled to a life-time monthly retirement benefit equal to the service time multiplier (STM) percentages listed below times the member's years of service to a maximum of 30 years. The schedule of Eligibility for Monthly Unreduced Retirement Benefits for regular members and police/fire members are as follows:

Eligibility for Regular Members:

Years of Service	Hired prior to 07/01/01		Hired between 07/01/01-12/31/09		Hired Between 01/01/10-07/01/15		Hired After 7/1/15	
	Age	STM%	Age	STM%	Age	STM%	Age	STM%
5 years	65	2.50%	65	2.67%	65	2.50%	65	2.25%
10 years	60	2.50%	60	2.67%	62	2.50%	62	2.25%
30 years	Any	2.50%	Any	2.67%	Any	2.50%	55	2.25%
33 1/3 years							Any	2.25%

Eligibility for Police and Fire Members:

Years of Service	Hired prior to 07/01/01		Hired between 07/01/01-12/31/09		Hired Between 01/01/10-07/01/15		Hired After 7/1/15	
	Age	STM%	Age	STM%	Age	STM%	Age	STM%
5 years	65	2.50%	65	2.67%	65	2.50%	65	2.50%
10 years	55	2.50%	55	2.67%	60	2.50%	60	2.50%
20 years	50	2.50%	50	2.67%	50	2.50%	50	2.50%
25 years	Any	2.50%	Any	2.67%				
30 years					Any	2.50%	Any	2.50%

* Only service performed in a position as a police officer or firefighter may be counted towards eligibility for retirement as Police/Fire accredited service.

Benefit payments to which participants or their beneficiaries may be entitled under the plan include pension benefits, disability benefits, and survivor benefits. The System offers several alternatives to the unmodified service retirement allowance which, in general, allow the retired employee to accept a reduced service retirement allowance payable monthly during his or her lifetime and various optional monthly payments to a named beneficiary after his or her death. Post-retirement increases are provided by authority of NRS 286.575 - .579.

The normal ceiling limitation on monthly benefits allowances is 75% of average compensation. However, a member who has an effective date of membership before July 1, 1985, is entitled to a benefit of up to 90% of average compensation. Both Regular and Police/Fire members become fully vested as to benefits upon completion of five years of service.

NOTE D. DETAILED NOTES ON ALL FUNDS (Continued)

13. Defined Benefit Pension Plan (Continued)

Contributions: Benefits for plan members are funded under the employer pay contribution plan. The County is required to contribute all amounts due under the plan. PERS receives an actuarial valuation on an annual basis indicating the contribution rates required to fund the System on an actuarial reserve basis. Contributions actually made are in accordance with the required rates established by the Nevada Legislature. These statutory rates are increased/decreased pursuant to NRS 286.421 and 286.450. The County's required contribution rates for the year ending June 30, 2019, were 40.50% for police and fire; 28.00% for regular employees; 41.0% for judge; and 14.00% employee/employer match. The County has fully funded the amounts due for the year ending June 30, 2019. For purposes of GASB No. 82, the County recognized only the employer portion as a deferred outflow.

The actuary funding method used is the Entry Age Normal Cost Method. It is intended to meet the funding objective and result in a relatively level long-term contribution requirement as a percentage of salary.

Pension Liabilities, Pension Expense, and Deferred Outflows of Resources and Deferred Inflows of Resources Related to Pensions

At June 30, 2019, the County reported a liability of $11,215,383 for its proportionate share of the net pension liability. The net pension liability was measured as of June 30, 2018, and the total pension liability used to calculate the net pension liability was determined by an actuarial valuation as of that date. The County's allocation percentage of the net pension liability was based on the total contributions due on wages paid during the measurement period. Each employer's proportion of the net pension liability is based on their combined employer and member contributions relative to the total combined employer and member contributions for all employers for the period ended June 30, 2018. The County's proportionate share of the net pension liability decreased from 0.08407 percent at June 30, 2017 to 0.08224 at June 30, 2018.

For the year ended June 30, 2019, the County recognized pension expense of $575,077. At June 30, 2019, the County reported deferred outflows of resources and deferred inflows of resources related to pensions from the following sources:

	Deferred Outflows of Resources	Deferred Inflows of Resources
Differences between expected and actual results	$ 351,347	$ 520,586
Net difference between projected and actual earnings on pension plan investments	0	53,396
Changes in assumption	590,980	0
Changes in proportion	181,621	601,083
County Contributions subsequent to measurement date	636,643	0
Total	$ 1,760,591	$ 1,175,065

NOTE D. DETAILED NOTES ON ALL FUNDS (Continued)

13. Defined Benefit Pension Plan (Continued)

$636,643 was reported as deferred outflows of resources related to pensions resulting from County contributions subsequent to the measurement date will be recognized as a reduction of the net pension liability in the year ended June 30, 2019. Other amounts reported as deferred outflows of resources and deferred inflows of resources related to pensions will be recognized in pension expense as follows:

Year ended June 30:	
2020	$ 192,442
2021	3,689
2022	(289,169)
2023	(10,905)
2024	47,032
2025	5,794
	$(51,117)

Actuarial Assumptions: The System's net pension liability was measured as of June 30, 2018, and the total pension liability used to calculate the net pension liability was determined by an actuarial valuation as of that date. The total pension liability was determined using the following actuarial assumptions, applied to all periods included in the measurement:

Inflation rate	2.75%
Payroll Growth	5.00%, including inflation
Investment Rate of Return	7.50%
Productivity pay increase	0.50%
Projected Salary increases	Regular: 4.25% to 9.15%, depending on service
	Police/Fire: 4.55% to 13.90%, depending on service
	Rates include inflation and productivity increases
Consumer Price Index	2.75%
Other assumptions	Same as those used in the June 30, 2018 funding actuarial valuation.

Mortality rates were based on the RP-2014 Headcount-Weighted Mortality Table for Males and Females, as appropriate, with adjustments for mortality improvements based on Scale MP-2016.

Actuarial assumptions used in the June 30, 2018 valuation were based on the results of the experience review completed in 2017. The System's policies, which determine the investment portfolio target asset allocation, are established by the Public Employees' Retirement Board. The asset allocation is reviewed annually and is designed to meet the future risk and return needs of the System.

NOTE D. DETAILED NOTES ON ALL FUNDS (Continued)

13. Defined Benefit Pension Plan (Continued)

The following was the Board adopted policy target asset allocation as of June 30, 2018:

Asset Class	Target Allocation	Long-Term Geometric Expected Real Rate of Return*
Domestic Equity	42%	5.50%
International Equity	18%	5.75%
Domestic Fixed	30%	0.25%
Private Markets	10%	6.80%

*As of June 30, 2018, PERS' long-term inflation assumption was 2.75%

Discount Rate: The discount rate used to measure the total pension liability was 7.50% as of June 30, 2018. The projection of cash flows used to determine the discount rate assumed that employee and employer contributions will be made at the rate specified in statute. Based on that assumption, the pension plan's fiduciary net position at June 30, 2018, was projected to be available to make all projected future benefit payments of current active and inactive employees. Therefore, the long-term expected rate of return on pension plan investments was applied to all periods of projected benefit payments to determine the total pension liability as of June 30, 2018.

Sensitivity of the County's proportionate share of the net pension liability to change in the discount rate: The following presents the County's proportionate share of the net pension liability calculated using the discount rate of 7.50 percent, as well as what the County's proportionate share of the net pension liability would be if it were calculated using a discount rate that is 1 percent higher or lower than the current rate.

	1.0% Decrease (6.5%)	Discount Rate (7.5%)	1.0% Increase (8.5%)
County's proportionate share of the net pension liability	$ 17,103,456	$ 11,215,383	$ 6,323,279

Pension Plan Fiduciary Net Position: Detailed information about the pension plan's fiduciary net position is available in the PERS Comprehensive Annual Financial Report, available on the PERS website.

Pension contributions payable: At June 30, 2019, the County reported payables to the defined benefit pension plan of $53,797 for legally required employer contributions which had not yet been remitted to PERS.

NOTE D. DETAILED NOTES ON ALL FUNDS (Continued)

14. Post-Employment Healthcare Plan

Plan Description: The County subsidizes eligible retirees' contributions to the Public Employees' Benefits Plan (PEBP), an agent multiple-employer defined benefit postemployment health care plan administered by the State of Nevada. The plan provides medical, vision, dental and life insurance benefits to eligible retired County employees and beneficiaries. NRS 287.041 assigns the authority to establish and amend benefit provisions to the PEBP nine-member board of trustees. The plan is now closed to current County retirees. However, County employees who previously met the eligibility requirement for retirement within the Nevada Public Employees' Retirement System had the option upon retirement to enroll in coverage under the PEBP and the subsidy provided by the County was determined by their number of years of service. The PEBP issues a publicly available financial report that includes financial statements and required supplementary information. That report may be obtained by writing to Public Employee's Benefits Program, 901 S. Stewart Street, Suite 1001, Carson City, NV 89701, by calling (775) 684-7000, or by accessing the website at https://pebp.state.nv.us under Resources – Fiscal & Utilization Reports.

Employees covered by benefit terms. At June 30, 2019, the following employees were covered by the benefit terms:

Inactive employees or beneficiaries currently receiving benefit payments	25
Inactive employees entitled to but not yet receiving benefit payments	0
Active employees	0
	25

Funding Policy NRS 287.046 establishes the subsidies to be contributed toward the premium costs of the eligible retired County employees. As noted above, the County policy is to only fund retirees who retired prior to July 1, 2009. Plan members receiving benefits have their monthly contributions deducted from their pension checks based on the health plan chosen by the retiree as reduced by the amount of the subsidy. Effective July 2015, the subsidy provided to pre-Medicare retirees varies based on the type of plan selected (PPO or HMO) and by the level of coverage taken (e.g., single, two party, family, etc.). The chart below shows our understanding of monthly amounts currently payable for those with 15 years of PERS service.

Coverage Level	PPO CDHP		Statewide EPO/HMO	
	Base Subsidy	SB 552 Subsidy	Base Subsidy	SB 552 Subsidy
	15 Years of Service			
Retiree Only	$ 813.80	$163.65	$ 398.00	$ (11.66)
Retiree + Spouse	1,389.86	419.51	630.93	(28.22)
Retiree + Child(ren)	1,212.52	384.79	527.69	(5.39)
Retiree + Family	1,788.58	640.65	760.62	(21.95)

All Medicare eligible retirees participate in a Medicare Exchange with PEBP providing a service related contribution to a Health Reimbursement Arrangement (HRA) equal to $12 per month per year of service (maximum $240 per month). The contribution requirements of plan members and the County are established and amended by the PEBP board of trustees. As a participating employer, the County is billed for the subsidy on a monthly basis and is legally required under NRS 287.023 to provide for it.

For fiscal year 2019, the County contributed $41,195 to the plan for current premiums. The County did not prefund any future benefits.

NOTE D. DETAILED NOTES ON ALL FUNDS (Continued)

14. Post-Employment Healthcare Plan (Continued)

Important Dates used in the Valuation:

Valuation Date:	June 30, 2018
Measurement Date:	June 30, 2018
Measurement Period:	June 30, 2017 to June 30, 2018
Fiscal Year End:	June 30, 2019

Significant Results and Differences from the Prior Valuation:

There were no changes in benefit terms from the prior valuation. This valuation reflects the phased-in increase in subsidy levels for pre-Medicare retirees as required by SB 552. Updates were made to the discount rate, to the mortality assumptions, and to assumed future healthcare trends.

Total Other Post-Employment Benefits (OPEB) Liability

The County's OPEB liability of $428,645 was measured as of June 30, 2018, and determined by actuarial valuation as of that date.

The County has elected to calculate the total OPEB liability and related information using the alternative measurement method permitted by Governmental Accounting Standards Board Statement No. 75 for employers in plans with fewer than one hundred total plan members.

Actuarial Assumptions and Other Inputs: The total OPEB liability in the June 30, 2018, actuarial valuation was determined using the following actuarial assumptions and other inputs, applied to all periods included in the measurement:

	PEBP
Inflation rate	2.75%
Salary Increase	Not applicable; there are no active employees in this plan.
Discount Rate	2.98%
Healthcare Cost Trend Rates	6.25 decreasing 0.5% per year to an ultimate rate of 5.00% for 2024 and later years.
Retirees' share of benefit-related costs	0%

The discount rate was based on the S & P General Obligation Municipal Bond 20 year High Grade Index.

Mortality rates were based on the social security administration's actuarial life tables.

Actuarial assumptions used in the June 30, 2018, valuation were based on the results of an actuarial experience study for the period of June 30, 2017, to June 30, 2018.

NOTE D. DETAILED NOTES ON ALL FUNDS (Continued)

14. Post-Employment Healthcare Plan (Continued)

Changes in the Total OPEB Liability

	PEBP
Service cost	$ 0
Interest	17,218
Changes of benefit terms	0
Differences between expected and actual experience	0
Changes in assumptions or other inputs	(114,834)
Benefit payments	(51,515)
Net changes	(149,131)
Net OPEB obligation - beginning of the year	577,776
Net OPEB obligation - end of year	$ 428,645

Changes of assumptions and other inputs reflect a change in the discount rate from 3.13% as of June 30, 2017, to 2.98% as of June 30, 2018.

Sensitivity of the County's total OPEB liability to changes in the discount rate. The following presents the total OPEB liability of the County, as well as what the County's total OPEB liability would be if it were calculated using a discount rate that is 1 percent higher or lower than the current rate.

	1.0% Decrease (1.98%)	Discount Rate (2.98%)	1.0% Increase (3.98%)
PEBP	$ 465,045	$ 428,645	$ 396,288

Sensitivity of the County's total OPEB liability to changes in the healthcare cost trend rates. The following presents the total OPEB liability of the County, as well as what the County's total OPEB liability would be if it were calculated using healthcare cost trend rates that are 1 percent higher or lower than the current healthcare cost trend rates:

	1.0% Decrease (5.25% decreasing to 4.0%)	Discount Rate (6.25% decreasing to 5.0%)	1.0% Increase (7.25% decreasing to 6.0%)
PEBP	$ 394,777	$ 428,645	$ 466,072

NOTE D. DETAILED NOTES ON ALL FUNDS (Continued)

OPEB Expense, Deferred Outflows of Resources, and Deferred Inflows of Resources Related to OPEB

For the year ended June 30, 2019, the County recognized OPEB expense of $138,811. At June 30, 2019, the County reported deferred outflows of resources and deferred inflows of resources related to pensions from the following sources:

	Deferred Outflows of Resources	Deferred Inflows of Resources
Differences between expected and actual results	$ 0	$ 0
Changes of assumptions or other inputs	0	0
County Contributions subsequent to measurement date	41,195	0
Total	$ 41,195	$ 0

$41,195 reported as deferred outflows of resources related to OPEB resulting from County contributions subsequent to the measurement date will be recognized as a reduction of the total OPEB liability in the year ended June 30, 2020. There were no other amounts reported as deferred outflows of resources and deferred inflows of resources related to OPEB to be recognized as OPEB expense.

15. Water Sales

The Water District has entered into a water delivery teaming agreement. The purpose of the agreement is to develop a water infrastructure and provide wholesale water to adjoining water districts and/or developers who require water. Investment to develop the water sources are funded by the partner. The Water District is not required to provide funding. Should projects fail, the Water District has no liability for costs incurred by the partner. If the projects are completed and revenues are generated from the sale of water, revenues collected will be applied to the investment of the partner until paid in full for the successful projects. After payment of project expenditures, the Water District will be entitled to 50 percent of remaining monies. Should the Water District withdraw from the agreement, the Water District will be required to reimburse the partner's investment costs. Revenues, if any, from water sales are recorded in the Lincoln County Water District funds.

LINCOLN COUNTY, NEVADA
REQUIRED SUPPLEMENTARY INFORMATION
MAJOR FUND - GENERAL FUND
SCHEDULE OF REVENUES, EXPENDITURES AND CHANGES IN FUND BALANCE
BUDGET (BUDGETARY BASIS) AND ACTUAL
Year Ended June 30, 2019

	Original Budget	Final Budget	Actual	Variance With Final Budget Positive (Negative)
Revenues:				
Taxes:				
Property taxes	$ 2,215,938	$ 2,215,938	$ 2,240,230	$ 24,292
Licenses and permits:				
Business licenses	7,200	7,200	9,945	2,745
Liquor licenses	5,100	5,100	6,560	1,460
Gaming licenses	5,200	5,200	3,750	(1,450)
Marriage licenses	650	650	462	(188)
Total licenses and permits	18,150	18,150	20,717	2,567
Intergovernmental:				
Gaming tax	141,000	141,000	132,437	(8,563)
Private car line tax	4,100	4,100	2	(4,098)
Water District	7,000	7,000	2,414	(4,586)
Consolidated tax	1,337,716	1,337,716	1,385,248	47,532
Grants	28,305	28,305	66,210	37,905
Marijuana fees	88,235	88,235	88,235	-
Fish and wildlife	-	-	2,943	2,943
Total intergovernmental	1,606,356	1,606,356	1,677,489	71,133
Charges for services:				
Clerk fees	14,000	14,000	8,988	(5,012)
Recorder fees	50,000	50,000	43,074	(6,926)
Assessor commissions	65,500	65,500	40,008	(25,492)
Sheriff fees	2,500	2,500	6,530	4,030
Tax penalties and costs	45,000	45,000	59,542	14,542
District attorney fees	500	500	4,564	4,064
Civil fees	-	-	3,374	3,374
Security contract	122,000	122,000	61,000	(61,000)
Caliente police contract	75,000	75,000	64,800	(10,200)
Caliente court contract	7,000	7,000	3,850	(3,150)
Spay & neuter license plate fees	1,000	1,000	-	(1,000)
Total charges for services	382,500	382,500	295,730	(86,770)
Fines and forfeitures:				
Fines and forfeitures	360,000	360,000	361,968	1,968
Miscellaneous:				
Investment income	10,000	10,000	167,048	157,048
Rent, sales, refunds	40,000	40,000	38,654	(1,346)
Solid waste	4,000	4,000	-	(4,000)
Other	5,000	5,000	8,412	3,412
Total miscellaneous	59,000	59,000	214,114	155,114
Total revenues	$ 4,641,944	$ 4,641,944	$ 4,810,248	$ 168,304

See accompanying notes to required supplementary information.

LINCOLN COUNTY, NEVADA
REQUIRED SUPPLEMENTARY INFORMATION
MAJOR FUND - GENERAL FUND
SCHEDULE OF REVENUES, EXPENDITURES AND CHANGES IN FUND BALANCE
BUDGET (BUDGETARY BASIS) AND ACTUAL (CONTINUED)
Year Ended June 30, 2019

	Original Budget	Final Budget	Actual	Variance With Final Budget Positive (Negative)
General government:				
Administration:				
County commissioners:				
Salaries and wages	$ 111,829	$ 111,829	$ 108,751	$ 3,078
Employee benefits	81,135	81,135	63,290	17,845
Services and supplies	22,250	25,250	23,517	1,733
Total county commissioners	215,214	218,214	195,558	22,656
Executive officer:				
Salaries and wages	21,008	21,008	20,675	333
Employee benefits	11,765	11,765	12,511	(746)
Services and supplies	1,150	3,150	1,312	1,838
Total executive officer	33,923	35,923	34,498	1,425
Clerk:				
Salaries and wages	125,460	125,460	119,236	6,224
Employee benefits	52,748	52,748	51,388	1,360
Services and supplies	49,050	49,050	21,468	27,582
Total clerk	227,258	227,258	192,092	35,166
Treasurer:				
Salaries and wages	113,800	113,800	115,494	(1,694)
Employee benefits	50,998	50,998	50,062	936
Services and supplies	14,030	14,030	10,905	3,125
Total treasurer	178,828	178,828	176,461	2,367
Auditor and recorder:				
Salaries and wages	150,637	150,637	147,844	2,793
Employee benefits	67,118	67,118	62,164	4,954
Services and supplies	16,255	16,255	11,782	4,473
Total auditor and recorder	234,010	234,010	221,790	12,220
Assessor:				
Salaries and wages	147,346	147,346	152,866	(5,520)
Employee benefits	70,640	70,640	72,854	(2,214)
Services and supplies	24,608	24,608	10,558	14,050
Total assessor	242,594	242,594	236,278	6,316
Grant administrator:				
Salaries and wages	57,200	57,200	57,190	10
Employee benefits	20,750	20,750	20,032	718
Services and supplies	8,200	8,200	4,033	4,167
Total grant administrator	86,150	86,150	81,255	4,895

See accompanying notes to required supplementary information.

LINCOLN COUNTY, NEVADA
REQUIRED SUPPLEMENTARY INFORMATION
MAJOR FUND - GENERAL FUND
SCHEDULE OF REVENUES, EXPENDITURES AND CHANGES IN FUND BALANCE
BUDGET (BUDGETARY BASIS) AND ACTUAL (CONTINUED)
Year Ended June 30, 2019

	Original Budget	Final Budget	Actual	Variance With Final Budget Positive (Negative)
General government (Continued):				
Business license:				
Salaries and wages	$ 5,187	$ 5,887	$ 6,770	$ (883)
Employee benefits	1,881	1,181	1,503	(322)
Services and supplies	1,500	1,500	898	602
Total business license	8,568	8,568	9,171	(603)
Buildings and grounds:				
Pioche:				
Salaries and wages	30,244	30,244	46,141	(15,897)
Employee benefits	8,857	8,857	9,310	(453)
Services and supplies	128,825	128,825	104,628	24,197
Total Pioche	167,926	167,926	160,079	7,847
Alamo:				
Salaries and wages	9,781	9,781	5,634	4,147
Employee benefits	1,041	1,041	588	453
Services and supplies	20,000	20,000	14,446	5,554
Total Alamo	30,822	30,822	20,668	10,154
Total buildings and grounds	198,748	198,748	180,747	18,001
Other general expenses:				
Employee benefits	42,000	42,000	41,059	941
Services and supplies	219,200	219,200	130,201	88,999
Total other general expenses	261,200	261,200	171,260	89,940
Total general government	1,686,493	1,691,493	1,499,110	192,383

See accompanying notes to required supplementary information.

LINCOLN COUNTY, NEVADA
REQUIRED SUPPLEMENTARY INFORMATION
MAJOR FUND - GENERAL FUND
SCHEDULE OF REVENUES, EXPENDITURES AND CHANGES IN FUND BALANCE
BUDGET (BUDGETARY BASIS) AND ACTUAL (CONTINUED)
Year Ended June 30, 2019

	Original Budget	Final Budget	Actual	Variance With Final Budget Positive (Negative)
Public safety:				
Sheriff:				
Salaries and wages	$ 842,643	$ 842,643	$ 837,160	$ 5,483
Employee benefits	530,726	530,726	506,223	24,503
Services and supplies	228,375	200,468	155,051	45,417
Capital outlay	-	27,907	24,692	3,215
Total sheriff	1,601,744	1,601,744	1,523,126	78,618
Emergency management:				
Salaries and wages	27,374	27,374	27,374	-
Employee benefits	10,107	10,107	9,870	237
Services and supplies	5,955	5,955	265	5,690
Total emergency management	43,436	43,436	37,509	5,927
Caliente contract:				
Salaries and wages	94,924	94,924	86,334	8,590
Employee benefits	58,374	58,374	49,901	8,473
Services and supplies	4,600	4,600	884	3,716
Total Caliente contract	157,898	157,898	137,119	20,779
Total public safety	1,803,078	1,803,078	1,697,754	105,324
Judicial:				
District court:				
Salaries and wages	118,245	118,245	65,512	52,733
Services and supplies	208,350	218,350	237,990	(19,640)
Total district court	326,595	336,595	303,502	33,093
District attorney:				
Salaries and wages	250,309	243,885	219,371	24,514
Employee benefits	118,058	118,058	81,086	36,972
Services and supplies	20,550	20,550	17,438	3,112
Capital outlay	-	6,424	6,424	-
Total district attorney	388,917	388,917	324,319	64,598

See accompanying notes to required supplementary information.

LINCOLN COUNTY, NEVADA
REQUIRED SUPPLEMENTARY INFORMATION
MAJOR FUND - GENERAL FUND
SCHEDULE OF REVENUES, EXPENDITURES AND CHANGES IN FUND BALANCE
BUDGET (BUDGETARY BASIS) AND ACTUAL (CONTINUED)
Year Ended June 30, 2019

	Original Budget	Final Budget	Actual	Variance With Final Budget Positive (Negative)
Judicial (Continued):				
Law library	$ 12,100	$ 12,100	$ 8,306	$ 3,794
Public guardian	4,750	4,750	537	4,213
Public administrator	3,250	3,250	468	2,782
Justice court:				
Juvenile officers:				
Salaries and wages	63,201	63,201	68,050	(4,849)
Employee benefits	33,754	33,754	31,763	1,991
Services and supplies	20,000	20,000	6,580	13,420
Total juvenile officers	116,955	116,955	106,393	10,562
Alamo:				
Salaries and wages	143,442	143,442	127,794	15,648
Employee benefits	64,564	64,564	58,074	6,490
Services and supplies	14,750	14,750	13,429	1,321
Total Alamo	222,756	222,756	199,297	23,459
Meadow Valley:				
Salaries and wages	116,029	116,029	110,558	5,471
Employee benefits	61,133	61,133	57,528	3,605
Services and supplies	19,300	19,300	11,773	7,527
Total Meadow Valley	196,462	196,462	179,859	16,603
Total judicial	1,271,785	1,281,785	1,122,681	159,104
Health:				
State nurse	33,552	56,552	52,387	4,165
Animal control	1,000	1,000	-	1,000
	34,552	57,552	52,387	5,165
Contingency	50,000	-	-	-
Total expenditures	$ 4,845,908	$ 4,833,908	$ 4,371,932	$ 461,976

See accompanying notes to required supplementary information.

LINCOLN COUNTY, NEVADA
REQUIRED SUPPLEMENTARY INFORMATION
MAJOR FUND - GENERAL FUND
SCHEDULE OF REVENUES, EXPENDITURES AND CHANGES IN FUND BALANCE
BUDGET (BUDGETARY BASIS) AND ACTUAL (CONTINUED)
Year Ended June 30, 2019

	Original Budget	Final Budget	Actual	Variance With Final Budget Positive (Negative)
Excess (deficiency) of revenues over expenditures	$ (203,964)	$ (191,964)	$ 438,316	$ 630,280
Other financing sources (uses):				
Operating transfers out	(220,752)	(270,252)	(258,252)	12,000
Net change in fund balance	(424,716)	(462,216)	180,064	642,280
Fund balance:				
Beginning of year	598,226	635,726	773,139	137,413
End of year	$ 173,510	$ 173,510	$ 953,203	$ 779,693

See accompanying notes to required supplementary information.

LINCOLN COUNTY, NEVADA
REQUIRED SUPPLEMENTARY INFORMATION
MAJOR FUND - ROAD SPECIAL REVENUE FUND
SCHEDULE OF REVENUES, EXPENDITURES AND CHANGES IN FUND BALANCE
IN FUND BALANCE - BUDGET AND ACTUAL
Year Ended June 30, 2019

	Original Budget	Final Budget	Actual	Variance With Final Budget Positive (Negative)
Revenues:				
Intergovernmental:				
Gasoline tax $2.35	$ 1,062,774	$ 1,062,774	$ 1,047,520	$ (15,254)
Gasoline tax $1.25	611,160	611,160	603,047	(8,113)
Gasoline tax $1.75	47,766	47,766	49,190	1,424
Optional $0.01 tax	23,176	23,176	23,804	628
National forest	-	-	15,140	15,140
Total intergovernmental	1,744,876	1,744,876	1,738,701	(6,175)
Miscellaneous:				
Investment income	800	800	10,080	9,280
Other	15,000	15,000	-	(15,000)
Total miscellaneous	15,800	15,800	10,080	(5,720)
Total revenues	1,760,676	1,760,676	1,748,781	(11,895)
Expenditures:				
Current:				
Public works:				
Highways and streets:				
Salaries and wages	684,583	684,583	625,336	59,247
Employee benefits	355,183	355,183	271,964	83,219
Services and supplies	801,700	801,700	513,047	288,653
Total expenditures	1,841,466	1,841,466	1,410,347	431,119
Excess (deficiency) of revenues over expenditures	(80,790)	(80,790)	338,434	419,224
Other financing sources (uses):				
Operating transfers out	(100,000)	(100,000)	(100,000)	-
Net change in fund balance	(180,790)	(180,790)	238,434	419,224
Fund balance:				
Beginning of year	257,650	257,650	636,840	379,190
End of year	$ 76,860	$ 76,860	$ 875,274	$ 798,414

See accompanying notes to required supplementary information.

LINCOLN COUNTY, NEVADA
REQUIRED SUPPLEMENTARY INFORMATION
MAJOR FUND - FEDERAL IN LIEU TAX SPECIAL REVENUE FUND
SCHEDULE OF REVENUES, EXPENDITURES AND CHANGES IN FUND BALANCE
IN FUND BALANCE - BUDGET AND ACTUAL
Year Ended June 30, 2019

	Original Budget	Final Budget	Actual	Variance With Final Budget Positive (Negative)
Revenues:				
Intergovernmental:				
Federal in lieu tax	$ 893,189	$ 893,189	$ 932,088	$ 38,899
Grants	-	-	6,978	6,978
Total intergovernmental	893,189	893,189	939,066	45,877
Miscellaneous:				
Investment income	5,000	5,000	41,902	36,902
Total revenues	898,189	898,189	980,968	82,779
Expenditures:				
Current:				
General government:				
Services and supplies	955,426	955,426	500,284	455,142
Capital outlay	364,500	364,500	33,018	331,482
Total general government	1,319,926	1,319,926	533,302	786,624
Public safety:				
Services and supplies	74,500	74,500	52,533	21,967
Capital outlay	34,400	34,400	-	34,400
Total public safety	108,900	108,900	52,533	56,367
Welfare:				
Services and supplies	12,000	12,000	-	12,000
Community support:				
Services and supplies	16,957	16,957	16,602	355
Intergovernmental:				
Services and supplies	80,000	80,000	83,755	(3,755)
Debt service:				
Principal	50,641	50,641	50,641	-
Interest	1,948	1,948	1,935	13
Total debt service	52,589	52,589	52,576	13
Total expenditures	1,590,372	1,590,372	738,768	851,604
Excess (deficiency) of revenues over expenditures	(692,183)	(692,183)	242,200	934,383
Other financing sources (uses):				
Operating transfers out	(175,000)	(175,000)	(197,164)	(22,164)
Net change in fund balance	(867,183)	(867,183)	45,036	912,219
Fund balance:				
Beginning of year	1,054,700	1,054,700	2,083,792	1,029,092
End of year	$ 187,517	$ 187,517	$ 2,128,828	$ 1,941,311

See accompanying notes to required supplementary information.

LINCOLN COUNTY, NEVADA
REQUIRED SUPPLEMENTARY INFORMATION
MAJOR FUND - LINCOLN COUNTY WATER DISTRICT
WATER RESOURCES SPECIAL REVENUE FUND
SCHEDULE OF REVENUES, EXPENDITURES AND CHANGES IN FUND BALANCE
IN FUND BALANCE - BUDGET AND ACTUAL
Year Ended June 30, 2019

	Original Budget	Final Budget	Actual	Variance With Final Budget Positive (Negative)
Revenues:				
Miscellaneous:				
Investment income	$ 500	$ 500	$ 107,795	$ 107,295
Expenditures:				
Current:				
General government:				
Services and supplies	1,356,441	1,356,441	-	1,356,441
Excess (deficiency) of revenues over expenditures	(1,355,941)	(1,355,941)	107,795	1,463,736
Fund balance:				
Beginning of year	1,355,941	1,355,941	2,733,415	1,377,474
End of year	$ -	$ -	$ 2,841,210	$ 2,841,210

See accompanying notes to required supplementary information.

LINCOLN COUNTY, NEVADA
REQUIRED SUPPLEMENTARY INFORMATION
MAJOR FUND - LINCOLN COUNTY LAND ACT SPECIAL USE - SPECIAL REVENUE FUND
SCHEDULE OF REVENUES, EXPENDITURES AND CHANGES IN FUND BALANCE
IN FUND BALANCE - BUDGET AND ACTUAL
Year Ended June 30, 2019

	Original Budget	Final Budget	Actual	Variance With Final Budget Positive (Negative)
Revenues:				
Miscellaneous:				
Investment income	$ 6,000	$ 6,000	$ 71,047	$ 65,047
Rent	30,000	30,000	30,276	276
Total revenues	36,000	36,000	101,323	65,323
Expenditures:				
Current:				
General government:				
Services and supplies	250,000	250,000	-	250,000
Excess (deficiency) of revenues over expenditures	(214,000)	(214,000)	101,323	315,323
Fund balance:				
Beginning of year	3,507,440	3,507,440	3,758,724	251,284
End of year	$ 3,293,440	$ 3,293,440	$ 3,860,047	$ 566,607

See accompanying notes to required supplementary information.

LINCOLN COUNTY, NEVADA
REQUIRED SUPPLEMENTARY INFORMATION
MAJOR FUND - COUNTY GRANT - SPECIAL REVENUE FUND
SCHEDULE OF REVENUES, EXPENDITURES AND CHANGES IN FUND BALANCE
IN FUND BALANCE - BUDGET AND ACTUAL
Year Ended June 30, 2019

	Original Budget	Final Budget	Actual	Variance With Final Budget Positive (Negative)
Revenues:				
Intergovernmental:				
Grants	$ -	$ 1,296,187	$ 1,119,155	$ (177,032)
Miscellaneous:				
Investment income	-	-	1,003	1,003
Total revenues	-	1,296,187	1,120,158	(176,029)
Expenditures:				
Current:				
General government	-	370,257	340,665	29,592
Public safety	-	229,981	190,166	39,815
Public works	-	471,168	468,671	2,497
Welfare	-	128,982	111,335	17,647
Culture and recreation	-	95,799	17,292	78,507
Total expenditures	-	1,296,187	1,128,129	168,058
Excess (deficiency) of revenues over expenditures	-	-	(7,971)	(7,971)
Other financing sources (uses):				
Operating transfers in	-	-	8,974	8,974
Net change in fund balance	-	-	1,003	1,003
Fund balance:				
Beginning of year	-	-	63,142	63,142
End of year	$ -	$ -	$ 64,145	$ 64,145

See accompanying notes to required supplementary information.

LINCOLN COUNTY, NEVADA
REQUIRED SUPPLEMENTARY INFORMATION
RECONCILIATION OF THE GENERAL FUND (BUDGETARY BASIS)
TO THE GENERAL FUND (GAAP BASIS)
SCHEDULE OF REVENUE, EXPENDITURES, AND CHANGES IN FUND BALANCES
For the Year Ended June 30, 2019

	General Fund Budgetary Basis	Internally Reported Funds	Eliminations	General Fund GAAP Basis
Revenues:				
Taxes	$ 2,240,230	-	$ -	$ 2,240,230
Licenses and permits	20,717	-	-	20,717
Intergovernmental	1,677,489	-	-	1,677,489
Charges for services	295,730	12,385	-	308,115
Fines and forfeitures	361,968	-	-	361,968
Miscellaneous	214,114	10,211	-	224,325
Total revenues	4,810,248	22,596	-	4,832,844
Expenditures:				
Current:				
General government	1,499,110	26,837	-	1,525,947
Public safety	1,697,754	-	-	1,697,754
Judicial	1,122,681	-	-	1,122,681
Public works	-	81,646	-	81,646
Health	52,387	-	-	52,387
Total expenditures	4,371,932	108,483	-	4,480,415
Excess (deficiency) of revenues over expenditures	438,316	(85,887)	-	352,429
Other financing sources (uses):				
Operating transfers in	-	285,752	(210,752)	75,000
Operating transfers out	(258,252)	(40,000)	210,752	(87,500)
Total other financing sources (uses)	(258,252)	245,752	-	(12,500)
Net change in fund balance	180,064	159,865	-	339,929
Fund balance:				
Beginning of year	773,139	536,409	-	1,309,548
End of year	$ 953,203	$ 696,274	$ -	$ 1,649,477

See accompanying notes to required supplementary information.

LINCOLN COUNTY, NEVADA
REQUIRED SUPPLEMENTARY INFORMATION
SCHEDULE OF CHANGES IN THE COUNTY'S TOTAL OPEB LIABILITY AND RELATED RATIOS
JUNE 30, 2019

	6/30/2019	6/30/2018
Total OPEB Liability		
Service cost	$ -	$ -
Interest	17,218	27,562
Changes of assumptions or other inputs	(114,834)	(270,391)
Benefit Payments	(51,515)	(59,983)
Net Change in total OPEB liability	(149,131)	(302,812)
Total OPEB liability - beginning	577,776	880,588
Total OPEB liability - ending	$ 428,645	$ 577,776
Covered-employee payroll	$ -	$ -
Total OPEB liability as a percentage of covered-employee payroll	0.00%	0.00%

Note: PEBP closed to new County participants as of November 1, 2008; therefore, covered payroll is zero.

Changes of assumptions and other inputs reflect the effects of changes in the discount rate each period. The following are the discount rates used in each period.

6/30/2019	2.98
6/30/2018	3.13
6/30/2017	2.68

See accompanying notes to required supplementary information.

LINCOLN COUNTY, NEVADA
REQUIRED SUPPLEMENTARY INFORMATION
SCHEDULE OF THE COUNTY'S CONTRIBUTIONS TO THE
PUBLIC EMPLOYEES' RETIREMENT SYSTEM OF THE STATE OF NEVADA
FOR THE FISCAL YEAR ENDED JUNE 30, 2019

Year Ended June 30	Contractually Determined Contributions	Contributions in Relation to the Actuarially Determined Contributions	Contribution Deficiency (Excess)	Covered Employee Payroll	Contributions as a Percentage of Covered Employee Payroll
2014	$ 1,164,559	$ 1,164,559	$ -	$4,098,726	28.41%
2015	1,232,695	1,232,695	-	4,381,264	28.14%
2016	1,321,892	1,321,892	-	4,218,947	31.33%
2017	1,303,882	1,303,882	-	4,687,633	27.82%
2018	647,630	647,630	-	4,770,281	13.58%
2019	766,760	766,760	-	4,687,633	16.36%

Information previous to 2013 is not available.

Beginning with the year-ended 2018, all contributions shown reflect employer-paid contributions only, and employer-paid member contributions are excluded. Actuarially Determined Contributions above are based on actuarially determined contribution rates (employer portion only) from the most recent rate-setting year prior to the year shown, applied to covered payroll for year shown.

See accompanying notes to required supplementary information.

LINCOLN COUNTY, NEVADA
REQUIRED SUPPLEMENTARY INFORMATION
SCHEDULE OF THE COUNTY'S PROPORTIONATE SHARE OF THE NET PENSION LIABILITY
PUBLIC EMPLOYEES' RETIREMENT SYSTEM OF THE STATE OF NEVADA
FOR THE FISCAL YEAR ENDED JUNE 30, 2019

Reporting Year Ended June 30:	County's proportion of the net pension liability	County's proportionate share of the net pension liability	County's covered-employee payroll	County's proportionate share of the net pension liability as a percentage of its covered-employee payroll	Plan fiduciary net position as a percentage of the total pension liability
2015	0.08508%	8,866,756	4,098,726	216.33%	76.31%
2016	0.08864%	10,157,192	4,381,264	231.83%	75.10%
2017	0.08800%	11,842,446	4,218,947	280.70%	72.20%
2018	0.08407%	11,180,767	4,687,633	238.52%	74.40%
2019	0.08224%	11,215,383	4,770,281	235.11%	75.20%

Fiscal year 2015 was the first year of implementation, therefore, only five years are shown.

The County's proportionate share of the net pension liability is based upon the measurment taken on June 30th, of the prior year.

See accompanying notes to required supplementary information.

Note 1 – Explanation of Differences between General Fund (Budgetary Basis) and General Fund (GAAP Basis)

The accompanying Reconciliation of the General Fund (Budgetary Basis) to the General Fund (GAAP Basis) presents balances combined for external financial reporting purposes.

With the implementation of GASB Statement 54, *Fund Balance Reporting and Governmental Fund Type Definitions*, the budgetary basis of accounting for the General Fund differs from generally accepted accounting principles (GAAP).

Guidance in GASB Statement 54 changed the definition of Special Revenue Funds for financial reporting purposes. Pursuant to statute, budget comparisons are required using the budget adopted. Six internally reported special revenue funds of the County (Stabilization, Planning, Rachel Jones Memorial Cemetery, Flood Control, Special Projects, Lincoln County Land Act Emergency Disaster, and Lincoln County Water Emergency Disaster) are combined with the General Fund for external reporting purposes to conform with generally accepted accounting principles.

Note 2 – Net Pension Liability

Changes in benefit terms. Legislation passed in the 2015 Legislative session made changes to a number of plan provisions. These changes were effective July 1, 2015 and apply only to members whose effective date of membership is on or after July 1, 2015. Changes to certain survivor benefit provisions were made effective for survivors of members killed in the line of duty or in the course of employment on or after July 1, 2013, for payments on or after July 1, 2015. The July 1, 2015, sunset on the critical labor shortage exception to the reemployment restriction was repealed. There have been no changes in benefit terms since the last valuation.

Changes in assumptions. Changes of assumptions and other inputs reflect the effects of changes in the discount rate each period.

Note 3 – Other Post-Employment Benefits Liability

Changes in benefit terms. There have been no changes in benefit terms since the last valuation.

Changes in assumptions. Changes of assumptions and other inputs reflect the effects of changes in the discount rate each period.

LINCOLN COUNTY, NEVADA
NONMAJOR GOVERNMENTAL FUNDS
COMBINING BALANCE SHEET
JUNE 30, 2019

	Nonmajor Special Revenue Funds	Nonmajor Capital Projects Funds	Totals
ASSETS			
Pooled cash and investments	$ 7,584,714	$ 1,167,660	$ 8,752,374
Interest receivable	17,652	4,089	21,741
Taxes receivable	21,286	1,715	23,001
Due from other governments	89,160	-	89,160
Prepaid expense	40,000	-	40,000
Interfund receivable	180,000	-	180,000
Total assets	$ 7,932,812	$ 1,173,464	$ 9,106,276
LIABILITIES			
Accounts payable	$ 189,113	$ 201	$ 189,314
Accrued payroll and benefits	55,090	-	55,090
Unearned revenue	94,601	-	94,601
Total liabilities	338,804	201	339,005
DEFERRED INFLOWS OF RESOURCES			
Unavailable revenue - property taxes	9,783	1,360	11,143
FUND BALANCE			
Nonspendable	40,000	-	40,000
Restricted for:			
Capital projects	-	1,171,903	1,171,903
Unincorporated towns	280,019	-	280,019
Multi-species conservation	879,908	-	879,908
General government	230,811	-	230,811
Public safety	59,838	-	59,838
Judicial	289,301	-	289,301
Public works	815,674	-	815,674
Health	496	-	496
Welfare	814,730	-	814,730
Culture and recreation	244,626	-	244,626
Community support	228,857	-	228,857
Intergovernmental	1,454	-	1,454
Committed for:			
Land act	134,807	-	134,807
Water	2,746,544	-	2,746,544
Lincoln County Water District	668,869		668,869
General government	124,101	-	124,101
Health	23,668	-	23,668
Unassigned	522	-	522
Total fund balance	7,584,225	1,171,903	8,756,128
Total liabilities, deferred inflows of resources, and fund balance	$ 7,932,812	$ 1,173,464	$ 9,106,276

LINCOLN COUNTY, NEVADA
NONMAJOR GOVERNMENTAL FUNDS
COMBINING STATEMENT OF REVENUES, EXPENDITURES,
AND CHANGES IN FUND BALANCE
Year Ended June 30, 2019

	Nonmajor Special Revenue Funds	Nonmajor Capital Projects Funds	Totals
Revenues:			
Taxes	$ 853,161	$ 114,793	$ 967,954
Licenses and permits	3,960	-	3,960
Intergovernmental	574,593	126	574,719
Charges for services	1,119,708	-	1,119,708
Fines and forfeitures	44,819	-	44,819
Miscellaneous	273,840	34,117	307,957
Total revenues	2,870,081	149,036	3,019,117
Expenditures:			
Current:			
General government	1,155,338	-	1,155,338
Public safety	9,569	-	9,569
Judicial	61,694	-	61,694
Public works	95,383	-	95,383
Health	218,516	-	218,516
Welfare	564,610	-	564,610
Culture and recreation	335,923	-	335,923
Community support	229,551	-	229,551
Intergovernmental	24,184	8,040	32,224
Capital outlay	-	197,326	197,326
Debt service:			
Principal	-	77,146	77,146
Interest	-	1,834	1,834
Total expenditures	2,694,768	284,346	2,979,114
Excess (deficiency) of revenues over expenditures	175,313	(135,310)	40,003
Other financing sources (uses):			
Operating transfers in	101,996	231,338	333,334
Operating transfers out	(38,806)	(131,338)	(170,144)
Capital lease proceeds	-	133,245	133,245
Total other financing sources (uses)	63,190	233,245	296,435
Net change in fund balance	238,503	97,935	336,438
Fund balance:			
Beginning of year	7,345,722	1,073,968	8,419,690
End of year	$ 7,584,225	$ 1,171,903	$ 8,756,128

LINCOLN COUNTY, NEVADA
RECONCILIATION OF THE GENERAL FUND (BUDGETARY BASIS)
TO THE GENERAL FUND (GAAP BASIS)
BALANCE SHEET
June 30, 2019

	General Fund Budgetary Basis	Internally Reported Funds	General Fund GAAP Basis
ASSETS			
Pooled cash and investments	$ 950,225	$ 703,993	$ 1,654,218
Interest receivable	18,939	1,158	20,097
Taxes receivable	33,425	-	33,425
Due from other governments	249,422	-	249,422
Total assets	$ 1,252,011	$ 705,151	$ 1,957,162
LIABILITIES			
Accounts payable	$ 81,550	$ 6,723	$ 88,273
Accrued payroll and benefits	190,746	2,154	192,900
Total liabilities	272,296	8,877	281,173
DEFERRED INFLOWS OF RESOURCES			
Unavailable revenue - property taxes	26,512	-	26,512
FUND BALANCE			
Restricted for:			
Stabilization	-	133,488	133,488
Rachel Jones Cemetery	-	827	827
General government	-	356,424	356,424
Committed for:			
Planning	-	34,921	34,921
Flood Control	-	39,920	39,920
Land Act	-	65,999	65,999
Water	-	64,695	64,695
Assigned for:			
Subsequent year	451,861	-	451,861
Unassigned	501,342	-	501,342
Total fund balance	953,203	696,274	1,649,477
Total liabilities, deferred inflows of resources, and fund balance	$ 1,252,011	$ 705,151	$ 1,957,162

LINCOLN COUNTY, NEVADA
MAJOR FUND - GENERAL FUND (BUDGETARY BASIS)
COMPARATIVE BALANCE SHEETS
June 30, 2019 and 2018

	2019	2018
ASSETS		
Pooled cash and investments	$ 950,225	$ 683,129
Interest receivable	18,939	3,195
Taxes receivable	33,425	32,550
Due from other governments	249,422	397,413
Due from other funds	-	89,535
Total assets	$ 1,252,011	$ 1,205,822
LIABILITIES		
Accounts payable	$ 81,550	$ 194,918
Accrued payroll and benefits	190,746	211,062
Total liabilities	272,296	405,980
DEFERRED INFLOWS OF RESOURCES		
Unavailable revenue - property taxes	26,512	26,703
FUND BALANCE		
Assigned for subsequent year	451,861	598,226
Unassigned	501,342	174,913
Total fund balance	953,203	773,139
Total liabilities, deferred inflows of resources, and fund balance	$ 1,252,011	$ 1,205,822

LINCOLN COUNTY, NEVADA
MAJOR FUND - GENERAL FUND
SCHEDULE OF REVENUES, EXPENDITURES, AND CHANGES IN FUND BALANCE
BUDGET (BUDGETARY BASIS) AND ACTUAL
Year Ended June 30, 2019
(With Comparative Actual Amounts for Year Ended June 30, 2018)

	2019 Budget	2019 Actual	Variance - Positive (Negative)	2018 Actual
Revenues:				
Taxes	$ 2,215,938	$ 2,240,230	$ 24,292	$ 2,132,619
Licenses and permits	18,150	20,717	2,567	19,872
Intergovernmental	1,606,356	1,677,489	71,133	1,598,724
Charges for services	382,500	295,730	(86,770)	356,962
Fines and forfeitures	360,000	361,968	1,968	293,668
Miscellaneous	59,000	214,114	155,114	55,602
Total revenues	4,641,944	4,810,248	168,304	4,457,447
Expenditures:				
Current:				
General government	1,691,493	1,499,110	192,383	1,555,061
Public safety	1,803,078	1,697,754	105,324	1,723,882
Judicial	1,281,785	1,122,681	159,104	1,282,536
Health	57,552	52,387	5,165	52,388
Contingency	-	-	-	-
Total expenditures	4,833,908	4,371,932	461,976	4,613,867
Excess (deficiency) of revenues over expenditures	(191,964)	438,316	630,280	(156,420)
Other financing sources (uses):				
Operating transfers in	-	-	-	603,500
Operating transfers out	(270,252)	(258,252)	12,000	(156,000)
Total other financing sources (uses)	(270,252)	(258,252)	12,000	447,500
Net change in fund balance	(462,216)	180,064	642,280	291,080
Fund balance:				
Beginning of year	635,726	773,139	137,413	482,059
End of year	$ 173,510	$ 953,203	$ 779,693	$ 773,139

LINCOLN COUNTY, NEVADA
MAJOR FUND - GENERAL FUND
SCHEDULE OF REVENUES COMPARED TO BUDGET (BUDGETARY BASIS)
Year Ended June 30, 2019
(With Comparative Actual Amounts for Year Ended June 30, 2018)

	2019 Budget	2019 Actual	Variance - Positive (Negative)	2018 Actual
Revenues:				
Taxes:				
Property taxes	$ 2,215,938	$ 2,240,230	$ 24,292	$ 2,132,619
Licenses and permits:				
Business licenses	7,200	9,945	2,745	10,325
Liquor licenses	5,100	6,560	1,460	6,047
Gaming licenses	5,200	3,750	(1,450)	2,912
Marriage licenses	650	462	(188)	588
Total licenses and permits	18,150	20,717	2,567	19,872
Intergovernmental:				
Gaming tax	141,000	132,437	(8,563)	134,621
Private car line tax	4,100	2	(4,098)	3,945
Water District	7,000	2,414	(4,586)	21,597
Consolidated tax	1,337,716	1,385,248	47,532	1,304,072
Grants	28,305	66,210	37,905	43,699
Marijuana fees	88,235	88,235	-	88,235
Fish and wildlife	-	2,943	2,943	2,555
Total intergovernmental	1,606,356	1,677,489	71,133	1,598,724
Charges for services:				
Clerk fees	14,000	8,988	(5,012)	11,254
Recorder fees	50,000	43,074	(6,926)	64,079
Assessor commissions	65,500	40,008	(25,492)	30,492
Sheriff fees	2,500	6,530	4,030	7,402
Tax penalties and costs	45,000	59,542	14,542	50,533
District attorney fees	500	4,564	4,064	156
Civil fees	-	3,374	3,374	3,096
Security contract	122,000	61,000	(61,000)	122,000
Caliente police contract	75,000	64,800	(10,200)	64,800
Caliente court contract	7,000	3,850	(3,150)	3,150
Spay & neuter license plate fees	1,000	-	(1,000)	-
Total charges for services	382,500	295,730	(86,770)	356,962
Fines and forfeitures:				
Fines and forfeitures	360,000	361,968	1,968	293,668
Miscellaneous:				
Investment income	10,000	167,048	157,048	661
Rent, sales, refunds	40,000	38,654	(1,346)	46,812
Solid waste	4,000	-	(4,000)	-
Other	5,000	8,412	3,412	8,129
Total miscellaneous	59,000	214,114	155,114	55,602
Total revenues	$ 4,641,944	$ 4,810,248	$ 168,304	$ 4,457,447

LINCOLN COUNTY, NEVADA
MAJOR FUND - GENERAL FUND
SCHEDULE OF EXPENDITURES COMPARED TO BUDGET (BUDGETARY BASIS)
Year Ended June 30, 2019
(With Comparative Actual Amounts for Year Ended June 30, 2018)

	2019 Budget	2019 Actual	Variance - Positive (Negative)	2018 Actual
Expenditures:				
Current:				
General government:				
County commissioners:				
Salaries and wages	$ 111,829	$ 108,751	$ 3,078	$ 132,382
Employee benefits	81,135	63,290	17,845	89,735
Services and supplies	25,250	23,517	1,733	15,067
Total county commissioners	218,214	195,558	22,656	237,184
Executive officer:				
Salaries and wages	21,008	20,675	333	20,523
Employee benefits	11,765	12,511	(746)	11,574
Services and supplies	3,150	1,312	1,838	797
Total executive officer	35,923	34,498	1,425	32,894
Clerk:				
Salaries and wages	125,460	119,236	6,224	115,479
Employee benefits	52,748	51,388	1,360	50,139
Services and supplies	49,050	21,468	27,582	14,424
Total clerk	227,258	192,092	35,166	180,042
Treasurer:				
Salaries and wages	113,800	115,494	(1,694)	109,779
Employee benefits	50,998	50,062	936	48,253
Services and supplies	14,030	10,905	3,125	10,878
Total treasurer	178,828	176,461	2,367	168,910
Auditor and recorder:				
Salaries and wages	150,637	147,844	2,793	155,078
Employee benefits	67,118	62,164	4,954	66,821
Services and supplies	16,255	11,782	4,473	13,796
Total auditor and recorder	234,010	221,790	12,220	235,695
Assessor:				
Salaries and wages	147,346	152,866	(5,520)	142,348
Employee benefits	70,640	72,854	(2,214)	69,380
Services and supplies	24,608	10,558	14,050	12,396
Total assessor	242,594	236,278	6,316	224,124
Grant administrator:				
Salaries and wages	57,200	57,190	10	54,747
Employee benefits	20,750	20,032	718	19,478
Services and supplies	8,200	4,033	4,167	7,670
Total grant administrator	$ 86,150	$ 81,255	$ 4,895	$ 81,895

LINCOLN COUNTY, NEVADA
MAJOR FUND - GENERAL FUND
SCHEDULE OF EXPENDITURES COMPARED TO BUDGET (BUDGETARY BASIS)
Year Ended June 30, 2019
(With Comparative Actual Amounts for Year Ended June 30, 2018)

	2019 Budget	2019 Actual	Variance - Positive (Negative)	2018 Actual
General government (Continued):				
Business license:				
Salaries and wages	$ 5,887	$ 6,770	$ (883)	$ 7,361
Employee benefits	1,181	1,503	(322)	1,656
Services and supplies	1,500	898	602	1,266
Total business license	8,568	9,171	(603)	10,283
Buildings and grounds:				
Pioche:				
Salaries and wages	30,244	46,141	(15,897)	44,342
Employee benefits	8,857	9,310	(453)	8,808
Services and supplies	128,825	104,628	24,197	100,263
Total Pioche	167,926	160,079	7,847	153,413
Alamo:				
Salaries and wages	9,781	5,634	4,147	8,316
Employee benefits	1,041	588	453	884
Services and supplies	20,000	14,446	5,554	14,131
Total Alamo	30,822	20,668	10,154	23,331
Total buildings and grounds	198,748	180,747	18,001	176,744
Other general expenses:				
Employee benefits	42,000	41,059	941	51,229
Services and supplies	219,200	130,201	88,999	156,061
Total other general expenses	261,200	171,260	89,940	207,290
Total general government	$ 1,691,493	$ 1,499,110	$ 192,383	$ 1,555,061

LINCOLN COUNTY, NEVADA
MAJOR FUND - GENERAL FUND
SCHEDULE OF EXPENDITURES COMPARED TO BUDGET (BUDGETARY BASIS)
Year Ended June 30, 2019
(With Comparative Actual Amounts for Year Ended June 30, 2018)

	2019 Budget	2019 Actual	Variance - Positive (Negative)	2018 Actual
Public safety:				
Sheriff:				
Salaries and wages	$ 842,643	$ 837,160	$ 5,483	$ 830,042
Employee benefits	530,726	506,223	24,503	528,502
Services and supplies	200,468	155,051	45,417	170,678
Capital outlay	27,907	24,692	3,215	22,353
Total sheriff	1,601,744	1,523,126	78,618	1,551,575
Emergency management:				
Salaries and wages	27,374	27,374	-	35,148
Employee benefits	10,107	9,870	237	9,952
Services and supplies	5,955	265	5,690	-
Total emergency management	43,436	37,509	5,927	45,100
Caliente contract:				
Salaries and wages	94,924	86,334	8,590	78,323
Employee benefits	58,374	49,901	8,473	47,479
Services and supplies	4,600	884	3,716	1,405
Total Caliente contract	157,898	137,119	20,779	127,207
Total public safety	1,803,078	1,697,754	105,324	1,723,882
Judicial:				
District court:				
Salaries and wages	118,245	65,512	52,733	93,746
Services and supplies	218,350	237,990	(19,640)	292,195
Total district court	336,595	303,502	33,093	385,941
District attorney:				
Salaries and wages	243,885	219,371	24,514	240,539
Employee benefits	118,058	81,086	36,972	96,683
Services and supplies	20,550	17,438	3,112	43,967
Capital outlay	6,424	6,424	-	-
Total district attorney	$ 388,917	$ 324,319	$ 64,598	$ 381,189

LINCOLN COUNTY, NEVADA
MAJOR FUND - GENERAL FUND
SCHEDULE OF EXPENDITURES COMPARED TO BUDGET (BUDGETARY BASIS)
Year Ended June 30, 2019
(With Comparative Actual Amounts for Year Ended June 30, 2018)

	2019 Budget	2019 Actual	Variance - Positive (Negative)	2018 Actual
Judicial (Continued):				
Law library	$ 12,100	$ 8,306	$ 3,794	$ 7,168
Public guardian	4,750	537	4,213	1,608
Public administrator	3,250	468	2,782	19
Juvenile officers:				
Salaries and wages	63,201	68,050	(4,849)	60,963
Employee benefits	33,754	31,763	1,991	31,404
Services and supplies	20,000	6,580	13,420	12,013
Total juvenile officers	116,955	106,393	10,562	104,380
Alamo:				
Salaries and wages	143,442	127,794	15,648	145,905
Employee benefits	64,564	58,074	6,490	63,307
Services and supplies	14,750	13,429	1,321	13,286
Total Alamo	222,756	199,297	23,459	222,498
Meadow Valley:				
Salaries and wages	116,029	110,558	5,471	110,410
Employee benefits	61,133	57,528	3,605	58,581
Services and supplies	19,300	11,773	7,527	10,742
Total Meadow Valley	196,462	179,859	16,603	179,733
Total judicial	1,281,785	1,122,681	159,104	1,282,536
Health:				
State nurse	56,552	52,387	4,165	52,388
Animal control	1,000	-	1,000	-
Total health	57,552	52,387	5,165	52,388
Contingency	-	-	-	-
Total expenditures	$ 4,833,908	$ 4,371,932	$ 461,976	$ 4,613,867

LINCOLN COUNTY, NEVADA
MAJOR FUND - ROAD SPECIAL REVENUE FUND
COMPARATIVE BALANCE SHEETS
June 30, 2019 and 2018

	2019	2018
ASSETS		
Pooled cash and investments	$ 541,005	$ 493,759
Interest receivable	1,143	821
Due from other governments	438,509	296,386
Total assets	$ 980,657	$ 790,966
LIABILITIES		
Accounts payable	$ 60,064	$ 109,070
Accrued payroll and benefits	45,319	45,056
Total liabilities	105,383	154,126
FUND BALANCE		
Restricted	875,274	636,840
Total liabilities and fund balance	$ 980,657	$ 790,966

LINCOLN COUNTY, NEVADA
MAJOR FUND - ROAD SPECIAL REVENUE FUND
SCHEDULE OF REVENUES, EXPENDITURES, AND CHANGES IN FUND BALANCE - BUDGET (GAAP BASIS) AND ACTUAL
Year Ended June 30, 2019
(With Comparative Actual Amounts for Year Ended June 30, 2018)

	2019 Budget	2019 Actual	Variance - Positive (Negative)	2018 Actual
Revenues:				
Intergovernmental:				
Gasoline tax $2.35	$ 1,062,774	$ 1,047,520	$ (15,254)	$ 1,043,384
Gasoline tax $1.25	611,160	603,047	(8,113)	600,847
Gasoline tax $1.75	47,766	49,190	1,424	48,152
Optional $0.01 tax	23,176	23,804	628	23,344
National forest	-	15,140	15,140	21,230
Total intergovernmental	1,744,876	1,738,701	(6,175)	1,736,957
Miscellaneous:				
Investment income	800	10,080	9,280	170
Other	15,000	-	(15,000)	-
Total miscellaneous	15,800	10,080	(5,720)	170
Total revenues	1,760,676	1,748,781	(11,895)	1,737,127
Expenditures:				
Current:				
Public works:				
Highways and streets:				
Salaries and wages	684,583	625,336	59,247	659,012
Employee benefits	355,183	271,964	83,219	278,285
Services and supplies	801,700	513,047	288,653	465,294
Capital outlay	-	-	-	2,500
Total expenditures	1,841,466	1,410,347	431,119	1,405,091
Excess (deficiency) of revenues over expenditures	(80,790)	338,434	419,224	332,036
Other financing sources (uses):				
Operating transfers out	(100,000)	(100,000)	-	(100,000)
Net change in fund balance	(180,790)	238,434	419,224	232,036
Fund balance:				
Beginning of year	257,650	636,840	379,190	404,804
End of year	$ 76,860	$ 875,274	$ 798,414	$ 636,840

LINCOLN COUNTY, NEVADA
MAJOR FUND - FEDERAL IN LIEU TAX SPECIAL REVENUE FUND
COMPARATIVE BALANCE SHEETS
June 30, 2019 and 2018

	2019	2018
ASSETS		
Pooled cash and investments	$ 2,149,537	$ 2,182,955
Interest receivable	4,751	8,816
Due from other governments	-	57,609
Total assets	$ 2,154,288	$ 2,249,380
LIABILITIES		
Accounts payable	$ 25,460	$ 165,588
FUND BALANCE		
Committed	2,128,828	2,083,792
Total liabilities and fund balance	$ 2,154,288	$ 2,249,380

LINCOLN COUNTY, NEVADA
MAJOR FUND - FEDERAL IN LIEU TAX SPECIAL REVENUE FUND
SCHEDULE OF REVENUES, EXPENDITURES, AND CHANGES
IN FUND BALANCE - BUDGET (GAAP BASIS) AND ACTUAL
Year Ended June 30, 2019
(With Comparative Actual Amounts for Year Ended June 30, 2018)

	2019 Budget	2019 Actual	Variance - Positive (Negative)	2018 Actual
Revenues:				
Intergovernmental:				
Federal in lieu tax	$ 893,189	$ 932,088	$ 38,899	$ 1,804,715
Grants	-	6,978	6,978	57,609
Total intergovernmental	893,189	939,066	45,877	1,862,324
Miscellaneous:				
Investment income	5,000	41,902	36,902	1,826
Total revenues	898,189	980,968	82,779	1,864,150
Expenditures:				
Current:				
General government:				
Service and supplies	955,426	500,284	455,142	416,621
Capital outlay	364,500	33,018	331,482	310,024
Total general government	1,319,926	533,302	786,624	726,645
Public safety:				
Service and supplies	74,500	52,533	21,967	45,046
Capital outlay	34,400	-	34,400	-
Total public safety	108,900	52,533	56,367	45,046
Welfare:				
Capital outlay	12,000	-	12,000	-
Community support:				
Service and supplies	16,957	16,602	355	16,957
Intergovernmental:				
Service and supplies	80,000	83,755	(3,755)	70,484
Debt service:				
Principal	50,641	50,641	-	47,699
Interest	1,948	1,935	13	4,877
Total debt service	52,589	52,576	13	52,576
Total expenditures	$ 1,590,372	$ 738,768	$ 851,604	$ 911,708

LINCOLN COUNTY, NEVADA
MAJOR FUND - FEDERAL IN LIEU TAX SPECIAL REVENUE FUND
SCHEDULE OF REVENUES, EXPENDITURES, AND CHANGES
IN FUND BALANCE - BUDGET (GAAP BASIS) AND ACTUAL
Year Ended June 30, 2019
(With Comparative Actual Amounts for Year Ended June 30, 2018)

	2019		Variance - Positive	2018
	Budget	Actual	(Negative)	Actual
Excess (deficiency) of revenues over expenditures	$ (692,183)	$ 242,200	$ 934,383	$ 952,442
Other financing sources (uses):				
Operating transfers out	(175,000)	(197,164)	(22,164)	(640,209)
Net change in fund balance	(867,183)	45,036	912,219	312,233
Fund balance:				
Beginning of year	1,054,700	2,083,792	1,029,092	1,771,559
End of year	$ 187,517	$ 2,128,828	$ 1,941,311	$ 2,083,792

LINCOLN COUNTY, NEVADA
MAJOR FUND - LINCOLN COUNTY WATER DISTRICT
WATER RESOURCES SPECIAL REVENUE FUND
COMPARATIVE BALANCE SHEETS
June 30, 2019 and 2018

	2019	2018
ASSETS		
Pooled cash and investments	$ 2,828,036	$ 2,724,053
Interest receivable	13,174	9,362
Total assets	$ 2,841,210	$ 2,733,415
LIABILITIES		
Accounts payable	$ -	$ -
FUND BALANCE		
Committed	2,841,210	2,733,415
Total liabilities and fund balance	$ 2,841,210	$ 2,733,415

LINCOLN COUNTY, NEVADA
MAJOR FUND - LINCOLN COUNTY WATER DISTRICT
WATER RESOURCES SPECIAL REVENUE FUND
SCHEDULE OF REVENUES, EXPENDITURES, AND CHANGES IN FUND BALANCE - BUDGET (GAAP BASIS) AND ACTUAL
Year Ended June 30, 2019
(With Comparative Actual Amounts for Year Ended June 30, 2018)

	2019			
	Budget	Actual	Variance - Positive (Negative)	2018 Actual
Revenues:				
Miscellaneous:				
Investment income	$ 500	$ 107,795	$ 107,295	$ (8,297)
Expenditures:				
Current:				
General government:				
Services and supplies	1,356,441	-	1,356,441	-
Excess (deficiency) of revenues over expenditures	(1,355,941)	107,795	1,463,736	(8,297)
Other financing sources (uses):				
Operating transfers out	-	-	-	(100,000)
Net change in fund balance	(1,355,941)	107,795	1,463,736	(108,297)
Fund balance:				
Beginning of year	1,355,941	2,733,415	1,377,474	2,841,712
End of year	$ -	$ 2,841,210	$ 2,841,210	$ 2,733,415

LINCOLN COUNTY, NEVADA
MAJOR FUND - LINCOLN COUNTY LAND ACT - SPECIAL USE SPECIAL REVENUE FUND
COMPARATIVE BALANCE SHEETS
June 30, 2019 and 2018

	2019	2018
ASSETS		
Pooled cash and investments	$ 3,671,992	$ 3,562,405
Interest receivable	8,055	6,319
Interfund receivable	180,000	190,000
Total assets	$ 3,860,047	$ 3,758,724
LIABILITIES		
Accounts payable	$ -	$ -
FUND BALANCE		
Committed	3,860,047	3,758,724
Total liabilities and fund balance	$ 3,860,047	$ 3,758,724

LINCOLN COUNTY, NEVADA
MAJOR FUND - LINCOLN COUNTY LAND ACT - SPECIAL USE SPECIAL REVENUE FUND
SCHEDULE OF REVENUES, EXPENDITURES, AND CHANGES
IN FUND BALANCE - BUDGET (GAAP BASIS) AND ACTUAL
Year Ended June 30, 2019
(With Comparative Actual Amounts for Year Ended June 30, 2018)

	2019 Budget	2019 Actual	Variance - Positive (Negative)	2018 Actual
Revenues:				
Miscellaneous:				
Investment income	$ 6,000	$ 71,047	$ 65,047	$ 1,308
Rent	30,000	30,276	276	30,276
Total miscellaneous	36,000	101,323	65,323	31,584
Expenditures:				
Current:				
General government:				
Service and supplies	250,000	-	250,000	-
Excess (deficiency) of revenues over expenditures	(214,000)	101,323	315,323	31,584
Fund balance:				
Beginning of year	3,507,440	3,758,724	251,284	$ 3,727,140
End of year	$ 3,293,440	$ 3,860,047	$ 566,607	$ 3,758,724

LINCOLN COUNTY, NEVADA
MAJOR FUND - COUNTY GRANT SPECIAL REVENUE FUND
COMPARATIVE BALANCE SHEETS
June 30, 2019 and 2018

	2019	2018
ASSETS		
Pooled cash and investments	$ 46,967	$ 102,369
Interest receivable	114	561
Due from other governments	257,043	479,664
Total assets	$ 304,124	$ 582,594
LIABILITIES		
Accounts payable	$ 56,857	$ 338,719
Accrued payroll and benefits	14,643	14,813
Unearned revenue	168,479	165,920
Total liabilities	239,979	519,452
FUND BALANCE		
Committed	64,145	63,142
Total liabilities and fund balance	$ 304,124	$ 582,594

LINCOLN COUNTY, NEVADA
MAJOR FUND - COUNTY GRANT SPECIAL REVENUE FUND
SCHEDULE OF REVENUES, EXPENDITURES, AND CHANGES IN FUND BALANCE - BUDGET (GAAP BASIS) AND ACTUAL
Year Ended June 30, 2019
(With Comparative Actual Amounts for Year Ended June 30, 2018)

	2019 Budget	2019 Actual	Variance - Positive (Negative)	2018 Actual
Revenues:				
Intergovernmental:				
Grants	$ 1,296,187	$ 1,119,155	$ (177,032)	$ 2,597,521
Miscellaneous:				
Investment income	-	1,003	1,003	116
Total revenues	1,296,187	1,120,158	(176,029)	2,597,637
Expenditures:				
Current:				
General government	370,257	340,665	29,592	418,792
Public safety	229,981	190,166	39,815	327,447
Public works	471,168	468,671	2,497	1,268,488
Welfare	128,982	111,335	17,647	100,949
Culture and recreation	95,799	17,292	78,507	560,607
Total expenditures	1,296,187	1,128,129	168,058	2,676,283
Excess (deficiency) of revenues over expenditures	-	(7,971)	(7,971)	(78,646)
Other financing sources (uses):				
Operating transfers in	-	8,974	8,974	78,762
Net change in fund balance	-	1,003	1,003	116
Fund balance:				
Beginning of year	-	63,142	63,142	63,026
End of year	$ -	$ 64,145	$ 64,145	$ 63,142

LINCOLN COUNTY, NEVADA
MAJOR FUND - DETENTION CENTER ENTERPRISE FUND
STATEMENT OF NET POSITION
JUNE 30, 2019 and 2018

	2019	2018
ASSETS		
Current assets:		
Pooled cash and investments	$ 134,754	$ -
Accounts receivable	160,804	318,676
Total current assets	295,558	318,676
Capital assets:		
Property, plant and equipment (net of depreciation)	831,505	876,813
Total assets	1,127,063	1,195,489
DEFERRED OUTFLOWS OF RESOURCES		
Deferred pension charge	419,985	427,920
LIABILITIES		
Current liabilities:		
Accounts payable	21,865	25,541
Accrued payroll and benefits	131,636	123,811
Due to other funds	-	89,535
Accrued compensated absences	111,415	120,471
Total current liabilities	264,916	359,358
Non-current liabilities:		
Accrued compensated absences	65,250	72,283
Net pension liability	3,247,750	3,236,339
Total non-current liabilities	3,313,000	3,308,622
Total liabilities	3,577,916	3,667,980
DEFERRED INFLOWS OF RESOURCES		
Deferred pension charge	278,397	315,194
NET POSITION		
Invested in capital assets, net of related debt	831,505	876,813
Unrestricted	(3,140,770)	(3,236,578)
Total net position	$ (2,309,265)	$ (2,359,765)

LINCOLN COUNTY, NEVADA
MAJOR FUND - DETENTION CENTER ENTERPRISE FUND
SCHEDULE OF REVENUES, EXPENSES, AND CHANGES IN NET POSITION - BUDGET (GAAP BASIS) AND ACTUAL
Year Ended June 30, 2019
(With Comparative Actual Amounts for Year Ended June 30, 2018)

	2019 Budget	2019 Actual	Variance - Positive (Negative)	2018 Actual
Revenues:				
Charges for services:				
Inmate fees	$ 1,779,375	$ 1,867,300	$ 87,925	$ 1,875,382
Operating expenses:				
Public safety:				
Salaries and wages	968,150	980,005	(11,855)	1,002,794
Employee benefits	595,555	508,390	87,165	600,602
Services and supplies	313,304	380,597	(67,293)	345,908
Depreciation	65,000	45,308	19,692	43,418
Total operating expenses	1,942,009	1,914,300	27,709	1,992,722
Operating income (loss)	(162,634)	(47,000)	115,634	(117,340)
Non-operating revenues (expenses):				
Operating transfers in	97,500	97,500	-	21,820
Changes in net position	$ (65,134)	50,500	$ 115,634	(95,520)
Net position:				
Beginning of year		(2,359,765)		(2,264,245)
End of year		$ (2,309,265)		$ (2,359,765)

LINCOLN COUNTY, NEVADA
MAJOR FUND - DETENTION CENTER ENTERPRISE FUND
COMPARATIVE STATEMENT OF CASH FLOWS
June 30, 2019 and 2018

	2019	2018
Cash flows from operating activities:		
Cash received from customers	$ 2,025,172	$ 1,742,295
Cash paid for services and supplies	(384,273)	(369,410)
Cash paid for salaries and benefits	(1,514,110)	(1,522,554)
Net cash provided (used) by operating activities	126,789	(149,669)
Cash flows from noncapital financing activities:		
Due to other funds	(89,535)	89,535
Operating transfers in	97,500	21,820
Net cash provided (used) by noncapital financing activities	7,965	111,355
Cash flows from capital and related financing activities:		
Purchases of capital assets	-	(21,820)
Net change in cash and cash equivalents	134,754	(60,134)
Cash:		
Beginning of year	-	60,134
End of year	$ 134,754	$ -
Reconciliation of operating income (loss) to net cash provided (used) by operating activities:		
Operating income (loss)	$ (47,000)	$ (117,340)
Adjustments to reconcile operating income (loss) to net cash provided (used) by operating activities:		
Depreciation expense	45,308	43,418
(Increase) decrease in accounts receivables	157,872	(133,087)
Increase (decrease) in accounts payable	(3,676)	(23,502)
Increase (decrease) in accrued payroll and benefits	7,825	54,357
Increase (decrease) in compensated absences	(16,089)	(2,959)
Increase (decrease) in net pension liability	11,411	(173,593)
Increase (decrease) in net pension expense	(28,862)	203,037
Total adjustments	173,789	(32,329)
Net cash provided (used) by operating activities	$ 126,789	$ (149,669)

LINCOLN COUNTY, NEVADA
MAJOR PIOCHE PUBLIC UTILITY ELECTRIC ENTERPRISE FUND
COMPARATIVE STATEMENT OF NET POSITION
June 30, 2019 and 2018

	2019	2018
ASSETS		
Current assets:		
Pooled cash and investments	$ 383,369	$ 295,950
Accounts receivable	55,115	49,744
Interest receivable	268	165
Total current assets	438,752	345,859
Capital assets:		
Land	2,000	2,000
Property, plant and equipment (net of depreciation)	194,434	174,285
Total capital assets	196,434	176,285
Total assets	635,186	522,144
DEFERRED OUTFLOWS OF RESOURCES		
Deferred pension charge	20,745	21,064
Deferred OPEB	1,762	1,762
Total deferred outflows of resources	22,507	22,826
LIABILITIES		
Current liabilities:		
Accounts payable	32,977	43,708
Accrued payroll and benefits	5,090	5,490
Customer deposits	8,030	6,610
Accrued compensated absences	7,180	7,014
Total current liabilities	53,277	62,822
Non-current liabilities:		
Accrued compensated absences	4,450	4,347
Net pension liability	132,110	131,611
OPEB liability	31,232	30,930
Total non-current liabilities	167,792	166,888
Total liabilities	221,069	229,710
DEFERRED INFLOWS OF RESOURCES		
Deferred pension charge	14,042	15,302
NET POSITION		
Invested in capital assets, net of related debt	196,434	176,285
Unrestricted	226,148	123,673
Total net position	$ 422,582	$ 299,958

LINCOLN COUNTY, NEVADA
MAJOR PIOCHE PUBLIC UTILITY ELECTRIC ENTERPRISE FUND
SCHEDULE OF REVENUES, EXPENSES, AND CHANGES IN NET POSITION - BUDGET (GAAP BASIS) AND ACTUAL
Year Ended June 30, 2019
(With Comparative Actual Amounts for Year Ended June 30, 2018)

	2019 Budget	2019 Actual	Variance-Positive (Negative)	2018 Actual
Operating revenues:				
Electricity	$ 767,500	$ 794,658	$ 27,158	$ 693,380
Operating expenses:				
Electricity:				
Salaries and wages	97,377	73,023	24,354	65,173
Employee benefits	46,674	35,605	11,069	32,421
Services and supplies	590,854	620,444	(29,590)	587,871
Depreciation	40,000	26,221	13,779	21,848
Total operating expenses	774,905	755,293	19,612	707,313
Operating income (loss)	(7,405)	39,365	46,770	(13,933)
Non-operating revenues (expenses):				
Investment income	-	2,360	2,360	34
Electricity capital fees	60,000	66,361	6,361	57,123
Electricity custom fees	5,000	14,538	9,538	14,478
Total non-operating revenues (expenses)	65,000	83,259	18,259	71,635
Change in net position	$ 57,595	122,624	$ 65,029	57,702
Net Position:				
Beginning of year		299,958		242,256
End of year		$ 422,582		$ 299,958

LINCOLN COUNTY, NEVADA
MAJOR PIOCHE PUBLIC UTILITY ELECTRIC ENTERPRISE FUND
COMPARATIVE STATEMENT OF CASH FLOWS
June 30, 2019 and 2018

	2019	2018
Cash flows from operating activities:		
Cash received from customers	$ 790,707	$ 706,676
Cash paid for services and supplies	(631,175)	(594,519)
Cash paid for salaries and benefits	(108,899)	(95,966)
Net cash provided (used) by operating activities	50,633	16,191
Cash flows from capital and related financing activities:		
Purchases of capital assets	(46,370)	-
Capital fees	66,361	57,123
Custom fees	14,538	14,478
Net cash provided (used) by capital and related financing activities	34,529	71,601
Cash flows from investing activities:		
Investment income	2,257	(24)
Net change in cash and cash equivalents	87,419	87,768
Cash:		
Beginning of year	295,950	208,182
End of year	$ 383,369	$ 295,950
Reconciliation of operating income (loss) to net cash provided (used) by operating activities:		
Operating income (loss)	$ 39,365	$ (13,933)
Adjustments to reconcile operating income (loss) to net cash provided (used) by operating activities:		
Depreciation expense	26,221	21,848
(Increase) decrease in accounts receivable	(5,371)	11,016
Increase (decrease) in accounts payable	(10,731)	(6,648)
Increase (decrease) in accrued payroll and benefits	(400)	443
Increase (decrease) in compensated absences	269	(520)
Increase (decrease) in net pension liability	499	(6,996)
Increase (decrease) in net pension expense	(941)	8,136
Increase (decrease) in OPEB liability	302	30,930
Increase (decrease) in OPEB pension expense	-	(30,365)
Increase (decrease) in customer deposits	1,420	2,280
Total adjustments	11,268	30,124
Net cash provided (used) by operating activities	$ 50,633	$ 16,191

LINCOLN COUNTY, NEVADA
MAJOR SOLID WASTE ENTERPRISE FUND
STATEMENT OF NET POSITION
June 30, 2019

	2019	2018
ASSETS		
Current assets:		
Pooled cash and investments	$ 559,621	$ 446,861
Accounts receivable	142,054	144,690
Interest receivable	133	72
Restricted assets:		
Pooled cash and investments	61,118	40,005
Capital assets:		
Land	200,000	200,000
Property and equipment (net of depreciation)	388,088	405,108
Total assets	1,351,014	1,236,736
DEFERRED OUTFLOWS OF RESOURCES		
Deferred pension charge	42,641	31,966
LIABILITIES		
Current liabilities:		
Accounts payable	10,560	17,397
Accrued payroll and benefits	15,845	15,410
Accrued compensated absences	8,445	11,432
Interfund payable	20,000	20,000
Total current liabilities	54,850	64,239
Non-current liabilities:		
Landfill closure and postclosure costs	60,000	40,000
Interfund payable	340,000	360,000
Accrued compensated absences	5,697	7,621
Net pension liability	-	472
Total non-current liabilities	405,697	408,093
Total liabilities	460,547	472,332
DEFERRED INFLOWS OF RESOURCES		
Deferred pension charge	27,654	18,877
NET POSITION		
Invested in capital assets, net of related debt	588,088	605,108
Unrestricted	317,366	172,385
Total net position	$ 905,454	$ 777,493

LINCOLN COUNTY, NEVADA
MAJOR SOLID WASTE ENTERPRISE FUND
SCHEDULE OF REVENUES, EXPENSES, AND CHANGES IN NET POSITION -
BUDGET (GAAP BASIS) AND ACTUAL
Year Ended June 30, 2019
(With Comparative Actual Amounts for Year Ended June 30, 2018)

	2019 Budget	2019 Actual	Variance-Positive (Negative)	2018 Actual
Operating revenues:				
Charges for services	$ 605,000	$ 638,124	$ 33,124	$ 766,005
Operating expenses:				
Sanitation:				
Salaries and wages	223,320	231,487	(8,167)	240,459
Employee benefits	92,697	82,873	9,824	83,871
Service and supplies	200,500	131,808	68,692	120,382
Closure and postclosure landfill costs	20,000	20,000	-	20,000
Bad debt expense	-	-	-	40,000
Depreciation	30,000	45,169	(15,169)	41,926
Total operating expenses	566,517	511,337	55,180	546,638
Operating income (loss)	38,483	126,787	88,304	219,367
Non-operating revenues (expenses):				
Investment income	-	1,174	1,174	15
Operating transfers in	-	-	-	175,151
Total non-operating revenues (expenses)	-	1,174	1,174	175,166
Change in net position	$ 38,483	127,961	89,478	394,533
Net Position:				
Beginning of year		777,493		382,960
End of year		$ 905,454		$ 777,493

LINCOLN COUNTY, NEVADA
MAJOR SOLID WASTE ENTERPRISE FUND
STATEMENT OF CASH FLOWS
Year Ended June 30, 2019

	2019	2018
Cash flows from operating activities:		
Cash received from customers	$ 640,760	$ 581,599
Cash paid for services and supplies	(138,645)	(117,587)
Cash paid for salaries and benefits	(321,206)	(308,808)
Net cash provided (used) by operating activities	180,909	155,204
Cash flows from noncapital financing activities:		
Operating transfers in/out	-	175,151
Cash flows from capital and related financing activities:		
Purchases of capital assets	(28,149)	(206,398)
Interfund payable	(20,000)	(20,000)
Net cash provided by investing activities	(48,149)	(226,398)
Cash flows from investing activities:		
Investment income	1,113	(10)
Net change in cash and cash equivalents	133,873	103,947
Cash:		
Beginning of year	486,866	382,919
End of year	$ 620,739	$ 486,866
Reconciliation of operating income to net cash provided (used) by operating activities:		
Operating income (loss)	$ 126,787	$ 219,367
Adjustments to reconcile operating income to net cash provided (used) by operating activities:		
Depreciation expense	45,169	41,926
Bad debt expense	-	40,000
(Increase) decrease in accounts receivable	2,636	(184,406)
Increase (decrease) in accounts payable	(6,837)	2,795
Increase (decrease) in accrued payroll and benefits	435	1,044
Increase (decrease) in compensated absences	(4,911)	19,053
Increase (decrease) in land fill closure	20,000	20,000
Increase (decrease) in net pension liability	(472)	(10,264)
Increase (decrease) in net pension expense	(1,898)	5,689
Total adjustments	54,122	(64,163)
Net cash provided (used) by operating activities	$ 180,909	$ 155,204

LINCOLN COUNTY, NEVADA
NONMAJOR SPECIAL REVENUE FUNDS
COMBINING BALANCE SHEET
June 30, 2019
(With Comparative Totals for June 30, 2018)

	Pioche Town	Alamo Town	Panaca Town	Resource Development Authority	County Library
ASSETS					
Pooled cash and investments	$ 180,251	$ 80,197	$ 16,465	$ 87,564	$ 63,313
Interest receivable	367	134	31	-	-
Taxes receivable	1,126	597	307	-	1,438
Due from other governments	9,852	4,101	7,398	-	-
Due from others	-	-	-	-	-
Prepaid expense	-	-	-	-	-
Interfund receivable	-	-	-	-	-
Total assets	$ 191,596	$ 85,029	$ 24,201	$ 87,564	$ 64,751
LIABILITIES					
Accounts payable	$ 6,802	$ 5,655	$ 1,895	$ 9,291	$ 1,419
Accrued payroll and benefits	3,715	573	189	-	3,243
Unearned revenue	-	-	-	78,273	-
Total liabilities	10,517	6,228	2,084	87,564	4,662
DEFERRED INFLOWS OF RESOURCES					
Unavailable revenue - property taxes	1,120	598	260	-	1,137
FUND BALANCE					
Nonspendable	-	-	-	-	-
Restricted for:					
Unincorporated towns	179,959	78,203	21,857	-	-
Multi-species conservation	-	-	-	-	-
General government	-	-	-	-	-
Public safety	-	-	-	-	-
Judicial	-	-	-	-	-
Public works	-	-	-	-	-
Health	-	-	-	-	-
Welfare	-	-	-	-	-
Culture and recreation	-	-	-	-	58,952
Community support	-	-	-	-	-
Intergovernmental	-	-	-	-	-
Committed for:					
Land act	-	-	-	-	-
Water	-	-	-	-	-
Lincoln County Water District	-	-	-	-	-
General government	-	-	-	-	-
Health	-	-	-	-	-
Unassigned	-	-	-	-	-
Total fund balance	179,959	78,203	21,857	-	58,952
Total liabilities, deferred inflows of resources, and fund balance	$ 191,596	$ 85,029	$ 24,201	$ 87,564	$ 64,751

Museum	Senior Nutrition	Transportation	Agricultural Extension	Indigent	Medical Indigent
$ 70,536	$ 47,466	$ 177,516	$ 28,503	$ 378,913	$ 414,480
-	-	-	-	-	930
731	1,760	-	342	1,231	2,742
-	25,493	9,375	-	-	-
-	-	-	-	-	-
-	-	-	-	-	-
-	-	-	-	-	-
$ 71,267	$ 74,719	$ 186,891	$ 28,845	$ 380,144	$ 418,152
$ 241	$ 10,692	$ 7,324	$ 483	$ 15,178	$ 17,855
2,555	6,144	3,959	662	3,867	-
-	-	-	-	-	-
2,796	16,836	11,283	1,145	19,045	17,855
579	1,395	-	272	977	2,177
-	-	-	-	-	-
-	-	-	-	-	-
-	-	-	-	-	-
-	-	-	-	-	-
-	-	-	-	-	-
-	-	-	-	-	-
-	-	-	-	-	-
-	56,488	-	-	360,122	398,120
67,892	-	-	-	-	-
-	-	175,608	27,428	-	-
-	-	-	-	-	-
-	-	-	-	-	-
-	-	-	-	-	-
-	-	-	-	-	-
-	-	-	-	-	-
-	-	-	-	-	-
-	-	-	-	-	-
67,892	56,488	175,608	27,428	360,122	398,120
$ 71,267	$ 74,719	$ 186,891	$ 28,845	$ 380,144	$ 418,152

LINCOLN COUNTY, NEVADA
NONMAJOR SPECIAL REVENUE FUNDS
COMBINING BALANCE SHEET
June 30, 2019
(With Comparative Totals for June 30, 2018)

	China Springs	Ambulance	Regional Streets and Highways	Room Tax	Legal Aid Services
ASSETS					
Pooled cash and investments	$ 1,422	$ 27,537	$ 641,915	$ 92,393	$ 577
Interest receivable	-	29	1,233	-	-
Taxes receivable	144	-	-	9,413	-
Due from other governments	2	-	32,939	-	-
Due from others	-	-	-	-	-
Prepaid expense	-	-	-	-	-
Interfund receivable	-	-	-	-	-
Total assets	$ 1,568	$ 27,566	$ 676,087	$ 101,806	$ 577
LIABILITIES					
Accounts payable	$ -	$ 2,748	$ 5,750	$ 3,384	$ 770
Accrued payroll and benefits	-	1,150	63	438	-
Unearned revenue	-	-	-	-	-
Total liabilities	-	3,898	5,813	3,822	770
DEFERRED INFLOWS OF RESOURCES					
Unavailable revenue - property taxes	114	-	-	-	-
FUND BALANCE					
Nonspendable	-	-	-	-	-
Restricted for:					
Unincorporated towns	-	-	-	-	-
Multi-species conservation	-	-	-	-	-
General government	-	-	-	-	-
Public safety	-	-	-	-	-
Judicial	-	-	-	-	(193)
Public works	-	-	670,274	-	-
Health	-	-	-	-	-
Welfare	-	-	-	-	-
Culture and recreation	-	-	-	97,984	-
Community support	-	-	-	-	-
Intergovernmental	1,454	-	-	-	-
Committed for:					
Land act	-	-	-	-	-
Water	-	-	-	-	-
Lincoln County Water District	-	-	-	-	-
General government	-	-	-	-	-
Health	-	23,668	-	-	-
Unassigned	-	-	-	-	-
Total fund balance	1,454	23,668	670,274	97,984	(193)
Total liabilities, deferred inflows of resources, and fund balance	$ 1,568	$ 27,566	$ 676,087	$ 101,806	$ 577

Forensic Services	Administrative Assessment	Forfeiture	Recorder Technology	L. C. Housing Authority
$ 8,628	$ 110,998	$ 51,215	$ 23,444	$ 20,496
-	219	120	46	44
-	-	-	-	-
-	-	-	-	-
-	-	-	-	-
-	-	-	-	-
-	-	-	-	-
$ 8,628	$ 111,217	$ 51,335	$ 23,490	$ 20,540
$ 125	$ 100	$ -	$ -	$ 521
-	-	-	-	205
-	-	-	-	-
125	100	-	-	726
-	-	-	-	-
-	-	-	-	-
-	-	-	-	-
-	-	-	23,490	-
8,503	-	51,335	-	-
-	111,117	-	-	-
-	-	-	-	-
-	-	-	-	-
-	-	-	-	-
-	-	-	-	-
-	-	-	-	19,814
-	-	-	-	-
-	-	-	-	-
-	-	-	-	-
-	-	-	-	-
-	-	-	-	-
-	-	-	-	-
-	-	-	-	-
8,503	111,117	51,335	23,490	19,814
$ 8,628	$ 111,217	$ 51,335	$ 23,490	$ 20,540

LINCOLN COUNTY, NEVADA
NONMAJOR SPECIAL REVENUE FUNDS
COMBINING BALANCE SHEET
June 30, 2019
(With Comparative Totals for June 30, 2018)

	Alamo Clinic	Fair Board	Multi-Species Habitat Conservation	Multi-Species Habitat Conservation Section 7	Youth Activities Counsel
ASSETS					
Pooled cash and investments	$ 10,982	$ 19,773	$ 16,909	$ 877,978	$ 6,007
Interest receivable	-	25	40	1,930	-
Taxes receivable	1,455	-	-	-	-
Due from other governments	-	-	-	-	-
Due from others	-	-	-	-	-
Prepaid expense	-	-	-	-	-
Interfund receivable	-	-	-	-	-
Total assets	$ 12,437	$ 19,798	$ 16,949	$ 879,908	$ 6,007
LIABILITIES					
Accounts payable	$ 10,787	$ -	$ 621	$ -	$ -
Accrued payroll and benefits	-	-	-	-	-
Unearned revenue	-	-	16,328	-	-
Total liabilities	10,787	-	16,949	-	-
DEFERRED INFLOWS OF RESOURCES					
Unavailable revenue - property taxes	1,154	-	-	-	-
FUND BALANCE					
Nonspendable	-	-	-	-	-
Restricted for:					
Unincorporated towns	-	-	-	-	-
Multi-species conservation	-	-	-	879,908	-
General government	-	-	-	-	-
Public safety	-	-	-	-	-
Judicial	-	-	-	-	-
Public works	-	-	-	-	-
Health	496	-	-	-	-
Welfare	-	-	-	-	-
Culture and recreation	-	19,798	-	-	-
Community support	-	-	-	-	6,007
Intergovernmental	-	-	-	-	-
Committed for:					
Land act	-	-	-	-	-
Water	-	-	-	-	-
Lincoln County Water District	-	-	-	-	-
General government	-	-	-	-	-
Health	-	-	-	-	-
Unassigned	-	-	-	-	-
Total fund balance	496	19,798	-	879,908	6,007
Total liabilities, deferred inflows of resources, and fund balance	$ 12,437	$ 19,798	$ 16,949	$ 879,908	$ 6,007

Genetic Marker Testing	Public Improvement	Airport	Panaca Town Building	Court Facility Fees	Tri County Weed Control
$ 4,285	$ 145,081	$ 1,036	$ 56,265	$ 111,466	$ 249,082
-	319	-	116	214	646
-	-	-	-	-	-
-	-	-	-	-	-
-	-	-	-	-	-
-	-	-	-	-	-
-	-	-	-	-	-
$ 4,285	$ 145,400	$ 1,036	$ 56,381	$ 111,680	$ 249,728
$ 4,285	$ -	$ 514	$ -	$ -	$ 56,390
-	-	-	-	-	21,339
-	-	-	-	-	-
4,285	-	514	-	-	77,729
-	-	-	-	-	-
-	-	-	-	-	-
-	-	-	-	-	-
-	-	-	-	-	-
-	-	-	-	-	171,999
-	-	-	-	-	-
-	-	-	-	111,680	-
-	145,400	-	-	-	-
-	-	-	-	-	-
-	-	-	-	-	-
-	-	-	-	-	-
-	-	-	-	-	-
-	-	-	-	-	-
-	-	-	-	-	-
-	-	-	56,381	-	-
-	-	-	-	-	-
-	-	522	-	-	-
-	145,400	522	56,381	111,680	171,999
$ 4,285	$ 145,400	$ 1,036	$ 56,381	$ 111,680	$ 249,728

LINCOLN COUNTY, NEVADA
NONMAJOR SPECIAL REVENUE FUNDS
COMBINING BALANCE SHEET
June 30, 2019
(With Comparative Totals for June 30, 2018)

	Lincoln County Land Act General	Lincoln County Land Act Planning and Development	Lincoln County Land Act Education	Lincoln County Land Act Grant Match	Lincoln County Water General
ASSETS					
Pooled cash and investments	$ 6,693	$ 681	$ 126,986	$ 151	$ 616
Interest receivable	15	2	279	-	2
Taxes receivable	-	-	-	-	-
Due from other governments	-	-	-	-	-
Due from others	-	-	-	-	-
Prepaid expense	-	-	-	-	-
Interfund receivable	-	-	-	-	-
Total assets	$ 6,708	$ 683	$ 127,265	$ 151	$ 618
LIABILITIES					
Accounts payable	$ -	$ -	$ -	$ -	$ -
Accrued payroll and benefits	-	-	-	-	-
Unearned revenue	-	-	-	-	-
Total liabilities	-	-	-	-	-
DEFERRED INFLOWS OF RESOURCES					
Unavailable revenue - property taxes	-	-	-	-	-
FUND BALANCE					
Nonspendable	-	-	-	-	-
Restricted for:					
Unincorporated towns	-	-	-	-	-
Multi-species conservation	-	-	-	-	-
General government	-	-	-	-	-
Public safety	-	-	-	-	-
Judicial	-	-	-	-	-
Public works	-	-	-	-	-
Health	-	-	-	-	-
Welfare	-	-	-	-	-
Culture and recreation	-	-	-	-	-
Community support	-	-	-	-	-
Intergovernmental	-	-	-	-	-
Committed for:					
Land act	6,708	683	127,265	151	-
Water	-	-	-	-	618
Lincoln County Water District	-	-	-	-	-
General government	-	-	-	-	-
Health	-	-	-	-	-
Unassigned	-	-	-	-	-
Total fund balance	6,708	683	127,265	151	618
Total liabilities, deferred inflows of resources, and fund balance	$ 6,708	$ 683	$ 127,265	$ 151	$ 618

Lincoln County Water Special Projects	Lincoln County Water Planning and Development	Lincoln County Water Special Use	Lincoln County Water Grant Match	Lincoln County Water District General	Lincoln County Water District Plan & Dev
$ 8,546	$ 84,771	$ 1,196,429	$ 84,707	$ 295,924	$ 902,932
19	186	2,629	186	1,062	3,901
-	-	-	-	-	-
-	-	-	-	-	-
-	-	-	-	-	-
-	-	-	-	-	
-	-	180,000	-	-	-
$ 8,565	$ 84,957	$ 1,379,058	$ 84,893	$ 296,986	$ 906,833
$ -	$ -	$ -	$ -	$ 8,651	$ -
-	-	-	-	6,715	-
-	-	-	-	-	-
-	-	-	-	15,366	-
-	-	-	-	-	-
-	-	-	-	-	-
				-	-
-	-	-	-	-	-
-	-	-	-	-	-
-	-	-	-	-	-
-	-	-	-	-	-
-	-	-	-	-	-
-	-	-	-	-	-
-	-	-	-	-	-
-	-	-	-	-	-
-	-	-	-	-	-
-	-	-	-		
				-	-
-	-	-	-	-	-
8,565	84,957	1,379,058	84,893	281,620	906,833
-	-	-	-	-	-
-	-	-	-	-	-
-	-	-	-	-	-
-	-	-	-	-	-
8,565	84,957	1,379,058	84,893	281,620	906,833
$ 8,565	$ 84,957	$ 1,379,058	$ 84,893	$ 296,986	$ 906,833

LINCOLN COUNTY, NEVADA
NONMAJOR SPECIAL REVENUE FUNDS
COMBINING BALANCE SHEET
June 30, 2019
(With Comparative Totals for June 30, 2018)

	Lincoln County Water District Special Proj.	Assessor Technology	District Court Technology	District Court Specialty Court	Court Security
ASSETS					
Pooled cash and investments	$ 666,069	$ 44,771	$ 5,120	$ 2,850	$ 10,990
Interest receivable	2,800	-	-	-	23
Taxes receivable	-	-	-	-	-
Due from other governments	-	-	-	-	-
Due from others	-	-	-	-	-
Prepaid expense	40,000	-	-	-	-
Interfund receivable	-	-	-	-	-
Total assets	$ 708,869	$ 44,771	$ 5,120	$ 2,850	$ 11,013
LIABILITIES					
Accounts payable	$ -	$ 9,449	$ -	$ 2,761	$ -
Accrued payroll and benefits	-	-	-	-	-
Unearned revenue	-	-	-	-	-
Total liabilities	-	9,449	-	2,761	-
DEFERRED INFLOWS OF RESOURCES					
Unavailable revenue - property taxes	-	-	-	-	-
FUND BALANCE					
Nonspendable	40,000	-	-	-	-
Restricted for:					
Unincorporated towns	-	-	-	-	-
Multi-species conservation	-	-	-	-	-
General government	-	35,322	-	-	-
Public safety	-	-	-	-	-
Judicial	-	-	5,120	89	11,013
Public works	-	-	-	-	-
Health	-	-	-	-	-
Welfare	-	-	-	-	-
Culture and recreation	-	-	-	-	-
Community support	-	-	-	-	-
Intergovernmental	-	-	-	-	-
Committed for:					
Land act	-	-	-	-	-
Water	-	-	-	-	-
Lincoln County Water District	668,869	-	-	-	-
General government	-	-	-	-	-
Health	-	-	-	-	-
Unassigned	-	-	-	-	-
Total fund balance	708,869	35,322	5,120	89	11,013
Total liabilities, deferred inflows of resources, and fund balance	$ 708,869	$ 44,771	$ 5,120	$ 2,850	$ 11,013

District Court Enrichment	Nuclear Waste	Property Management	Totals 2019	Totals 2018
$ 50,370	$ -	$ 73,415	$ 7,584,714	$ 7,428,800
105	-	-	17,652	15,549
-	-	-	21,286	19,119
-	-	-	89,160	60,569
-	-	-	-	1,679
-	-	-	40,000	48,000
-	-	-	180,000	190,000
$ 50,475	$ -	$ 73,415	$ 7,932,812	$ 7,763,716
$ -	$ -	$ 5,422	$ 189,113	$ 194,237
-	-	273	55,090	68,797
-	-	-	94,601	144,572
-	-	5,695	338,804	407,606
-	-	-	9,783	10,388
-	-	-	40,000	48,000
-	-	-	280,019	218,847
-	-	-	879,908	862,881
-	-	-	230,811	252,808
-	-	-	59,838	66,280
50,475	-	-	289,301	231,092
-	-	-	815,674	744,430
-	-	-	496	253
-	-	-	814,730	763,905
-	-	-	244,626	208,268
-	-	-	228,857	225,800
-	-	-	1,454	1,104
-	-	-	134,807	132,195
-	-	-	2,746,544	2,834,671
-	-	-	668,869	645,958
-	-	67,720	124,101	100,046
-	-	-	23,668	9,453
-	-	-	522	(269)
50,475	-	67,720	7,584,225	7,345,722
$ 50,475	$ -	$ 73,415	$ 7,932,812	$ 7,763,716

LINCOLN COUNTY, NEVADA
NONMAJOR SPECIAL REVENUE FUNDS
COMBINING SCHEDULE OF REVENUES, EXPENDITURES,
AND CHANGES IN FUND BALANCES
Year Ended June 30, 2019
(With Comparative Totals for Year Ended June 30, 2018)

	Pioche Town	Alamo Town	Panaca Town	Resource Development Authority	County Library
Revenues:					
Taxes	$ 56,891	$ 54,656	$ 12,439	$ -	$ 96,441
Licenses and permits	3,960	-	-	-	-
Intergovernmental	56,672	23,547	42,573	63,101	107
Charges for services	-	-	-	-	-
Fines and forfeitures	-	-	-	-	-
Miscellaneous	11,027	7,269	749	1,000	463
Total revenues	128,550	85,472	55,761	64,101	97,011
Expenditures:					
General government	7,225	24,940	2,658	-	-
Public safety	-	-	-	-	-
Judicial	-	-	-	-	-
Public works	25,128	418	10,557	-	-
Health	3,353	-	11,083	-	-
Welfare	-	-	-	-	-
Culture and recreation	49,431	51,047	22,771	-	89,046
Community support	-	-	-	64,101	-
Intergovernmental	-	-	-	-	-
Total expenditures	85,137	76,405	47,069	64,101	89,046
Excess (deficiency) of revenues over expenditures	43,413	9,067	8,692	-	7,965
Other financing sources (uses):					
Operating transfers in	-	-	-	-	-
Operating transfers out	-	-	-	-	-
Total other financing sources (uses)	-	-	-	-	-
Net change in fund balance	43,413	9,067	8,692	-	7,965
Fund balance:					
Beginning of year	136,546	69,136	13,165	-	50,987
End of year	$ 179,959	$ 78,203	$ 21,857	$ -	$ 58,952

Museum	Senior Nutrition	Transportation	Agricultural Extension	Indigent	Medical Indigent	China Springs
$ 49,172	$ 118,181	$ -	$ 22,958	$ 82,419	$ 183,666	$ 9,644
-	-	-	-	-	-	-
54	184,189	78,402	25	91	201	11
-	23,859	4,297	-	-	-	-
-	-	-	-	-	-	-
6,421	1,439	-	-	-	8,200	-
55,647	327,668	82,699	22,983	82,510	192,067	9,655
-	-	-	-	-	-	-
-	-	-	-	-	-	-
-	-	-	-	-	-	-
-	-	-	-	-	-	-
-	-	-	-	-	-	-
-	319,380	-	-	90,340	154,890	-
45,107	-	-	-	-	-	-
-	-	98,386	20,996	-	-	-
-	-	-	-	-	-	19,305
45,107	319,380	98,386	20,996	90,340	154,890	19,305
10,540	8,288	(15,687)	1,987	(7,830)	37,177	(9,650)
-	13,190	28,806	-	-	-	10,000
-	-	-	-	-	-	-
-	13,190	28,806	-	-	-	10,000
10,540	21,478	13,119	1,987	(7,830)	37,177	350
57,352	35,010	162,489	25,441	367,952	360,943	1,104
$ 67,892	$ 56,488	$ 175,608	$ 27,428	$ 360,122	$ 398,120	$ 1,454

LINCOLN COUNTY, NEVADA
NONMAJOR SPECIAL REVENUE FUNDS
COMBINING SCHEDULE OF REVENUES, EXPENDITURES,
AND CHANGES IN FUND BALANCES
Year Ended June 30, 2019
(With Comparative Totals for Year Ended June 30, 2018)

	Ambulance	Regional Streets and Highways	Room Tax	Legal Aid Services
Revenues:				
Taxes	$ -	$ -	$ 69,119	$ -
Licenses and permits	-	-	-	-
Intergovernmental	-	119,694	-	-
Charges for services	120,597	-	-	1,743
Fines and forfeitures	-	-	-	-
Miscellaneous	259	10,876	-	-
Total revenues	120,856	130,570	69,119	1,743
Expenditures:				
General government	-	-	-	-
Public safety	-	-	-	-
Judicial	-	-	-	12,566
Public works	-	33,331	-	-
Health	106,641	-	-	-
Welfare	-	-	-	-
Culture and recreation	-	-	36,067	-
Community support	-	-	-	-
Intergovernmental	-	-	4,879	-
Total expenditures	106,641	33,331	40,946	12,566
Excess (deficiency) of revenues over expenditures	14,215	97,239	28,173	(10,823)
Other financing sources (uses):				
Operating transfers in	-	-	-	-
Operating transfers out	-	(28,806)	(10,000)	-
Total other financing sources (uses)	-	(28,806)	(10,000)	-
Net change in fund balance	14,215	68,433	18,173	(10,823)
Fund balance:				
Beginning of year	9,453	601,841	79,811	10,630
End of year	$ 23,668	$ 670,274	$ 97,984	$ (193)

Forensic Services	Administrative Assessment	Forfeiture	Recorder Technology	L. C. Housing Authority	Alamo Clinic
$ -	$ -	$ -	$ -	$ -	$ 97,575
-	-	-	-	-	-
-	-	-	-	-	107
2,066	-	-	7,065	-	-
-	44,819	-	-	-	-
-	1,939	1,061	402	34,019	-
2,066	46,758	1,061	7,467	34,019	97,682
-	-	-	-	-	-
1,323	-	8,246	-	-	-
-	18,591	-	-	-	-
-	-	-	-	-	-
-	-	-	-	-	97,439
-	-	-	-	-	-
-	-	-	-	-	-
-	-	-	-	46,068	-
-	-	-	-	-	-
1,323	18,591	8,246	-	46,068	97,439
743	28,167	(7,185)	7,467	(12,049)	243
-	-	-	-	-	-
-	-	-	-	-	-
-	-	-	-	-	-
743	28,167	(7,185)	7,467	(12,049)	243
7,760	82,950	58,520	16,023	31,863	253
$ 8,503	$ 111,117	$ 51,335	$ 23,490	$ 19,814	$ 496

LINCOLN COUNTY, NEVADA
NONMAJOR SPECIAL REVENUE FUNDS
COMBINING SCHEDULE OF REVENUES, EXPENDITURES,
AND CHANGES IN FUND BALANCES
Year Ended June 30, 2019
(With Comparative Totals for Year Ended June 30, 2018)

	Fair Board	Multi-Species Habitat Conservation	Multi-Species Habitat Conservation Section 7	Youth Activities Counsel
Revenues:				
Taxes	$ -	$ -	$ -	$ -
Licenses and permits	-	-	-	-
Intergovernmental	-	4,818	-	-
Charges for services	-	-	-	-
Fines and forfeitures	-	-	-	-
Miscellaneous	32,134	351	17,027	-
Total revenues	32,134	5,169	17,027	-
Expenditures:				
General government	-	5,169	-	-
Public safety	-	-	-	-
Judicial	-	-	-	-
Public works	-	-	-	-
Health	-	-	-	-
Welfare	-	-	-	-
Culture and recreation	42,454	-	-	-
Community support	-	-	-	-
Intergovernmental	-	-	-	-
Total expenditures	42,454	5,169	-	-
Excess (deficiency) of revenues over expenditures	(10,320)	-	17,027	-
Other financing sources (uses):				
Operating transfers in	10,000	-	-	-
Operating transfers out	-	-	-	-
Total other financing sources (uses)	10,000	-	-	-
Net change in fund balance	(320)	-	17,027	-
Fund balance:				
Beginning of year	20,118	-	862,881	6,007
End of year	$ 19,798	$ -	$ 879,908	$ 6,007

Genetic Marker Testing	Public Improvement	Airport	Panaca Town Building	Court Facility Fees	Tri County Weed Control	Lincoln County Land Act General
$ -	$ -	$ -	$ -	$ -	$ -	$ -
-	-	-	-	-	-	-
-	-	-	-	-	-	-
15,348	-	19,140	-	49,189	843,872	-
-	-	-	-	-	-	-
-	2,811	7,600	11,593	1,882	5,696	133
15,348	2,811	26,740	11,593	51,071	849,568	133
16,690	-	-	-	-	868,407	-
-	-	-	-	-	-	-
-	-	-	-	8,431	-	-
-	-	25,949	-	-	-	-
-	-	-	-	-	-	-
-	-	-	-	-	-	-
-	-	-	-	-	-	-
-	-	-	-	-	-	-
-	-	-	-	-	-	-
16,690	-	25,949	-	8,431	868,407	-
(1,342)	2,811	791	11,593	42,640	(18,839)	133
-	-	-	-	-	-	-
-	-	-	-	-	-	-
-	-	-	-	-	-	-
(1,342)	2,811	791	11,593	42,640	(18,839)	133
1,342	142,589	(269)	44,788	69,040	190,838	6,575
$ -	$ 145,400	$ 522	$ 56,381	$ 111,680	$ 171,999	$ 6,708

LINCOLN COUNTY, NEVADA
NONMAJOR SPECIAL REVENUE FUNDS
COMBINING SCHEDULE OF REVENUES, EXPENDITURES,
AND CHANGES IN FUND BALANCE
Year Ended June 30, 2019
(With Comparative Totals for Year Ended June 30, 2018)

	Lincoln County Land Act Planning and Development	Lincoln County Land Act Education	Lincoln County Land Act Grant Match	Lincoln County Water General
Revenues:				
Taxes	$ -	$ -	$ -	$ -
Licenses and permits	-	-	-	-
Intergovernmental	-	-	-	-
Charges for services	-	-	-	-
Fines and forfeitures	-	-	-	-
Miscellaneous	15	2,464	-	10
Total revenues	15	2,464	-	10
Expenditures:				
General government	-	-	-	-
Public safety	-	-	-	-
Judicial	-	-	-	-
Public works	-	-	-	-
Health	-	-	-	-
Welfare	-	-	-	-
Culture and recreation	-	-	-	-
Community support	-	-	-	-
Intergovernmental	-	-	-	-
Total expenditures	-	-	-	-
Excess (deficiency) of revenues over expenditures	15	2,464	-	10
Other financing sources (uses):				
Operating transfers in	-	-	-	-
Operating transfers out	-	-	-	-
Total other financing sources (uses)	-	-	-	-
Net change in fund balance	15	2,464	-	10
Fund balance:				
Beginning of year	668	124,801	151	608
End of year	$ 683	$ 127,265	$ 151	$ 618

Lincoln County Water Special Projects	Lincoln County Water Planning and Development	Lincoln County Water Special Use	Lincoln County Water Grant Match	Lincoln County Water District General	Lincoln County Water District Plan & Dev	Lincoln County Water District Special Proj.
$ -	$ -	$ -	$ -	$ -	$ -	$ -
-	-	-	-	-	-	-
-	-	-	-	-	-	-
-	-	-	-	-	-	-
-	-	-	-	-	-	-
167	1,643	23,192	1,640	9,193	31,918	22,911
167	1,643	23,192	1,640	9,193	31,918	22,911
-	-	-	-	154,022	1,868	8,000
-	-	-	-	-	-	-
-	-	-	-	-	-	-
-	-	-	-	-	-	-
-	-	-	-	-	-	-
-	-	-	-	-	-	-
-	-	-	-	-	-	-
-	-	-	-	-	-	-
-	-	-	-	-	-	-
-	-	-	-	154,022	1,868	8,000
167	1,643	23,192	1,640	(144,829)	30,050	14,911
-	-	-	-	-	-	-
-	-	-	-	-	-	-
-	-	-	-	-	-	-
167	1,643	23,192	1,640	(144,829)	30,050	14,911
8,398	83,314	1,355,866	83,253	426,449	876,783	693,958
$ 8,565	$ 84,957	$ 1,379,058	$ 84,893	$ 281,620	$ 906,833	$ 708,869

LINCOLN COUNTY, NEVADA
NONMAJOR SPECIAL REVENUE FUNDS
COMBINING SCHEDULE OF REVENUES, EXPENDITURES,
AND CHANGES IN FUND BALANCE
Year Ended June 30, 2019
(With Comparative Totals for Year Ended June 30, 2018)

	Assessor Technology	District Court Technology	District Court Specialty Court	Court Security
Revenues:				
Taxes	$ -	$ -	$ -	$ -
Licenses and permits	-	-	-	-
Intergovernmental	-	-	-	-
Charges for services	13,336	-	12,219	1,100
Fines and forfeitures	-	-	-	-
Miscellaneous	-	-	-	206
Total revenues	13,336	-	12,219	1,306
Expenditures:				
General government	22,619	-	-	-
Public safety	-	-	-	-
Judicial	-	-	22,106	-
Public works	-	-	-	-
Health	-	-	-	-
Welfare	-	-	-	-
Culture and recreation	-	-	-	-
Community support	-	-	-	-
Intergovernmental	-	-	-	-
Total expenditures	22,619	-	22,106	-
Excess (deficiency) of revenues over expenditures	(9,283)	-	(9,887)	1,306
Other financing sources (uses):				
Operating transfers in	-	-	-	-
Operating transfers out	-	-	-	-
Total other financing sources (uses)	-	-	-	-
Net change in fund balance	(9,283)	-	(9,887)	1,306
Fund balance:				
Beginning of year	44,605	5,120	9,976	9,707
End of year	$ 35,322	$ 5,120	$ 89	$ 11,013

District Court Enrichment	Nuclear Waste	Property Management	Totals 2019	2018
$ -	$ -	$ -	$ 853,161	$ 819,991
-	-	-	3,960	3,028
-	1,001	-	574,593	552,820
5,877	-	-	1,119,708	982,901
-	-	-	44,819	59,254
929	1	15,200	273,840	113,072
6,806	1,002	15,200	2,870,081	2,531,066
-	1,002	42,738	1,155,338	1,135,594
-	-	-	9,569	16,344
-	-	-	61,694	171,395
-	-	-	95,383	118,437
-	-	-	218,516	195,366
-	-	-	564,610	507,436
-	-	-	335,923	348,408
-	-	-	229,551	243,265
-	-	-	24,184	25,261
-	1,002	42,738	2,694,768	2,761,506
6,806	-	(27,538)	175,313	(230,440)
-	-	40,000	101,996	265,197
-	-	-	(38,806)	(130,721)
-	-	40,000	63,190	134,476
6,806	-	12,462	238,503	(95,964)
43,669	-	55,258	7,345,722	7,441,686
$ 50,475	$ -	$ 67,720	$ 7,584,225	$ 7,345,722

LINCOLN COUNTY, NEVADA
NONMAJOR PIOCHE TOWN SPECIAL REVENUE FUND
COMPARATIVE BALANCE SHEETS
June 30, 2019 and 2018

	2019	2018
ASSETS		
Pooled cash and investments	$ 180,251	$ 135,602
Interest receivable	367	243
Taxes receivable	1,126	2,109
Due from other governments	9,852	9,343
Total assets	$ 191,596	$ 147,297
LIABILITIES		
Accounts payable	$ 6,802	$ 3,326
Accrued payroll and benefits	3,715	5,406
Total liabilities	10,517	8,732
DEFERRED INFLOWS OF RESOURCES		
Unavailable revenue - property taxes	1,120	2,019
FUND BALANCE		
Restricted	179,959	136,546
Total liabilities, deferred inflows of resources, and fund balance	$ 191,596	$ 147,297

LINCOLN COUNTY, NEVADA
NONMAJOR PIOCHE TOWN SPECIAL REVENUE FUND
SCHEDULE OF REVENUES, EXPENDITURES, AND CHANGES IN FUND BALANCE - BUDGET (GAAP BASIS) AND ACTUAL
Year Ended June 30, 2019

(With Comparative Actual Amounts for Year Ended June 30, 2018)

	2019 Budget	2019 Actual	Variance - Positive (Negative)	2018 Actual
Revenues:				
Taxes:				
Property taxes	$ 55,366	$ 56,891	$ 1,525	$ 52,012
Licenses and permits:				
Gaming licenses	2,500	3,060	560	2,295
Liquor licenses	1,300	900	(400)	733
Total licenses and permits	3,800	3,960	160	3,028
Intergovernmental:				
Consolidated tax	54,767	56,672	1,905	53,356
Miscellaneous:				
Investment income	-	3,234	3,234	50
Rent	5,870	7,793	1,923	7,334
Total miscellaneous	5,870	11,027	5,157	7,384
Total revenues	119,803	128,550	8,747	115,780
Expenditures:				
Current:				
General government:				
Other general expenses:				
Employee benefits	966	963	3	1,080
Services and supplies	10,500	6,262	4,238	6,851
Total general government	11,466	7,225	4,241	7,931
Public works:				
Highways and streets:				
Salaries and wages	6,474	7,642	(1,168)	6,516
Employee benefits	2,815	2,914	(99)	3,064
Services and supplies	33,826	14,572	19,254	20,007
Total public works	43,115	25,128	17,987	29,587
Health:				
Cemetery:				
Salaries and wages	1,530	1,129	401	1,871
Employee benefits	408	396	12	748
Services and supplies	2,513	1,828	685	1,121
Total health	$ 4,451	$ 3,353	$ 1,098	$ 3,740

LINCOLN COUNTY, NEVADA
NONMAJOR PIOCHE TOWN SPECIAL REVENUE FUND (Continued)
SCHEDULE OF REVENUES, EXPENDITURES, AND CHANGES
IN FUND BALANCE - BUDGET (GAAP BASIS) AND ACTUAL
Year Ended June 30, 2019

(With Comparative Actual Amounts for Year Ended June 30, 2018)

	2019 Budget	2019 Actual	Variance - Positive (Negative)	2018 Actual
Expenditures: (Continued)				
Culture and recreation:				
Parks:				
Salaries and wages	$ 7,045	$ 7,638	$ (593)	$ 9,592
Employee benefits	1,909	2,265	(356)	3,536
Services and supplies	17,188	14,647	2,541	15,323
Total parks	26,142	24,550	1,592	28,451
Swimming pool:				
Salaries and wages	11,503	8,677	2,826	12,259
Employee benefits	2,561	2,028	533	3,200
Services and supplies	8,126	9,200	(1,074)	7,080
Total swimming pool	22,190	19,905	2,285	22,539
Town hall:				
Salaries and wages	94	802	(708)	451
Employee benefits	27	436	(409)	180
Services and supplies	1,985	3,738	(1,753)	3,214
Total town hall	2,106	4,976	(2,870)	3,845
Total culture and recreation	50,438	49,431	1,007	54,835
Contingency	3,284	-	3,284	-
Total expenditures	112,754	85,137	27,617	96,093
Excess (deficiency) of revenues over expenditures	7,049	43,413	36,364	19,687
Fund balance:				
Beginning of year	108,913	136,546	27,633	116,859
End of year	$ 115,962	$ 179,959	$ 63,997	$ 136,546

LINCOLN COUNTY, NEVADA
NONMAJOR ALAMO TOWN SPECIAL REVENUE FUND
COMPARATIVE BALANCE SHEETS
June 30, 2019 and 2018

	2019	2018
ASSETS		
Pooled cash and investments	$ 80,197	$ 69,175
Interest receivable	134	125
Taxes receivable	597	686
Due from other governments	4,101	3,884
Total assets	$ 85,029	$ 73,870
LIABILITIES		
Accounts payable	$ 5,655	$ 3,381
Accrued payroll and benefits	573	1,070
Total liabilities	6,228	4,451
DEFERRED INFLOWS OF RESOURCES		
Unavailable revenue - property taxes	598	283
FUND BALANCE		
Restricted	78,203	69,136
Total liabilities, deferred inflows of resources, and fund balance	$ 85,029	$ 73,870

LINCOLN COUNTY, NEVADA
NONMAJOR ALAMO TOWN SPECIAL REVENUE FUND
SCHEDULE OF REVENUES, EXPENDITURES, AND CHANGES IN FUND BALANCE - BUDGET (GAAP BASIS) AND ACTUAL
Year Ended June 30, 2019
(With Comparative Actual Amounts for Year Ended June 30, 2018)

	2019 Budget	2019 Actual	Variance - Positive (Negative)	2018 Actual
Revenues:				
Taxes:				
Property taxes	$ 54,610	$ 54,656	$ 46	$ 53,723
Intergovernmental:				
Consolidated tax	22,723	23,547	824	22,132
Miscellaneous:				
Investment income	50	1,185	1,135	27
Other	4,000	6,084	2,084	5,160
Total miscellaneous	4,050	7,269	3,219	5,187
Total revenues	81,383	85,472	4,089	81,042
Expenditures:				
Current:				
General government:				
Salaries and wages	22,200	18,990	3,210	18,754
Employee benefits	2,800	2,405	395	2,545
Services and supplies	5,150	3,545	1,605	4,083
Total general government	30,150	24,940	5,210	25,382
Public works:				
Highways and streets:				
Services and supplies	3,100	418	2,682	2,161
Culture and recreation:				
P.V. senior center:				
Services and supplies	3,800	4,029	(229)	3,427
Parks:				
Services and supplies	67,097	47,018	20,079	27,248
Total culture and recreation	70,897	51,047	19,850	30,675
Total expenditures	$ 104,147	$ 76,405	$ 27,742	$ 58,218

LINCOLN COUNTY, NEVADA
NONMAJOR ALAMO TOWN SPECIAL REVENUE FUND (Continued)
SCHEDULE OF REVENUES, EXPENDITURES, AND CHANGES
IN FUND BALANCE - BUDGET (GAAP BASIS) AND ACTUAL
Year Ended June 30, 2019
(With Comparative Actual Amounts for Year Ended June 30, 2018)

	2019			2018
	Budget	Actual	Variance - Positive (Negative)	Actual
Excess (deficiency) of revenues over expenditures	$ (22,764)	$ 9,067	$ 31,831	$ 22,824
Fund balance:				
Beginning of year	25,223	69,136	43,913	46,312
End of year	$ 2,459	$ 78,203	$ 75,744	$ 69,136

LINCOLN COUNTY, NEVADA
NONMAJOR PANACA TOWN SPECIAL REVENUE FUND
COMPARATIVE BALANCE SHEETS
June 30, 2019 and 2018

	2019	2018
ASSETS		
Pooled cash and investments	$ 16,465	$ 8,638
Interest receivable	31	13
Taxes receivable	307	279
Due from other governments	7,398	7,040
Total assets	$ 24,201	$ 15,970
LIABILITIES		
Accounts payable	$ 1,895	$ 2,395
Accrued payroll and benefits	189	202
Total liabilities	2,084	2,597
DEFERRED INFLOWS OF RESOURCES		
Unavailable revenue - property taxes	260	208
FUND BALANCE		
Restricted	21,857	13,165
Total liabilities, deferred inflows of resources, and fund balance	$ 24,201	$ 15,970

LINCOLN COUNTY, NEVADA
NONMAJOR PANACA TOWN SPECIAL REVENUE FUND
SCHEDULE OF REVENUES, EXPENDITURES, AND CHANGES
IN FUND BALANCE - BUDGET (GAAP BASIS) AND ACTUAL
Year Ended June 30, 2019

(With Comparative Actual Amounts for Year Ended June 30, 2018)

	2019 Budget	2019 Actual	Variance - Positive (Negative)	2018 Actual
Revenues:				
Taxes:				
Property taxes	$ 12,239	$ 12,439	$ 200	$ 11,415
Intergovernmental:				
Consolidated tax	41,135	42,573	1,438	40,104
Miscellaneous:				
Investment income	-	274	274	3
Rent	750	475	(275)	-
Total miscellaneous	750	749	(1)	3
Total revenues	54,124	55,761	1,637	51,522
Expenditures:				
Current:				
General government:				
Employee benefits	432	490	(58)	546
Services and supplies	2,261	2,168	93	2,126
Total general government	2,693	2,658	35	2,672
Public works:				
Highways and streets:				
Services and supplies	18,370	10,557	7,813	15,235
Health:				
Cemetery:				
Salaries and wages	9,600	9,600	-	9,600
Employee benefits	1,050	1,002	48	1,050
Services and supplies	490	481	9	431
Total health	$ 11,140	$ 11,083	$ 57	$ 11,081

LINCOLN COUNTY, NEVADA
NONMAJOR PANACA TOWN SPECIAL REVENUE FUND
SCHEDULE OF REVENUES, EXPENDITURES, AND CHANGES
IN FUND BALANCE - BUDGET (GAAP BASIS) AND ACTUAL
Year Ended June 30, 2019

(With Comparative Actual Amounts for Year Ended June 30, 2018)

	2019 Budget	2019 Actual	Variance - Positive (Negative)	2018 Actual
Expenditures continued:				
Culture and recreation:				
Parks:				
Services and supplies	$ 19,354	$ 12,811	$ 6,543	$ 12,545
Town hall:				
Salaries and wages	2,400	2,400	-	2,400
Employee benefits	184	184	-	184
Services and supplies	3,911	7,376	(3,465)	3,728
Total culture and recreation	25,849	22,771	3,078	18,857
Total expenditures	58,052	47,069	10,983	47,845
Excess (deficiency) of revenues over expenditures	(3,928)	8,692	12,620	3,677
Fund balance:				
Beginning of year	6,062	13,165	7,103	9,488
End of year	$ 2,134	$ 21,857	$ 19,723	$ 13,165

LINCOLN COUNTY, NEVADA
NONMAJOR RESOURCE DEVELOPMENT AUTHORITY SPECIAL REVENUE FUND
COMPARATIVE BALANCE SHEETS
June 30, 2019 and 2018

	2019	2018
ASSETS		
Pooled cash and investments	$ 87,564	$ 86,329
LIABILITIES		
Accounts payable	$ 9,291	$ 2,455
Unearned revenue	78,273	83,874
Total liabilities	87,564	86,329
FUND BALANCE		
Nonspendable	-	-
Total liabilities and fund balance	$ 87,564	$ 86,329

LINCOLN COUNTY, NEVADA
NONMAJOR RESOURCE DEVELOPMENT AUTHORITY SPECIAL REVENUE FUND
SCHEDULE OF REVENUES, EXPENDITURES, AND CHANGES
IN FUND BALANCE - BUDGET (GAAP BASIS) AND ACTUAL
Year Ended June 30, 2019
(With Comparative Actual Amounts for Year Ended June 30, 2018)

	2019 Budget	2019 Actual	Variance - Positive (Negative)	2018 Actual
Revenues:				
Intergovernmental:				
Grants	$ 64,101	$ 63,101	$ (1,000)	$ 62,354
Miscellaneous:				
Donations	-	1,000	1,000	1,300
Total revenues	64,101	64,101	-	63,654
Expenditures:				
Current:				
Community support:				
Services and supplies	64,101	31,588	32,513	73,654
Capital outlay	-	32,513	(32,513)	-
Total expenditures	64,101	64,101	-	73,654
Excess (deficiency) of revenues over expenditures	-	-	-	(10,000)
Other financing sources (uses):				
Operating transfers in	-	-	-	10,000
Net change in fund balance	-	-	-	-
Fund balance:				
Beginning of year	-	-	-	-
End of year	$ -	$ -	$ -	$ -

LINCOLN COUNTY, NEVADA
NONMAJOR COUNTY LIBRARY SPECIAL REVENUE FUND
COMPARATIVE BALANCE SHEETS
June 30, 2019 and 2018

	2019	2018
ASSETS		
Pooled cash and investments	$ 63,313	$ 57,226
Taxes receivable	1,438	1,397
Due from governments	-	93
Total assets	$ 64,751	$ 58,716
LIABILITIES		
Accounts payable	$ 1,419	$ 3,671
Accrued payroll and benefits	3,243	2,905
Total liabilities	4,662	6,576
DEFERRED INFLOWS OF RESOURCES		
Unavailable revenue - property taxes	1,137	1,153
FUND BALANCE		
Restricted	58,952	50,987
Total liabilities, deferred inflows of resources, and fund balance	$ 64,751	$ 58,716

LINCOLN COUNTY, NEVADA
NONMAJOR COUNTY LIBRARY SPECIAL REVENUE FUND
SCHEDULE OF REVENUES, EXPENDITURES, AND CHANGES IN FUND BALANCE - BUDGET (GAAP BASIS) AND ACTUAL
Year Ended June 30, 2019
(With Comparative Actual Amounts for Year Ended June 30, 2018)

	2019		Variance - Positive	2018
	Budget	Actual	(Negative)	Actual
Revenues:				
Taxes:				
Property taxes	$ 94,824	$ 96,441	$ 1,617	$ 91,183
Intergovernmental:				
Private car line	-	-	-	172
Fish and wildlife	-	107	107	93
Total intergovernmental	-	107	107	265
Miscellaneous:				
Rent	-	130	130	40
Donations	-	333	333	-
Total miscellaneous	-	463	463	40
Total revenues	94,824	97,011	2,187	91,488
Expenditures:				
Current:				
Culture and recreation:				
Libraries:				
Salaries and wages	48,157	44,547	3,610	38,600
Employee benefits	20,464	20,201	263	18,424
Services and supplies	31,900	24,298	7,602	23,734
Capital outlay	15,000	-	15,000	25,575
Total expenditures	115,521	89,046	26,475	106,333
Excess (deficiency) of revenues over expenditures	(20,697)	7,965	28,662	(14,845)
Other financing sources (uses):				
Operating transfers out	-	-	-	(4,000)
Net change in fund balance	(20,697)	7,965	28,662	(18,845)
Fund balance:				
Beginning of year	35,941	50,987	15,046	69,832
End of year	$ 15,244	$ 58,952	$ 43,708	$ 50,987

LINCOLN COUNTY, NEVADA
NONMAJOR MUSEUM SPECIAL REVENUE FUND
COMPARATIVE BALANCE SHEETS
June 30, 2019 and 2018

	2019	2018
ASSETS		
Pooled cash and investments	$ 70,536	$ 60,377
Taxes receivable	731	712
Due from other governments	-	46
Total assets	$ 71,267	$ 61,135
LIABILITIES		
Accounts payable	$ 241	$ 402
Accrued payroll and benefits	2,555	2,794
Total liabilities	2,796	3,196
DEFERRED INFLOWS OF RESOURCES		
Unavailable revenue - property taxes	579	587
FUND BALANCE		
Restricted	67,892	57,352
Total liabilities, deferred inflows of resources, and fund balance	$ 71,267	$ 61,135

LINCOLN COUNTY, NEVADA
NONMAJOR MUSEUM SPECIAL REVENUE FUND
SCHEDULE OF REVENUES, EXPENDITURES, AND CHANGES IN FUND BALANCE - BUDGET (GAAP BASIS) AND ACTUAL
Year Ended June 30, 2019
(With Comparative Actual Amounts for Year Ended June 30, 2018)

	2019		Variance - Positive	2018
	Budget	Actual	(Negative)	Actual
Revenues:				
Taxes:				
Property taxes	$ 48,445	$ 49,172	$ 727	$ 46,529
Intergovernmental:				
Fish and wildlife	-	54	54	47
Private car line	-	-	-	87
Total intergovernmental	-	54	54	134
Miscellaneous:				
Donations	-	6,421	6,421	3,551
Total revenues	48,445	55,647	7,202	50,214
Expenditures:				
Current:				
Culture and recreation:				
Museum:				
Salaries and wages	46,599	29,257	17,342	28,908
Employee benefits	12,464	9,622	2,842	9,654
Services and supplies	16,800	6,228	10,572	6,370
Capital outlay	5,000	-	5,000	-
Total expenditures	80,863	45,107	35,756	44,932
Net change in fund balance	(32,418)	10,540	42,958	5,282
Fund balance:				
Beginning of year	37,014	57,352	20,338	52,070
End of year	$ 4,596	$ 67,892	$ 63,296	$ 57,352

LINCOLN COUNTY, NEVADA
NONMAJOR SENIOR NUTRITION SPECIAL REVENUE FUND
COMPARATIVE BALANCE SHEETS
June 30, 2019 and 2018

	2019	2018
ASSETS		
Pooled cash and investments	$ 47,466	$ 95,320
Taxes receivable	1,760	1,718
Due from other governments	25,493	112
Due from others	-	1,679
Total assets	$ 74,719	$ 98,829
LIABILITIES		
Accounts payable	$ 10,692	$ 16,438
Accrued payroll and benefits	6,144	7,420
Unearned revenue	-	38,551
Total liabilities	16,836	62,409
DEFERRED INFLOWS OF RESOURCES		
Unavailable revenue - property taxes	1,395	1,410
FUND BALANCE		
Restricted	56,488	35,010
Total liabilities, deferred inflows of resources, and fund balance	$ 74,719	$ 98,829

LINCOLN COUNTY, NEVADA
NONMAJOR SENIOR NUTRITION SPECIAL REVENUE FUND
SCHEDULE OF REVENUES, EXPENDITURES, AND CHANGES IN FUND BALANCE - BUDGET (GAAP BASIS) AND ACTUAL
Year Ended June 30, 2019
(With Comparative Actual Amounts for Year Ended June 30, 2018)

	2019		Variance - Positive	2018
	Budget	Actual	(Negative)	Actual
Revenues:				
Taxes:				
Property taxes	$ 117,042	$ 118,181	$ 1,139	$ 112,075
Intergovernmental:				
Private car line	-	-	-	208
Grants	184,059	184,060	1	139,094
Fish and wildlife	115	129	14	113
Total intergovernmental	184,174	184,189	15	139,415
Charges for services:				
Sales - meals	25,000	23,859	(1,141)	18,212
Miscellaneous:				
Other	2,000	-	(2,000)	-
Donations	-	1,439	1,439	1,416
Total miscellaneous	2,000	1,439	(561)	1,416
Total revenues	328,216	327,668	(548)	271,118
Expenditures:				
Current:				
Welfare:				
Salaries and wages	88,800	74,243	14,557	87,456
Employee benefits	39,469	35,477	3,992	46,597
Services and supplies	180,198	163,188	17,010	177,069
Capital outlay	38,551	46,472	(7,921)	5,200
Total expenditures	347,018	319,380	27,638	316,322
Excess (deficiency) of revenues over expenditures	(18,802)	8,288	27,090	(45,204)
Other financing sources (uses):				
Operating transfers in	-	13,190	13,190	15,197
Net change in fund balance	(18,802)	21,478	40,280	(30,007)
Fund balance:				
Beginning of year	24,765	35,010	10,245	65,017
End of year	$ 5,963	$ 56,488	$ 50,525	$ 35,010

LINCOLN COUNTY, NEVADA
NONMAJOR TRANSPORTATION SPECIAL REVENUE FUND
COMPARATIVE BALANCE SHEETS
June 30, 2019 and 2018

	2019	2018
ASSETS		
Pooled cash and investments	$ 177,516	$ 160,894
Due from other governments	9,375	8,517
Total assets	$ 186,891	$ 169,411
LIABILITIES		
Accounts payable	$ 7,324	$ 3,014
Accrued payroll and benefits	3,959	3,908
Total liabilities	11,283	6,922
FUND BALANCE		
Restricted	175,608	162,489
Total liabilities and fund balance	$ 186,891	$ 169,411

LINCOLN COUNTY, NEVADA
NONMAJOR TRANSPORTATION SPECIAL REVENUE FUND
SCHEDULE OF REVENUES, EXPENDITURES, AND CHANGES IN FUND BALANCE - BUDGET (GAAP BASIS) AND ACTUAL
Year Ended June 30, 2019
(With Comparative Actual Amounts for Year Ended June 30, 2018)

	2019		Variance - Positive	2018
	Budget	Actual	(Negative)	Actual
Revenues:				
Intergovernmental:				
Grants	$ -	$ 78,402	$ 78,402	$ 82,211
Charges for services:				
Bus fares	5,800	4,297	(1,503)	5,282
Total revenues	5,800	82,699	76,899	87,493
Expenditures:				
Current:				
Community support:				
Salaries and wages	36,286	42,971	(6,685)	49,033
Employee benefits	24,971	25,479	(508)	26,832
Services and supplies	38,400	29,936	8,464	31,132
Total expenditures	99,657	98,386	1,271	106,997
Excess (deficiency) of revenues over expenditures	(93,857)	(15,687)	78,170	(19,504)
Other financing sources (uses):				
Operating transfers in	-	28,806	28,806	63,000
Net change in fund balance	(93,857)	13,119	106,976	43,496
Fund balance:				
Beginning of year	108,186	162,489	54,303	118,993
End of year	$ 14,329	$ 175,608	$ 161,279	$ 162,489

LINCOLN COUNTY, NEVADA
NONMAJOR AGRICULTURAL EXTENSION SPECIAL REVENUE FUND
COMPARATIVE BALANCE SHEETS
June 30, 2019 and 2018

	2019	2018
ASSETS		
Pooled cash and investments	$ 28,503	$ 29,491
Taxes receivable	342	334
Due from other governments	-	22
Total assets	$ 28,845	$ 29,847
LIABILITIES		
Accounts payable	$ 483	$ 3,470
Accrued payroll and benefits	662	662
Total liabilities	1,145	4,132
DEFERRED INFLOWS OF RESOURCES		
Unavailable revenue - property taxes	272	274
FUND BALANCE		
Restricted	27,428	25,441
Total liabilities, deferred inflows of resources, and fund balance	$ 28,845	$ 29,847

LINCOLN COUNTY, NEVADA
NONMAJOR AGRICULTURAL EXTENSION SPECIAL REVENUE FUND
SCHEDULE OF REVENUES, EXPENDITURES, AND CHANGES
IN FUND BALANCE - BUDGET (GAAP BASIS) AND ACTUAL
Year Ended June 30, 2019
(With Comparative Actual Amounts for Year Ended June 30, 2018)

	2019		Variance - Positive	2018
	Budget	Actual	(Negative)	Actual
Revenues:				
Taxes:				
Property taxes	$ 22,745	$ 22,958	$ 213	$ 21,777
Intergovernmental:				
Private car line	-	-	-	40
Fish and wildlife	-	25	25	22
Total intergovernmental	-	25	25	62
Miscellaneous:				
Other	5,460	-	(5,460)	-
Total revenues	28,205	22,983	(5,222)	21,839
Expenditures:				
Current:				
Community support:				
Salaries and wages	13,913	13,403	510	13,579
Employee benefits	1,481	1,399	82	1,485
Services and supplies	16,000	6,194	9,806	11,477
Total expenditures	31,394	20,996	10,398	26,541
Excess (deficiency) of revenues over expenditures	(3,189)	1,987	5,176	(4,702)
Other financing sources (uses):				
Operating transfers in	-	-	-	7,000
Net change in fund balance	(3,189)	1,987	5,176	2,298
Fund balance:				
Beginning of year	18,438	25,441	7,003	23,143
End of year	$ 15,249	$ 27,428	$ 12,179	$ 25,441

LINCOLN COUNTY, NEVADA
NONMAJOR INDIGENT SPECIAL REVENUE FUND
COMPARATIVE BALANCE SHEETS
June 30, 2019 and 2018

	2019	2018
ASSETS		
Pooled cash and investments	$ 378,913	$ 371,512
Taxes receivable	1,231	1,198
Due from other governments	-	78
Total assets	$ 380,144	$ 372,788
LIABILITIES		
Accounts payable	$ 15,178	$ 993
Accrued payroll and benefits	3,867	2,860
Total liabilities	19,045	3,853
DEFERRED INFLOWS OF RESOURCES		
Unavailable revenue - property taxes	977	983
FUND BALANCE		
Restricted	360,122	367,952
Total liabilities, deferred inflows of resources, and fund balance	$ 380,144	$ 372,788

LINCOLN COUNTY, NEVADA
NONMAJOR INDIGENT SPECIAL REVENUE FUND
SCHEDULE OF REVENUES, EXPENDITURES, AND CHANGES IN FUND BALANCE - BUDGET (GAAP BASIS) AND ACTUAL
Year Ended June 30, 2019
(With Comparative Actual Amounts for Year Ended June 30, 2018)

	2019 Budget	2019 Actual	Variance - Positive (Negative)	2018 Actual
Revenues:				
Taxes:				
Property taxes	$ 81,650	$ 82,419	$ 769	$ 78,177
Intergovernmental:				
Private car line	-	-	-	145
Fish and wildlife	-	91	91	78
Total intergovernmental	-	91	91	223
Total revenues	81,650	82,510	860	78,400
Expenditures:				
Current:				
Welfare:				
Salaries and wages	49,500	48,490	1,010	36,498
Employee benefits	20,810	20,290	520	13,702
Service and supplies	349,282	21,560	327,722	3,528
Total expenditures	419,592	90,340	329,252	53,728
Excess (deficiency) of revenues over expenditures	(337,942)	(7,830)	330,112	24,672
Fund balance:				
Beginning of year	340,983	367,952	26,969	343,280
End of year	$ 3,041	$ 360,122	$ 357,081	$ 367,952

LINCOLN COUNTY, NEVADA
NONMAJOR MEDICAL INDIGENT SPECIAL REVENUE FUND
COMPARATIVE BALANCE SHEETS
June 30, 2019 and 2018

	2019	2018
ASSETS		
Pooled cash and investments	$ 414,480	$ 436,522
Interest receivable	930	773
Taxes receivable	2,742	2,672
Due from other governments	-	175
Total assets	$ 418,152	$ 440,142
LIABILITIES		
Accounts payable	$ 17,855	$ 77,007
DEFERRED INFLOWS OF RESOURCES		
Unavailable revenue - property taxes	2,177	2,192
FUND BALANCE		
Restricted	398,120	360,943
Total liabilities, deferred inflows of resources, and fund balance	$ 418,152	$ 440,142

LINCOLN COUNTY, NEVADA
NONMAJOR MEDICAL INDIGENT SPECIAL REVENUE FUND
SCHEDULE OF REVENUES, EXPENDITURES, AND CHANGES IN FUND BALANCE - BUDGET (GAAP BASIS) AND ACTUAL
Year Ended June 30, 2019
(With Comparative Actual Amounts for Year Ended June 30, 2018)

	2019		Variance - Positive	2018
	Budget	Actual	(Negative)	Actual
Revenues:				
Taxes:				
Property taxes	$ 181,950	$ 183,666	$ 1,716	$ 174,205
Intergovernmental:				
Private car line tax	-	-	-	324
Fish and wildlife	-	201	201	175
Total intergovernmental	-	201	201	499
Miscellaneous:				
Investment income	300	8,200	7,900	160
Total revenues	182,250	192,067	9,817	174,864
Expenditures:				
Current:				
Welfare:				
Service and supplies	394,458	154,890	239,568	137,386
Excess (deficiency) of revenues over expenditures	(212,208)	37,177	249,385	37,478
Fund balance:				
Beginning of year	218,784	360,943	142,159	323,465
End of year	$ 6,576	$ 398,120	$ 391,544	$ 360,943

LINCOLN COUNTY, NEVADA
NONMAJOR CHINA SPRINGS SPECIAL REVENUE FUND
COMPARATIVE BALANCE SHEETS
June 30, 2019 and 2018

	2019	2018
ASSETS		
Pooled cash and investments	$ 1,422	$ 1,069
Taxes receivable	144	140
Due from other governments	2	10
Total assets	$ 1,568	$ 1,219
LIABILITIES		
Accounts payable	$ -	$ -
DEFERRED INFLOWS OF RESOURCES		
Unavailable revenue - property taxes	114	115
FUND BALANCE		
Restricted	1,454	1,104
Total liabilities, deferred inflows of resources, and fund balance	$ 1,568	$ 1,219

LINCOLN COUNTY, NEVADA
NONMAJOR CHINA SPRINGS SPECIAL REVENUE FUND
SCHEDULE OF REVENUES, EXPENDITURES, AND CHANGES
IN FUND BALANCE - BUDGET (GAAP BASIS) AND ACTUAL
Year Ended June 30, 2019
(With Comparative Actual Amounts for Year Ended June 30, 2018)

	2019		Variance - Positive	2018
	Budget	Actual	(Negative)	Actual
Revenues:				
Taxes:				
Property taxes	$ 9,553	$ 9,644	$ 91	$ 9,146
Intergovernmental:				
Private car line	-	-	-	17
Fish and wildlife	-	11	11	9
Total intergovernmental	-	11	11	26
Total revenues	9,553	9,655	102	9,172
Expenditures:				
Current:				
Intergovernmental:				
Services and supplies	19,553	19,305	248	19,176
Excess (deficiency) of revenues over expenditures	(10,000)	(9,650)	350	(10,004)
Other financing sources (uses):				
Operating transfers in	10,000	10,000	-	10,000
Net change in fund balance	-	350	350	(4)
Fund balance:				
Beginning of year	-	1,104	1,104	1,108
End of year	$ -	$ 1,454	$ 1,454	$ 1,104

LINCOLN COUNTY, NEVADA
NONMAJOR AMBULANCE SPECIAL REVENUE FUND
COMPARATIVE BALANCE SHEETS
June 30, 2019 and 2018

	2019	2018
ASSETS		
Pooled cash and investments	$ 27,537	$ 15,363
Interest receivable	29	16
Total assets	$ 27,566	$ 15,379
LIABILITIES		
Accounts payable	$ 2,748	$ 3,996
Accrued payroll and benefits	1,150	1,930
Total liabilities	3,898	5,926
FUND BALANCE		
Committed	23,668	9,453
Total liabilities and fund balance	$ 27,566	$ 15,379

LINCOLN COUNTY, NEVADA
NONMAJOR AMBULANCE SPECIAL REVENUE FUND
SCHEDULE OF REVENUES, EXPENDITURES, AND CHANGES IN FUND BALANCE - BUDGET (GAAP BASIS) AND ACTUAL
Year Ended June 30, 2019
(With Comparative Actual Amounts for Year Ended June 30, 2018)

	2019 Budget	2019 Actual	Variance - Positive (Negative)	2018 Actual
Revenues:				
Charges for services:				
Ambulance fees	$ 110,000	$ 120,597	$ 10,597	$ 80,807
Miscellaneous:				
Investment income	-	259	259	3
Total revenues	110,000	120,856	10,856	80,810
Expenditures:				
Current:				
Health:				
Salaries and wages	37,000	36,260	740	34,920
Employee benefits	10,400	5,850	4,550	5,238
Services and supplies	72,631	64,531	8,100	47,230
Total expenditures	120,031	106,641	13,390	87,388
Excess (deficiency) of revenues over expenditures	(10,031)	14,215	24,246	(6,578)
Net change in fund balance	(10,031)	14,215	24,246	(6,578)
Fund balance:				
Beginning of year	16,031	9,453	(6,578)	16,031
End of year	$ 6,000	$ 23,668	$ 17,668	$ 9,453

LINCOLN COUNTY, NEVADA
NONMAJOR REGIONAL TRANSPORTATION COMMISSION SPECIAL REVENUE FUND
COMPARATIVE BALANCE SHEETS
June 30, 2019 and 2018

	2019	2018
ASSETS		
Pooled cash and investments	$ 641,915	$ 590,718
Interest receivable	1,233	2,865
Due from other governments	32,939	20,963
Total assets	$ 676,087	$ 614,546
LIABILITIES		
Accounts payable	$ 5,750	$ 12,705
Accrued payroll and benefits	63	-
Total liabilities	5,813	12,705
FUND BALANCE		
Restricted	670,274	601,841
Total liabilities and fund balance	$ 676,087	$ 614,546

LINCOLN COUNTY, NEVADA
NONMAJOR REGIONAL TRANSPORTATION COMMISSION SPECIAL REVENUE FUND
SCHEDULE OF REVENUES, EXPENDITURES, AND CHANGES
IN FUND BALANCE - BUDGET (GAAP BASIS) AND ACTUAL
Year Ended June 30, 2019
(With Comparative Actual Amounts for Year Ended June 30, 2018)

	2019 Budget	2019 Actual	Variance - Positive (Negative)	2018 Actual
Revenues:				
Intergovernmental:				
Optional $0.04 gas tax	$ 116,202	$ 119,694	$ 3,492	$ 117,021
Miscellaneous:				
Investment income	2,000	10,876	8,876	593
Total revenues	118,202	130,570	12,368	117,614
Expenditures:				
Current:				
Public works:				
Employee benefits	-	254	(254)	295
Services and supplies	450,000	10,727	439,273	24,166
Capital outlay	-	22,350	(22,350)	38,200
Total expenditures	450,000	33,331	416,669	62,661
Excess (deficiency) of revenues over expenditures	(331,798)	97,239	429,037	54,953
Other financing sources (uses):				
Operating transfers out	-	(28,806)	(28,806)	(106,721)
Net change in fund balance	(331,798)	68,433	400,231	(51,768)
Fund balance:				
Beginning of year	337,797	601,841	264,044	653,609
End of year	$ 5,999	$ 670,274	$ 664,275	$ 601,841

LINCOLN COUNTY, NEVADA
NONMAJOR ROOM TAX SPECIAL REVENUE FUND
COMPARATIVE BALANCE SHEETS
June 30, 2019 and 2018

	2019	2018
ASSETS		
Pooled cash and investments	$ 92,393	$ 75,814
Taxes receivable	9,413	6,456
Total assets	$ 101,806	$ 82,270
LIABILITIES		
Accounts payable	$ 3,384	$ 2,012
Accrued payroll and benefits	438	447
Total liabilities	3,822	2,459
FUND BALANCE		
Restricted	97,984	79,811
Total liabilities and fund balance	$ 101,806	$ 82,270

LINCOLN COUNTY, NEVADA
NONMAJOR ROOM TAX SPECIAL REVENUE FUND
SCHEDULE OF REVENUES, EXPENDITURES AND CHANGES IN FUND BALANCE - BUDGET (GAAP BASIS) AND ACTUAL
Year Ended June 30, 2019
(With Comparative Actual Amounts for Year Ended June 30, 2018)

	2019		Variance - Positive	2018
	Budget	Actual	(Negative)	Actual
Revenues:				
Taxes:				
Room tax	$ 65,000	$ 69,119	$ 4,119	$ 77,201
Expenditures:				
Current:				
Culture and recreation:				
Salaries and wages	3,500	2,800	700	3,360
Employee benefits	900	698	202	860
Services and supplies	44,000	32,569	11,431	48,539
Total culture and recreation	48,400	36,067	12,333	52,759
Intergovernmental:				
Services and supplies	5,500	4,879	621	6,085
Total expenditures	53,900	40,946	12,954	58,844
Excess (deficiency) of revenues over expenditures	11,100	28,173	17,073	18,357
Other financing sources (uses):				
Operating transfers in	12,000	-	(12,000)	-
Operating transfers out	(10,000)	(10,000)	-	(20,000)
	2,000	(10,000)	(12,000)	(20,000)
Net change in fund balance	13,100	18,173	5,073	(1,643)
Fund balance:				
Beginning of year	85,236	79,811	(5,425)	81,454
End of year	$ 98,336	$ 97,984	$ (352)	$ 79,811

LINCOLN COUNTY, NEVADA
NONMAJOR LEGAL AID SERVICES SPECIAL REVENUE FUND
COMPARATIVE BALANCE SHEETS
June 30, 2019 and 2018

	2019	2018
ASSETS		
Pooled cash and investments	$ 577	$ 10,630
LIABILITIES		
Accounts payable	$ 770	$ -
FUND BALANCE		
Restricted	(193)	10,630
Total liabilities and fund balance	$ 577	$ 10,630

LINCOLN COUNTY, NEVADA
NONMAJOR LEGAL AID SERVICES SPECIAL REVENUE FUND
SCHEDULE OF REVENUES, EXPENDITURES, AND CHANGES IN FUND BALANCE - BUDGET (GAAP BASIS) AND ACTUAL
Year Ended June 30, 2019
(With Comparative Actual Amounts for Year Ended June 30, 2018)

	2019 Budget	2019 Actual	Variance - Positive (Negative)	2018 Actual
Revenues:				
Charges for services:				
Other	$ 2,000	$ 1,743	$ (257)	$ 1,899
Expenditures:				
Current:				
Judicial:				
Services and supplies	16,571	12,566	4,005	4,540
Excess (deficiency) of revenues over expenditures	(14,571)	(10,823)	3,748	(2,641)
Fund balance:				
Beginning of year	14,571	10,630	(3,941)	13,271
End of year	$ -	$ (193)	$ (193)	$ 10,630

LINCOLN COUNTY, NEVADA
NONMAJOR FORENSIC SERVICES SPECIAL REVENUE FUND
COMPARATIVE BALANCE SHEETS
June 30, 2019 and 2018

	2019	2018
ASSETS		
Pooled cash and investments	$ 8,628	$ 8,035
LIABILITIES		
Accounts payable	$ 125	$ 275
FUND BALANCE		
Restricted	8,503	7,760
Total liabilities and fund balance	$ 8,628	$ 8,035

LINCOLN COUNTY, NEVADA
NONMAJOR FORENSIC SERVICES SPECIAL REVENUE FUND
SCHEDULE OF REVENUES, EXPENDITURES, AND CHANGES IN FUND BALANCE - BUDGET (GAAP BASIS) AND ACTUAL
Year Ended June 30, 2019
(With Comparative Actual Amounts for Year Ended June 30, 2018)

	2019 Budget	2019 Actual	Variance - Positive (Negative)	2018 Actual
Revenues:				
Charges for services:				
Other	$ 2,500	$ 2,066	$ (434)	$ 1,146
Expenditures:				
Current:				
Public safety:				
Service and supplies	10,500	1,323	9,177	1,130
Excess (deficiency) of revenues over expenditures	(8,000)	743	8,743	16
Fund balance:				
Beginning of year	8,000	7,760	(240)	7,744
End of year	$ -	$ 8,503	$ 8,503	$ 7,760

LINCOLN COUNTY, NEVADA
NONMAJOR ADMINISTRATIVE ASSESSMENT SPECIAL REVENUE FUND
COMPARATIVE BALANCE SHEETS
June 30, 2019 and 2018

	2019	2018
ASSETS		
Pooled cash and investments	$ 110,998	$ 89,792
Interest receivable	219	158
Total assets	$ 111,217	$ 89,950
LIABILITIES		
Accounts payable	$ 100	$ 7,000
FUND BALANCE		
Restricted	111,117	82,950
Total liabilities and fund balance	$ 111,217	$ 89,950

LINCOLN COUNTY, NEVADA
NONMAJOR ADMINISTRATIVE ASSESSMENT SPECIAL REVENUE FUND
SCHEDULE OF REVENUES, EXPENDITURES, AND CHANGES
IN FUND BALANCE - BUDGET (GAAP BASIS) AND ACTUAL
Year Ended June 30, 2019
(With Comparative Actual Amounts for Year Ended June 30, 2018)

	2019 Budget	2019 Actual	Variance - Positive (Negative)	2018 Actual
Revenues:				
Fines and forfeitures:				
Administrative assessments	$ 34,000	$ 44,819	$ 10,819	$ 36,677
Miscellaneous:				
Investment income	160	1,939	1,779	33
Total revenues	34,160	46,758	12,598	36,710
Expenditures:				
Current:				
Judicial:				
Services and supplies	102,765	9,808	92,957	8,464
Capital outlay	-	8,783	(8,783)	40,328
Total expenditures	102,765	18,591	84,174	48,792
Excess (deficiency) of revenues over expenditures	(68,605)	28,167	96,772	(12,082)
Fund balance:				
Beginning of year	78,593	82,950	4,357	95,032
End of year	$ 9,988	$ 111,117	$ 101,129	$ 82,950

LINCOLN COUNTY, NEVADA
NONMAJOR FORFEITURE SPECIAL REVENUE FUND
COMPARATIVE BALANCE SHEETS
June 30, 2019 and 2018

	2019	2018
ASSETS		
Pooled cash and investments	$ 51,215	$ 48,458
Interest receivable	120	88
Due from other governments	-	9,974
Total assets	$ 51,335	$ 58,520
LIABILITIES		
Accounts payable	$ -	$ -
FUND BALANCE		
Restricted	51,335	58,520
Total liabilities and fund balance	$ 51,335	$ 58,520

LINCOLN COUNTY, NEVADA
NONMAJOR FORFEITURE SPECIAL REVENUE FUND
SCHEDULE OF REVENUES, EXPENDITURES, AND CHANGES IN FUND BALANCE - BUDGET (GAAP BASIS) AND ACTUAL
Year Ended June 30, 2019
(With Comparative Actual Amounts for Year Ended June 30, 2018)

	2019 Budget	2019 Actual	Variance-Positive (Negative)	2018 Actual
Revenues:				
Fines and forfeitures:				
Other	$ 30,000	$ -	$ (30,000)	$ 22,577
Miscellaneous:				
Investment income	-	1,061	1,061	19
Total revenues	30,000	1,061	(28,939)	22,596
Expenditures:				
Current:				
Public safety:				
Services and supplies	66,138	8,246	57,892	2,005
Capital outlay	-	-	-	13,209
Total expenditures	66,138	8,246	57,892	15,214
Excess (deficiency) of revenues over expenditures	(36,138)	(7,185)	28,953	7,382
Fund balance:				
Beginning of year	36,138	58,520	22,382	51,138
End of year	$ -	$ 51,335	$ 51,335	$ 58,520

LINCOLN COUNTY, NEVADA
NONMAJOR RECORDER TECHNOLOGY SPECIAL REVENUE FUND
COMPARATIVE BALANCE SHEETS
June 30, 2019 and 2018

	2019	2018
ASSETS		
Pooled cash and investments	$ 23,444	$ 15,994
Interest receivable	46	29
Total assets	$ 23,490	$ 16,023
LIABILITIES		
Accounts payable	$ -	$ -
FUND BALANCE		
Restricted	23,490	16,023
Total liabilities and fund balance	$ 23,490	$ 16,023

LINCOLN COUNTY, NEVADA
NONMAJOR RECORDER TECHNOLOGY SPECIAL REVENUE FUND
SCHEDULE OF REVENUES, EXPENDITURES, AND CHANGES
IN FUND BALANCE - BUDGET (GAAP BASIS) AND ACTUAL
Year Ended June 30, 2019
(With Comparative Actual Amounts for Year Ended June 30, 2018)

	2019 Budget	2019 Actual	Variance-Positive (Negative)	2018 Actual
Revenues:				
Charges for services:				
User fees	$ 6,000	$ 7,065	$ 1,065	$ 10,688
Miscellaneous:				
Investment income	-	402	402	6
Total revenues	6,000	7,467	1,467	10,694
Expenditures:				
Current:				
General government:				
Services and supplies	16,000	-	16,000	2,200
Excess (deficiency) of revenues over expenditures	(10,000)	7,467	17,467	8,494
Fund balance:				
Beginning of year	10,029	16,023	5,994	7,529
End of year	$ 29	$ 23,490	$ 23,461	$ 16,023

LINCOLN COUNTY, NEVADA
NONMAJOR L.C. HOUSING AUTHORITY SPECIAL REVENUE FUND
COMPARATIVE BALANCE SHEETS
June 30, 2019 and 2018

	2019	2018
ASSETS		
Pooled cash and investments	$ 20,496	$ 33,149
Interest receivable	44	56
Total assets	$ 20,540	$ 33,205
LIABILITIES		
Accounts payable	$ 521	$ 1,058
Accrued payroll and benefits	205	284
Total liabilities	726	1,342
FUND BALANCE		
Restricted	19,814	31,863
Total liabilities and fund balance	$ 20,540	$ 33,205

LINCOLN COUNTY, NEVADA
NONMAJOR L. C. HOUSING AUTHORITY SPECIAL REVENUE FUND
SCHEDULE OF REVENUES, EXPENDITURES, AND CHANGES
IN FUND BALANCE - BUDGET (GAAP BASIS) AND ACTUAL
Year Ended June 30, 2019
(With Comparative Actual Amounts for Year Ended June 30, 2018)

	2019		Variance - Positive	2018
	Budget	Actual	(Negative)	Actual
Revenues:				
Miscellaneous:				
Rent	$ 35,000	$ 33,630	$ (1,370)	$ 36,760
Investment income	-	389	389	12
Total revenues	35,000	34,019	(981)	36,772
Expenditures:				
Current:				
Community support:				
Salaries and wages	30,420	24,555	5,865	19,910
Employee benefits	3,736	2,986	750	2,672
Services and supplies	32,707	18,527	14,180	13,491
Total expenditures	66,863	46,068	20,795	36,073
Excess (deficiency) of revenues over expenditures	(31,863)	(12,049)	19,814	699
Fund balance:				
Beginning of year	31,863	31,863	-	31,164
End of year	$ -	$ 19,814	$ 19,814	$ 31,863

LINCOLN COUNTY, NEVADA
NONMAJOR ALAMO CLINIC SPECIAL REVENUE FUND
COMPARATIVE BALANCE SHEETS
June 30, 2019 and 2018

	2019	2018
ASSETS		
Pooled cash and investments	$ 10,982	$ 233
Taxes receivable	1,455	1,418
Due from other governments	-	92
Total assets	$ 12,437	$ 1,743
LIABILITIES		
Accounts payable	$ 10,787	$ 326
DEFERRED INFLOWS OF RESOURCES		
Unavailable revenue - property taxes	1,154	1,164
FUND BALANCE		
Restricted	496	253
Total liabilities, deferred inflows of resources, and fund balance	$ 12,437	$ 1,743

LINCOLN COUNTY, NEVADA
NONMAJOR ALAMO CLINIC SPECIAL REVENUE FUND
SCHEDULE OF REVENUES, EXPENDITURES, AND CHANGES IN FUND BALANCE -BUDGET (GAAP BASIS) AND ACTUAL
Year Ended June 30, 2019
(With Comparative Actual Amounts for Year Ended June 30, 2018)

	2019 Budget	2019 Actual	Variance - Positive (Negative)	2018 Actual
Revenues:				
Taxes:				
Property taxes	$ 128,862	$ 97,575	$ (31,287)	$ 92,548
Intergovernmental:				
Private car line	-	-	-	172
Fish and wildlife	-	107	107	93
Total intergovernmental	-	107	107	265
Total revenues	128,862	97,682	(31,180)	92,813
Expenditures:				
Current:				
Health:				
Services and supplies	128,862	97,439	31,423	93,157
Excess (deficiency) of revenues over expenditures	-	243	243	(344)
Fund balance:				
Beginning of year	597	253	(344)	597
End of year	$ 597	$ 496	$ (101)	$ 253

LINCOLN COUNTY, NEVADA
NONMAJOR FAIR BOARD SPECIAL REVENUE FUND
COMPARATIVE BALANCE SHEETS
June 30, 2019 and 2018

	2019	2018
ASSETS		
Pooled cash and investments	$ 19,773	$ 20,161
Interest receivable	25	34
Due from other government	-	100
Total assets	$ 19,798	$ 20,295
LIABILITIES		
Accounts payable	$ -	$ 177
FUND BALANCE		
Restricted	19,798	20,118
Total liabilities and fund balance	$ 19,798	$ 20,295

LINCOLN COUNTY, NEVADA
NONMAJOR FAIR BOARD SPECIAL REVENUE FUND
SCHEDULE OF REVENUES, EXPENDITURES, AND CHANGES
IN FUND BALANCE - BUDGET (GAAP BASIS) AND ACTUAL
Year Ended June 30, 2019
(With Comparative Actual Amounts for Year Ended June 30, 2018)

	2019 Budget	2019 Actual	Variance - Positive (Negative)	2018 Actual
Revenues:				
Miscellaneous:				
Investment income	$ -	$ 216	$ 216	$ 7
Fees	33,697	31,818	(1,879)	24,342
Donations	-	100	100	1,815
Total revenues	33,697	32,134	(1,563)	26,164
Expenditures:				
Current:				
Culture and recreation:				
Parks:				
Services and supplies	53,697	42,454	11,243	40,017
Excess (deficiency) of revenues over expenditures	(20,000)	(10,320)	9,680	(13,853)
Other financing sources (uses):				
Operating transfers in	10,000	10,000	-	20,000
Net change in fund balance	(10,000)	(320)	9,680	6,147
Fund balance:				
Beginning of year	10,000	20,118	10,118	13,971
End of year	$ -	$ 19,798	$ 19,798	$ 20,118

LINCOLN COUNTY, NEVADA
NONMAJOR MULTI-SPECIES HABITAT CONSERVATION SPECIAL REVENUE FUND
COMPARATIVE BALANCE SHEETS
June 30, 2019 and 2018

	2019	2018
ASSETS		
Pooled cash and investments	$ 16,909	$ 21,105
Interest receivable	40	40
Total assets	$ 16,949	$ 21,145
LIABILITIES		
Accounts payable	$ 621	$ -
Unearned revenue	16,328	21,145
Total liabilities	16,949	21,145
FUND BALANCE		
Restricted	-	-
Total liabilities and fund balance	$ 16,949	$ 21,145

LINCOLN COUNTY, NEVADA
NONMAJOR MULTI-SPECIES HABITAT CONSERVATION SPECIAL REVENUE FUND
SCHEDULE OF REVENUES, EXPENDITURES, AND CHANGES
IN FUND BALANCE - BUDGET (GAAP BASIS) AND ACTUAL
Year Ended June 30, 2019
(With Comparative Actual Amounts for Year Ended June 30, 2018)

	2019 Budget	2019 Actual	Variance - Positive (Negative)	2018 Actual
Revenues:				
Intergovernmental:				
Grants	$ 22,133	$ 4,818	$ (17,315)	$ 2,247
Miscellaneous:				
Investment income	-	351	351	8
Total revenues	22,133	5,169	(16,964)	2,255
Expenditures:				
Current:				
General government:				
Services and supplies	22,133	5,169	16,964	2,255
Excess (deficiency) of revenues over expenditures	-	-	-	-
Fund balance:				
Beginning of year	-	-	-	-
End of year	$ -	$ -	$ -	$ -

LINCOLN COUNTY, NEVADA
NONMAJOR MULTI-SPECIES HABITAT CONSERVATION SEC. 7 SPECIAL REVENUE FUND
COMPARATIVE BALANCE SHEETS
June 30, 2019 and 2018

	2019	2018
ASSETS		
Pooled cash and investments	$ 877,978	$ 861,358
Interest receivable	1,930	1,523
Total assets	$ 879,908	$ 862,881
LIABILITIES		
Accounts payable	$ -	$ -
FUND BALANCE		
Restricted	879,908	862,881
Total liabilities and fund balance	$ 879,908	$ 862,881

LINCOLN COUNTY, NEVADA
NONMAJOR MULTI-SPECIES HABITAT CONSERVATION SEC. 7 SPECIAL REVENUE FUND
SCHEDULE OF REVENUES, EXPENDITURES, AND CHANGES
IN FUND BALANCE - BUDGET (GAAP BASIS) AND ACTUAL
Year Ended June 30, 2019
(With Comparative Actual Amounts for Year Ended June 30, 2018)

	2019		Variance - Positive	2018
	Budget	Actual	(Negative)	Actual
Revenues:				
Miscellaneous:				
Investment income	$ 1,500	$ 17,027	$ 15,527	$ 315
Expenditures:				
Current:				
General government:				
Services and supplies	869,066	-	869,066	-
Excess (deficiency) of revenues over expenditures	(867,566)	17,027	884,593	315
Fund balance:				
Beginning of year	867,566	862,881	(4,685)	862,566
End of year	$ -	$ 879,908	$ 879,908	$ 862,881

LINCOLN COUNTY, NEVADA
NONMAJOR YOUTH ACTIVITIES COUNSEL SPECIAL REVENUE FUND
COMPARATIVE BALANCE SHEETS
June 30, 2019 and 2018

	2019	2018
ASSETS		
Pooled cash and investments	$ 6,007	$ 6,007
LIABILITIES		
Accrued payroll and benefits	$ -	$ -
FUND BALANCE		
Restricted	6,007	6,007
Total liabilities and fund balance	$ 6,007	$ 6,007

LINCOLN COUNTY, NEVADA
NONMAJOR YOUTH ACTIVITIES COUNSEL SPECIAL REVENUE FUND
SCHEDULE OF REVENUES, EXPENDITURES, AND CHANGES
IN FUND BALANCE - BUDGET (GAAP BASIS) AND ACTUAL
Year Ended June 30, 2019
(With Comparative Actual Amounts for Year Ended June 30, 2018)

	2019		Variance - Positive	2018
	Budget	Actual	(Negative)	Actual
Revenues:				
Miscellaneous:	$ -	$ -	$ -	$ -
Expenditures:				
Current:				
Community support:				
Services and supplies	6,007	-	6,007	-
Excess (deficiency) of revenues over expenditures	(6,007)	-	6,007	-
Fund balance:				
Beginning of year	6,007	6,007	-	6,007
End of year	$ -	$ 6,007	$ 6,007	$ 6,007

LINCOLN COUNTY, NEVADA
NONMAJOR GENETIC MARKER TESTING SPECIAL REVENUE FUND
COMPARATIVE BALANCE SHEETS
June 30, 2019 and 2018

	2019	2018
ASSETS		
Pooled cash and investments	$ 4,285	$ 3,192
LIABILITIES		
Accounts payable	$ 4,285	$ 1,850
FUND BALANCE		
Restricted	-	1,342
Total liabilities and fund balance	$ 4,285	$ 3,192

LINCOLN COUNTY, NEVADA
NONMAJOR GENETIC MARKER TESTING SPECIAL REVENUE FUND
SCHEDULE OF REVENUES, EXPENDITURES, AND CHANGES
IN FUND BALANCE - BUDGET (GAAP BASIS) AND ACTUAL
Year Ended June 30, 2019
(With Comparative Actual Amounts for Year Ended June 30, 2018)

	2019 Budget	2019 Actual	Variance - Positive (Negative)	2018 Actual
Revenues:				
Charges for services:				
Other	$ 17,300	$ 15,348	$ (1,952)	$ 12,227
Expenditures:				
Current:				
General government:				
Services and supplies	18,753	16,690	2,063	12,338
Excess (deficiency) of revenues over expenditures	(1,453)	(1,342)	111	(111)
Fund balance:				
Beginning of year	1,453	1,342	(111)	1,453
End of year	$ -	$ -	$ -	$ 1,342

LINCOLN COUNTY, NEVADA
NONMAJOR PUBLIC IMPROVEMENT SPECIAL REVENUE FUND
COMPARATIVE BALANCE SHEETS
June 30, 2019 and 2018

	2019	2018
ASSETS		
Pooled cash and investments	$ 145,081	$ 142,335
Interest receivable	319	254
Total assets	$ 145,400	$ 142,589
FUND BALANCE		
Restricted	$ 145,400	$ 142,589

LINCOLN COUNTY, NEVADA
NONMAJOR PUBLIC IMPROVEMENT SPECIAL REVENUE FUND
SCHEDULE OF REVENUES, EXPENDITURES, AND CHANGES
IN FUND BALANCE - BUDGET (GAAP BASIS) AND ACTUAL
Year Ended June 30, 2019
(With Comparative Actual Amounts for Year Ended June 30, 2018)

	2019		Variance - Positive	2018
	Budget	Actual	(Negative)	Actual
Revenues:				
Miscellaneous:				
Interest	$ -	$ 2,811	$ 2,811	$ 52
Expenditures:				
Current:				
Public works:				
Services and supplies	142,537	-	142,537	-
Excess (deficiency) of revenues over expenditures	(142,537)	2,811	145,348	52
Fund balance:				
Beginning of year	142,537	142,589	52	142,537
End of year	$ -	$ 145,400	$ 145,400	$ 142,589

LINCOLN COUNTY, NEVADA
NONMAJOR AIRPORT SPECIAL REVENUE FUND
COMPARATIVE BALANCE SHEETS
June 30, 2019 and 2018

	2019	2018
ASSETS		
Pooled cash and investments	$ 1,036	$ 259
Due from other governments	-	120
Total assets	$ 1,036	$ 379
LIABILITIES		
Accounts payable	$ 514	$ 648
FUND BALANCE		
Committed	522	(269)
Total liabilities and fund balance	$ 1,036	$ 379

LINCOLN COUNTY, NEVADA
NONMAJOR AIRPORT SPECIAL REVENUE FUND
SCHEDULE OF REVENUES, EXPENDITURES, AND CHANGES IN FUND BALANCE - BUDGET (GAAP BASIS) AND ACTUAL
Year Ended June 30, 2019
(With Comparative Actual Amounts for Year Ended June 30, 2018)

	2019		Variance - Positive	2018
	Budget	Actual	(Negative)	Actual
Revenues:				
Charges for services:				
Airport fees	$ 400	$ 19,140	$ 18,740	$ 1,180
Miscellaneous:				
Rents	12,750	7,600	(5,150)	7,318
Other	17,000	-	(17,000)	-
Total miscellaneous	29,750	7,600	(22,150)	7,318
Total revenues	30,150	26,740	(3,410)	8,498
Expenditures:				
Current:				
Public works:				
Employee benefits	450	423	27	493
Services and supplies	33,000	25,526	7,474	8,300
Total expenditures	33,450	25,949	7,501	8,793
Excess (deficiency) of revenues over expenditures	(3,300)	791	4,091	(295)
Fund balance:				
Beginning of year	3,376	(269)	(3,645)	26
End of year	$ 76	$ 522	$ 446	$ (269)

LINCOLN COUNTY, NEVADA
NONMAJOR PANACA TOWN BUILDING SPECIAL REVENUE FUND
COMPARATIVE BALANCE SHEETS
June 30, 2019 and 2018

	2019	2018
ASSETS		
Pooled cash and investments	$ 56,265	$ 44,706
Interest receivable	116	82
Total assets	$ 56,381	$ 44,788
LIABILITIES		
Accounts payable	$ -	$ -
FUND BALANCE		
Committed	56,381	44,788
Total liabilities and fund balance	$ 56,381	$ 44,788

LINCOLN COUNTY, NEVADA
NONMAJOR PANACA TOWN BUILDING SPECIAL REVENUE FUND
SCHEDULE OF REVENUES, EXPENDITURES, AND CHANGES
IN FUND BALANCE - BUDGET (GAAP BASIS) AND ACTUAL
Year Ended June 30, 2019
(With Comparative Actual Amounts for Year Ended June 30, 2018)

	2019 Budget	2019 Actual	Variance - Positive (Negative)	2018 Actual
Revenues:				
Miscellaneous:				
Rent	$ 10,500	$ 10,569	$ 69	$ 10,569
Investment income	-	1,024	1,024	17
Total revenues	10,500	11,593	1,093	10,586
Expenditures:				
Current:				
General government:				
Capital outlay	24,000	-	24,000	-
Excess (deficiency) of revenues over expenditures	(13,500)	11,593	25,093	10,586
Fund balance:				
Beginning of year	28,602	44,788	16,186	34,202
End of year	$ 15,102	$ 56,381	$ 41,279	$ 44,788

LINCOLN COUNTY, NEVADA
NONMAJOR COURT FACILITY FEES SPECIAL REVENUE FUND
COMPARATIVE BALANCE SHEETS
June 30, 2019 and 2018

	2019	2018
ASSETS		
Pooled cash and investments	$ 111,466	$ 71,427
Interest receivable	214	113
Total assets	$ 111,680	$ 71,540
LIABILITIES		
Accounts payable	$ -	$ 2,500
FUND BALANCE		
Restricted	111,680	69,040
Total liabilities and fund balance	$ 111,680	$ 71,540

LINCOLN COUNTY, NEVADA
NONMAJOR COURT FACILITY FEES SPECIAL REVENUE FUND
SCHEDULE OF REVENUES, EXPENDITURES, AND CHANGES
IN FUND BALANCE - BUDGET (GAAP BASIS) AND ACTUAL
Year Ended June 30, 2019
(With Comparative Actual Amounts for Year Ended June 30, 2018)

	2019 Budget	2019 Actual	Variance - Positive (Negative)	2018 Actual
Revenues:				
Charges for services:				
Other	$ 45,000	$ 49,189	$ 4,189	$ 40,011
Miscellaneous:				
Investment income	-	1,882	1,882	25
Total revenues	45,000	51,071	6,071	40,036
Expenditures:				
Current:				
Judicial:				
Service and supplies	-	1,231	(1,231)	-
Capital outlay	96,000	7,200	88,800	102,187
Total expenditures	96,000	8,431	87,569	102,187
Excess (deficiency) of revenues over expenditures	(51,000)	42,640	93,640	(62,151)
Fund balance:				
Beginning of year	56,191	69,040	12,849	131,191
End of year	$ 5,191	$ 111,680	$ 106,489	$ 69,040

LINCOLN COUNTY, NEVADA
NONMAJOR TRI-COUNTY WEED CONTROL SPECIAL REVENUE FUND
COMPARATIVE BALANCE SHEETS
June 30, 2019 and June 30, 2018

	2019	2018
ASSETS		
Pooled cash and investments	$ 249,082	$ 249,375
Interest receivable	646	399
Total assets	$ 249,728	$ 249,774
LIABILITIES		
Accounts payable	$ 56,390	$ 26,503
Accrued payroll and benefits	21,339	32,433
Total liabilities	77,729	58,936
FUND BALANCE		
Restricted	171,999	190,838
Total liabilities and fund balance	$ 249,728	$ 249,774

LINCOLN COUNTY, NEVADA
NONMAJOR TRI-COUNTY WEED CONTROL SPECIAL REVENUE FUND
SCHEDULE OF REVENUES, EXPENDITURES, AND CHANGES
IN FUND BALANCE - BUDGET (GAAP BASIS) AND ACTUAL
Year Ended June 30, 2019
(With Comparative Actual Amounts for Year Ended June 30, 2018)

	2019 Budget	2019 Actual	Variance - Positive (Negative)	2018 Actual
Revenues:				
Charges for services:				
Weed control	$ 1,100,000	$ 843,872	$ (256,128)	$ 789,559
Miscellaneous:				
Investment income	400	5,696	5,296	82
Total revenues	1,100,400	849,568	(250,832)	789,641
Expenditures:				
Current:				
General government:				
Salaries and wages	409,150	284,065	125,085	301,082
Employee benefits	150,387	89,861	60,526	102,808
Services and supplies	550,000	494,481	55,519	358,820
Capital outlay	150,000	-	150,000	24,331
Total expenditures	1,259,537	868,407	391,130	787,041
Excess (deficiency) of revenues over expenditures	(159,137)	(18,839)	140,298	2,600
Fund balance:				
Beginning of year	160,101	190,838	30,737	188,238
End of year	$ 964	$ 171,999	$ 171,035	$ 190,838

LINCOLN COUNTY, NEVADA
NONMAJOR LINCOLN COUNTY LAND ACT
GENERAL SPECIAL REVENUE FUND
COMPARATIVE BALANCE SHEETS
June 30, 2019 and 2018

	2019	2018
ASSETS		
Pooled cash and investments	$ 6,693	$ 6,566
Interest receivable	15	9
Total assets	$ 6,708	$ 6,575
FUND BALANCE		
Committed	$ 6,708	$ 6,575

LINCOLN COUNTY, NEVADA
NONMAJOR LINCOLN COUNTY LAND ACT
GENERAL SPECIAL REVENUE FUND
SCHEDULE OF REVENUES, EXPENDITURES, AND CHANGES IN FUND BALANCE - BUDGET (GAAP BASIS) AND ACTUAL
Year Ended June 30, 2019
(With Comparative Actual Amounts for Year Ended June 30, 2018)

	2019			
	Budget	Actual	Variance - Positive (Negative)	2018 Actual
Revenues:				
Miscellaneous:				
Investment income	$ -	$ 133	$ 133	$ 2
Expenditures:				
Current:				
General government:				
Services and supplies	6,573	-	6,573	-
Excess (deficiency) of revenues over expenditures	(6,573)	133	6,706	2
Fund balance:				
Beginning of year	6,573	6,575	2	6,573
End of year	$ -	$ 6,708	$ 6,708	$ 6,575

LINCOLN COUNTY, NEVADA
NONMAJOR LINCOLN COUNTY LAND ACT
PLANNING AND DEVELOPMENT SPECIAL REVENUE FUND
COMPARATIVE BALANCE SHEETS
June 30, 2019 and 2018

	2019	2018
ASSETS		
Pooled cash and investments	$ 681	$ 668
Interest receivable	2	-
Total assets	$ 683	$ 668
LIABILITIES		
Accounts payable	$ -	$ -
FUND BALANCE		
Committed	683	668
Total liabilities and fund balance	$ 683	$ 668

LINCOLN COUNTY, NEVADA
NONMAJOR LINCOLN COUNTY LAND ACT
PLANNING AND DEVELOPMENT SPECIAL REVENUE FUND
SCHEDULE OF REVENUES, EXPENDITURES, AND CHANGES
IN FUND BALANCE - BUDGET (GAAP BASIS) AND ACTUAL
Year Ended June 30, 2019
(With Comparative Actual Amounts for Year Ended June 30, 2018)

	2019			
	Budget	Actual	Variance - Positive (Negative)	2018 Actual
Revenues:				
Miscellaneous:				
Investment income	$ 100	$ 15	$ (85)	$ -
Expenditures:				
Current:				
General government:				
Services and supplies	-	-	-	-
Net change in fund balance	100	15	(85)	-
Fund balance:				
Beginning of year	668	668	-	668
End of year	$ 768	$ 683	$ (85)	$ 668

LINCOLN COUNTY, NEVADA
NONMAJOR LINCOLN COUNTY LAND ACT
EDUCATION SPECIAL REVENUE FUND
COMPARATIVE BALANCE SHEETS
June 30, 2019 and 2018

	2019	2018
ASSETS		
Pooled cash and investments	$ 126,986	$ 124,582
Interest receivable	279	219
Total assets	$ 127,265	$ 124,801
LIABILITIES		
Accounts payable	$ -	$ -
FUND BALANCE		
Committed	127,265	124,801
Total liabilities and fund balance	$ 127,265	$ 124,801

LINCOLN COUNTY, NEVADA
NONMAJOR LINCOLN COUNTY LAND ACT
EDUCATION SPECIAL REVENUE FUND
SCHEDULE OF REVENUES, EXPENDITURES, AND CHANGES
IN FUND BALANCE - BUDGET (GAAP BASIS) AND ACTUAL
Year Ended June 30, 2019
(With Comparative Actual Amounts for Year Ended June 30, 2018)

	2019			
	Budget	Actual	Variance - Positive (Negative)	2018 Actual
Revenues:				
Miscellaneous:				
Investment income	$ -	$ 2,464	$ 2,464	$ 46
Expenditures:				
Current:				
General government:				
Services and supplies	124,755	-	124,755	-
Excess (deficiency) of revenues over expenditures	(124,755)	2,464	127,219	46
Fund balance:				
Beginning of year	124,755	124,801	46	124,755
End of year	$ -	$ 127,265	$ 127,265	$ 124,801

LINCOLN COUNTY, NEVADA
NONMAJOR LINCOLN COUNTY LAND ACT
GRANT MATCH SPECIAL REVENUE FUND
COMPARATIVE BALANCE SHEETS
June 30, 2019 and 2018

	2019	2018
ASSETS		
Pooled cash and investments	$ 151	$ 151
FUND BALANCE		
Committed	$ 151	$ 151

LINCOLN COUNTY, NEVADA
NONMAJOR LINCOLN COUNTY LAND ACT
GRANT MATCH SPECIAL REVENUE FUND
SCHEDULE OF REVENUES, EXPENDITURES, AND CHANGES
IN FUND BALANCE - BUDGET (GAAP BASIS) AND ACTUAL
Year Ended June 30, 2019
(With Comparative Actual Amounts for Year Ended June 30, 2018)

	2019			
	Budget	Actual	Variance - Positive (Negative)	2018 Actual
Revenues:				
Miscellaneous:				
Investment income	$ -	$ -	$ -	$ -
Expenditures:				
Current:				
General government:				
Services and supplies	151	-	151	-
Excess (deficiency) of revenues over expenditures	(151)	-	151	-
Fund balance:				
Beginning of year	151	151	-	151
End of year	$ -	$ 151	$ 151	$ 151

LINCOLN COUNTY, NEVADA
NONMAJOR LINCOLN COUNTY WATER
GENERAL SPECIAL REVENUE FUND
COMPARATIVE BALANCE SHEETS
June 30, 2019 and 2018

	2019	2018
ASSETS		
Pooled cash and investments	$ 616	$ 604
Interest receivable	2	4
Total assets	$ 618	$ 608
LIABILITIES		
Accounts payable	$ -	$ -
FUND BALANCE		
Committed	618	608
Total liabilities and fund balance	$ 618	$ 608

LINCOLN COUNTY, NEVADA
NONMAJOR LINCOLN COUNTY WATER
GENERAL SPECIAL REVENUE FUND
SCHEDULE OF REVENUES, EXPENDITURES, AND CHANGES
IN FUND BALANCE - BUDGET (GAAP BASIS) AND ACTUAL
Year Ended June 30, 2019
(With Comparative Actual Amounts for Year Ended June 30, 2018)

	2019		Variance - Positive	2018
	Budget	Actual	(Negative)	Actual
Revenues:				
Miscellaneous:				
Investment income	$ -	$ 10	$ 10	$ 2
Expenditures:				
Current:				
General government:				
Services and supplies	-	-	-	-
Net change in fund balance	-	10	10	2
Fund balance:				
Beginning of year	606	608	2	606
End of year	$ 606	$ 618	$ 12	$ 608

LINCOLN COUNTY, NEVADA
NONMAJOR LINCOLN COUNTY WATER
SPECIAL PROJECTS SPECIAL REVENUE FUND
COMPARATIVE BALANCE SHEETS
June 30, 2019 and 2018

	2019	2018
ASSETS		
Pooled cash and investments	$ 8,546	$ 8,384
Interest receivable	19	14
Total assets	$ 8,565	$ 8,398
FUND BALANCE		
Committed	$ 8,565	$ 8,398

LINCOLN COUNTY, NEVADA
NONMAJOR LINCOLN COUNTY WATER
SPECIAL PROJECTS SPECIAL REVENUE FUND
SCHEDULE OF REVENUES, EXPENDITURES, AND CHANGES
IN FUND BALANCE - BUDGET (GAAP BASIS) AND ACTUAL
Year Ended June 30, 2019
(With Comparative Actual Amounts for Year Ended June 30, 2018)

	2019			
	Budget	Actual	Variance - Positive (Negative)	2018 Actual
Revenues:				
Miscellaneous:				
Investment income	$ -	$ 167	$ 167	$ 3
Expenditures:				
Current:				
General government:				
Services and supplies	8,395	-	8,395	-
Excess (deficiency) of revenues over expenditures	(8,395)	167	8,562	3
Fund balance:				
Beginning of year	8,395	8,398	3	8,395
End of year	$ -	$ 8,565	$ 8,565	$ 8,398

LINCOLN COUNTY, NEVADA
NONMAJOR LINCOLN COUNTY WATER
PLANNING AND DEVELOPMENT SPECIAL REVENUE FUND
COMPARATIVE BALANCE SHEETS
June 30, 2019 and 2018

	2019	2018
ASSETS		
Pooled cash and investments	$ 84,771	$ 83,166
Interest receivable	186	148
Total assets	$ 84,957	$ 83,314
FUND BALANCE		
Committed	$ 84,957	$ 83,314

LINCOLN COUNTY, NEVADA
NONMAJOR LINCOLN COUNTY WATER
PLANNING AND DEVELOPMENT SPECIAL REVENUE FUND
SCHEDULE OF REVENUES, EXPENDITURES, AND CHANGES
IN FUND BALANCE - BUDGET (GAAP BASIS) AND ACTUAL
Year Ended June 30, 2019
(With Comparative Actual Amounts for Year Ended June 30, 2018)

	2019			
	Budget	Actual	Variance - Positive (Negative)	2018 Actual
Revenues:				
Miscellaneous:				
Investment income	$ 50	$ 1,643	$ 1,593	$ 30
Expenditures:				
Current:				
General government:				
Services and supplies	83,384	-	83,384	-
Net change in fund balance	(83,334)	1,643	84,977	30
Fund balance:				
Beginning of year	83,334	83,314	(20)	83,284
End of year	$ -	$ 84,957	$ 84,957	$ 83,314

LINCOLN COUNTY, NEVADA
NONMAJOR LINCOLN COUNTY WATER SPECIAL USE SPECIAL REVENUE FUND
COMPARATIVE BALANCE SHEETS
June 30, 2019 and 2018

	2019	2018
ASSETS		
Pooled cash and investments	$ 1,196,429	$ 1,163,802
Interest receivable	2,629	2,064
Interfund receivable	180,000	190,000
Total assets	$ 1,379,058	$ 1,355,866
FUND BALANCE		
Committed	$ 1,379,058	$ 1,355,866

LINCOLN COUNTY, NEVADA
NONMAJOR LINCOLN COUNTY WATER SPECIAL USE SPECIAL REVENUE FUND
SCHEDULE OF REVENUES, EXPENDITURES, AND CHANGES
IN FUND BALANCE - BUDGET (GAAP BASIS) AND ACTUAL
Year Ended June 30, 2019
(With Comparative Actual Amounts for Year Ended June 30, 2018)

	2019		Variance - Positive	2018
	Budget	Actual	(Negative)	Actual
Revenues:				
Miscellaneous:				
Investment income	$ 500	$ 23,192	$ 22,692	$ 425
Expenditures:				
Current:				
General government:				
Services and supplies	1,356,441	-	1,356,441	-
Excess (deficiency) of revenues over expenditures	(1,355,941)	23,192	1,379,133	425
Fund balance:				
Beginning of year	1,355,941	1,355,866	(75)	1,355,441
End of year	$ -	$ 1,379,058	$ 1,379,058	$ 1,355,866

LINCOLN COUNTY, NEVADA
NONMAJOR LINCOLN COUNTY WATER
GRANT MATCH SPECIAL REVENUE FUND
COMPARATIVE BALANCE SHEETS
June 30, 2019 and 2018

	2019	2018
ASSETS		
Pooled cash and investments	$ 84,707	$ 83,104
Interest receivable	186	149
Total assets	$ 84,893	$ 83,253
FUND BALANCE		
Committed	$ 84,893	$ 83,253

LINCOLN COUNTY, NEVADA
NONMAJOR LINCOLN COUNTY WATER
GRANT MATCH SPECIAL REVENUE FUND
SCHEDULE OF REVENUES, EXPENDITURES, AND CHANGES
IN FUND BALANCE - BUDGET (GAAP BASIS) AND ACTUAL
Year Ended June 30, 2019
(With Comparative Actual Amounts for Year Ended June 30, 2018)

	2019			2018
	Budget	Actual	Variance - Positive (Negative)	Actual
Revenues:				
Miscellaneous:				
Investment income	$ 150	$ 1,640	$ 1,490	$ 31
Expenditures:				
Current:				
General government:				
Services and supplies	83,422	-	83,422	-
Excess (deficiency) of revenues over expenditures	(83,272)	1,640	84,912	31
Fund balance:				
Beginning of year	83,272	83,253	(19)	83,222
End of year	$ -	$ 84,893	$ 84,893	$ 83,253

LINCOLN COUNTY, NEVADA
NONMAJOR LINCOLN COUNTY WATER DISTRICT
GENERAL SPECIAL REVENUE FUND
COMPARATIVE BALANCE SHEETS
June 30, 2019 and 2018

	2019	2018
ASSETS		
Pooled cash and investments	$ 295,924	$ 433,593
Interest receivable	1,062	820
Total assets	$ 296,986	$ 434,413
LIABILITIES		
Accounts payable	$ 8,651	$ 2,164
Accrued payroll and benefits	6,715	5,800
Total liabilities	15,366	7,964
FUND BALANCE		
Committed	281,620	426,449
Total fund balance	281,620	426,449
Total liabilities and fund balance	$ 296,986	$ 434,413

LINCOLN COUNTY, NEVADA
NONMAJOR LINCOLN COUNTY WATER DISTRICT
GENERAL SPECIAL REVENUE FUND
SCHEDULE OF REVENUES, EXPENDITURES, AND CHANGES IN FUND BALANCE - BUDGET (GAAP BASIS) AND ACTUAL
Year Ended June 30, 2019
(With Comparative Actual Amounts for Year Ended June 30, 2018)

	2019 Budget	2019 Actual	Variance - Positive (Negative)	2018 Actual
Revenues:				
Miscellaneous:				
Other - water sales	$ -	$ 500	$ 500	$ -
Investment income	-	8,693	8,693	(585)
Total revenues	-	9,193	9,193	(585)
Expenditures:				
Current:				
General government:				
Salaries and wages	90,000	81,149	8,851	81,797
Employee benefits	37,000	34,570	2,430	35,104
Services and supplies	135,000	38,303	96,697	36,593
Total general government	262,000	154,022	107,978	153,494
Excess (deficiency) of revenues over expenditures	(262,000)	(144,829)	117,171	(154,079)
Other financing sources (uses):				
Operating transfers in	200,000	-	(200,000)	100,000
Net change in fund balance	(62,000)	(144,829)	(82,829)	(54,079)
Fund balance:				
Beginning of year	102,669	426,449	323,780	480,528
End of year	$ 40,669	$ 281,620	$ 240,951	$ 426,449

LINCOLN COUNTY, NEVADA
NONMAJOR LINCOLN COUNTY WATER DISTRICT
PLANNING & DEVELOPMENT SPECIAL REVENUE FUND
COMPARATIVE BALANCE SHEETS
June 30, 2019 and 2018

	2019	2018
ASSETS		
Pooled cash and investments	$ 902,932	$ 882,957
Interest receivable	3,901	3,051
Total assets	$ 906,833	$ 886,008
LIABILITIES		
Accounts payable	$ -	$ 9,225
FUND BALANCE		
Committed	906,833	876,783
Total liabilities and fund balance	$ 906,833	$ 886,008

LINCOLN COUNTY, NEVADA
NONMAJOR LINCOLN COUNTY WATER DISTRICT
PLANNING & DEVELOPMENT SPECIAL REVENUE FUND
SCHEDULE OF REVENUES, EXPENDITURES, AND CHANGES IN FUND BALANCE - BUDGET (GAAP BASIS) AND ACTUAL
Year Ended June 30, 2019
(With Comparative Actual Amounts for Year Ended June 30, 2018)

	2019 Budget	2019 Actual	Variance - Positive (Negative)	2018 Actual
Revenues:				
Miscellaneous:				
Investment income	$ 10,000	$ 31,918	$ 21,918	$ (2,189)
Expenditures:				
Current:				
General government:				
Services and supplies	913,439	1,868	911,571	14,467
Excess (deficiency) of revenues over expenditures	(903,439)	30,050	933,489	(16,656)
Fund balance:				
Beginning of year	903,439	876,783	(26,656)	893,439
End of year	$ -	$ 906,833	$ 906,833	$ 876,783

LINCOLN COUNTY, NEVADA
NONMAJOR LINCOLN COUNTY WATER DISTRICT
SPECIAL PROJECTS SPECIAL REVENUE FUND
COMPARATIVE BALANCE SHEETS
June 30, 2019 and 2018

	2019	2018
ASSETS		
Pooled cash and investments	$ 666,069	$ 643,796
Interest receivable	2,800	2,162
Prepaid expenses	40,000	48,000
Total assets	$ 708,869	$ 693,958
LIABILITIES		
Accounts payable	$ -	$ -
FUND BALANCE		
Nonspendable	40,000	48,000
Committed	668,869	645,958
Total fund balance	708,869	693,958
Total liabilities and fund balance	$ 708,869	$ 693,958

LINCOLN COUNTY, NEVADA
NONMAJOR LINCOLN COUNTY WATER DISTRICT
SPECIAL PROJECTS SPECIAL REVENUE FUND
SCHEDULE OF REVENUES, EXPENDITURES, AND CHANGES IN FUND BALANCE - BUDGET (GAAP BASIS) AND ACTUAL
Year Ended June 30, 2019
(With Comparative Actual Amounts for Year Ended June 30, 2018)

	2019 Budget	2019 Actual	Variance - Positive (Negative)	2018 Actual
Revenues:				
Miscellaneous:				
Investment income	$ 6,000	$ 22,911	$ 16,911	$ (1,315)
Expenditures:				
Current:				
General government:				
Services and supplies	715,273	8,000	707,273	18,000
Excess (deficiency) of revenues over expenditures	(709,273)	14,911	724,184	(19,315)
Fund balance:				
Beginning of year	709,273	693,958	(15,315)	713,273
End of year	$ -	$ 708,869	$ 708,869	$ 693,958

LINCOLN COUNTY, NEVADA
NONMAJOR ASSESSOR TECHNOLOGY SPECIAL REVENUE FUND
COMPARATIVE BALANCE SHEETS
June 30, 2019 and 2018

	2019	2018
ASSETS		
Pooled cash and investments	$ 44,771	$ 44,605
LIABILITIES		
Accounts payable	$ 9,449	$ -
FUND BALANCE		
Restricted	35,322	44,605
Total liabilities and fund balance	$ 44,771	$ 44,605

LINCOLN COUNTY, NEVADA
NONMAJOR ASSESSOR TECHNOLOGY SPECIAL REVENUE FUND
SCHEDULE OF REVENUES, EXPENDITURES, AND CHANGES
IN FUND BALANCE - BUDGET (GAAP BASIS) AND ACTUAL
Year Ended June 30, 2019
(With Comparative Actual Amounts for Year Ended June 30, 2018)

	2019 Budget	2019 Actual	Variance - Positive (Negative)	2018 Actual
Revenues:				
Charges for services:				
Other	$ 18,000	$ 13,336	$ (4,664)	$ 10,164
Expenditures:				
Current:				
General government:				
Services and supplies	64,000	3,170	60,830	9,026
Capital outlay	20,000	19,449	551	19,203
Total general government	84,000	22,619	61,381	28,229
Excess (deficiency) of revenues over expenditures	(66,000)	(9,283)	56,717	(18,065)
Fund balance:				
Beginning of year	66,267	44,605	(21,662)	62,670
End of year	$ 267	$ 35,322	$ 35,055	$ 44,605

LINCOLN COUNTY, NEVADA
NONMAJOR DISTRICT COURT TECHNOLOGY SPECIAL REVENUE FUND
COMPARATIVE BALANCE SHEETS
June 30, 2019 and 2018

	2019	2018
ASSETS		
Pooled cash and investments	$ 5,120	$ 5,120
FUND BALANCE		
Restricted	$ 5,120	$ 5,120

LINCOLN COUNTY, NEVADA
NONMAJOR DISTRICT COURT TECHNOLOGY SPECIAL REVENUE FUND
SCHEDULE OF REVENUES, EXPENDITURES, AND CHANGES
IN FUND BALANCE - BUDGET (GAAP BASIS) AND ACTUAL
Year Ended June 30, 2019
(With Comparative Actual Amounts for Year Ended June 30, 2018)

	2019			
	Budget	Actual	Variance - Positive (Negative)	2018 Actual
Revenues:				
Charges for services:	$ -	$ -	$ -	$ -
Expenditures:				
Current:				
Judicial:				
Services and supplies	5,120	-	5,120	-
Excess (deficiency) of revenues over expenditures	(5,120)	-	5,120	-
Fund balance:				
Beginning of year	5,120	5,120	-	5,120
End of year	$ -	$ 5,120	$ 5,120	$ 5,120

LINCOLN COUNTY, NEVADA
NONMAJOR DISTRICT COURT SPECIALTY COURT SPECIAL REVENUE FUND
COMPARATIVE BALANCE SHEETS
June 30, 2019 and 2018

	2019	2018
ASSETS		
Pooled cash and investments	$ 2,850	$ 12,248
LIABILITIES		
Accounts payable	$ 2,761	$ 2,272
FUND BALANCE		
Restricted	89	9,976
Total liabilities and fund balance	$ 2,850	$ 12,248

LINCOLN COUNTY, NEVADA
NONMAJOR DISTRICT COURT SPECIALTY COURT SPECIAL REVENUE FUND
SCHEDULE OF REVENUES, EXPENDITURES, AND CHANGES
IN FUND BALANCE - BUDGET (GAAP BASIS) AND ACTUAL
Year Ended June 30, 2019
(With Comparative Actual Amounts for Year Ended June 30, 2018)

	2019			
	Budget	Actual	Variance-Positive (Negative)	2018 Actual
Revenues:				
Charges for services:				
Clerk fees	$ 20,463	$ 12,219	$ (8,244)	$ 4,891
Expenditures:				
Judicial:				
Services and supplies	27,168	22,106	5,062	15,876
Excess (deficiency) of revenues over expenditures	(6,705)	(9,887)	(3,182)	(10,985)
Fund balance:				
Beginning of year	6,705	9,976	3,271	20,961
End of year	$ -	$ 89	$ 89	$ 9,976

LINCOLN COUNTY, NEVADA
NONMAJOR COURT SECURITY FEE SPECIAL REVENUE FUND
COMPARATIVE BALANCE SHEETS
June 30, 2019 and 2018

	2019	2018
ASSETS		
Pooled cash and investments	$ 10,990	$ 9,690
Interest receivable	23	17
Total assets	$ 11,013	$ 9,707
FUND BALANCE		
Restricted	$ 11,013	$ 9,707

LINCOLN COUNTY, NEVADA
NONMAJOR COURT SECURITY FEE SPECIAL REVENUE FUND
SCHEDULE OF REVENUES, EXPENDITURES, AND CHANGES
IN FUND BALANCE - BUDGET (GAAP BASIS) AND ACTUAL
Year Ended June 30, 2019
(With Comparative Actual Amounts for Year Ended June 30, 2018)

	2019			2018
	Budget	Actual	Variance-Positive (Negative)	
Revenues:				
Charges for services:				
Clerk fees	$ 700	$ 1,100	$ 400	$ 1,020
Miscellaneous:				
Investment income	-	206	206	3
Total revenues	700	1,306	606	1,023
Expenditures:				
Judicial:				
Services and supplies	10,084	-	10,084	-
Excess (deficiency) of revenues over expenditures	(9,384)	1,306	10,690	1,023
Fund balance:				
Beginning of year	9,384	9,707	323	8,684
End of year	$ -	$ 11,013	$ 11,013	$ 9,707

LINCOLN COUNTY, NEVADA
NONMAJOR DISTRICT COURT ENRICHMENT SPECIAL REVENUE FUND
COMPARATIVE BALANCE SHEETS
June 30, 2019 and 2018

	2019	2018
ASSETS		
Pooled cash and investments	$ 50,370	$ 43,591
Interest receivable	105	78
Total assets	$ 50,475	$ 43,669
FUND BALANCE		
Restricted	$ 50,475	$ 43,669

LINCOLN COUNTY, NEVADA
NONMAJOR DISTRICT COURT ENRICHMENT SPECIAL REVENUE FUND
SCHEDULE OF REVENUES, EXPENDITURES, AND CHANGES
IN FUND BALANCE - BUDGET (GAAP BASIS) AND ACTUAL
Year Ended June 30, 2019
(With Comparative Actual Amounts for Year Ended June 30, 2018)

	2019			2018
	Budget	Actual	Variance-Positive (Negative)	
Revenues:				
Charges for services:				
Clerk fees	$ 3,500	$ 5,877	$ 2,377	$ 5,815
Miscellaneous:				
Investment income	-	929	929	16
Total revenues	3,500	6,806	3,306	5,831
Expenditures:				
Current:				
Judicial:				
Services and supplies	44,838	-	44,838	-
Excess (deficiency) of revenues over expenditures	(41,338)	6,806	48,144	5,831
Fund balance:				
Beginning of year	41,338	43,669	2,331	37,838
End of year	$ -	$ 50,475	$ 50,475	$ 43,669

LINCOLN COUNTY, NEVADA
NONMAJOR FUND - NUCLEAR WASTE SPECIAL REVENUE FUND
COMPARATIVE BALANCE SHEETS
June 30, 2019 and 2018

	2019	2018
ASSETS		
Pooled cash and investments	$ -	$ 2,099
Interest receivable	-	3
Total assets	$ -	$ 2,102
LIABILITIES		
Accounts payable	$ -	$ 1,100
Unearned revenue	-	1,002
Total liabilities	-	2,102
FUND BALANCE		
Restricted	-	-
Total liabilities and fund balance	$ -	$ 2,102

LINCOLN COUNTY, NEVADA
NONMAJOR FUND - NUCLEAR WASTE SPECIAL REVENUE FUND
SCHEDULE OF REVENUES, EXPENDITURES, AND CHANGES
IN FUND BALANCE - BUDGET (GAAP BASIS) AND ACTUAL
Year Ended June 30, 2019
(With Comparative Actual Amounts for Year Ended June 30, 2018)

	2019 Budget	2019 Actual	Variance - Positive (Negative)	2018 Actual
Revenues:				
Intergovernmental:				
Grants	$ 2,622	$ 1,001	$ (1,621)	$ 32,506
Miscellaneous:				
Investment income	-	1	1	1
Total revenues	2,622	1,002	(1,620)	32,507
Expenditures:				
Current:				
General government:				
Salaries and wages	2,622	-	2,622	15,309
Employee benefits	-	-	-	9,014
Services and supplies	-	1,002	(1,002)	8,184
Total expenditures	2,622	1,002	1,620	32,507
Net change in fund balance	-	-	-	-
Fund balance:				
Beginning of year	-	-	-	-
End of year	$ -	$ -	$ -	$ -

LINCOLN COUNTY, NEVADA
NONMAJOR FUND - PROPERTY MANAGEMENT SPECIAL REVENUE FUND
COMPARATIVE BALANCE SHEETS
June 30, 2019 and 2018

	2019	2018
ASSETS		
Pooled cash and investments	$ 73,415	$ 59,808
LIABILITIES		
Accounts payable	$ 5,422	$ 3,874
Accrued payroll and benefits	273	676
Total liabilities	5,695	4,550
FUND BALANCE		
Committed for general government	67,720	55,258
Total liabilities and fund balance	$ 73,415	$ 59,808

LINCOLN COUNTY, NEVADA
NONMAJOR FUND - PROPERTY MANAGEMENT SPECIAL REVENUE FUND
SCHEDULE OF REVENUES, EXPENDITURES, AND CHANGES
IN FUND BALANCE - BUDGET (GAAP BASIS) AND ACTUAL
Year Ended June 30, 2019
(With Comparative Actual Amounts for Year Ended June 30, 2018)

	2019			
	Budget	Actual	Variance-Positive (Negative)	2018 Actual
Revenues:				
Miscellaneous:				
Rent	$ 15,600	$ 15,200	$ (400)	$ 15,585
Expenditures:				
General government:				
Salaries and wages	19,688	15,167	4,521	17,415
Employee benefits	5,500	2,555	2,945	3,230
Services and supplies	33,380	25,016	8,364	28,433
Total expenditures	58,568	42,738	15,830	49,078
Excess (deficiency) of revenues over expenditures	(42,968)	(27,538)	15,430	(33,493)
Other financing sources (uses):				
Operating transfer in	40,000	40,000	-	40,000
Net change in fund balance	(2,968)	12,462	15,430	6,507
Fund balance:				
Beginning of year	43,549	55,258	11,709	48,751
End of year	$ 40,581	$ 67,720	$ 27,139	$ 55,258

LINCOLN COUNTY, NEVADA
INTERNALLY REPORTED (BUDGETARY BASIS) FUNDS REPORTED AS PART OF THE GENERAL FUND FOR EXTERNAL REPORTING PURPOSES
COMBINING BALANCE SHEET
JUNE 30, 2019
(With Comparative Actual Amounts for 2018)

	Stabilization	Planning	Rachel Jones Memorial Cemetery	Flood Control
ASSETS				
Pooled cash and investments	$ 133,195	$ 43,667	$ 827	$ 39,920
Interest receivable	293	131	-	-
Due from others	-	-	-	-
Total assets	$ 133,488	$ 43,798	$ 827	$ 39,920
LIABILITIES				
Accounts payable	$ -	$ 6,723	$ -	$ -
Accrued payroll and benefits	-	2,154	-	-
Total liabilities	-	8,877	-	-
FUND BALANCE				
Restricted for:				
Stabilization	133,488	-	-	-
Rachel Jones Cemetery	-	-	827	-
General government	-	-	-	-
Committed for:				
Planning	-	34,921	-	-
Flood Control	-	-	-	39,920
Land Act	-	-	-	-
Water	-	-	-	-
Total fund balance	133,488	34,921	827	39,920
Total liabilities and fund balance	$ 133,488	$ 43,798	$ 827	$ 39,920

Special Projects	Lincoln County Land Act Emergency Disaster	Lincoln County Water Emergency Disaster	Totals 2019	Totals 2018
$ 355,977	$ 65,854	$ 64,553	$ 703,993	$ 529,054
447	145	142	1,158	858
-	-	-	-	27,652
$ 356,424	$ 65,999	$ 64,695	$ 705,151	$ 557,564
$ -	$ -	$ -	$ 6,723	$ 19,087
-	-	-	2,154	2,068
-	-	-	8,877	21,155
-	-	-	133,488	130,904
-	-	-	827	827
356,424	-	-	356,424	208,567
-	-	-	34,921	27,121
-	-	-	39,920	40,825
-	65,999	-	65,999	64,723
-	-	64,695	64,695	63,442
356,424	65,999	64,695	696,274	536,409
$ 356,424	$ 65,999	$ 64,695	$ 705,151	$ 557,564

LINCOLN COUNTY, NEVADA
INTERNALLY REPORTED (BUDGETARY BASIS) FUNDS REPORTED AS PART OF THE GENERAL FUND FOR EXTERNAL REPORTING PURPOSES
COMBINING SCHEDULE OF REVENUES, EXPENDITURES, AND CHANGES IN FUND BALANCES
Year Ended June 30, 2019
(With Comparative Actual Amounts for the Year Ended June 30, 2018)

	Stabilization	Planning	Rachel Jones Memorial Cemetery	Flood Control
Revenues:				
Charges for services	$ -	$ 12,385	$ -	$ -
Miscellaneous	2,584	1,156	-	-
Total revenues	2,584	13,541	-	-
Expenditures:				
General government	-	-	-	-
Public works	-	80,741	-	905
Total expenditures	-	80,741	-	905
Excess (deficiency) of revenues over expenditures	2,584	(67,200)	-	(905)
Other financing sources (uses):				
Operating transfers in	-	75,000	-	-
Operating transfers out	-	-	-	-
Total other financing sources (uses)	-	75,000	-	-
Net change in fund balance	2,584	7,800	-	(905)
Fund balance:				
Beginning of year	130,904	27,121	827	40,825
End of year	$ 133,488	$ 34,921	$ 827	$ 39,920

Special Projects	Lincoln County Land Act Emergency Disaster	Lincoln County Water Emergency Disaster	Totals 2019	Totals 2018
$ -	$ -	$ -	$ 12,385	$ 10,901
3,942	1,276	1,253	10,211	27,832
3,942	1,276	1,253	22,596	38,733
26,837	-	-	26,837	42,892
-	-	-	81,646	82,146
26,837	-	-	108,483	125,038
(22,895)	1,276	1,253	(85,887)	(86,305)
210,752	-	-	285,752	205,000
(40,000)	-	-	(40,000)	(378,500)
170,752	-	-	245,752	(173,500)
147,857	1,276	1,253	159,865	(259,805)
208,567	64,723	63,442	536,409	796,214
$ 356,424	$ 65,999	$ 64,695	$ 696,274	$ 536,409

LINCOLN COUNTY, NEVADA
STABILIZATION
INTERNALLY REPORTED (BUDGETARY BASIS) FUND REPORTED
AS PART OF THE GENERAL FUND FOR EXTERNAL REPORTING PURPOSES
COMPARATIVE BALANCE SHEETS
June 30, 2019 and 2018

	2019	2018
ASSETS		
Pooled cash and investments	$ 133,195	$ 130,674
Interest receivable	293	230
Total assets	$ 133,488	$ 130,904
FUND BALANCE		
Restricted for stabilization	$ 133,488	$ 130,904

LINCOLN COUNTY, NEVADA
STABILIZATION
INTERNALLY REPORTED (BUDGETARY BASIS) FUND REPORTED
AS PART OF THE GENERAL FUND FOR EXTERNAL REPORTING PURPOSES
SCHEDULE OF REVENUES, EXPENDITURES AND CHANGES IN FUND BALANCE
BUDGET (GAAP BASIS) AND ACTUAL
Year Ended June 30, 2019
(With Comparative Actual Amounts for Year Ended June 30, 2018)

	2019 Budget	2019 Actual	Variance - Positive (Negative)	2018 Actual
Revenues:				
Miscellaneous:				
Investment income	$ 250	$ 2,584	$ 2,334	$ 48
Expenditures:				
Current:				
General government:				
Service and supplies	131,154	-	131,154	-
Excess (deficiency) of revenues over expenditures	(130,904)	2,584	133,488	48
Fund balance:				
Beginning of year	130,904	130,904	-	130,856
End of year	$ -	$ 133,488	$ 133,488	$ 130,904

LINCOLN COUNTY, NEVADA
PLANNING
INTERNALLY REPORTED (BUDGETARY BASIS) FUND REPORTED
AS PART OF THE GENERAL FUND FOR EXTERNAL REPORTING PURPOSES
COMPARATIVE BALANCE SHEETS
June 30, 2019 and 2018

	2019	2018
ASSETS		
Pooled cash and investments	$ 43,667	$ 35,365
Interest receivable	131	61
Total assets	$ 43,798	$ 35,426
LIABILITIES		
Accounts payable	$ 6,723	$ 6,237
Accrued payroll and benefits	2,154	2,068
Total liabilities	8,877	8,305
FUND BALANCE		
Committed for planning	34,921	27,121
Total liabilities and fund balance	$ 43,798	$ 35,426

LINCOLN COUNTY, NEVADA
PLANNING
INTERNALLY REPORTED (BUDGETARY BASIS) FUND REPORTED AS PART OF THE GENERAL FUND FOR EXTERNAL REPORTING PURPOSES
SCHEDULE OF REVENUES, EXPENDITURES, AND CHANGES IN FUND BALANCE - BUDGET (GAAP BASIS) AND ACTUAL
Year Ended June 30, 2019
(With Comparative Actual Amounts for Year Ended June 30, 2018)

	2019 Budget	2019 Actual	Variance-Positive (Negative)	2018 Actual
Revenues:				
Charges for services:				
Planning fees	$ 10,500	$ 12,385	$ 1,885	$ 10,901
Miscellaneous:				
Investment income	-	1,156	1,156	13
Total revenues	10,500	13,541	3,041	10,914
Expenditures:				
Current:				
Public works:				
Salaries and wages	67,358	60,235	7,123	60,924
Employee benefits	22,324	13,557	8,767	13,469
Services and supplies	9,359	6,949	2,410	6,848
Total expenditures	99,041	80,741	18,300	81,241
Excess (deficiency) of revenues over expenditures	(88,541)	(67,200)	21,341	(70,327)
Other financing sources (uses):				
Operating transfer in	75,000	75,000	-	75,000
Net change in fund balance	(13,541)	7,800	21,341	4,673
Fund balance:				
Beginning of year	13,541	27,121	13,580	22,448
End of year	$ -	$ 34,921	$ 34,921	$ 27,121

LINCOLN COUNTY, NEVADA
RACHEL JONES MEMORIAL CEMETERY
INTERNALLY REPORTED (BUDGETARY BASIS) FUND REPORTED
AS PART OF THE GENERAL FUND FOR EXTERNAL REPORTING PURPOSES
COMPARATIVE BALANCE SHEETS
June 30, 2019 and 2018

	2019	2018
ASSETS		
Pooled cash and investments	$ 827	$ 827
FUND BALANCE		
Restricted for Rachel Jones Cemetery	$ 827	$ 827

LINCOLN COUNTY, NEVADA
RACHEL JONES MEMORIAL CEMETERY
INTERNALLY REPORTED (BUDGETARY BASIS) FUND REPORTED
AS PART OF THE GENERAL FUND FOR EXTERNAL REPORTING PURPOSES
SCHEDULE OF REVENUES, EXPENDITURES, AND CHANGES
IN FUND BALANCE - BUDGET (GAAP BASIS) AND ACTUAL
Year Ended June 30, 2019
(With Comparative Actual Amounts for Year Ended June 30, 2018)

	2019			2018
	Budget	Actual	Variance - Positive (Negative)	Actual
Revenues:				
Miscellaneous:	$ -	$ -	$ -	$ -
Expenditures:				
Health:				
Services and supplies	827	-	827	-
Excess (deficiency) of revenues over expenditures	(827)	-	827	-
Fund balance:				
Beginning of year	827	827	-	827
End of year	$ -	$ 827	$ 827	$ 827

LINCOLN COUNTY, NEVADA
FLOOD CONTROL
INTERNALLY REPORTED (BUDGETARY BASIS) FUND REPORTED
AS PART OF THE GENERAL FUND FOR EXTERNAL REPORTING PURPOSES
COMPARATIVE BALANCE SHEETS
June 30, 2019 and 2018

	2019	2018
ASSETS		
Pooled cash and investments	$ 39,920	$ 40,825
LIABILITIES		
Accounts payable	$ -	$ -
FUND BALANCE		
Committed for flood control	39,920	40,825
Total liabilities and fund balance	$ 39,920	$ 40,825

LINCOLN COUNTY, NEVADA
FLOOD CONTROL
INTERNALLY REPORTED (BUDGETARY BASIS) FUND REPORTED
AS PART OF THE GENERAL FUND FOR EXTERNAL REPORTING PURPOSES
SCHEDULE OF REVENUES, EXPENDITURES, AND CHANGES
IN FUND BALANCE - BUDGET (GAAP BASIS) AND ACTUAL
Year Ended June 30, 2019
(With Comparative Actual Amounts for Year Ended June 30, 2018)

	2019 Budget	2019 Actual	Variance-Positive (Negative)	2018 Actual
Revenues:	$ -	$ -	$ -	$ -
Expenditures:				
Current:				
Public works:				
Services and supplies	20,000	905	19,095	905
Excess (deficiency) of revenues over expenditures	(20,000)	(905)	19,095	(905)
Fund balance:				
Beginning of year	21,730	40,825	19,095	41,730
End of year	$ 1,730	$ 39,920	$ 38,190	$ 40,825

LINCOLN COUNTY, NEVADA
SPECIAL PROJECTS
INTERNALLY REPORTED (BUDGETARY BASIS) FUND REPORTED
AS PART OF THE GENERAL FUND FOR EXTERNAL REPORTING PURPOSES
COMPARATIVE BALANCE SHEETS
June 30, 2019 and 2018

	2019	2018
ASSETS		
Pooled cash and investments	$ 355,977	$ 193,424
Interest receivable	447	341
Due from others	-	27,652
Total assets	$ 356,424	$ 221,417
LIABILITIES		
Accounts payable	$ -	$ 12,850
FUND BALANCE		
Restricted	356,424	208,567
Total liabilities and fund balance	$ 356,424	$ 221,417

LINCOLN COUNTY, NEVADA
SPECIAL PROJECTS
INTERNALLY REPORTED (BUDGETARY BASIS) FUND REPORTED
AS PART OF THE GENERAL FUND FOR EXTERNAL REPORTING PURPOSES
SCHEDULE OF REVENUES, EXPENDITURES, AND CHANGES
IN FUND BALANCE - BUDGET (GAAP BASIS) AND ACTUAL
Year Ended June 30, 2019
(With Comparative Actual Amounts for Year Ended June 30, 2018)

	2019 Budget	2019 Actual	Variance - Positive (Negative)	2018 Actual
Revenues:				
Miscellaneous:				
Investment Income	$ -	$ 3,942	$ 3,942	$ 71
Other	-	-	-	27,652
	-	3,942	3,942	27,723
Expenditures:				
General government:				
Salaries and wages	-	4,929	(4,929)	787
Benefits	-	-	-	300
Services and supplies	-	16,307	(16,307)	28,906
Capital outlay	388,687	5,601	383,086	12,850
Total expenditures	388,687	26,837	361,850	42,843
Excess (deficiency) of revenues over expenditures	(388,687)	(22,895)	365,792	(15,120)
Other financing sources (uses):				
Operating transfers in	210,752	210,752	-	130,000
Operating transfers out	(40,000)	(40,000)	-	(378,500)
Total other financing sources (uses)	170,752	170,752	-	(248,500)
Net change in fund balance	(217,935)	147,857	365,792	(263,620)
Fund balance:				
Beginning of year	269,341	208,567	(60,774)	472,187
End of year	$ 51,406	$ 356,424	$ 305,018	$ 208,567

LINCOLN COUNTY, NEVADA
LINCOLN COUNTY LAND ACT EMERGENCY DISASTER
INTERNALLY REPORTED (BUDGETARY BASIS) FUND REPORTED
AS PART OF THE GENERAL FUND FOR EXTERNAL REPORTING PURPOSES
COMPARATIVE BALANCE SHEETS
June 30, 2019 and 2018

	2019	2018
ASSETS		
Pooled cash and investments	$ 65,854	$ 64,608
Interest receivable	145	115
Total assets	$ 65,999	$ 64,723
LIABILITIES		
Accounts payable	$ -	$ -
FUND BALANCE		
Committed	65,999	64,723
Total liabilities and fund balance	$ 65,999	$ 64,723

LINCOLN COUNTY, NEVADA
LINCOLN COUNTY LAND ACT EMERGENCY DISASTER
INTERNALLY REPORTED (BUDGETARY BASIS) FUND REPORTED
AS PART OF THE GENERAL FUND FOR EXTERNAL REPORTING PURPOSES
SCHEDULE OF REVENUES, EXPENDITURES, AND CHANGES
IN FUND BALANCE - BUDGET (GAAP BASIS) AND ACTUAL
Year Ended June 30, 2019
(With Comparative Actual Amounts for Year Ended June 30, 2018)

	2019		Variance - Positive	2018
	Budget	Actual	(Negative)	Actual
Revenues:				
Miscellaneous:				
Investment income	$ -	$ 1,276	$ 1,276	$ 24
Expenditures:				
Current:				
General government:				
Services and supplies	64,748	-	64,748	49
Excess (deficiency) of revenues over expenditures	(64,748)	1,276	66,024	(25)
Fund balance:				
Beginning of year	64,748	64,723	(25)	64,748
End of year	$ -	$ 65,999	$ 65,999	$ 64,723

LINCOLN COUNTY, NEVADA
LINCOLN COUNTY WATER EMERGENCY DISASTER
INTERNALLY REPORTED (BUDGETARY BASIS) FUND REPORTED
AS PART OF THE GENERAL FUND FOR EXTERNAL REPORTING PURPOSES
COMPARATIVE BALANCE SHEETS
June 30, 2019 and 2018

	2019	2018
ASSETS		
Pooled cash and investments	$ 64,553	$ 63,331
Interest receivable	142	111
Total assets	$ 64,695	$ 63,442
FUND BALANCE		
Committed	$ 64,695	$ 63,442

LINCOLN COUNTY, NEVADA
LINCOLN COUNTY WATER EMERGENCY DISASTER
INTERNALLY REPORTED (BUDGETARY BASIS) FUND REPORTED
AS PART OF THE GENERAL FUND FOR EXTERNAL REPORTING PURPOSES
SCHEDULE OF REVENUES, EXPENDITURES, AND CHANGES
IN FUND BALANCE - BUDGET (GAAP BASIS) AND ACTUAL
Year Ended June 30, 2019
(With Comparative Actual Amounts for Year Ended June 30, 2018)

	2019 Budget	2019 Actual	Variance - Positive (Negative)	2018 Actual
Revenues:				
Miscellaneous:				
Investment income	$ 100	$ 1,253	$ 1,153	$ 24
Expenditures:				
Current:				
General government:				
Services and supplies	63,538	-	63,538	-
Excess (deficiency) of revenues over expenditures	(63,438)	1,253	64,691	24
Fund balance:				
Beginning of year	63,438	63,442	4	63,418
End of year	$ -	$ 64,695	$ 64,695	$ 63,442

LINCOLN COUNTY, NEVADA
NONMAJOR CAPITAL PROJECTS FUNDS
COMBINING BALANCE SHEET
June 30, 2019
(With Comparative Totals for June 30, 2018)

	Capital Improvements	Pioche Town Grant	Pioche Town	Alamo Town	Panaca Town
ASSETS					
Pooled cash and investments	$ 11,980	$ 14,253	$ 53,806	$ 18,562	$ 14,983
Interest receivable	32	31	115	47	38
Taxes receivable	1,715	-	-	-	-
Due from other governments	-	-	-	-	-
Total assets	$ 13,727	$ 14,284	$ 53,921	$ 18,609	$ 15,021
LIABILITIES					
Accounts payable	$ -	$ -	$ -	$ -	$ -
DEFERRED INFLOWS OF RESOURCES					
Unavailable revenue - property taxes	1,360	-	-	-	-
FUND BALANCE					
Restricted for:					
Capital projects	12,367	14,284	53,921	18,609	15,021
Total liabilities, deferred inflows of resources, and fund balance	$ 13,727	$ 14,284	$ 53,921	$ 18,609	$ 15,021

Ambulance	Fair Board	Vehicle	Road Equipment	Airport	Lincoln County Land Act
$ 12,153	$ 24,145	$ 7,728	$ 185,592	$ 3,013	$ 30,348
28	56	23	399	6	67
-	-	-	-	-	-
-	-	-	-	-	-
$ 12,181	$ 24,201	$ 7,751	$ 185,991	$ 3,019	$ 30,415
$ -	$ 201	$ -	$ -	$ -	$ -
-	-	-	-	-	-
12,181	24,000	7,751	185,991	3,019	30,415
$ 12,181	$ 24,201	$ 7,751	$ 185,991	$ 3,019	$ 30,415

LINCOLN COUNTY, NEVADA
NONMAJOR CAPITAL PROJECTS FUNDS
COMBINING BALANCE SHEET
June 30, 2019
(With Comparative Totals for June 30, 2018)

	Lincoln County Water	Lincoln County Water District	Totals 2019	Totals 2018
ASSETS				
Pooled cash and investments	$ 80,189	$ 710,908	$ 1,167,660	$ 1,070,077
Interest receivable	176	3,071	4,089	3,501
Taxes receivable	-	-	1,715	1,668
Due from other governments	-	-	-	92
Total assets	$ 80,365	$ 713,979	$ 1,173,464	$ 1,075,338
LIABILITIES				
Accounts payable	$ -	$ -	$ 201	$ -
DEFERRED INFLOWS OF RESOURCES				
Unavailable revenue - property taxes	-	-	1,360	1,370
FUND BALANCE				
Restricted for:				
Capital projects	80,365	713,979	1,171,903	1,073,968
Total liabilities, deferred inflows of resources, and fund balance	$ 80,365	$ 713,979	$ 1,173,464	$ 1,075,338

LINCOLN COUNTY, NEVADA
NONMAJOR CAPITAL PROJECTS FUNDS
COMBINING SCHEDULE OF REVENUES, EXPENDITURES,
AND CHANGES IN FUND BALANCE
Year Ended June 30, 2019
(With Comparative Actual Amounts for Year Ended June 30, 2018)

	Capital Improvements	Pioche Town Grant	Pioche Town	Alamo Town	Panaca Town
Revenues:					
Taxes	$ 114,793	$ -	$ -	$ -	$ -
Intergovernmental	126	-	-	-	-
Miscellaneous	282	277	1,017	417	332
Total revenues	115,201	277	1,017	417	332
Expenditures:					
Intergovernmental	8,040	-	-	-	-
Capital projects	-	-	-	-	1,378
Debt service:					
Principal	-	-	-	-	-
Interest	-	-	-	-	-
Total expenditures	8,040	-	-	-	1,378
Excess (deficiency) of revenues over expenditures	107,161	277	1,017	417	(1,046)
Other financing sources (uses):					
Operating transfers in	-	-	3,446	2,297	4,595
Operating transfers out	(131,338)	-	-	-	-
Sale of capital assets	-	-	-	-	-
Capital lease proceeds	-	-	-	-	-
Total other financing sources (uses)	(131,338)	-	3,446	2,297	4,595
Net change in fund balance	(24,177)	277	4,463	2,714	3,549
Fund balance:					
Beginning of year	36,544	14,007	49,458	15,895	11,472
End of year	$ 12,367	$ 14,284	$ 53,921	$ 18,609	$ 15,021

Ambulance	Fair Board	Vehicle	Road Equipment	Airport	Lincoln County Land Act
$ -	$ -	$ -	$ -	$ -	$ -
-	-	-	-	-	-
249	497	201	3,521	51	589
249	497	201	3,521	51	589
-	-	-	-	-	-
-	5,912	181,144	-	-	-
-	-	77,146	-	-	-
-	-	1,834	-	-	-
-	5,912	260,124	-	-	-
249	(5,415)	(259,923)	3,521	51	589
-	-	121,000	100,000	-	-
-	-	-	-	-	-
-	-	-	-	-	-
-	-	133,245	-	-	-
-	-	254,245	100,000	-	-
249	(5,415)	(5,678)	103,521	51	589
11,932	29,415	13,429	82,470	2,968	29,826
$ 12,181	$ 24,000	$ 7,751	$ 185,991	$ 3,019	$ 30,415

LINCOLN COUNTY, NEVADA
NONMAJOR CAPITAL PROJECTS FUNDS
COMBINING SCHEDULE OF REVENUES, EXPENDITURES,
AND CHANGES IN FUND BALANCE
Year Ended June 30, 2019
(With Comparative Actual Amounts for Year Ended June 30, 2018)

	Lincoln County Water	Lincoln County Water District	Totals 2019	Totals 2018
Revenues:				
Taxes	$ -	$ -	$ 114,793	$ 108,877
Intergovernmental	-	-	126	311
Miscellaneous	1,555	25,129	34,117	(1,431)
Total revenues	1,555	25,129	149,036	107,757
Expenditures:				
Current:				
Intergovernmental	-	-	8,040	7,637
Capital projects	-	8,892	197,326	248,229
Debt service:				
Principal	-	-	77,146	68,240
Interest	-	-	1,834	5,472
Total expenditures	-	8,892	284,346	329,578
Excess (deficiency) of revenues over expenditures	1,555	16,237	(135,310)	(221,821)
Other financing sources (uses):				
Operating transfers in	-	-	231,338	223,817
Operating transfers out	-	-	(131,338)	(107,817)
Sale of capital assets	-	-	-	53,744
Capital lease proceeds	-	-	133,245	-
Total other financing sources (uses)	-	-	233,245	169,744
Net change in fund balance	1,555	16,237	97,935	(52,077)
Fund balance:				
Beginning of year	78,810	697,742	1,073,968	1,126,045
End of year	$ 80,365	$ 713,979	$ 1,171,903	$ 1,073,968

LINCOLN COUNTY, NEVADA
NONMAJOR CAPITAL IMPROVEMENTS CAPITAL PROJECTS FUND
COMPARATIVE BALANCE SHEETS
June 30, 2019 and 2018

	2019	2018
ASSETS		
Pooled cash and investments	$ 11,980	$ 35,984
Interest receivable	32	170
Taxes receivable	1,715	1,668
Due from other governments	-	92
Total assets	$ 13,727	$ 37,914
LIABILITIES		
Accounts payable	$ -	$ -
DEFERRED INFLOWS OF RESOURCES		
Unavailable revenue - property taxes	1,360	1,370
FUND BALANCE		
Restricted	12,367	36,544
Total liabilities, deferred inflows of resources, and fund balance	$ 13,727	$ 37,914

LINCOLN COUNTY, NEVADA
NONMAJOR CAPITAL IMPROVEMENTS CAPITAL PROJECTS FUND
SCHEDULE OF REVENUES, EXPENDITURES, AND CHANGES
IN FUND BALANCE - BUDGET (GAAP BASIS) AND ACTUAL
Year Ended June 30, 2019
(With Comparative Actual Amounts for Year Ended June 30, 2018)

	2019		Variance - Positive	2018
	Budget	Actual	(Negative)	Actual
Revenues:				
Taxes:				
Property taxes	$ 113,721	$ 114,793	$ 1,072	$ 108,877
Intergovernmental:				
Private car lines	-	-	-	202
Fish and wildlife	-	126	126	109
Total intergovernmental	-	126	126	311
Miscellaneous:				
Investment income	-	282	282	35
Total revenues	113,721	115,201	1,480	109,223
Expenditures:				
Current:				
Intergovernmental	18,196	8,040	10,156	7,637
Excess (deficiency) of revenues over expenditures	95,525	107,161	11,636	101,586
Other financing sources (uses) :				
Operating transfers out	(121,000)	(131,338)	(10,338)	(107,817)
Net change in fund balance	(25,475)	(24,177)	1,298	(6,231)
Fund balance:				
Beginning of year	25,967	36,544	10,577	42,775
End of year	$ 492	$ 12,367	$ 11,875	$ 36,544

LINCOLN COUNTY, NEVADA
NONMAJOR PIOCHE TOWN GRANT CAPITAL PROJECTS FUND
COMPARATIVE BALANCE SHEETS
June 30, 2019 and 2018

	2019	2018
ASSETS		
Pooled cash and investments	$ 14,253	$ 13,983
Interest receivable	31	24
Total assets	$ 14,284	$ 14,007
LIABILITIES		
Accounts payable	$ -	$ -
FUND BALANCE		
Restricted	14,284	14,007
Total liabilities and fund balance	$ 14,284	$ 14,007

LINCOLN COUNTY, NEVADA
NONMAJOR PIOCHE TOWN GRANT CAPITAL PROJECTS FUND
SCHEDULE OF REVENUES, EXPENDITURES, AND CHANGES
IN FUND BALANCE - BUDGET (GAAP BASIS) AND ACTUAL
Year Ended June 30, 2019
(With Comparative Actual Amounts for Year Ended June 30, 2018)

	2019			
	Budget	Actual	Variance - Positive (Negative)	2018 Actual
Revenues:				
Miscellaneous:				
Investment income	$ -	$ 277	$ 277	$ 5
Expenditures:				
Current:				
Capital projects:				
Capital outlay	14,073	-	14,073	-
Excess (deficiency) of revenues over expenditures	(14,073)	277	14,350	5
Fund balance:				
Beginning of year	14,073	14,007	(66)	14,002
End of year	$ -	$ 14,284	$ 14,284	$ 14,007

LINCOLN COUNTY, NEVADA
NONMAJOR PIOCHE TOWN CAPITAL PROJECTS FUND
COMPARATIVE BALANCE SHEETS
June 30, 2019 and 2018

	2019	2018
ASSETS		
Pooled cash and investments	$ 53,806	$ 49,263
Interest receivable	115	195
Total assets	$ 53,921	$ 49,458
LIABILITIES		
Accounts payable	$ -	$ -
FUND BALANCE		
Restricted	53,921	49,458
Total liabilities and fund balance	$ 53,921	$ 49,458

LINCOLN COUNTY, NEVADA
NONMAJOR PIOCHE TOWN CAPITAL PROJECTS FUND
SCHEDULE OF REVENUES, EXPENDITURES, AND CHANGES IN FUND BALANCE - BUDGET (GAAP BASIS) AND ACTUAL
Year Ended June 30, 2019
(With Comparative Actual Amounts for Year Ended June 30, 2018)

	2019			
	Budget	Actual	Variance - Positive (Negative)	2018 Actual
Revenues:				
Miscellaneous:				
Investment income	$ -	$ 1,017	$ 1,017	$ 40
Expenditures:				
Current:				
Capital projects:				
Capital outlay	57,115	-	57,115	-
Excess (deficiency) of revenues over expenditures	(57,115)	1,017	58,132	40
Other financing sources (uses):				
Operating transfers in	5,487	3,446	(2,041)	3,273
Net change in fund balance	(51,628)	4,463	56,091	3,313
Fund balance:				
Beginning of year	51,628	49,458	(2,170)	46,145
End of year	$ -	$ 53,921	$ 53,921	$ 49,458

LINCOLN COUNTY, NEVADA
NONMAJOR ALAMO TOWN CAPITAL PROJECTS FUND
COMPARATIVE BALANCE SHEETS
June 30, 2019 and 2018

	2019	2018
ASSETS		
Pooled cash and investments	$ 18,562	$ 15,825
Interest receivable	47	70
Total assets	$ 18,609	$ 15,895
LIABILITIES		
Accounts payable	$ -	$ -
FUND BALANCE		
Restricted	18,609	15,895
Total liabilities and fund balance	$ 18,609	$ 15,895

LINCOLN COUNTY, NEVADA
NONMAJOR ALAMO TOWN CAPITAL PROJECTS FUND
SCHEDULE OF REVENUES, EXPENDITURES, AND CHANGES IN FUND BALANCE - BUDGET (GAAP BASIS) AND ACTUAL
Year Ended June 30, 2019
(With Comparative Actual Amounts for Year Ended June 30, 2018)

	2019 Budget	2019 Actual	Variance - Positive (Negative)	2018 Actual
Revenues:				
Intergovernmental:				
Miscellaneous:				
Investment income	$ 100	$ 417	$ 317	$ 14
Expenditures:				
Current:				
Capital projects:				
Capital outlay	7,800	-	7,800	-
Excess (deficiency) of revenues over expenditures	(7,700)	417	8,117	14
Other financing sources (uses):				
Operating transfers in	2,273	2,297	24	2,181
Net change in fund balance	(5,427)	2,714	8,141	2,195
Fund balance:				
Beginning of year	9,880	15,895	6,015	13,700
End of year	$ 4,453	$ 18,609	$ 14,156	$ 15,895

LINCOLN COUNTY, NEVADA
NONMAJOR PANACA TOWN CAPITAL PROJECTS FUND
COMPARATIVE BALANCE SHEETS
June 30, 2019 and 2018

	2019	2018
ASSETS		
Pooled cash and investments	$ 14,983	$ 11,416
Interest receivable	38	56
Total assets	$ 15,021	$ 11,472
LIABILITIES		
Accounts payable	$ -	$ -
FUND BALANCE		
Restricted	15,021	11,472
Total liabilities and fund balance	$ 15,021	$ 11,472

LINCOLN COUNTY, NEVADA
NONMAJOR PANACA TOWN CAPITAL PROJECTS FUND
SCHEDULE OF REVENUES, EXPENDITURES, AND CHANGES IN FUND BALANCE - BUDGET (GAAP BASIS) AND ACTUAL
Year Ended June 30, 2019
(With Comparative Actual Amounts for Year Ended June 30, 2018)

	2019		Variance - Positive	2018
	Budget	Actual	(Negative)	Actual
Revenues:				
Miscellaneous:				
Investment income	$ 10	$ 332	$ 322	$ 12
Other	-	-	-	226
Total revenues	10	332	322	238
Expenditures:				
Current:				
Capital projects:				
Services and supplies	-	1,378	(1,378)	-
Capital outlay	9,000	-	9,000	4,227
Total expenditures	9,000	1,378	7,622	4,227
Excess (deficiency) of revenues over expenditures	(8,990)	(1,046)	7,944	(3,989)
Other financing sources (uses):				
Operating transfers in	4,549	4,595	46	4,363
Net change in fund balance	(4,441)	3,549	7,990	374
Fund balance:				
Beginning of year	6,585	11,472	4,887	11,098
End of year	$ 2,144	$ 15,021	$ 12,877	$ 11,472

LINCOLN COUNTY, NEVADA
NONMAJOR AMBULANCE CAPITAL PROJECTS FUND
COMPARATIVE BALANCE SHEETS
June 30, 2019 and 2018

	2019	2018
ASSETS		
Pooled cash and investments	$ 12,153	$ 11,878
Interest receivable	28	54
Total assets	$ 12,181	$ 11,932
LIABILITIES		
Accounts payable	$ -	$ -
FUND BALANCE		
Restricted	12,181	11,932
Total liabilities and fund balance	$ 12,181	$ 11,932

LINCOLN COUNTY, NEVADA
NONMAJOR AMBULANCE CAPITAL PROJECTS FUND
SCHEDULE OF REVENUES, EXPENDITURES, AND CHANGES IN FUND BALANCE - BUDGET (GAAP BASIS) AND ACTUAL
Year Ended June 30, 2019
(With Comparative Actual Amounts for Year Ended June 30, 2018)

	2019			
	Budget	Actual	Variance-Positive (Negative)	2018 Actual
Miscellaneous:				
Investment income	$ -	$ 249	$ 249	$ 11
Expenditures:				
Current:				
Capital projects:				
Capital outlay	25,451	-	25,451	-
Excess (deficiency) of revenues over expenditures	(25,451)	249	25,700	11
Fund balance:				
Beginning of year	25,451	11,932	(13,519)	11,921
End of year	$ -	$ 12,181	$ 12,181	$ 11,932

LINCOLN COUNTY, NEVADA
NONMAJOR FAIR BOARD CAPITAL PROJECTS FUND
COMPARATIVE BALANCE SHEETS
June 30, 2019 and 2018

	2019	2018
ASSETS		
Pooled cash and investments	$ 24,145	$ 29,285
Interest receivable	56	130
Total assets	$ 24,201	$ 29,415
LIABILITIES		
Accounts payable	$ 201	$ -
FUND BALANCE		
Restricted	24,000	29,415
Total liabilities and fund balance	$ 24,201	$ 29,415

LINCOLN COUNTY, NEVADA
NONMAJOR FAIR BOARD CAPITAL PROJECTS FUND
SCHEDULE OF REVENUES, EXPENDITURES, AND CHANGES IN FUND BALANCE - BUDGET (GAAP BASIS) AND ACTUAL
Year Ended June 30, 2019
(With Comparative Actual Amounts for Year Ended June 30, 2018)

	2019 Budget	2019 Actual	Variance - Positive (Negative)	2018 Actual
Revenues:				
Miscellaneous:				
Investment income	$ 200	$ 497	$ 297	$ 27
Expenditures:				
Current:				
Capital projects:				
Services and supplies	-	912	(912)	-
Capital outlay	5,986	5,000	986	4,000
Total expenditures	5,986	5,912	74	4,000
Excess (deficiency) of revenues over expenditures	(5,786)	(5,415)	371	(3,973)
Fund balance:				
Beginning of year	5,786	29,415	23,629	33,388
End of year	$ -	$ 24,000	$ 24,000	$ 29,415

LINCOLN COUNTY, NEVADA
NONMAJOR VEHICLE CAPITAL PROJECTS FUND
COMPARATIVE BALANCE SHEETS
June 30, 2019 and 2018

	2019	2018
ASSETS		
Pooled cash and investments	$ 7,728	$ 13,380
Interest receivable	23	49
Total assets	$ 7,751	$ 13,429
LIABILITIES		
Accounts payable	$ -	$ -
FUND BALANCE		
Restricted	7,751	13,429
Total liabilities and fund balance	$ 7,751	$ 13,429

LINCOLN COUNTY, NEVADA
NONMAJOR VEHICLE CAPITAL PROJECTS FUND
SCHEDULE OF REVENUES, EXPENDITURES, AND CHANGES IN FUND BALANCE - BUDGET (GAAP BASIS) AND ACTUAL
Year Ended June 30, 2019
(With Comparative Actual Amounts for Year Ended June 30, 2018)

	2019 Budget	2019 Actual	Variance - Positive (Negative)	2018 Actual
Revenues:				
Miscellaneous:				
Investment income	$ -	$ 201	$ 201	$ 10
Expenditures:				
Current:				
Capital projects:				
Capital outlay	223,245	181,144	42,101	42,007
Debt service:				
Principal	59,966	77,146	(17,180)	68,240
Interest	1,798	1,834	(36)	5,472
Total debt service	61,764	78,980	(17,216)	73,712
Total expenditures	285,009	260,124	24,885	115,719
Excess (deficiency) of revenues over expenditures	(285,009)	(259,923)	25,086	(115,709)
Other financing sources (uses):				
Operating transfers in	121,000	121,000	-	114,000
Sale of capital assets	15,000	-	(15,000)	14,798
Capital lease proceeds	133,245	133,245	-	-
Total other financing sources (uses)	269,245	254,245	(15,000)	128,798
Net change in fund balance	(15,764)	(5,678)	10,086	13,089
Fund balance:				
Beginning of year	16,000	13,429	(2,571)	340
End of year	$ 236	$ 7,751	$ 7,515	$ 13,429

LINCOLN COUNTY, NEVADA
NONMAJOR ROAD EQUIPMENT CAPITAL PROJECTS FUND
COMPARATIVE BALANCE SHEETS
June 30, 2019 and 2018

	2019	2018
ASSETS		
Pooled cash and investments	$ 185,592	$ 82,326
Interest receivable	399	144
Total assets	$ 185,991	$ 82,470
FUND BALANCE		
Restricted	$ 185,991	$ 82,470

LINCOLN COUNTY, NEVADA
NONMAJOR ROAD EQUIPMENT CAPITAL PROJECTS FUND
SCHEDULE OF REVENUES, EXPENDITURES, AND CHANGES IN FUND BALANCE - BUDGET (GAAP BASIS) AND ACTUAL
Year Ended June 30, 2019
(With Comparative Actual Amounts for Year Ended June 30, 2018)

	2019			
	Budget	Actual	Variance - Positive (Negative)	2018 Actual
Revenues:				
Miscellaneous:				
Investment income	$ -	$ 3,521	$ 3,521	$ 30
Expenditures:				
Current:				
Capital projects:				
Capital outlay	100,000	-	100,000	190,645
Excess (deficiency) of revenues over expenditures	(100,000)	3,521	103,521	(190,615)
Other financing sources (uses):				
Operating transfers in	100,000	100,000	-	100,000
Sale of capital assets	-	-	-	38,946
Total other financing sources	100,000	100,000	-	138,946
Net change in fund balance	-	103,521	103,521	(51,669)
Fund balance:				
Beginning of year	44,139	82,470	38,331	134,139
End of year	$ 44,139	$ 185,991	$ 141,852	$ 82,470

LINCOLN COUNTY, NEVADA
NONMAJOR AIRPORT CAPITAL PROJECTS FUND
COMPARATIVE BALANCE SHEETS
June 30, 2019 and 2018

	2019	2018
ASSETS		
Pooled cash and investments	$ 3,013	$ 2,953
Interest receivable	6	15
Total assets	$ 3,019	$ 2,968
LIABILITIES		
Accounts payable	$ -	$ -
FUND BALANCE		
Restricted	3,019	2,968
Total liabilities and fund balance	$ 3,019	$ 2,968

LINCOLN COUNTY, NEVADA
NONMAJOR AIRPORT CAPITAL PROJECTS FUND
SCHEDULE OF REVENUES, EXPENDITURES, AND CHANGES IN FUND BALANCE - BUDGET (GAAP BASIS) AND ACTUAL
Year Ended June 30, 2019
(With Comparative Actual Amounts for the Year Ended June 30, 2018)

	2019		Variance - Positive	2018
	Budget	Actual	(Negative)	Actual
Revenues				
Miscellaneous:				
Investment income	$ -	$ 51	$ 51	$ 3
Expenditures:				
Curent:				
Capital projects:				
Capital outlay	2,900	-	2,900	-
Excess (deficiency) of revenues over expenditures	(2,900)	51	2,951	3
Fund balance:				
Beginning of year	2,965	2,968	3	2,965
End of year	$ 65	$ 3,019	$ 2,954	$ 2,968

LINCOLN COUNTY, NEVADA
NONMAJOR LINCOLN COUNTY LAND ACT CAPITAL PROJECTS FUND
COMPARATIVE BALANCE SHEETS
June 30, 2019 and 2018

	2019	2018
ASSETS		
Pooled cash and investments	$ 30,348	$ 29,774
Interest receivable	67	52
Total assets	$ 30,415	$ 29,826
LIABILITIES		
Accounts payable	$ -	$ -
FUND BALANCE		
Restricted	30,415	29,826
Total liabilities and fund balance	$ 30,415	$ 29,826

LINCOLN COUNTY, NEVADA
NONMAJOR LINCOLN COUNTY LAND ACT CAPITAL PROJECTS FUND
SCHEDULE OF REVENUES, EXPENDITURES, AND CHANGES
IN FUND BALANCE - BUDGET (GAAP BASIS) AND ACTUAL
Year Ended June 30, 2019
(With Comparative Actual Amounts for the Year Ended June 30, 2018)

	2019			
	Budget	Actual	Variance - Positive (Negative)	2018 Actual
Revenues:				
Miscellaneous:				
Investment income	$ -	$ 589	$ 589	$ 11
Expenditures:				
Current:				
Capital projects:				
Capital outlay	29,815	-	29,815	-
Excess (deficiency) of revenues over expenditures	(29,815)	589	30,404	11
Fund balance:				
Beginning of year	29,815	29,826	11	29,815
End of year	$ -	$ 30,415	$ 30,415	$ 29,826

LINCOLN COUNTY, NEVADA
NONMAJOR LINCOLN COUNTY WATER CAPITAL PROJECTS FUND
COMPARATIVE BALANCE SHEETS
June 30, 2019 and 2018

	2019	2018
ASSETS		
Pooled cash and investments	$ 80,189	$ 78,671
Interest receivable	176	139
Total assets	$ 80,365	$ 78,810
LIABILITIES		
Accounts payable	$ -	$ -
FUND BALANCE		
Restricted	80,365	78,810
Total liabilities and fund balance	$ 80,365	$ 78,810

LINCOLN COUNTY, NEVADA
NONMAJOR LINCOLN COUNTY WATER CAPITAL PROJECTS FUND
SCHEDULE OF REVENUES, EXPENDITURES, AND CHANGES
IN FUND BALANCE - BUDGET (GAAP BASIS) AND ACTUAL
Year Ended June 30, 2019
(With Comparative Actual Amounts for the Year Ended June 30, 2018)

	2019			
	Budget	Actual	Variance - Positive (Negative)	2018 Actual
Revenues:				
Miscellaneous:				
Investment income	$ -	$ 1,555	$ 1,555	$ 28
Expenditures:				
Current:				
Capital projects:				
Capital outlay	78,782	-	78,782	-
Excess (deficiency) of revenues over expenditures	(78,782)	1,555	80,337	28
Fund balance:				
Beginning of year	78,782	78,810	28	78,782
End of year	$ -	$ 80,365	$ 80,365	$ 78,810

LINCOLN COUNTY, NEVADA
NONMAJOR LINCOLN COUNTY WATER DISTRICT CAPITAL PROJECTS FUND
COMPARATIVE BALANCE SHEETS
June 30, 2019 and 2018

	2019	2018
ASSETS		
Pooled cash and investments	$ 710,908	$ 695,339
Interest receivable	3,071	2,403
Total assets	$ 713,979	$ 697,742
LIABILITIES		
Accounts payable	$ -	$ -
FUND BALANCE		
Restricted	713,979	697,742
Total liabilities and fund balance	$ 713,979	$ 697,742

LINCOLN COUNTY, NEVADA
NONMAJOR LINCOLN COUNTY WATER DISTRICT CAPITAL PROJECTS FUND
SCHEDULE OF REVENUES, EXPENDITURES, AND CHANGES
IN FUND BALANCE - BUDGET (GAAP BASIS) AND ACTUAL
Year Ended June 30, 2019
(With Comparative Actual Amounts for the Year Ended June 30, 2018)

	2019			
	Budget	Actual	Variance - Positive (Negative)	2018 Actual
Revenues:				
Miscellaneous:				
Investment income	$ 7,500	$ 25,129	$ 17,629	$ (1,883)
Expenditures:				
Current:				
Capital projects:				
Capital outlay	721,975	8,892	713,083	7,350
Excess (deficiency) of revenues over expenditures	(714,475)	16,237	730,712	(9,233)
Fund balance:				
Beginning of year	714,475	697,742	(16,733)	706,975
End of year	$ -	$ 713,979	$ 713,979	$ 697,742

LINCOLN COUNTY, NEVADA
NONMAJOR ENTERPRISE FUNDS
COMBINING STATEMENT OF NET POSITION
June 30, 2019
With Comparative Total for June 30, 2018

	Pioche Public Water Utility	Pioche Public Sewer Utility	Building Department
ASSETS			
Current assets:			
Pooled cash and investments	$ 164,571	$ 223,063	$ 22,825
Accounts receivable	19,688	10,692	-
Interest receivable	185	259	46
Total current assets	184,444	234,014	22,871
Restricted assets:			
Cash	20,748	11,490	-
Capital assets:			
Land	2,000	10,000	-
Property, plant and equipment (net of depreciation)	472,439	547,509	476
Total capital assets	474,439	557,509	476
Total assets	679,631	803,013	23,347
DEFERRED OUTFLOWS OF RESOURCES			
Deferred pension charge	11,678	6,874	19,809
Deferred opeb	1,762	1,762	-
Total deferred outflows of resources	13,440	8,636	19,809
LIABILITIES			
Current liabilities:			
Accounts payable	5,643	901	136
Accrued payroll and benefits	5,057	2,738	6,920
Customer deposits	90	-	-
Accrued compensated absences	4,750	2,250	7,680
Accrued interest payable	-	1,312	-
Total current liabilities	15,540	7,201	14,736
Current liabilities payable from restricted assets:			
Revenue bond	7,336	3,294	-
Non-current liabilities:			
Accrued compensated absences	3,376	1,913	4,710
Net pension liability	89,376	45,689	100,445
OPEB liability	31,232	31,233	-
Revenue bond	-	177,489	-
Total non-current liabilities	123,984	256,324	105,155
Total liabilities	146,860	266,819	119,891
DEFERRED INFLOWS OF RESOURCES			
Deferred pension charge	8,232	5,060	12,836
NET POSITION			
Invested in capital assets, net of related debt	467,103	376,726	476
Restricted for revenue bond debt service	20,748	11,490	-
Unrestricted	50,128	151,554	(90,047)
Total net position	$ 537,979	$ 539,770	$ (89,571)

Totals	
2019	2018
$ 410,459	$ 335,096
30,380	34,983
490	296
441,329	370,375
32,238	32,238
12,000	12,000
1,020,424	1,048,518
1,032,424	1,060,518
1,505,991	1,463,131
38,361	38,065
3,524	3,524
41,885	41,589
6,680	22,733
14,715	13,952
90	1,760
14,680	13,026
1,312	1,336
37,477	52,807
10,630	22,691
9,999	8,951
235,510	234,750
62,465	61,859
177,489	188,421
485,463	493,981
533,570	569,479
26,128	27,175
844,305	849,406
32,238	32,238
111,635	26,422
$ 988,178	$ 908,066

LINCOLN COUNTY, NEVADA
NONMAJOR ENTERPRISE FUNDS
COMBINING SCHEDULE OF REVENUES, EXPENSES, AND CHANGES IN NET POSITION
Year Ended June 30, 2019
With Comparative Total for June 30, 2018

	Pioche Public Water Utility	Pioche Public Sewer Utility	Building Department
Operating revenues:			
Charges for services	$ 177,340	$ 94,857	$ 24,169
Operating expenses:			
Salaries and wages	42,886	24,680	44,023
Employee benefits	22,698	13,297	28,843
Services and supplies	69,564	29,308	3,518
Depreciation	29,152	23,379	475
Total operating expenses	164,300	90,664	76,859
Operating income (loss)	13,040	4,193	(52,690)
Non-operating revenues (expenses):			
Investment income	1,629	2,285	412
Operating transfers in	-	-	40,000
Capital fees	45,782	23,489	-
Custom fees	9,605	1,266	-
Interest expense	(909)	(7,990)	-
Total non-operating revenues (expenses)	56,107	19,050	40,412
Change in net position	69,147	23,243	(12,278)
Net Position:			
Beginning of year	468,832	516,527	(77,293)
End of year	$ 537,979	$ 539,770	$ (89,571)

Totals	
2019	2018
$ 296,366	$ 268,007
111,589	119,377
64,838	70,800
102,390	141,417
53,006	51,553
331,823	383,147
(35,457)	(115,140)
4,326	63
40,000	40,000
69,271	56,635
10,871	6,139
(8,899)	(9,700)
115,569	93,137
80,112	(22,003)
908,066	930,069
$ 988,178	$ 908,066

LINCOLN COUNTY, NEVADA
NONMAJOR ENTERPRISE FUNDS
COMBINING STATEMENT OF CASH FLOWS
Year Ended June 30, 2019
With Comparative Total for June 30, 2018

	Pioche Public Water Utility	Pioche Public Sewer Utility
Cash flows from operating activities:		
Cash received from customers	$ 180,197	$ 94,933
Cash paid for services and supplies	(84,691)	(29,771)
Cash paid for salaries and benefits	(64,911)	(37,178)
Net cash provided (used) by operating activities	30,595	27,984
Cash flows from noncapital financing activities:		
Operating transfers in/out	-	-
Cash flows from capital and related financing activities:		
Purchases of capital assets	(24,912)	-
Capital fees	45,782	23,489
Custom fees	9,605	1,266
Debt retirement	(19,839)	(3,154)
Interest paid	(909)	(8,014)
Net cash provided (used) by capital and related financing activities	9,727	13,587
Cash flows from investing activities:		
Investment income	1,572	2,165
Net change in cash and cash equivalents	41,894	43,736
Cash:		
Beginning of year	143,425	190,817
End of year	$ 185,319	$ 234,553
Reconciliation of operating income (loss) to net cash provided (used) by operating activities:		
Operating income (loss)	$ 13,040	$ 4,193
Adjustments to reconcile operating income (loss) to net cash provided (used) by operating activities:		
Depreciation expense	29,152	23,379
(Increase) decrease in accounts receivable	4,527	76
(Increase) decrease in due from others	-	-
Increase (decrease) in accounts payable	(15,127)	(463)
Increase (decrease) in accrued payroll and benefits	(42)	(44)
Increase (decrease) in compensated absences	189	96
Increase (decrease) in net pension liability	377	124
Increase (decrease) in net pension expense	(153)	319
Increase (decrease) in OPEB liability	302	304
Increase (decrease) in OPEB expense	-	-
Increase (decrease) in customer deposits	(1,670)	-
Total adjustments	17,555	23,791
Net cash provided (used) by operating activities	$ 30,595	$ 27,984

Building Department	Totals 2019	2018
$ 24,169	$ 299,299	$ 267,105
(3,981)	(118,443)	(133,301)
(70,850)	(172,939)	(183,708)
(50,662)	7,917	(49,904)
40,000	40,000	40,000
-	(24,912)	-
-	69,271	56,635
-	10,871	6,139
-	(22,993)	(21,894)
-	(8,923)	(10,022)
-	23,314	30,858
395	4,132	214
(10,267)	75,363	21,168
33,092	367,334	346,166
$ 22,825	$ 442,697	$ 367,334
$ (52,690)	$ (35,457)	$ (115,140)
475	53,006	51,553
-	4,603	(1,412)
-	-	-
(463)	(16,053)	8,116
849	763	3,218
2,417	2,702	753
259	760	(13,070)
(1,509)	(1,343)	14,439
-	606	61,859
-	-	(60,730)
-	(1,670)	510
2,028	43,374	65,236
$ (50,662)	$ 7,917	$ (49,904)

LINCOLN COUNTY, NEVADA
NONMAJOR PIOCHE PUBLIC UTILITY WATER ENTERPRISE FUND
COMPARATIVE STATEMENT OF NET POSITION
June 30, 2019 and 2018

	2019	2018
ASSETS		
Current assets:		
Pooled cash and investments	$ 164,571	$ 122,677
Accounts receivable	19,688	24,215
Interest receivable	185	128
Total current assets	184,444	147,020
Restricted assets:		
Cash	20,748	20,748
Capital assets:		
Land	2,000	2,000
Property, plant and equipment (net of depreciation)	472,439	476,679
Total capital assets	474,439	478,679
Total assets	679,631	646,447
DEFERRED OUTFLOWS OF RESOURCES		
Deferred pension charge	11,678	12,927
Deferred opeb	1,762	1,762
Total deferred outflows of resources	13,440	14,689
LIABILITIES		
Current liabilities:		
Accounts payable	5,643	20,770
Accrued payroll and benefits	5,057	5,099
Customer deposits	90	1,760
Accrued compensated absences	4,750	4,640
Total current liabilities	15,540	32,269
Current liabilities payable from restricted assets:		
Revenue bond	7,336	19,537
Non-current liabilities:		
Accrued compensated absences	3,376	3,297
Net pension liability	89,376	88,999
OPEB liability	31,232	30,930
Revenue bond	-	7,638
Total non-current liabilities	123,984	130,864
Total liabilities	146,860	182,670
DEFERRED INFLOWS OF RESOURCES		
Deferred pension charge	8,232	9,634
NET POSITION		
Invested in capital assets, net of related debt	467,103	451,504
Restricted for revenue bond debt service	20,748	20,748
Unrestricted	50,128	(3,420)
Total net position	$ 537,979	$ 468,832

LINCOLN COUNTY, NEVADA
NONMAJOR PIOCHE PUBLIC UTILITY WATER ENTERPRISE FUND
SCHEDULE OF REVENUES, EXPENSES, AND CHANGES IN NET POSITION - BUDGET (GAAP BASIS) AND ACTUAL
Year Ended June 30, 2019
(With Comparative Actual Amounts for Year Ended June 30, 2018)

	2019		Variance-Positive	2018
	Budget	Actual	(Negative)	Actual
Operating revenues:				
Water	$ 199,500	$ 177,340	$ (22,160)	$ 136,855
Operating expenses:				
Water:				
Salaries and wages	58,125	42,886	15,239	48,616
Employee benefits	34,636	22,698	11,938	25,911
Services and supplies	86,140	69,564	16,576	104,060
Depreciation	32,000	29,152	2,848	27,008
Total operating expenses	210,901	164,300	46,601	205,595
Operating income (loss)	(11,401)	13,040	24,441	(68,740)
Non-operating revenues (expenses):				
Investment income	-	1,629	1,629	27
Water capital fees	34,000	45,782	11,782	34,372
Water custom fees	5,000	9,605	4,605	4,916
Interest expense	(1,211)	(909)	302	(1,875)
Total non-operating revenues (expenses)	37,789	56,107	18,318	37,440
Change in net position	$ 26,388	69,147	$ 42,759	(31,300)
Net Position:				
Beginning balance		468,832		500,132
End of year		$ 537,979		$ 468,832

LINCOLN COUNTY, NEVADA
NONMAJOR PIOCHE PUBLIC UTILITY WATER ENTERPRISE FUND
COMPARATIVE STATEMENT OF CASH FLOWS
June 30, 2019 and 2018

	2019	2018
Cash flows from operating activities:		
Cash received from customers	$ 180,197	$ 137,324
Cash paid for services and supplies	(84,691)	(93,157)
Cash paid for salaries and benefits	(64,911)	(71,375)
Net cash provided (used) by operating activities	30,595	(27,208)
Cash flows from capital and related financing activities:		
Purchases of capital assets	(24,912)	-
Capital fees	45,782	34,372
Custom fees	9,605	4,916
Debt retirement	(19,839)	(18,873)
Interest paid	(909)	(1,875)
Net cash provided (used) by capital and related financing activities	9,727	18,540
Cash flows from investing activities:		
Investment income	1,572	40
Net change in cash and cash equivalents	41,894	(8,628)
Cash:		
Beginning of year	143,425	152,053
End of year	$ 185,319	$ 143,425
Reconciliation of operating income (loss) to net cash provided (used) by operating activities:		
Operating income (loss)	$ 13,040	$ (68,740)
Adjustments to reconcile operating income (loss) to net cash provided (used) by operating activities:		
Depreciation expense	29,152	27,008
(Increase) decrease in accounts receivable	4,527	(41)
Increase (decrease) in accounts payable	(15,127)	10,903
Increase (decrease) in accrued payroll and benefits	(42)	1,898
Increase (decrease) in compensated absences	189	(364)
Increase (decrease) in net pension liability	377	(5,341)
Increase (decrease) in net pension expense	(153)	6,394
Increase (decrease) in OPEB liability	302	30,930
Increase (decrease) in OPEB expense	-	(30,365)
Increase (decrease) in customer deposits	(1,670)	510
Total adjustments	17,555	41,532
Net cash provided (used) by operating activities	$ 30,595	$ (27,208)

LINCOLN COUNTY, NEVADA
NONMAJOR PIOCHE PUBLIC UTILITY SEWER ENTERPRISE FUND
COMPARATIVE STATEMENT OF NET POSITION
June 30, 2019 and 2018

	2019	2018
ASSETS		
Current assets:		
Pooled cash and investments	$ 223,063	$ 179,327
Accounts receivable	10,692	10,768
Interest receivable	259	139
Total current assets	234,014	190,234
Restricted assets:		
Cash	11,490	11,490
Capital assets:		
Land	10,000	10,000
Property, plant and equipment (net of depreciation)	547,509	570,888
Total capital assets	557,509	580,888
Total assets	803,013	782,612
DEFERRED OUTFLOWS OF RESOURCES		
Deferred pension charge	6,874	7,210
Deferred opeb	1,762	1,762
Total deferred outflows of resources	8,636	8,972
LIABILITIES		
Current liabilities:		
Accounts payable	901	1,364
Accrued payroll and benefits	2,738	2,782
Accrued compensated absences	2,250	2,203
Accrued interest payable	1,312	1,336
Total current liabilities	7,201	7,685
Current liabilities payable from restricted assets:		
Revenue bond	3,294	3,154
Non-current liabilities:		
Accrued compensated absences	1,913	1,864
Net pension liability	45,689	45,565
OPEB liability	31,233	30,929
Revenue bond	177,489	180,783
Total non-current liabilities	256,324	259,141
Total liabilities	266,819	269,980
DEFERRED INFLOWS OF RESOURCES		
Deferred pension charge	5,060	5,077
NET POSITION		
Invested in capital assets, net of related debt	376,726	396,951
Restricted for revenue bond debt service	11,490	11,490
Unrestricted	151,554	108,086
Total net position	$ 539,770	$ 516,527

LINCOLN COUNTY, NEVADA
NONMAJOR PIOCHE PUBLIC UTILITY SEWER ENTERPRISE FUND
SCHEDULE OF REVENUES, EXPENSES, AND CHANGES IN NET POSITION - BUDGET (GAAP BASIS) AND ACTUAL
Year Ended June 30, 2019
(With Comparative Actual Amounts for Year Ended June 30, 2018)

	2019 Budget	2019 Actual	Variance-Positive (Negative)	2018 Actual
Operating revenues:				
Sewer	$ 90,500	$ 94,857	$ 4,357	$ 113,303
Operating expenses:				
Sewer				
Salaries and wages	28,367	24,680	3,687	29,548
Employee benefits	19,050	13,297	5,753	15,948
Services and supplies	32,459	29,308	3,151	30,524
Depreciation	27,000	23,379	3,621	23,664
Total operating expenses	106,876	90,664	16,212	99,684
Operating income (loss)	(16,376)	4,193	20,569	13,619
Non-operating revenues (expenses):				
Investment income	-	2,285	2,285	29
Sewer capital fees	20,000	23,489	3,489	22,263
Sewer custom fees	-	1,266	1,266	1,223
Interest expense	(8,014)	(7,990)	24	(7,825)
Total non-operating revenues (expenses)	11,986	19,050	7,064	15,690
Change in net position	$ (4,390)	23,243	$ 27,633	29,309
Net Position:				
Beginning balance		516,527		487,218
End of year		$ 539,770		$ 516,527

LINCOLN COUNTY, NEVADA
NONMAJOR PIOCHE PUBLIC UTILITY SEWER ENTERPRISE FUND
COMPARATIVE STATEMENT OF CASH FLOWS
June 30, 2019 and 2018

	2019	2018
Cash flows from operating activities:		
Cash received from customers	$ 94,933	$ 111,932
Cash paid for services and supplies	(29,771)	(32,599)
Cash paid for salaries and benefits	(37,178)	(44,052)
Net cash provided (used) by operating activities	27,984	35,281
Cash flows from capital and related financing activities:		
Capital fees	23,489	22,263
Custom fees	1,266	1,223
Debt retirement	(3,154)	(3,021)
Interest paid	(8,014)	(8,147)
Net cash provided (used) by capital and related financing activities	13,587	12,318
Cash flows from investing activities:		
Investment income	2,165	104
Net change in cash and cash equivalents	43,736	47,703
Cash:		
Beginning of year	190,817	143,114
End of year	$ 234,553	$ 190,817
Reconciliation of operating income (loss) to net cash provided (used) by operating activities:		
Operating income (loss)	$ 4,193	$ 13,619
Adjustments to reconcile operating income (loss) to net cash provided (used) by operating activities:		
Depreciation expense	23,379	23,664
(Increase) decrease in accounts receivable	76	(1,371)
Increase (decrease) in accounts payable	(463)	(2,075)
Increase (decrease) in accrued payroll and benefits	(44)	909
Increase (decrease) in compensated absences	96	(186)
Increase (decrease) in net pension liability	124	(2,654)
Increase (decrease) in net pension expense	319	2,811
Increase (decrease) in OPEB liability	304	30,929
Increase (decrease) in OPEB expense	-	(30,365)
Total adjustments	23,791	21,662
Net cash provided (used) by operating activities	$ 27,984	$ 35,281

LINCOLN COUNTY, NEVADA
NONMAJOR BUILDING DEPARTMENT ENTERPRISE FUND
COMPARATIVE STATEMENT OF NET POSITION
June 30, 2019 and 2018

	2019	2018
ASSETS		
Current assets:		
Pooled cash and investments	$ 22,825	$ 33,092
Interest receivable	46	29
Capital assets:		
Property and equipment (net of depreciation)	476	951
Total assets	23,347	34,072
DEFERRED OUTFLOWS OF RESOURCES		
Deferred pension charge	19,809	17,928
LIABILITIES		
Current liabilities:		
Accounts payable	136	599
Accrued payroll and benefits	6,920	6,071
Accrued compensated absences	7,680	6,183
Total current liabilities	14,736	12,853
Non-current liabilities:		
Accrued compensated absences	4,710	3,790
Net pension liability	100,445	100,186
Total non-current liabilities	105,155	103,976
Total liabilities	119,891	116,829
DEFERRED INFLOWS OF RESOURCES		
Deferred pension charge	12,836	12,464
NET POSITION		
Invested in capital assets, net of related debt	476	951
Unrestricted	(90,047)	(78,244)
Total net position	$ (89,571)	$ (77,293)

LINCOLN COUNTY, NEVADA
NONMAJOR BUILDING DEPARTMENT ENTERPRISE FUND
SCHEDULE OF REVENUES, EXPENSES, AND CHANGES IN NET POSITION - BUDGET (GAAP BASIS) AND ACTUAL
Year Ended June 30, 2019
(With Comparative Actual Amounts for Year Ended June 30, 2018)

	2019 Budget	2019 Actual	Variance-Positive (Negative)	2018 Actual
Operating revenues:				
Charges for services	$ 20,000	$ 24,169	$ 4,169	$ 17,849
Operating expenses:				
Public works:				
Salaries and wages	51,967	44,023	7,944	41,213
Employee benefits	16,347	28,843	(12,496)	28,941
Service and supplies	11,160	3,518	7,642	6,833
Depreciation	1,000	475	525	881
Total operating expenses	80,474	76,859	3,615	77,868
Operating income (loss)	(60,474)	(52,690)	7,784	(60,019)
Non-operating revenues (expenses):				
Investment income	-	412	412	7
Operating transfers in	40,000	40,000	-	40,000
Total non-operating revenues (expenses)	40,000	40,412	412	40,007
Change in net position	$ (20,474)	(12,278)	8,196	(20,012)
Net Position:				
Beginning balance		(77,293)		(57,281)
End of year		$ (89,571)		$ (77,293)

LINCOLN COUNTY, NEVADA
NONMAJOR BUILDING DEPARTMENT ENTERPRISE FUND
COMPARATIVE STATEMENT OF CASH FLOWS
Years Ended June 30, 2019 and 2018

	2019	2018
Cash flows from operating activities:		
Cash received from customers	$ 24,169	$ 17,849
Cash paid for services and supplies	(3,981)	(7,545)
Cash paid for salaries and benefits	(70,850)	(68,281)
Net cash provided (used) by operating activities	(50,662)	(57,977)
Cash flows from noncapital financing activities:		
Operating transfers in	40,000	40,000
Cash flows from investing activities:		
Investment income	395	70
Net change in cash and cash equivalents	(10,267)	(17,907)
Cash:		
Beginning of year	33,092	50,999
End of year	$ 22,825	$ 33,092
Reconciliation of operating income to net cash provided (used) by operating activities:		
Operating income (loss)	$ (52,690)	$ (60,019)
Adjustments to reconcile operating income to net cash provided (used) by operating activities:		
Depreciation expense	475	881
Increase (decrease) in accounts payable	(463)	(712)
Increase (decrease) in accrued payroll and benefits	849	411
Increase (decrease) in compensated absences	2,417	1,303
Increase (decrease) in net pension liability	259	(5,075)
Increase (decrease) in net pension expense	(1,509)	5,234
Total adjustments	2,028	2,042
Net cash provided (used) by operating activities	$ (50,662)	$ (57,977)

LINCOLN COUNTY, NEVADA
AGENCY FUNDS
COMBINING STATEMENT OF NET POSITION
June 30, 2019
(With Comparative Totals for June 30, 2018)

	Tax Trust	State	Caliente City	Caliente City Capital Projects	Fish and Game
ASSETS					
Pooled cash and investments	$ 24,162	$ 71,613	$ 9,897	$ 243	$ 879
Interest receivable	51	-	27	-	-
Taxes receivable	-	6,677	3,157	-	-
Due from other governments	-	-	-	-	-
Total assets	$ 24,213	$ 78,290	$ 13,081	$ 243	$ 879
LIABILITIES					
Amount held for others	$ 24,213	$ 72,987	$ 10,708	$ 243	$ 879
Unavailable revenue - taxes	-	5,303	2,373	-	-
Total liabilities	$ 24,213	$ 78,290	$ 13,081	$ 243	$ 879

Range	School General	School Debt Service	Lincoln County TV District	Pahranagat Fire District	Public Land	Hospital
$ 13,799	$ 209,072	$ 83,967	$ 3,187	$ 14,639	$ 208	$ 69,265
100	-	1,126	-	39	-	-
-	25,724	7,650	-	1,012	-	9,188
28,635	1	-	-	9,565	-	-
$ 42,534	$ 234,797	$ 92,743	$ 3,187	$ 25,255	$ 208	$ 78,453
$ 42,534	$ 214,390	$ 86,673	$ 3,187	$ 24,517	$ 208	$ 71,165
-	20,407	6,070	-	738	-	7,288
$ 42,534	$ 234,797	$ 92,743	$ 3,187	$ 25,255	$ 208	$ 78,453

LINCOLN COUNTY, NEVADA
AGENCY FUNDS
COMBINING STATEMENT OF NET POSITION
June 30, 2018
(With Comparative Totals for June 30, 2018)

	Panaca Fire Protection District	Pioche Fire District	Pioche Fire District Capital Projects	Pioche Fire Emergency	Coyote Springs GID
ASSETS					
Pooled cash and investments	$ 9,112	$ 50,968	$ 1,546	$ 5,509	$ 150,297
Interest receivable	194	466	27	65	1,844
Taxes receivable	1,826	592	-	-	-
Due from other governments	-	10,282	-	-	-
Total assets	$ 11,132	$ 62,308	$ 1,573	$ 5,574	$ 152,141
LIABILITIES					
Amount held for others	$ 9,717	$ 61,719	$ 1,573	$ 5,574	$ 152,141
Unavailable revenue - taxes	1,415	589	-	-	-
Total liabilities	$ 11,132	$ 62,308	$ 1,573	$ 5,574	$ 152,141

SB 371	SLCHCP GID	Lincoln County Fire Protection District	Lincoln County Fire Protection District Emergency	Totals 2019	2018
$ 75	$ 160,145	$ 314,504	$ 50,012	$ 1,243,099	$ 696,316
-	2,721	3,019	520	10,199	10,894
-	-	3,162	-	58,988	56,719
-	-	-	-	48,483	31,548
$ 75	$ 162,866	$ 320,685	$ 50,532	$ 1,360,769	$ 795,477
$ 75	$ 162,866	$ 318,234	$ 50,532	$ 1,314,135	$ 749,282
-	-	2,451	-	46,634	46,195
$ 75	$ 162,866	$ 320,685	$ 50,532	$ 1,360,769	$ 795,477

LINCOLN COUNTY, NEVADA
COMBINING STATEMENT OF CHANGES IN ASSETS
AND LIABILITIES - ALL AGENCY FUNDS
Year Ended June 30, 2019

	Balance July 1, 2018	Additions	Deductions	Balance June 30, 2019
Tax Trust				
Assets:				
Pooled cash and investments	$ 21,294	$ 23,626	$ 20,758	$ 24,162
Interest receivable	37	51	37	51
Total assets	$ 21,331	$ 23,677	$ 20,795	$ 24,213
Liabilities:				
Amount held for others	$ 21,331	$ 23,677	$ 20,795	$ 24,213
State				
Assets:				
Pooled cash and investments	$ 74,790	$ 693,733	$ 696,910	$ 71,613
Taxes receivable	6,511	6,677	6,511	6,677
Total assets	$ 81,301	$ 700,410	$ 703,421	$ 78,290
Liabilities:				
Amount held for others	$ 75,959	$ 695,107	$ 698,079	$ 72,987
Unavailable revenue - taxes	5,342	5,303	5,342	5,303
Total liabilities	$ 81,301	$ 700,410	$ 703,421	$ 78,290
Caliente City				
Assets:				
Pooled cash and investments	$ 92	$ 135,021	$ 125,216	$ 9,897
Interest receivable	2	27	2	27
Taxes receivable	2,597	3,157	2,597	3,157
Total assets	$ 2,691	$ 138,205	$ 127,815	$ 13,081
Liabilities:				
Amount held for others	$ 1,000	$ 135,832	$ 126,124	$ 10,708
Unavailable revenue - taxes	1,691	2,373	1,691	2,373
Total liabilities	$ 2,691	$ 138,205	$ 127,815	$ 13,081
Caliente City Capital Projects				
Assets:				
Pooled cash and investments	$ 28,162	$ 8,048	$ 35,967	$ 243
Liabilities:				
Amount held for others	$ 28,162	$ 8,048	$ 35,967	$ 243
Fish and Game				
Assets:				
Pooled cash and investments	$ 2,054	$ 2,378	$ 3,553	$ 879
Liabilities:				
Amount held for others	$ 2,054	$ 2,378	$ 3,553	$ 879

LINCOLN COUNTY, NEVADA
COMBINING STATEMENT OF CHANGES IN ASSETS
AND LIABILITIES - ALL AGENCY FUNDS (CONTINUED)
Year Ended June 30, 2019

	Balance July 1, 2018	Additions	Deductions	Balance June 30, 2019
Range				
Assets:				
Pooled cash and investments	$ 7,788	$ 46,491	$ 40,480	$ 13,799
Interest receivable	98	100	98	100
Due from other governments	-	28,635	-	28,635
Total assets	$ 7,886	$ 75,226	$ 40,578	$ 42,534
Liabilities:				
Amount held for others	$ 7,886	$ 75,226	$ 40,578	$ 42,534
School General				
Assets:				
Pooled cash and investments	$ 4,120	$ 1,739,877	$ 1,534,925	$ 209,072
Taxes receivable	25,057	25,724	25,057	25,724
Due from other governments	1,638	1	1,638	1
Total assets	$ 30,815	$ 1,765,602	$ 1,561,620	$ 234,797
Liabilities:				
Amount held for others	$ 10,259	$ 1,745,195	$ 1,541,064	$ 214,390
Unavailable revenue - taxes	20,556	20,407	20,556	20,407
Total liabilities	$ 30,815	$ 1,765,602	$ 1,561,620	$ 234,797
School Debt Service				
Assets:				
Pooled cash and investments	$ 63,403	$ 558,688	$ 538,124	$ 83,967
Interest receivable	863	1,126	863	1,126
Taxes receivable	7,454	7,650	7,454	7,650
Due from other governments	14,621	-	14,621	-
Total assets	$ 86,341	$ 567,464	$ 561,062	$ 92,743
Liabilities:				
Amount held for others	$ 80,226	$ 561,394	$ 554,947	$ 86,673
Unavailable revenue - taxes	6,115	6,070	6,115	6,070
Total liabilities	$ 86,341	$ 567,464	$ 561,062	$ 92,743
Lincoln County TV District				
Assets:				
Pooled cash and investments	$ 169	$ 52,822	$ 49,804	$ 3,187
Liabilities:				
Amount held for others	$ 169	$ 52,822	$ 49,804	$ 3,187

LINCOLN COUNTY, NEVADA
COMBINING STATEMENT OF CHANGES IN ASSETS
AND LIABILITIES - ALL AGENCY FUNDS (CONTINUED)
Year Ended June 30, 2019

	Balance July 1, 2018	Additions	Deductions	Balance June 30, 2019
Pahranagat Fire District				
Assets:				
Pooled cash and investments	$ 1,282	$ 116,979	$ 103,622	$ 14,639
Interest receivable	18	39	18	39
Taxes receivable	625	1,012	625	1,012
Due from other governments	9,576	9,565	9,576	9,565
Total assets	$ 11,501	$ 127,595	$ 113,841	$ 25,255
Liabilities:				
Amount held for others	$ 11,085	$ 126,857	$ 113,425	$ 24,517
Unavailable revenue - taxes	416	738	416	738
Total liabilities	$ 11,501	$ 127,595	$ 113,841	$ 25,255
Public Land				
Assets:				
Pooled cash and investments	$ 208	$ -	$ -	$ 208
Liabilities:				
Amount held for others	$ 208	$ -	$ -	$ 208
Hospital				
Assets:				
Pooled cash and investments	$ 1,472	$ 616,077	$ 548,284	$ 69,265
Taxes receivable	8,950	9,188	8,950	9,188
Due from other governments	585	-	585	-
Total assets	$ 11,007	$ 625,265	$ 557,819	$ 78,453
Liabilities:				
Amount held for others	$ 3,665	$ 617,977	$ 550,477	$ 71,165
Unavailable revenue - taxes	7,342	7,288	7,342	7,288
Total liabilities	$ 11,007	$ 625,265	$ 557,819	$ 78,453
Panaca Fire Protection District				
Assets:				
Pooled cash and investments	$ 10,814	$ 51,131	$ 52,833	$ 9,112
Interest receivable	148	194	148	194
Taxes receivable	2,130	1,826	2,130	1,826
Total assets	$ 13,092	$ 53,151	$ 55,111	$ 11,132
Liabilities:				
Amount held for others	$ 11,570	$ 51,736	$ 53,589	$ 9,717
Unavailable revenue - taxes	1,522	1,415	1,522	1,415
Total liabilities	$ 13,092	$ 53,151	$ 55,111	$ 11,132

LINCOLN COUNTY, NEVADA
COMBINING STATEMENT OF CHANGES IN ASSETS
AND LIABILITIES - ALL AGENCY FUNDS (CONTINUED)
Year Ended June 30, 2019

	Balance July 1, 2018	Additions	Deductions	Balance June 30, 2019
Pioche Fire District				
Assets:				
Pooled cash and investments	$ 34,847	$ 57,812	$ 41,691	$ 50,968
Interest receivable	340	466	340	466
Taxes receivable	1,010	592	1,010	592
Due from other governments	5,128	10,282	5,128	10,282
Total assets	$ 41,325	$ 69,152	$ 48,169	$ 62,308
Liabilities:				
Amount held for others	$ 40,356	$ 68,563	$ 47,200	$ 61,719
Unavailable revenue - taxes	969	589	969	589
Total liabilities	$ 41,325	$ 69,152	$ 48,169	$ 62,308
Pioche Fire District Capital Projects				
Assets:				
Pooled cash and investments	$ 1,546	$ -	$ -	$ 1,546
Interest receivable	19	27	19	27
Total assets	$ 1,565	$ 27	$ 19	$ 1,573
Liabilities:				
Amount held for others	$ 1,565	$ 27	$ 19	$ 1,573
Pioche Fire Emergency				
Assets:				
Pooled cash and investments	$ 3,009	$ 2,500	$ -	$ 5,509
Interest receivable	96	65	96	65
Total assets	$ 3,105	$ 2,565	$ 96	$ 5,574
Liabilities:				
Amount held for others	$ 3,105	$ 2,565	$ 96	$ 5,574
Coyote Springs GID				
Assets:				
Pooled cash and investments	$ 102,997	$ 80,575	$ 33,275	$ 150,297
Interest receivable	1,400	1,844	1,400	1,844
Total assets	$ 104,397	$ 82,419	$ 34,675	$ 152,141
Liabilities:				
Amount held for others	$ 104,397	$ 82,419	$ 34,675	$ 152,141
SB 371				
Assets:				
Pooled cash and investments	$ 25	$ 550	$ 500	$ 75
Liabilities:				
Amount held for others	$ 25	$ 550	$ 500	$ 75

LINCOLN COUNTY, NEVADA
COMBINING STATEMENT OF CHANGES IN ASSETS
AND LIABILITIES - ALL AGENCY FUNDS (CONTINUED)
Year Ended June 30, 2019

	Balance July 1, 2018	Additions	Deductions	Balance June 30, 2019
Southeastern Lincoln County Habitat Conservation Plan GID (SLCHCP)				
Assets:				
Pooled cash and investments	$ 158,238	$ 2,567	$ 660	$ 160,145
Interest receivable	2,154	2,721	2,154	2,721
Total assets	$ 160,392	$ 5,288	$ 2,814	$ 162,866
Liabilities:				
Amount held for others	$ 160,392	$ 5,288	$ 2,814	$ 162,866
Lincoln County Fire Protection District				
Assets:				
Pooled cash and investments	$ 154,994	$ 331,249	$ 171,739	$ 314,504
Interest receivable	4,892	3,019	4,892	3,019
Taxes receivable	2,385	3,162	2,385	3,162
Total assets	$ 162,271	$ 337,430	$ 179,016	$ 320,685
Liabilities:				
Amount held for others	$ 160,029	$ 334,979	$ 176,774	$ 318,234
Unavailable revenue - taxes	2,242	2,451	2,242	2,451
Total liabilities	$ 162,271	$ 337,430	$ 179,016	$ 320,685
Lincoln County Fire Protection District Emergency Fund				
Assets:				
Pooled cash and investments	$ 25,012	$ 25,000	$ -	$ 50,012
Interest receivable	827	520	827	520
Total assets	$ 25,839	$ 25,520	$ 827	$ 50,532
Liabilities:				
Amount held for others	$ 25,839	$ 25,520	$ 827	$ 50,532
Total all funds				
Assets:				
Pooled cash and investments	$ 696,316	$ 4,545,124	$ 3,998,341	$ 1,243,099
Interest receivable	10,894	10,199	10,894	10,199
Taxes receivable	56,719	58,988	56,719	58,988
Due from other governments	31,548	48,483	31,548	48,483
Total assets	$ 795,477	$ 4,662,794	$ 4,097,502	$ 1,360,769
Liabilities:				
Amount held for others	$ 749,282	$ 4,616,160	$ 4,051,307	$ 1,314,135
Unavailable revenue - taxes	46,195	46,634	46,195	46,634
Total liabilities	$ 795,477	$ 4,662,794	$ 4,097,502	$ 1,360,769

DANIEL C. McARTHUR, LTD.
Certified Public Accountant

Quail Park III • 501 So. Rancho Dr., Ste. E-30 • Las Vegas, NV 89106 • (702) 385-1899 • FAX (702) 385-9619

INDEPENDENT AUDITOR'S REPORT ON INTERNAL CONTROL OVER FINANCIAL REPORTING AND ON COMPLIANCE AND OTHER MATTERS BASED ON AN AUDIT OF FINANCIAL STATEMENTS PERFORMED IN ACCORDANCE WITH *GOVERNMENT AUDITING STANDARDS*

Honorable Board of County Commissioners
Lincoln County, Nevada
Pioche, Nevada

We have audited, in accordance with the auditing standards generally accepted in the United States of America and the standards applicable to financial audits contained in *Government Auditing Standards*, issued by the Comptroller General of the United States, the financial statements of the governmental activities, the business-type activities, each major fund, and the aggregate remaining fund information of Lincoln County, Nevada (the County), as of and for the year ended June 30, 2019, and the related notes to the financial statements, which collectively comprise the County's basic financial statements, and have issued our report thereon dated November 27, 2019.

Internal Control over Financial Reporting

In planning and performing our audit of the financial statements, we considered the County's internal control over financial reporting (internal control) to determine the audit procedures that are appropriate in the circumstances for the purpose of expressing our opinions on the financial statements, but not for the purpose of expressing an opinion on the effectiveness of the County's internal control. Accordingly, we do not express an opinion on the effectiveness of the County's internal control.

A *deficiency in internal control* exists when the design or operation of a control does not allow management or employees, in the normal course of performing their assigned functions, to prevent, or detect and correct misstatements on a timely basis. A *material weakness* is a deficiency, or a combination of deficiencies, in internal control, such that there is a reasonable possibility that a material misstatement of the entity's financial statements will not be prevented, or detected and corrected on a timely basis. A *significant deficiency* is a deficiency, or a combination of deficiencies, in internal control that is less severe than a material weakness, yet important enough to merit attention by those charged with governance.

Our consideration of internal control was for the limited purpose described in the first paragraph of this section and was not designed to identify all deficiencies in internal control that might be material weaknesses or, significant deficiencies. Given these limitations, during our audit we did not identify any deficiencies in internal control that we consider to be material weaknesses. However, material weaknesses may exist that have not been identified.

Compliance and Other Matters

As part of obtaining reasonable assurance about whether the County's financial statements are free from material misstatement, we performed tests of its compliance with certain provisions of laws, regulations, contracts, and grant agreements, noncompliance with which could have a direct and material effect on the determination of financial statement amounts. However, providing an opinion on compliance with those provisions was not an objective of our audit, and accordingly, we do not express such an opinion. The results of our tests disclosed no instances of noncompliance or other matters that are required to be reported under *Government Auditing Standards.*

Purpose of this Report

The purpose of this report is solely to describe the scope of our testing of internal control and compliance and the results of that testing, and not to provide an opinion on the effectiveness of the entity's internal control or on compliance. This report is an integral part of an audit performed in accordance with *Government Auditing Standards* in considering the entity's internal control and compliance. Accordingly, this communication is not suitable for any other purpose.



Las Vegas, Nevada
November 27, 2019

DANIEL C. McARTHUR, LTD.
Certified Public Accountant

Quail Park III • 501 So. Rancho Dr., Ste. E-30 • Las Vegas, NV 89106 • (702) 385-1899 • FAX (702) 385-9619

AUDITOR'S COMMENTS

Honorable Board of County Commissioners
Lincoln County, Nevada
Pioche, Nevada

In connection with our audit of the financial statements of the governmental activities, the business-type activities, each major fund, and the aggregate remaining fund information of Lincoln County, Nevada (the County) as of and for the year ended June 30, 2019, and the related notes to the financial statements, nothing came to our attention that caused us to believe that the County failed to comply with the specific requirements of Nevada Revised Statutes referenced below insofar as they relate to accounting matters except as noted below. However, our audit was not directed primarily toward obtaining knowledge of such noncompliance. Accordingly, had we performed additional procedures, other matters may have come to our attention regarding the County's noncompliance with the requirements of Nevada Revised Statutes noted below, insofar as they relate to accounting matters.

CURRENT YEAR STATUTE COMPLIANCE

Expenditures in Excess of Appropriations

Per NRS 354.626, the County is required to report expenditures that exceeded budgeted appropriations at the function level for the General Fund, Special Revenue Funds, and Capital Project Funds. Enterprise funds may not exceed budget appropriations at the fund level. For the year ending June 30, 2019, the County had the following expenditures over appropriations that are required to be reported.

Federal in Lieu Tax Fund – Intergovernmental function	$	3,755

The Federal in Lieu Fund intergovernmental function expenditures in excess of appropriations is not a violation. The over expenditure is related to intergovernmental payments to the Nevada Division of Parole and Probation and the Nevada Division of Health. The County is required to make four quarterly payments to the Divisions. A fifth invoice from each Division was received after year to settle up the County's share of costs for the year causing the over expenditure.

Deficit Fund Balance/Net Position

Legal Aid Services	$	193
Detention Center Enterprise Fund	$	2,309,265
Building Department Enterprise Fund	$	89,571

The deficit net position of the Detention Center and Building Department Enterprise funds are due to the individual fund's proportionate share of the net pension liability of the Public Employees' Retirement System of the State of Nevada which is beyond the control of the County. See **Note D-12** of the financial statement. The Legal Aid Services deficit is due to an unanticipated invoice in the of $770 for legal services recorded as accounts payable that was received too late in the budget year to allow the County to take any corrective action to remedy the deficit before year end. The deficit will be corrected with revenues of the following year.

PROGRESS ON PRIOR YEAR STATUTE COMPLIANCE

The County had similar findings in the current year as listed above.

CURRENT YEAR RECOMMENDATIONS

We noted no material weakness and reported no significant deficiencies in internal controls.

PRIOR YEAR RECOMMENDATIONS

We noted no material weakness and reported no significant deficiencies in internal controls in the prior year.

NEVADA REVISED STATUTE 354.6115 - STABILIZATION FUND

The County created a stabilization fund in accordance with Nevada Revised Statute 354.6115, "Fund to stabilize operations of local government and mitigate effects of natural disaster". The fund is reported on pages 236 and 237 of the financial statements as an "internally reported (budgetary basis) fund reported as part of the General Fund for external reporting purposes. Compliance with Nevada Revised Statutes is contained in Note C1 to the financial statements.

NEVADA REVISED STATUTE 354.5989 – BUSINESS LICENSES

Nevada Revised Statutes 354.624.4(a) requires a schedule of all fees imposed by the County which are subject to the provisions of NRS 354.5989 be addressed by the independent auditor. During the year ended June 30, 2019, the County did not raise fees on business licenses subject to the limitation of NRS 354.5989. The County business fee is $40.

NEVADA REVISED STATUTE 354.59815 – CAPITAL PROJECTS FUND

Capital Improvements Fund

The County established the Capital Improvements Fund in accordance with Nevada Revised Statutes 354.59815. Compliance with Nevada Revised Statutes is contained in Note C1 to the financial statements. The County does not plan to accumulate money in the fund. Projects funded during the year were as follows:

Intergovernmental – Payment to City	$ 8,040
Transfer to the Vehicle Capital Projects fund used to purchase vehicles	$ 121,000

Pioche Town Capital Projects Fund

The County established the Pioche Town Capital Projects Fund in accordance with Nevada Revised Statutes 354.59815. Compliance with Nevada Revised Statutes is contained in Note C1 to the financial statements. The County does not plan to accumulate money in the fund. There were no projects funded during the year.

Panaca Town Capital Projects Fund

The County established the Panaca Town Capital Projects Fund in accordance with Nevada Revised Statutes 354.59815. Compliance with Nevada Revised Statutes is contained in Note C1 to the financial statements. The County does not plan to accumulate money in the fund. Projects funded during the year were as follows:

Cemetery improvements	$ 1,378

Alamo Town Capital Projects Fund

The County established the Alamo Town Capital Projects Fund in accordance with Nevada Revised Statutes 354.59815. Compliance with Nevada Revised Statutes is contained in Note C1 to the financial statements. The County does not plan to accumulate money in the fund. There were no projects funded during the year.



Las Vegas, Nevada
November 27, 2019

DANIEL C. McARTHUR, LTD.
Certified Public Accountant

Quail Park III • 501 So. Rancho Dr., Ste. E-30 • Las Vegas, NV 89106 • (702) 385-1899 • FAX (702) 385-9619

INDEPENDENT AUDITOR'S REPORT ON COMPLIANCE FOR EACH MAJOR PROGRAM AND ON INTERNAL CONTROL OVER COMPLIANCE REQUIRED BY THE UNIFORM GUIDANCE

Honorable Board of County Commissioners
Lincoln County, Nevada
Pioche, Nevada

Report on Compliance for Each Major Federal Program

We have audited Lincoln County, Nevada's (the County) compliance with the types of compliance requirements described in the *OMB Compliance Supplement* that could have a direct and material effect on each of the County's major federal programs for the year ended June 30, 2019. The County's major federal programs are identified in the summary of auditor's results section of the accompanying schedule of findings and questioned costs.

Management's Responsibility

Management is responsible for compliance with federal statutes, regulations, and the terms and conditions of its federal awards applicable to its federal programs.

Auditor's Responsibility

Our responsibility is to express an opinion on compliance for each of the County's major federal programs based on our audit of the types of compliance requirements referred to above. We conducted our audit of compliance in accordance with auditing standards generally accepted in the United States of America; the standards applicable to financial audits contained in *Government Auditing Standards*, issued by the Comptroller General of the United States; and the audit requirements of Title 2 U.S. *Code of Federal Regulations* Part 200, *Uniform Administrative Requirements, Cost Principles, and Audit Requirements for Federal Awards* (Uniform Guidance). Those standards and the Uniform Guidance require that we plan and perform the audit to obtain reasonable assurance about whether noncompliance with the types of compliance requirements referred to above that could have a direct and material effect on a major federal program occurred. An audit includes examining, on a test basis, evidence about the County's compliance with those requirements and performing such other procedures as we considered necessary in the circumstances.

We believe that our audit provides a reasonable basis for our opinion on compliance for each major federal program. However, our audit does not provide a legal determination of the County's compliance.

Opinion on Each Major Federal Program

In our opinion, the County complied, in all material respects, with the types of compliance requirements referred to above that could have a direct and material effect on each of its major federal programs for the year ended June 30, 2019.

Report on Internal Control over Compliance

Management of the County is responsible for establishing and maintaining effective internal control over compliance with the types of compliance requirements referred to above. In planning and performing our audit of compliance, we considered the County's internal control over compliance with the types of requirements that could have a direct and material effect on each major federal program to determine the auditing procedures that are appropriate in the circumstances for the purpose of expressing an opinion on compliance for each major federal program and to test and report on internal control over compliance in accordance with the Uniform Guidance, but not for the purpose of expressing an opinion on the effectiveness of internal control over compliance. Accordingly, we do not express an opinion on the effectiveness of the County's internal control over compliance.

A *deficiency in internal control over compliance* exists when the design or operation of a control over compliance does not allow management or employees, in the normal course of performing their assigned functions, to prevent, or detect and correct, noncompliance with a type of compliance requirement of a federal program on a timely basis. A *material weakness in internal control over compliance* is a deficiency, or combination of deficiencies, in internal control over compliance, such that there is a reasonable possibility that material noncompliance with a type of compliance requirement of a federal program will not be prevented, or detected and corrected, on a timely basis. A *significant deficiency in internal control over compliance* is a deficiency, or combination of deficiencies, in internal control over compliance with a type of compliance requirement of a federal program that is less severe than a material weakness in internal control over compliance, yet important enough to merit attention by those charged with governance.

Our consideration of internal control over compliance was for the limited purpose described in the first paragraph of this section and was not designed to identify all deficiencies in internal control over compliance that might be material weaknesses or significant deficiencies. We did not identify any deficiencies in internal control over compliance that we consider to be material weaknesses. However, material weaknesses may exist that have not been identified.

The purpose of this report on internal control over compliance is solely to describe the scope of our testing of internal control over compliance and the results of that testing based on the requirements of the Uniform Guidance. Accordingly, this report is not suitable for any other purpose.

Report on Schedule of Expenditures of Federal Awards Required by the Uniform Guidance

We have audited the financial statements of the County as of and for the year ended June 30, 2019, and have issued our report thereon dated November 27, 2019, which contained an unmodified opinion on those financial statements. Our audit was conducted for the purpose of forming an opinion on the financial statements as a whole. The accompanying schedule of expenditures of federal awards is presented for purposes of additional analysis as required by the Uniform Guidance and is not a required part of the financial statements. Such information is the responsibility of management and was derived from and related directly to the underlying accounting and other records used to prepare the financial statements. The information has been subjected to the auditing procedures applied in the audit of the financial statements and certain additional procedures, including comparing and reconciling such information directly to the underlying accounting and other records used to prepare the financial statements or to the financial statements themselves, and other additional procedures in accordance with auditing standards generally accepted in the United States of America. In our opinion, the schedule of expenditures of federal awards is fairly stated in all material respects in relation to the financial statements as a whole.

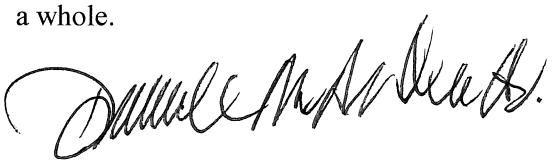

Las Vegas, Nevada
November 27, 2019

LINCOLN COUNTY, NEVADA
SCHEDULE OF EXPENDITURE OF FEDERAL AWARDS
JUNE 30, 2019

Federal Grantor / Pass-through Grantor / Program Title	Federal CFDA Number	Agency or Federal Pass-through Number	Pass Through to Subrecipients	Program Expenditures
U.S. Department of Agriculture				
Passed through State of Nevada Office of the Controller:				
Schools and Roads - Grants to Counties	10.666	N/A	$ -	$ 15,140
Direct Programs:				
Community Facilities Loans and Grants	10.766	N/A	-	9,000
Total U.S. Department of Agriculture			$ -	$ 24,140
U.S. Department of Defense				
Direct Programs:				
Airforce Agreement	12.Unknown	FA8240-15-M-R270	$ -	$ 122,000
U.S. Department of Interior				
Direct Programs:				
Payments in Lieu of Taxes	15.226	N/A	$ -	$ 928,954
Southern Nevada Public Land Management	15.235	L16AC00101	-	525
Wildlife Resource Management	15.247	L17AC00085	-	38,210
Partners for Fish and Widlife	15.631	F16AC01210	-	2,822
National Wildlife Refuge Fund	15.659	N/A	-	3,794
Passed through the State of Nevada, Office of the Controller:				
Taylor Grazing	15.Unknown	N/A	-	31,911
Total U.S. Department of Interior			$ -	$ 1,006,216
U.S. Department of Justice				
Passed through the State of Nevada, Department of Health and Human Services				
Crime Victim Assistance	16.575	16575-17-034	$ -	$ 38,821
Passed through State of Nevada, Department of Public Safety				
Edward Byrne Memorial Justice Assitance Grant Program	16.738	16-JAG-49I	-	1,000
Edward Byrne Memorial Justice Assitance Grant Program	16.738	17-JAG-40	-	19,000
Total CFDA 16.738			-	20,000
Total U.S. Department of Justice			$ -	$ 58,821
U.S. Department of Labor				
Passed through Workforce Connections:				
WIOA Cluster:				
WIOA Adult Program	17.258	N/A	$ -	$ 86,396
WIOA Youth Activities	17.259	N/A	-	157,108
Total WIOA Cluster			-	243,504
Total U.S. Department of Labor			$ -	$ 243,504

See accompanying notes to Schedule of Expenditures of Federal Awards.

Federal Grantor / Pass-through Grantor / Program Title	Federal CFDA Number	Agency or Federal Pass-through Number	Pass Through to Subrecipients	Program Expenditures
U.S. Department of Transportation				
Direct Programs:				
Airport Improvement Program	20.106	3-32-0034-009-2017	$ -	$ 75,198
Airport Improvement Program	20.106	3-32-0034-010-2018	-	203,186
Airport Improvement Program	20.106	3-32-0034-011-2018	-	129,918
Airport Improvement Program	20.106	3-32-0016-012-2017	-	14,578
			-	422,880
Passed through the State of Nevada, Department of Transportation:				
Formula Grants for Rural Areas	20.509	N/A	-	3,870
Formula Grants for Rural Areas	20.509	P-516-17-802	-	12,180
Formula Grants for Rural Areas	20.509	PR-404-18-802	-	31,902
			-	47,952
Passed through the State of Nevada, Department of Public Safety:				
Highway Safety Cluster:				
State and Community Highway Safety	20.600	JF-2019-LICSO-00013	-	3,568
State and Community Highway Safety	20.600	JF-2018-LICSO-00014	-	7,163
			-	10,731
National Priority Safety Programs	20.616	JF-2018-LICSO-00014	-	5,097
Total Highway Safety Cluster			-	15,828
Total U.S. Department of Transportation			$ -	$ 486,660
Institute of Museum and Library Services				
Passed through the Nevada State Library, Archives, and Public Records:				
Grants to States	45.310	45310-18	$ -	$ 2,648
Total Institute of Museum and Library Services			$ -	$ 2,648
U.S. Department of Energy				
Passed through the State of Nevada Department of Public Safety:				
Environmental Remediation and Waste Procesing and Disposal	81.104	8110417	$ -	$ 113
Environmental Remediation and Waste Procesing and Disposal	81.104	8110418E-7018	-	60,170
			-	60,283
Misc. Federal Assistance Actions	81.502	8150216A	-	3,407
Direct Programs:				
Impact Alleviation Program	81.Unknown	N/A	-	1,001
Total U.S. Department of Energy			$ -	$ 64,691

See accompanying notes to Schedule of Expenditures of Federal Awards.

Federal Grantor / Pass-through Grantor / Program Title	Federal CFDA Number	Agency or Federal Pass-through Number	Pass Through to Subrecipients	Program Expenditures
U.S. Department of Health and Human Services				
Passed through the State of Nevada Department of Health and Human Services:				
Aging Cluster:				
Special Programs for the Aging, Title III Part B, Grants for Supportive Services and Senior Centers	93.044	10-000-02-BC-19	$ -	$ 22,519
Special Programs for the Aging, Title III Part C, Nutrition Services	93.045	10-000-04-24-18	-	19,019
Special Programs for the Aging, Title III Part C, Nutrition Services	93.045	10-000-07-13-18	-	7,295
Special Programs for the Aging, Title III Part C, Nutrition Services	93.045	10-000-07-1X-19	-	25,357
Special Programs for the Aging, Title III Part C Nutrition Services	93.045	10-000-04-2H-19	-	11,472
Special Programs for the Aging, Title III Part C Nutrition Services	93.045	10-000-66-2H-18	-	38,551
			-	101,694
Nutrition Services Incentive Program	93.053	10-000-57-NX-19	-	12,255
Nutrition Services Incentive Program	93.053	10-000-57-NX-18	-	12,861
Passed through the State of Nevada, Department of Agriculture Food Distribution Program:				
Nutrition Services Incentive Program	93.053	N/A	-	2,144
			-	27,260
Aging Cluster Total			-	151,473
Passed through the State of Nevada Department of Health and Human Services:				
Community Services Block Grant	93.569	5109	-	52,998
Total U.S. Department of Health and Human Services			$ -	$ 204,471
U.S. Department of Homeland Security				
Passed through the State of Nevada, Department of Public Safety:				
Emergency Management Performance Grants	97.042	9704219	$ -	$ 23,592
Total U.S. Department of Homeland Security			$ -	$ 23,592
Total Federal Financial Assistance			$ -	$ 2,236,743

See accompanying notes to Schedule of Expenditures of Federal Awards.

NOTE 1 - BASIS OF PRESENTATION

The accompanying schedule of expenditures of federal awards (the Schedule) includes the federal grant activity of Lincoln County, Nevada (the county) under programs of the federal government for the year ended June 30, 2018. The information in this Schedule is presented in accordance with the requirements of Title 2 U.S. *Code of Federal Regulations* Part 200, *Uniform Administrative Requirements, Cost Principles, and Audit Requirements for Federal Awards* (Uniform Guidance). Because the Schedule presents only a selected portion of the operations of the County, it is not intended to and does not present the financial position, changes in net position, or cash flows of Lincoln County, Nevada.

NOTE 2 – SUMMARY OF SIGNIFICANT ACCOUNTING POLICIES

(A) Expenditures reported on the Schedule are reported on the modified accrual basis of accounting.
(B) Pass-through entity identifying numbers are presented where available.
(C) Lincoln County, Nevada has elected not to use the 10% De Minimis indirect cost rate allowed under the Uniform Guidelines.

NOTE 3 - FOOD DISTRIBUTION

Non-monetary assistance is reported in the schedule at the fair market value of the commodities received and disbursed. At June 30, 2018 the County had food commodities totaling $0.00 in inventory.

NOTE 4 - U.S. DEPARTMENT OF AGRICULTURE

The County issued a single registered Water Revenue bond purchased by the U.S. Department of Agriculture (CFDA 10.760). The following is a summary of activity for the year:

Balance at July 1, 2018	Additions	Deletions	Balance at June 30, 2019
$ 27,175	$ 0	$ 19,839	$ 7,336

The County issued a single registered Sewer Revenue bond purchased by the U.S. Department of Agriculture (CFDA 10.760). The following is a summary of activity for the year:

Balance at July 1, 2018	Additions	Deletions	Balance at June 30, 2019
$ 183,937	$ 0	$ 3,154	$ 180,783

NOTE 6 – RELATIONSHIP TO BASIC FINANCIAL STATEMENTS

Expenditures of federal awards have been included in the individual funds of the County as follows:

General Fund	$	154,164
Major Special Revenue Fund - Road		15,140
Major Special Revenue Fund - Federal In Lieu Tax		928,954
Major Special Revenue Fund - County Grant		927,816
Nonmajor Special Revenue Funds		178,632
Nonmajor Capital Projects Funds		126
Agency Funds		31,911
	$	2,236,743

SUMMARY OF AUDITOR'S RESULTS

1. The auditor's report expresses an unmodified opinion on whether the financial statements of Lincoln County, Nevada were prepared in accordance with Generally Accepted Accounting Principles.

2. No significant deficiencies relating to the audit of the financial statements are reported in the independent auditor's report on internal control over financial reporting and on compliance and other matters based on an audit of financial statements performed in accordance with *Government Auditing Standards*. No material weaknesses are reported.

3. No instances of noncompliance material to the financial statements of Lincoln County, Nevada, which would be required to be reported in accordance with *Government Auditing Standards*, were disclosed during the audit.

4. No significant deficiencies relating to the audit of the major federal award programs are reported in the independent auditor's report on compliance for each major program and on internal control over compliance required by the Uniform Guidance. No material weaknesses are reported.

5. The auditor's report on compliance for the major federal award programs for Lincoln County, Nevada expresses an unmodified opinion on all major federal programs.

6. There were no audit findings that were required to be reported in accordance with 2 CFR section 200.516(a).

7. The programs tested as major programs were:

   Payments in Lieu of Taxes CFDA No: 15.226

8. The threshold used for distinguishing Types A and B programs was $750,000.

9. Lincoln County, Nevada was determined to be a low-risk auditee.

FINANCIAL STATEMENT FINDINGS

There were no findings for the financial statement.

FINDINGS AND QUESTIONED COSTS-MAJOR FEDERAL AWARDS PROGRAMS

There were no findings for federal awards programs.

FINANCIAL STATEMENT FINDINGS

There were no financial statement findings.

FINDINGS AND QUESTIONED COSTS - MAJOR FEDERAL AWARDS PROGRAMS

There were no findings for federal award programs.

LINCOLN COUNTY, NEVADA

REPORT ON FINANCIAL STATEMENTS AND SUPPLEMENTAL MATERIAL

JUNE 30, 2018

LINCOLN COUNTY, NEVADA
REPORT ON FINANCIAL STATEMENTS
YEAR ENDED JUNE 30, 2018
TABLE OF CONTENTS

	PAGE
INTRODUCTORY SECTION	
Organization	1
FINANCIAL SECTION	
Independent Auditor's Report	2-4
Management's Discussion and Analysis	5-13
BASIC FINANCIAL STATEMENTS:	
GOVERNMENT-WIDE FINANCIAL STATEMENTS:	
Statement of Net Position	14
Statement of Activities	15
FUND FINANCIAL STATEMENTS:	
GOVERNMENTAL FUNDS:	
Balance Sheet	16-17
Reconciliation of the Governmental Funds Balance Sheet to the Statement of Net Position	18
Statement of Revenues, Expenditures, and Changes in Fund Balances	19-20
Reconciliation of the Statement of Revenues, Expenditures, and Changes in Fund Balance of Governmental Funds to the Statement of Activities	21
PROPRIETARY FUNDS:	
Statement of Net Position	22-23
Statement of Revenues, Expenses, and Changes in Net Position	24-25
Statement of Cash Flows	26-27
FIDUCIARY FUND:	
Statement of Fiduciary Net Position	28
Statement of Changes in Fiduciary Net Position	29
Notes to the Basic Financial Statements	30-61
REQUIRED SUPPLEMENTARY INFORMATION:	
Schedule of Revenues, Expenditures, and Changes in Fund Balance - Budget (GAAP Basis) and Actual	
General Fund (Budgetary Basis)	62-67
Road Special Revenue Fund	68
Federal In Lieu Tax Special Revenue Fund	69
Lincoln County Water District Water Resources Special Revenue Fund	70
Lincoln County Land Act Special Revenue Fund	71
County Grant Special Revenue Fund	72
Reconciliation of the General Fund (Budgetary Basis) to the General Fund (GAAP Basis)	73
Schedule of Changes in the County's Total OPEB Liability and Related Ratios	74
Schedule of the County's Contributions to the Public Employees' Retirement System of the State of Nevada	75
Schedule of the County's Porportionate Share of the Net Pension Liability	76
Notes to Required Supplementary Information	77
SUPPLEMENTARY INFORMATION:	
COMBINING AND INDIVIDUAL FUND STATEMENTS AND SCHEDULES:	
NONMAJOR GOVERNMENTAL FUNDS:	
Combining Balance Sheet	78
Combining Statement of Revenues, Expenditures, and Changes in Fund Balance	79
GOVERNMENTAL FUNDS:	
Reconciliation of the General Fund (Budgetary Basis) to the General Fund (GAAP Basis) - Balance Sheet	80

SUPPLEMENTARY INFORMATION (Continued):
COMBINING AND INDIVIDUAL FUND STATEMENTS AND SCHEDULES (Continued):
MAJOR GOVERNMENTAL FUNDS:
General Fund:
Comparative Balance Sheets 81
Schedule of Revenues, Expenditures, and Changes in Fund Balance - Budget (Budgetary Basis) and Actual 82
Schedule of Revenues Compared to Budget (Budgetary Basis) 83
Schedule of Expenditures Compared to Budget (Budgetary Basis) 84-87
Road Special Revenue Fund:
Comparative Balance Sheets 88
Schedule of Revenues, Expenditures, and Changes in Fund Balance - Budget (GAAP Basis) and Actual 89
Federal In Lieu Tax Special Revenue Fund:
Comparative Balance Sheets 90
Schedule of Revenues, Expenditures, and Changes in Fund Balance - Budget (GAAP Basis) and Actual 91-92
Lincoln County Water District Water Resources Special Revenue Fund:
Comparative Balance Sheets 93
Schedule of Revenues, Expenditures, and Changes in Fund Balance - Budget (GAAP Basis) and Actual 94
Lincoln County Land Act Special Use Revenue Fund:
Comparative Balance Sheets 95
Schedule of Revenues, Expenditures, and Changes in Fund Balance - Budget (GAAP Basis) and Actual 96
County Grant Special Revenue Fund:
Comparative Balance Sheets 97
Schedule of Revenues, Expenditures, and Changes in Fund Balance - Budget (GAAP Basis) and Actual 98
MAJOR ENTERPRISE FUND:
Detention Center Enterprise Fund:
Comparative Statement of Net Position 99
Schedule of Revenues, Expenses and Changes in Net Position 100
Comparative Statement of Cash Flows 101
Pioche Public Utility Electric:
Comparative Statement of Net Position 102
Schedule of Revenues, Expenses and Changes in Net Position 103
Comparative Statement of Cash Flows 104
Solid Waste:
Statement of Net Position 105
Schedule of Revenues, Expenses and Changes in Net Position 106
Statement of Cash Flows 107
NONMAJOR SPECIAL REVENUE FUNDS:
Combining Balance Sheet 108-117
Combining Schedule of Revenues, Expenditures, and Changes in Fund Balances 118-127
Pioche Town:
Comparative Balance Sheets 128
Schedule of Revenues, Expenditures, and Changes in Fund Balance - Budget (GAAP Basis) and Actual 129-130
Alamo Town:
Comparative Balance Sheets 131
Schedule of Revenues, Expenditures, and Changes in Fund Balance - Budget (GAAP Basis) and Actual 132-133
Panaca Town:
Comparative Balance Sheets 134
Schedule of Revenues, Expenditures, and Changes in Fund Balance - Budget (GAAP Basis) and Actual 135-136
Resource Development Authority:
Comparative Balance Sheets 137
Schedule of Revenues, Expenditures, and Changes in Fund Balance - Budget (GAAP Basis) and Actual 138
County Library:
Comparative Balance Sheets 139
Schedule of Revenues, Expenditures, and Changes in Fund Balance - Budget (GAAP Basis) and Actual 140

SUPPLEMENTARY INFORMATION (Continued):
COMBINING AND INDIVIDUAL FUND STATEMENTS AND SCHEDULES (Continued):
NONMAJOR SPECIAL REVENUE FUNDS:
Museum:
Comparative Balance Sheets 141
Schedule of Revenues, Expenditures, and Changes in Fund Balance - Budget (GAAP Basis) and Actual 142
Senior Nutrition:
Comparative Balance Sheets 143
Schedule of Revenues, Expenditures, and Changes in Fund Balance - Budget (GAAP Basis) and Actual 144
Transportation:
Comparative Balance Sheets 145
Schedule of Revenues, Expenditures, and Changes in Fund Balance - Budget (GAAP Basis) and Actual 146
Agricultural Extension:
Comparative Balance Sheets 147
Schedule of Revenues, Expenditures, and Changes in Fund Balance - Budget (GAAP Basis) and Actual 148
Indigent:
Comparative Balance Sheets 149
Schedule of Revenues, Expenditures, and Changes in Fund Balance - Budget (GAAP Basis) and Actual 150
Medical Indigent:
Comparative Balance Sheets 151
Schedule of Revenues, Expenditures, and Changes in Fund Balance - Budget (GAAP Basis) and Actual 152
China Springs:
Comparative Balance Sheets 153
Schedule of Revenues, Expenditures, and Changes in Fund Balance - Budget (GAAP Basis) and Actual 154
Ambulance:
Comparative Balance Sheets 155
Schedule of Revenues, Expenditures, and Changes in Fund Balance - Budget (GAAP Basis) and Actual 156
Regional Transportation Commission:
Comparative Balance Sheets 157
Schedule of Revenues, Expenditures, and Changes in Fund Balance - Budget (GAAP Basis) and Actual 158
Room Tax:
Comparative Balance Sheets 159
Schedule of Revenues, Expenditures, and Changes in Fund Balance - Budget (GAAP Basis) and Actual 160
Legal Aid Services:
Comparative Balance Sheets 161
Schedule of Revenues, Expenditures, and Changes in Fund Balance - Budget (GAAP Basis) and Actual 162
Forensic Services:
Comparative Balance Sheets 163
Schedule of Revenues, Expenditures, and Changes in Fund Balance - Budget (GAAP Basis) and Actual 164
Administrative Assessment:
Comparative Balance Sheets 165
Schedule of Revenues, Expenditures, and Changes in Fund Balance - Budget (GAAP Basis) and Actual 166
Forfeiture:
Comparative Balance Sheets 167
Schedule of Revenues, Expenditures, and Changes in Fund Balance - Budget (GAAP Basis) and Actual 168
Recorder Technology:
Comparative Balance Sheets 169
Schedule of Revenues, Expenditures, and Changes in Fund Balance - Budget (GAAP Basis) and Actual 170
L.C. Housing Authority:
Comparative Balance Sheets 171
Schedule of Revenues, Expenditures, and Changes in Fund Balance - Budget (GAAP Basis) and Actual 172
Alamo Clinic:
Comparative Balance Sheets 173
Schedule of Revenues, Expenditures, and Changes in Fund Balance - Budget (GAAP Basis) and Actual 174
Fair Board:
Comparative Balance Sheets 175
Schedule of Revenues, Expenditures, and Changes in Fund Balance - Budget (GAAP Basis) and Actual 176

SUPPLEMENTARY INFORMATION (Continued):
COMBINING AND INDIVIDUAL FUND STATEMENTS AND SCHEDULES (Continued):
NONMAJOR SPECIAL REVENUE FUNDS (Continued):
Multi-species Habitat Conservation :
Comparative Balance Sheets 177
Schedule of Revenues, Expenditures, and Changes in Fund Balance - Budget (GAAP Basis) and Actual 178
Multi-species Habitat Conservation Section 7:
Comparative Balance Sheets 179
Schedule of Revenues, Expenditures, and Changes in Fund Balance - Budget (GAAP Basis) and Actual 180
Youth Activities Counsel:
Comparative Balance Sheet 181
Schedule of Revenues, Expenditures, and Changes in Fund Balance - Budget (GAAP Basis) and Actual 182
Genetic Marker Testing :
Comparative Balance Sheet 183
Schedule of Revenues, Expenditures, and Changes in Fund Balance - Budget (GAAP Basis) and Actual 184
Public Improvement:
Comparative Balance Sheet 185
Schedule of Revenues, Expenditures, and Changes in Fund Balance - Budget (GAAP Basis) and Actual 186
Airport:
Comparative Balance Sheet 187
Schedule of Revenues, Expenditures, and Changes in Fund Balance - Budget (GAAP Basis) and Actual 188
Panaca Town Building:
Comparative Balance Sheet 189
Schedule of Revenues, Expenditures, and Changes in Fund Balance - Budget (GAAP Basis) and Actual 190
Court Facility Fees:
Comparative Balance Sheet 191
Schedule of Revenues, Expenditures, and Changes in Fund Balance - Budget (GAAP Basis) and Actual 192
Tri-County Weed Control:
Comparative Balance Sheet 193
Schedule of Revenues, Expenditures, and Changes in Fund Balance - Budget (GAAP Basis) and Actual 194
Lincoln County Land Act - General:
Comparative Balance Sheet 195
Schedule of Revenues, Expenditures, and Changes in Fund Balance - Budget (GAAP Basis) and Actual 196
Lincoln County Land Act - Planning and Development:
Comparative Balance Sheet 197
Schedule of Revenues, Expenditures, and Changes in Fund Balance - Budget (GAAP Basis) and Actual 198
Lincoln County Land Act - Education:
Comparative Balance Sheet 199
Schedule of Revenues, Expenditures, and Changes in Fund Balance - Budget (GAAP Basis) and Actual 200
Lincoln County Land Act - Grant Match:
Comparative Balance Sheet 201
Schedule of Revenues, Expenditures, and Changes in Fund Balance - Budget (GAAP Basis) and Actual 202
Lincoln County Water - General:
Comparative Balance Sheet 203
Schedule of Revenues, Expenditures, and Changes in Fund Balance - Budget (GAAP Basis) and Actual 204
Lincoln County Water - Special Projects:
Comparative Balance Sheet 205
Schedule of Revenues, Expenditures, and Changes in Fund Balance - Budget (GAAP Basis) and Actual 206
Lincoln County Water - Planning and Development:
Comparative Balance Sheet 207
Schedule of Revenues, Expenditures, and Changes in Fund Balance - Budget (GAAP Basis) and Actual 208
Lincoln County Water - Special Use:
Comparative Balance Sheet 209
Schedule of Revenues, Expenditures, and Changes in Fund Balance - Budget (GAAP Basis) and Actual 210

SUPPLEMENTARY INFORMATION (Continued):
COMBINING AND INDIVIDUAL FUND STATEMENTS AND SCHEDULES (Continued):
NONMAJOR SPECIAL REVENUE FUNDS (Continued):
Lincoln County Water - Grant Match:
Comparative Balance Sheet 211
Schedule of Revenues, Expenditures, and Changes in Fund Balance - Budget (GAAP Basis) and Actual 212
Lincoln County Water District - General :
Comparative Balance Sheets 213
Schedule of Revenues, Expenditures, and Changes in Fund Balance - Budget (GAAP Basis) and Actual 214
Lincoln County Water District - Planning & Development :
Comparative Balance Sheets 215
Schedule of Revenues, Expenditures, and Changes in Fund Balance - Budget (GAAP Basis) and Actual 216
Lincoln County Water District - Special Projects :
Comparative Balance Sheets 217
Schedule of Revenues, Expenditures, and Changes in Fund Balance - Budget (GAAP Basis) and Actual 218
Assessor Technology:
Comparative Balance Sheets 219
Schedule of Revenues, Expenditures, and Changes in Fund Balance - Budget (GAAP Basis) and Actual 220
District Court Technology:
Comparative Balance Sheets 221
Schedule of Revenues, Expenditures, and Changes in Fund Balance - Budget (GAAP Basis) and Actual 222
District Court Specialty Court:
Comparative Balance Sheets 223
Schedule of Revenues, Expenditures, and Changes in Fund Balance - Budget (GAAP Basis) and Actual 224
Court Security Fee:
Comparative Balance Sheets 225
Schedule of Revenues, Expenditures, and Changes in Fund Balance - Budget (GAAP Basis) and Actual 226
District Court Enrichment:
Comparative Balance Sheets 227
Schedule of Revenues, Expenditures, and Changes in Fund Balance - Budget (GAAP Basis) and Actual 228
Nuclear Waste Special Revenue Fund:
Comparative Balance Sheets 229
Schedule of Revenues, Expenditures, and Changes in Fund Balance - Budget (GAAP Basis) and Actual 230
Property Management:
Comparative Balance Sheets 231
Schedule of Revenues, Expenditures, and Changes in Fund Balance - Budget (GAAP Basis) and Actual 232

Internally Reported (Budgetary Basis) Funds Reported as Part of the General Fund for External Reporting Purposes (Continued):
Combining Balance Sheet 233-234
Combining Schedule of Revenues, Expenditures and Changes in Fund Balance 235-236
Stabilization:
Comparative Balance Sheets 237
Schedule of Revenues, Expenditures, and Changes in Fund Balance - Budget (GAAP Basis) and Actual 238
Planning:
Comparative Balance Sheets 239
Schedule of Revenues, Expenditures, and Changes in Fund Balance - Budget (GAAP Basis) and Actual 240
Rachel Jones Memorial Cemetery:
Comparative Balance Sheets 241
Schedule of Revenues, Expenditures, and Changes in Fund Balance - Budget (GAAP Basis) and Actual 242
Flood Control:
Comparative Balance Sheets 243
Schedule of Revenues, Expenditures, and Changes in Fund Balance - Budget (GAAP Basis) and Actual 244
Special Projects:
Comparative Balance Sheets 245
Schedule of Revenues, Expenditures, and Changes in Fund Balance - Budget (GAAP Basis) and Actual 246

SUPPLEMENTARY INFORMATION (Continued):
COMBINING AND INDIVIDUAL FUND STATEMENTS AND SCHEDULES (Continued):
Internally Reported (Budgetary Basis) Funds Reported as Part of the General Fund for External Reporting Purposes (Continued):
Lincoln County Land Act - Emergency Disaster:
Comparative Balance Sheet 247
Schedule of Revenues, Expenditures, and Changes in Fund Balance - Budget (GAAP Basis) and Actual 248
Lincoln County Water - Emergency Disaster:
Comparative Balance Sheet 249
Schedule of Revenues, Expenditures, and Changes in Fund Balance - Budget (GAAP Basis) and Actual 250
NONMAJOR CAPITAL PROJECTS FUNDS:
Combining Balance Sheet 251-253
Combining Statement of Revenues, Expenditures, and Changes in Fund Balances 254-256
Capital Improvements:
Comparative Balance Sheets 257
Schedule of Revenues, Expenditures, and Changes in Fund Balance - Budget (GAAP Basis) and Actual 258
Pioche Town Grant:
Comparative Balance Sheets 259
Schedule of Revenues, Expenditures, and Changes in Fund Balance - Budget (GAAP Basis) and Actual 260
Pioche Town:
Comparative Balance Sheets 261
Schedule of Revenues, Expenditures, and Changes in Fund Balance - Budget (GAAP Basis) and Actual 262
Alamo Town:
Comparative Balance Sheets 263
Schedule of Revenues, Expenditures, and Changes in Fund Balance - Budget (GAAP Basis) and Actual 264
Panaca Town:
Comparative Balance Sheets 265
Schedule of Revenues, Expenditures, and Changes in Fund Balance - Budget (GAAP Basis) and Actual 266
Ambulance:
Comparative Balance Sheets 267
Schedule of Revenues, Expenditures, and Changes in Fund Balance - Budget (GAAP Basis) and Actual 268
Fair Board:
Comparative Balance Sheets 269
Schedule of Revenues, Expenditures, and Changes in Fund Balance - Budget (GAAP Basis) and Actual 270
Vehicle Capital Projects:
Comparative Balance Sheets 271
Schedule of Revenues, Expenditures, and Changes in Fund Balance - Budget (GAAP Basis) and Actual 272
Road Equipment:
Comparative Balance Sheets 273
Schedule of Revenues, Expenditures, and Changes in Fund Balance - Budget (GAAP Basis) and Actual 274
Airport:
Comparative Balance Sheets 275
Schedule of Revenues, Expenditures, and Changes in Fund Balance - Budget (GAAP Basis) and Actual 276
Lincoln County Land Act:
Comparative Balance Sheets 277
Schedule of Revenues, Expenditures, and Changes in Fund Balance - Budget (GAAP Basis) and Actual 278
Lincoln County Water:
Comparative Balance Sheets 279
Schedule of Revenues, Expenditures, and Changes in Fund Balance - Budget (GAAP Basis) and Actual 280
Lincoln County Water District:
Comparative Balance Sheets 281
Schedule of Revenues, Expenditures, and Changes in Fund Balance - Budget (GAAP Basis) and Actual 282
Nonmajor Enterprise Funds:
Combining Statement of Net Position 283-284
Combining Schedule of Revenues, Expenses and Changes in Net Position 285-286
Combining Statement of Cash Flows 287-288

SUPPLEMENTARY INFORMATION (Continued):
COMBINING AND INDIVIDUAL FUND STATEMENTS AND SCHEDULES (Continued):

Pioche Public Utility Water:
Comparative Statement of Net Position 289
Schedule of Revenues, Expenses and Changes in Net Position 290
Comparative Statement of Cash Flows 291
Pioche Public Utility Sewer:
Comparative Statement of Net Position 292
Schedule of Revenues, Expenses and Changes in Net Position 293
Comparative Statement of Cash Flows 294
Building Department:
Comparative Statement of Net Position 295
Schedule of Revenues, Expenses and Changes in Net Position 296
Comparative Statement of Cash Flows 297

AGENCY FUNDS:
Combining Statement of Net Position 298-301
Combining Statement of Changes in Assets and Liabilities 302-306

COMPLIANCE:
Independent Auditor's Report on Internal Control Over Financial Reporting and on Compliance and Other Matters Based on an Audit of Financial Statements Performed in Accordance with *Government Auditing Standards* 307-308

Independent Auditor’s Comments 309-310

LINCOLN COUNTY, NEVADA
ORGANIZATION

COUNTY OFFICERS at June 30, 2018:

Commissioners	Paul Donohue, Chairman
	Varlin Higbee, Vice Chairman
	Nathan Katschke, Member
	Kevin Phillips, Member
	Jared Brackenbury, Member
Clerk	Lisa Lloyd
Treasurer	Shawn Frehner
Auditor/Recorder	Leslie Boucher
Assessor	Mark Holt
Sheriff	Kerry Lee
District Attorney	Daniel Hooge
Justice of the Peace	Mike Cowley
Justice of the Peace	Nola Holton

DANIEL C. McARTHUR, LTD.
Certified Public Accountant

Quail Park III • 501 So. Rancho Dr., Ste. E-30 • Las Vegas, NV 89106 • (702) 385-1899 • FAX (702) 385-9619

INDEPENDENT AUDITOR'S REPORT

Honorable Board of County Commissioners
Lincoln County, Nevada
Pioche, Nevada

Report on the Financial Statements

We have audited the accompanying financial statements of the governmental activities, the business-type activities, each major fund, and the aggregate remaining fund information of Lincoln County, Nevada (the County), as of and for the year ended June 30, 2018, and the related notes to the financial statements, which collectively comprise the County's basic financial statements as listed in the table of contents.

Management's Responsibility for the Financial Statements

Management is responsible for the preparation and fair presentation of these financial statements in accordance with accounting principles generally accepted in the United States of America; this includes the design, implementation, and maintenance of internal control relevant to the preparation and fair presentation of financial statements that are free from material misstatement, whether due to fraud or error.

Auditor's Responsibility

Our responsibility is to express opinions on these financial statements based on our audit. We conducted our audit in accordance with auditing standards generally accepted in the United States of America and the standards applicable to financial audits contained in *Government Auditing Standards*, issued by the Comptroller General of the United States. Those standards require that we plan and perform the audit to obtain reasonable assurance about whether the financial statements are free from material misstatement.

An audit involves performing procedures to obtain audit evidence about the amounts and disclosures in the financial statements. The procedures selected depend on the auditor's judgment, including the assessment of the risks of material misstatement of the financial statements, whether due to fraud or error. In making those risk assessments, the auditor considers internal control relevant to the entity's preparation and fair presentation of the financial statements in order to design audit procedures that are appropriate in the circumstances, but not for the purpose of expressing an opinion on the effectiveness of the entity's internal control. Accordingly, we express no such opinion. An audit also includes evaluating the appropriateness of accounting policies used and the reasonableness of significant accounting estimates made by management, as well as evaluating the overall presentation of the financial statements.

We believe that the audit evidence we have obtained is sufficient and appropriate to provide a basis for our audit opinions.

Opinions

In our opinion, the financial statements referred to above present fairly, in all material respects, the respective financial position of the governmental activities, the business-type activities, each major fund and the aggregate remaining fund information of Lincoln County, Nevada, as of June 30, 2018, and the respective changes in financial position and, where applicable, cash flows thereof, for the year then ended in accordance with accounting principles generally accepted in the United States of America.

Emphasis of Matter – Correction of Errors

As described in Note D-17 to the financial statements, certain errors occurred in the determination or classification of payments to satisfy employee contribution requirements in the adoption, as of July 1, 2016, of Governmental Accounting Standards Board (GASB) Statement No. 82, *Pension Issues – An Amendment of GASB No. 67, No. 68, and No. 73.* Net position as of July 1, 2017, has been restated to reflect the correction of deferred outflows of resources. Our opinions are not modified with respect to this matter.

Emphasis of Matter - Change in Accounting Principle

As described in Note D-16 to the financial statements, in 2018, the County adopted new accounting guidance, Governmental Accounting Standards Board Statement No. 75, *Accounting and Financial Reporting for Postemployment Benefits Other than Pensions.* Our opinions are not modified with respect to this matter.

Other Matters

Required Supplementary Information

Accounting principles generally accepted in the United States of America require that the management's discussion and analysis on pages 5-13, budgetary comparisons information on pages 62-72, Reconciliation of the General Fund (Budgetary Basis) to the General Fund (GAAP Basis) on page 73, Schedule of Changes in the County's Total OPEB Liability and Related Ratios on page 74, Schedule of the County's Contributions to the Public Employees' Retirement System of the State of Nevada on Page 75, and Schedule of the County's Proportionate Share of the Net Pension Liability Public Employees' Retirement System of the State of Nevada on page 76 be presented to supplement the basic financial statements. Such information, although not a part of the basic financial statements, is required by the Governmental Accounting Standards Board, who considers it to be an essential part of financial reporting for placing the basic financial statements in an appropriate operational, economic, or historical context. We have applied certain limited procedures to the required supplementary information in accordance with auditing standards generally accepted in the United States of America, which consisted of inquiries of management about the methods of preparing the information and comparing the information for consistency with management's responses to our inquiries, the basic financial statements, and other knowledge we obtained during our audit of the basic financial statements. We do not express an opinion or provide any assurance on the information because the limited procedures do not provide us with sufficient evidence to express an opinion or provide any assurance.

Other Information

Our audit was conducted for the purpose of forming opinions on the financial statements that collectively comprise the County's basic financial statements. The combining and individual fund financial statements and schedules are presented for purposes of additional analysis and are not a required part of the basic financial statements.

The combining and individual fund financial statements and schedules are the responsibility of management and were derived from and relate directly to the underlying accounting and other records used to prepare the basic financial statements. Such information has been subjected to the auditing procedures applied in the audit of the basic financial statements and certain additional procedures, including comparing and reconciling such information directly to the underlying accounting and other records used to prepare the basic financial statements or to the basic financial statements themselves, and other additional procedures in accordance with auditing standards generally accepted in the United States of America. In our opinion, the combining and individual fund financial statements and schedules are fairly stated in all material respects in relation to the basic financial statements as a whole.

Comparative Prior Year Information

We also have previously audited, in accordance with auditing standards generally accepted in the United States of America, the County's basic financial statements for the year ended June 30, 2017, which are not presented with the accompanying financial statements and we expressed unmodified opinions on the respective financial statements of the governmental activities, the business-type activities, each major fund and the aggregate remaining fund information. That audit was conducted for the purpose of forming opinions on the financial statements that collectively comprise the County's basic financial statements as a whole. The combining and individual fund financial statements and schedules, for the year ended June 30, 2017, are presented for purposes of additional analysis and are not a required part of the basic financial statements. Such information is the responsibility of management and was derived from and relates directly to the underlying accounting and other records used to prepare the 2017 basic financial statements. The information has been subjected to the auditing procedures applied in the audit of those basic financial statements and certain additional procedures, including comparing and reconciling such information directly to the underlying accounting and other records used to prepare the basic financial statements or to the basic financial statements themselves, and other additional procedures in accordance with auditing standards generally accepted in the United States of America. In our opinion, the 2017 combining and individual fund financial statements and schedules are fairly stated in all material respects in relation to the basic financial statements from which they have been derived.

Other Reporting Required by *Government Auditing Standards*

In accordance with *Government Auditing Standards*, we have also issued our report dated November 20, 2018 on our consideration of the County's internal control over financial reporting and on our tests of its compliance with certain provisions of laws, regulations, contracts, and grant agreements and other matters. The purpose of that report is solely to describe the scope of our testing of internal control over financial reporting and compliance and the results of that testing, and not to provide an opinion on the effectiveness in internal control over financial reporting or on compliance. That report is an integral part of an audit performed in accordance with *Government Auditing Standards* in considering the County's internal control over financial reporting and compliance.

Las Vegas, Nevada
November 20, 2018

As management of Lincoln County, Nevada, we offer readers of Lincoln County, Nevada's financial statements this narrative overview and analysis of the financial activities of Lincoln County, Nevada, for the fiscal year end June 30, 2018. The Management's Discussion and Analysis ("MD&A") introduces the financial reports for Lincoln County, Nevada. The MD&A is designed to give the reader an easy-to-understand overview of the County's financial position and results of operations for the year. The MD&A is separated into Financial Highlights, an Overview of the Financial Statements, and a Government-Wide Financial Analysis.

Financial Highlights

The assets of the County exceeded its liabilities at the close of the 2018 fiscal year by $34,546,658 (net position). Total net position represent approximately $26,492,512 in capital assets, net of related debt, $5,659,012 in assets restricted for debt services, capital projects, public works, and for other purposes. The remaining $2,395,134 represents unrestricted net position, which may be used to meet the County's ongoing obligations to its citizens and creditors.

The government-wide net position of the County increased during the fiscal year 2018 by $2,200,152, or 6.80%.

At the end of fiscal year 2018, the County's governmental funds reported combined fund balances of $19,005,151; an increase of $350,906, or 1.88%, when compared to the previous year.

The County's primary revenue sources for governmental activities were ad valorem (property) taxes of $2,987,607, fuel taxes of $1,832,748, federal in lieu taxes of $1,804,715, charges for services of $1,697,650, capital grants and contributions of $1,628,024, consolidated taxes of $1,419,664, and operating grants and contributions of $1,394,184. These revenue sources comprised 22.36%, 13.72%, 13.51%, 12.71%, 12.19%, 10.63%, and 10.44% respectively, or 95.54%, of total governmental activities revenues. Business-type activities revenue from charges for services was $3,602,774.

The County's total government-wide expenses were $14,897,634. The greatest expenses were in the General Government $3,641,595, Public Works $2,201,132, and Public Safety $2,004,934 functions. Business-type activities contributed $3,639,520 to total expenses.

Overview of the Financial Statements

This discussion and analysis is intended to serve as an introduction to the County's basic financial statements which consists of government-wide financial statements, fund financial statements, and accompanying notes. This report also contains required supplementary information in addition to the basic financial statements.

Government-Wide Financial Statements: The government-wide financial statements are designed to provide readers with a broad overview of the County's finances in a manner similar to a private-sector business.

The Statement of Net Position presents information on all of the County's assets and liabilities with the difference reported as net position. Increases or decreases in net position may serve as a useful indicator of whether the financial position of the County is improving or deteriorating.

Overview of the Financial Statements (Continued)

The Statement of Activities presents information showing how the County's net position changed during the most recent fiscal year. All changes in net position are reported as soon as the underlying event giving rise to the change occurs, regardless of the timing of related cash flows. Thus, revenues and expenses are reported in this statement for some items that will only result in cash flows in future fiscal periods (e.g., uncollected taxes and earned but unused vacation and sick leave).

The government-wide financial statements report two types of activities: governmental activities and business-type activities. The government-wide financial statements distinguish functions of the County that are principally supported by taxes and intergovernmental revenues (governmental activities) from other functions that are intended to recover all or a significant portion of their costs through user fees and charges (business-type activities). The governmental activities of the County include general government, public safety, public works, judicial, health, sanitation, welfare, community support, culture and recreation, and intergovernmental. The business-type activities include operations of its detention center, utilities, solid waste, and building department operations.

Fund Financial Statements: A fund is a grouping of related accounts used to maintain control over resources that have been segregated for specific activities or objectives. The County, like other state and local governments, uses fund accounting to ensure and demonstrate compliance with finance-related legal requirements. All of the funds of the County can be divided into three categories: governmental funds, proprietary funds, and fiduciary funds.

Governmental Funds: Governmental funds are used to account for essentially the same functions reported as governmental activities in the government-wide financial statements. However, unlike the government-wide financial statements, governmental fund financial statements focus on near-term inflows and outflows of spendable resources, as well as on balances of spendable resources available at the end of the fiscal year. Such information may be useful in evaluating the County's near-term financial requirements.

Because the focus of governmental funds is narrower than that of the government-wide financial statements, it is useful to compare the information presented for governmental funds with similar information presented for governmental activities in the government-wide financial statements. By doing so, readers may better understand the long-term impact of the County's near-term financing decisions. Both the governmental fund balance sheet and the governmental fund statement of revenues, expenditures, and changes in fund balances provide a reconciliation to facilitate this comparison between governmental funds and governmental activities.

The County maintains individual governmental funds. Information is presented separately in the governmental balance sheet and the governmental fund statement of revenues, expenditures, and changes in fund balances for the General Fund, Road Fund, Federal in Lieu Tax Fund, Lincoln County Water District Water Resources Fund, Lincoln County Land Act Special Use Fund, and County Grant Fund, each of which is considered to be a major fund. Data from the other governmental funds are combined into a single, aggregated presentation. Individual fund data for each of these nonmajor governmental funds is provided in the combining and individual fund statements and schedules.

The County adopts an annual appropriated budget for each of its governmental funds. A budgetary comparison statement is provided for each of the County's governmental funds to demonstrate compliance with the budget. The budgetary comparison statements for the major governmental funds are presented as required supplementary information; the budgetary comparison statements for all other governmental funds are included in the fund financial statements accompanying information.

Overview of the Financial Statements (Continued)

Proprietary Funds: The County maintains one type of proprietary fund, the Enterprise Fund. The Enterprise Fund is used to report the same functions presented as business-type activities in the government-wide financial statements. The County uses the Enterprise Funds to account for its utility activities, building department activities, solid waste operation, and operation of the detention center.

Proprietary funds provide the same type of information as the government-wide financial statements, only in more detail. The proprietary fund financial statements provide separate information for the utility funds, building department, solid waste, and detention center. The Detention Center, Pioche Public Utility Electric, and Solid Waste are considered to be major funds of the County.

Fiduciary Funds: Fiduciary funds are used to account for the resources held for the benefit of parties outside of the government; Fiduciary funds are not reported in the government wide financial statements because the resources of those funds are not available to support the County's own programs. The accounting used for fiduciary funds is much like that used for proprietary funds.

The County has one type of fiduciary fund, the Agency fund. The Agency Fund reports resources held by the County in a custodial capacity for individuals, private organizations, and other governments.

Notes to Financial Statements: The notes to the financial statements provide additional information that is essential to acquire a full understanding of the data provided in the government-wide and fund financial statements.

Other Information: In addition to the basic financial statements and accompanying notes, this report also presents certain required supplementary information concerning the County's progress in funding its obligation to provide other post-employment benefits to its employees; and schedules of budgetary comparisons for both the original and final budgets of the General Fund and the various other major County funds.

The combining statements and individual fund schedules referred to earlier in connection with the nonmajor governmental funds are presented immediately following the required supplementary information.

Government-Wide Financial Analysis

Net position of the County as of June 30, 2018, are summarized and analyzed below:

Net Position

	Governmental Activities		Business-type Activities		Total Primary Government	
	2018	**2017**	**2018**	**2017**	**2018**	**2017**
Assets:						
Current and other assets	$20,627,984	$20,946,142	$1,698,776	$1,278,206	$22,326,760	$22,224,348
Net capital assets	24,090,263	22,956,313	2,718,724	2,649,251	26,808,987	25,605,564
Total assets	44,718,247	43,902,455	4,417,500	3,927,457	49,135,747	47,829,912
Deferred outflows of resources:						
Deferred pension charge	1,195,795	1,888,816	519,015	840,040	1,714,810	2,728,856
Deferred OPEB	46,229	-	5,286	-	51,515	-
Total deferred outflows	1,242,024	1,888,816	524,301	840,040	1,766,325	2,728,856
Liabilities:						
Current liabilities	1,839,893	2,671,569	561,917	425,408	2,401,810	3,096,977
Long-term liabilities	8,350,554	8,281,291	4,377,584	4,498,968	12,728,138	12,780,259
Total liabilities	10,190,447	10,952,860	4,939,501	4,924,376	15,129,948	15,877,236
Deferred inflows of resources:						
Deferred pension charge	848,918	684,171	376,548	305,023	1,225,466	989,194
Net position:						
Invested in capital assets, net of related debt	23,984,900	22,734,316	2,507,612	2,416,245	26,492,512	25,150,561
Restricted	5,626,774	5,727,060	32,238	32,238	5,659,012	5,759,298
Unrestricted	5,309,232	5,692,864	(2,914,098)	(2,910,385)	2,395,134	2,782,479
Total net position	$34,920,906	$34,154,240	$ (374,248)	$ (461,902)	$34,546,658	$33,692,338

As noted earlier, net assets may serve over time as a useful indicator of the County's financial position. Assets exceeded liabilities by $34,546,658 as of June 30, 2018, and by $33,692,338 as of June 30, 2017, resulting in a net increase of $854,320, or 2.54%.

A portion of the County's net assets, 76.69%, reflects its investment in capital assets (e.g., land, buildings, machinery and equipment, etc.), net of any related debt outstanding used to acquire those assets. The County uses these capital assets to provide services to citizens; consequently, these assets are not available for future spending. Although the County's investment in its capital assets is reported net of related debt, it should be noted that the resources needed to repay this debt must be provided from other sources, since the capital assets themselves cannot be used to liquidate the debt.

The County's restricted net assets of 16.38% represents resources that are subject to external restrictions on how they may be used.

The remaining portion of the County's net assets, 6.93%, are unrestricted and may be used to meet the County's ongoing obligations to citizens and creditors.

At June 30, 2018, the County had positive balances in all three categories of net assets.

Changes in net position of the County are summarized as follows:

	Governmental Activities		Business-type Activities		Total	
	2018	2017	2018	2017	2018	2017
Revenues:						
Program revenues:						
Charges for services	$ 1,697,650	$ 1,681,616	$ 3,602,774	$ 2,254,281	$ 5,300,424	$ 3,935,897
Operating grants and contributions	1,394,184	1,581,750	-	-	1,394,184	1,581,750
Capital grants and contributions	1,628,024	205,610	-	-	1,628,024	205,610
General revenues:						
Ad valorem taxes	2,987,607	3,049,596	-	-	2,987,607	3,049,596
Consolidated taxes	1,419,664	1,403,554	-	-	1,419,664	1,403,554
Fuel taxes	1,832,748	1,807,454	-	-	1,832,748	1,807,454
Room taxes	77,201	62,018	-	-	77,201	62,018
Gaming taxes	134,621	140,389	-	-	134,621	140,389
Marijuana fees	88,235	-	-	-	88,235	-
Water sales	-	106,060	-	-	-	106,060
Tax penalties and costs	50,533	77,007	-	-	50,533	77,007
Federal in lieu taxes	1,804,715	874,508	-	-	1,804,715	874,508
Private car line	5,312	-	-	-	5,312	-
Fish and wildlife	3,294	4,046	-	-	3,294	4,046
Rent	154,654	173,857	-	-	154,654	173,857
National forest	21,230	406	-	-	21,230	406
Investment income (loss)	(7,811)	(31,630)	112	225	(7,699)	(31,405)
Other	68,664	64,881	134,375	144,280	203,039	209,161
Total revenues	13,360,525	11,201,122	3,737,261	2,398,786	17,097,786	13,599,908
Expenses:						
General government	3,641,595	3,757,165	-	-	3,641,595	3,757,165
Public safety	2,004,934	2,118,521	-	-	2,004,934	2,118,521
Judicial	1,304,024	1,292,084	-	-	1,304,024	1,292,084
Public works	2,201,132	1,808,478	-	-	2,201,132	1,808,478
Health	287,596	238,843	-	-	287,596	238,843
Welfare	591,351	686,188	-	-	591,351	686,188
Culture and recreation	787,963	730,123	-	-	787,963	730,123
Community support	273,300	360,824	-	-	273,300	360,824
Intergovernmental	103,382	597,610	-	-	103,382	597,610
Other	9,654	13,480	3,639,520	3,755,456	3,649,174	3,768,936
Loss on disposal of assets	53,183	1,084	-	-	53,183	1,084
Total expenses	11,258,114	11,604,400	3,639,520	3,755,456	14,897,634	15,359,856
Change in net position before transfer	2,102,411	(403,278)	97,741	(1,356,670)	2,200,152	(1,759,948)
Transfers	(236,971)	(642,333)	236,971	642,333	-	-
Change in net position	1,865,440	(1,045,611)	334,712	(714,337)	2,200,152	(1,759,948)
Net position - beginning	34,154,240	35,199,851	(461,902)	252,435	33,692,338	35,452,286
Prior period restatement	(1,098,774)	-	(247,058)	-	(1,345,832)	-
Beginning balance as restated	33,055,466	35,199,851	(708,960)	252,435	32,346,506	35,452,286
Net position - ending	$ 34,920,906	$ 34,154,240	$ (374,248)	$ (461,902)	$ 34,546,658	$ 33,692,338

Program revenues include charges for services, fines and forfeitures, certain licenses and permits, and both operating and capital grants and contributions. General revenues consist of taxes, rent, investment income, and miscellaneous.

For general revenues, the largest of these revenues, ad valorem taxes, decreased by $61,989, or 2.03%. The next largest revenue, fuel taxes, increased by $25,294, or 1.40%, due to increased economic activity in the local economy during the fiscal year 2018. The largest business-type activities revenue came from charges for services related to the utilities, detention center, solid waste, and building department. They increased by $1,348,493, or 59.82%, due primarily to an increase in inmate fees and solid waste activities.

Financial Analysis of the County's Governmental Funds

The County uses fund accounting to ensure and demonstrate compliance with finance-related legal requirements.

Governmental Funds

As of the end of the current fiscal year, the County's governmental funds reported a combined ending fund balance of $19,005,151, an increase of $350,906, or 1.88%, from the prior year. Fund balance components have been classified as nonspendable, restricted, committed, assigned and/or unassigned based primarily on the extent to which the County is bound to observe constraints imposed on the use of the resources of each fund. Restricted fund balance is $5,626,774, or 29.61% of total. Spending of these resources is constrained by externally imposed (statutory, bond covenant, or grantors) limitations on their use. The largest restricted fund balances include $862,881 for multi-species conservation, $1,073,968 for capital projects, and $1,381,270 for public works.

Committed and assigned fund balances combined to represent 69.22% of total fund balance with spending constrained by either the Board of County Commissioners (for committed) or senior management (for assigned). Committed balances in the special revenue funds are primarily due to revenues directed by the Commission to those funds to support programs. The largest committed fund balances include $3,379,373 for the Lincoln County Water District and $3,955,642 for land act.

Major Funds

General Fund (Budgetary Basis): The General Fund is the chief operating fund of the County. At the end of the current fiscal year, the fund balance (budgetary basis) of the General Fund was $773,139, an increase of $291,080, or 60.38%. The General Fund revenues increased by $9,856, or 0.22%. Taxes decreased by $52,313, or 2.39%. Charges for services decreased by $9,865, or 2.69%, due to decreased tax penalties and costs. Intergovernmental revenues increased by $51,023, or 3.30%, due to increases in consolidated tax and marijuana fees and a decrease in grant revenues.

Expenditures increased by $281,699, or 6.50%. General government expenditures increased by $65,974, or 4.43% due to an increase in county commissioner and executive officer costs. Public safety expenditures increased by $93,762, or 5.75%, due to an increase in capital outlay and benefits for the sheriff's office. Judicial expenditures increased by $112,359, or 9.60% due to an increase in district court services and supplies.

Road Fund: The fund balance for the fund increased by $232,036 to $636,840, or 57.32%. The Road fund expenditures decreased by $538,841, or 27.72%. This decrease was due to a decrease in capital outlay for equipment and road projects.

Federal in Lieu Tax Fund: The fund balance for the fund increased by $312,233 to $2,083,792, or 17.62%. The Federal in Lieu Tax Fund revenues increased by $985,305, or 112.11%. This increase was due to an increase of grant monies and recognizing unearned revenues. Expenditures increased by $261,854, or 40.29%, due to general government expenditures for IT and other expenses.

Lincoln County Water District Water Resources Fund: The Lincoln County Water District Water Resources Fund balance decreased by $108,297, or 3.81%, from the prior year. This was due to negative income and an operating transfer out.

Lincoln County Land Act Special Use Fund: The Lincoln County Land Act Special Use Fund balance increased by $31,584, or 0.85% from the prior year. This was due to receiving building rental income from tri-county weed and investment income with no expenditures.

County Grant Fund: The County Grant Fund revenues increased by $1,338,830, or 106.36%, and expenditures increased by $1,412,292, or 111.73%. These increases were due to receiving more grant monies in the current year.

Financial Analysis of the County's Enterprise Funds

Enterprise Funds provide the same type of information found in the government-wide financial statements, but in more detail. Unrestricted net position of the enterprise funds was a deficit of $2,914,098. Total net position for these funds increased by $334,712 from the prior year.

The **Detention Center Fund**, a major fund, had operating revenues increase by $940,773, or 100.66%, due to the new contract to provide inmate housing services. Expenses decreased by $70,794, or 3.43% due to a decrease in salaries and benefits.

The **Pioche Public Utility Electricity Fund**, a major fund, had operating revenues increase by $17,918, or 2.65%, during the year. Operating expenses decreased by $42,745, or 5.70%, due to a decrease in salaries and benefits and depreciation expenses.

The **Solid Waste Fund**, a major fund, had operating revenues increase by $409,459, or 114.84%, due to a full year of operations where the prior year was only a partial year. Operating expenses were $21,269, or 3.75%, lower than the prior year due to a decrease in service and supplies.

General Fund Budgetary Highlights

The original budget (2017-18 Final Budget) was approved May 22, 2017.

Original budget compared to final budget: During the year there was no need for any significant amendments to increase either the original estimated revenues or original budgeted appropriations. However, there was a need to make an amendment to reallocate appropriations among departments when it became clearer which departments would actually be charged for certain expenses. Generally, the movement of the appropriations between departments was not significant.

Final budget compared to actual results: The most significant differences for the General Fund were as follows:

Overall the revenues received were more than budgeted by 0.56% or $24,618. Revenues received in excess of budgeted amounts were 10.92% for intergovernmental and 9.49% for licenses and permits. The shortfall in revenue sources were 2.21% for taxes, 4.43% for charges for services, 18.43% for fines and forfeitures, and 5.76% for miscellaneous revenue.

A review of actual expenditures compared to the appropriations in the final budget shows expenditures were $505,453 less than budgeted or 9.87%. Expenditures were under budget for all functions of the General Fund - general government 8.86%, public safety 3.64%, judicial 4.82%, except for health which was 22.86% over budget.

Actual fund balance (budgetary basis) of $773,139, was $174,913 higher than anticipated to begin the 2018-2019 year.

ECONOMIC FACTORS AND NEXT YEAR'S BUDGET AND RATES

The County approved the budget for the 2018-2019 year on May 21, 2018. The following factors were considered in the development of the budget.

- Assessed valuation for the County decreased and tax rates remaining unchanged. Therefore, property tax revenues will be lower.
- Population has remained stable and is projected to increase.

Capital Assets and Debt Administration

Capital Assets

The County's investment in capital assets, net of accumulated depreciation, at June 30, 2018, was $24,090,263 in governmental activities and $2,718,724 in business-type activities. A summary of changes in capital assets for the year ended June 30, 2018, follows:

Governmental Activities:

	Balance June 30, 2017	Additions	Dispositions	Balance June 30, 2018
Capital assets not being depreciated:				
Construction in progress	$ -	$ 1,501,975	$ -	$ 1,501,975
Land	1,809,860	-	-	1,809,860
Total capital assets not being depreciated	1,809,860	1,501,975	-	3,311,835
Capital assets being depreciated:				
Building and improvements	21,769,683	-	-	21,769,683
Infrastructure	2,150,970	-	-	2,150,970
Equipment	9,305,163	974,032	(436,683)	9,842,512
Total capital assets being depreciated	33,225,816	974,032	(436,683)	33,763,165
Less accumulated depreciation for:				
Building and improvements	6,249,332	783,267	-	7,032,599
Infrastructure	287,782	43,019	-	330,801
Equipment	5,542,249	408,844	(329,756)	5,621,337
Total accumulated depreciation	12,079,363	1,235,130	(329,756)	12,984,737
Total capital assets being depreciated, net	21,146,453	(261,098)	(106,927)	20,778,428
Governmental activities assets, net	$ 22,956,313	$ 1,240,877	$ (106,927)	$ 24,090,263

Business-type Activities:

	Balance June 30, 2017	Additions	Dispositions	Balance June 30, 2018
Capital assets not being depreciated:				
Land	$ 214,000	$ -	$ -	$ 214,000
Capital assets being depreciated:				
Building and improvements	1,224,803	132,892	-	1,357,695
Utility system	1,410,352	-	-	1,410,352
Equipment	1,603,203	95,326	-	1,698,529
Total capital assets being depreciated	4,238,358	228,218	-	4,466,576
Less accumulated depreciation for:				
Building and improvements	342,463	40,949	-	383,412
Utility system	616,632	40,245	-	656,877
Equipment	844,012	77,551	-	921,563
Total accumulated depreciation	1,803,107	158,745	-	1,961,852
Total capital assets being depreciated, net	2,435,251	69,473	-	2,504,724
Business-type activities assets, net	$ 2,649,251	$ 69,473	$ -	$ 2,718,724

Capital Assets (Continued)

Major capital asset events during the current fiscal year included the following:

- Construction in progress for Airports and other improvements.
- Equipment for the road, sheriff, tri-county weed, and other culture and recreation equipment.

Debt Administration

Changes in Long-term Debt: During the year ended June 30, 2018, the following changes occurred in long-term debt:

Governmental activities:

	Balance June 30, 2017	Net Additions	Net Deletions	Balance June 30, 2018	Due within One Year
Compensated absences	$ 438,755	$ -	$ 625	$ 438,130	$ 174,315
Net pension liability	8,035,351	-	457,756	7,577,595	-
OPEB obligation payable (restated)	784,154	-	299,167	484,987	-
Note payable	122,497	-	47,699	74,798	50,641
Capital lease payable	98,206	-	68,240	29,966	29,966
Total	$ 9,478,963	$ -	$ 873,487	$ 8,605,476	$ 254,922

Business-type activities:

	Balance June 30, 2017	Net Additions	Net Deletions	Balance June 30, 2018	Due within One Year
Compensated absences	$ 228,818	$ 16,327	$ -	$ 245,145	$ 151,943
Net pension liability	3,807,095	-	203,923	3,603,172	-
OPEB obligation payable (restated)	96,434	-	3,645	92,789	-
Landfill closure and postclosure costs	20,000	20,000	-	40,000	-
Bond payable	233,006	-	21,894	211,112	22,691
Total	$ 4,385,353	$ 36,327	$ 229,462	$ 4,192,218	$ 174,634

The County's debt decreased by $873,487 for governmental activities during the current fiscal year. The reductions were from a decrease in estimated net pension liability, estimated OPEB obligation payable, and the payment of debt.

The County's debt decreased by $193,135 for business-type activities during the current fiscal year. The reason for the decrease was a reduction in estimated net pension liability and bond payments.

Per Nevada Revised Statutes Chapter 244A.059, the debt limitation for the County is equal to 10 percent of the assessed valuation of property, excluding motor vehicles, for the current year. The debt limitation currently applicable at June 30, 2018, was $28,658,088.

Additional information on the County's long-term debt can be found in (**Note D6**).

REQUESTS FOR INFORMATION

This financial report is designed to provide its users with a general overview of Lincoln County, Nevada's finances and to demonstrate the County's accountability for the revenues it receives. Any comments, further questions, or requests for additional information should be addressed to:

County Administration - Lincoln County, Nevada
PO Box 218
Pioche, Nevada 89043

LINCOLN COUNTY, NEVADA
STATEMENT OF NET POSITION
June 30, 2018

	Primary Government		
	Governmental Activities	Business-type Activities	Total
Assets:			
Cash and cash equivalents	$ 18,776,601	$ 1,077,907	$ 19,854,508
Interest receivable	48,982	533	49,515
Taxes receivable	53,337	-	53,337
Due from other governments	1,291,733	-	1,291,733
Due from others	29,331	-	29,331
Prepaid expense	48,000	-	48,000
Accounts receivable	-	548,093	548,093
Interfund receivable	380,000	-	380,000
Restricted assets- Cash	-	72,243	72,243
Capital assets net of accumulated depreciation	24,090,263	2,718,724	26,808,987
Total assets	44,718,247	4,417,500	49,135,747
Deferred outflows of resources:			
Deferred pension charge	1,195,795	519,015	1,714,810
Deferred OPEB	46,229	5,286	51,515
Total deferred outflows of resources	1,242,024	524,301	1,766,325
Liabilities:			
Accounts payable	1,021,619	109,379	1,130,998
Accrued payroll and benefits	341,796	158,663	500,459
Customer deposits	-	8,370	8,370
Due to other funds	(89,535)	89,535	-
Unearned revenue	310,492	-	310,492
Interest payable	599	1,336	1,935
Current portion of liabilities due within one year:			
Accrued compensated absences	174,315	151,943	326,258
Interfund payable	-	20,000	20,000
Notes payable	50,641	-	50,641
Lease payable	29,966	-	29,966
Current portion of liabilities payable from restricted assets:			
Bond payable	-	22,691	22,691
Long-term liabilities due or payable after one year:			
Accrued compensated absences	263,815	93,202	357,017
Landfill closure and postclosure costs	-	40,000	40,000
Interfund payable	-	360,000	360,000
Net pension liability	7,577,595	3,603,172	11,180,767
OPEB liability	484,987	92,789	577,776
Bond payable	-	188,421	188,421
Notes payable	24,157	-	24,157
Total liabilities	10,190,447	4,939,501	15,129,948
Deferred inflows of resources:			
Deferred pension charge	848,918	376,548	1,225,466
Net position:			
Invested in capital assets, net of debt	23,984,900	2,507,612	26,492,512
Restricted	5,626,774	32,238	5,659,012
Unrestricted	5,309,232	(2,914,098)	2,395,134
Total net position	$ 34,920,906	$ (374,248)	$ 34,546,658

The notes to the financial statements are an integral part of this statement.

LINCOLN COUNTY, NEVADA
STATEMENT OF ACTIVITIES
June 30, 2018

Functions/Programs	Expenses	Program Revenues: Charges for Services	Program Revenues: Operating Grants and Contributions	Program Revenues: Capital Grants and Contributions	Changes in Net Position: Governmental Activities	Changes in Net Position: Business-type Activities	Total
Primary governments:							
General government	$ (3,641,595)	$1,245,031	$ 453,545	$ 57,609	$ (1,885,410)	$ -	$ (1,885,410)
Public safety	(2,004,934)	217,925	248,901	122,245	(1,415,863)	-	(1,415,863)
Judicial	(1,304,024)	96,715	-	-	(1,207,309)	-	(1,207,309)
Public works	(2,201,132)	33,678	295,800	898,883	(972,771)	-	(972,771)
Health	(287,596)	80,807	-	-	(206,789)	-	(206,789)
Welfare	(591,351)	-	220,502	20,000	(350,849)	-	(350,849)
Culture and recreation	(787,963)	-	27,320	529,287	(231,356)	-	(231,356)
Community support	(273,300)	23,494	148,116	-	(101,690)	-	(101,690)
Intergovernmental	(103,382)	-	-	-	(103,382)	-	(103,382)
Interest on long-term debt	(9,654)	-	-	-	(9,654)	-	(9,654)
Total governmental activities	(11,204,931)	1,697,650	1,394,184	1,628,024	(6,485,073)	-	(6,485,073)
Business-type activities:							
Building Department	(77,868)	17,849	-	-	-	(60,019)	(60,019)
Detention Center	(1,992,722)	1,875,382	-	-	-	(117,340)	(117,340)
Landfill	(546,638)	766,005	-	-	-	219,367	219,367
Pioche Public Utility	(1,022,292)	943,538	-	-	-	(78,754)	(78,754)
Total business-type activities	(3,639,520)	3,602,774	-	-	-	(36,746)	(36,746)
Total primary governments	$(14,844,451)	$5,300,424	$ 1,394,184	$ 1,628,024	(6,485,073)	(36,746)	(6,521,819)
	General Revenues:						
	Property taxes				2,987,607	-	2,987,607
	Consolidated taxes				1,419,664	-	1,419,664
	Fuel tax				1,832,748	-	1,832,748
	Room tax				77,201	-	77,201
	Gaming tax				134,621	-	134,621
	Marijuana fees				88,235	-	88,235
	Tax penalties and costs				50,533	-	50,533
	Federal in-lieu tax				1,804,715	-	1,804,715
	Private car line				5,312	-	5,312
	Fish and wildlife				3,294	-	3,294
	Rent				154,654	-	154,654
	National forest				21,230	-	21,230
	Loss on disposal of assets				(53,183)	-	(53,183)
	Investment income (loss)				(7,811)	112	(7,699)
	Miscellaneous				68,664	-	68,664
	Capital fees				-	113,758	113,758
	Custom fees				-	20,617	20,617
	Operating transfers				(236,971)	236,971	-
	Total general revenues and transfers				8,350,513	371,458	8,721,971
	Change in net position				1,865,440	334,712	2,200,152
	Net position - beginning as restated				33,055,466	(708,960)	32,346,506
	Net position - end of year				$ 34,920,906	$ (374,248)	$ 34,546,658

The notes to the financial statements are an integral part of this statement

LINCOLN COUNTY, NEVADA
BALANCE SHEET
GOVERNMENTAL FUNDS
June 30, 2018

	Major Funds				
	General Fund	Road Fund	Federal in Lieu Tax Fund	Lincoln County Water District Water Resources	Lincoln County Land Act Special Use
ASSETS					
Pooled cash and investments	$ 1,212,183	$ 493,759	$ 2,182,955	$ 2,724,053	$ 3,562,405
Interest receivable	4,053	821	8,816	9,362	6,319
Taxes receivable	32,550	-	-	-	-
Due from other governments	397,413	296,386	57,609	-	-
Due from others	27,652	-	-	-	-
Prepaid expense	-	-	-	-	-
Interfund receivable	-	-	-	-	190,000
Due from other funds	89,535	-	-	-	-
Total assets	$ 1,763,386	$ 790,966	$ 2,249,380	$ 2,733,415	$ 3,758,724
LIABILITIES					
Accounts payable	$ 214,005	$ 109,070	$ 165,588	$ -	$ -
Accrued payroll and benefits	213,130	45,056	-	-	-
Unearned revenues	-	-	-	-	-
Total liabilities	427,135	154,126	165,588	-	-
DEFERRED INFLOWS OF RESOURCES					
Unavailable revenue - property taxes	26,703	-	-	-	-
FUND BALANCE					
Nonspendable	-	-	-	-	-
Restricted for:					
Capital projects	-	-	-	-	-
Unincorporated towns	-	-	-	-	-
Multi-species conservation	-	-	-	-	-
Stabilization	130,904	-	-	-	-
Rachel Jones Cemetery	827	-	-	-	-
General government	208,567	-	-	-	-
Public safety	-	-	-	-	-
Judicial	-	-	-	-	-
Public works	-	636,840	-	-	-
Health	-	-	-	-	-
Welfare	-	-	-	-	-
Culture and recreation	-	-	-	-	-
Community support	-	-	-	-	-
Intergovernmental	-	-	-	-	-
Committed for:					
Land act	64,723	-	-	-	3,758,724
Water	63,442	-	-	-	-
Lincoln County Water District	-	-	-	2,733,415	-
General government	-	-	2,083,792	-	-
Public works	-	-	-	-	-
Health	-	-	-	-	-
Planning	27,121	-	-	-	-
Flood control	40,825	-	-	-	-
Assigned for:					
Subsequent year	598,226	-	-	-	-
Unassigned:	174,913	-	-	-	-
Total fund balance	1,309,548	636,840	2,083,792	2,733,415	3,758,724
Total liabilities, deferred inflows of resources, and fund balance	$ 1,763,386	$ 790,966	$ 2,249,380	$ 2,733,415	$ 3,758,724

The notes to the financial statements are an integral part of this statement.

County Grant	Other Governmental Funds	Totals
$ 102,369	$ 8,498,877	$ 18,776,601
561	19,050	48,982
-	20,787	53,337
479,664	60,661	1,291,733
-	1,679	29,331
-	48,000	48,000
-	190,000	380,000
-	-	89,535
$ 582,594	$ 8,839,054	$ 20,717,519
$ 338,719	$ 194,237	$ 1,021,619
14,813	68,797	341,796
165,920	144,572	310,492
519,452	407,606	1,673,907
-	11,758	38,461
-	48,000	48,000
-	1,073,968	1,073,968
-	218,847	218,847
-	862,881	862,881
-	-	130,904
-	-	827
-	252,808	461,375
-	66,280	66,280
-	231,092	231,092
-	744,430	1,381,270
-	253	253
-	763,905	763,905
-	208,268	208,268
-	225,800	225,800
-	1,104	1,104
-	132,195	3,955,642
-	2,834,671	2,898,113
-	645,958	3,379,373
63,142	100,046	2,246,980
-	-	-
-	9,453	9,453
-	-	27,121
-	-	40,825
-	-	598,226
-	(269)	174,644
63,142	8,419,690	19,005,151
$ 582,594	$ 8,839,054	$ 20,717,519

LINCOLN COUNTY, NEVADA
RECONCILIATION OF THE GOVERNMENTAL FUNDS BALANCE SHEET
TO THE STATEMENT OF NET POSITION
June 30, 2018

Total fund balance - governmental funds	**$**	**19,005,151**
Amounts reported for governmental activities in the Statement of Net Position are different because:		
Capital assets, net of the related depreciation, are not reported in the Governmental Funds financial statements because they are not current financial resources, but they are reported in the Statement of Net Position.		24,090,263
Other long-term assets which are not available to pay for current period expenditures and, therefore, are deferred in the funds.		38,461
Certain liabilities (such as bonds payable and capital leases payable) are not reported in the Governmental Funds financial statements because they are not due and payable, but they are presented as liabilities in the Statement of Net Position.		(543,493)
The County's other post-employment benefits liabilities as well as other post-employment benefits-related deferred outflows and deferred inflows of resources are recognized in the government-wide statements and include:		
Deferred outflows from other post-employment benefits.		46,229
Total other post-employment benefits liability.		(484,987)
The County's proportionate share of net pension assets and liabilities as well as pension-related deferred outflows and deferred inflows of resources are recognized in the government-wide statements and include:		
Deferred outflows from pension activity		1,195,795
Net pension liability		(7,577,595)
Deferred inflows from pension activity		(848,918)
Total net position - governmental activities	**$**	**34,920,906**

The notes to the financial statements are an integral part of this statement.

LINCOLN COUNTY, NEVADA
STATEMENT OF REVENUES, EXPENDITURES,
AND CHANGES IN FUND BALANCES
GOVERNMENTAL FUNDS
Year Ended June 30, 2018

	Major Funds			
	General Fund	Road Fund	Federal in Lieu Tax Fund	Lincoln County Water District Water Resources
Revenues:				
Taxes	$ 2,132,619	$ -	$ -	$ -
Licenses and permits	19,872	-	-	-
Intergovernmental	1,598,724	1,736,957	1,862,324	-
Charges for services	367,863	-	-	-
Fines and forfeitures	293,668	-	-	-
Miscellaneous	83,434	170	1,826	(8,297)
Total revenues	4,496,180	1,737,127	1,864,150	(8,297)
Expenditures:				
Current:				
General government	1,597,953	-	726,645	-
Public safety	1,723,882	-	45,046	-
Judicial	1,282,536	-	-	-
Public works	82,146	1,405,091	-	-
Health	52,388	-	-	-
Welfare	-	-	-	-
Culture and recreation	-	-	-	-
Community support	-	-	16,957	-
Intergovernmental	-	-	70,484	-
Capital projects	-	-	-	-
Debt service:				
Principal	-	-	47,699	-
Interest	-	-	4,877	-
Total expenditures	4,738,905	1,405,091	911,708	-
Excess (deficiency) of revenues over expenditures	(242,725)	332,036	952,442	(8,297)
Other financing sources (uses):				
Operating transfers in	340,000	-	-	-
Operating transfers out	(66,000)	(100,000)	(640,209)	(100,000)
Sale of capital assets	-	-	-	-
Total other financing sources (uses)	274,000	(100,000)	(640,209)	(100,000)
Net change in fund balance	31,275	232,036	312,233	(108,297)
Fund balance:				
Beginning of year	1,278,273	404,804	1,771,559	2,841,712
End of year	$ 1,309,548	$ 636,840	$ 2,083,792	$ 2,733,415

The notes to the financial statements are an integral part of this statement.

Lincoln County Land Act Special Use	County Grant	**Other Governmental Funds**	Totals
$ -	$ -	$ 928,868	$ 3,061,487
-	-	3,028	22,900
-	2,597,521	553,131	8,348,657
-	-	982,901	1,350,764
-	-	59,254	352,922
31,584	116	111,641	220,474
31,584	2,597,637	2,638,823	13,357,204
-	418,792	1,135,594	3,878,984
-	327,447	16,344	2,112,719
-	-	171,395	1,453,931
-	1,268,488	118,437	2,874,162
-	-	195,366	247,754
-	100,949	507,436	608,385
-	560,607	348,408	909,015
-	-	243,265	260,222
-	-	32,898	103,382
-	-	248,229	248,229
-	-	68,240	115,939
-	-	5,472	10,349
-	2,676,283	3,091,084	12,823,071
31,584	(78,646)	(452,261)	534,133
-	78,762	489,014	907,776
-	-	(238,538)	(1,144,747)
-	-	53,744	53,744
-	78,762	304,220	(183,227)
31,584	116	(148,041)	350,906
3,727,140	63,026	8,567,731	18,654,245
$ 3,758,724	$ 63,142	$ 8,419,690	$ 19,005,151

LINCOLN COUNTY, NEVADA
RECONCILIATION OF THE STATEMENT OF REVENUES, EXPENDITURES AND CHANGES IN FUND BALANCES OF GOVERNMENTAL FUNDS TO THE STATEMENT OF ACTIVITIES
Year Ended June 30, 2018

Net Change in Fund Balance - Governmental Funds	**$**	**350,906**
Amounts reported for governmental activities in the Statement of Activities are different because:		
Capital outlays to purchase or build capital assets are reported in Governmental Funds financial statements as expenditures. However, for governmental activities those costs are shown in the Statement of Net Position and allocated over the estimated useful lives as annual depreciation expenses in the Statement of Activities.		1,133,950
Property taxes that are collected in the time to pay obligations of the current period are reported as revenue in the fund statements. However, amounts that related to prior periods that first become available in the current period should not be reported as revenue in the statement of activities.		3,321
The issuance of long-term debt (e.g., bonds, leases) provides current financial resources to governmental funds, while the repayment of the principal of long-term debt consumes the current financial resources of governmental funds. Neither transaction, however, has any effect on net position. Also, governmental funds report the effect of issuance costs, premiums, discounts, and other similar items when debt is first issued, whereas these amounts are deferred and amortized in the Statement of Activities. This amount is the net effect of these differences in the treatment of long-term debt and related items.		115,939
Generally, expenditures recognized in the fund financial statements are limited to only those that use current financial resources, but expenses are recognized in the statement of activities when incurred.		1,320
Net differences between other post-employment benefits contributions recognized in the fund statement of revenues, expenditures, and changes in fund balances and the Statement of Activities:		
Other post-employment benefits contributions made after measurement date (2018 contributions).		46,229
Net other post-employment benefits expense.		249,809
Net differences between pension system contributions recognized in the fund statement of revenues, expenditures, and changes in fund balances and the statement of activities:		
Pension contributions made after measurment date (2018 contributions).		456,528
Net pension expense.		(492,562)
Change in net position of governmental activities	**$**	**1,865,440**

The notes to the financial statements are an integral part of this statement.

LINCOLN COUNTY, NEVADA
STATEMENT OF NET POSITION
PROPRIETARY FUNDS
June 30, 2018

	Major Fund		
	Detention Center	Pioche Public Utility Electric	Solid Waste
ASSETS			
Current assets:			
Pooled cash and investments	$ -	$ 295,950	$ 446,861
Accounts receivable	318,676	49,744	144,690
Interest receivable	-	165	72
Total current assets	318,676	345,859	591,623
Restricted assets:			
Cash	-	-	40,005
Capital assets:			
Land	-	2,000	200,000
Property, plant and equipment (net of depreciation)	876,813	174,285	405,108
Total capital assets	876,813	176,285	605,108
Total assets	1,195,489	522,144	1,236,736
DEFERRED OUTFLOWS OF RESOURCES			
Deferred pension charge	427,920	21,064	31,966
Deferred OPEB	-	1,762	-
Total deferred outflows of resources	427,920	22,826	31,966
LIABILITIES			
Current liabilities:			
Accounts payable	25,541	43,708	17,397
Accrued payroll and benefits	123,811	5,490	15,410
Due to other funds	89,535		-
Customer deposits	-	6,610	-
Accrued compensated absences	120,471	7,014	11,432
Interfund payable	-	-	20,000
Accrued interest payable	-	-	-
Total current liabilities	359,358	62,822	64,239
Current liabilities payable from restricted assets:			
Revenue bond	-	-	-
Non-current liabilities:			
Accrued compensated absences	72,283	4,347	7,621
Landfill closure and postclosure costs	-	-	40,000
Interfund payable	-	-	360,000
Net pension liability	3,236,339	131,611	472
OPEB liability	-	30,930	-
Revenue bond	-	-	-
Total non-current liabilities	3,308,622	166,888	408,093
Total liabilities	3,667,980	229,710	472,332
DEFERRED INFLOWS OF RESOURCES			
Deferred pension charge	315,194	15,302	18,877
NET POSITION			
Invested in capital assets, net of related debt	876,813	176,285	605,108
Restricted for revenue bond debt service	-	-	-
Unrestricted	(3,236,578)	123,673	172,385
Total net position	$ (2,359,765)	$ 299,958	$ 777,493

The notes to the financial statements are an integral part of this statement.

Nonmajor Enterprise Funds	Total Enterprise Funds
$ 335,096	$ 1,077,907
34,983	548,093
296	533
370,375	1,626,533
32,238	72,243
12,000	214,000
1,048,518	2,504,724
1,060,518	2,718,724
1,463,131	4,417,500
38,065	519,015
3,524	5,286
41,589	524,301
22,733	109,379
13,952	158,663
-	89,535
1,760	8,370
13,026	151,943
-	20,000
1,336	1,336
52,807	539,226
22,691	22,691
8,951	93,202
-	40,000
-	360,000
234,750	3,603,172
61,859	92,789
188,421	188,421
493,981	4,377,584
569,479	4,939,501
27,175	376,548
849,406	2,507,612
32,238	32,238
26,422	(2,914,098)
$ 908,066	$ (374,248)

LINCOLN COUNTY, NEVADA
STATEMENT OF REVENUES, EXPENSES, AND
CHANGES IN NET POSITION
PROPRIETARY FUNDS
For the Year Ended June 30, 2018

	Major Fund		
	Detention Center	Pioche Public Utility Electric	Solid Waste
Operating revenues:			
Charges for services	$ 1,875,382	$ 693,380	$ 766,005
Operating expenses:			
Salaries and wages	1,002,794	65,173	240,459
Employee benefits	600,602	32,421	83,871
Services and supplies	345,908	587,871	120,382
Closure and postclosure landfill costs	-	-	20,000
Bad debt expense	-	-	40,000
Depreciation	43,418	21,848	41,926
Total operating expenses	1,992,722	707,313	546,638
Operating income (loss)	(117,340)	(13,933)	219,367
Non-operating revenues (expenses):			
Investment income	-	34	15
Operating transfers in	21,820	-	175,151
Capital fees	-	57,123	-
Custom fees	-	14,478	-
Interest expense	-	-	-
Total non-operating revenues (expenses)	21,820	71,635	175,166
Changes in net position	(95,520)	57,702	394,533
Net position:			
Beginning of year	(2,129,922)	277,702	391,035
Restatement per GASB 75	(134,323)	(35,446)	(8,075)
Beginning balance as restated	(2,264,245)	242,256	382,960
End of year	$ (2,359,765)	$ 299,958	$ 777,493

The notes to the financial statements are an integral part of this statement.

Nonmajor Enterprise Funds	Total Enterprise Funds
$ 268,007	$ 3,602,774
119,377	1,427,803
70,800	787,694
141,417	1,195,578
-	20,000
-	40,000
51,553	158,745
383,147	3,629,820
(115,140)	(27,046)
63	112
40,000	236,971
56,635	113,758
6,139	20,617
(9,700)	(9,700)
93,137	361,758
(22,003)	334,712
999,283	(461,902)
(69,214)	(247,058)
930,069	(708,960)
$ 908,066	$ (374,248)

LINCOLN COUNTY, NEVADA
STATEMENT OF CASH FLOWS
PROPRIETARY FUNDS
For the Year Ended June 30, 2018

	Major Fund		
	Detention Center	Pioche Public Utility Electric	Solid Waste
Cash flows from operating activities:			
Cash received from customers	$ 1,742,295	$ 706,676	$ 581,599
Cash paid for services and supplies	(369,410)	(594,519)	(117,587)
Cash paid for salaries and benefits	(1,522,554)	(95,966)	(308,808)
Net cash provided (used) by operating activities	(149,669)	16,191	155,204
Cash flows from noncapital financing activities:			
Due to other funds	89,535	-	-
Operating transfers in/out	21,820	-	175,151
Net cash provided (used) by noncapital financing activities	111,355	-	175,151
Cash flows from capital and related financing activities:			
Purchases of capital assets	(21,820)	-	(206,398)
Capital fees	-	57,123	-
Custom fees	-	14,478	-
Debt retirement	-	-	(20,000)
Interest paid	-	-	-
Net cash provided (used) by capital and related financing activities	(21,820)	71,601	(226,398)
Cash flows from investing activities:			
Investment income	-	(24)	(10)
Net change in cash and cash equivalents	(60,134)	87,768	103,947
Cash:			
Beginning of year	60,134	208,182	382,919
End of year	$ -	$ 295,950	$ 486,866
Reconciliation of operating income (loss) to net cash provided (used) by operating activities:			
Operating income (loss)	$ (117,340)	$ (13,933)	$ 219,367
Adjustments to reconcile operating income (loss) to net cash provided (used) by operating activities:			
Depreciation expense	43,418	21,848	41,926
Bad Debts	-	-	40,000
(Increase) decrease in accounts receivable	(133,087)	11,016	(184,406)
Increase (decrease) in accounts payable	(23,502)	(6,648)	2,795
Increase (decrease) in accrued payroll and benefits	54,357	443	1,044
Increase (decrease) in compensated absences	(2,959)	(520)	19,053
Increase (decrease) in land fill costs	-	-	20,000
Increase (decrease) in net pension liability	(173,593)	(6,996)	(10,264)
Increase (decrease) in net pension expense	203,037	8,136	5,689
Increase (decrease) in OPEB liability	-	30,930	-
Increase (decrease) in OPEB pension expense	-	(30,365)	-
Increase (decrease) in customer deposits	-	2,280	-
Total adjustments	(32,329)	30,124	(64,163)
Net cash provided (used) by operating activities	$ (149,669)	$ 16,191	$ 155,204

The notes to the financial statements are an integral part of this statement.

Nonmajor Enterprise Funds	Total Enterprise Funds
$ 267,105	$ 3,297,675
(133,301)	(1,214,817)
(183,708)	(2,111,036)
(49,904)	(28,178)
-	89,535
40,000	236,971
40,000	326,506
-	(228,218)
56,635	113,758
6,139	20,617
(21,894)	(41,894)
(10,022)	(10,022)
30,858	(145,759)
214	180
21,168	152,749
346,166	997,401
$ 367,334	$ 1,150,150
$ (115,140)	$ (27,046)
51,553	158,745
-	40,000
(1,412)	(307,889)
8,116	(19,239)
3,218	59,062
753	16,327
-	20,000
(13,070)	(203,923)
14,439	231,301
61,859	92,789
(60,730)	(91,095)
510	2,790
65,236	(1,132)
$ (49,904)	$ (28,178)

LINCOLN COUNTY, NEVADA
FIDUCIARY FUNDS
STATEMENT OF NET POSITION
June 30, 2018

	Investment Trust Fund	Agency
ASSETS		
Pooled cash and investments	$ 3,691,584	$ 696,316
Interest receivable	-	10,894
Taxes receivable	-	56,719
Due from other governments	-	31,548
Total assets	$ 3,691,584	$ 795,477
LIABILITIES		
Amount held for others	$ -	$ 749,282
Unavailable revenue - taxes	-	46,195
Total liabilities	-	795,477
NET POSITION		
Held in trust for pool participants	$ 3,691,584	$ -

The notes to the financial statements are an integral part of this statement.

LINCOLN COUNTY, NEVADA
FIDUCIARY FUNDS
STATEMENT OF CHANGES IN FIDUCIARY NET POSITION
June 30, 2018

	Investment Trust Fund
Additions:	
Investment earnings	$ 26,291
Net change in fair value of investments	(25,869)
Capital share transactions	-
Change in net position	422
Net position:	
Beginning of year	3,691,162
End of year	$ 3,691,584

The notes to the financial statements are an integral part of this statement.

NOTE A. SUMMARY OF SIGNIFICANT ACCOUNTING POLICIES

The County financial statements are prepared in accordance with generally accepted accounting principles (GAAP). The Governmental Accounting Standards Board (GASB) is responsible for establishing GAAP for state and local governments through its pronouncements (Statements and Interpretations).

1. Reporting Entity

Lincoln County, Nevada, is governed by an elected five member board. As required by generally accepted accounting principles, these financial statements present Lincoln County, Nevada (the primary government), and its component units. Blended component units, although legally separate entities are, in substance, part of the County's operations. Thus, blended component units are appropriately presented as funds' of the primary government.

2. Blended Component Units

Component units are legally separate organizations for which the County is financially accountable. Lincoln County Water District, Alamo Town, Panaca Town, and Pioche Town are all component units that are part of the County's reporting entity because the County is financially accountable for these entities. Financial accountability is determined primarily by the fact that as the governing body, the County's Board of Commissioners can impose its will on significant aspects of the operations of these entities. These entities are presented as blended component units since the operations of these entities are considered part of County operations.

3. Description of Government-Wide Financial Statements

The government-wide financial statements (i.e., the statement of net position and the statement of activities) report information on all of the nonfiduciary activities of the County and its component units. All fiduciary activities are reported only in the fund financial statements. *Governmental activities,* which normally are supported by taxes, intergovernmental revenues, and other nonexchange transactions, are reported separately from *business-type activities*, which rely to a significant extent on fees and charges to external customers for support.

4. Basis of Presentation - Government-wide Financial Statements

While separate government-wide and fund financial statements are presented, they are interrelated. The governmental activities column incorporates data from governmental funds, while business-type activities incorporate data from the County's enterprise funds. Separate financial statements are provided for governmental funds, proprietary funds (enterprise funds), and fiduciary funds, even though the fiduciary funds are excluded from the government-wide financial statements. As a general rule, the effect of interfund activity has been eliminated from the government-wide financial statements.

The Statement of Net Position presents the consolidated financial position of the County at year-end, in separate columns, for both governmental and business-type activities.

The Statement of Activities demonstrates the degree to which the direct expenses of a given function or programs are offset by program revenues. Direct expenses are those that are specifically associated with a program or service and are, therefore, clearly identifiable to a particular function. Amounts reported as program revenues include 1) charges to customers or applicants who purchase, use, or directly benefit from goods, services, or privileges provided by a given function or segment and 2) grants and contributions (including special assessments) that are restricted to meeting the operational or capital requirements of a particular function or segment. Taxes and other revenues properly not included among program revenues are reported instead as general revenues. This statement provides a net cost or net revenue of specific programs and functions within the County. Those functions with a net cost are generally dependent on general-purpose tax revenues, such as property tax, to remain operational.

NOTE A. SUMMARY OF SIGNIFICANT ACCOUNTING POLICIES (Continued)

5. Basis of Presentation - Fund Financial Statements

The fund financial statements provide information about the County's funds, including its fiduciary funds and blended component units. Separate statements for each fund category – governmental, proprietary (enterprise), and fiduciary – are presented. The emphasis of fund financial statements is on major governmental and enterprise funds, each displayed in a separate column. All remaining governmental and enterprise funds are aggregated and reported as nonmajor funds. Major individual governmental and enterprise funds are reported as separate columns in the fund financial statements.

The County reports the following major governmental funds:

General Fund - The General Fund is the County's primary operating fund. It accounts for all financial resources of the general County, except those accounted for in another fund.

Road Fund - The Road Fund is used to account for gas tax revenues allocated for the construction, repair and maintenance of County roads.

Federal in Lieu Tax Fund - The Federal in Lieu Tax Fund is used to account for taxes received in lieu of property taxes for property owned in the County by the Federal Government.

Lincoln County Water District Water Resources Fund - The Lincoln County Water District Water Resources Fund is used to account for general activities of the District, a blended component unit of the government.

Lincoln County Land Act Special Use Fund - The Lincoln County Land Act Special Use Fund is used to account for land sale monies to be spent per ordinances.

County Grant Fund - The County Grant Fund is used to account for monies received to be spent on a specified purpose.

The County reports the following major enterprise fund:

Detention Center Fund - The Detention Center fund is used to account for the activities of the Lincoln County Detention Center, providing detention services for local governments within Nevada.

Pioche Public Utility Electric Fund - The Pioche Public Utility Electric fund is used to account for the charges for providing electric service in Pioche, Nevada.

Solid Waste – The Solid Waste fund is used to account for solid waste disposal throughout the County and land fill operations.

Additionally, the County reports the following fiduciary fund:

Investment Trust – The investment trust fund is an external investment pool operated by the Lincoln County Treasurer. Participants include Caliente City, Lincoln County School District, Range, Panaca Fire Protection District, Pahranagat Fire District, Coyote Springs GID, Pioche Fire District, Southeastern Lincoln County Habitat Conservation Plan GID, and the Lincoln County Fire District.

Agency Funds – The Agency Fund is used to account for assets held by the County in an agency capacity for others and cannot be used to support the government's own programs.

During the course of operations, the County has activity between funds for various purposes. Any residual balances outstanding at year end are reported as due from/to other funds and advances to/from other funds. While these balances are reported in fund financial statements, certain eliminations are made in the preparation of the government-wide financial statements. Balances between the funds included in the governmental activities are eliminated so that only the net amount is included as internal balances in the governmental activities column. Similarly, balances between the funds included in business-type activities (i.e. enterprise funds) are eliminated so that only the net amount is included as internal balances in the business-type activities column.

NOTE A. SUMMARY OF SIGNIFICANT ACCOUNTING POLICIES (Continued)

5. Basis of Presentation - Fund Financial Statements (Continued)

Further, certain activity occurs during the year involving transfers of resources between funds. In fund financial statements these amounts are reported as transfers in/out. While reported in fund financial statements, certain eliminations are made in the preparation of government-wide financial statements. Transfers between the funds included in governmental activities are eliminated so that only the net amount is included as transfers in the governmental activities column. Similarly, balances between the funds included in business-type activities are eliminated so that only the net amount is included as transfers in the business-type activities column.

6. Measurement Focus and Basis of Accounting

The accounting and financial reporting treatment is determined by the applicable measurement focus and basis of accounting. Measurement focus indicates the type of resources being measured such as current financial resources or economic resources. The basis of accounting indicates the timing of events for recognition in the financial statements.

The government-wide financial statements are reported using the economic resources measurement focus and the accrual basis of accounting, as are the proprietary fund and fiduciary fund financial statements. Revenues are recorded when earned and expenses are recorded when a liability is incurred, regardless of the timing of related cash flows. Property taxes are recognized as revenues in the year for which they are levied. Grants and similar items are recognized as revenue as soon as all eligibility requirements imposed by the provider have been met.

The governmental fund financial statements are reported using the current financial resources measurement focus and the modified accrual basis of accounting. Revenues are recognized as soon as they are both measurable and available. Gross receipts and sales taxes are considered "measurable" when in the hands of intermediary collecting governments and are then recognized as revenue. The government considers revenues to be "available" if they are collected within 60 days of the end of the current fiscal period. Anticipated refunds of taxes are recorded as liabilities and reductions of revenue when they are measurable and the payment seems certain. In general, expenditures are recorded when liabilities are incurred. The exception to this rule is that principal and interest on debt service, as well as liabilities related to compensated absences and claims and judgments, are recorded when payment is due. General capital asset acquisitions are reported as expenditures in governmental funds. Issuance of long-term debt and acquisitions under capital leases are reported as other financing sources.

The major revenue sources of the County include consolidated taxes (including sales tax), fuel taxes, intergovernmental revenue, and property taxes. Property taxes, sales taxes, licenses, and interest associated with the current fiscal period are all considered to be susceptible to accrual and so have been recognized as revenues of the current fiscal period. Expenditure-driven grants are recognized as revenue when the qualifying expenditures have been incurred and all other eligibility requirements have been met, and the amount is received during the period or within the availability period for this revenue source (within 60 days of year-end). All other revenue items are considered to be measurable and available only when cash is received by the County.

The proprietary funds are reported using the economic resources measurement focus and the accrual basis of accounting. The agency fund has no measurement focus but utilizes the accrual basis of accounting for reporting its assets and liabilities. Proprietary funds distinguish operating revenues and expenses from non-operating items. Operating revenues and expenses generally result from providing services and producing and delivering goods in connection with a proprietary fund's principal ongoing operations. The principal operating revenues of the Pioche Public Utility funds are customer charges. Operating revenues for the Building fund come from charges for services for building inspections and permits. The Detention Center receives revenue for housing prisoners of other governments. Expenses are those required to provide the service. The Solid Waste fund is used to account for solid waste disposal throughout the County and landfill operations. All revenues and expenses not meeting this definition are reported as non-operating revenues and expenses.

NOTE A. SUMMARY OF SIGNIFICANT ACCOUNTING POLICIES (Continued)

7. Budgetary Basis of Accounting

Annual budgets are adopted on a basis consistent with generally accepted accounting principles for governmental funds.

a. The statutes provide for the following timetable in adoption of budgets:

(i) Before April 15, the County submits to the Nevada State Department of Taxation a tentative budget for the upcoming fiscal year. The tentative budget includes proposed expenditures and the means to finance them.

(ii) A public hearing must be held by the County Commissioners no sooner than the third Monday in May and no later than the last day in May. Notice of the public hearing must be published once in the local newspaper not more than 14 nor less than 7 days before the hearing.

(iii) On or before June 1, the County Commissioners must adopt a final budget.

b. NRS 354.598005 (1) - provides that the County Commissioners may augment the budget at any time by a majority vote of the Commissioners providing the Commission publish notice of its intention to act in a newspaper of general circulation in the County at least three days before the date set for adoption of the resolution.

c. Nevada Revised Statute 354.598005 (5) allows appropriations to be transferred between functions, funds or contingency accounts if such a transfer does not increase the total appropriation for any fiscal year and is not in conflict with other statutory provisions. The County Auditor may transfer appropriations within any function. The County Auditor may also transfer appropriations between functions or programs within a fund, if the County Commissioners are advised of the action at the next regular meeting; and the action is recorded in the official minutes of the meeting. The County Commissioners may authorize the transfer of appropriations between funds or from the contingency account if the County Commissioners announce the transfer of appropriations at a regularly scheduled meeting and sets forth the exact amounts to be transferred and the accounts, functions, programs and funds affected. The County Commissioners must also set forth its reasons for the transfer; and the action must be recorded in the official minutes of the meeting.

d. Statutory regulations require budget control to be exercised at the function level within the funds.

e. The following funds were augmented during the year: Senior Nutrition, County Grants, and Federal in Lieu Tax Funds had automatic budget augmentations for grant revenue. General Fund, China Springs, Nuclear Waste, and Vehicle Capital Projects were augmented during the year.

f. Generally, budgets for all funds are adopted in accordance with generally accepted accounting principles. Budgeted amounts reflected in the accompanying financial statements recognize amendments made during the year.

g. All appropriations lapse at the end of the fiscal year.

8. Assets, Liabilities, Deferred Outflows/Inflows of Resources, and Net Position/Fund Balance

a. Cash and Cash Equivalents

The County's cash and cash equivalents are considered to be cash on hand, demand deposits, and short term investments with original maturities of three months or less from the date of acquisition.

Cash includes cash deposited in interest-bearing accounts at banks and cash in the custody of fiscal agents of the County.

NOTE A. SUMMARY OF SIGNIFICANT ACCOUNTING POLICIES (Continued)

8. Assets, Liabilities, Deferred Outflows/Inflows of Resources, and Net Position/Fund Balance (Continued)

b. Investments

Investments are stated at fair value on the Balance Sheet. Fair value is the amount at which a financial instrument could be exchanged in a current transaction between willing parties other than in a forced or liquidation sale. Changes in the fair value of County investments are part of investment income which is included in revenue from local sources on the Statement of Activities and the Statement of Revenues, Expenditures, and Changes in Fund Balances of governmental funds. (**See Note D1**)

Nevada Revised Statutes authorize the County to invest in:

1. Obligations of the U.S. Treasury and U.S. Agencies in which the maturity dates do not exceed more than 10 years from the date of purchase.

2. Negotiable certificates of deposit issued by commercial banks or insured savings and loan associations (those over $250,000 must be fully collateralized).

3. Negotiable notes or short-term negotiable bonds issued by local governments within Nevada.

4. Eligible bankers' acceptances that do not exceed 270 days maturity and do not exceed 20 percent of the portfolio.

5. Commercial paper with a rating of A-1 or P-1 that does not exceed 240 days maturity and does not exceed 20 percent of the portfolio.

6. The State of Nevada's Local Government Investment Pool.

7. Repurchase agreements that are collateralized at 102 percent of the repurchase price and do not exceed 90 days maturity. Securities used for collateral must meet the criteria listed above.

8. Money market mutual funds which are rated as "AAA" or its equivalent and invest only in securities issued by the Federal Government, U.S. Agencies, or repurchase agreements fully collateralized by such securities.

c. Property Tax

Taxes on real property are levied on July 1st of each year and are due on the third Monday in July. They can be paid in quarterly installments in August, October, January, and March. In the event of nonpayment, the County Treasurer is authorized to hold the property for two years, subject to redemption upon payment of taxes, penalties, and costs, together with interest at a rate of 10 percent per year from the date the taxes were due until paid. If delinquent taxes are not paid within the two year redemption period, the County Treasurer obtains a deed to the property free of all encumbrances. Upon receipt of a deed, the County Treasurer may sell the property to satisfy the tax lien.

Article X, Section 2 of the Constitution of the State of Nevada limits the total taxes levied by all overlapping governmental units within the boundaries of any County (i.e., the County, the County School District, the State and any other City, Town, or Special District) to an amount not to exceed $5 per $100 of assessed valuation of the property being taxed.

The Nevada Legislature enacted provisions whereby the combined overlapping tax rate was limited to $3.64 per $100 of assessed valuation.

NOTE A. SUMMARY OF SIGNIFICANT ACCOUNTING POLICIES (Continued)

8. Assets, Liabilities, Deferred Outflows/Inflows of Resources, and Net Position/Fund Balance (Continued)

d. Inventories and Prepaid Items

Inventories are valued at cost using the first-in/first-out (FIFO) method. The cost of such inventories is recorded as expenditures/expenses when consumed rather than when purchased.

Certain payments to vendors reflect costs applicable to future accounting periods and are recorded as prepaid items in both the government-wide and fund financial statements.

e. Restricted Assets

Certain cash assets of the Enterprise Funds are from revenue for specific use by the Enterprise Funds and are classified as restricted assets because their use is restricted by agreement. **(See Note D5)**

f. Capital Assets

Capital assets, which include property, plant and equipment, and infrastructure assets (e.g. roads, bridges, sidewalks, and similar items), are reported in the applicable governmental or business-type activities columns in the government-wide financial statements. Capital assets are defined by the County as assets with an initial individual cost of more than $500 and an estimated useful life in excess of one year.

If purchased or constructed, capital assets are recorded at historical cost or estimated historical cost and updated for additions and retirements during the year. Donated capital assets are valued at their estimated value as of the date of donation. The costs of normal maintenance and repairs that do not add to the value of the asset or materially extend the life of the asset are not capitalized.

Land and construction in progress are not depreciated. The other property, plant and equipment of the primary government are depreciated using the straight line method over the following estimated useful lives:

Capital Assets	Years
Vehicles	10
Equipment	5-20
Buildings and Improvements	20-50
Infrastructure	25-50

The County is required to report and depreciate new infrastructure assets. Infrastructure assets include roads, bridges, underground pipe (other than related to utilities), traffic signals, etc. Neither their historical cost nor related depreciation has historically been reported in the financial statements. The County is required to capitalize and report its major general infrastructure assets acquired in fiscal years ending after June 30, 1980. In addition, infrastructure assets acquired before June 30, 1980, that received significant reconstruction must be capitalized.

NOTE A. SUMMARY OF SIGNIFICANT ACCOUNTING POLICIES (Continued)

8. Assets, Liabilities, Deferred Outflows/Inflows of Resources, and Net Position/Fund Balance (Continued)

g. Deferred Outflows/Inflows of Resources

In addition to assets, the statement of financial position will sometimes report a separate section for deferred outflows of resources. This separate financial statement element, deferred outflows of resources, represents consumption of net position that applies to a future period(s) and so will not be recognized as an outflow of resources (expense/expenditure) until then. Deferred outflows include the County's pension related contributions subsequent to the measurement date but before the end of the fiscal year and changes in proportion of the District's contributions to the County's proportionate contributions.

In addition to liabilities, the statement of financial position will sometimes report a separate section for deferred inflows of resources. This separate financial statement element, deferred inflows of resources, represents an acquisition of net position that applies to a future period(s) and so will not be recognized as an inflow of resources (revenue) until that time. The County has only one type of item, which arises only under a modified accrual basis of accounting, which qualifies for reporting in this category. Accordingly, the item, unavailable revenue, is reported only in the governmental funds balance sheet. The governmental funds report unavailable revenues from one source, property taxes. This amount is deferred and recognized as an inflow of resources in the period that the amounts become available.

Deferred inflows of resources represent an acquisition of net positon that applies to a future period and will not be recognized as an inflow of resources (revenue) until that time. The difference between projected and actual experience and investment earnings are related to the deferred inflows of pensions and the calculation of net pension liability reported on the statement of net position.

For purposes of measuring the net pension liability, deferred outflows of resources and deferred inflows of resources related to pensions, and pension expense, information about the fiduciary net position of the Public Employees' Retirement System of Nevada (PERS) and additions to/deductions from PERS's fiduciary net position have been determined on the same basis as they are reported by PERS. For this purpose, benefit payments are recognized when due and payable in accordance with the benefit terms. Investments are reported at fair value.

h. Governmental Fund Balances:

In the governmental fund financial statements, fund balances are classified as follows:

(i.) **Nonspendable –** Amounts that cannot be spent either because they are in a nonspendable form or because they are legally or contractually required to be maintained intact, such as inventories and prepaids.

(ii.) **Restricted –** Amounts that can be spent only for a specific purpose because of the state or federal laws, or externally imposed conditions by grantors or creditors.

(iii.) **Committed** –These amounts can only be used for specific purposes as set forth by the County Commissioners. The Commissioners must take formal action (vote approval by the majority), in order to establish an ending fund balance commitment for any specific purpose. Formal Commission action is also required to modify or rescind an established commitment. To be reported as committed, amounts cannot be used for any other purpose unless the Commission takes the same highest level action to remove or change the constraint.

NOTE A. SUMMARY OF SIGNIFICANT ACCOUNTING POLICIES (Continued)

8. Assets, Liabilities, Deferred Outflows/Inflows of Resources, and Net Position/Fund Balance (Continued)

h. Governmental Fund Balances (Continued):

(iv.) Assigned – Assignments are neither restrictions nor commitments and represent the County's intent to use funds for a specific purpose. These assignments, however, are not legally binding and are meant to reflect intended future use of the County's ending fund balance. Intent can be expressed by the County Commissioners or by the County Auditor.

(v.) Unassigned – All amounts not included in other classifications.

i. Fund Balance Flow Assumption

Sometimes the County will fund outlays for a particular purpose from both restricted and unrestricted resources (the total of committed, assigned, and unassigned fund balance.) When fund balance resources are available for a specific purpose in more than one classification, it is the County's policy to use the most restrictive funds first in the following order: restricted, committed, assigned, and unassigned as they are needed.

j. Net Position Policies

In the government-wide statements, net position on the Statement of Net Position includes the following:

(i) Invested in Capital Assets, net of Related Debt

This is the component of net position that reports the difference between capital assets less both the accumulated depreciation and the outstanding balance of debt, excluding unexpended proceeds, that is directly attributable to the acquisition, construction, or improvement of those assets.

(ii) Restricted Assets

This is the component of net position that reports the constraints placed on the use of assets by either external parties and/or enabling legislation. Currently, the County restricts assets as follow:

a) NRS 354.598155 Special Ad Valorem Capital Projects
b) NRS 354.6113 Capital Projects Fund
c) NRS 365.190 Road Improvements
d) NRS 354.6115 Budget Stabilization
e) NRS 269 Unincorporated Towns

(iii) Unrestricted

This is the component of net position that is the difference between the assets and liabilities not reported in Invested in Capital Assets, Net of Related Debt and Restricted Assets.

k. Net Position Flow Assumption

Sometimes the County will fund outlays for a particular purpose from both restricted (e.g., restricted bond or grant proceeds) and unrestricted resources. In order to calculate the amounts to report as restricted – net position and unrestricted – net position in the government-wide and proprietary fund financial statements, a flow assumption must be made about the order in which the resources are considered to be applied. It is the County's policy to consider restricted – net position to have been depleted before unrestricted – net position is applied.

NOTE A. SUMMARY OF SIGNIFICANT ACCOUNTING POLICIES (Continued)

8. Assets, Liabilities, Deferred Outflows/Inflows of Resources, and Net Position/Fund Balance (Continued)

l. Comparative Data/Reclassifications

Comparative total data for the prior year has been presented in selected sections of the accompanying financial statements in order to provide an understanding of the changes in the County's financial position and operations. Also, certain amounts presented in the prior year data have been reclassified in order to be consistent with the current year's presentation.

m. Use of Estimates

The preparation of financial statements in conformity with generally accepted accounting principles requires management to make estimates and assumptions that affect the reported amounts of assets and liabilities and disclosures of contingent assets and liabilities at the date of the financial statements and the reported amounts of revenues and expenses during the period. Actual results could differ from those estimates.

n. Budgetary Stabilization

It is the County's policy to determine the balance or reserve as reasonable and necessary to carry out the purposes of the stabilization fund on a yearly basis. NRS 354.6115 authorizes the creation of a fund to stabilize operations of local governments and mitigate effects of natural disaster. The intent of this policy is to include a portion of the General Fund budgeted ending fund balance that will be restricted to stabilization pursuant to NRS 354.6115. Fund balance that is restricted to stabilization can be used after approval by the board of County Commissioners when total actual revenue falls short of the total anticipated revenue in the General Fund for the fiscal year in which the County uses the money.

9. Revenues and Expenditures/Expenses

a. Compensated Absences

Vested or accumulated vacation and sick leave that is expected to be liquidated with expendable available financial resources is reported as an expenditure and a fund liability of the governmental fund that will pay it. Amounts of vested or accumulated vacation leave that are not expected to be liquidated with expendable available financial resources are reported in the government-wide financial statements. No expenditure is reported for these amounts in the fund financial statements. (**See Note D6**) Vacation leave and sick leave included in accrued liabilities and recorded as expenditures in governmental fund types is the amount normally liquidated from "available spendable resources."

In proprietary funds, compensated absences are recorded when the liabilities are incurred. In governmental funds, the current portion is recorded as payroll expenditure. The estimated long-term liability for compensated absences is accounted for in the government-wide financial statements.

NOTE A. SUMMARY OF SIGNIFICANT ACCOUNTING POLICIES (Continued)

9. Revenues and Expenditures/Expenses (Continued)

b. Long-term Obligations

In the government-wide financial statements and proprietary fund types in the fund financial statements, long-term debt and other long-term obligations are reported as liabilities in the applicable governmental activities, business-type activities, or proprietary fund type Statement of Net Position. Bond premiums and discounts are deferred and amortized over the life of the bonds using the straight-line method. Bonds payable are reported net of the applicable bond premium or discount. Bond issuance costs are expensed when incurred.

In the fund financial statements, governmental fund types recognize bond premiums and discounts, as well as bond issuance costs, during the current period. The face amount of debt issued is reported as other financing sources. Premiums received on debt issuances are reported as other financing sources while discounts on debt issuances are reported as other financing uses. Issuance costs, whether or not withheld from the actual debt proceeds received, are reported as debt service expenditures.

c. Proprietary Funds Operating and Nonoperating Revenues and Expenses

Proprietary funds distinguish operating revenues and expenses from nonoperating items. Operating revenues and expenses generally result from providing services and producing and delivering goods in connection with a proprietary fund's principal ongoing operations. The principal operating revenues of the enterprise funds are charges to customers for sales and services. Operating expenses for enterprise funds include the cost of sales and services, administrative expenses, and depreciation on capital assets. All revenues and expenses not meeting this definition are reported as nonoperating revenues and expenses.

NOTE B. RECONCILIATION OF GOVERNMENT-WIDE AND FUND FINANCIAL STATEMENTS

1. Explanation of certain differences between the governmental funds Balance Sheet and the government-wide Statement of Net Position

The governmental fund balance sheet includes reconciliation between fund balances - total governmental funds and net position - governmental activities as reported in the government-wide statement of net position. One element of the reconciliation explains that "certain liabilities (such as bonds payable and capital leases payable) are not reported in the Governmental funds financial statements because they are not due and payable, but they are presented as liabilities in the statement of net position." The details of this difference are as follows:

Interest payable	$ (599)
Capital lease payable	(29,966)
Notes payable	(74,798)
Compensated absences	(438,130)
Net adjustment to reduce fund balance - total governmental funds to arrive at net position - governmental activities	$ (543,493)

NOTE B. RECONCILIATION OF GOVERNMENT-WIDE AND FUND FINANCIAL STATEMENTS (Continued)

2. Explanation of certain differences between the governmental funds Statement of Revenues, Expenditures, and Changes in Fund Balances and the government-wide Statement of Activities

The governmental fund Statement of Revenues, Expenditures, and Changes in Fund Balances includes a reconciliation between net changes in fund balances - total governmental funds and changes in net position of governmental activities as reported in the government-wide Statement of Activities. One element of that reconciliation explains that "Capital outlays to purchase or build capital assets are reported in Governmental Funds financial statements as expenditures. However, for governmental activities those costs are shown in the statement of net position and allocated over their estimated useful lives as annual depreciation expense in the statement of activities." The details of this difference are as follows:

Capital outlay	$ 2,476,007
Book value of disposed assets	(106,927)
Depreciation expense	(1,235,130)
Net adjustment to increase net changes in fund balances - total governmental funds to arrive at changes in net position of governmental activities	$ 1,133,950

Another element of that reconciliation states that, "The issuance of long-term debt (i.e., bonds, leases) provides current financial resources to governmental funds, while the repayment of the principal of long-term debt consumes the current financial resources of governmental funds. Neither transaction, however, has any effect on Net Position. Also, governmental funds report the effect of issuance costs, premiums, discounts, and other similar items when debt is first issued, whereas these amounts are deferred and amortized in the statement of activities. This amount is the net effect of these differences in the treatment of long-term debt and related items." The details of this difference are as follows:

General obligation debt principal payments	$ 115,939
Net adjustment to increase net change in fund balances – governmental funds to arrive at change in net position of governmental activities	$ 115,939

Another element of that reconciliation states that "Generally, expenditures recognized in the fund financial statements are limited to only those that use current financial resources, but expenses are recognized in the statement of activities when incurred." The details of this difference are as follows:

Accrued interest	$ 696
Compensated absences	625
Net adjustment to increase net change in fund balances – governmental funds to arrive at change in net position of governmental activities	$ 1,320

NOTE C. STEWARDSHIP, COMPLIANCE, AND ACCOUNTABILITY

1. Compliance and Accountability

The County conformed to significant statutory requirements regarding financial administrations except as follows:

Per NRS 354.626, the County is required to report expenditures that exceeded budgeted appropriations at the function level for the General Fund, Special Revenue Funds, and Capital Project Funds. Enterprise funds may not exceed budget appropriations at the fund level. For the year ending June 30, 2018, the County had the following expenditures over appropriations that are required to be reported.

General Fund – Health function	$ 9,748
Room Tax Fund – Culture and recreation function	$ 27,041
Room Tax Fund – Intergovernmental function	$ 585
Legal Aid Services Fund – Judicial function	$ 4,540
Genetic Marker Fund – General government function	$ 338
Detention Center – Enterprise Fund	$ 140,247

The General Fund over expenditure is related to an increase in the monthly payments for State Health Nurse. The Room Tax Fund over expenditure is related to an increase in Room Tax expenditures for local events and an increase in room tax revenues causing additional payments to the State. The Legal Aid Fund over expenditure is related to unanticipated legal services. Genetic Marker Fund over expenditures were due to an increase in required testing. The Detention Center expenditures were in excess of the authorized budget due to additional costs associated with an increase in inmate populations.

2. Deficit Fund Balance/Net Position

Airport Special Revenue Fund	$ 269
Detention Center Enterprise Fund	$ 2,359,765
Building Department Enterprise Fund	$ 77,293

The deficit net position of the Detention Center and Building Department Enterprise funds are due to the individual fund's proportionate share of the net pension liability of the Public Employees' Retirement System of the State of Nevada. See **Note D-12** of the financial statement. The Airport fund deficit is due to a short fall in expected revenues.

NOTE D. DETAILED NOTES ON ALL FUNDS

1. Pooled Cash and Investments

The County maintains a cash and investment pool that is available for use by all funds under the custody of the County Treasurer. At June 30, 2018, this pool is displayed by the statement of net position and major and other governmental funds on the governmental funds balance sheet as "Pooled Cash and Investments."

A reconciliation of cash and investments as shown in the Statement of Net Position is as follows:

Cash in the hands of officers	$ 301,972
Carrying amount of deposits	4,209,604
Fair value of investments	19,803,075
Total	$24,314,651

NOTE D. DETAILED NOTES ON ALL FUNDS (Continued)

1. Pooled Cash and Investments (Continued)

A reconciliation of cash and investments as for the County is as follows:

Government-wide pooled cash and investments	$19,854,508
Restricted cash	72,243
Total primary government	$19,926,751
Investment trust fund	3,691,584
Agency fund cash	696,316
Total reporting entity	$24,314,651

Except for financial reporting purposes, the cash balances of $4,387,900 in the Agency Funds are not normally considered part of the County's pooled cash and investments. These amounts represent cash held in an agency capacity by the County and cannot be used in the County's normal operations.

The cash and investment pool is available for use by all funds of the County. Cash and investments under the custody of the County Treasurer are invested as a pool. The County Treasurer may invest the money of the investment pool in investments which have been authorized as investments by Nevada Revised Statutes. (**See Note A8b**)

Investment income is apportioned to the funds within the pool monthly based on the average balance invested for the month.

State statutes authorize the County to invest in obligations of the U.S. Treasury, commercial paper, corporate bonds, repurchase agreements, and the State Treasurer's Investment Pool.

Cash and investment are subject to the following risks:

Interest Rate Risk: Interest rate risk is the risk of possible reduction in the value of a security, especially a bond, resulting from the rise in interest rates. Nevada Revised Statutes limits bankers' acceptances to 180 days of maturities, repurchase agreements to 90 days, U.S. Treasuries and Agencies to less than 10 years, and commercial paper to 270 days maturity. The approximate weighted average maturity of investments in the Lincoln County Treasurer's investment pool was 1.87 years.

As of June 30, 2018, monies held in the Lincoln County Treasurer's cash and investment pool are categorized as follows:

		Investment Maturities (In Years)		
Investment Type	Fair Value	Less than 1	1-5	6-10
U.S. Government and Agencies:				
U.S. Treasury note	$ 6,904,853	$ 1,324,298	$ 5,580,555	$ 0
U.S. Agency mortgage-backed	8,437,773	4,348,967	4,088,807	0
Money market funds	1,306,393	1,306,393	0	0
Negotiable certificates of deposit	3,154,056	0	3,154,056	0
Total Investments	$19,803,075	$ 6,979,658	$ 12,823,417	$ 0

Governmental Accounting Standards require fair value reporting of all investments. The fair value of the County's investments was determined by market quotes.

NOTE D. DETAILED NOTES ON ALL FUNDS (Continued)

1. Pooled Cash and Investments (Continued)

Credit Risk: Credit risk is the risk that an issuer or other counterparty to an investment will not fulfill its obligation and is a function of the credit quality ratings of its investments. The Nevada Revised Statutes limits investments instruments by their credit risk **(Note A8a)**. The State of Nevada Local Government Investment Pool is an unrated external investment pool.

As of June 30, 2018, monies held in the Lincoln County Treasurer's cash and investment pool are categorized as follows:

		Quality Ratings by Moody's	
Investment Type	Fair Value	Aaa	N/A
U.S. Government and Agencies:			
U.S. Treasury note	$ 6,904,853	$ 6,904,853	$ 0
U.S. Agency mortgage-backed	8,437,773	8,437,773	0
Money market funds	1,306,393	0	1,306,393
Negotiable certificates of deposit	3,154,056	0	3,154,056
Total Investments	$19,803,075	$ 15,342,626	$ 4,460,449

Custodial Credit Risk: Custodial credit risk is the risk that in the event of a bank or brokerage failure, the County's deposits may not be returned. The County's bank deposits are generally covered by FDIC insurance and are collateralized by the Office of the State Treasurer/Nevada Collateral Pool. At year-end, the County's carrying amount of deposits was $4,209,604 and the bank balance was $4,366,727. Of the bank balance, $327,190 was covered by federal depository insurance. Of the remaining balance, $4,039,537 was collateralized with securities held by the Nevada Pooled Collateral Program.

Concentrations of Credit Risk: Concentration of credit risk is defined as the risk of loss attributed to the magnitude of a government's investment in a single issuer. Investments with a single issuer within the Lincoln County Treasurer Cash and investment pool that represent five percent or more of total investments as of June 30, 2018, are as follows:

Federal Farm Credit Bank (FFCB)	10.39%	Federal Home Loan Banks (FHLB)	8.37%
Federal Home Loan Mortgage Corporation (FHLMC)	14.70%	U.S. Treasury Note	37.33%
Federal National Mortgage Association (FNMA)	12.16%		

Fair Value: The County implemented GASB Statement No. 72, Fair Value Measurement and Application, in 2016 to categorize its fair value measurements within the fair value hierarchy established by generally accepted accounting principles. The hierarchy is based on the valuation inputs used to measure the fair value of the asset. Level 1 inputs are quoted prices in active markets for identical assets; Level 2 inputs are significant other observable inputs; Level 3 inputs are significant unobservable inputs.

The County has the following recurring fair value measurements as of June 30, 2018:

Investment Type	Fair Value	Level 1	Level 2	N/A
U.S. Government and Agencies:				
U.S. Treasury note	$ 6,904,853	$ 6,904,853	$ 0	$ 0
U.S. Agency mortgage-backed	8,437,773	0	8,437,773	0
Money market mutual fund	1,306,393	0	0	1,306,393
Negotiable certificates of deposit	3,154,056	0	0	3,154,056
Total Investments	$19,803,075	$ 6,904,853	$ 8,437,773	$ 4,460,449

NOTE D. DETAILED NOTES ON ALL FUNDS (Continued)

1. Pooled Cash and Investments (Continued)

External Investment Pool: The County administers an external investment pool combining the County funds with involuntary investments from Caliente City, Lincoln County School District, Range, Panaca Fire Protection District, Pahranagat Fire District, Coyote Springs GID, Pioche Fire District, Southeastern Lincoln County Habitat Conservation Plan GID, and the Lincoln County Fire District. The Board of County Commissioners has the overall responsibility of investment of funds including the external investment pool in accordance with NRS 355.175. The Lincoln County Treasurer is delegated investment responsibilities. The fair value of investments is determined monthly as statements from the various investment companies are received. Each participant's share is equal to their original investment plus or minus monthly allocations of interest income, and realized and unrealized gains and losses. The County has not provided nor obtained any legally binding guarantees to support the value of the shares.

A summary of investments held in external investment pools at June 30, 2018, is as follows:

Investment Type	Fair Value	Principal Amount	Interest Rate
U.S. Government and Agencies:			
U.S. Treasury notes	$ 4,537,525	$ 4,630,000	Variable
U.S. Agency mortgage-backed	5,960,925	6,023,936	Variable
Money market funds	989,157	989,157	Variable
Negotiable certificates of deposit	3,154,056	3,245,000	Variable
Total Investments	$14,641,663	$ 14,888,093	

External Investment Pool Condensed Financial Statement
Statement of Net Position
June 30, 2018

Assets:	
Investments in securities	
U.S. Treasury notes	$ 4,537,525
U.S. Agency mortgage-backed	5,960,925
Money market funds	989,157
Negotiable certificates of deposit	3,154,056
Total investments held in external investment pools	$ 14,641,663
Net position held in trust for pool participants	
Net position consists of	
Internal participants	$ 10,950,080
External participants	3,691,583
Total net position held in trust for pool participants (Participant's units' outstanding, $1.00/par)	$ 14,641,663

Statement of Changes in Net Position
For the Year Ended June 30, 2018

Additions:	
Investment earnings	$ 104,275
Net change in fair value of investments	(102,604)
Change in net position resulting from operations	(13,901)
Net capital share transactions	0
Change in net position	1,671
Net position, beginning of year	14,639,992
Net position, end of year	$ 14,641,663

NOTE D. DETAILED NOTES ON ALL FUNDS (Continued)

2. Receivables

Below is the detail of receivables for each major fund and the nonmajor funds, in the aggregate, including the applicable allowances for uncollectible accounts:

Receivables as of year-end, net of the applicable allowances for uncollectible accounts, are as follows:

			Due From Other Governments							
Receivables:	Taxes	Interest	Grants	Gaming Taxes	Consolidated Taxes	Fuel Taxes	Other	Due from Others	Accounts Receivable	Total
General	$32,550	$ 4,053	$142,443	$3,306	$ 229,106	$ -	$22,558	$27,652	$ -	$ 461,668
Road	-	821	-	-	-	296,386	-	-	-	297,207
Federal In Lieu	-	8,816	57,609	-	-	-	-	-	-	66,425
Water Resources	-	9,362	-	-	-	-	-	-	-	9,362
Land Act Use	-	6,319	-	-	-	-	-	-	-	6,319
County Grant	-	561	479,664	-	-	-	-	-	-	480,225
Other Governmental Funds	20,787	19,050	19,428	-	20,269	20,964	-	1,679	-	102,177
Enterprise Funds	-	533	-	-	-	-	-	-	548,093	548,626
Total receivables	$53,337	$49,515	$699,144	$3,306	$ 249,375	$317,350	$22,558	$29,331	$ 548,093	$ 1,972,009

3. Capital Assets

Capital assets activity for the year ended June 30, 2018, was as follows:

Governmental Activities:

	Balance June 30, 2017	Additions	Dispositions	Balance June 30, 2018
Capital assets not being depreciated:				
Construction in progress	$ -	$ 1,501,975	$ -	$ 1,501,975
Land	1,809,860	-	-	1,809,860
Total capital assets not being depreciated	1,809,860	1,501,975	-	3,311,835
Capital assets being depreciated:				
Building and improvements	21,769,683	-	-	21,769,683
Infrastructure	2,150,970	-	-	2,150,970
Equipment	9,305,163	974,032	(436,683)	9,842,512
Total capital assets being depreciated	33,225,816	974,032	(436,683)	33,763,165
Less accumulated depreciation for:				
Building and improvements	6,249,332	783,267	-	7,032,599
Infrastructure	287,782	43,019	-	330,801
Equipment	5,542,249	408,844	(329,756)	5,621,337
Total accumulated depreciation	12,079,363	1,235,130	(329,756)	12,984,737
Total capital assets being depreciated, net	21,146,453	(261,098)	(106,927)	20,778,428
Governmental activities assets, net	$ 22,956,313	$ 1,240,877	$ (106,927)	$ 24,090,263

NOTE D. DETAILED NOTES ON ALL FUNDS (Continued)

3. Capital Assets

Business-type Activities:

	Balance June 30, 2017	Additions	Dispositions	Balance June 30, 2018
Capital assets not being depreciated:				
Land	$ 214,000	$ -	$ -	$ 214,000
Capital assets being depreciated:				
Building and improvements	1,224,803	132,892	-	1,357,695
Utility system	1,410,352	-	-	1,410,352
Equipment	1,603,203	95,326	-	1,698,529
Total capital assets being depreciated	4,238,358	228,218	-	4,466,576
Less accumulated depreciation for:				
Building and improvements	342,463	40,949	-	383,412
Utility system	616,632	40,245	-	656,877
Equipment	844,012	77,551	-	921,563
Total accumulated depreciation	1,803,107	158,745	-	1,961,852
Total capital assets being depreciated, net	2,435,251	69,473	-	2,504,724
Business-type activities assets, net	$ 2,649,251	$ 69,473	$ -	$ 2,718,724

Depreciation expense was charged to functions/programs of the primary government as follows:

Governmental activities:	
General government	$ 157,507
Public safety	129,878
Judicial	33,857
Public works	399,818
Health and sanitation	41,692
Welfare	18,969
Community support	19,958
Culture and recreation	433,451
	$ 1,235,130
Business activities:	
Building	$ 881
Water	27,008
Sewer	23,664
Electric	21,848
Solid waste	41,926
Detention center	43,418
	$ 158,745

NOTE D. DETAILED NOTES ON ALL FUNDS (Continued)

4. Accrued Liabilities

Accrued liabilities reported by governmental funds at June 30, 2018, were as follows:

Fund	Accrued Payroll and Benefits	Customer Deposits	Interest Payable
General	$ 213,130	$ -	$ -
Road	45,056	-	-
County Grants	14,813	-	-
Other Governmental Funds	68,797	-	-
Major Enterprise Funds	144,711	6,610	-
Nonmajor Enterprise Funds	13,952	1,760	1,336
Total	$ 500,459	$ 8,370	$ 1,336

5. Restricted Assets

The balances of the County's restricted asset accounts are as follows

Cash – Pioche Public Utility - Water	$ 20,748
Cash – Pioche Public Utility - Sewer	11,490
Cash – Solid Waste	40,005
Total restricted cash	$ 72,243

6. Long-term Debt

Governmental Type Activities:

Note Payable

a. The County borrowed money for the purchase of BLM land. The original principal of the note was $440,000. Payments are due in monthly installments of $4,383 through November, 2019, with interest at 5%.

Year Ending June 30,	Remaining Payments	Interest	Principal
2019	$ 52,589	$ 1,948	$ 50,641
2020	24,428	271	24,157
	$ 77,017	$ 2,219	$ 74,798

Capital Leases

a. The County entered into lease agreements for 4 public safety vehicles at $120,000. The leases have been classified as capital leases according to generally accepted accounting principles. The leases contain non-funding clauses whereby the leases are terminated without penalty should the County fail in a budget year to appropriate money for the payment. The vehicles have a ten-year estimated useful life. This year, $12,000 was included in depreciation expense. These lease agreements qualifies as a capital lease for accounting purposes and, therefore, has been recorded at the present value of future minimum lease payments as of the inception date. The lease was paid in full during the year.

NOTE D. DETAILED NOTES ON ALL FUNDS (Continued)

6. Long-term Debt

Governmental Type Activities: (Continued)

Capital Leases

b. During the year ending June 30, 2017, the County entered into a lease agreement for 3 public safety vehicles totaling $90,000. The leases have been classified as capital leases according to generally accepted accounting principles. The leases contain non-funding clauses whereby the leases are terminated without penalty should the County fail in a budget year to appropriate money for the payment. The vehicles have a ten-year estimated useful life. This year, $9,000 was included in depreciation expense. This lease agreement qualifies as a capital lease for accounting purposes and, therefore, has been recorded at the present value of future minimum lease payments as of the inception date. The future minimum lease obligations and the net present value of these minimum lease payments as of June 30, 2018, were as follows:

Year Ending June 30,	Remaining Payments	Amount Representing Interest	Present Value of Net Minimum Lease Payments
2018	$ 31,764	$ 1,798	$ 29,966

Business-Type Activities:

Revenue Bonds The County issues revenue bonds to provide funds for the acquisition and construction of utility capital assets. Revenue bonds have been issued for the business-type activities. Revenue bonds are an obligation of the enterprise utility funds for which the capital assets were acquired or constructed. Revenue bonds outstanding at June 30, 2018, are as follows:

a. $210,000, 2007 Pioche Town Sewer bond is payable to the U.S. Department of Agriculture-Rural Development. The bond is payable in semi-annual payments of $5,584 including interest. The interest rate is 4.375%. The bond agreement requires the County to establish and fund monthly a debt service reserve fund equal to 10% of the semi-annual payment each month over the life of the loan until they accumulate one annual installment. This reserve fund can be used for emergency maintenance and repairs, and debt repayment should the need arise. The required reserve as of June 30, 2018, is $11,490. The balance in the reserve account was $11,490 as of June 30, 2018 **(See Note D-5)**. The outstanding balance of bonds payable at June 30, 2018, was $183,937.

Annual debt service requirements to maturity for the revenue bond are as follows:

Year Ending June 30,	Principal	Interest
2019	$ 3,154	$ 8,014
2020	3,294	7,874
2021	3,440	7,728
2022	3,592	7,576
2023	3,751	7,417
2024-2028	21,403	34,437
2029-2033	26,560	29,280
2034-2038	32,981	22,859
2039-2043	40,945	14,895
2044-2048	44,817	5,009
	$ 183,937	$ 145,089

NOTE D. DETAILED NOTES ON ALL FUNDS (Continued)

6. Long-term Debt (Continued)

b. $350,000, 1980 Pioche Town Water bond due in monthly installments of $1,729, including interest at 5%, through 2020. The Water bond is payable to the Farmers Home Administration. The bond agreement requires the County to establish and maintain reserves sufficient to insure that loan installments will be paid on time and to pay for emergency maintenance of the facilities. The required reserve as of June 30, 2018, is $20,748. The balance in the reserve account was $20,748 as of June 30, 2018. The outstanding balance of bonds at June 30, 2018, was $27,175.

Annual debt service requirements to maturity for the Revenue Bonds are as follows:

Year Ending June 30,	Principal	Interest
2019	$ 19,537	$ 1,211
2020	7,638	200
	$ 27,175	$ 1,411

Changes in Long-term Debt: During the year ended June 30, 2018, the following changes occurred in long-term debt:

Governmental activities:

	Balance June 30, 2017	Net Additions	Net Deletions	Balance June 30, 2018	Due within One Year
Compensated absences	$ 438,755	$ -	$ 625	$ 438,130	$ 174,315
Net pension liability	8,035,351	-	457,756	7,577,595	-
OPEB obligation payable (restated)	784,154	-	299,167	484,987	-
Note payable	122,497	-	47,699	74,798	50,641
Capital lease payable	98,206	-	68,240	29,966	29,966
Total	$ 9,478,963	$ -	$ 873,487	$ 8,605,476	$ 254,922

Business-type activities:

	Balance June 30, 2017	Net Additions	Net Deletions	Balance June 30, 2018	Due within One Year
Compensated absences	$ 228,818	$ 16,327	$ -	$ 245,145	$ 151,943
Net pension liability	3,807,095	-	203,923	3,603,172	-
OPEB obligation payable (restated)	96,434	-	3,645	92,789	-
Landfill closure and postclosure costs	20,000	20,000	-	40,000	-
Bond payable	233,006	-	21,894	211,112	22,691
Total	$ 4,385,353	$ 36,327	$ 229,462	$ 4,192,218	$ 174,634

The compensated absence liability will be liquidated primarily by the General Fund. The note payable will be paid by the Federal in Lieu Fund. The capital leases will be paid by the Vehicle Capital Projects Fund.

Per Nevada Revised Statute Chapter 244A.059, the debt limitation for the County is equal to 10 percent of the assessed valuation of property, excluding motor vehicles for the current year. The debt limitation currently applicable at June 30, 2018, was $28,658,088.

NOTE D. DETAILED NOTES ON ALL FUNDS (Continued)

7. Interfund Transfers

Interfund operating transfers are made from one fund to another fund to support expenditures in accordance with the authority established for the individual funds. Transfers between fund types during the year ended June 30, 2018, were:

	Total	Transfer Out					
	Transfers In	General	Road	Federal In Lieu	LC Water District Water Resources	Nonmajor Special Revenue	Nonmajor Capital Projects
General Fund	$ 340,000	$ -	$ -	$ 340,000	$ -	$ -	$ -
County Grant Fund	78,762	-	-	31,041	-	47,721	-
Nonmajor Special Revenue Funds	265,197	50,000	-	32,197	100,000	83,000	-
Nonmajor Capital Projects Funds	223,817	16,000	100,000	-	-	-	107,817
Major Enterprise - Detention Center	21,820			21,820		-	
Major Enterprise - Solid Waste	175,151			175,151		-	
Nonmajor Enterprise Funds	40,000	-	-	40,000	-	-	-
Total	$ 1,144,747	$ 66,000	$ 100,000	$ 640,209	$ 100,000	$ 130,721	$ 107,817

Following are explanations of certain interfund transfers of significance to the County:

The General Fund transferred money to the following funds: Vehicle Capital Projects $16,000 and China Springs $10,000 to help cover costs. The General Fund also transferred funds to the Special Projects Fund, which is internally reported in the General Fund, for future projects. The Special Projects Fund did a budgeted transfer to the Property Management Fund to help cover construction costs of $40,000.

The Road Fund transferred $100,000 to the Road Capital Projects Fund to help cover the costs of a new equipment.

The Federal in Lieu Fund transferred money to the following funds: General Fund $265,000, Building Enterprise Fund $40,000, Solid Waste Fund $175,151, Detention Center Fund $21,820, Planning Fund $75,000, Agriculture Extension Fund $7,000, and Resource Development Fund $10,000. These budgeted transfers were made to help cover operating costs. Transfers were also made for $31,041 to the County Grant Fund and $15,197 to the Senior Nutrition Fund for grant match.

The Water District Water Resources Fund transferred $100,000 to the Water District General Fund to cover costs.

The Room Tax Fund transferred $20,000 to the Fair Board Fund to help cover costs and the Library Fund transferred $4,000 to the County Grants Fund. The Regional Transportation Commission Fund transferred $63,000 to the Transportation Fund for operations and $43,721 to the County Grants Fund for grant match.

The Capital Projects Fund transferred money to the following capital projects funds: $98,000 to the Vehicle Capital Projects for assistance with capital asset purchases; $9,817 to the Alamo, Panaca, and Pioche Town Capital Projects Funds for distribution of property taxes collected pursuant to Nevada Revised Statutes 354.59815.

NOTE D. DETAILED NOTES ON ALL FUNDS (Continued)

8. Interfund Receivable / Payable

During the 2017 fiscal year the County purchased the Landfill and created the Solid Waste Enterprise Fund. To help cover initial costs and have cash available, the fund borrowed monies from two special revenue funds which is to be repaid over 10 years at 0% interest. The funds which will receive those payments are as follows:

	Due to		Due from
Lincoln County Land Act	$ 190,000	Solid Waste Enterprise	$ 380,000
Lincoln County Water Special Use	190,000		
	$ 380,000		

Annual debt service requirements to maturity for the payable are as follows:

Year Ending June 30,	Principal
2019	$ 20,000
2020	20,000
2021	40,000
2022	40,000
2023	40,000
2024-2027	220,000
	$ 380,000

9. Unearned Revenue

Governmental funds report unearned revenue in connection with receivables for revenues that are not considered to be available to liquidate liabilities of the current period and also in connection with the resources that have been received but not yet earned. At June 30, 2018, the County had the following unearned revenues:

Qualifying expenditures for expenditure-driven grants have not occurred before June 30, 2018.

County Grant	Other Governmental	Total
$ 165,920	$ 144,572	$ 310,492

Nuclear Waste Fund Grant fund unspent interest as of June 30, 2018, is required by the granting agency to be deferred until spent. The following interest has been recorded as unearned revenue in the Nuclear Waste Fund of $33,508.

10. Unavailable Revenue

Delinquent taxes receivable not collected within sixty days after year-end are recorded as deferred inflows of resources as they are not available to pay liabilities of the current period. At June 30, 2018, the County had the following unavailable revenues:

General	Other Governmental	Total
$ 26,703	$ 11,758	$ 38,461

NOTE D. DETAILED NOTES ON ALL FUNDS (Continued)

11. Risk Management

Property, Casualty, Crime, and Machinery Insurance

The County is exposed to various risks of loss related to torts; theft of, damage to, and destruction of assets; errors and omissions; injuries to employees; and natural disasters. The County joined together with other local governments throughout the State of Nevada to create a pool under the Nevada Interlocal Cooperation Act. The Nevada Public Agency Insurance Pool (NPAIP) is a public entity risk pool currently operating as a common risk management and insurance program for members. The County pays an annual premium and specific deductibles, as necessary, to NPAIP for its general insurance coverage. NPAIP is considered a self-sustaining risk pool that will provide liability coverage for its members up to $10,000,000 per event and a $10,000,000 annual aggregate per member. Property, crime, and equipment breakdown coverage is provided to its members up to $300,000,000 per loss with various sub-limits established for earthquake, flood, equipment breakdown, and money and securities. As a participatory member, the maintenance deductible is $2,000 for each insured event.

The County is self-insured for unemployment claims. Payments are made from the general fund to cover claims.

The County participates in the Public Agency Compensation Trust (PACT). Premiums paid to PACT cover workers' compensation claims against the County. Premiums are based on a percentage of wages paid.

The County carries commercial insurance for all other risks of loss including employee health and accident insurance. Settled claims resulting from these risks have not exceeded commercial insurance coverage in any of the past three fiscal years.

12. Contingent Liabilities

Grants
Amounts received or receivable from grantor agencies are subject to audit and adjustment by those agencies, principally the Federal Government. Any disallowed claims, including amounts already collected, may constitute a liability of the applicable funds. The amount, if any, of expenditures which may be disallowed by the grantor cannot be determined at this time although the County expects such amounts, if any, to be immaterial.

Litigation
The County is a defendant in various lawsuits. Although the outcome of these lawsuits is not presently determinable, it is the opinion of the County's counsel that resolution of these matters will not have a material adverse effect on the financial condition of the County.

Landfill Closure and Post-Closure Costs
State and federal laws and regulations require the County to place a final cover on its landfill sites when it stops accepting waste and to perform certain maintenance and monitoring functions at the sites for thirty years after closure. The closure and post-closure care costs will be paid only near or after the date that the landfills stop accepting waste.

As of June 30, 2018, the estimated liability to date for closure and post-closure costs is $40,000. This represents the cumulative amount reported to date based on percent use of the estimated liability of $1,700,000 as the remaining capacity is used. Actual costs may be higher due to inflation, changes in technology, or changes in regulations. The County operates one landfill with an estimated remaining life of 39 years. As of June 30, 2018, $40,005, has been restricted for future closure, post-closure, and opening landfill costs in the Solid Waste Fund. The County is presently using the "Local Government Test" as financial assurance mechanism for its closure and post-closure costs.

NOTE D. DETAILED NOTES ON ALL FUNDS (Continued)

13. Defined Benefit Pension Plan

Plan Description. All half time and greater County employees are provided pension benefits through the Public Employees' Retirement System of the State of Nevada (PERS), a cost sharing multiple-employer, defined benefit plan administered by the Public Employees' Retirement System of the State of Nevada. PERS provides retirement benefits, disability benefits, and death benefits, including annual cost of living adjustments, to plan members and their beneficiaries. NRS Chapter 286 establishes the benefit provisions provided to the participants of PERS. These benefit provisions may only be amended through legislation. The Public Employees' Retirement System of the State of Nevada issues a publicly available financial report that includes financial statements and required supplementary information for PERS that can be obtained at www.nvpers.org under Quick Links — Publications.

Benefits Provided. Benefits, as required by the Nevada Revised Statutes (NRS or statute), are determined by the number of years of accredited service at time of retirement and the member's highest average compensation in any 36 consecutive months. Vested members are entitled to a life-time monthly retirement benefit equal to the service time multiplier (STM) percentages listed below times the member's years of service to a maximum of 30 years. The schedule of Eligibility for Monthly Unreduced Retirement Benefits for regular members and police/fire members are as follows:

Eligibility for Regular Members:

Years of Service	Hired prior to 07/01/01		Hired between 07/01/01-12/31/09		Hired Between 12/31/09-07/01/15		Hired After 7/1/15	
	Age	STM%	Age	STM%	Age	STM%	Age	STM%
5 years	65	2.50%	65	2.67%	65	2.50%	65	2.25%
10 years	60	2.50%	60	2.67%	62	2.50%	62	2.25%
30 years	Any	2.50%	Any	2.67%	Any	2.50%	55	2.25%
33 1/3 years							Any	2.25%

Eligibility for Police and Fire Members:

Years of Service	Hired prior to 07/01/01		Hired between 07/01/01-12/31/09		Hired Between 12/31/09-07/01/15		Hired After 7/1/15	
	Age	STM%	Age	STM%	Age	STM%	Age	STM%
5 years	66	2.50%	66	2.67%	65	2.50%	65	2.50%
10 years	55	2.50%	55	2.67%	60	2.50%	60	2.50%
20 years	50	2.50%	50	2.67%	50	2.50%	50	2.50%
25 years	Any	2.50%	Any	2.67%				
30 years					Any	2.50%		

* Only service performed in a position as a police officer or firefighter may be counted towards eligibility for retirement as Police/Fire accredited service.

Benefit payments to which participants or their beneficiaries may be entitled under the plan include pension benefits, disability benefits, and survivor benefits. The System offers several alternatives to the unmodified service retirement allowance which, in general, allow the retired employee to accept a reduced service retirement allowance payable monthly during his or her lifetime and various optional monthly payments to a named beneficiary after his or her death. Post-retirement increases are provided by authority of NRS 286.575 - .579.

The normal ceiling limitation on monthly benefits allowances is 75% of average compensation. However, a member who has an effective date of membership before July 1, 1985, is entitled to a benefit of up to 90% of average compensation. Both Regular and Police/Fire members become fully vested as to benefits upon completion of five years of service.

NOTE D. DETAILED NOTES ON ALL FUNDS (Continued)

13. Defined Benefit Pension Plan (Continued)

Contributions: Benefits for plan members are funded under the employer pay contribution plan. The County is required to contribute all amounts due under the plan. PERS receives an actuarial valuation on an annual basis indicating the contribution rates required to fund the System on an actuarial reserve basis. Contributions actually made are in accordance with the required rates established by the Nevada Legislature. These statutory rates are increased/decreased pursuant to NRS 286.421 and 286.450. The County's required contribution rates for the year ending June 30, 2018, were 40.50% for police and fire; 28.00% for regular employees; 41.0% for judge; and 14.00% employee/employer match. The County has fully funded the amounts due for the year ending June 30, 2018. For purposes of GASB No. 82, the County recognized only the employer portion as a deferred outflow.

The actuary funding method used is the Entry Age Normal Cost Method. It is intended to meet the funding objective and result in a relatively level long-term contribution requirement as a percentage of salary.

Pension Liabilities, Pension Expense, and Deferred Outflows of Resources and Deferred Inflows of Resources Related to Pensions

At June 30, 2018, the County reported a liability of $11,180,767 for its proportionate share of the net pension liability. The net pension liability was measured as of June 30, 2017, and the total pension liability used to calculate the net pension liability was determined by an actuarial valuation as of that date. The County's allocation percentage of the net pension liability was based on the total contributions due on wages paid during the measurement period. Each employer's proportion of the net pension liability is based on their combined employer and member contributions relative to the total combined employer and member contributions for all employers for the period ended June 30, 2017. At June 30, 2017, the County's proportion was 0.08407 percent.

For the year ended June 30, 2018, the County recognized pension expense of $492,562. At June 30, 2018, the County reported deferred outflows of resources and deferred inflows of resources related to pensions from the following sources:

	Deferred Outflows of Resources	Deferred Inflows of Resources
Differences between expected and actual results	$ 0	$ 733,684
Net difference between projected and actual earnings on pension plan investments	72,595	0
Changes in proportion	252,846	491,782
Changes in assumption	741,738	
County Contributions subsequent to measurement date	647,631	0
Total	$ 1,714,810	$ 1,225,466

NOTE D. DETAILED NOTES ON ALL FUNDS (Continued)

13. Defined Benefit Pension Plan (Continued)

$647,631 was reported as deferred outflows of resources related to pensions resulting from County contributions subsequent to the measurement date will be recognized as a reduction of the net pension liability in the year ended June 30, 2018. Other amounts reported as deferred outflows of resources and deferred inflows of resources related to pensions will be recognized in pension expense as follows:

Year ended June 30:	
2018	$(234,863)
2019	230,730
2020	41,992
2021	(245,939)
2022	29,203
2023	20,590
	$(158,287)

Actuarial Assumptions: The System's net pension liability was measured as of June 30, 2017, and the total pension liability used to calculate the net pension liability was determined by an actuarial valuation as of that date. The total pension liability was determined using the following actuarial assumptions, applied to all periods included in the measurement:

Inflation rate	2.75%
Payroll Growth	5.00%, including inflation
Investment Rate of Return	7.50%
Productivity pay increase	0.50%
Projected Salary increases	Regular: 4.25% to 9.15%, depending on service
	Police/Fire: 4.55% to 13.90%, depending on service
	Rates include inflation and productivity increases
Consumer Price Index	2.75%

Changes of assumptions and other inputs reflect a change in the discount rate from 8.00% as of June 30, 2016, to 7.50% as of June 30, 2017.

Mortality rates were based on the RP-2000 Combined Healthy Mortality Table for Males and Females, as appropriate, with adjustments for mortality improvements based on Scale AA.

Actuarial assumptions used in the June 30, 2017, valuation were based on the results of the experience review completed in 2017.The System's policies, which determine the investment portfolio target asset allocation, are established by the Public Employees' Retirement Board. The asset allocation is reviewed annually and is designed to meet the future risk and return needs of the System.

NOTE D. DETAILED NOTES ON ALL FUNDS (Continued)

13. Defined Benefit Pension Plan (Continued)

The following was the Board adopted policy target asset allocation as of June 30, 2017:

Asset Class	Target Allocation	Long-Term Geometric Expected Real Rate of Return*
Domestic Equity	42%	5.50%
International Equity	18%	5.75%
Domestic Fixed	30%	0.25%
Private Markets	10%	6.80%

*As of June 30, 2017, PERS' long-term inflation assumption was 2.75%

Discount Rate: The discount rate used to measure the total pension liability was 7.50% as of June 30, 2017. The projection of cash flows used to determine the discount rate assumed that employee and employer contributions will be made at the rate specified in statute. Based on that assumption, the pension plan's fiduciary net position at June 30, 2017, was projected to be available to make all projected future benefit payments of current active and inactive employees. Therefore, the long-term expected rate of return on pension plan investments was applied to all periods of projected benefit payments to determine the total pension liability as of June 30, 2017.

Sensitivity of the County's proportionate share of the net pension liability to change in the discount rate: The following presents the County's proportionate share of the net pension liability calculated using the discount rate of 7.50 percent, as well as what the County's proportionate share of the net pension liability would be if it were calculated using a discount rate that is 1 percent higher or lower than the current rate.

	1.0% Decrease (7.0%)	Discount Rate (8.0%)	1.0% Increase (9.0%)
County's proportionate share of the net pension liability	$ 16,902,821	$ 11,180,767	$ 6,429,266

Pension Plan Fiduciary Net Position: Detailed information about the pension plan's fiduciary net position is available in the PERS Comprehensive Annual Financial Report, available on the PERS website.

Pension contributions payable: At June 30, 2018, the County reported payables to the defined benefit pension plan of $25,961 for legally required employer contributions which had not yet been remitted to PERS.

NOTE D. DETAILED NOTES ON ALL FUNDS (Continued)

14. Post-Employment Healthcare Plan

Plan Description: The County subsidizes eligible retirees' contributions to the Public Employees' Benefits Plan (PEBP), an agent multiple-employer defined benefit postemployment health care plan administered by the State of Nevada. The plan provides medical, vision, dental and life insurance benefits to eligible retired County employees and beneficiaries. NRS 287.041 assigns the authority to establish and amend benefit provisions to the PEBP nine-member board of trustees. The plan is now closed to current County retirees. However, County employees who previously met the eligibility requirement for retirement within the Nevada Public Employees' Retirement System had the option upon retirement to enroll in coverage under the PEBP and the subsidy provided by the County was determined by their number of years of service. The PEBP issues a publicly available financial report that includes financial statements and required supplementary information. That report may be obtained by writing to Public Employee's Benefits Program, 901 S. Stewart Street, Suite 1001, Carson City, NV 89701, by calling (775) 684-7000, or by accessing the website at https://pebp.state.nv.us under Resources – Fiscal & Utilization Reports.

Employees covered by benefit terms. At June 30, 2018, the following employees were covered by the benefit terms:

Inactive employees or beneficiaries currently receiving benefit payments	25
Inactive employees entitled to but not yet receiving benefit payments	0
Active employees	0
	25

Funding Policy NRS 287.046 establishes the subsidies to be contributed toward the premium costs of the eligible retired County employees. As noted above, the County policy is to only fund retirees who retired prior to July 1, 2009. Plan members receiving benefits have their monthly contributions deducted from their pension checks based on the health plan chosen by the retiree as reduced by the amount of the subsidy. Effective July 2015, the subsidy provided to pre-Medicare retirees varies based on the type of plan selected (PPO or HMO) and by the level of coverage taken (e.g., single, two party, family, etc.). The chart below shows our understanding of monthly amounts currently payable for those with 15 years of PERS service.

Coverage Level	PPO CDHP	Standard HMO	Alternate HMO
	15 Years of Service		
Retiree Only	$ 709.19	$ 429.26	$ 412.43
Retiree + Spouse	1,158.03	678.83	645.18
Retiree + Child(ren)	1,098.13	557.66	530.78
Retiree + Family	1,546.96	807.23	763.52

All Medicare eligible retirees participate in a Medicare Exchange with PEBP providing a service related contribution to a Health Reimbursement Arrangement (HRA) equal to $12 per month per year of service (maximum $240 per month). The contribution requirements of plan members and the County are established and amended by the PEBP board of trustees. As a participating employer, the County is billed for the subsidy on a monthly basis and is legally required under NRS 287.023 to provide for it.

For fiscal year 2018, the County contributed $51,515 to the plan for current premiums. The County did not prefund any future benefits.

NOTE D. DETAILED NOTES ON ALL FUNDS (Continued)

14. Post-Employment Healthcare Plan (Continued)

Important Dates used in the Valuation:

Valuation Date:	June 30, 2017
Measurement Date:	June 30, 2017
Measurement Period:	June 30, 2016 to June 30, 2017
Fiscal Year End:	June 30, 2018

Significant Results and Differences from the Prior Valuation:

This is the first report reflecting the requirements of Governmental Accounting Standards Board Statement No. 75. The assumptions used to develop the information in this report are the same assumptions used for the June 30, 2017, valuation. The only difference is the discount rate applied to develop the liability at the beginning of the measurement period, as required by Governmental Accounting Standards Board Statement No. 75. The beginning of the period liability was calculated by rolling back the June 30, 2017, valuation results.

Total Other Post-Employment Benefits (OPEB) Liability

The County's OPEB liability of $577,776 was measured as of June 30, 2017, and determined by actuarial valuation as of that date.

The County has elected to calculate the total OPEB liability and related information using the alternative measurement method permitted by Governmental Accounting Standards Board Statement No. 75 for employers in plans with fewer than one hundred total plan members.

Actuarial Assumptions and Other Inputs: The total OPEB liability in the June 30, 2017, actuarial valuation was determined using the following actuarial assumptions and other inputs, applied to all periods included in the measurement:

	PEBP
Inflation rate	2.75%
Salary Increase	Not applicable; there are no active employees in this plan.
Discount Rate	3.13%
Healthcare Cost Trend Rates	7.00% decreasing 0.5% per year to an ultimate rate of 5.00% for 2023 and later years.
Retirees' share of benefit-related costs	0%

The discount rate was based on the S & P General Obligation Municipal Bond 20 year High Grade Index.

Mortality rates were based on the social security administration's actuarial life tables.

Actuarial assumptions used in the June 30, 2017, valuation were based on the results of an actuarial experience study for the period of June 30, 2016, to June 30, 2017.

NOTE D. DETAILED NOTES ON ALL FUNDS (Continued)

14. Post-Employment Healthcare Plan (Continued)

Changes in the Total OPEB Liability

	PEBP
Service cost	$ 0
Interest	27,562
Changes of benefit terms	0
Differences between expected and actual experience	0
Changes in assumptions or other inputs	(270,391)
Benefit payments	(59,983)
Net changes	(302,812)
Net OPEB obligation - beginning of the year	0
Restated for GASB 75	880,588
Net OPEB obligation - beginning of the year	880,588
Net OPEB obligation - end of year	$ 577,776

Changes of assumptions and other inputs reflect a change in the discount rate from 2.68% as of June 30, 2016, to 3.13% as of June 30, 2017.

Sensitivity of the County's total OPEB liability to changes in the discount rate. The following presents the total OPEB liability of the County, as well as what the County's total OPEB liability would be if it were calculated using a discount rate that is 1 percent higher or lower than the current rate.

	1.0% Decrease (2.13%)	Discount Rate (3.13%)	1.0% Increase (4.13%)
PEBP	$ 627,111	$ 577,776	$ 534,105

Sensitivity of the County's total OPEB liability to changes in the healthcare cost trend rates. The following presents the total OPEB liability of the County, as well as what the County's total OPEB liability would be if it were calculated using healthcare cost trend rates that are 1 percent higher or lower than the current healthcare cost trend rates:

	1.0% Decrease (6% decreasing to 4.0%)	Discount Rate (7% decreasing to 5.0%)	1.0% Increase (8% decreasing to 6.0%)
PEBP	$ 532,011	$ 577,776	$ 628,535

NOTE D. DETAILED NOTES ON ALL FUNDS (Continued)

OPEB Expense, Deferred Outflows of Resources, and Deferred Inflows of Resources Related to OPEB

For the year ended June 30, 2018, the County recognized OPEB expense of $249,809. At June 30, 2018, the County reported deferred outflows of resources and deferred inflows of resources related to pensions from the following sources:

	Deferred Outflows of Resources	Deferred Inflows of Resources
Differences between expected and actual results	$ 0	$ 0
Changes of assumptions or other inputs	0	0
County Contributions subsequent to measurement date	51,515	0
Total	$ 51,515	$ 0

$51,515 reported as deferred outflows of resources related to OPEB resulting from County contributions subsequent to the measurement date will be recognized as a reduction of the total OPEB liability in the year ended June 30, 2019. There were no other amounts reported as deferred outflows of resources and deferred inflows of resources related to OPEB to be recognized as OPEB expense.

15. Water Sales

The Water District has entered into a water delivery teaming agreement. The purpose of the agreement is to develop a water infrastructure and provide wholesale water to adjoining water districts and/or developers who require water. Investment to develop the water sources are funded by the partner. The Water District is not required to provide funding. Should projects fail, the Water District has no liability for costs incurred by the partner. If the projects are completed and revenues are generated from the sale of water, revenues collected will be applied to the investment of the partner until paid in full for the successful projects. After payment of project expenditures, the Water District will be entitled to 50 percent of remaining monies. Should the Water District withdraw from the agreement, the Water District will be required to reimburse the partner's investment costs. Revenues, if any, from water sales are recorded in the Lincoln County Water District funds.

16. Change in Accounting Principle

Effective July 1, 2017, the County adopted Governmental Accounting Standards Board Statement (GASB) No. 75, *Accounting and Financial Reporting for Postemployment Benefits Other than Pensions*. GASB No. 75 addresses accounting and financial reporting for other postemployment benefits provided to the County's employees through the Nevada Public Employees' Benefit Plan (PEBP). The statement also requires various note disclosures and required supplementary information. The effect of the implementation of this standard on beginning net position is disclosed in Note D-18.

NOTE D. DETAILED NOTES ON ALL FUNDS (Continued)

17. Correction of Errors

Governmental Accounting Standards Board (GASB) Statement No. 82, *Pension Issues – An Amendment of GASB No. 67, No. 68, and No. 73.* was effective for periods beginning after June 15, 2016. GASB 82 addresses some issues raised with previous GASB statements including No. 68. More specifically, GASB No. 82 addressed the following issues: (1) the presentation of payroll-related measures in required supplementary information, (2) the selection of assumptions and the treatment of deviations from the guidance in an Actuarial Standard of Practice for financial reporting purposes, and (3) the classification of payments made by employers to satisfy employee (plan member) contribution requirements.

Certain errors occurred in the determination or classification of payments to satisfy employee contribution requirements in the adoption, as of July 1, 2016, of GASB Statement No. 82, *Pension Issues – An Amendment of GASB No. 67, No. 68, and No. 73* resulting in the overstatement of amounts previously reported for deferred outflows of resources, net pension liability-related amounts for the year ended June 30, 2017. Corrections of the amounts for deferred outflows of resources have resulted in a restatement of net position as of July 1, 2017.

Because PERS is a state-wide multi-employer plan that covers substantially all employees of the State, its agencies, and its political subdivisions, including the employees of the County, it is the responsibility of the State Controller's office to perform the GASB calculations according to the applicable pension related statements and disseminate that information to the applicable agencies and political subdivisions for inclusion in their audited financial statements. The eventual dissemination of the GASB No. 82 information occurred after most of the State's political subdivisions had already issued and filed their audited financial statements.The County did not receive the GASB No. 82 information in time to include it in its fiscal year 2017 audited financial statements; accordingly, the County implemented GASB No. 82 in fiscal year 2018. The effect of the implementation of these standards on beginning net position is disclosed in Note D-18.

18. Change in Net Position

As of July 1, 2017, the County adopted Governmental Accounting Standards Board Statement No. 75, *Accounting and Financial Reporting for Postemployment Benefits Other than Pensions* and Governmental Accounting Standards Board Statement No. 82, *Pension Issues.* The effect of the implementation of these standards on beginning net position is as follows:

	Governmental	Business-Type
Net position previously reported, July 1, 2017	$ 34,154,240	$ (461,902)
Change in total OPEB liability (GASB 75-OPEB)	(784,154)	(96,434)
Deferred outflows of resources for contributions made subsequent to the measurement date (GASB 75-OPEB)	49,358	10,625
Deferred outflows of resources for contributions made subsequent to the measurement date (GASB 82-Pension)	(451,620)	(200,322)
Deferred inflows of resources for differences between employer contributions and proportionate share of contributions (GASB 82-Pension)	87,642	39,073
Net position as restated	$33,055,466	$ (708,960)

LINCOLN COUNTY, NEVADA
REQUIRED SUPPLEMENTARY INFORMATION
MAJOR FUND - GENERAL FUND
SCHEDULE OF REVENUES, EXPENDITURES AND CHANGES IN FUND BALANCE
BUDGET (BUDGETARY BASIS) AND ACTUAL
Year Ended June 30, 2018

	Original Budget	Final Budget	Actual	Variance With Final Budget Positive (Negative)
Revenues:				
Taxes:				
Property taxes	$ 2,180,803	$ 2,180,803	$ 2,132,619	$ (48,184)
Licenses and permits:				
Business licenses	7,200	7,200	10,325	3,125
Liquor licenses	5,100	5,100	6,047	947
Gaming licenses	5,200	5,200	2,912	(2,288)
Marriage licenses	650	650	588	(62)
Total licenses and permits	18,150	18,150	19,872	1,722
Intergovernmental:				
Gaming tax	141,000	141,000	134,621	(6,379)
Private car line tax	4,100	4,100	3,945	(155)
Water District	7,000	7,000	21,597	14,597
Consolidated tax	1,260,971	1,260,971	1,304,072	43,101
Grants	28,305	28,305	43,699	15,394
Marijuana fees	-	-	88,235	88,235
Fish and wildlife	-	-	2,555	2,555
Total intergovernmental	1,441,376	1,441,376	1,598,724	157,348
Charges for services:				
Clerk fees	6,000	6,000	11,254	5,254
Recorder fees	50,000	50,000	64,079	14,079
Assessor commissions	65,500	65,500	30,492	(35,008)
Sheriff fees	2,500	2,500	7,402	4,902
Tax penalties and costs	45,000	45,000	50,533	5,533
District attorney fees	500	500	156	(344)
Civil fees	-	-	3,096	3,096
Security contract	122,000	122,000	122,000	-
Caliente police contract	75,000	75,000	64,800	(10,200)
Caliente court contract	7,000	7,000	3,150	(3,850)
Total charges for services	373,500	373,500	356,962	(16,538)
Fines and forfeitures:				
Fines and forfeitures	360,000	360,000	293,668	(66,332)
Miscellaneous:				
Investment income	10,000	10,000	661	(9,339)
Rent, sales, refunds	40,000	40,000	46,812	6,812
Solid waste	4,000	4,000	-	(4,000)
Other	5,000	5,000	8,129	3,129
Total miscellaneous	59,000	59,000	55,602	(3,398)
Total revenues	$ 4,432,829	$ 4,432,829	$ 4,457,447	$ 24,618

See accompanying notes to required supplementary information.

LINCOLN COUNTY, NEVADA
REQUIRED SUPPLEMENTARY INFORMATION
MAJOR FUND - GENERAL FUND
SCHEDULE OF REVENUES, EXPENDITURES AND CHANGES IN FUND BALANCE
BUDGET (BUDGETARY BASIS) AND ACTUAL (CONTINUED)
Year Ended June 30, 2018

	Original Budget	Final Budget	Actual	Variance With Final Budget Positive (Negative)
General government:				
Administration:				
County commissioners:				
Salaries and wages	$ 113,721	$ 132,721	$ 132,382	$ 339
Employee benefits	70,948	81,948	89,735	(7,787)
Services and supplies	16,500	16,500	15,067	1,433
Total county commissioners	201,169	231,169	237,184	(6,015)
Executive officer:				
Salaries and wages	21,008	21,008	20,523	485
Employee benefits	11,555	11,755	11,574	181
Services and supplies	900	900	797	103
Total executive officer	33,463	33,663	32,894	769
Clerk:				
Salaries and wages	123,116	123,116	115,479	7,637
Employee benefits	50,754	50,754	50,139	615
Services and supplies	45,600	45,600	14,424	31,176
Total clerk	219,470	219,470	180,042	39,428
Treasurer:				
Salaries and wages	111,716	111,716	109,779	1,937
Employee benefits	48,681	48,681	48,253	428
Services and supplies	11,830	11,830	10,878	952
Total treasurer	172,227	172,227	168,910	3,317
Auditor and recorder:				
Salaries and wages	157,924	157,924	155,078	2,846
Employee benefits	67,574	67,574	66,821	753
Services and supplies	16,467	16,467	13,796	2,671
Total auditor and recorder	241,965	241,965	235,695	6,270
Assessor:				
Salaries and wages	144,284	144,284	142,348	1,936
Employee benefits	69,726	69,726	69,380	346
Services and supplies	23,000	23,000	12,396	10,604
Total assessor	237,010	237,010	224,124	12,886
Grant administrator:				
Salaries and wages	54,747	54,747	54,747	-
Employee benefits	19,469	19,469	19,478	(9)
Services and supplies	8,200	8,200	7,670	530
Total grant administrator	82,416	82,416	81,895	521

See accompanying notes to required supplementary information.

LINCOLN COUNTY, NEVADA
REQUIRED SUPPLEMENTARY INFORMATION
MAJOR FUND - GENERAL FUND
SCHEDULE OF REVENUES, EXPENDITURES AND CHANGES IN FUND BALANCE
BUDGET (BUDGETARY BASIS) AND ACTUAL (CONTINUED)
Year Ended June 30, 2018

	Original Budget	Final Budget	Actual	Variance With Final Budget Positive (Negative)
General government (Continued):				
Business license:				
Salaries and wages	$ 5,105	$ 5,105	$ 7,361	$ (2,256)
Employee benefits	1,778	1,778	1,656	122
Services and supplies	1,500	1,500	1,266	234
Total business license	8,383	8,383	10,283	(1,900)
Buildings and grounds:				
Pioche:				
Salaries and wages	30,076	30,076	44,342	(14,266)
Employee benefits	8,439	8,439	8,808	(369)
Services and supplies	148,825	148,825	100,263	48,562
Total Pioche	187,340	187,340	153,413	33,927
Alamo:				
Salaries and wages	8,109	8,109	8,316	(207)
Employee benefits	854	854	884	(30)
Services and supplies	15,033	15,033	14,131	902
Total Alamo	23,996	23,996	23,331	665
Total buildings and grounds	211,336	211,336	176,744	34,592
Other general expenses:				
Employee benefits	56,000	56,000	51,229	4,771
Services and supplies	203,205	212,582	156,061	56,521
Total other general expenses	259,205	268,582	207,290	61,292
Total general government	1,666,644	1,706,221	1,555,061	151,160

See accompanying notes to required supplementary information.

LINCOLN COUNTY, NEVADA
REQUIRED SUPPLEMENTARY INFORMATION
MAJOR FUND - GENERAL FUND
SCHEDULE OF REVENUES, EXPENDITURES AND CHANGES IN FUND BALANCE
BUDGET (BUDGETARY BASIS) AND ACTUAL (CONTINUED)
Year Ended June 30, 2018

	Original Budget	Final Budget	Actual	Variance With Final Budget Positive (Negative)
Public safety:				
Sheriff:				
Salaries and wages	$ 883,197	$ 883,197	$ 830,042	$ 53,155
Employee benefits	521,940	521,940	528,502	(6,562)
Services and supplies	194,269	194,269	170,678	23,591
Capital outlay	-	-	22,353	(22,353)
Total sheriff	1,599,406	1,599,406	1,551,575	47,831
Emergency management:				
Salaries and wages	34,050	34,050	35,148	(1,098)
Employee benefits	10,800	10,800	9,952	848
Services and supplies	5,100	5,100	-	5,100
Total emergency management	49,950	49,950	45,100	4,850
Caliente contract:				
Salaries and wages	87,306	87,306	78,323	8,983
Employee benefits	47,778	47,778	47,479	299
Services and supplies	4,600	4,600	1,405	3,195
Total Caliente contract	139,684	139,684	127,207	12,477
Total public safety	1,789,040	1,789,040	1,723,882	65,158
Judicial:				
District court:				
Salaries and wages	118,245	118,245	93,746	24,499
Services and supplies	217,300	292,300	292,195	105
Total district court	335,545	410,545	385,941	24,604
District attorney:				
Salaries and wages	233,770	243,770	240,539	3,231
Employee benefits	95,396	100,796	96,683	4,113
Services and supplies	30,000	50,000	43,967	6,033
Capital outlay	-	1,600	-	1,600
Total district attorney	359,166	396,166	381,189	14,977

See accompanying notes to required supplementary information.

LINCOLN COUNTY, NEVADA
REQUIRED SUPPLEMENTARY INFORMATION
MAJOR FUND - GENERAL FUND
SCHEDULE OF REVENUES, EXPENDITURES AND CHANGES IN FUND BALANCE
BUDGET (BUDGETARY BASIS) AND ACTUAL (CONTINUED)
Year Ended June 30, 2018

	Original Budget	Final Budget	Actual	Variance With Final Budget Positive (Negative)
Judicial (Continued):				
Law library	$ 12,100	$ 12,100	$ 7,168	$ 4,932
Public guardian	4,750	4,750	1,608	3,142
Public administrator	3,250	3,250	19	3,231
Justice court:				
Juvenile officers:				
Salaries and wages	60,191	60,191	60,963	(772)
Employee benefits	32,639	32,639	31,404	1,235
Services and supplies	21,000	21,000	12,013	8,987
Total juvenile officers	113,830	113,830	104,380	9,450
Alamo:				
Salaries and wages	140,629	140,629	145,905	(5,276)
Employee benefits	65,468	65,468	63,307	2,161
Services and supplies	13,964	13,964	13,286	678
Total Alamo	220,061	220,061	222,498	(2,437)
Meadow Valley:				
Salaries and wages	113,051	113,051	110,410	2,641
Employee benefits	58,866	58,866	58,581	285
Services and supplies	14,800	14,800	10,742	4,058
Total Meadow Valley	186,717	186,717	179,733	6,984
Total judicial	1,235,419	1,347,419	1,282,536	64,883
Health:				
State nurse	42,640	42,640	52,388	(9,748)
Contingency	-	234,000	-	234,000
Total expenditures	$ 4,733,743	$ 5,119,320	$ 4,613,867	$ 505,453

See accompanying notes to required supplementary information.

LINCOLN COUNTY, NEVADA
REQUIRED SUPPLEMENTARY INFORMATION
MAJOR FUND - GENERAL FUND
SCHEDULE OF REVENUES, EXPENDITURES AND CHANGES IN FUND BALANCE
BUDGET (BUDGETARY BASIS) AND ACTUAL (CONTINUED)
Year Ended June 30, 2018

	Original Budget	Final Budget	Actual	Variance With Final Budget Positive (Negative)
Excess (deficiency) of revenues over expenditures	$ (300,914)	$ (686,491)	$ (156,420)	$ 530,071
Other financing sources (uses):				
Operating transfers in	200,000	603,577	603,500	(77)
Operating transfers out	(138,000)	(156,000)	(156,000)	-
Total other financing sources (uses)	62,000	447,577	447,500	(77)
Net change in fund balance	(238,914)	(238,914)	291,080	529,994
Fund balance:				
Beginning of year	570,954	570,954	482,059	(88,895)
End of year	$ 332,040	$ 332,040	$ 773,139	$ 441,099

See accompanying notes to required supplementary information.

LINCOLN COUNTY, NEVADA
REQUIRED SUPPLEMENTARY INFORMATION
MAJOR FUND - ROAD SPECIAL REVENUE FUND
SCHEDULE OF REVENUES, EXPENDITURES AND CHANGES IN FUND BALANCE
IN FUND BALANCE - BUDGET AND ACTUAL
Year Ended June 30, 2018

	Original Budget	Final Budget	Actual	Variance With Final Budget Positive (Negative)
Revenues:				
Intergovernmental:				
Gasoline tax $2.35	$ 1,043,591	$ 1,043,591	$ 1,043,384	$ (207)
Gasoline tax $1.25	600,646	600,646	600,847	201
Gasoline tax $1.75	52,393	52,393	48,152	(4,241)
Optional $0.01 tax	25,444	25,444	23,344	(2,100)
National forest	-	-	21,230	21,230
Total intergovernmental	1,722,074	1,722,074	1,736,957	14,883
Miscellaneous:				
Investment income	800	800	170	(630)
Other	15,000	15,000	-	(15,000)
Total miscellaneous	15,800	15,800	170	(15,630)
Total revenues	1,737,874	1,737,874	1,737,127	(747)
Expenditures:				
Current:				
Public works:				
Salaries and wages	679,844	679,844	659,012	20,832
Employee benefits	303,484	303,484	278,285	25,199
Services and supplies	801,700	801,700	465,294	336,406
Capital outlay	-	-	2,500	(2,500)
Total expenditures	1,785,028	1,785,028	1,405,091	379,937
Excess (deficiency) of revenues over expenditures	(47,154)	(47,154)	332,036	379,190
Other financing sources (uses):				
Operating transfers out	(100,000)	(100,000)	(100,000)	-
Net change in fund balance	(147,154)	(147,154)	232,036	379,190
Fund balance:				
Beginning of year	423,585	423,585	404,804	(18,781)
End of year	$ 276,431	$ 276,431	$ 636,840	$ 360,409

See accompanying notes to required supplementary information.

LINCOLN COUNTY, NEVADA
REQUIRED SUPPLEMENTARY INFORMATION
MAJOR FUND - FEDERAL IN LIEU TAX SPECIAL REVENUE FUND
SCHEDULE OF REVENUES, EXPENDITURES AND CHANGES IN FUND BALANCE
IN FUND BALANCE - BUDGET AND ACTUAL
Year Ended June 30, 2018

	Original Budget	Final Budget	Actual	Variance With Final Budget Positive (Negative)
Revenues:				
Intergovernmental:				
Federal in lieu tax	$ 874,508	$ 874,508	$ 1,804,715	$ 930,207
Grants	-	57,609	57,609	-
Total intergovernmental	874,508	932,117	1,862,324	930,207
Miscellaneous:				
Investment income	5,000	5,000	1,826	(3,174)
Total revenues	879,508	937,117	1,864,150	927,033
Expenditures:				
Current:				
General government:				
Services and supplies	743,821	678,821	416,621	262,200
Capital outlay	145,000	202,609	310,024	(107,415)
Total general government	888,821	881,430	726,645	154,785
Public safety:				
Services and supplies	70,000	70,000	45,046	24,954
Capital outlay	-	-	-	-
Total public safety	70,000	70,000	45,046	24,954
Sanitation:				
Services and supplies	126,000	126,000	-	126,000
Public works:				
Capital outlay	30,000	30,000	-	30,000
Community support:				
Services and supplies	16,957	16,957	16,957	-
Intergovernmental:				
Services and supplies	75,000	75,000	70,484	4,516
Debt service:				
Principal	47,699	47,699	47,699	-
Interest	4,890	4,890	4,877	13
Total debt service	52,589	52,589	52,576	13
Total expenditures	1,259,367	1,251,976	911,708	340,268
Excess (deficiency) of revenues over expenditures	(379,859)	(314,859)	952,442	1,267,301
Other financing sources (uses):				
Operating transfers out	(392,000)	(457,000)	(640,209)	(183,209)
Net change in fund balance	(771,859)	(771,859)	312,233	1,084,092
Fund balance:				
Beginning of year	1,483,477	1,483,477	1,771,559	288,082
End of year	$ 711,618	$ 711,618	$ 2,083,792	$ 1,372,174

See accompanying notes to required supplementary information.

LINCOLN COUNTY, NEVADA
REQUIRED SUPPLEMENTARY INFORMATION
MAJOR FUND - LINCOLN COUNTY WATER DISTRICT
WATER RESOURCES SPECIAL REVENUE FUND
SCHEDULE OF REVENUES, EXPENDITURES AND CHANGES IN FUND BALANCE
IN FUND BALANCE - BUDGET AND ACTUAL
Year Ended June 30, 2018

	Original Budget	Final Budget	Actual	Variance With Final Budget Positive (Negative)
Revenues:				
Miscellaneous:				
Investment income	$ 50,000	$ 50,000	$ (8,297)	$ (58,297)
Expenditures:				
Current:				
General government:				
Services and supplies	-	-	-	-
Excess (deficiency) of revenues over expenditures	50,000	50,000	(8,297)	(58,297)
Other financing sources (uses):				
Operating transfers out:	(100,000)	(100,000)	(100,000)	-
Net change in fund balance	(50,000)	(50,000)	(108,297)	(58,297)
Fund balance:				
Beginning of year	2,919,346	2,919,346	2,841,712	(77,634)
End of year	$ 2,869,346	$ 2,869,346	$ 2,733,415	$ (135,931)

See accompanying notes to required supplementary information.

LINCOLN COUNTY, NEVADA
REQUIRED SUPPLEMENTARY INFORMATION
MAJOR FUND - LINCOLN COUNTY LAND ACT SPECIAL USE - SPECIAL REVENUE FUND
SCHEDULE OF REVENUES, EXPENDITURES AND CHANGES IN FUND BALANCE
IN FUND BALANCE - BUDGET AND ACTUAL
Year Ended June 30, 2018

	Original Budget	Final Budget	Actual	Variance With Final Budget Positive (Negative)
Revenues:				
Miscellaneous:				
Investment income	$ 300	$ 300	$ 1,308	$ 1,008
Rent	30,000	30,000	30,276	276
Total revenues	30,300	30,300	31,584	1,284
Expenditures:				
Current:				
General government:				
Services and supplies	250,000	250,000	-	250,000
Excess (deficiency) of revenues over expenditures	(219,700)	(219,700)	31,584	251,284
Fund balance:				
Beginning of year	3,721,004	3,721,004	3,727,140	6,136
End of year	$ 3,501,304	$ 3,501,304	$ 3,758,724	$ 257,420

See accompanying notes to required supplementary information.

LINCOLN COUNTY, NEVADA
REQUIRED SUPPLEMENTARY INFORMATION
MAJOR FUND - COUNTY GRANT - SPECIAL REVENUE FUND
SCHEDULE OF REVENUES, EXPENDITURES AND CHANGES IN FUND BALANCE
IN FUND BALANCE - BUDGET AND ACTUAL
Year Ended June 30, 2018

	Original Budget	Final Budget	Actual	Variance With Final Budget Positive (Negative)
Revenues:				
Intergovernmental:				
Grants	$ -	$ 2,838,202	$ 2,597,521	$ (240,681)
Miscellaneous:				
Investment income	-	-	116	116
Total revenues	-	2,838,202	2,597,637	(240,565)
Expenditures:				
Current:				
General government	-	448,384	418,792	29,592
Public safety	-	347,712	327,447	20,265
Public works	-	1,270,985	1,268,488	2,497
Welfare	-	140,025	100,949	39,076
Culture and recreation	-	631,096	560,607	70,489
Total expenditures	-	2,838,202	2,676,283	161,919
Excess (deficiency) of revenues over expenditures	-	-	(78,646)	(78,646)
Other financing sources (uses):				
Operating transfers in	-	-	78,762	78,762
Net change in fund balance	-	-	116	116
Fund balance:				
Beginning of year	65,169	65,169	63,026	(2,143)
End of year	$ 65,169	$ 65,169	$ 63,142	$ (2,027)

See accompanying notes to required supplementary information.

LINCOLN COUNTY, NEVADA
REQUIRED SUPPLEMENTARY INFORMATION
RECONCILIATION OF THE GENERAL FUND (BUDGETARY BASIS)
TO THE GENERAL FUND (GAAP BASIS)
SCHEDULE OF REVENUE, EXPENDITURES, AND CHANGES IN FUND BALANCES
For the Year Ended June 30, 2018

	General Fund Budgetary Basis	Internally Reported Funds	Eliminations	General Fund GAAP Basis
Revenues:				
Taxes	$ 2,132,619	$ -	$ -	$ 2,132,619
Licenses and permits	19,872	-	-	19,872
Intergovernmental	1,598,724	-	-	1,598,724
Charges for services	356,962	10,901	-	367,863
Fines and forfeitures	293,668	-	-	293,668
Miscellaneous	55,602	27,832	-	83,434
Total revenues	4,457,447	38,733	-	4,496,180
Expenditures:				
Current:				
General government	1,555,061	42,892	-	1,597,953
Public safety	1,723,882	-	-	1,723,882
Judicial	1,282,536	-	-	1,282,536
Public works	-	82,146	-	82,146
Health	52,388	-	-	52,388
Total expenditures	4,613,867	125,038	-	4,738,905
Excess (deficiency) of revenues over expenditures	(156,420)	(86,305)	-	(242,725)
Other financing sources (uses):				
Operating transfers in	603,500	205,000	(468,500)	340,000
Operating transfers out	(156,000)	(378,500)	468,500	(66,000)
Total other financing sources (uses)	447,500	(173,500)	-	274,000
Net change in fund balance	291,080	(259,805)	-	31,275
Fund balance:				
Beginning of year	482,059	796,214	-	1,278,273
End of year	$ 773,139	$ 536,409	$ -	$ 1,309,548

See accompanying notes to required supplementary information.

LINCOLN COUNTY, NEVADA
REQUIRED SUPPLEMENTARY INFORMATION
SCHEDULE OF CHANGES IN THE COUNTY'S TOTAL OPEB LIABILITY AND RELATED RATIOS
JUNE 30, 2018

	6/30/2018
Total OPEB Liability	
Service cost	$ -
Interest	27,562
Changes of benefit terms	-
Differences between expected and actual experience	-
Changes of assumptions or other inputs	(270,391)
Benefit Payments	(59,983)
Net Change in total OPEB liability	(302,812)
Total OPEB liability - beginning	880,588
Total OPEB liability - ending	$ 577,776
Covered-employee payroll	$ -
Total OPEB liability as a percentage of covered-employee payroll	0.00%

Note: PEBP closed to new County participants as of November 1, 2008; therefore, covered payroll is zero.

Changes of assumptions and other inputs reflect the effects of changes in the discount rate each period. The following are the discount rates used in each period.

6/30/2018	3.13
6/30/2017	2.68

See accompanying notes to required supplementary information.

LINCOLN COUNTY, NEVADA
REQUIRED SUPPLEMENTARY INFORMATION
SCHEDULE OF THE COUNTY'S CONTRIBUTIONS TO THE
PUBLIC EMPLOYEES' RETIREMENT SYSTEM OF THE STATE OF NEVADA
FOR THE FISCAL YEAR ENDED JUNE 30, 2018

Year Ended June 30	Contractually Determined Contributions	Contributions in Relation to the Actuarially Determined Contributions	Contribution Deficiency (Excess)	Covered Employee Payroll	Contributions as a Percentage of Covered Employee Payroll
2014	$ 1,164,559	$ 1,164,559	$ -	$4,098,726	28.41%
2015	1,232,695	1,232,695	-	4,381,264	28.14%
2016	1,321,892	1,321,892	-	4,218,947	31.33%
2017	1,303,882	1,303,882	-	4,687,633	27.82%
2018	647,630	647,630	-	4,770,281	13.58%

Information previous to 2013 is not available.

Beginning with the year-ended 2018, all contributions shown reflect employer-paid contributions only, and employer-paid member contributions are excluded. Actuarially Determined Contributions above are based on actuarially determined contribution rates (employer portion only) from the most recent rate-setting year prior to the year shown, applied to covered payroll for year shown.

See accompanying notes to required supplementary information.

LINCOLN COUNTY, NEVADA
REQUIRED SUPPLEMENTARY INFORMATION
SCHEDULE OF THE COUNTY'S PROPORTIONATE SHARE OF THE NET PENSION LIABILITY
PUBLIC EMPLOYEES' RETIREMENT SYSTEM OF THE STATE OF NEVADA
FOR THE FISCAL YEAR ENDED JUNE 30, 2018

Reporting Year Ended June 30:	County's proportion of the net pension liability	County's proportionate share of the net pension liability	County's covered-employee payroll	County's proportionate share of the net pension liability as a percentage of its covered-employee payroll	Plan fiduciary net position as a percentage of the total pension liability
2015	0.08508%	8,866,756	4,098,726	216.33%	76.31%
2016	0.08864%	10,157,192	4,381,264	231.83%	75.10%
2017	0.08800%	11,842,446	4,218,947	280.70%	72.20%
2018	0.08407%	11,180,767	4,687,633	238.52%	74.40%

Fiscal year 2015 was the first year of implementation, therefore, only four years are shown.

The County's proportionate share of the net pension liability is based upon the measurment taken on June 30th, of the prior year.

See accompanying notes to required supplementary information.

Note 1 – Explanation of Differences between General Fund (Budgetary Basis) and General Fund (GAAP Basis)

The accompanying Reconciliation of the General Fund (Budgetary Basis) to the General Fund (GAAP Basis) presents balances combined for external financial reporting purposes.

With the implementation of GASB Statement 54, *Fund Balance Reporting and Governmental Fund Type Definitions*, the budgetary basis of accounting for the General Fund differs from generally accepted accounting principles (GAAP).

Guidance in GASB Statement 54 changed the definition of Special Revenue Funds for financial reporting purposes. Pursuant to statute, budget comparisons are required using the budget adopted. Six internally reported special revenue funds of the County (Stabilization, Planning, Rachel Jones Memorial Cemetery, Flood Control, Special Projects, Lincoln County Land Act Emergency Disaster, and Lincoln County Water Emergency Disaster) are combined with the General Fund for external reporting purposes to conform with generally accepted accounting principles.

Note 2 – Net Pension Liability

Changes in benefit terms. Legislation passed in the 2015 Legislative session made changes to a number of plan provisions. These changes were effective July 1, 2015, and apply only to members whose effective date of membership is on or after July 1, 2015. Changes to certain survivor benefit provisions were made effective for survivors of members killed in the line of duty or in the course of employment on or after July 1, 2013, for payments on or after July 1, 2015. The July 1, 2015, sunset on the critical labor shortage exception to the reemployment restriction was repealed. There have been no changes in benefit terms since the last valuation.

Changes in assumptions. Based on the June 30, 2016, Actuarial Experience Study, the following assumptions were changed. Previously, these assumptions were as follows:

Net Investment Return:	8.00% (including 3.50% for inflation).	
Consumer Price Index:	Increase of 3.50% per year.	
Salary Increases:	*Inflation:*	3.50% Plus
	Productive pay increases:	0.75% Plus

Note 3 – Other Post-Employment Benefits Liability

Changes in benefit terms. There have been no changes in benefit terms since the last valuation.

Changes in assumptions. Changes of assumptions and other inputs reflect the effects of changes in the discount rate each period.

LINCOLN COUNTY, NEVADA
NONMAJOR GOVERNMENTAL FUNDS
COMBINING BALANCE SHEET
JUNE 30, 2018

	Nonmajor Special Revenue Funds	Nonmajor Capital Projects Funds	Totals
ASSETS			
Pooled cash and investments	$ 7,428,800	$ 1,070,077	$ 8,498,877
Interest receivable	15,549	3,501	19,050
Taxes receivable	19,119	1,668	20,787
Due from other governments	60,569	92	60,661
Due from others	1,679	-	1,679
Prepaid expense	48,000	-	48,000
Interfund receivable	190,000	-	190,000
Total assets	$ 7,763,716	$ 1,075,338	$ 8,839,054
LIABILITIES			
Accounts payable	$ 194,237	$ -	$ 194,237
Accrued payroll and benefits	68,797	-	68,797
Unearned revenue	144,572	-	144,572
Total liabilities	407,606	-	407,606
DEFERRED INFLOWS OF RESOURCES			
Unavailable revenue - property taxes	10,388	1,370	11,758
FUND BALANCE			
Nonspendable	48,000	-	48,000
Restricted for:			
Capital projects	-	1,073,968	1,073,968
Unincorporated towns	218,847	-	218,847
Multi-species conservation	862,881	-	862,881
General government	252,808	-	252,808
Public safety	66,280	-	66,280
Judicial	231,092	-	231,092
Public works	744,430	-	744,430
Health	253	-	253
Welfare	763,905	-	763,905
Culture and recreation	208,268	-	208,268
Community support	225,800	-	225,800
Intergovernmental	1,104	-	1,104
Committed for:			
Land act	132,195	-	132,195
Water	2,834,671	-	2,834,671
Lincoln County Water District	645,958		645,958
General government	100,046	-	100,046
Health	9,453	-	9,453
Unassigned	(269)	-	(269)
Total fund balance	7,345,722	1,073,968	8,419,690
Total liabilities, deferred inflows of resources, and fund balance	$ 7,763,716	$ 1,075,338	$ 8,839,054

LINCOLN COUNTY, NEVADA
NONMAJOR GOVERNMENTAL FUNDS
COMBINING STATEMENT OF REVENUES, EXPENDITURES,
AND CHANGES IN FUND BALANCE
Year Ended June 30, 2018

	Nonmajor Special Revenue Funds	Nonmajor Capital Projects Funds	Totals
Revenues:			
Taxes	$ 819,991	$ 108,877	$ 928,868
Licenses and permits	3,028	-	3,028
Intergovernmental	552,820	311	553,131
Charges for services	982,901	-	982,901
Fines and forfeitures	59,254	-	59,254
Miscellaneous	113,072	(1,431)	111,641
Total revenues	2,531,066	107,757	2,638,823
Expenditures:			
Current:			
General government	1,135,594	-	1,135,594
Public safety	16,344	-	16,344
Judicial	171,395	-	171,395
Public works	118,437	-	118,437
Health	195,366	-	195,366
Welfare	507,436	-	507,436
Culture and recreation	348,408	-	348,408
Community support	243,265	-	243,265
Intergovernmental	25,261	7,637	32,898
Capital outlay	-	248,229	248,229
Debt service:			
Principal	-	68,240	68,240
Interest	-	5,472	5,472
Total expenditures	2,761,506	329,578	3,091,084
Excess (deficiency) of revenues over expenditures	(230,440)	(221,821)	(452,261)
Other financing sources (uses):			
Operating transfers in	265,197	223,817	489,014
Operating transfers out	(130,721)	(107,817)	(238,538)
Sale of capital assets	-	53,744	53,744
Total other financing sources (uses)	134,476	169,744	304,220
Net change in fund balance	(95,964)	(52,077)	(148,041)
Fund balance:			
Beginning of year	7,441,686	1,126,045	8,567,731
End of year	$ 7,345,722	$ 1,073,968	$ 8,419,690

LINCOLN COUNTY, NEVADA
RECONCILIATION OF THE GENERAL FUND (BUDGETARY BASIS)
TO THE GENERAL FUND (GAAP BASIS)
BALANCE SHEET
June 30, 2018

	General Fund Budgetary Basis	Internally Reported Funds	General Fund GAAP Basis
ASSETS			
Pooled cash and investments	$ 683,129	$ 529,054	$ 1,212,183
Interest receivable	3,195	858	4,053
Taxes receivable	32,550	-	32,550
Due from other governments	397,413	-	397,413
Due from others	-	27,652	27,652
Due from other funds	89,535	-	89,535
Total assets	$ 1,205,822	$ 557,564	$ 1,763,386
LIABILITIES			
Accounts payable	$ 194,918	$ 19,087	$ 214,005
Accrued payroll and benefits	211,062	2,068	213,130
Total liabilities	405,980	21,155	427,135
DEFERRED INFLOWS OF RESOURCES			
Unavailable revenue - property taxes	26,703	-	26,703
FUND BALANCE			
Restricted for:			
Stabilization	-	130,904	130,904
Rachel Jones Cemetery	-	827	827
General government	-	208,567	208,567
Committed for:			
Planning	-	27,121	27,121
Flood Control	-	40,825	40,825
Land Act	-	64,723	64,723
Water	-	63,442	63,442
Assigned for:			
Subsequent year	598,226	-	598,226
Unassigned	174,913	-	174,913
Total fund balance	773,139	536,409	1,309,548
Total liabilities, deferred inflows of resources, and fund balance	$ 1,205,822	$ 557,564	$ 1,763,386

LINCOLN COUNTY, NEVADA
MAJOR FUND - GENERAL FUND (BUDGETARY BASIS)
COMPARATIVE BALANCE SHEETS
June 30, 2018 and 2017

	2018	2017
ASSETS		
Pooled cash and investments	$ 683,129	$ 512,750
Interest receivable	3,195	746
Taxes receivable	32,550	27,407
Due from other governments	397,413	295,486
Due from others	-	500
Due from other funds	89,535	-
Total assets	$ 1,205,822	$ 836,889
LIABILITIES		
Accounts payable	$ 194,918	$ 175,557
Accrued payroll and benefits	211,062	155,863
Total liabilities	405,980	331,420
DEFERRED INFLOWS OF RESOURCES		
Unavailable revenue - property taxes	26,703	23,410
FUND BALANCE		
Assigned for subsequent year	598,226	482,059
Unassigned	174,913	-
Total fund balance	773,139	482,059
Total liabilities, deferred inflows of resources, and fund balance	$ 1,205,822	$ 836,889

LINCOLN COUNTY, NEVADA
MAJOR FUND - GENERAL FUND
SCHEDULE OF REVENUES, EXPENDITURES, AND CHANGES IN FUND BALANCE
BUDGET (BUDGETARY BASIS) AND ACTUAL
Year Ended June 30, 2018
(With Comparative Actual Amounts for Year Ended June 30, 2017)

	2018 Budget	2018 Actual	Variance - Positive (Negative)	2017 Actual
Revenues:				
Taxes	$ 2,180,803	$ 2,132,619	$ (48,184)	$ 2,184,932
Licenses and permits	18,150	19,872	1,722	22,361
Intergovernmental	1,441,376	1,598,724	157,348	1,547,701
Charges for services	373,500	356,962	(16,538)	366,827
Fines and forfeitures	360,000	293,668	(66,332)	283,706
Miscellaneous	59,000	55,602	(3,398)	42,064
Total revenues	4,432,829	4,457,447	24,618	4,447,591
Expenditures:				
Current:				
General government	1,706,221	1,555,061	151,160	1,489,087
Public safety	1,789,040	1,723,882	65,158	1,630,120
Judicial	1,347,419	1,282,536	64,883	1,170,177
Health	42,640	52,388	(9,748)	42,784
Contingency	234,000	-	234,000	-
Total expenditures	5,119,320	4,613,867	505,453	4,332,168
Excess (deficiency) of revenues over expenditures	(686,491)	(156,420)	530,071	115,423
Other financing sources (uses):				
Operating transfers in	603,577	603,500	(77)	40,000
Operating transfers out	(156,000)	(156,000)	-	(242,000)
Total other financing sources (uses)	447,577	447,500	(77)	(202,000)
Net change in fund balance	(238,914)	291,080	529,994	(86,577)
Fund balance:				
Beginning of year	570,954	482,059	(88,895)	568,636
End of year	$ 332,040	$ 773,139	$ 441,099	$ 482,059

LINCOLN COUNTY, NEVADA
MAJOR FUND - GENERAL FUND
SCHEDULE OF REVENUES COMPARED TO BUDGET (BUDGETARY BASIS)
Year Ended June 30, 2018
(With Comparative Actual Amounts for Year Ended June 30, 2017)

	2018 Budget	2018 Actual	Variance - Positive (Negative)	2017 Actual
Revenues:				
Taxes:				
Property taxes	$ 2,180,803	$ 2,132,619	$ (48,184)	$ 2,184,932
Licenses and permits:				
Business licenses	7,200	10,325	3,125	9,870
Liquor licenses	5,100	6,047	947	7,425
Gaming licenses	5,200	2,912	(2,288)	4,688
Marriage licenses	650	588	(62)	378
Total licenses and permits	18,150	19,872	1,722	22,361
Intergovernmental:				
Gaming tax	141,000	134,621	(6,379)	140,389
Private car line tax	4,100	3,945	(155)	-
Water District	7,000	21,597	14,597	38,353
Consolidated tax	1,260,971	1,304,072	43,101	1,289,231
Grants	28,305	43,699	15,394	76,589
Marijuana fees	-	88,235	88,235	-
Fish and wildlife	-	2,555	2,555	3,139
Total intergovernmental	1,441,376	1,598,724	157,348	1,547,701
Charges for services:				
Clerk fees	6,000	11,254	5,254	11,641
Recorder fees	50,000	64,079	14,079	54,813
Assessor commissions	65,500	30,492	(35,008)	31,329
Sheriff fees	2,500	7,402	4,902	4,835
Tax penalties and costs	45,000	50,533	5,533	77,007
District attorney fees	500	156	(344)	171
Civil fees	-	3,096	3,096	3,122
Security contract	122,000	122,000	-	112,000
Caliente police contract	75,000	64,800	(10,200)	64,909
Caliente court contract	7,000	3,150	(3,850)	7,000
Total charges for services	373,500	356,962	(16,538)	366,827
Fines and forfeitures:				
Fines and forfeitures	360,000	293,668	(66,332)	283,706
Miscellaneous:				
Investment income	10,000	661	(9,339)	1,342
Rent, sales, refunds	40,000	46,812	6,812	35,521
Solid waste	4,000	-	(4,000)	283
Other	5,000	8,129	3,129	4,918
Total miscellaneous	59,000	55,602	(3,398)	42,064
Total revenues	$ 4,432,829	$ 4,457,447	$ 24,618	$ 4,447,591

LINCOLN COUNTY, NEVADA
MAJOR FUND - GENERAL FUND
SCHEDULE OF EXPENDITURES COMPARED TO BUDGET (BUDGETARY BASIS)
Year Ended June 30, 2018
(With Comparative Actual Amounts for Year Ended June 30, 2017)

	2018 Budget	2018 Actual	Variance - Positive (Negative)	2017 Actual
Expenditures:				
Current:				
General government:				
County commissioners:				
Salaries and wages	$ 132,721	$ 132,382	$ 339	$ 112,123
Employee benefits	81,948	89,735	(7,787)	65,246
Services and supplies	16,500	15,067	1,433	11,868
Total county commissioners	231,169	237,184	(6,015)	189,237
Executive officer:				
Salaries and wages	21,008	20,523	485	10,115
Employee benefits	11,755	11,574	181	5,606
Services and supplies	900	797	103	619
Total executive officer	33,663	32,894	769	16,340
Clerk:				
Salaries and wages	123,116	115,479	7,637	107,385
Employee benefits	50,754	50,139	615	47,103
Services and supplies	45,600	14,424	31,176	20,117
Total clerk	219,470	180,042	39,428	174,605
Treasurer:				
Salaries and wages	111,716	109,779	1,937	104,024
Employee benefits	48,681	48,253	428	46,469
Services and supplies	11,830	10,878	952	13,674
Total treasurer	172,227	168,910	3,317	164,167
Auditor and recorder:				
Salaries and wages	157,924	155,078	2,846	150,376
Employee benefits	67,574	66,821	753	64,211
Services and supplies	16,467	13,796	2,671	14,852
Total auditor and recorder	241,965	235,695	6,270	229,439
Assessor:				
Salaries and wages	144,284	142,348	1,936	140,914
Employee benefits	69,726	69,380	346	68,429
Services and supplies	23,000	12,396	10,604	14,524
Total assessor	237,010	224,124	12,886	223,867
Grant administrator:				
Salaries and wages	54,747	54,747	-	62,495
Employee benefits	19,469	19,478	(9)	24,401
Services and supplies	8,200	7,670	530	6,858
Total grant administrator	$ 82,416	$ 81,895	$ 521	$ 93,754

LINCOLN COUNTY, NEVADA
MAJOR FUND - GENERAL FUND
SCHEDULE OF EXPENDITURES COMPARED TO BUDGET (BUDGETARY BASIS)
Year Ended June 30, 2018
(With Comparative Actual Amounts for Year Ended June 30, 2017)

	2018 Budget	2018 Actual	Variance - Positive (Negative)	2017 Actual
General government (Continued):				
Business license:				
Salaries and wages	$ 5,105	$ 7,361	$ (2,256)	$ 5,921
Employee benefits	1,778	1,656	122	1,485
Services and supplies	1,500	1,266	234	714
Total business license	8,383	10,283	(1,900)	8,120
Buildings and grounds:				
Pioche:				
Salaries and wages	30,076	44,342	(14,266)	41,911
Employee benefits	8,439	8,808	(369)	9,553
Services and supplies	148,825	100,263	48,562	97,084
Total Pioche	187,340	153,413	33,927	148,548
Alamo:				
Salaries and wages	8,109	8,316	(207)	8,118
Employee benefits	854	884	(30)	863
Services and supplies	15,033	14,131	902	14,519
Total Alamo	23,996	23,331	665	23,500
Total buildings and grounds	211,336	176,744	34,592	172,048
Other general expenses:				
Employee benefits	56,000	51,229	4,771	67,616
Services and supplies	212,582	156,061	56,521	149,894
Total other general expenses	268,582	207,290	61,292	217,510
Total general government	$ 1,706,221	$ 1,555,061	$ 151,160	$ 1,489,087

LINCOLN COUNTY, NEVADA
MAJOR FUND - GENERAL FUND
SCHEDULE OF EXPENDITURES COMPARED TO BUDGET (BUDGETARY BASIS)
Year Ended June 30, 2018
(With Comparative Actual Amounts for Year Ended June 30, 2017)

	2018 Budget	2018 Actual	Variance - Positive (Negative)	2017 Actual
Public safety:				
Sheriff:				
Salaries and wages	$ 883,197	$ 830,042	$ 53,155	$ 827,894
Employee benefits	521,940	528,502	(6,562)	467,064
Services and supplies	194,269	170,678	23,591	155,130
Capital outlay	-	22,353	(22,353)	8,698
Total sheriff	1,599,406	1,551,575	47,831	1,458,786
Emergency management:				
Salaries and wages	34,050	35,148	(1,098)	32,677
Employee benefits	10,800	9,952	848	10,483
Services and supplies	5,100	-	5,100	2,396
Total emergency management	49,950	45,100	4,850	45,556
Caliente contract:				
Salaries and wages	87,306	78,323	8,983	76,023
Employee benefits	47,778	47,479	299	47,714
Services and supplies	4,600	1,405	3,195	2,041
Total Caliente contract	139,684	127,207	12,477	125,778
Total public safety	1,789,040	1,723,882	65,158	1,630,120
Judicial:				
District court:				
Salaries and wages	118,245	93,746	24,499	95,320
Services and supplies	292,300	292,195	105	193,552
Total district court	410,545	385,941	24,604	288,872
District attorney:				
Salaries and wages	243,770	240,539	3,231	229,890
Employee benefits	100,796	96,683	4,113	93,619
Services and supplies	50,000	43,967	6,033	22,676
Capital outlay	1,600	-	1,600	-
Total district attorney	$ 396,166	$ 381,189	$ 14,977	$ 346,185

LINCOLN COUNTY, NEVADA
MAJOR FUND - GENERAL FUND
SCHEDULE OF EXPENDITURES COMPARED TO BUDGET (BUDGETARY BASIS)
Year Ended June 30, 2018
(With Comparative Actual Amounts for Year Ended June 30, 2017)

	2018		Variance - Positive	2017
	Budget	Actual	(Negative)	Actual
Judicial (Continued):				
Law library	$ 12,100	$ 7,168	$ 4,932	$ 6,273
Public guardian	4,750	1,608	3,142	3,217
Public administrator	3,250	19	3,231	6,000
Juvenile officers:				
Salaries and wages	60,191	60,963	(772)	61,183
Employee benefits	32,639	31,404	1,235	32,009
Services and supplies	21,000	12,013	8,987	27,600
Total juvenile officers	113,830	104,380	9,450	120,792
Alamo:				
Salaries and wages	140,629	145,905	(5,276)	140,854
Employee benefits	65,468	63,307	2,161	64,550
Services and supplies	13,964	13,286	678	12,946
Total Alamo	220,061	222,498	(2,437)	218,350
Meadow Valley:				
Salaries and wages	113,051	110,410	2,641	108,358
Employee benefits	58,866	58,581	285	58,390
Services and supplies	14,800	10,742	4,058	13,740
Total Meadow Valley	186,717	179,733	6,984	180,488
Total judicial	1,347,419	1,282,536	64,883	1,170,177
Health:				
State nurse	42,640	52,388	(9,748)	42,784
Contingency	234,000	-	234,000	-
Total expenditures	$ 5,119,320	$ 4,613,867	$ 505,453	$ 4,332,168

LINCOLN COUNTY, NEVADA
MAJOR FUND - ROAD SPECIAL REVENUE FUND
COMPARATIVE BALANCE SHEETS
June 30, 2018 and 2017

	2018	2017
ASSETS		
Pooled cash and investments	$ 493,759	$ 518,727
Interest receivable	821	1,200
Due from other governments	296,386	295,207
Total assets	$ 790,966	$ 815,134
LIABILITIES		
Accounts payable	$ 109,070	$ 369,878
Accrued payroll and benefits	45,056	40,452
Total liabilities	154,126	410,330
FUND BALANCE		
Restricted	636,840	404,804
Total liabilities and fund balance	$ 790,966	$ 815,134

LINCOLN COUNTY, NEVADA
MAJOR FUND - ROAD SPECIAL REVENUE FUND
SCHEDULE OF REVENUES, EXPENDITURES, AND CHANGES IN FUND BALANCE - BUDGET (GAAP BASIS) AND ACTUAL
Year Ended June 30, 2018
(With Comparative Actual Amounts for Year Ended June 30, 2017)

	2018 Budget	2018 Actual	Variance - Positive (Negative)	2017 Actual
Revenues:				
Intergovernmental:				
Gasoline tax $2.35	$ 1,043,591	$ 1,043,384	$ (207)	$ 1,026,272
Gasoline tax $1.25	600,646	600,847	201	591,744
Gasoline tax $1.75	52,393	48,152	(4,241)	48,609
Optional $0.01 tax	25,444	23,344	(2,100)	23,418
National forest	-	21,230	21,230	406
Total intergovernmental	1,722,074	1,736,957	14,883	1,690,449
Miscellaneous:				
Investment income	800	170	(630)	918
Other	15,000	-	(15,000)	10,595
Total miscellaneous	15,800	170	(15,630)	11,513
Total revenues	1,737,874	1,737,127	(747)	1,701,962
Expenditures:				
Current:				
Public works:				
Highways and streets:				
Salaries and wages	679,844	659,012	20,832	631,936
Employee benefits	303,484	278,285	25,199	277,176
Services and supplies	801,700	465,294	336,406	434,003
Capital outlay	-	2,500	(2,500)	497,492
Total public works	1,785,028	1,405,091	379,937	1,840,607
Debt service:				
Principal	-	-	-	99,639
Interest	-	-	-	3,686
Total debt service	-	-	-	103,325
Total expenditures	1,785,028	1,405,091	379,937	1,943,932
Excess (deficiency) of revenues over expenditures	(47,154)	332,036	379,190	(241,970)
Other financing sources (uses):				
Operating transfers in	-	-	-	49,505
Operating transfers out	(100,000)	(100,000)	-	(100,000)
Total other financing sources	(100,000)	(100,000)	-	(50,495)
Net change in fund balance	(147,154)	232,036	379,190	(292,465)
Fund balance:				
Beginning of year	423,585	404,804	(18,781)	697,269
End of year	$ 276,431	$ 636,840	$ 360,409	$ 404,804

LINCOLN COUNTY, NEVADA
MAJOR FUND - FEDERAL IN LIEU TAX SPECIAL REVENUE FUND
COMPARATIVE BALANCE SHEETS
June 30, 2018 and 2017

	2018	2017
ASSETS		
Pooled cash and investments	$ 2,182,955	$ 2,698,802
Interest receivable	8,816	6,325
Due from other governments	57,609	-
Total assets	$ 2,249,380	$ 2,705,127
LIABILITIES		
Accounts payable	$ 165,588	$ 40,379
Unearned revenue	-	893,189
Total liabilities	165,588	933,568
FUND BALANCE		
Committed	2,083,792	1,771,559
Total liabilities and fund balance	$ 2,249,380	$ 2,705,127

LINCOLN COUNTY, NEVADA
MAJOR FUND - FEDERAL IN LIEU TAX SPECIAL REVENUE FUND
SCHEDULE OF REVENUES, EXPENDITURES, AND CHANGES
IN FUND BALANCE - BUDGET (GAAP BASIS) AND ACTUAL
Year Ended June 30, 2018
(With Comparative Actual Amounts for Year Ended June 30, 2017)

	2018		Variance - Positive	2017
	Budget	Actual	(Negative)	Actual
Revenues:				
Intergovernmental:				
Federal in lieu tax	$ 874,508	$ 1,804,715	$ 930,207	$ 874,508
Grants	57,609	57,609	-	-
Total intergovernmental	932,117	1,862,324	930,207	874,508
Miscellaneous:				
Investment income	5,000	1,826	(3,174)	4,337
Total revenues	937,117	1,864,150	927,033	878,845
Expenditures:				
Current:				
General government:				
Service and supplies	678,821	416,621	262,200	457,914
Capital outlay	202,609	310,024	(107,415)	16,719
Total general government	881,430	726,645	154,785	474,633
Public safety:				
Service and supplies	70,000	45,046	24,954	4,200
Sanitation:				
Capital outlay	126,000	-	126,000	-
Public works:				
Capital outlay	30,000	-	30,000	23,983
Community support:				
Service and supplies	16,957	16,957	-	16,957
Intergovernmental:				
Service and supplies	75,000	70,484	4,516	77,505
Debt service:				
Principal	47,699	47,699	-	45,377
Interest	4,890	4,877	13	7,199
Total debt service	52,589	52,576	13	52,576
Total expenditures	$ 1,251,976	$ 911,708	$ 340,268	$ 649,854

LINCOLN COUNTY, NEVADA
MAJOR FUND - FEDERAL IN LIEU TAX SPECIAL REVENUE FUND
SCHEDULE OF REVENUES, EXPENDITURES, AND CHANGES
IN FUND BALANCE - BUDGET (GAAP BASIS) AND ACTUAL
Year Ended June 30, 2018
(With Comparative Actual Amounts for Year Ended June 30, 2017)

	2018		Variance - Positive	2017
	Budget	Actual	(Negative)	Actual
Excess (deficiency) of revenues over expenditures	$ (314,859)	$ 952,442	$ 1,267,301	$ 228,991
Other financing sources (uses):				
Operating transfers out	(457,000)	(640,209)	(183,209)	(236,466)
Net change in fund balance	(771,859)	312,233	1,084,092	(7,475)
Fund balance:				
Beginning of year	1,483,477	1,771,559	288,082	1,779,034
End of year	$ 711,618	$ 2,083,792	$ 1,372,174	$ 1,771,559

LINCOLN COUNTY, NEVADA
MAJOR FUND - LINCOLN COUNTY WATER DISTRICT
WATER RESOURCES SPECIAL REVENUE FUND
COMPARATIVE BALANCE SHEETS
June 30, 2018 and 2017

	2018	2017
ASSETS		
Pooled cash and investments	$ 2,724,053	$ 2,832,741
Interest receivable	9,362	8,971
Total assets	$ 2,733,415	$ 2,841,712
LIABILITIES		
Accounts payable	$ -	$ -
FUND BALANCE		
Committed	2,733,415	2,841,712
Total liabilities and fund balance	$ 2,733,415	$ 2,841,712

LINCOLN COUNTY, NEVADA
MAJOR FUND - LINCOLN COUNTY WATER DISTRICT
WATER RESOURCES SPECIAL REVENUE FUND
SCHEDULE OF REVENUES, EXPENDITURES, AND CHANGES IN FUND BALANCE - BUDGET (GAAP BASIS) AND ACTUAL
Year Ended June 30, 2018
(With Comparative Actual Amounts for Year Ended June 30, 2017)

	2018 Budget	2018 Actual	Variance - Positive (Negative)	2017 Actual
Revenues:				
Miscellaneous:				
Investment income	$ 50,000	$ (8,297)	$ (58,297)	$ (27,634)
Expenditures:				
Current:				
General government:				
Services and supplies	-	-	-	-
Excess (deficiency) of revenues over expenditures	50,000	(8,297)	(58,297)	(27,634)
Other financing sources (uses):				
Operating transfers out	(100,000)	(100,000)	-	-
Net change in fund balance	(50,000)	(108,297)	(58,297)	(27,634)
Fund balance:				
Beginning of year	2,919,346	2,841,712	(77,634)	2,869,346
End of year	$ 2,869,346	$ 2,733,415	$ (135,931)	$ 2,841,712

LINCOLN COUNTY, NEVADA
MAJOR FUND - LINCOLN COUNTY LAND ACT - SPECIAL USE SPECIAL REVENUE FUND
COMPARATIVE BALANCE SHEETS
June 30, 2018 and 2017

	2018	2017
ASSETS		
Pooled cash and investments	$ 3,562,405	$ 3,518,883
Interest receivable	6,319	8,257
Interfund receivable	190,000	200,000
Total assets	$ 3,758,724	$ 3,727,140
LIABILITIES		
Accounts payable	$ -	$ -
FUND BALANCE		
Committed	3,758,724	3,727,140
Total liabilities and fund balance	$ 3,758,724	$ 3,727,140

LINCOLN COUNTY, NEVADA
MAJOR FUND - LINCOLN COUNTY LAND ACT - SPECIAL USE SPECIAL REVENUE FUND
SCHEDULE OF REVENUES, EXPENDITURES, AND CHANGES
IN FUND BALANCE - BUDGET (GAAP BASIS) AND ACTUAL
Year Ended June 30, 2018
(With Comparative Actual Amounts for Year Ended June 30, 2017)

	2018 Budget	2018 Actual	Variance - Positive (Negative)	2017 Actual
Revenues:				
Miscellaneous:				
Investment income	$ 300	$ 1,308	$ 1,008	$ 6,160
Rent	30,000	30,276	276	30,276
Total miscellaneous	30,300	31,584	1,284	36,436
Expenditures:				
Current:				
General government:				
Service and supplies	250,000	-	250,000	-
Excess (deficiency) of revenues over expenditures	(219,700)	31,584	251,284	36,436
Fund balance:				
Beginning of year	3,721,004	3,727,140	6,136	$ 3,690,704
End of year	$ 3,501,304	$ 3,758,724	$ 257,420	$ 3,727,140

LINCOLN COUNTY, NEVADA
MAJOR FUND - COUNTY GRANT SPECIAL REVENUE FUND
COMPARATIVE BALANCE SHEETS
June 30, 2018 and 2017

	2018	2017
ASSETS		
Pooled cash and investments	$ 102,369	$ 89,926
Interest receivable	561	213
Due from other governments	479,664	147,911
Due from others	-	30,152
Total assets	$ 582,594	$ 268,202
LIABILITIES		
Accounts payable	$ 338,719	$ 17,088
Accrued payroll and benefits	14,813	13,411
Unearned revenue	165,920	174,677
Total liabilities	519,452	205,176
FUND BALANCE		
Committed	63,142	63,026
Total liabilities and fund balance	$ 582,594	$ 268,202

LINCOLN COUNTY, NEVADA
MAJOR FUND - COUNTY GRANT SPECIAL REVENUE FUND
SCHEDULE OF REVENUES, EXPENDITURES, AND CHANGES IN FUND BALANCE - BUDGET (GAAP BASIS) AND ACTUAL
Year Ended June 30, 2018
(With Comparative Actual Amounts for Year Ended June 30, 2017)

	2018		Variance - Positive	2017
	Budget	Actual	(Negative)	Actual
Revenues:				
Intergovernmental:				
Grants	$ 2,838,202	$ 2,597,521	$ (240,681)	$ 1,260,950
Miscellaneous:				
Investment income	-	116	116	(2,143)
Total revenues	2,838,202	2,597,637	(240,565)	1,258,807
Expenditures:				
Current:				
General government	448,384	418,792	29,592	347,467
Public safety	347,712	327,447	20,265	282,504
Public works	1,270,985	1,268,488	2,497	18,392
Welfare	140,025	100,949	39,076	95,727
Culture and recreation	631,096	560,607	70,489	29,468
Intergovernmental	-	-	-	490,433
Total expenditures	2,838,202	2,676,283	161,919	1,263,991
Excess (deficiency) of revenues over expenditures	-	(78,646)	(78,646)	(5,184)
Other financing sources (uses):				
Operating transfers in	-	78,762	78,762	3,041
Net change in fund balance	-	116	116	(2,143)
Fund balance:				
Beginning of year	65,169	63,026	(2,143)	65,169
End of year	$ 65,169	$ 63,142	$ (2,027)	$ 63,026

LINCOLN COUNTY, NEVADA
MAJOR FUND - DETENTION CENTER ENTERPRISE FUND
STATEMENT OF NET POSITION
JUNE 30, 2018 and 2017

	2018	2017
ASSETS		
Current assets:		
Pooled cash and investments	$ -	$ 60,134
Accounts receivable	318,676	185,589
Total current assets	318,676	245,723
Capital assets:		
Property, plant and equipment (net of depreciation)	876,813	898,411
Total assets	1,195,489	1,144,134
DEFERRED OUTFLOWS OF RESOURCES		
Deferred pension charge	427,920	710,502
LIABILITIES		
Current liabilities:		
Accounts payable	25,541	49,043
Accrued payroll and benefits	123,811	69,454
Due to other funds	89,535	-
Accrued compensated absences	120,471	128,443
Total current liabilities	359,358	246,940
Non-current liabilities:		
Accrued compensated absences	72,283	67,270
Net pension liability	3,236,339	3,409,932
Total non-current liabilities	3,308,622	3,477,202
Total liabilities	3,667,980	3,724,142
DEFERRED INFLOWS OF RESOURCES		
Deferred pension charge	315,194	260,416
NET POSITION		
Invested in capital assets, net of related debt	876,813	898,411
Unrestricted	(3,236,578)	(3,028,333)
Total net position	$ (2,359,765)	$ (2,129,922)

LINCOLN COUNTY, NEVADA
MAJOR FUND - DETENTION CENTER ENTERPRISE FUND
SCHEDULE OF REVENUES, EXPENSES, AND CHANGES IN NET POSITION -
BUDGET (GAAP BASIS) AND ACTUAL
Year Ended June 30, 2018
(With Comparative Actual Amounts for Year Ended June 30, 2017)

	2018 Budget	2018 Actual	Variance - Positive (Negative)	2017 Actual
Revenues:				
Charges for services:				
Inmate fees	$ 1,779,375	$ 1,875,382	$ 96,007	$ 934,609
Operating expenses:				
Public safety:				
Salaries and wages	982,775	1,002,794	(20,019)	1,086,461
Employee benefits	546,200	600,602	(54,402)	666,874
Services and supplies	258,500	345,908	(87,408)	262,662
Depreciation	65,000	43,418	21,582	47,519
Total operating expenses	1,852,475	1,992,722	(140,247)	2,063,516
Operating income (loss)	(73,100)	(117,340)	(44,240)	(1,128,907)
Non-operating revenues (expenses):				
Transfer in	-	21,820	21,820	-
Changes in net position	$ (73,100)	(95,520)	$ (22,420)	(1,128,907)
Net position:				
Beginning of year		(2,129,922)		(1,001,015)
Restatement per GASB 75		(134,323)		-
Beginning balance as restated		(2,264,245)		(1,001,015)
End of year		$ (2,359,765)		$ (2,129,922)

LINCOLN COUNTY, NEVADA
MAJOR FUND - DETENTION CENTER ENTERPRISE FUND
COMPARATIVE STATEMENT OF CASH FLOWS
June 30, 2018 and 2017

	2018	2017
Cash flows from operating activities:		
Cash received from customers	$ 1,742,295	$ 1,165,270
Cash paid for services and supplies	(369,410)	(234,002)
Cash paid for salaries and benefits	(1,522,554)	(1,630,354)
Net cash provided (used) by operating activities	(149,669)	(699,086)
Cash flows from noncapital financing activities:		
Due to other funds	89,535	-
Operating transfers in	21,820	-
Net cash provided (used) by noncapital financing activities	111,355	-
Cash flows from capital and related financing activities:		
Purchases of capital assets	(21,820)	(44,669)
Net change in cash and cash equivalents	(60,134)	(743,755)
Cash:		
Beginning of year	60,134	803,889
End of year	$ -	$ 60,134
Reconciliation of operating income (loss) to net cash provided (used) by operating activities:		
Operating income (loss)	$ (117,340)	$ (1,128,907)
Adjustments to reconcile operating income (loss) to net cash provided (used) by operating activities:		
Depreciation expense	43,418	47,519
(Increase) decrease in accounts receivables	(133,087)	230,661
Increase (decrease) in accounts payable	(23,502)	28,660
Increase (decrease) in accrued payroll and benefits	54,357	(5,640)
Increase (decrease) in compensated absences	(2,959)	33,376
Increase (decrease) in net pension liability	(173,593)	464,475
Increase (decrease) in net pension expense	203,037	(369,230)
Total adjustments	(32,329)	429,821
Net cash provided (used) by operating activities	$ (149,669)	$ (699,086)

LINCOLN COUNTY, NEVADA
MAJOR PIOCHE PUBLIC UTILITY ELECTRIC ENTERPRISE FUND
COMPARATIVE STATEMENT OF NET POSITION
June 30, 2018 and 2017

	2018	2017
ASSETS		
Current assets:		
Pooled cash and investments	$ 295,950	$ 208,182
Accounts receivable	49,744	60,760
Interest receivable	165	107
Total current assets	345,859	269,049
Capital assets:		
Land	2,000	2,000
Property, plant and equipment (net of depreciation)	174,285	196,133
Total capital assets	176,285	198,133
Total assets	522,144	467,182
DEFERRED OUTFLOWS OF RESOURCES		
Deferred pension charge	21,064	30,866
Deferred OPEB	1,762	-
Total deferred outflows of resources	22,826	30,866
LIABILITIES		
Current liabilities:		
Accounts payable	43,708	50,356
Accrued payroll and benefits	5,490	5,047
Customer deposits	6,610	4,330
Accrued compensated absences	7,014	7,248
Total current liabilities	62,822	66,981
Non-current liabilities:		
Accrued compensated absences	4,347	4,633
Net pension liability	131,611	138,607
OPEB liability	30,930	-
Total non-current liabilities	166,888	143,240
Total liabilities	229,710	210,221
DEFERRED INFLOWS OF RESOURCES		
Deferred pension charge	15,302	10,125
NET POSITION		
Invested in capital assets, net of related debt	176,285	198,133
Unrestricted	123,673	79,569
Total net position	$ 299,958	$ 277,702

LINCOLN COUNTY, NEVADA
MAJOR PIOCHE PUBLIC UTILITY ELECTRIC ENTERPRISE FUND
SCHEDULE OF REVENUES, EXPENSES, AND CHANGES IN NET POSITION - BUDGET (GAAP BASIS) AND ACTUAL
Year Ended June 30, 2018
(With Comparative Actual Amounts for Year Ended June 30, 2017)

	2018 Budget	2018 Actual	Variance-Positive (Negative)	2017 Actual
Operating revenues:				
Electricity	$ 702,000	$ 693,380	$ (8,620)	$ 675,462
Operating expenses:				
Electricity:				
Salaries and wages	119,025	65,173	53,852	90,452
Employee benefits	42,875	32,421	10,454	41,781
Services and supplies	568,801	587,871	(19,070)	580,877
Depreciation	25,000	21,848	3,152	36,948
Total operating expenses	755,701	707,313	48,388	750,058
Operating income (loss)	(53,701)	(13,933)	39,768	(74,596)
Non-operating revenues (expenses):				
Investment income	50	34	(16)	(118)
Electricity capital fees	60,000	57,123	(2,877)	61,899
Electricity custom fees	5,000	14,478	9,478	7,182
Total non-operating revenues (expenses)	65,050	71,635	6,585	68,963
Change in net position	$ 11,349	57,702	$ 46,353	(5,633)
Net Position:				
Beginning of year		277,702		283,335
Restatement per GASB 75		(35,446)		-
Beginning balance as restated		242,256		283,335
End of year		$ 299,958		$ 277,702

LINCOLN COUNTY, NEVADA
MAJOR PIOCHE PUBLIC UTILITY ELECTRIC ENTERPRISE FUND
COMPARATIVE STATEMENT OF CASH FLOWS
June 30, 2018 and 2017

	2018	2017
Cash flows from operating activities:		
Cash received from customers	$ 706,676	$ 665,534
Cash paid for services and supplies	(594,519)	(568,767)
Cash paid for salaries and benefits	(95,966)	(130,065)
Net cash provided (used) by operating activities	16,191	(33,298)
Cash flows from capital and related financing activities:		
Purchases of capital assets	-	(41,521)
Capital fees	57,123	61,899
Custom fees	14,478	7,182
Net cash provided (used) by capital and related financing activities	71,601	27,560
Cash flows from investing activities:		
Investment income	(24)	(141)
Net change in cash and cash equivalents	87,768	(5,879)
Cash:		
Beginning of year	208,182	214,061
End of year	$ 295,950	$ 208,182
Reconciliation of operating income (loss) to net cash provided (used) by operating activities:		
Operating income (loss)	$ (13,933)	$ (74,596)
Adjustments to reconcile operating income (loss) to net cash provided (used) by operating activities:		
Depreciation expense	21,848	36,948
(Increase) decrease in accounts receivable	11,016	(11,768)
Increase (decrease) in accounts payable	(6,648)	12,110
Increase (decrease) in accrued payroll and benefits	443	(165)
Increase (decrease) in compensated absences	(520)	(135)
Increase (decrease) in net pension liability	(6,996)	18,057
Increase (decrease) in net pension expense	8,136	(15,589)
Increase (decrease) in OPEB liability	30,930	-
Increase (decrease) in OPEB pension expense	(30,365)	-
Increase (decrease) in customer deposits	2,280	1,840
Total adjustments	30,124	41,298
Net cash provided (used) by operating activities	$ 16,191	$ (33,298)

LINCOLN COUNTY, NEVADA
MAJOR SOLID WASTE ENTERPRISE FUND
STATEMENT OF NET POSITION
June 30, 2018

	2018	2017
ASSETS		
Current assets:		
Pooled cash and investments	$ 446,861	$ 362,904
Accounts receivable	144,690	284
Interest receivable	72	47
Restricted assets:		
Pooled cash and investments	40,005	20,015
Capital assets:		
Land	200,000	200,000
Property and equipment (net of depreciation)	405,108	240,636
Total assets	1,236,736	823,886
DEFERRED OUTFLOWS OF RESOURCES		
Deferred pension charge	31,966	42,216
LIABILITIES		
Current liabilities:		
Accounts payable	17,397	14,602
Accrued payroll and benefits	15,410	14,366
Accrued compensated absences	11,432	-
Interfund payable	20,000	20,000
Total current liabilities	64,239	48,968
Non-current liabilities:		
Landfill closure and postclosure costs	40,000	20,000
Interfund payable	360,000	380,000
Accrued compensated absences	7,621	-
Net pension liability	472	10,736
Total non-current liabilities	408,093	410,736
Total liabilities	472,332	459,704
DEFERRED INFLOWS OF RESOURCES		
Deferred pension charge	18,877	15,363
NET POSITION		
Invested in capital assets, net of related debt	605,108	440,636
Unrestricted	172,385	(49,601)
Total net position	$ 777,493	$ 391,035

LINCOLN COUNTY, NEVADA
MAJOR SOLID WASTE ENTERPRISE FUND
SCHEDULE OF REVENUES, EXPENSES, AND CHANGES IN NET POSITION - BUDGET (GAAP BASIS) AND ACTUAL
Year Ended June 30, 2018

	2018 Budget	2018 Actual	Variance-Positive (Negative)	2017 Actual
Operating revenues:				
Charges for services	$ 624,184	$ 766,005	$ 141,821	$ 356,546
Operating expenses:				
Sanitation:				
Salaries and wages	220,901	240,459	(19,558)	151,819
Employee benefits	90,928	83,871	7,057	39,437
Service and supplies	220,500	120,382	100,118	328,264
Closure and postclosure landfill costs	-	20,000	(20,000)	20,000
Bad debt expense	-	40,000	(40,000)	-
Depreciation	20,000	41,926	(21,926)	28,387
Total operating expenses	552,329	546,638	5,691	567,907
Operating income (loss)	71,855	219,367	147,512	(211,361)
Non-operating revenues (expenses):				
Investment income	-	15	15	63
Operating transfers in	60,000	175,151	115,151	602,933
Operating transfers out	-	-	-	(600)
Total non-operating revenues (expenses)	60,000	175,166	115,166	602,396
Change in net position	$ 131,855	394,533	262,678	391,035
Net Position:				
Beginning of year		391,035		-
Restatement per GASB 75		(8,075)		
Beginning balance as restated		382,960		
End of year		$ 777,493		$ 391,035

LINCOLN COUNTY, NEVADA
MAJOR SOLID WASTE ENTERPRISE FUND
STATEMENT OF CASH FLOWS
Year Ended June 30, 2018

	2018	2017
Cash flows from operating activities:		
Cash received from customers	$ 581,599	$ 356,262
Cash paid for services and supplies	(117,587)	(313,662)
Cash paid for salaries and benefits	(308,808)	(193,007)
Net cash provided (used) by operating activities	155,204	(150,407)
Cash flows from noncapital financing activities:		
Operating transfers in/out	175,151	602,333
Cash flows from capital and related financing activities:		
Purchases of capital assets	(206,398)	(469,023)
Interfund payable	(20,000)	-
Loan proceeds	-	400,000
Net cash provided by investing activities	(226,398)	(69,023)
Cash flows from investing activities:		
Investment income	(10)	16
Net change in cash and cash equivalents	103,947	382,919
Cash:		
Beginning of year	382,919	-
End of year	$ 486,866	$ 382,919
Reconciliation of operating income to net cash provided (used) by operating activities:		
Operating income (loss)	$ 219,367	$ (211,361)
Adjustments to reconcile operating income to net cash provided (used) by operating activities:		
Depreciation expense	41,926	28,387
Bad debt expense	40,000	-
(Increase) decrease in accounts receivable	(184,406)	(284)
Increase (decrease) in accounts payable	2,795	34,602
Increase (decrease) in accrued payroll and benefits	1,044	14,366
Increase (decrease) in compensated absences	19,053	-
Increase (decrease) in land fill closure	20,000	
Increase (decrease) in net pension liability	(10,264)	10,736
Increase (decrease) in net pension expense	5,689	(26,853)
Total adjustments	(64,163)	60,954
Net cash provided (used) by operating activities	$ 155,204	$ (150,407)

LINCOLN COUNTY, NEVADA
NONMAJOR SPECIAL REVENUE FUNDS
COMBINING BALANCE SHEET
June 30, 2018
(With Comparative Totals for June 30, 2017)

	Pioche Town	Alamo Town	Panaca Town	Resource Development Authority	County Library
ASSETS					
Pooled cash and investments	$ 135,602	$ 69,175	$ 8,638	$ 86,329	$ 57,226
Interest receivable	243	125	13	-	-
Taxes receivable	2,109	686	279	-	1,397
Due from other governments	9,343	3,884	7,040	-	93
Due from others	-	-	-	-	-
Prepaid expense	-	-	-	-	-
Interfund receivable	-	-	-	-	-
Total assets	$ 147,297	$ 73,870	$ 15,970	$ 86,329	$ 58,716
LIABILITIES					
Accounts payable	$ 3,326	$ 3,381	$ 2,395	$ 2,455	$ 3,671
Accrued payroll and benefits	5,406	1,070	202	-	2,905
Unearned revenue	-	-	-	83,874	-
Total liabilities	8,732	4,451	2,597	86,329	6,576
DEFERRED INFLOWS OF RESOURCES					
Unavailable revenue - property taxes	2,019	283	208	-	1,153
FUND BALANCE					
Nonspendable	-	-	-	-	-
Restricted for:					
Unincorporated towns	136,546	69,136	13,165	-	-
Multi-species conservation	-	-	-	-	-
General government	-	-	-	-	-
Public safety	-	-	-	-	-
Judicial	-	-	-	-	-
Public works	-	-	-	-	-
Health	-	-	-	-	-
Welfare	-	-	-	-	-
Culture and recreation	-	-	-	-	50,987
Community support	-	-	-	-	-
Intergovernmental	-	-	-	-	-
Committed for:					
Land act	-	-	-	-	-
Water	-	-	-	-	-
Lincoln County Water District	-	-	-	-	-
General government	-	-	-	-	-
Public works	-	-	-	-	-
Health	-	-	-	-	-
Unassigned	-	-	-	-	-
Total fund balance	136,546	69,136	13,165	-	50,987
Total liabilities, deferred inflows of resources, and fund balance	$ 147,297	$ 73,870	$ 15,970	$ 86,329	$ 58,716

Museum	Senior Nutrition	Transportation	Agricultural Extension	Indigent	Medical Indigent
$ 60,377	$ 95,320	$ 160,894	$ 29,491	$ 371,512	$ 436,522
-	-	-	-	-	773
712	1,718	-	334	1,198	2,672
46	112	8,517	22	78	175
-	1,679	-	-	-	-
-	-	-	-	-	-
-	-	-	-	-	-
$ 61,135	$ 98,829	$ 169,411	$ 29,847	$ 372,788	$ 440,142
$ 402	$ 16,438	$ 3,014	$ 3,470	$ 993	$ 77,007
2,794	7,420	3,908	662	2,860	-
-	38,551	-	-	-	-
3,196	62,409	6,922	4,132	3,853	77,007
587	1,410	-	274	983	2,192
-	-	-	-	-	-
-	-	-	-	-	-
-	-	-	-	-	-
-	-	-	-	-	-
-	-	-	-	-	-
-	-	-	-	-	-
-	-	-	-	-	-
-	35,010	-	-	367,952	360,943
57,352	-	-	-	-	-
-	-	162,489	25,441	-	-
-	-	-	-	-	-
-	-	-	-	-	-
-	-	-	-	-	-
-	-	-	-	-	-
-	-	-	-	-	-
-	-	-	-	-	-
-	-	-	-	-	-
-	-	-	-	-	-
57,352	35,010	162,489	25,441	367,952	360,943
$ 61,135	$ 98,829	$ 169,411	$ 29,847	$ 372,788	$ 440,142

LINCOLN COUNTY, NEVADA
NONMAJOR SPECIAL REVENUE FUNDS
COMBINING BALANCE SHEET
June 30, 2018
(With Comparative Totals for June 30, 2017)

	China Springs	Ambulance	Regional Streets and Highways	Room Tax	Legal Aid Services
ASSETS					
Pooled cash and investments	$ 1,069	$ 15,363	$ 590,718	$ 75,814	$ 10,630
Interest receivable	-	16	2,865	-	-
Taxes receivable	140	-	-	6,456	-
Due from other governments	10	-	20,963	-	-
Due from others	-	-	-	-	-
Prepaid expense	-	-	-	-	-
Interfund receivable	-	-	-	-	-
Total assets	$ 1,219	$ 15,379	$ 614,546	$ 82,270	$ 10,630
LIABILITIES					
Accounts payable	$ -	$ 3,996	$ 12,705	$ 2,012	$ -
Accrued payroll and benefits	-	1,930	-	447	-
Unearned revenue	-	-	-	-	-
Total liabilities	-	5,926	12,705	2,459	-
DEFERRED INFLOWS OF RESOURCES					
Unavailable revenue - property taxes	115	-	-	-	-
FUND BALANCE					
Nonspendable	-	-	-	-	-
Restricted for:					
Unincorporated towns	-	-	-	-	-
Multi-species conservation	-	-	-	-	-
General government	-	-	-	-	-
Public safety	-	-	-	-	-
Judicial	-	-	-	-	10,630
Public works	-	-	601,841	-	-
Health	-	-	-	-	-
Welfare	-	-	-	-	-
Culture and recreation	-	-	-	79,811	-
Community support	-	-	-	-	-
Intergovernmental	1,104	-	-	-	-
Committed for:					
Land act	-	-	-	-	-
Water	-	-	-	-	-
Lincoln County Water District	-	-	-	-	-
General government	-	-	-	-	-
Public works	-	-	-	-	-
Health	-	9,453	-	-	-
Unassigned	-	-	-	-	-
Total fund balance	1,104	9,453	601,841	79,811	10,630
Total liabilities, deferred inflows of resources, and fund balance	$ 1,219	$ 15,379	$ 614,546	$ 82,270	$ 10,630

Forensic Services	Administrative Assessment	Forfeiture	Recorder Technology	L. C. Housing Authority
$ 8,035	$ 89,792	$ 48,458	$ 15,994	$ 33,149
-	158	88	29	56
-	-	-	-	-
-	-	9,974	-	-
-	-	-	-	-
-	-	-	-	-
-	-	-	-	-
$ 8,035	$ 89,950	$ 58,520	$ 16,023	$ 33,205
$ 275	$ 7,000	$ -	$ -	$ 1,058
-	-	-	-	284
-	-	-	-	-
275	7,000	-	-	1,342
-	-	-	-	-
-	-	-	-	-
-	-	-	-	-
-	-	-	-	-
-	-	-	16,023	-
7,760	-	58,520	-	-
-	82,950	-	-	-
-	-	-	-	-
-	-	-	-	-
-	-	-	-	-
-	-	-	-	-
-	-	-	-	31,863
-	-	-	-	-
-	-	-	-	-
-	-	-	-	-
-	-	-	-	-
-	-	-	-	-
-	-	-	-	-
-	-	-	-	-
-	-	-	-	-
7,760	82,950	58,520	16,023	31,863
$ 8,035	$ 89,950	$ 58,520	$ 16,023	$ 33,205

LINCOLN COUNTY, NEVADA
NONMAJOR SPECIAL REVENUE FUNDS
COMBINING BALANCE SHEET
June 30, 2018
(With Comparative Totals for June 30, 2017)

	Alamo Clinic	Fair Board	Multi-Species Habitat Conservation	Multi-Species Habitat Conservation Section 7	Youth Activities Counsel
ASSETS					
Pooled cash and investments	$ 233	$ 20,161	$ 21,105	$ 861,358	$ 6,007
Interest receivable	-	34	40	1,523	-
Taxes receivable	1,418	-	-	-	-
Due from other governments	92	100	-	-	-
Due from others	-	-	-	-	-
Prepaid expense	-	-	-	-	-
Interfund receivable	-	-	-	-	-
Total assets	$ 1,743	$ 20,295	$ 21,145	$ 862,881	$ 6,007
LIABILITIES					
Accounts payable	$ 326	$ 177	$ -	$ -	$ -
Accrued payroll and benefits	-	-	-	-	-
Unearned revenue	-	-	21,145	-	-
Total liabilities	326	177	21,145	-	-
DEFERRED INFLOWS OF RESOURCES					
Unavailable revenue - property taxes	1,164	-	-	-	-
FUND BALANCE					
Nonspendable	-	-	-	-	-
Restricted for:					
Unincorporated towns	-	-	-	-	-
Multi-species conservation	-	-	-	862,881	-
General government	-	-	-	-	-
Public safety	-	-	-	-	-
Judicial	-	-	-	-	-
Public works	-	-	-	-	-
Health	253	-	-	-	-
Welfare	-	-	-	-	-
Culture and recreation	-	20,118	-	-	-
Community support	-	-	-	-	6,007
Intergovernmental	-	-	-	-	-
Committed for:					
Land act	-	-	-	-	-
Water	-	-	-	-	-
Lincoln County Water District	-	-	-	-	-
General government	-	-	-	-	-
Public works	-	-	-	-	-
Health	-	-	-	-	-
Unassigned	-	-	-	-	-
Total fund balance	253	20,118	-	862,881	6,007
Total liabilities, deferred inflows of resources, and fund balance	$ 1,743	$ 20,295	$ 21,145	$ 862,881	$ 6,007

Genetic Marker Testing	Public Improvement	Airport	Panaca Town Building	Court Facility Fees	Tri County Weed Control
$ 3,192	$ 142,335	$ 259	$ 44,706	$ 71,427	$ 249,375
-	254	-	82	113	399
-	-	-	-	-	-
-	-	120	-	-	-
-	-	-	-	-	-
-	-	-	-	-	-
-	-	-	-	-	-
$ 3,192	$ 142,589	$ 379	$ 44,788	$ 71,540	$ 249,774
$ 1,850	$ -	$ 648	$ -	$ 2,500	$ 26,503
-	-	-	-	-	32,433
-	-	-	-	-	-
1,850	-	648	-	2,500	58,936
-	-	-	-	-	-
-	-	-	-	-	-
-	-	-	-	-	-
-	-	-	-	-	-
1,342	-	-	-	-	190,838
-	-	-	-	-	-
-	-	-	-	69,040	-
-	142,589	-	-	-	-
-	-	-	-	-	-
-	-	-	-	-	-
-	-	-	-	-	-
-	-	-	-	-	-
-	-	-	-	-	-
-	-	-	-	-	-
-	-	-	-	-	-
-	-	-	44,788	-	-
-	-	-	-	-	-
-	-	-	-	-	-
-	-	(269)	-	-	-
1,342	142,589	(269)	44,788	69,040	190,838
$ 3,192	$ 142,589	$ 379	$ 44,788	$ 71,540	$ 249,774

LINCOLN COUNTY, NEVADA
NONMAJOR SPECIAL REVENUE FUNDS
COMBINING BALANCE SHEET
June 30, 2018
(With Comparative Totals for June 30, 2017)

	Lincoln County Land Act General	Lincoln County Land Act Planning and Development	Lincoln County Land Act Education	Lincoln County Land Act Grant Match	Lincoln County Water General
ASSETS					
Pooled cash and investments	$ 6,566	$ 668	$ 124,582	$ 151	$ 604
Interest receivable	9	-	219	-	4
Taxes receivable	-	-	-	-	-
Due from other governments	-	-	-	-	-
Due from others	-	-	-	-	-
Prepaid expense	-	-	-	-	-
Interfund receivable	-	-	-	-	-
Total assets	$ 6,575	$ 668	$ 124,801	$ 151	$ 608
LIABILITIES					
Accounts payable	$ -	$ -	$ -	$ -	$ -
Accrued payroll and benefits	-	-	-	-	-
Unearned revenue	-	-	-	-	-
Total liabilities	-	-	-	-	-
DEFERRED INFLOWS OF RESOURCES					
Unavailable revenue - property taxes	-	-	-	-	-
FUND BALANCE					
Nonspendable	-	-	-	-	-
Restricted for:					
Unincorporated towns	-	-	-	-	-
Multi-species conservation	-	-	-	-	-
General government	-	-	-	-	-
Public safety	-	-	-	-	-
Judicial	-	-	-	-	-
Public works	-	-	-	-	-
Health	-	-	-	-	-
Welfare	-	-	-	-	-
Culture and recreation	-	-	-	-	-
Community support	-	-	-	-	-
Intergovernmental	-	-	-	-	-
Committed for:					
Land act	6,575	668	124,801	151	-
Water	-	-	-	-	608
Lincoln County Water District	-	-	-	-	-
General government	-	-	-	-	-
Public works	-	-	-	-	-
Health	-	-	-	-	-
Unassigned	-	-	-	-	-
Total fund balance	6,575	668	124,801	151	608
Total liabilities, deferred inflows of resources, and fund balance	$ 6,575	$ 668	$ 124,801	$ 151	$ 608

Lincoln County Water Special Projects	Lincoln County Water Planning and Development	Lincoln County Water Special Use	Lincoln County Water Grant Match	Lincoln County Water District General	Lincoln County Water District Plan & Dev
$ 8,384	$ 83,166	$ 1,163,802	$ 83,104	$ 433,593	$ 882,957
14	148	2,064	149	820	3,051
-	-	-	-	-	-
-	-	-	-	-	-
-	-	-	-	-	-
-	-	-	-	-	
-	-	190,000	-	-	-
$ 8,398	$ 83,314	$ 1,355,866	$ 83,253	$ 434,413	$ 886,008
$ -	$ -	$ -	$ -	$ 2,164	$ 9,225
-	-	-	-	5,800	-
-	-	-	-	-	-
-	-	-	-	7,964	9,225
-	-	-	-	-	-
-	-	-	-	-	-
				-	-
-	-	-	-	-	-
-	-	-	-	-	-
-	-	-	-	-	-
-	-	-	-	-	-
-	-	-	-	-	-
-	-	-	-	-	-
-	-	-	-	-	-
-	-	-	-	-	-
-	-	-	-	-	-
-	-	-	-	-	-
-	-	-	-	-	-
-	-	-	-	-	-
8,398	83,314	1,355,866	83,253	426,449	876,783
-	-	-	-	-	-
-	-	-	-	-	-
-	-	-	-	-	-
-	-	-	-	-	-
-	-	-	-		
8,398	83,314	1,355,866	83,253	426,449	876,783
$ 8,398	$ 83,314	$ 1,355,866	$ 83,253	$ 434,413	$ 886,008

LINCOLN COUNTY, NEVADA
NONMAJOR SPECIAL REVENUE FUNDS
COMBINING BALANCE SHEET
30-Jun-18
(With Comparative Totals for June 30, 2017)

	Lincoln County Water District Special Proj.	Assessor Technology	District Court Technology	District Court Specialty Court	Court Security
ASSETS					
Pooled cash and investments	$ 643,796	$ 44,605	$ 5,120	$ 12,248	$ 9,690
Interest receivable	2,162	-	-	-	17
Taxes receivable	-	-	-	-	-
Due from other governments	-	-	-	-	-
Due from others	-	-	-	-	-
Prepaid expense	48,000	-	-	-	-
Interfund receivable	-	-	-	-	-
Total assets	$ 693,958	$ 44,605	$ 5,120	$ 12,248	$ 9,707
LIABILITIES					
Accounts payable	$ -	$ -	$ -	$ 2,272	$ -
Accrued payroll and benefits	-	-	-	-	-
Unearned revenue	-	-	-	-	-
Total liabilities	-	-	-	2,272	-
DEFERRED INFLOWS OF RESOURCES					
Unavailable revenue - property taxes	-	-	-	-	-
FUND BALANCE					
Nonspendable	48,000	-	-	-	-
Restricted for:					
Unincorporated towns	-	-	-	-	-
Multi-species conservation	-	-	-	-	-
General government	-	44,605	-	-	-
Public safety	-	-	-	-	-
Judicial	-	-	5,120	9,976	9,707
Public works	-	-	-	-	-
Health	-	-	-	-	-
Welfare	-	-	-	-	-
Culture and recreation	-	-	-	-	-
Community support	-	-	-	-	-
Intergovernmental	-	-	-	-	-
Committed for:					
Land act	-	-	-	-	-
Water	-	-	-	-	-
Lincoln County Water District	645,958	-	-	-	-
General government	-	-	-	-	-
Public works	-	-	-	-	-
Health	-	-	-	-	-
Unassigned	-	-	-	-	-
Total fund balance	693,958	44,605	5,120	9,976	9,707
Total liabilities, deferred inflows of resources, and fund balance	$ 693,958	$ 44,605	$ 5,120	$ 12,248	$ 9,707

District Court Enrichment	Nuclear Waste	Property Management	Totals 2018	Totals 2017
$ 43,591	$ 2,099	$ 59,808	$ 7,428,800	$ 7,447,784
78	3	-	15,549	15,643
-	-	-	19,119	17,217
-	-	-	60,569	81,362
-	-	-	1,679	1,953
-	-	-	48,000	56,000
-	-	-	190,000	200,000
$ 43,669	$ 2,102	$ 59,808	$ 7,763,716	$ 7,819,959
$ -	$ 1,100	$ 3,874	$ 194,237	$ 175,897
-	-	676	68,797	63,542
-	1,002	-	144,572	128,302
-	2,102	4,550	407,606	367,741
-	-	-	10,388	10,532
-	-	-	48,000	56,000
-	-	-	218,847	172,659
-	-	-	862,881	862,566
-	-	-	252,808	259,890
-	-	-	66,280	58,882
43,669	-	-	231,092	312,097
-	-	-	744,430	796,146
-	-	-	253	597
-	-	-	763,905	731,762
-	-	-	208,268	217,327
-	-	-	225,800	179,307
-	-	-	1,104	1,108
-	-	-	132,195	132,147
-	-	-	2,834,671	1,530,948
-	-	-	645,958	2,031,240
-	-	55,258	100,046	82,953
-	-	-	-	26
-	-	-	9,453	16,031
-	-	-	(269)	-
43,669	-	55,258	7,345,722	7,441,686
$ 43,669	$ 2,102	$ 59,808	$ 7,763,716	$ 7,819,959

LINCOLN COUNTY, NEVADA
NONMAJOR SPECIAL REVENUE FUNDS
COMBINING SCHEDULE OF REVENUES, EXPENDITURES,
AND CHANGES IN FUND BALANCES
Year Ended June 30, 2018
(With Comparative Totals for Year Ended June 30, 2017)

	Pioche Town	Alamo Town	Panaca Town	Resource Development Authority	County Library
Revenues:					
Taxes	$ 52,012	$ 53,723	$ 11,415	$ -	$ 91,183
Licenses and permits	3,028	-	-	-	-
Intergovernmental	53,356	22,132	40,104	62,354	265
Charges for services	-	-	-	-	-
Fines and forfeitures	-	-	-	-	-
Miscellaneous	7,384	5,187	3	1,300	40
Total revenues	115,780	81,042	51,522	63,654	91,488
Expenditures:					
General government	7,931	25,382	2,672	-	-
Public safety	-	-	-	-	-
Judicial	-	-	-	-	-
Public works	29,587	2,161	15,235	-	-
Health	3,740	-	11,081	-	-
Welfare	-	-	-	-	-
Culture and recreation	54,835	30,675	18,857	-	106,333
Community support	-	-	-	73,654	-
Intergovernmental	-	-	-	-	-
Total expenditures	96,093	58,218	47,845	73,654	106,333
Excess (deficiency) of revenues over expenditures	19,687	22,824	3,677	(10,000)	(14,845)
Other financing sources (uses):					
Operating transfers in	-	-	-	10,000	-
Operating transfers out	-	-	-	-	(4,000)
Total other financing sources (uses)	-	-	-	10,000	(4,000)
Net change in fund balance	19,687	22,824	3,677	-	(18,845)
Fund balance:					
Beginning of year	116,859	46,312	9,488	-	69,832
End of year	$ 136,546	$ 69,136	$ 13,165	$ -	$ 50,987

Museum	Senior Nutrition	Transportation	Agricultural Extension	Indigent	Medical Indigent	China Springs
$ 46,529	$ 112,075	$ -	$ 21,777	$ 78,177	$ 174,205	$ 9,146
-	-	-	-	-	-	-
134	139,415	82,211	62	223	499	26
-	18,212	5,282	-	-	-	-
-	-	-	-	-	-	-
3,551	1,416	-	-	-	160	-
50,214	271,118	87,493	21,839	78,400	174,864	9,172
-	-	-	-	-	-	-
-	-	-	-	-	-	-
-	-	-	-	-	-	-
-	-	-	-	-	-	-
-	-	-	-	-	-	-
-	316,322	-	-	53,728	137,386	-
44,932	-	-	-	-	-	-
-	-	106,997	26,541	-	-	-
-	-	-	-	-	-	19,176
44,932	316,322	106,997	26,541	53,728	137,386	19,176
5,282	(45,204)	(19,504)	(4,702)	24,672	37,478	(10,004)
-	15,197	63,000	7,000	-	-	10,000
-	-	-	-	-	-	-
-	15,197	63,000	7,000	-	-	10,000
5,282	(30,007)	43,496	2,298	24,672	37,478	(4)
52,070	65,017	118,993	23,143	343,280	323,465	1,108
$ 57,352	$ 35,010	$ 162,489	$ 25,441	$ 367,952	$ 360,943	$ 1,104

LINCOLN COUNTY, NEVADA
NONMAJOR SPECIAL REVENUE FUNDS
COMBINING SCHEDULE OF REVENUES, EXPENDITURES,
AND CHANGES IN FUND BALANCES
Year Ended June 30, 2018
(With Comparative Totals for Year Ended June 30, 2017)

	Ambulance	Regional Streets and Highways	Room Tax	Legal Aid Services
Revenues:				
Taxes	$ -	$ -	$ 77,201	$ -
Licenses and permits	-	-	-	-
Intergovernmental	-	117,021	-	-
Charges for services	80,807	-	-	1,899
Fines and forfeitures	-	-	-	-
Miscellaneous	3	593	-	-
Total revenues	80,810	117,614	77,201	1,899
Expenditures:				
General government	-	-	-	-
Public safety	-	-	-	-
Judicial	-	-	-	4,540
Public works	-	62,661	-	-
Health	87,388	-	-	-
Welfare	-	-	-	-
Culture and recreation	-	-	52,759	-
Community support	-	-	-	-
Intergovernmental	-	-	6,085	-
Total expenditures	87,388	62,661	58,844	4,540
Excess (deficiency) of revenues over expenditures	(6,578)	54,953	18,357	(2,641)
Other financing sources (uses):				
Operating transfers in	-	-	-	-
Operating transfers out	-	(106,721)	(20,000)	-
Total other financing sources (uses)	-	(106,721)	(20,000)	-
Net change in fund balance	(6,578)	(51,768)	(1,643)	(2,641)
Fund balance:				
Beginning of year	16,031	653,609	81,454	13,271
End of year	$ 9,453	$ 601,841	$ 79,811	$ 10,630

Forensic Services	Administrative Assessment	Forfeiture	Recorder Technology	L. C. Housing Authority	Alamo Clinic
$ -	$ -	$ -	$ -	$ -	$ 92,548
-	-	-	-	-	-
-	-	-	-	-	265
1,146	-	-	10,688	-	-
-	36,677	22,577	-	-	-
-	33	19	6	36,772	-
1,146	36,710	22,596	10,694	36,772	92,813
-	-	-	2,200	-	-
1,130	-	15,214	-	-	-
-	48,792	-	-	-	-
-	-	-	-	-	-
-	-	-	-	-	93,157
-	-	-	-	-	-
-	-	-	-	-	-
-	-	-	-	36,073	-
-	-	-	-	-	-
1,130	48,792	15,214	2,200	36,073	93,157
16	(12,082)	7,382	8,494	699	(344)
-	-	-	-	-	-
-	-	-	-	-	-
-	-	-	-	-	-
16	(12,082)	7,382	8,494	699	(344)
7,744	95,032	51,138	7,529	31,164	597
$ 7,760	$ 82,950	$ 58,520	$ 16,023	$ 31,863	$ 253

LINCOLN COUNTY, NEVADA
NONMAJOR SPECIAL REVENUE FUNDS
COMBINING SCHEDULE OF REVENUES, EXPENDITURES,
AND CHANGES IN FUND BALANCES
Year Ended June 30, 2018
(With Comparative Totals for Year Ended June 30, 2017)

	Fair Board	Multi-Species Habitat Conservation	Multi-Species Habitat Conservation Section 7	Youth Activities Counsel
Revenues:				
Taxes	$ -	$ -	$ -	$ -
Licenses and permits	-	-	-	-
Intergovernmental	-	2,247	-	-
Charges for services	-	-	-	-
Fines and forfeitures	-	-	-	-
Miscellaneous	26,164	8	315	-
Total revenues	26,164	2,255	315	-
Expenditures:				
General government	-	2,255	-	-
Public safety	-	-	-	-
Judicial	-	-	-	-
Public works	-	-	-	-
Health	-	-	-	-
Welfare	-	-	-	-
Culture and recreation	40,017	-	-	-
Community support	-	-	-	-
Intergovernmental	-	-	-	-
Total expenditures	40,017	2,255	-	-
Excess (deficiency) of revenues over expenditures	(13,853)	-	315	-
Other financing sources (uses):				
Operating transfers in	20,000	-	-	-
Operating transfers out	-	-	-	-
Total other financing sources (uses)	20,000	-	-	-
Net change in fund balance	6,147	-	315	-
Fund balance:				
Beginning of year	13,971	-	862,566	6,007
End of year	$ 20,118	$ -	$ 862,881	$ 6,007

Genetic Marker Testing	Public Improvement	Airport	Panaca Town Building	Court Facility Fees	Tri County Weed Control	Lincoln County Land Act General
$ -	$ -	$ -	$ -	$ -	$ -	$ -
-	-	-	-	-	-	-
-	-	-	-	-	-	-
12,227	-	1,180	-	40,011	789,559	-
-	-	-	-	-	-	-
-	52	7,318	10,586	25	82	2
12,227	52	8,498	10,586	40,036	789,641	2
12,338	-	-	-	-	787,041	-
-	-	-	-	-	-	-
-	-	-	-	102,187	-	-
-	-	8,793	-	-	-	-
-	-	-	-	-	-	-
-	-	-	-	-	-	-
-	-	-	-	-	-	-
-	-	-	-	-	-	-
-	-	-	-	-	-	-
12,338	-	8,793	-	102,187	787,041	-
(111)	52	(295)	10,586	(62,151)	2,600	2
-	-	-	-	-	-	-
-	-	-	-	-	-	-
-	-	-	-	-	-	-
(111)	52	(295)	10,586	(62,151)	2,600	2
1,453	142,537	26	34,202	131,191	188,238	6,573
$ 1,342	$ 142,589	$ (269)	$ 44,788	$ 69,040	$ 190,838	$ 6,575

LINCOLN COUNTY, NEVADA
NONMAJOR SPECIAL REVENUE FUNDS
COMBINING SCHEDULE OF REVENUES, EXPENDITURES,
AND CHANGES IN FUND BALANCE
Year Ended June 30, 2018
(With Comparative Totals for Year Ended June 30, 2017)

	Lincoln County Land Act Planning and Development	Lincoln County Land Act Education	Lincoln County Land Act Grant Match	Lincoln County Water General
Revenues:				
Taxes	$ -	$ -	$ -	$ -
Licenses and permits	-	-	-	-
Intergovernmental	-	-	-	-
Charges for services	-	-	-	-
Fines and forfeitures	-	-	-	-
Miscellaneous	-	46	-	2
Total revenues	-	46	-	2
Expenditures:				
General government	-	-	-	-
Public safety	-	-	-	-
Judicial	-	-	-	-
Public works	-	-	-	-
Health	-	-	-	-
Welfare	-	-	-	-
Culture and recreation	-	-	-	-
Community support	-	-	-	-
Intergovernmental	-	-	-	-
Total expenditures	-	-	-	-
Excess (deficiency) of revenues over expenditures	-	46	-	2
Other financing sources (uses):				
Operating transfers in	-	-	-	-
Operating transfers out	-	-	-	-
Total other financing sources (uses)	-	-	-	-
Net change in fund balance	-	46	-	2
Fund balance:				
Beginning of year	668	124,755	151	606
End of year	$ 668	$ 124,801	$ 151	$ 608

Lincoln County Water Special Projects	Lincoln County Water Planning and Development	Lincoln County Water Special Use	Lincoln County Water Grant Match	Lincoln County Water District General	Lincoln County Water District Plan & Dev	Lincoln County Water District Special Proj.
$ -	$ -	$ -	$ -	$ -	$ -	$ -
-	-	-	-	-	-	-
-	-	-	-	-	-	-
-	-	-	-	-	-	-
-	-	-	-	-	-	-
3	30	425	31	(585)	(2,189)	(1,315)
3	30	425	31	(585)	(2,189)	(1,315)
-	-	-	-	153,494	14,467	18,000
-	-	-	-	-	-	-
-	-	-	-	-	-	-
-	-	-	-	-	-	-
-	-	-	-	-	-	-
-	-	-	-	-	-	-
-	-	-	-	-	-	-
-	-	-	-	-	-	-
-	-	-	-	-	-	-
-	-	-	-	153,494	14,467	18,000
3	30	425	31	(154,079)	(16,656)	(19,315)
-	-	-	-	100,000	-	-
-	-	-	-	-	-	-
-	-	-	-	100,000	-	-
3	30	425	31	(54,079)	(16,656)	(19,315)
8,395	83,284	1,355,441	83,222	480,528	893,439	713,273
$ 8,398	$ 83,314	$ 1,355,866	$ 83,253	$ 426,449	$ 876,783	$ 693,958

LINCOLN COUNTY, NEVADA
NONMAJOR SPECIAL REVENUE FUNDS
COMBINING SCHEDULE OF REVENUES, EXPENDITURES,
AND CHANGES IN FUND BALANCE
Year Ended June 30, 2018
(With Comparative Totals for Year Ended June 30, 2017)

	Assessor Technology	District Court Technology	District Court Specialty Court	Court Security
Revenues:				
Taxes	$ -	$ -	$ -	$ -
Licenses and permits	-	-	-	-
Intergovernmental	-	-	-	-
Charges for services	10,164	-	4,891	1,020
Fines and forfeitures	-	-	-	-
Miscellaneous	-	-	-	3
Total revenues	10,164	-	4,891	1,023
Expenditures:				
General government	28,229	-	-	-
Public safety	-	-	-	-
Judicial	-	-	15,876	-
Public works	-	-	-	-
Health	-	-	-	-
Welfare	-	-	-	-
Culture and recreation	-	-	-	-
Community support	-	-	-	-
Intergovernmental	-	-	-	-
Total expenditures	28,229	-	15,876	-
Excess (deficiency) of revenues over expenditures	(18,065)	-	(10,985)	1,023
Other financing sources (uses):				
Operating transfers in	-	-	-	-
Operating transfers out	-	-	-	-
Total other financing sources (uses)	-	-	-	-
Net change in fund balance	(18,065)	-	(10,985)	1,023
Fund balance:				
Beginning of year	62,670	5,120	20,961	8,684
End of year	$ 44,605	$ 5,120	$ 9,976	$ 9,707

District Court Enrichment	Nuclear Waste	Property Management	Totals 2018	2017
$ -	$ -	$ -	$ 819,991	$ 813,567
-	-	-	3,028	5,355
-	32,506	-	552,820	676,772
5,815	-	-	982,901	1,019,736
-	-	-	59,254	12,000
16	1	15,585	113,072	235,209
5,831	32,507	15,585	2,531,066	2,762,639
-	32,507	49,078	1,135,594	1,327,285
-	-	-	16,344	3,288
-	-	-	171,395	57,516
-	-	-	118,437	92,467
-	-	-	195,366	202,136
-	-	-	507,436	577,529
-	-	-	348,408	297,524
-	-	-	243,265	322,651
-	-	-	25,261	21,820
-	32,507	49,078	2,761,506	2,902,216
5,831	-	(33,493)	(230,440)	(139,577)
-	-	40,000	265,197	103,025
-	-	-	(130,721)	(655,521)
-	-	40,000	134,476	(552,496)
5,831	-	6,507	(95,964)	(692,073)
37,838	-	48,751	7,441,686	8,133,759
$ 43,669	$ -	$ 55,258	$ 7,345,722	$ 7,441,686

LINCOLN COUNTY, NEVADA
NONMAJOR PIOCHE TOWN SPECIAL REVENUE FUND
COMPARATIVE BALANCE SHEETS
June 30, 2018 and 2017

	2018	2017
ASSETS		
Pooled cash and investments	$ 135,602	$ 117,071
Interest receivable	243	264
Taxes receivable	2,109	2,447
Due from other governments	9,343	9,125
Total assets	$ 147,297	$ 128,907
LIABILITIES		
Accounts payable	$ 3,326	$ 5,298
Accrued payroll and benefits	5,406	4,625
Total liabilities	8,732	9,923
DEFERRED INFLOWS OF RESOURCES		
Unavailable revenue - property taxes	2,019	2,125
FUND BALANCE		
Restricted	136,546	116,859
Total liabilities, deferred inflows of resources, and fund balance	$ 147,297	$ 128,907

LINCOLN COUNTY, NEVADA
NONMAJOR PIOCHE TOWN SPECIAL REVENUE FUND
SCHEDULE OF REVENUES, EXPENDITURES, AND CHANGES IN FUND BALANCE - BUDGET (GAAP BASIS) AND ACTUAL
Year Ended June 30, 2018

(With Comparative Actual Amounts for Year Ended June 30, 2017)

	2018 Budget	2018 Actual	Variance - Positive (Negative)	2017 Actual
Revenues:				
Taxes:				
Property taxes	$ 53,298	$ 52,012	$ (1,286)	$ 49,491
Licenses and permits:				
Gaming licenses	2,500	2,295	(205)	3,825
Liquor licenses	1,300	733	(567)	1,530
Total licenses and permits	3,800	3,028	(772)	5,355
Intergovernmental:				
Consolidated tax	51,712	53,356	1,644	52,785
Miscellaneous:				
Investment income	-	50	50	289
Other	-	-	-	-
Rent	5,870	7,334	1,464	7,832
Total miscellaneous	5,870	7,384	1,514	8,121
Total revenues	114,680	115,780	1,100	115,752
Expenditures:				
Current:				
General government:				
Other general expenses:				
Employee benefits	966	1,080	(114)	981
Services and supplies	10,500	6,851	3,649	6,280
Total general government	11,466	7,931	3,535	7,261
Public works:				
Highways and streets:				
Salaries and wages	10,075	6,516	3,559	8,136
Employee benefits	3,297	3,064	233	3,538
Services and supplies	22,650	20,007	2,643	12,302
Total public works	36,022	29,587	6,435	23,976
Health:				
Cemetery:				
Salaries and wages	2,466	1,871	595	2,435
Employee benefits	690	748	(58)	649
Services and supplies	3,691	1,121	2,570	3,143
Total health	$ 6,847	$ 3,740	$ 3,107	$ 6,227

LINCOLN COUNTY, NEVADA
NONMAJOR PIOCHE TOWN SPECIAL REVENUE FUND (Continued)
SCHEDULE OF REVENUES, EXPENDITURES, AND CHANGES
IN FUND BALANCE - BUDGET (GAAP BASIS) AND ACTUAL
Year Ended June 30, 2018

(With Comparative Actual Amounts for Year Ended June 30, 2017)

	2018 Budget	2018 Actual	Variance - Positive (Negative)	2017 Actual
Expenditures: (Continued)				
Culture and recreation:				
Parks:				
Salaries and wages	$ 6,835	$ 9,592	$ (2,757)	$ 5,706
Employee benefits	2,055	3,536	(1,481)	1,546
Services and supplies	22,200	15,323	6,877	9,965
Total parks	31,090	28,451	2,639	17,217
Swimming pool:				
Salaries and wages	11,051	12,259	(1,208)	11,282
Employee benefits	2,243	3,200	(957)	2,512
Services and supplies	12,750	7,080	5,670	4,748
Total swimming pool	26,044	22,539	3,505	18,542
Town hall:				
Salaries and wages	79	451	(372)	35
Employee benefits	13	180	(167)	10
Services and supplies	4,500	3,214	1,286	3,198
Total town hall	4,592	3,845	747	3,243
Total culture and recreation	61,726	54,835	6,891	39,002
Contingency	3,482	-	3,482	-
Total expenditures	119,543	96,093	23,450	76,466
Excess (deficiency) of revenues over expenditures	(4,863)	19,687	24,550	39,286
Other financing sources (uses):				
Operating transfers out	-	-	-	(3,083)
Net change in fund balance	(4,863)	19,687	24,550	36,203
Fund balance:				
Beginning of year	71,682	116,859	45,177	80,656
End of year	$ 66,819	$ 136,546	$ 69,727	$ 116,859

LINCOLN COUNTY, NEVADA
NONMAJOR ALAMO TOWN SPECIAL REVENUE FUND
COMPARATIVE BALANCE SHEETS
June 30, 2018 and 2017

	2018	2017
ASSETS		
Pooled cash and investments	$ 69,175	$ 47,008
Interest receivable	125	106
Taxes receivable	686	1,514
Due from other governments	3,884	3,785
Total assets	$ 73,870	$ 52,413
LIABILITIES		
Accounts payable	$ 3,381	$ 3,715
Accrued payroll and benefits	1,070	953
Total liabilities	4,451	4,668
DEFERRED INFLOWS OF RESOURCES		
Unavailable revenue - property taxes	283	1,433
FUND BALANCE		
Restricted	69,136	46,312
Total liabilities, deferred inflows of resources, and fund balance	$ 73,870	$ 52,413

LINCOLN COUNTY, NEVADA
NONMAJOR ALAMO TOWN SPECIAL REVENUE FUND
SCHEDULE OF REVENUES, EXPENDITURES, AND CHANGES
IN FUND BALANCE - BUDGET (GAAP BASIS) AND ACTUAL
Year Ended June 30, 2018
(With Comparative Actual Amounts for Year Ended June 30, 2017)

	2018		Variance - Positive	2017
	Budget	Actual	(Negative)	Actual
Revenues:				
Taxes:				
Property taxes	$ 52,121	$ 53,723	$ 1,602	$ 48,506
Intergovernmental:				
Consolidated tax	21,430	22,132	702	21,882
Miscellaneous:				
Investment income	50	27	(23)	119
Other	4,000	5,160	1,160	6,855
Total miscellaneous	4,050	5,187	1,137	6,974
Total revenues	77,601	81,042	3,441	77,362
Expenditures:				
Current:				
General government:				
Salaries and wages	22,527	18,754	3,773	21,225
Employee benefits	2,272	2,545	(273)	2,704
Services and supplies	16,908	4,083	12,825	2,148
Total general government	41,707	25,382	16,325	26,077
Public works:				
Highways and streets:				
Services and supplies	4,612	2,161	2,451	2,429
Culture and recreation:				
P.V. senior center:				
Services and supplies	4,367	3,427	940	3,406
Parks:				
Services and supplies	48,004	27,248	20,756	29,568
Total culture and recreation	52,371	30,675	21,696	32,974
Total expenditures	$ 98,690	$ 58,218	$ 40,472	$ 61,480

LINCOLN COUNTY, NEVADA
NONMAJOR ALAMO TOWN SPECIAL REVENUE FUND (Continued)
SCHEDULE OF REVENUES, EXPENDITURES, AND CHANGES
IN FUND BALANCE - BUDGET (GAAP BASIS) AND ACTUAL
Year Ended June 30, 2018
(With Comparative Actual Amounts for Year Ended June 30, 2017)

	2018		Variance - Positive	2017
	Budget	Actual	(Negative)	Actual
Excess (deficiency) of revenues over expenditures	$ (21,089)	$ 22,824	$ 43,913	$ 15,882
Fund balance:				
Beginning of year	23,351	46,312	22,961	30,430
End of year	$ 2,262	$ 69,136	$ 66,874	$ 46,312

LINCOLN COUNTY, NEVADA
NONMAJOR PANACA TOWN SPECIAL REVENUE FUND
COMPARATIVE BALANCE SHEETS
June 30, 2018 and 2017

	2018	2017
ASSETS		
Pooled cash and investments	$ 8,638	$ 5,283
Interest receivable	13	3
Taxes receivable	279	157
Due from other governments	7,040	6,870
Total assets	$ 15,970	$ 12,313
LIABILITIES		
Accounts payable	$ 2,395	$ 2,695
Accrued payroll and benefits	202	-
Total liabilities	2,597	2,695
DEFERRED INFLOWS OF RESOURCES		
Unavailable revenue - property taxes	208	130
FUND BALANCE		
Restricted	13,165	9,488
Total liabilities, deferred inflows of resources, and fund balance	$ 15,970	$ 12,313

LINCOLN COUNTY, NEVADA
NONMAJOR PANACA TOWN SPECIAL REVENUE FUND
SCHEDULE OF REVENUES, EXPENDITURES, AND CHANGES
IN FUND BALANCE - BUDGET (GAAP BASIS) AND ACTUAL
Year Ended June 30, 2018

(With Comparative Actual Amounts for Year Ended June 30, 2017)

	2018 Budget	2018 Actual	Variance - Positive (Negative)	2017 Actual
Revenues:				
Taxes:				
Property taxes	$ 11,730	$ 11,415	$ (315)	$ 11,450
Intergovernmental:				
Consolidated tax	38,825	40,104	1,279	39,656
Miscellaneous:				
Investment income	-	3	3	(1)
Rent	750	-	(750)	125
Total miscellaneous	750	3	(747)	124
Total revenues	51,305	51,522	217	51,230
Expenditures:				
Current:				
General government:				
Employee benefits	224	546	(322)	448
Services and supplies	4,000	2,126	1,874	3,997
Total general government	4,224	2,672	1,552	4,445
Public works:				
Highways and streets:				
Services and supplies	17,520	15,235	2,285	17,573
Health:				
Cemetery:				
Salaries and wages	9,600	9,600	-	9,600
Employee benefits	1,000	1,050	(50)	1,020
Services and supplies	800	431	369	429
Total health	$ 11,400	$ 11,081	$ 319	$ 11,049

LINCOLN COUNTY, NEVADA
NONMAJOR PANACA TOWN SPECIAL REVENUE FUND
SCHEDULE OF REVENUES, EXPENDITURES, AND CHANGES
IN FUND BALANCE - BUDGET (GAAP BASIS) AND ACTUAL
Year Ended June 30, 2018

(With Comparative Actual Amounts for Year Ended June 30, 2017)

	2018 Budget	2018 Actual	Variance - Positive (Negative)	2017 Actual
Expenditures continued:				
Culture and recreation:				
Parks:				
Services and supplies	$ 19,587	$ 12,545	$ 7,042	$ 13,247
Town hall:				
Salaries and wages	2,400	2,400	-	2,400
Employee benefits	300	184	116	184
Services and supplies	4,300	3,728	572	4,457
Sesquicentennial celebration:				
Services and supplies	1,000	-	1,000	-
Total culture and recreation	27,587	18,857	8,730	20,288
Total expenditures	60,731	47,845	12,886	53,355
Excess (deficiency) of revenues over expenditures	(9,426)	3,677	13,103	(2,125)
Fund balance:				
Beginning of year	12,289	9,488	(2,801)	11,613
End of year	$ 2,863	$ 13,165	$ 10,302	$ 9,488

LINCOLN COUNTY, NEVADA
NONMAJOR RESOURCE DEVELOPMENT AUTHORITY SPECIAL REVENUE FUND
COMPARATIVE BALANCE SHEETS
June 30, 2018 and 2017

	2018	2017
ASSETS		
Pooled cash and investments	$ 86,329	$ 59,406
Due from other governments	-	16,514
Total assets	$ 86,329	$ 75,920
LIABILITIES		
Accounts payable	$ 2,455	$ 4,518
Unearned revenue	83,874	71,402
Total liabilities	86,329	75,920
FUND BALANCE		
Nonspendable	-	-
Total liabilities and fund balance	$ 86,329	$ 75,920

LINCOLN COUNTY, NEVADA
NONMAJOR RESOURCE DEVELOPMENT AUTHORITY SPECIAL REVENUE FUND
SCHEDULE OF REVENUES, EXPENDITURES, AND CHANGES
IN FUND BALANCE - BUDGET (GAAP BASIS) AND ACTUAL
Year Ended June 30, 2018
(With Comparative Actual Amounts for Year Ended June 30, 2017)

	2018 Budget	2018 Actual	Variance - Positive (Negative)	2017 Actual
Revenues:				
Intergovernmental:				
Grants	$ 193,320	$ 62,354	$ (130,966)	$ 87,570
Miscellaneous:				
Other	-	-	-	1,442
Donations	-	1,300	1,300	4,000
Total miscellaneous	-	1,300	1,300	5,442
Total revenues	193,320	63,654	(129,666)	93,012
Expenditures:				
Current:				
Community support:				
Services and supplies	203,320	73,654	129,666	93,012
Excess (deficiency) of revenues over expenditures	(10,000)	(10,000)	-	-
Other financing sources (uses):				
Operating transfers in	10,000	10,000	-	-
Net change in fund balance	-	-	-	-
Fund balance:				
Beginning of year	-	-	-	-
End of year	$ -	$ -	$ -	$ -

LINCOLN COUNTY, NEVADA
NONMAJOR COUNTY LIBRARY SPECIAL REVENUE FUND
COMPARATIVE BALANCE SHEETS
June 30, 2018 and 2017

	2018	2017
ASSETS		
Pooled cash and investments	$ 57,226	$ 80,993
Taxes receivable	1,397	1,140
Due from governments	93	4,114
Total assets	$ 58,716	$ 86,247
LIABILITIES		
Accounts payable	$ 3,671	$ 12,835
Accrued payroll and benefits	2,905	2,611
Total liabilities	6,576	15,446
DEFERRED INFLOWS OF RESOURCES		
Unavailable revenue - property taxes	1,153	969
FUND BALANCE		
Restricted	50,987	69,832
Total liabilities, deferred inflows of resources, and fund balance	$ 58,716	$ 86,247

LINCOLN COUNTY, NEVADA
NONMAJOR COUNTY LIBRARY SPECIAL REVENUE FUND
SCHEDULE OF REVENUES, EXPENDITURES, AND CHANGES IN FUND BALANCE - BUDGET (GAAP BASIS) AND ACTUAL
Year Ended June 30, 2018
(With Comparative Actual Amounts for Year Ended June 30, 2017)

	2018		Variance - Positive	2017
	Budget	Actual	(Negative)	Actual
Revenues:				
Taxes:				
Property taxes	$ 93,001	$ 91,183	$ (1,818)	$ 93,418
Intergovernmental:				
Private car line	-	172	172	-
Fish and wildlife	-	93	93	114
Grants	-	-	-	4,000
Total intergovernmental	-	265	265	4,114
Miscellaneous:				
Rent	9,500	40	(9,460)	-
Total revenues	102,501	91,488	(11,013)	97,532
Expenditures:				
Current:				
Culture and recreation:				
Libraries:				
Salaries and wages	41,238	38,600	2,638	38,592
Employee benefits	18,154	18,424	(270)	16,428
Services and supplies	32,500	23,734	8,766	25,747
Capital outlay	35,000	25,575	9,425	9,696
Total expenditures	126,892	106,333	20,559	90,463
Excess (deficiency) of revenues over expenditures	(24,391)	(14,845)	9,546	7,069
Other financing sources (uses):				
Operating transfers out	-	(4,000)	(4,000)	(20,000)
Net change in fund balance	(24,391)	(18,845)	5,546	(12,931)
Fund balance:				
Beginning of year	56,310	69,832	13,522	82,763
End of year	$ 31,919	$ 50,987	$ 19,068	$ 69,832

LINCOLN COUNTY, NEVADA
NONMAJOR MUSEUM SPECIAL REVENUE FUND
COMPARATIVE BALANCE SHEETS
June 30, 2018 and 2017

	2018	2017
ASSETS		
Pooled cash and investments	$ 60,377	$ 54,501
Taxes receivable	712	587
Due from other governments	46	58
Total assets	$ 61,135	$ 55,146
LIABILITIES		
Accounts payable	$ 402	$ 563
Accrued payroll and benefits	2,794	2,013
Total liabilities	3,196	2,576
DEFERRED INFLOWS OF RESOURCES		
Unavailable revenue - property taxes	587	500
FUND BALANCE		
Restricted	57,352	52,070
Total liabilities, deferred inflows of resources, and fund balance	$ 61,135	$ 55,146

LINCOLN COUNTY, NEVADA
NONMAJOR MUSEUM SPECIAL REVENUE FUND
SCHEDULE OF REVENUES, EXPENDITURES, AND CHANGES IN FUND BALANCE - BUDGET (GAAP BASIS) AND ACTUAL
Year Ended June 30, 2018
(With Comparative Actual Amounts for Year Ended June 30, 2017)

	2018 Budget	2018 Actual	Variance - Positive (Negative)	2017 Actual
Revenues:				
Taxes:				
Property taxes	$ 47,556	$ 46,529	$ (1,027)	$ 47,698
Intergovernmental:				
Fish and wildlife	-	47	47	58
Private car line	-	87	87	-
Total intergovernmental	-	134	134	58
Miscellaneous:				
Donations	-	3,551	3,551	2,342
Total revenues	47,556	50,214	2,658	50,098
Expenditures:				
Current:				
Culture and recreation:				
Museum:				
Salaries and wages	38,779	28,908	9,871	28,134
Employee benefits	10,002	9,654	348	9,325
Services and supplies	9,600	6,370	3,230	12,823
Total expenditures	58,381	44,932	13,449	50,282
Excess (deficiency) of revenues over expenditures	(10,825)	5,282	16,107	(184)
Other financing sources (uses):				
Operating transfers out	-	-	-	(20,000)
Net change in fund balance	(10,825)	5,282	16,107	(20,184)
Fund balance:				
Beginning of year	37,198	52,070	14,872	72,254
End of year	$ 26,373	$ 57,352	$ 30,979	$ 52,070

LINCOLN COUNTY, NEVADA
NONMAJOR SENIOR NUTRITION SPECIAL REVENUE FUND
COMPARATIVE BALANCE SHEETS
June 30, 2018 and 2017

	2018	2017
ASSETS		
Pooled cash and investments	$ 95,320	$ 86,791
Taxes receivable	1,718	1,440
Due from other governments	112	138
Due from others	1,679	1,953
Total assets	$ 98,829	$ 90,322
LIABILITIES		
Accounts payable	$ 16,438	$ 17,002
Accrued payroll and benefits	7,420	7,074
Unearned revenue	38,551	-
Total liabilities	62,409	24,076
DEFERRED INFLOWS OF RESOURCES		
Unavailable revenue - property taxes	1,410	1,229
FUND BALANCE		
Restricted	35,010	65,017
Total liabilities, deferred inflows of resources, and fund balance	$ 98,829	$ 90,322

LINCOLN COUNTY, NEVADA
NONMAJOR SENIOR NUTRITION SPECIAL REVENUE FUND
SCHEDULE OF REVENUES, EXPENDITURES, AND CHANGES IN FUND BALANCE - BUDGET (GAAP BASIS) AND ACTUAL
Year Ended June 30, 2018
(With Comparative Actual Amounts for Year Ended June 30, 2017)

	2018 Budget	2018 Actual	Variance - Positive (Negative)	2017 Actual
Revenues:				
Taxes:				
Property taxes	$ 115,169	$ 112,075	$ (3,094)	$ 115,079
Intergovernmental:				
Private car line	210	208	(2)	-
Grants	139,094	139,094	-	148,957
Fish and wildlife	115	113	(2)	138
Total intergovernmental	139,419	139,415	(4)	149,095
Charges for services:				
Sales - meals	25,000	18,212	(6,788)	17,830
Miscellaneous:				
Other	2,000	-	(2,000)	13,241
Donations	-	1,416	1,416	3,214
Total miscellaneous	2,000	1,416	(584)	16,455
Total revenues	281,588	271,118	(10,470)	298,459
Expenditures:				
Current:				
Welfare:				
Salaries and wages	113,039	87,456	25,583	90,085
Employee benefits	39,117	46,597	(7,480)	48,727
Services and supplies	169,684	177,069	(7,385)	211,118
Capital outlay	-	5,200	(5,200)	-
Total expenditures	321,840	316,322	5,518	349,930
Excess (deficiency) of revenues over expenditures	(40,252)	(45,204)	(4,952)	(51,471)
Other financing sources (uses):				
Operating transfers in	-	15,197	15,197	13,425
Net change in fund balance	(40,252)	(30,007)	10,245	(38,046)
Fund balance:				
Beginning of year	44,625	65,017	20,392	103,063
End of year	$ 4,373	$ 35,010	$ 30,637	$ 65,017

LINCOLN COUNTY, NEVADA
NONMAJOR TRANSPORTATION SPECIAL REVENUE FUND
COMPARATIVE BALANCE SHEETS
June 30, 2018 and 2017

	2018	2017
ASSETS		
Pooled cash and investments	$ 160,894	$ 112,161
Due from other governments	8,517	12,336
Total assets	$ 169,411	$ 124,497
LIABILITIES		
Accounts payable	$ 3,014	$ 2,390
Accrued payroll and benefits	3,908	3,114
Total liabilities	6,922	5,504
FUND BALANCE		
Restricted	162,489	118,993
Total liabilities and fund balance	$ 169,411	$ 124,497

LINCOLN COUNTY, NEVADA
NONMAJOR TRANSPORTATION SPECIAL REVENUE FUND
SCHEDULE OF REVENUES, EXPENDITURES, AND CHANGES IN FUND BALANCE - BUDGET (GAAP BASIS) AND ACTUAL
Year Ended June 30, 2018
(With Comparative Actual Amounts for Year Ended June 30, 2017)

	2018		Variance - Positive	2017
	Budget	Actual	(Negative)	Actual
Revenues:				
Intergovernmental:				
Grants	$ 116,136	$ 82,211	$ (33,925)	$ 163,263
Charges for services:				
Bus fares	5,800	5,282	(518)	5,462
Total revenues	121,936	87,493	(34,443)	168,725
Expenditures:				
Current:				
Community support:				
Salaries and wages	48,101	49,033	(932)	41,261
Employee benefits	25,706	26,832	(1,126)	23,980
Services and supplies	42,800	31,132	11,668	32,584
Capital outlay	56,136	-	56,136	69,355
Total expenditures	172,743	106,997	65,746	167,180
Excess (deficiency) of revenues over expenditures	(50,807)	(19,504)	31,303	1,545
Other financing sources (uses):				
Operating transfers in	40,000	63,000	23,000	-
Net change in fund balance	(10,807)	43,496	54,303	1,545
Fund balance:				
Beginning of year	88,893	118,993	30,100	117,448
End of year	$ 78,086	$ 162,489	$ 84,403	$ 118,993

LINCOLN COUNTY, NEVADA
NONMAJOR AGRICULTURAL EXTENSION SPECIAL REVENUE FUND
COMPARATIVE BALANCE SHEETS
June 30, 2018 and 2017

	2018	2017
ASSETS		
Pooled cash and investments	$ 29,491	$ 21,691
Taxes receivable	334	281
Due from other governments	22	2,981
Total assets	$ 29,847	$ 24,953
LIABILITIES		
Accounts payable	$ 3,470	$ 951
Accrued payroll and benefits	662	619
Total liabilities	4,132	1,570
DEFERRED INFLOWS OF RESOURCES		
Unavailable revenue - property taxes	274	240
FUND BALANCE		
Restricted	25,441	23,143
Total liabilities, deferred inflows of resources, and fund balance	$ 29,847	$ 24,953

LINCOLN COUNTY, NEVADA
NONMAJOR AGRICULTURAL EXTENSION SPECIAL REVENUE FUND
SCHEDULE OF REVENUES, EXPENDITURES, AND CHANGES
IN FUND BALANCE - BUDGET (GAAP BASIS) AND ACTUAL
Year Ended June 30, 2018
(With Comparative Actual Amounts for Year Ended June 30, 2017)

	2018		Variance - Positive	2017
	Budget	Actual	(Negative)	Actual
Revenues:				
Taxes:				
Property taxes	$ 22,384	$ 21,777	$ (607)	$ 22,358
Intergovernmental:				
Private car line	-	40	40	-
Fish and wildlife	-	22	22	27
Total intergovernmental	-	62	62	27
Miscellaneous:				
Other	5,460	-	(5,460)	500
Total revenues	27,844	21,839	(6,005)	22,885
Expenditures:				
Current:				
Community support:				
Salaries and wages	13,507	13,579	(72)	13,507
Employee benefits	1,437	1,485	(48)	1,436
Services and supplies	23,034	11,477	11,557	3,466
Capital outlay	1,500	-	1,500	-
Total expenditures	39,478	26,541	12,937	18,409
Excess (deficiency) of revenues over expenditures	(11,634)	(4,702)	6,932	4,476
Other financing sources (uses):				
Operating transfers in	7,000	7,000	-	-
Net change in fund balance	(4,634)	2,298	6,932	4,476
Fund balance:				
Beginning of year	4,634	23,143	18,509	18,667
End of year	$ -	$ 25,441	$ 25,441	$ 23,143

LINCOLN COUNTY, NEVADA
NONMAJOR INDIGENT SPECIAL REVENUE FUND
COMPARATIVE BALANCE SHEETS
June 30, 2018 and 2017

	2018	2017
ASSETS		
Pooled cash and investments	$ 371,512	$ 346,271
Taxes receivable	1,198	1,008
Due from other governments	78	96
Total assets	$ 372,788	$ 347,375
LIABILITIES		
Accounts payable	$ 993	$ 950
Accrued payroll and benefits	2,860	2,283
Total liabilities	3,853	3,233
DEFERRED INFLOWS OF RESOURCES		
Unavailable revenue - property taxes	983	862
FUND BALANCE		
Restricted	367,952	343,280
Total liabilities, deferred inflows of resources, and fund balance	$ 372,788	$ 347,375

LINCOLN COUNTY, NEVADA
NONMAJOR INDIGENT SPECIAL REVENUE FUND
SCHEDULE OF REVENUES, EXPENDITURES, AND CHANGES IN FUND BALANCE - BUDGET (GAAP BASIS) AND ACTUAL
Year Ended June 30, 2018
(With Comparative Actual Amounts for Year Ended June 30, 2017)

	2018 Budget	2018 Actual	Variance - Positive (Negative)	2017 Actual
Revenues:				
Taxes:				
Property taxes	$ 80,356	$ 78,177	$ (2,179)	$ 80,267
Intergovernmental:				
Private car line	-	145	145	-
Fish and wildlife	-	78	78	96
Total intergovernmental	-	223	223	96
Total revenues	80,356	78,400	(1,956)	80,363
Expenditures:				
Current:				
Welfare:				
Salaries and wages	34,925	36,498	(1,573)	34,865
Employee benefits	12,728	13,702	(974)	13,182
Service and supplies	169,525	3,528	165,997	8,402
Jail:				
Service and supplies	25,000	-	25,000	-
Total expenditures	242,178	53,728	188,450	56,449
Excess (deficiency) of revenues over expenditures	(161,822)	24,672	186,494	23,914
Fund balance:				
Beginning of year	168,271	343,280	175,009	319,366
End of year	$ 6,449	$ 367,952	$ 361,503	$ 343,280

LINCOLN COUNTY, NEVADA
NONMAJOR MEDICAL INDIGENT SPECIAL REVENUE FUND
COMPARATIVE BALANCE SHEETS
June 30, 2018 and 2017

	2018	2017
ASSETS		
Pooled cash and investments	$ 436,522	$ 350,493
Interest receivable	773	821
Taxes receivable	2,672	2,249
Due from other governments	175	215
Total assets	$ 440,142	$ 353,778
LIABILITIES		
Accounts payable	$ 77,007	$ 28,391
DEFERRED INFLOWS OF RESOURCES		
Unavailable revenue - property taxes	2,192	1,922
FUND BALANCE		
Restricted	360,943	323,465
Total liabilities, deferred inflows of resources, and fund balance	$ 440,142	$ 353,778

LINCOLN COUNTY, NEVADA
NONMAJOR MEDICAL INDIGENT SPECIAL REVENUE FUND
SCHEDULE OF REVENUES, EXPENDITURES, AND CHANGES IN FUND BALANCE - BUDGET (GAAP BASIS) AND ACTUAL
Year Ended June 30, 2018
(With Comparative Actual Amounts for Year Ended June 30, 2017)

	2018		Variance - Positive	2017
	Budget	Actual	(Negative)	Actual
Revenues:				
Taxes:				
Property taxes	$ 179,067	$ 174,205	$ (4,862)	$ 178,869
Intergovernmental:				
Private car line tax	-	324	324	-
Fish and wildlife	-	175	175	215
Total intergovernmental	-	499	499	215
Miscellaneous:				
Investment income	300	160	(140)	638
Total revenues	179,367	174,864	(4,503)	179,722
Expenditures:				
Current:				
Welfare:				
Service and supplies	377,472	137,386	240,086	171,150
Excess (deficiency) of revenues over expenditures	(198,105)	37,478	235,583	8,572
Fund balance:				
Beginning of year	205,447	323,465	118,018	314,893
End of year	$ 7,342	$ 360,943	$ 353,601	$ 323,465

LINCOLN COUNTY, NEVADA
NONMAJOR CHINA SPRINGS SPECIAL REVENUE FUND
COMPARATIVE BALANCE SHEETS
June 30, 2018 and 2017

	2018	2017
ASSETS		
Pooled cash and investments	$ 1,069	$ 1,079
Taxes receivable	140	117
Due from other governments	10	13
Total assets	$ 1,219	$ 1,209
LIABILITIES		
Accounts payable	$ -	$ -
DEFERRED INFLOWS OF RESOURCES		
Unavailable revenue - property taxes	115	101
FUND BALANCE		
Restricted	1,104	1,108
Total liabilities, deferred inflows of resources, and fund balance	$ 1,219	$ 1,209

LINCOLN COUNTY, NEVADA
NONMAJOR CHINA SPRINGS SPECIAL REVENUE FUND
SCHEDULE OF REVENUES, EXPENDITURES, AND CHANGES
IN FUND BALANCE - BUDGET (GAAP BASIS) AND ACTUAL
Year Ended June 30, 2018
(With Comparative Actual Amounts for Year Ended June 30, 2017)

	2018		Variance - Positive	2017
	Budget	Actual	(Negative)	Actual
Revenues:				
Taxes:				
Property taxes	$ 9,400	$ 9,146	$ (254)	$ 9,391
Intergovernmental:				
Private car line	45	17	(28)	-
Fish and wildlife	25	9	(16)	11
Total intergovernmental	70	26	(44)	11
Total revenues	9,470	9,172	(298)	9,402
Expenditures:				
Current:				
Intergovernmental:				
Services and supplies	19,470	19,176	294	16,587
Excess (deficiency) of revenues over expenditures	(10,000)	(10,004)	(4)	(7,185)
Other financing sources (uses):				
Operating transfers in	10,000	10,000	-	4,000
Net change in fund balance	-	(4)	(4)	(3,185)
Fund balance:				
Beginning of year	-	1,108	1,108	4,293
End of year	$ -	$ 1,104	$ 1,104	$ 1,108

LINCOLN COUNTY, NEVADA
NONMAJOR AMBULANCE SPECIAL REVENUE FUND
COMPARATIVE BALANCE SHEETS
June 30, 2018 and 2017

	2018	2017
ASSETS		
Pooled cash and investments	$ 15,363	$ 31,460
Interest receivable	16	50
Total assets	$ 15,379	$ 31,510
LIABILITIES		
Accounts payable	$ 3,996	$ 7,995
Accrued payroll and benefits	1,930	7,484
Total liabilities	5,926	15,479
FUND BALANCE		
Committed	9,453	16,031
Total liabilities and fund balance	$ 15,379	$ 31,510

LINCOLN COUNTY, NEVADA
NONMAJOR AMBULANCE SPECIAL REVENUE FUND
SCHEDULE OF REVENUES, EXPENDITURES, AND CHANGES IN FUND BALANCE - BUDGET (GAAP BASIS) AND ACTUAL
Year Ended June 30, 2018
(With Comparative Actual Amounts for Year Ended June 30, 2017)

	2018		Variance - Positive	2017
	Budget	Actual	(Negative)	Actual
Revenues:				
Charges for services:				
Ambulance fees	$ 110,000	$ 80,807	$ (29,193)	$ 70,288
Miscellaneous:				
Investment income	100	3	(97)	(15)
Total revenues	110,100	80,810	(29,290)	70,273
Expenditures:				
Current:				
Health:				
Salaries and wages	37,000	34,920	2,080	35,995
Employee benefits	10,400	5,238	5,162	4,346
Services and supplies	62,700	47,230	15,470	49,588
Total expenditures	110,100	87,388	22,712	89,929
Excess (deficiency) of revenues over expenditures	-	(6,578)	(6,578)	(19,656)
Other financing sources (uses):				
Operating transfers in	-	-	-	10,000
Net change in fund balance	-	(6,578)	(6,578)	(9,656)
Fund balance:				
Beginning of year	-	16,031	16,031	25,687
End of year	$ -	$ 9,453	$ 9,453	$ 16,031

LINCOLN COUNTY, NEVADA
NONMAJOR REGIONAL TRANSPORTATION COMMISSION SPECIAL REVENUE FUND
COMPARATIVE BALANCE SHEETS
June 30, 2018 and 2017

	2018	2017
ASSETS		
Pooled cash and investments	$ 590,718	$ 652,176
Interest receivable	2,865	1,528
Due from other governments	20,963	21,282
Total assets	$ 614,546	$ 674,986
LIABILITIES		
Accounts payable	$ 12,705	$ 21,377
FUND BALANCE		
Restricted	601,841	653,609
Total liabilities and fund balance	$ 614,546	$ 674,986

LINCOLN COUNTY, NEVADA
NONMAJOR REGIONAL TRANSPORTATION COMMISSION SPECIAL REVENUE FUND
SCHEDULE OF REVENUES, EXPENDITURES, AND CHANGES
IN FUND BALANCE - BUDGET (GAAP BASIS) AND ACTUAL
Year Ended June 30, 2018
(With Comparative Actual Amounts for Year Ended June 30, 2017)

	2018 Budget	2018 Actual	Variance - Positive (Negative)	2017 Actual
Revenues:				
Intergovernmental:				
Optional $0.04 gas tax	$ 127,188	$ 117,021	$ (10,167)	$ 117,411
Miscellaneous:				
Investment income	2,000	593	(1,407)	914
Total revenues	129,188	117,614	(11,574)	118,325
Expenditures:				
Current:				
Public works:				
Employee benefits	230	295	(65)	268
Services and supplies	574,770	24,166	550,604	6,148
Capital outlay	-	38,200	(38,200)	21,010
Total expenditures	575,000	62,661	512,339	27,426
Excess (deficiency) of revenues over expenditures	(445,812)	54,953	500,765	90,899
Other financing sources (uses):				
Operating transfers out	(40,000)	(106,721)	(66,721)	(49,505)
Net change in fund balance	(485,812)	(51,768)	434,044	41,394
Fund balance:				
Beginning of year	491,985	653,609	161,624	612,215
End of year	$ 6,173	$ 601,841	$ 595,668	$ 653,609

LINCOLN COUNTY, NEVADA
NONMAJOR ROOM TAX SPECIAL REVENUE FUND
COMPARATIVE BALANCE SHEETS
June 30, 2018 and 2017

	2018	2017
ASSETS		
Pooled cash and investments	$ 75,814	$ 78,060
Taxes receivable	6,456	5,083
Total assets	$ 82,270	$ 83,143
LIABILITIES		
Accounts payable	$ 2,012	$ 1,379
Accrued payroll and benefits	447	310
Total liabilities	2,459	1,689
FUND BALANCE		
Restricted	79,811	81,454
Total liabilities and fund balance	$ 82,270	$ 83,143

LINCOLN COUNTY, NEVADA
NONMAJOR ROOM TAX SPECIAL REVENUE FUND
SCHEDULE OF REVENUES, EXPENDITURES AND CHANGES IN FUND BALANCE - BUDGET (GAAP BASIS) AND ACTUAL
Year Ended June 30, 2018
(With Comparative Actual Amounts for Year Ended June 30, 2017)

	2018		Variance - Positive	2017
	Budget	Actual	(Negative)	Actual
Revenues:				
Taxes:				
Room tax	$ 65,000	$ 77,201	$ 12,201	$ 62,018
Expenditures:				
Current:				
Culture and recreation:				
Salaries and wages	3,360	3,360	-	3,360
Employee benefits	358	860	(502)	805
Services and supplies	22,000	48,539	(26,539)	27,834
Capital outlay	-	-	-	5,000
Total culture and recreation	25,718	52,759	(27,041)	36,999
Intergovernmental:				
Services and supplies	5,500	6,085	(585)	5,233
Total expenditures	31,218	58,844	(27,626)	42,232
Excess (deficiency) of revenues over expenditures	33,782	18,357	(15,425)	19,786
Other financing sources (uses):				
Operating transfers out	(20,000)	(20,000)	-	-
Net change in fund balance	13,782	(1,643)	(15,425)	19,786
Fund balance:				
Beginning of year	36,954	81,454	44,500	61,668
End of year	$ 50,736	$ 79,811	$ 29,075	$ 81,454

LINCOLN COUNTY, NEVADA
NONMAJOR LEGAL AID SERVICES SPECIAL REVENUE FUND
COMPARATIVE BALANCE SHEETS
June 30, 2018 and 2017

	2018	2017
ASSETS		
Pooled cash and investments	$ 10,630	$ 13,271
LIABILITIES		
Accounts payable	$ -	$ -
FUND BALANCE		
Restricted	10,630	13,271
Total liabilities and fund balance	$ 10,630	$ 13,271

LINCOLN COUNTY, NEVADA
NONMAJOR LEGAL AID SERVICES SPECIAL REVENUE FUND
SCHEDULE OF REVENUES, EXPENDITURES, AND CHANGES IN FUND BALANCE - BUDGET (GAAP BASIS) AND ACTUAL
Year Ended June 30, 2018
(With Comparative Actual Amounts for Year Ended June 30, 2017)

	2018 Budget	2018 Actual	Variance - Positive (Negative)	2017 Actual
Revenues:				
Charges for services:				
Other	$ 1,300	$ 1,899	$ 599	$ 2,143
Expenditures:				
Current:				
Judicial:				
Services and supplies	-	4,540	(4,540)	1,122
Excess (deficiency) of revenues over expenditures	1,300	(2,641)	(3,941)	1,021
Fund balance:				
Beginning of year	8,245	13,271	5,026	12,250
End of year	$ 9,545	$ 10,630	$ 1,085	$ 13,271

LINCOLN COUNTY, NEVADA
NONMAJOR FORENSIC SERVICES SPECIAL REVENUE FUND
COMPARATIVE BALANCE SHEETS
June 30, 2018 and 2017

	2018	2017
ASSETS		
Pooled cash and investments	$ 8,035	$ 7,744
LIABILITIES		
Accounts payable	$ 275	$ -
FUND BALANCE		
Restricted	7,760	7,744
Total liabilities and fund balance	$ 8,035	$ 7,744

LINCOLN COUNTY, NEVADA
NONMAJOR FORENSIC SERVICES SPECIAL REVENUE FUND
SCHEDULE OF REVENUES, EXPENDITURES, AND CHANGES
IN FUND BALANCE - BUDGET (GAAP BASIS) AND ACTUAL
Year Ended June 30, 2018
(With Comparative Actual Amounts for Year Ended June 30, 2017)

	2018 Budget	2018 Actual	Variance - Positive (Negative)	2017 Actual
Revenues:				
Charges for services:				
Other	$ 2,500	$ 1,146	$ (1,354)	$ 1,435
Expenditures:				
Current:				
Public safety:				
Service and supplies	10,500	1,130	9,370	850
Excess (deficiency) of revenues over expenditures	(8,000)	16	8,016	585
Fund balance:				
Beginning of year	8,000	7,744	(256)	7,159
End of year	$ -	$ 7,760	$ 7,760	$ 7,744

LINCOLN COUNTY, NEVADA
NONMAJOR ADMINISTRATIVE ASSESSMENT SPECIAL REVENUE FUND
COMPARATIVE BALANCE SHEETS
June 30, 2018 and 2017

	2018	2017
ASSETS		
Pooled cash and investments	$ 89,792	$ 95,216
Interest receivable	158	216
Total assets	$ 89,950	$ 95,432
LIABILITIES		
Accounts payable	$ 7,000	$ 400
FUND BALANCE		
Restricted	82,950	95,032
Total liabilities and fund balance	$ 89,950	$ 95,432

LINCOLN COUNTY, NEVADA
NONMAJOR ADMINISTRATIVE ASSESSMENT SPECIAL REVENUE FUND
SCHEDULE OF REVENUES, EXPENDITURES, AND CHANGES
IN FUND BALANCE - BUDGET (GAAP BASIS) AND ACTUAL
Year Ended June 30, 2018
(With Comparative Actual Amounts for Year Ended June 30, 2017)

	2018 Budget	2018 Actual	Variance - Positive (Negative)	2017 Actual
Revenues:				
Fines and forfeitures:				
Administrative assessments	$ 40,630	$ 36,677	$ (3,953)	$ 34,487
Miscellaneous:				
Investment income	160	33	(127)	186
Total revenues	40,790	36,710	(4,080)	34,673
Expenditures:				
Current:				
Judicial:				
Services and supplies	116,229	8,464	107,765	21,413
Capital outlay	-	40,328	(40,328)	-
Total expenditures	116,229	48,792	67,437	21,413
Excess (deficiency) of revenues over expenditures	(75,439)	(12,082)	63,357	13,260
Fund balance:				
Beginning of year	75,439	95,032	19,593	81,772
End of year	$ -	$ 82,950	$ 82,950	$ 95,032

LINCOLN COUNTY, NEVADA
NONMAJOR FORFEITURE SPECIAL REVENUE FUND
COMPARATIVE BALANCE SHEETS
June 30, 2018 and 2017

	2018	2017
ASSETS		
Pooled cash and investments	$ 48,458	$ 51,018
Interest receivable	88	120
Due from other governments	9,974	-
Total assets	$ 58,520	$ 51,138
LIABILITIES		
Accounts payable	$ -	$ -
FUND BALANCE		
Restricted	58,520	51,138
Total liabilities and fund balance	$ 58,520	$ 51,138

LINCOLN COUNTY, NEVADA
NONMAJOR FORFEITURE SPECIAL REVENUE FUND
SCHEDULE OF REVENUES, EXPENDITURES, AND CHANGES IN FUND BALANCE - BUDGET (GAAP BASIS) AND ACTUAL
Year Ended June 30, 2018
(With Comparative Actual Amounts for Year Ended June 30, 2017)

	2018 Budget	2018 Actual	Variance-Positive (Negative)	2017 Actual
Revenues:				
Fines and forfeitures:				
Other	$ 30,000	$ 22,577	$ (7,423)	$ 12,000
Miscellaneous:				
Investment income	-	19	19	126
Total revenues	30,000	22,596	(7,404)	12,126
Expenditures:				
Current:				
Public safety:				
Services and supplies	45,000	2,005	42,995	2,438
Capital outlay	-	13,209	(13,209)	-
Total expenditures	45,000	15,214	29,786	2,438
Excess (deficiency) of revenues over expenditures	(15,000)	7,382	22,382	9,688
Fund balance:				
Beginning of year	30,000	51,138	21,138	41,450
End of year	$ 15,000	$ 58,520	$ 43,520	$ 51,138

LINCOLN COUNTY, NEVADA
NONMAJOR RECORDER TECHNOLOGY SPECIAL REVENUE FUND
COMPARATIVE BALANCE SHEETS
June 30, 2018 and 2017

	2018	2017
ASSETS		
Pooled cash and investments	$ 15,994	$ 7,513
Interest receivable	29	16
Total assets	$ 16,023	$ 7,529
LIABILITIES		
Accounts payable	$ -	$ -
FUND BALANCE		
Restricted	16,023	7,529
Total liabilities and fund balance	$ 16,023	$ 7,529

LINCOLN COUNTY, NEVADA
NONMAJOR RECORDER TECHNOLOGY SPECIAL REVENUE FUND
SCHEDULE OF REVENUES, EXPENDITURES, AND CHANGES
IN FUND BALANCE - BUDGET (GAAP BASIS) AND ACTUAL
Year Ended June 30, 2018
(With Comparative Actual Amounts for Year Ended June 30, 2017)

	2018 Budget	2018 Actual	Variance-Positive (Negative)	2017 Actual
Revenues:				
Charges for services:				
User fees	$ 6,000	$ 10,688	$ 4,688	$ 6,531
Miscellaneous:				
Investment income	-	6	6	9
Total revenues	6,000	10,694	4,694	6,540
Expenditures:				
Current:				
General government:				
Services and supplies	10,000	2,200	7,800	7,375
Excess (deficiency) of revenues over expenditures	(4,000)	8,494	12,494	(835)
Fund balance:				
Beginning of year	4,000	7,529	3,529	8,364
End of year	$ -	$ 16,023	$ 16,023	$ 7,529

LINCOLN COUNTY, NEVADA
NONMAJOR L.C. HOUSING AUTHORITY SPECIAL REVENUE FUND
COMPARATIVE BALANCE SHEETS
June 30, 2018 and 2017

	2018	2017
ASSETS		
Pooled cash and investments	$ 33,149	$ 31,431
Interest receivable	56	74
Total assets	$ 33,205	$ 31,505
LIABILITIES		
Accounts payable	$ 1,058	$ 341
Accrued payroll and benefits	284	-
Total liabilities	1,342	341
FUND BALANCE		
Restricted	31,863	31,164
Total liabilities and fund balance	$ 33,205	$ 31,505

LINCOLN COUNTY, NEVADA
NONMAJOR L. C. HOUSING AUTHORITY SPECIAL REVENUE FUND
SCHEDULE OF REVENUES, EXPENDITURES, AND CHANGES
IN FUND BALANCE - BUDGET (GAAP BASIS) AND ACTUAL
Year Ended June 30, 2018
(With Comparative Actual Amounts for Year Ended June 30, 2017)

	2018		Variance - Positive	2017
	Budget	Actual	(Negative)	Actual
Revenues:				
Miscellaneous:				
Rent	$ 35,000	$ 36,760	$ 1,760	$ 32,769
Investment income	-	12	12	39
Total revenues	35,000	36,772	1,772	32,808
Expenditures:				
Current:				
Community support:				
Salaries and wages	17,000	19,910	(2,910)	20,316
Employee benefits	2,400	2,672	(272)	2,607
Services and supplies	18,637	13,491	5,146	21,127
Capital outlay	15,000	-	15,000	-
Total expenditures	53,037	36,073	16,964	44,050
Excess (deficiency) of revenues over expenditures	(18,037)	699	18,736	(11,242)
Fund balance:				
Beginning of year	38,369	31,164	(7,205)	42,406
End of year	$ 20,332	$ 31,863	$ 11,531	$ 31,164

LINCOLN COUNTY, NEVADA
NONMAJOR ALAMO CLINIC SPECIAL REVENUE FUND
COMPARATIVE BALANCE SHEETS
June 30, 2018 and 2017

	2018	2017
ASSETS		
Pooled cash and investments	$ 233	$ 11,764
Taxes receivable	1,418	1,194
Due from other governments	92	114
Total assets	$ 1,743	$ 13,072
LIABILITIES		
Accounts payable	$ 326	$ 11,454
DEFERRED INFLOWS OF RESOURCES		
Unavailable revenue - property taxes	1,164	1,021
FUND BALANCE		
Restricted	253	597
Total liabilities, deferred inflows of resources, and fund balance	$ 1,743	$ 13,072

LINCOLN COUNTY, NEVADA
NONMAJOR ALAMO CLINIC SPECIAL REVENUE FUND
SCHEDULE OF REVENUES, EXPENDITURES, AND CHANGES IN FUND BALANCE -BUDGET (GAAP BASIS) AND ACTUAL
Year Ended June 30, 2018
(With Comparative Actual Amounts for Year Ended June 30, 2017)

	2018 Budget	2018 Actual	Variance - Positive (Negative)	2017 Actual
Revenues:				
Taxes:				
Property taxes	$ 95,130	$ 92,548	$ (2,582)	$ 95,022
Intergovernmental:				
Private car line	-	172	172	-
Fish and wildlife	-	93	93	114
Total intergovernmental	-	265	265	114
Total revenues	95,130	92,813	(2,317)	95,136
Expenditures:				
Current:				
Health:				
Services and supplies	95,130	93,157	1,973	94,931
Excess (deficiency) of revenues over expenditures	-	(344)	(344)	205
Fund balance:				
Beginning of year	392	597	205	392
End of year	$ 392	$ 253	$ (139)	$ 597

LINCOLN COUNTY, NEVADA
NONMAJOR FAIR BOARD SPECIAL REVENUE FUND
COMPARATIVE BALANCE SHEETS
June 30, 2018 and 2017

	2018	2017
ASSETS		
Pooled cash and investments	$ 20,161	$ 14,144
Interest receivable	34	33
Due from other government	100	-
Total assets	$ 20,295	$ 14,177
LIABILITIES		
Accounts payable	$ 177	$ 206
FUND BALANCE		
Restricted	20,118	13,971
Total liabilities and fund balance	$ 20,295	$ 14,177

LINCOLN COUNTY, NEVADA
NONMAJOR FAIR BOARD SPECIAL REVENUE FUND
SCHEDULE OF REVENUES, EXPENDITURES, AND CHANGES
IN FUND BALANCE - BUDGET (GAAP BASIS) AND ACTUAL
Year Ended June 30, 2018
(With Comparative Actual Amounts for Year Ended June 30, 2017)

	2018 Budget	2018 Actual	Variance - Positive (Negative)	2017 Actual
Revenues:				
Miscellaneous:				
Investment income	$ -	$ 7	$ 7	$ 17
Fees	33,697	24,342	(9,355)	19,877
Donations	-	1,815	1,815	-
Total revenues	33,697	26,164	(7,533)	19,894
Expenditures:				
Current:				
Culture and recreation:				
Parks:				
Services and supplies	70,290	40,017	30,273	27,516
Excess (deficiency) of revenues over expenditures	(36,593)	(13,853)	22,740	(7,622)
Other financing sources (uses):				
Operating transfers in	20,000	20,000	-	-
Net change in fund balance	(16,593)	6,147	22,740	(7,622)
Fund balance:				
Beginning of year	16,593	13,971	(2,622)	21,593
End of year	$ -	$ 20,118	$ 20,118	$ 13,971

LINCOLN COUNTY, NEVADA
NONMAJOR MULTI-SPECIES HABITAT CONSERVATION SPECIAL REVENUE FUND
COMPARATIVE BALANCE SHEETS
June 30, 2018 and 2017

	2018	2017
ASSETS		
Pooled cash and investments	$ 21,105	$ 23,337
Interest receivable	40	55
Total assets	$ 21,145	$ 23,392
LIABILITIES		
Unearned revenue	$ 21,145	$ 23,392
Total liabilities	21,145	23,392
FUND BALANCE		
Restricted	-	-
Total liabilities and fund balance	$ 21,145	$ 23,392

LINCOLN COUNTY, NEVADA
NONMAJOR MULTI-SPECIES HABITAT CONSERVATION SPECIAL REVENUE FUND
SCHEDULE OF REVENUES, EXPENDITURES, AND CHANGES
IN FUND BALANCE - BUDGET (GAAP BASIS) AND ACTUAL
Year Ended June 30, 2018
(With Comparative Actual Amounts for Year Ended June 30, 2017)

	2018 Budget	2018 Actual	Variance - Positive (Negative)	2017 Actual
Revenues:				
Intergovernmental:				
Grants	$ 28,198	$ 2,247	$ (25,951)	$ 3,914
Miscellaneous:				
Investment income	-	8	8	35
Total revenues	28,198	2,255	(25,943)	3,949
Expenditures:				
Current:				
General government:				
Services and supplies	28,198	2,255	25,943	3,949
Excess (deficiency) of revenues over expenditures	-	-	-	-
Fund balance:				
Beginning of year	-	-	-	-
End of year	$ -	$ -	$ -	$ -

LINCOLN COUNTY, NEVADA
NONMAJOR MULTI-SPECIES HABITAT CONSERVATION SEC. 7 SPECIAL REVENUE FUND
COMPARATIVE BALANCE SHEETS
June 30, 2018 and 2017

	2018	2017
ASSETS		
Pooled cash and investments	$ 861,358	$ 860,547
Interest receivable	1,523	2,019
Total assets	$ 862,881	$ 862,566
LIABILITIES		
Accounts payable	$ -	$ -
FUND BALANCE		
Restricted	862,881	862,566
Total liabilities and fund balance	$ 862,881	$ 862,566

LINCOLN COUNTY, NEVADA
NONMAJOR MULTI-SPECIES HABITAT CONSERVATION SEC. 7 SPECIAL REVENUE FUND
SCHEDULE OF REVENUES, EXPENDITURES, AND CHANGES
IN FUND BALANCE - BUDGET (GAAP BASIS) AND ACTUAL
Year Ended June 30, 2018
(With Comparative Actual Amounts for Year Ended June 30, 2017)

	2018 Budget	2018 Actual	Variance - Positive (Negative)	2017 Actual
Revenues:				
Miscellaneous:				
Investment income	$ 5,000	$ 315	$ (4,685)	$ 1,590
Expenditures:				
Current:				
General government:				
Services and supplies	870,976	-	870,976	-
Excess (deficiency) of revenues over expenditures	(865,976)	315	866,291	1,590
Fund balance:				
Beginning of year	865,976	862,566	(3,410)	860,976
End of year	$ -	$ 862,881	$ 862,881	$ 862,566

LINCOLN COUNTY, NEVADA
NONMAJOR YOUTH ACTIVITIES COUNSEL SPECIAL REVENUE FUND
COMPARATIVE BALANCE SHEETS
June 30, 2018 and 2017

	2018	2017
ASSETS		
Pooled cash and investments	$ 6,007	$ 6,007
LIABILITIES		
Accrued payroll and benefits	$ -	$ -
FUND BALANCE		
Restricted	6,007	6,007
Total liabilities and fund balance	$ 6,007	$ 6,007

LINCOLN COUNTY, NEVADA
NONMAJOR YOUTH ACTIVITIES COUNSEL SPECIAL REVENUE FUND
SCHEDULE OF REVENUES, EXPENDITURES, AND CHANGES
IN FUND BALANCE - BUDGET (GAAP BASIS) AND ACTUAL
Year Ended June 30, 2018
(With Comparative Actual Amounts for Year Ended June 30, 2017)

	2018		Variance - Positive	2017
	Budget	Actual	(Negative)	Actual
Revenues:				
Miscellaneous:	$ -	$ -	$ -	$ -
Expenditures:				
Current:				
Community support:				
Services and supplies	6,007	-	6,007	-
Excess (deficiency) of revenues over expenditures	(6,007)	-	6,007	-
Fund balance:				
Beginning of year	6,007	6,007	-	6,007
End of year	$ -	$ 6,007	$ 6,007	$ 6,007

LINCOLN COUNTY, NEVADA
NONMAJOR GENETIC MARKER TESTING SPECIAL REVENUE FUND
COMPARATIVE BALANCE SHEETS
June 30, 2018 and 2017

	2018	2017
ASSETS		
Pooled cash and investments	$ 3,192	$ 3,689
LIABILITIES		
Accounts payable	$ 1,850	$ 2,236
FUND BALANCE		
Restricted	1,342	1,453
Total liabilities and fund balance	$ 3,192	$ 3,689

LINCOLN COUNTY, NEVADA
NONMAJOR GENETIC MARKER TESTING SPECIAL REVENUE FUND
SCHEDULE OF REVENUES, EXPENDITURES, AND CHANGES
IN FUND BALANCE - BUDGET (GAAP BASIS) AND ACTUAL
Year Ended June 30, 2018
(With Comparative Actual Amounts for Year Ended June 30, 2017)

	2018 Budget	2018 Actual	Variance - Positive (Negative)	2017 Actual
Revenues:				
Charges for services:				
Other	$ 12,000	$ 12,227	$ 227	$ 12,829
Expenditures:				
Current:				
General government:				
Services and supplies	12,000	12,338	(338)	11,376
Excess (deficiency) of revenues over expenditures	-	(111)	(111)	1,453
Fund balance:				
Beginning of year	-	1,453	1,453	-
End of year	$ -	$ 1,342	$ 1,342	$ 1,453

LINCOLN COUNTY, NEVADA
NONMAJOR PUBLIC IMPROVEMENT SPECIAL REVENUE FUND
COMPARATIVE BALANCE SHEETS
June 30, 2018 and 2017

	2018	2017
ASSETS		
Pooled cash and investments	$ 142,335	$ 142,203
Interest receivable	254	334
Total assets	$ 142,589	$ 142,537
FUND BALANCE		
Restricted	$ 142,589	$ 142,537

LINCOLN COUNTY, NEVADA
NONMAJOR PUBLIC IMPROVEMENT SPECIAL REVENUE FUND
SCHEDULE OF REVENUES, EXPENDITURES, AND CHANGES
IN FUND BALANCE - BUDGET (GAAP BASIS) AND ACTUAL
Year Ended June 30, 2018
(With Comparative Actual Amounts for Year Ended June 30, 2017)

	2018		Variance - Positive	2017
	Budget	Actual	(Negative)	Actual
Revenues:				
Miscellaneous:				
Interest	$ -	$ 52	$ 52	$ 263
Expenditures:				
Current:				
Public works:				
Services and supplies	142,274	-	142,274	-
Excess (deficiency) of revenues over expenditures	(142,274)	52	142,326	263
Fund balance:				
Beginning of year	142,274	142,537	263	142,274
End of year	$ -	$ 142,589	$ 142,589	$ 142,537

LINCOLN COUNTY, NEVADA
NONMAJOR AIRPORT SPECIAL REVENUE FUND
COMPARATIVE BALANCE SHEETS
June 30, 2018 and 2017

	2018	2017
ASSETS		
Pooled cash and investments	$ 259	$ 10,691
Due from other governments	120	-
Total assets	$ 379	$ 10,691
LIABILITIES		
Accounts payable	$ 648	$ 10,665
FUND BALANCE		
Committed	(269)	26
Total liabilities and fund balance	$ 379	$ 10,691

LINCOLN COUNTY, NEVADA
NONMAJOR AIRPORT SPECIAL REVENUE FUND
SCHEDULE OF REVENUES, EXPENDITURES, AND CHANGES IN FUND BALANCE - BUDGET (GAAP BASIS) AND ACTUAL
Year Ended June 30, 2018
(With Comparative Actual Amounts for Year Ended June 30, 2017)

	2018 Budget	2018 Actual	Variance - Positive (Negative)	2017 Actual
Revenues:				
Charges for services:				
Airport fees	$ 400	$ 1,180	$ 780	$ 887
Miscellaneous:				
Rents	9,100	7,318	(1,782)	17,563
Total revenues	9,500	8,498	(1,002)	18,450
Expenditures:				
Current:				
Public works:				
Employee benefits	400	493	(93)	448
Services and supplies	9,400	8,300	1,100	10,760
Capital outlay	-	-	-	9,855
Total expenditures	9,800	8,793	1,007	21,063
Excess (deficiency) of revenues over expenditures	(300)	(295)	5	(2,613)
Fund balance:				
Beginning of year	439	26	(413)	2,639
End of year	$ 139	$ (269)	$ (408)	$ 26

LINCOLN COUNTY, NEVADA
NONMAJOR PANACA TOWN BUILDING SPECIAL REVENUE FUND
COMPARATIVE BALANCE SHEETS
June 30, 2018 and 2017

	2018	2017
ASSETS		
Pooled cash and investments	$ 44,706	$ 34,122
Interest receivable	82	80
Total assets	$ 44,788	$ 34,202
LIABILITIES		
Accounts payable	$ -	$ -
FUND BALANCE		
Committed	44,788	34,202
Total liabilities and fund balance	$ 44,788	$ 34,202

LINCOLN COUNTY, NEVADA
NONMAJOR PANACA TOWN BUILDING SPECIAL REVENUE FUND
SCHEDULE OF REVENUES, EXPENDITURES, AND CHANGES
IN FUND BALANCE - BUDGET (GAAP BASIS) AND ACTUAL
Year Ended June 30, 2018
(With Comparative Actual Amounts for Year Ended June 30, 2017)

	2018 Budget	2018 Actual	Variance - Positive (Negative)	2017 Actual
Revenues:				
Miscellaneous:				
Rent	$ 9,400	$ 10,569	$ 1,169	$ 10,569
Investment income	-	17	17	72
Total revenues	9,400	10,586	1,186	10,641
Expenditures:				
Current:				
General government:				
Services and supplies	-	-	-	4,367
Capital outlay	15,000	-	15,000	-
Total expenditures	15,000	-	15,000	4,367
Excess (deficiency) of revenues over expenditures	(5,600)	10,586	16,186	6,274
Fund balance:				
Beginning of year	18,988	34,202	15,214	27,928
End of year	$ 13,388	$ 44,788	$ 31,400	$ 34,202

LINCOLN COUNTY, NEVADA
NONMAJOR COURT FACILITY FEES SPECIAL REVENUE FUND
COMPARATIVE BALANCE SHEETS
June 30, 2018 and 2017

	2018	2017
ASSETS		
Pooled cash and investments	$ 71,427	$ 130,892
Interest receivable	113	299
Total assets	$ 71,540	$ 131,191
LIABILITIES		
Accounts payable	$ 2,500	$ -
FUND BALANCE		
Restricted	69,040	131,191
Total liabilities and fund balance	$ 71,540	$ 131,191

LINCOLN COUNTY, NEVADA
NONMAJOR COURT FACILITY FEES SPECIAL REVENUE FUND
SCHEDULE OF REVENUES, EXPENDITURES, AND CHANGES
IN FUND BALANCE - BUDGET (GAAP BASIS) AND ACTUAL
Year Ended June 30, 2018
(With Comparative Actual Amounts for Year Ended June 30, 2017)

	2018 Budget	2018 Actual	Variance - Positive (Negative)	2017 Actual
Revenues:				
Charges for services:				
Other	$ 45,000	$ 40,011	$ (4,989)	$ 38,062
Miscellaneous:				
Investment income	-	25	25	286
Total revenues	45,000	40,036	(4,964)	38,348
Expenditures:				
Current:				
Judicial:				
Service and supplies	-	-	-	10,586
Capital outlay	163,429	102,187	61,242	-
Total expenditures	163,429	102,187	61,242	10,586
Excess (deficiency) of revenues over expenditures	(118,429)	(62,151)	56,278	27,762
Fund balance:				
Beginning of year	118,429	131,191	12,762	103,429
End of year	$ -	$ 69,040	$ 69,040	$ 131,191

LINCOLN COUNTY, NEVADA
NONMAJOR TRI-COUNTY WEED CONTROL SPECIAL REVENUE FUND
COMPARATIVE BALANCE SHEETS
June 30, 2018 and June 30, 2017

	2018	2017
ASSETS		
Pooled cash and investments	$ 249,375	$ 235,570
Interest receivable	399	552
Due from other governments	-	3,721
Total assets	$ 249,774	$ 239,843
LIABILITIES		
Accounts payable	$ 26,503	$ 27,539
Accrued payroll and benefits	32,433	24,066
Total liabilities	58,936	51,605
FUND BALANCE		
Restricted	190,838	188,238
Total liabilities and fund balance	$ 249,774	$ 239,843

LINCOLN COUNTY, NEVADA
NONMAJOR TRI-COUNTY WEED CONTROL SPECIAL REVENUE FUND
SCHEDULE OF REVENUES, EXPENDITURES, AND CHANGES
IN FUND BALANCE - BUDGET (GAAP BASIS) AND ACTUAL
Year Ended June 30, 2018
(With Comparative Actual Amounts for Year Ended June 30, 2017)

	2018 Budget	2018 Actual	Variance - Positive (Negative)	2017 Actual
Revenues:				
Charges for services:				
Weed control	$ 1,100,000	$ 789,559	$ (310,441)	$ 797,614
Miscellaneous:				
Investment income	400	82	(318)	77
Total revenues	1,100,400	789,641	(310,759)	797,691
Expenditures:				
Current:				
General government:				
Salaries and wages	409,150	301,082	108,068	360,931
Employee benefits	150,387	102,808	47,579	122,219
Services and supplies	550,000	358,820	191,180	369,658
Capital outlay	150,000	24,331	125,669	125,085
Total expenditures	1,259,537	787,041	472,496	977,893
Excess (deficiency) of revenues over expenditures	(159,137)	2,600	161,737	(180,202)
Fund balance:				
Beginning of year	192,235	188,238	(3,997)	368,440
End of year	$ 33,098	$ 190,838	$ 157,740	$ 188,238

LINCOLN COUNTY, NEVADA
NONMAJOR LINCOLN COUNTY LAND ACT
GENERAL SPECIAL REVENUE FUND
COMPARATIVE BALANCE SHEETS
June 30, 2018 and 2017

	2018	2017
ASSETS		
Pooled cash and investments	$ 6,566	$ 6,558
Interest receivable	9	15
Total assets	$ 6,575	$ 6,573
FUND BALANCE		
Committed	$ 6,575	$ 6,573

LINCOLN COUNTY, NEVADA
NONMAJOR LINCOLN COUNTY LAND ACT
GENERAL SPECIAL REVENUE FUND
SCHEDULE OF REVENUES, EXPENDITURES, AND CHANGES IN FUND BALANCE - BUDGET (GAAP BASIS) AND ACTUAL
Year Ended June 30, 2018
(With Comparative Actual Amounts for Year Ended June 30, 2017)

	2018			
	Budget	Actual	Variance - Positive (Negative)	2017 Actual
Revenues:				
Miscellaneous:				
Investment income	$ -	$ 2	$ 2	$ 12
Expenditures:				
Current:				
General government:				
Services and supplies	6,561	-	6,561	-
Excess (deficiency) of revenues over expenditures	(6,561)	2	6,563	12
Fund balance:				
Beginning of year	6,561	6,573	12	6,561
End of year	$ -	$ 6,575	$ 6,575	$ 6,573

LINCOLN COUNTY, NEVADA
NONMAJOR LINCOLN COUNTY LAND ACT
PLANNING AND DEVELOPMENT SPECIAL REVENUE FUND
COMPARATIVE BALANCE SHEETS
June 30, 2018 and 2017

	2018	2017
ASSETS		
Pooled cash and investments	$ 668	$ 666
Interest receivable	-	2
Total assets	$ 668	$ 668
LIABILITIES		
Accounts payable	$ -	$ -
FUND BALANCE		
Committed	668	668
Total liabilities and fund balance	$ 668	$ 668

LINCOLN COUNTY, NEVADA
NONMAJOR LINCOLN COUNTY LAND ACT
PLANNING AND DEVELOPMENT SPECIAL REVENUE FUND
SCHEDULE OF REVENUES, EXPENDITURES, AND CHANGES
IN FUND BALANCE - BUDGET (GAAP BASIS) AND ACTUAL
Year Ended June 30, 2018
(With Comparative Actual Amounts for Year Ended June 30, 2017)

	2018		Variance - Positive	2017
	Budget	Actual	(Negative)	Actual
Revenues:				
Miscellaneous:				
Investment income	$ -	$ -	$ -	$ (169)
Expenditures:				
Current:				
General government:				
Services and supplies	-	-	-	-
Excess (deficiency) of revenues over expenditures	-	-	-	(169)
Other financing sources (uses):				
Operating transfers in	-	-	-	600
Operating transfers out	-	-	-	(213,543)
Total other financing sources (uses)	-	-	-	(212,943)
Net change in fund balance	-	-	-	(213,112)
Fund balance:				
Beginning of year	337	668	331	213,780
End of year	$ 337	$ 668	$ 331	$ 668

LINCOLN COUNTY, NEVADA
NONMAJOR LINCOLN COUNTY LAND ACT
EDUCATION SPECIAL REVENUE FUND
COMPARATIVE BALANCE SHEETS
June 30, 2018 and 2017

	2018	2017
ASSETS		
Pooled cash and investments	$ 124,582	$ 124,463
Interest receivable	219	292
Total assets	$ 124,801	$ 124,755
LIABILITIES		
Accounts payable	$ -	$ -
FUND BALANCE		
Committed	124,801	124,755
Total liabilities and fund balance	$ 124,801	$ 124,755

LINCOLN COUNTY, NEVADA
NONMAJOR LINCOLN COUNTY LAND ACT
EDUCATION SPECIAL REVENUE FUND
SCHEDULE OF REVENUES, EXPENDITURES, AND CHANGES
IN FUND BALANCE - BUDGET (GAAP BASIS) AND ACTUAL
Year Ended June 30, 2018
(With Comparative Actual Amounts for Year Ended June 30, 2017)

	2018			2017
	Budget	Actual	Variance - Positive (Negative)	Actual
Revenues:				
Miscellaneous:				
Investment income	$ -	$ 46	$ 46	$ 230
Expenditures:				
Current:				
General government:				
Services and supplies	124,525	-	124,525	-
Excess (deficiency) of revenues over expenditures	(124,525)	46	124,571	230
Fund balance:				
Beginning of year	124,525	124,755	230	124,525
End of year	$ -	$ 124,801	$ 124,801	$ 124,755

LINCOLN COUNTY, NEVADA
NONMAJOR LINCOLN COUNTY LAND ACT
GRANT MATCH SPECIAL REVENUE FUND
COMPARATIVE BALANCE SHEETS
June 30, 2018 and 2017

	2018	2017
ASSETS		
Pooled cash and investments	$ 151	$ 151
FUND BALANCE		
Committed	$ 151	$ 151

LINCOLN COUNTY, NEVADA
NONMAJOR LINCOLN COUNTY LAND ACT
GRANT MATCH SPECIAL REVENUE FUND
SCHEDULE OF REVENUES, EXPENDITURES, AND CHANGES
IN FUND BALANCE - BUDGET (GAAP BASIS) AND ACTUAL
Year Ended June 30, 2018
(With Comparative Actual Amounts for Year Ended June 30, 2017)

	2018			
	Budget	Actual	Variance - Positive (Negative)	2017 Actual
Revenues:				
Miscellaneous:				
Investment income	$ -	$ -	$ -	$ -
Expenditures:				
Current:				
General government:				
Services and supplies	151	-	151	-
Excess (deficiency) of revenues over expenditures	(151)	-	151	-
Fund balance:				
Beginning of year	151	151	-	151
End of year	$ -	$ 151	$ 151	$ 151

LINCOLN COUNTY, NEVADA
NONMAJOR LINCOLN COUNTY WATER
GENERAL SPECIAL REVENUE FUND
COMPARATIVE BALANCE SHEETS
June 30, 2018 and 2017

	2018	2017
ASSETS		
Pooled cash and investments	$ 604	$ 604
Interest receivable	4	2
Total assets	$ 608	$ 606
LIABILITIES		
Accounts payable	$ -	$ -
FUND BALANCE		
Committed	608	606
Total liabilities and fund balance	$ 608	$ 606

LINCOLN COUNTY, NEVADA
NONMAJOR LINCOLN COUNTY WATER
GENERAL SPECIAL REVENUE FUND
SCHEDULE OF REVENUES, EXPENDITURES, AND CHANGES
IN FUND BALANCE - BUDGET (GAAP BASIS) AND ACTUAL
Year Ended June 30, 2018
(With Comparative Actual Amounts for Year Ended June 30, 2017)

	2018			
	Budget	Actual	Variance - Positive (Negative)	2017 Actual
Revenues:				
Miscellaneous:				
Investment income	$ -	$ 2	$ 2	$ (143)
Expenditures:				
Current:				
General government:				
Services and supplies	-	-	-	-
Excess (deficiency) of revenues over expenditures	-	2	2	(143)
Other financing sources (uses):				
Operating transfers out	-	-	-	(197,762)
Net change in fund balance	-	2	2	(197,905)
Fund balance:				
Beginning of year	849	606	(243)	198,511
End of year	$ 849	$ 608	$ (241)	$ 606

LINCOLN COUNTY, NEVADA
NONMAJOR LINCOLN COUNTY WATER
SPECIAL PROJECTS SPECIAL REVENUE FUND
COMPARATIVE BALANCE SHEETS
June 30, 2018 and 2017

	2018	2017
ASSETS		
Pooled cash and investments	$ 8,384	$ 8,376
Interest receivable	14	19
Total assets	$ 8,398	$ 8,395
FUND BALANCE		
Committed	$ 8,398	$ 8,395

LINCOLN COUNTY, NEVADA
NONMAJOR LINCOLN COUNTY WATER
SPECIAL PROJECTS SPECIAL REVENUE FUND
SCHEDULE OF REVENUES, EXPENDITURES, AND CHANGES
IN FUND BALANCE - BUDGET (GAAP BASIS) AND ACTUAL
Year Ended June 30, 2018
(With Comparative Actual Amounts for Year Ended June 30, 2017)

	2018		Variance - Positive	2017
	Budget	Actual	(Negative)	Actual
Revenues:				
Miscellaneous:				
Investment income	$ -	$ 3	$ 3	$ 15
Expenditures:				
Current:				
General government:				
Services and supplies	8,380	-	8,380	-
Excess (deficiency) of revenues over expenditures	(8,380)	3	8,383	15
Fund balance:				
Beginning of year	8,380	8,395	15	8,380
End of year	$ -	$ 8,398	$ 8,398	$ 8,395

LINCOLN COUNTY, NEVADA
NONMAJOR LINCOLN COUNTY WATER
PLANNING AND DEVELOPMENT SPECIAL REVENUE FUND
COMPARATIVE BALANCE SHEETS
June 30, 2018 and 2017

	2018	2017
ASSETS		
Pooled cash and investments	$ 83,166	$ 83,089
Interest receivable	148	195
Total assets	$ 83,314	$ 83,284
FUND BALANCE		
Committed	$ 83,314	$ 83,284

LINCOLN COUNTY, NEVADA
NONMAJOR LINCOLN COUNTY WATER
PLANNING AND DEVELOPMENT SPECIAL REVENUE FUND
SCHEDULE OF REVENUES, EXPENDITURES, AND CHANGES
IN FUND BALANCE - BUDGET (GAAP BASIS) AND ACTUAL
Year Ended June 30, 2018
(With Comparative Actual Amounts for Year Ended June 30, 2017)

	2018			
	Budget	Actual	Variance - Positive (Negative)	2017 Actual
Revenues:				
Miscellaneous:				
Investment income	$ 50	$ 30	$ (20)	$ 141
Expenditures:				
Current:				
General government:				
Services and supplies	-	-	-	-
Excess (deficiency) of revenues over expenditures	50	30	(20)	141
Other financing sources (uses):				
Operating transfers out	-	-	-	(7,998)
Net change in fund balance	50	30	(20)	(7,857)
Fund balance:				
Beginning of year	385	83,284	82,899	91,141
End of year	$ 435	$ 83,314	$ 82,879	$ 83,284

LINCOLN COUNTY, NEVADA
NONMAJOR LINCOLN COUNTY WATER SPECIAL USE SPECIAL REVENUE FUND
COMPARATIVE BALANCE SHEETS
June 30, 2018 and 2017

	2018	2017
ASSETS		
Pooled cash and investments	$ 1,163,802	$ 1,152,736
Interest receivable	2,064	2,705
Interfund receivable	190,000	200,000
Total assets	$ 1,355,866	$ 1,355,441
FUND BALANCE		
Committed	$ 1,355,866	$ 1,355,441

LINCOLN COUNTY, NEVADA
NONMAJOR LINCOLN COUNTY WATER SPECIAL USE SPECIAL REVENUE FUND
SCHEDULE OF REVENUES, EXPENDITURES, AND CHANGES
IN FUND BALANCE - BUDGET (GAAP BASIS) AND ACTUAL
Year Ended June 30, 2018
(With Comparative Actual Amounts for Year Ended June 30, 2017)

	2018		Variance - Positive	2017
	Budget	Actual	(Negative)	Actual
Revenues:				
Miscellaneous:				
Investment income	$ 500	$ 425	$ (75)	$ 1,728
Expenditures:				
Current:				
General government:				
Services and supplies	1,354,713	-	1,354,713	-
Excess (deficiency) of revenues over expenditures	(1,354,213)	425	1,354,638	1,728
Fund balance:				
Beginning of year	1,354,213	1,355,441	1,228	1,353,713
End of year	$ -	$ 1,355,866	$ 1,355,866	$ 1,355,441

LINCOLN COUNTY, NEVADA
NONMAJOR LINCOLN COUNTY WATER
GRANT MATCH SPECIAL REVENUE FUND
COMPARATIVE BALANCE SHEETS
June 30, 2018 and 2017

	2018	2017
ASSETS		
Pooled cash and investments	$ 83,104	$ 83,027
Interest receivable	149	195
Total assets	$ 83,253	$ 83,222
FUND BALANCE		
Committed	$ 83,253	$ 83,222

LINCOLN COUNTY, NEVADA
NONMAJOR LINCOLN COUNTY WATER
GRANT MATCH SPECIAL REVENUE FUND
SCHEDULE OF REVENUES, EXPENDITURES, AND CHANGES
IN FUND BALANCE - BUDGET (GAAP BASIS) AND ACTUAL
Year Ended June 30, 2018
(With Comparative Actual Amounts for Year Ended June 30, 2017)

	2018 Budget	2018 Actual	Variance - Positive (Negative)	2017 Actual
Revenues:				
Miscellaneous:				
Investment income	$ 50	$ 31	$ (19)	$ 153
Expenditures:				
Current:				
General government:				
Services and supplies	83,169	-	83,169	-
Excess (deficiency) of revenues over expenditures	(83,119)	31	83,150	153
Fund balance:				
Beginning of year	83,119	83,222	103	83,069
End of year	$ -	$ 83,253	$ 83,253	$ 83,222

LINCOLN COUNTY, NEVADA
NONMAJOR LINCOLN COUNTY WATER DISTRICT
GENERAL SPECIAL REVENUE FUND
COMPARATIVE BALANCE SHEETS
June 30, 2018 and 2017

	2018	2017
ASSETS		
Pooled cash and investments	$ 433,593	$ 488,707
Interest receivable	820	735
Total assets	$ 434,413	$ 489,442
LIABILITIES		
Accounts payable	$ 2,164	$ 3,848
Accrued payroll and benefits	5,800	5,066
Total liabilities	7,964	8,914
FUND BALANCE		
Committed	426,449	480,528
Total liabilities and fund balance	$ 434,413	$ 489,442

LINCOLN COUNTY, NEVADA
NONMAJOR LINCOLN COUNTY WATER DISTRICT
GENERAL SPECIAL REVENUE FUND
SCHEDULE OF REVENUES, EXPENDITURES, AND CHANGES IN FUND BALANCE - BUDGET (GAAP BASIS) AND ACTUAL
Year Ended June 30, 2018
(With Comparative Actual Amounts for Year Ended June 30, 2017)

	2018 Budget	2018 Actual	Variance - Positive (Negative)	2017 Actual
Revenues:				
Miscellaneous:				
Other - water sales	$ -	$ -	$ -	$ 106,060
Investment income	-	(585)	(585)	(2,265)
Total revenues	-	(585)	(585)	103,795
Expenditures:				
Current:				
General government:				
Salaries and wages	90,000	81,797	8,203	82,132
Employee benefits	37,000	35,104	1,896	34,516
Services and supplies	112,000	36,593	75,407	32,741
Total general government	239,000	153,494	85,506	149,389
Excess (deficiency) of revenues over expenditures	(239,000)	(154,079)	84,921	(45,594)
Other financing sources (uses):				
Operating transfers in	100,000	100,000	-	-
Net change in fund balance	(139,000)	(54,079)	84,921	(45,594)
Fund balance:				
Beginning of year	167,210	480,528	313,318	526,122
End of year	$ 28,210	$ 426,449	$ 398,239	$ 480,528

LINCOLN COUNTY, NEVADA
NONMAJOR LINCOLN COUNTY WATER DISTRICT
PLANNING & DEVELOPMENT SPECIAL REVENUE FUND
COMPARATIVE BALANCE SHEETS
June 30, 2018 and 2017

	2018	2017
ASSETS		
Pooled cash and investments	$ 882,957	$ 890,689
Interest receivable	3,051	2,750
Total assets	$ 886,008	$ 893,439
LIABILITIES		
Accounts payable	$ 9,225	$ -
FUND BALANCE		
Committed	876,783	893,439
Total liabilities and fund balance	$ 886,008	$ 893,439

LINCOLN COUNTY, NEVADA
NONMAJOR LINCOLN COUNTY WATER DISTRICT
PLANNING & DEVELOPMENT SPECIAL REVENUE FUND
SCHEDULE OF REVENUES, EXPENDITURES, AND CHANGES IN FUND BALANCE - BUDGET (GAAP BASIS) AND ACTUAL
Year Ended June 30, 2018
(With Comparative Actual Amounts for Year Ended June 30, 2017)

	2018 Budget	2018 Actual	Variance - Positive (Negative)	2017 Actual
Revenues:				
Miscellaneous:				
Investment income	$ 10,000	$ (2,189)	$ (12,189)	$ (8,472)
Expenditures:				
Current:				
General government:				
Services and supplies	921,911	14,467	907,444	-
Excess (deficiency) of revenues over expenditures	(911,911)	(16,656)	895,255	(8,472)
Fund balance:				
Beginning of year	911,911	893,439	(18,472)	901,911
End of year	$ -	$ 876,783	$ 876,783	$ 893,439

LINCOLN COUNTY, NEVADA
NONMAJOR LINCOLN COUNTY WATER DISTRICT
SPECIAL PROJECTS SPECIAL REVENUE FUND
COMPARATIVE BALANCE SHEETS
June 30, 2018 and 2017

	2018	2017
ASSETS		
Pooled cash and investments	$ 643,796	$ 655,304
Interest receivable	2,162	1,969
Prepaid expenses	48,000	56,000
Total assets	$ 693,958	$ 713,273
LIABILITIES		
Accounts payable	$ -	$ -
FUND BALANCE		
Nonspendable	48,000	56,000
Committed	645,958	657,273
Total fund balance	693,958	713,273
Total liabilities and fund balance	$ 693,958	$ 713,273

LINCOLN COUNTY, NEVADA
NONMAJOR LINCOLN COUNTY WATER DISTRICT
SPECIAL PROJECTS SPECIAL REVENUE FUND
SCHEDULE OF REVENUES, EXPENDITURES, AND CHANGES IN FUND BALANCE - BUDGET (GAAP BASIS) AND ACTUAL
Year Ended June 30, 2018
(With Comparative Actual Amounts for Year Ended June 30, 2017)

	2018 Budget	2018 Actual	Variance - Positive (Negative)	2017 Actual
Revenues:				
Miscellaneous:				
Investment income	$ 6,000	$ (1,315)	$ (7,315)	$ (5,852)
Expenditures:				
Current:				
General government:				
Services and supplies	739,125	18,000	721,125	8,000
Excess (deficiency) of revenues over expenditures	(733,125)	(19,315)	713,810	(13,852)
Fund balance:				
Beginning of year	733,125	713,273	(19,852)	727,125
End of year	$ -	$ 693,958	$ 693,958	$ 713,273

LINCOLN COUNTY, NEVADA
NONMAJOR ASSESSOR TECHNOLOGY SPECIAL REVENUE FUND
COMPARATIVE BALANCE SHEETS
June 30, 2018 and 2017

	2018	2017
ASSETS		
Pooled cash and investments	$ 44,605	$ 62,670
FUND BALANCE		
Restricted	$ 44,605	$ 62,670

LINCOLN COUNTY, NEVADA
NONMAJOR ASSESSOR TECHNOLOGY SPECIAL REVENUE FUND
SCHEDULE OF REVENUES, EXPENDITURES, AND CHANGES
IN FUND BALANCE - BUDGET (GAAP BASIS) AND ACTUAL
Year Ended June 30, 2018
(With Comparative Actual Amounts for Year Ended June 30, 2017)

	2018		Variance - Positive	2017
	Budget	Actual	(Negative)	Actual
Revenues:				
Charges for services:				
Other	$ 18,000	$ 10,164	$ (7,836)	$ 10,443
Expenditures:				
Current:				
General government:				
Services and supplies	75,403	9,026	66,377	18,433
Capital outlay	-	19,203	(19,203)	-
Total general government	75,403	28,229	47,174	18,433
Excess (deficiency) of revenues over expenditures	(57,403)	(18,065)	39,338	(7,990)
Fund balance:				
Beginning of year	57,403	62,670	5,267	70,660
End of year	$ -	$ 44,605	$ 44,605	$ 62,670

LINCOLN COUNTY, NEVADA
NONMAJOR DISTRICT COURT TECHNOLOGY SPECIAL REVENUE FUND
COMPARATIVE BALANCE SHEETS
June 30, 2018 and 2017

	2018	2017
ASSETS		
Pooled cash and investments	$ 5,120	$ 5,120
FUND BALANCE		
Restricted	$ 5,120	$ 5,120

LINCOLN COUNTY, NEVADA
NONMAJOR DISTRICT COURT TECHNOLOGY SPECIAL REVENUE FUND
SCHEDULE OF REVENUES, EXPENDITURES, AND CHANGES
IN FUND BALANCE - BUDGET (GAAP BASIS) AND ACTUAL
Year Ended June 30, 2018
(With Comparative Actual Amounts for Year Ended June 30, 2017)

	2018		Variance - Positive	2017
	Budget	Actual	(Negative)	Actual
Revenues:				
Charges for services:	$ -	$ -	$ -	$ 32
Expenditures:				
Current:				
Judicial:				
Services and supplies	5,088	-	5,088	-
Excess (deficiency) of revenues over expenditures	(5,088)	-	5,088	32
Fund balance:				
Beginning of year	5,088	5,120	32	5,088
End of year	$ -	$ 5,120	$ 5,120	$ 5,120

LINCOLN COUNTY, NEVADA
NONMAJOR DISTRICT COURT SPECIALTY COURT SPECIAL REVENUE FUND
COMPARATIVE BALANCE SHEETS
June 30, 2018 and 2017

	2018	2017
ASSETS		
Pooled cash and investments	$ 12,248	$ 22,317
LIABILITIES		
Accounts payable	$ 2,272	$ 1,356
FUND BALANCE		
Restricted	9,976	20,961
Total liabilities and fund balance	$ 12,248	$ 22,317

LINCOLN COUNTY, NEVADA
NONMAJOR DISTRICT COURT SPECIALTY COURT SPECIAL REVENUE FUND
SCHEDULE OF REVENUES, EXPENDITURES, AND CHANGES
IN FUND BALANCE - BUDGET (GAAP BASIS) AND ACTUAL
Year Ended June 30, 2018
(With Comparative Actual Amounts for Year Ended June 30, 2017)

	2018		Variance-Positive	2017
	Budget	Actual	(Negative)	Actual
Revenues:				
Charges for services:				
Clerk fees	$ 20,463	$ 4,891	$ (15,572)	$ 14,635
Expenditures:				
Judicial:				
Services and supplies	34,719	15,876	18,843	22,043
Excess (deficiency) of revenues over expenditures	(14,256)	(10,985)	3,271	(7,408)
Fund balance:				
Beginning of year	14,256	20,961	6,705	28,369
End of year	$ -	$ 9,976	$ 9,976	$ 20,961

LINCOLN COUNTY, NEVADA
NONMAJOR COURT SECURITY FEE SPECIAL REVENUE FUND
COMPARATIVE BALANCE SHEETS
June 30, 2018 and 2017

	2018	2017
ASSETS		
Pooled cash and investments	$ 9,690	$ 8,664
Interest receivable	17	20
Total assets	$ 9,707	$ 8,684
FUND BALANCE		
Restricted	$ 9,707	$ 8,684

LINCOLN COUNTY, NEVADA
NONMAJOR COURT SECURITY FEE SPECIAL REVENUE FUND
SCHEDULE OF REVENUES, EXPENDITURES, AND CHANGES
IN FUND BALANCE - BUDGET (GAAP BASIS) AND ACTUAL
Year Ended June 30, 2018
(With Comparative Actual Amounts for Year Ended June 30, 2017)

	2018			2017
	Budget	Actual	Variance-Positive (Negative)	
Revenues:				
Charges for services:				
Clerk fees	$ 700	$ 1,020	$ 320	$ 1,020
Miscellaneous:				
Investment income	-	3	3	18
Total revenues	700	1,023	323	1,038
Expenditures:				
Judicial:				
Services and supplies	9,046	-	9,046	-
Excess (deficiency) of revenues over expenditures	(8,346)	1,023	9,369	1,038
Fund balance:				
Beginning of year	8,346	8,684	338	7,646
End of year	$ -	$ 9,707	$ 9,707	$ 8,684

LINCOLN COUNTY, NEVADA
NONMAJOR DISTRICT COURT ENRICHMENT SPECIAL REVENUE FUND
COMPARATIVE BALANCE SHEETS
June 30, 2018 and 2017

	2018	2017
ASSETS		
Pooled cash and investments	$ 43,591	$ 37,751
Interest receivable	78	87
Total assets	$ 43,669	$ 37,838
FUND BALANCE		
Restricted	$ 43,669	$ 37,838

LINCOLN COUNTY, NEVADA
NONMAJOR DISTRICT COURT ENRICHMENT SPECIAL REVENUE FUND
SCHEDULE OF REVENUES, EXPENDITURES, AND CHANGES
IN FUND BALANCE - BUDGET (GAAP BASIS) AND ACTUAL
Year Ended June 30, 2018
(With Comparative Actual Amounts for Year Ended June 30, 2017)

	2018			2017
	Budget	Actual	Variance-Positive (Negative)	
Revenues:				
Charges for services:				
Clerk fees	$ 3,500	$ 5,815	$ 2,315	$ 6,038
Miscellaneous:				
Investment income	-	16	16	75
Total revenues	3,500	5,831	2,331	6,113
Expenditures:				
Current:				
Judicial:				
Services and supplies	41,077	-	41,077	-
Capital outlay	-	-	-	2,352
Total expenditures	41,077	-	41,077	2,352
Excess (deficiency) of revenues over expenditures	(37,577)	5,831	43,408	3,761
Fund balance:				
Beginning of year	37,577	37,838	261	34,077
End of year	$ -	$ 43,669	$ 43,669	$ 37,838

LINCOLN COUNTY, NEVADA
NONMAJOR FUND - NUCLEAR WASTE SPECIAL REVENUE FUND
COMPARATIVE BALANCE SHEETS
June 30, 2018 and 2017

	2018	2017
ASSETS		
Pooled cash and investments	$ 2,099	$ 36,870
Interest receivable	3	87
Total assets	$ 2,102	$ 36,957
LIABILITIES		
Accounts payable	$ 1,100	$ 643
Accrued payroll and benefits	-	2,806
Unearned revenue	1,002	33,508
Total liabilities	2,102	36,957
FUND BALANCE		
Restricted	-	-
Total liabilities and fund balance	$ 2,102	$ 36,957

LINCOLN COUNTY, NEVADA
NONMAJOR FUND - NUCLEAR WASTE SPECIAL REVENUE FUND
SCHEDULE OF REVENUES, EXPENDITURES, AND CHANGES
IN FUND BALANCE - BUDGET (GAAP BASIS) AND ACTUAL
Year Ended June 30, 2018
(With Comparative Actual Amounts for Year Ended June 30, 2017)

	2018 Budget	2018 Actual	Variance - Positive (Negative)	2017 Actual
Revenues:				
Intergovernmental:				
Grants	$ -	$ 32,506	$ 32,506	$ 36,561
Miscellaneous:				
Investment income	-	1	1	-
Total revenues	-	32,507	32,507	36,561
Expenditures:				
Current:				
General government:				
Salaries and wages	25,000	15,309	9,691	36,741
Employee benefits	-	9,014	(9,014)	21,532
Services and supplies	11,784	8,184	3,600	13,288
Total expenditures	36,784	32,507	4,277	71,561
Excess (deficiency) of revenues over expenditures	(36,784)	-	36,784	(35,000)
Other financing sources (uses):				
Operating transfers in:				
Federal in lieu	-	-	-	35,000
Net change in fund balance	(36,784)	-	36,784	-
Fund balance:				
Beginning of year	36,784	-	(36,784)	-
End of year	$ -	$ -	$ -	$ -

LINCOLN COUNTY, NEVADA
NONMAJOR FUND - PROPERTY MANAGEMENT SPECIAL REVENUE FUND
COMPARATIVE BALANCE SHEETS
June 30, 2018 and 2017

	2018	2017
ASSETS		
Pooled cash and investments	$ 59,808	$ 56,419
LIABILITIES		
Accounts payable	$ 3,874	$ 7,150
Accrued payroll and benefits	676	518
Total liabilities	4,550	7,668
FUND BALANCE		
Committed for general government	55,258	48,751
Total liabilities and fund balance	$ 59,808	$ 56,419

LINCOLN COUNTY, NEVADA
NONMAJOR FUND - PROPERTY MANAGEMENT SPECIAL REVENUE FUND
SCHEDULE OF REVENUES, EXPENDITURES, AND CHANGES
IN FUND BALANCE - BUDGET (GAAP BASIS) AND ACTUAL
Year Ended June 30, 2018
(With Comparative Actual Amounts for Year Ended June 30, 2017)

	2018		Variance-Positive	2017
	Budget	Actual	(Negative)	Actual
Revenues:				
Miscellaneous:				
Rent	$ 18,000	$ 15,585	$ (2,415)	$ 18,705
Expenditures:				
General government:				
Salaries and wages	22,318	17,415	4,903	14,409
Employee benefits	5,604	3,230	2,374	2,263
Services and supplies	35,280	28,433	6,847	20,487
Total expenditures	63,202	49,078	14,124	37,159
Excess (deficiency) of revenues over expenditures	(45,202)	(33,493)	11,709	(18,454)
Other financing sources (uses):				
Operating transfer in	40,000	40,000	-	40,000
Net change in fund balance	(5,202)	6,507	11,709	21,546
Fund balance:				
Beginning of year	34,456	48,751	14,295	27,205
End of year	$ 29,254	$ 55,258	$ 26,004	$ 48,751

LINCOLN COUNTY, NEVADA
INTERNALLY REPORTED (BUDGETARY BASIS) FUNDS REPORTED AS PART OF THE GENERAL FUND FOR EXTERNAL REPORTING PURPOSES
COMBINING BALANCE SHEET
JUNE 30, 2018
(With Comparative Actual Amounts for 2017)

	Stabilization	Planning	Rachel Jones Memorial Cemetery	Flood Control
ASSETS				
Pooled cash and investments	$ 130,674	$ 35,365	$ 827	$ 40,825
Interest receivable	230	61	-	-
Due from others	-	-	-	-
Total assets	$ 130,904	$ 35,426	$ 827	$ 40,825
LIABILITIES				
Accounts payable	$ -	$ 6,237	$ -	$ -
Accrued payroll and benefits	-	2,068	-	-
Total liabilities	-	8,305	-	-
FUND BALANCE				
Restricted for:				
Stabilization	130,904	-	-	-
Rachel Jones Cemetery	-	-	827	-
General government	-	-	-	-
Committed for:				
Planning	-	27,121	-	-
Flood Control	-	-	-	40,825
Land Act	-	-	-	-
Water	-	-	-	-
Total fund balance	130,904	27,121	827	40,825
Total liabilities and fund balance	$ 130,904	$ 35,426	$ 827	$ 40,825

Special Projects	Lincoln County Land Act Emergency Disaster	Lincoln County Water Emergency Disaster	Totals 2018	Totals 2017
$ 193,424	$ 64,608	$ 63,331	$ 529,054	$ 802,956
341	115	111	858	1,780
27,652	-	-	27,652	-
$ 221,417	$ 64,723	$ 63,442	$ 557,564	$ 804,736
$ 12,850	$ -	$ -	$ 19,087	$ 6,520
-	-	-	2,068	2,002
12,850	-	-	21,155	8,522
-	-	-	130,904	130,856
-	-	-	827	827
208,567	-	-	208,567	472,187
-	-	-	27,121	22,448
-	-	-	40,825	41,730
-	64,723	-	64,723	64,748
-	-	63,442	63,442	63,418
208,567	64,723	63,442	536,409	796,214
$ 221,417	$ 64,723	$ 63,442	$ 557,564	$ 804,736

LINCOLN COUNTY, NEVADA
INTERNALLY REPORTED (BUDGETARY BASIS) FUNDS REPORTED AS PART OF THE GENERAL FUND FOR EXTERNAL REPORTING PURPOSES
COMBINING SCHEDULE OF REVENUES, EXPENDITURES, AND CHANGES IN FUND BALANCES
Year Ended June 30, 2018
(With Comparative Actual Amounts for the Year Ended June 30, 2017)

	Stabilization	Planning	Rachel Jones Memorial Cemetery	Flood Control
Revenues:				
Charges for services	$ -	$ 10,901	$ -	$ -
Miscellaneous	48	13	-	-
Total revenues	48	10,914	-	-
Expenditures:				
General government	-	-	-	-
Public works	-	81,241	-	905
Total expenditures	-	81,241	-	905
Excess (deficiency) of revenues over expenditures	48	(70,327)	-	(905)
Other financing sources (uses):				
Operating transfers in	-	75,000	-	-
Operating transfers out	-	-	-	-
Total other financing sources (uses)	-	75,000	-	-
Net change in fund balance	48	4,673	-	(905)
Fund balance:				
Beginning of year	130,856	22,448	827	41,730
End of year	$ 130,904	$ 27,121	$ 827	$ 40,825

Special Projects	Lincoln County Land Act Emergency Disaster	Lincoln County Water Emergency Disaster	Totals 2018	Totals 2017
$ -	$ -	$ -	$ 10,901	$ 10,622
27,723	24	24	27,832	1,557
27,723	24	24	38,733	12,179
42,843	49	-	42,892	44,097
-	-	-	82,146	81,722
42,843	49	-	125,038	125,819
(15,120)	(25)	24	(86,305)	(113,640)
130,000	-	-	205,000	320,000
(378,500)	-	-	(378,500)	(40,000)
(248,500)	-	-	(173,500)	280,000
(263,620)	(25)	24	(259,805)	166,360
472,187	64,748	63,418	796,214	629,854
$ 208,567	$ 64,723	$ 63,442	$ 536,409	$ 796,214

LINCOLN COUNTY, NEVADA
STABILIZATION
INTERNALLY REPORTED (BUDGETARY BASIS) FUND REPORTED
AS PART OF THE GENERAL FUND FOR EXTERNAL REPORTING PURPOSES
COMPARATIVE BALANCE SHEETS
June 30, 2018 and 2017

	2018	2017
ASSETS		
Pooled cash and investments	$ 130,674	$ 130,550
Interest receivable	230	306
Total assets	$ 130,904	$ 130,856
FUND BALANCE		
Restricted for stabilization	$ 130,904	$ 130,856

LINCOLN COUNTY, NEVADA
STABILIZATION
INTERNALLY REPORTED (BUDGETARY BASIS) FUND REPORTED
AS PART OF THE GENERAL FUND FOR EXTERNAL REPORTING PURPOSES
SCHEDULE OF REVENUES, EXPENDITURES AND CHANGES IN FUND BALANCE
BUDGET (GAAP BASIS) AND ACTUAL
Year Ended June 30, 2018
(With Comparative Actual Amounts for Year Ended June 30, 2017)

	2018		Variance - Positive	2017
	Budget	Actual	(Negative)	Actual
Revenues:				
Miscellaneous:				
Investment income	$ 50	$ 48	$ (2)	$ 241
Expenditures:				
Current:				
General government:				
Service and supplies	130,715	-	130,715	-
Excess (deficiency) of revenues over expenditures	(130,665)	48	130,713	241
Fund balance:				
Beginning of year	130,665	130,856	191	130,615
End of year	$ -	$ 130,904	$ 130,904	$ 130,856

LINCOLN COUNTY, NEVADA
PLANNING
INTERNALLY REPORTED (BUDGETARY BASIS) FUND REPORTED
AS PART OF THE GENERAL FUND FOR EXTERNAL REPORTING PURPOSES
COMPARATIVE BALANCE SHEETS
June 30, 2018 and 2017

	2018	2017
ASSETS		
Pooled cash and investments	$ 35,365	$ 30,900
Interest receivable	61	70
Total assets	$ 35,426	$ 30,970
LIABILITIES		
Accounts payable	$ 6,237	$ 6,520
Accrued payroll and benefits	2,068	2,002
Total liabilities	8,305	8,522
FUND BALANCE		
Committed for planning	27,121	22,448
Total liabilities and fund balance	$ 35,426	$ 30,970

LINCOLN COUNTY, NEVADA
PLANNING
INTERNALLY REPORTED (BUDGETARY BASIS) FUND REPORTED AS PART OF THE GENERAL FUND FOR EXTERNAL REPORTING PURPOSES
SCHEDULE OF REVENUES, EXPENDITURES, AND CHANGES IN FUND BALANCE - BUDGET (GAAP BASIS) AND ACTUAL
Year Ended June 30, 2018
(With Comparative Actual Amounts for Year Ended June 30, 2017)

	2018 Budget	2018 Actual	Variance-Positive (Negative)	2017 Actual
Revenues:				
Charges for services:				
Planning fees	$ 16,000	$ 10,901	$ (5,099)	$ 10,622
Miscellaneous:				
Investment income	-	13	13	(10)
Total revenues	16,000	10,914	(5,086)	10,612
Expenditures:				
Current:				
Public works:				
Salaries and wages	68,747	60,924	7,823	56,377
Employee benefits	21,622	13,469	8,153	13,205
Services and supplies	9,538	6,848	2,690	11,235
Total expenditures	99,907	81,241	18,666	80,817
Excess (deficiency) of revenues over expenditures	(83,907)	(70,327)	13,580	(70,205)
Other financing sources (uses):				
Operating transfer in	75,000	75,000	-	75,000
Net change in fund balance	(8,907)	4,673	13,580	4,795
Fund balance:				
Beginning of year	8,907	22,448	13,541	17,653
End of year	$ -	$ 27,121	$ 27,121	$ 22,448

LINCOLN COUNTY, NEVADA
RACHEL JONES MEMORIAL CEMETERY
INTERNALLY REPORTED (BUDGETARY BASIS) FUND REPORTED
AS PART OF THE GENERAL FUND FOR EXTERNAL REPORTING PURPOSES
COMPARATIVE BALANCE SHEETS
June 30, 2018 and 2017

	2018	2017
ASSETS		
Pooled cash and investments	$ 827	$ 827
FUND BALANCE		
Restricted for Rachel Jones Cemetery	$ 827	$ 827

LINCOLN COUNTY, NEVADA
RACHEL JONES MEMORIAL CEMETERY
INTERNALLY REPORTED (BUDGETARY BASIS) FUND REPORTED
AS PART OF THE GENERAL FUND FOR EXTERNAL REPORTING PURPOSES
SCHEDULE OF REVENUES, EXPENDITURES, AND CHANGES
IN FUND BALANCE - BUDGET (GAAP BASIS) AND ACTUAL
Year Ended June 30, 2018
(With Comparative Actual Amounts for Year Ended June 30, 2017)

	2018			2017
	Budget	Actual	Variance - Positive (Negative)	Actual
Revenues:				
Miscellaneous:	$ -	$ -	$ -	$ -
Expenditures:				
Health:				
Services and supplies	827	-	827	-
Excess (deficiency) of revenues over expenditures	(827)	-	827	-
Fund balance:				
Beginning of year	827	827	-	827
End of year	$ -	$ 827	$ 827	$ 827

LINCOLN COUNTY, NEVADA
FLOOD CONTROL
INTERNALLY REPORTED (BUDGETARY BASIS) FUND REPORTED
AS PART OF THE GENERAL FUND FOR EXTERNAL REPORTING PURPOSES
COMPARATIVE BALANCE SHEETS
June 30, 2018 and 2017

	2018	2017
ASSETS		
Pooled cash and investments	$ 40,825	$ 41,730
LIABILITIES		
Accounts payable	$ -	$ -
FUND BALANCE		
Committed for flood control	40,825	41,730
Total liabilities and fund balance	$ 40,825	$ 41,730

LINCOLN COUNTY, NEVADA
FLOOD CONTROL
INTERNALLY REPORTED (BUDGETARY BASIS) FUND REPORTED
AS PART OF THE GENERAL FUND FOR EXTERNAL REPORTING PURPOSES
SCHEDULE OF REVENUES, EXPENDITURES, AND CHANGES
IN FUND BALANCE - BUDGET (GAAP BASIS) AND ACTUAL
Year Ended June 30, 2018
(With Comparative Actual Amounts for Year Ended June 30, 2017)

	2018 Budget	2018 Actual	Variance-Positive (Negative)	2017 Actual
Revenues:	$ -	$ -	$ -	$ -
Expenditures:				
Current:				
Public works:				
Services and supplies	20,000	905	19,095	905
Excess (deficiency) of revenues over expenditures	(20,000)	(905)	19,095	(905)
Other financing sources (uses):				
Operating transfers in	-	-	-	30,000
Net change in fund balance	(20,000)	(905)	19,095	29,095
Fund balance:				
Beginning of year	20,000	41,730	21,730	12,635
End of year	$ -	$ 40,825	$ 40,825	$ 41,730

LINCOLN COUNTY, NEVADA
SPECIAL PROJECTS
INTERNALLY REPORTED (BUDGETARY BASIS) FUND REPORTED
AS PART OF THE GENERAL FUND FOR EXTERNAL REPORTING PURPOSES
COMPARATIVE BALANCE SHEETS
June 30, 2018 and 2017

	2018	2017
ASSETS		
Pooled cash and investments	$ 193,424	$ 471,082
Interest receivable	341	1,105
Due from others	27,652	-
Total assets	$ 221,417	$ 472,187
LIABILITIES		
Accounts payable	$ 12,850	$ -
FUND BALANCE		
Restricted	208,567	472,187
Total liabilities and fund balance	$ 221,417	$ 472,187

LINCOLN COUNTY, NEVADA
SPECIAL PROJECTS
INTERNALLY REPORTED (BUDGETARY BASIS) FUND REPORTED
AS PART OF THE GENERAL FUND FOR EXTERNAL REPORTING PURPOSES
SCHEDULE OF REVENUES, EXPENDITURES, AND CHANGES
IN FUND BALANCE - BUDGET (GAAP BASIS) AND ACTUAL
Year Ended June 30, 2018
(With Comparative Actual Amounts for Year Ended June 30, 2017)

	2018 Budget	2018 Actual	Variance - Positive (Negative)	2017 Actual
Revenues:				
Miscellaneous:				
Investment Income	$ -	$ 71	$ 71	$ 1,091
Other	-	27,652	27,652	-
	-	27,723	27,723	1,091
Expenditures:				
General government:				
Salaries and wages	-	787	(787)	-
Benefits	-	300	(300)	-
Services and supplies	10,000	28,906	(18,906)	4,480
Capital outlay	94,423	12,850	81,573	39,617
Total expenditures	104,423	42,843	61,580	44,097
Excess (deficiency) of revenues over expenditures	(104,423)	(15,120)	89,303	(43,006)
Other financing sources (uses):				
Operating transfers in	130,000	130,000	-	215,000
Operating transfers out	(378,577)	(378,500)	77	(40,000)
Total other financing sources (uses)	(248,577)	(248,500)	77	175,000
Net change in fund balance	(353,000)	(263,620)	89,380	131,994
Fund balance:				
Beginning of year	353,000	472,187	119,187	340,193
End of year	$ -	$ 208,567	$ 208,567	$ 472,187

LINCOLN COUNTY, NEVADA
LINCOLN COUNTY LAND ACT EMERGENCY DISASTER
INTERNALLY REPORTED (BUDGETARY BASIS) FUND REPORTED
AS PART OF THE GENERAL FUND FOR EXTERNAL REPORTING PURPOSES
COMPARATIVE BALANCE SHEETS
June 30, 2018 and 2017

	2018	2017
ASSETS		
Pooled cash and investments	$ 64,608	$ 64,597
Interest receivable	115	151
Total assets	$ 64,723	$ 64,748
LIABILITIES		
Accounts payable	$ -	$ -
FUND BALANCE		
Committed	64,723	64,748
Total liabilities and fund balance	$ 64,723	$ 64,748

LINCOLN COUNTY, NEVADA
LINCOLN COUNTY LAND ACT EMERGENCY DISASTER
INTERNALLY REPORTED (BUDGETARY BASIS) FUND REPORTED
AS PART OF THE GENERAL FUND FOR EXTERNAL REPORTING PURPOSES
SCHEDULE OF REVENUES, EXPENDITURES, AND CHANGES
IN FUND BALANCE - BUDGET (GAAP BASIS) AND ACTUAL
Year Ended June 30, 2018
(With Comparative Actual Amounts for Year Ended June 30, 2017)

	2018		Variance - Positive (Negative)	2017
	Budget	Actual		Actual
Revenues:				
Miscellaneous:				
Investment income	$ -	$ 24	$ 24	$ 119
Expenditures:				
Current:				
General government:				
Services and supplies	64,629	49	64,580	-
Excess (deficiency) of revenues over expenditures	(64,629)	(25)	64,604	119
Fund balance:				
Beginning of year	64,629	64,748	119	64,629
End of year	$ -	$ 64,723	$ 64,723	$ 64,748

LINCOLN COUNTY, NEVADA
LINCOLN COUNTY WATER EMERGENCY DISASTER
INTERNALLY REPORTED (BUDGETARY BASIS) FUND REPORTED
AS PART OF THE GENERAL FUND FOR EXTERNAL REPORTING PURPOSES
COMPARATIVE BALANCE SHEETS
June 30, 2018 and 2017

	2018	2017
ASSETS		
Pooled cash and investments	$ 63,331	$ 63,270
Interest receivable	111	148
Total assets	$ 63,442	$ 63,418
FUND BALANCE		
Committed	$ 63,442	$ 63,418

LINCOLN COUNTY, NEVADA
LINCOLN COUNTY WATER EMERGENCY DISASTER
INTERNALLY REPORTED (BUDGETARY BASIS) FUND REPORTED
AS PART OF THE GENERAL FUND FOR EXTERNAL REPORTING PURPOSES
SCHEDULE OF REVENUES, EXPENDITURES, AND CHANGES
IN FUND BALANCE - BUDGET (GAAP BASIS) AND ACTUAL
Year Ended June 30, 2018
(With Comparative Actual Amounts for Year Ended June 30, 2017)

	2018 Budget	2018 Actual	Variance - Positive (Negative)	2017 Actual
Revenues:				
Miscellaneous:				
Investment income	$ 20	$ 24	$ 4	$ 116
Expenditures:				
Current:				
General government:				
Services and supplies	63,342	-	63,342	-
Excess (deficiency) of revenues over expenditures	(63,322)	24	63,346	116
Fund balance:				
Beginning of year	63,322	63,418	96	63,302
End of year	$ -	$ 63,442	$ 63,442	$ 63,418

LINCOLN COUNTY, NEVADA
NONMAJOR CAPITAL PROJECTS FUNDS
COMBINING BALANCE SHEET
June 30, 2018
(With Comparative Totals for June 30, 2017)

	Capital Improvements	Pioche Town Grant	Pioche Town	Alamo Town	Panaca Town
ASSETS					
Pooled cash and investments	$ 35,984	$ 13,983	$ 49,263	$ 15,825	$ 11,416
Interest receivable	170	24	195	70	56
Taxes receivable	1,668	-	-	-	-
Due from other governments	92	-	-	-	-
Total assets	$ 37,914	$ 14,007	$ 49,458	$ 15,895	$ 11,472
LIABILITIES					
Accounts payable	$ -	$ -	$ -	$ -	$ -
DEFERRED INFLOWS OF RESOURCES					
Unavailable revenue - property taxes	1,370	-	-	-	-
FUND BALANCE					
Restricted for:					
Capital projects	36,544	14,007	49,458	15,895	11,472
Total liabilities, deferred inflows of resources, and fund balance	$ 37,914	$ 14,007	$ 49,458	$ 15,895	$ 11,472

Ambulance	Fair Board	Vehicle	Road Equipment	Airport	Lincoln County Land Act
$ 11,878	$ 29,285	$ 13,380	$ 82,326	$ 2,953	$ 29,774
54	130	49	144	15	52
-	-	-	-	-	-
-	-	-	-	-	-
$ 11,932	$ 29,415	$ 13,429	$ 82,470	$ 2,968	$ 29,826
$ -	$ -	$ -	$ -	$ -	$ -
-	-	-	-	-	-
11,932	29,415	13,429	82,470	2,968	29,826
$ 11,932	$ 29,415	$ 13,429	$ 82,470	$ 2,968	$ 29,826

LINCOLN COUNTY, NEVADA
NONMAJOR CAPITAL PROJECTS FUNDS
COMBINING BALANCE SHEET
June 30, 2018
(With Comparative Totals for June 30, 2017)

	Lincoln County Water	Lincoln County Water District	Totals 2018	Totals 2017
ASSETS				
Pooled cash and investments	$ 78,671	$ 695,339	$ 1,070,077	$ 1,122,430
Interest receivable	139	2,403	3,501	3,299
Taxes receivable	-	-	1,668	1,401
Due from other governments	-	-	92	113
Total assets	$ 78,810	$ 697,742	$ 1,075,338	$ 1,127,243
LIABILITIES				
Accounts payable	$ -	$ -	$ -	$ -
DEFERRED INFLOWS OF RESOURCES				
Unavailable revenue - property taxes	-	-	1,370	1,198
FUND BALANCE				
Restricted for:				
Capital projects	78,810	697,742	1,073,968	1,126,045
Total liabilities, deferred inflows of resources, and fund balance	$ 78,810	$ 697,742	$ 1,075,338	$ 1,127,243

LINCOLN COUNTY, NEVADA
NONMAJOR CAPITAL PROJECTS FUNDS
COMBINING SCHEDULE OF REVENUES, EXPENDITURES,
AND CHANGES IN FUND BALANCE
Year Ended June 30, 2018
(With Comparative Actual Amounts for Year Ended June 30, 2017)

	Capital Improvements	Pioche Town Grant	Pioche Town	Alamo Town	Panaca Town
Revenues:					
Taxes	$ 108,877	$ -	$ -	$ -	$ -
Intergovernmental	311	-	-	-	-
Miscellaneous	35	5	40	14	238
Total revenues	109,223	5	40	14	238
Expenditures:					
Intergovernmental	7,637	-	-	-	-
Capital projects	-	-	-	-	4,227
Debt service:					
Principal	-	-	-	-	-
Interest	-	-	-	-	-
Total expenditures	7,637	-	-	-	4,227
Excess (deficiency) of revenues over expenditures	101,586	5	40	14	(3,989)
Other financing sources (uses):					
Operating transfers in	-	-	3,273	2,181	4,363
Operating transfers out	(107,817)	-	-	-	-
Sale of capital assets	-	-	-	-	-
Capital lease proceeds	-	-	-	-	-
Total other financing sources (uses)	(107,817)	-	3,273	2,181	4,363
Net change in fund balance	(6,231)	5	3,313	2,195	374
Fund balance:					
Beginning of year	42,775	14,002	46,145	13,700	11,098
End of year	$ 36,544	$ 14,007	$ 49,458	$ 15,895	$ 11,472

Ambulance	Fair Board	Vehicle	Road Equipment	Airport	Lincoln County Land Act
$ -	$ -	$ -	$ -	$ -	$ -
-	-	-	-	-	-
11	27	10	30	3	11
11	27	10	30	3	11
-	-	-	-	-	-
-	4,000	42,007	190,645	-	-
-	-	68,240	-	-	-
-	-	5,472	-	-	-
-	4,000	115,719	190,645	-	-
11	(3,973)	(115,709)	(190,615)	3	11
-	-	114,000	100,000	-	-
-	-	-	-	-	-
-	-	14,798	38,946	-	-
-	-	-	-	-	-
-	-	128,798	138,946	-	-
11	(3,973)	13,089	(51,669)	3	11
11,921	33,388	340	134,139	2,965	29,815
$ 11,932	$ 29,415	$ 13,429	$ 82,470	$ 2,968	$ 29,826

LINCOLN COUNTY, NEVADA
NONMAJOR CAPITAL PROJECTS FUNDS
COMBINING SCHEDULE OF REVENUES, EXPENDITURES,
AND CHANGES IN FUND BALANCE
Year Ended June 30, 2018
(With Comparative Actual Amounts for Year Ended June 30, 2017)

	Lincoln County Water	Lincoln County Water District	Totals 2018	Totals 2017
Revenues:				
Taxes	$ -	$ -	$ 108,877	$ 111,797
Intergovernmental	-	-	311	134
Miscellaneous	28	(1,883)	(1,431)	17,048
Total revenues	28	(1,883)	107,757	128,979
Expenditures:				
Intergovernmental	-	-	7,637	7,852
Capital projects	-	7,350	248,229	274,181
Debt service:				
Principal	-	-	68,240	69,882
Interest	-	-	5,472	3,830
Total expenditures	-	7,350	329,578	355,745
Excess (deficiency) of revenues over expenditures	28	(9,233)	(221,821)	(226,766)
Other financing sources (uses):				
Operating transfers in	-	-	223,817	208,178
Operating transfers out	-	-	(107,817)	(92,095)
Sale of capital assets	-	-	53,744	-
Capital lease proceeds	-	-	-	90,000
Total other financing sources (uses)	-	-	169,744	206,083
Net change in fund balance	28	(9,233)	(52,077)	(20,683)
Fund balance:				
Beginning of year	78,782	706,975	1,126,045	1,146,728
End of year	$ 78,810	$ 697,742	$ 1,073,968	$ 1,126,045

LINCOLN COUNTY, NEVADA
NONMAJOR CAPITAL IMPROVEMENTS CAPITAL PROJECTS FUND
COMPARATIVE BALANCE SHEETS
June 30, 2018 and 2017

	2018	2017
ASSETS		
Pooled cash and investments	$ 35,984	$ 42,361
Interest receivable	170	98
Taxes receivable	1,668	1,401
Due from other governments	92	113
Total assets	$ 37,914	$ 43,973
LIABILITIES		
Accounts payable	$ -	$ -
DEFERRED INFLOWS OF RESOURCES		
Unavailable revenue - property taxes	1,370	1,198
FUND BALANCE		
Restricted	36,544	42,775
Total liabilities, deferred inflows of resources, and fund balance	$ 37,914	$ 43,973

LINCOLN COUNTY, NEVADA
NONMAJOR CAPITAL IMPROVEMENTS CAPITAL PROJECTS FUND
SCHEDULE OF REVENUES, EXPENDITURES, AND CHANGES
IN FUND BALANCE - BUDGET (GAAP BASIS) AND ACTUAL
Year Ended June 30, 2018
(With Comparative Actual Amounts for Year Ended June 30, 2017)

	2018 Budget	2018 Actual	Variance - Positive (Negative)	2017 Actual
Revenues:				
Taxes:				
Property taxes	$ 111,919	$ 108,877	$ (3,042)	$ 111,797
Intergovernmental:				
Private car lines	-	202	202	-
Fish and wildlife	-	109	109	134
Total intergovernmental	-	311	311	134
Miscellaneous:				
Investment income	430	35	(395)	63
Total revenues	112,349	109,223	(3,126)	111,994
Expenditures:				
Current:				
Intergovernmental	7,835	7,637	198	7,852
Capital projects:				
Services and supplies	-	-	-	-
Capital outlay	13,250	-	13,250	2,024
Total capital projects	13,250	-	13,250	2,024
Total expenditures	21,085	7,637	13,448	9,876
Excess (deficiency) of revenues over expenditures	91,264	101,586	10,322	102,118
Other financing sources (uses) :				
Operating transfers out	(108,072)	(107,817)	255	(92,095)
Net change in fund balance	(16,808)	(6,231)	10,577	10,023
Fund balance:				
Beginning of year	17,550	42,775	25,225	32,752
End of year	$ 742	$ 36,544	$ 35,802	$ 42,775

LINCOLN COUNTY, NEVADA
NONMAJOR PIOCHE TOWN GRANT CAPITAL PROJECTS FUND
COMPARATIVE BALANCE SHEETS
June 30, 2018 and 2017

	2018	2017
ASSETS		
Pooled cash and investments	$ 13,983	$ 13,969
Interest receivable	24	33
Total assets	$ 14,007	$ 14,002
LIABILITIES		
Accounts payable	$ -	$ -
FUND BALANCE		
Restricted	14,007	14,002
Total liabilities and fund balance	$ 14,007	$ 14,002

LINCOLN COUNTY, NEVADA
NONMAJOR PIOCHE TOWN GRANT CAPITAL PROJECTS FUND
SCHEDULE OF REVENUES, EXPENDITURES, AND CHANGES
IN FUND BALANCE - BUDGET (GAAP BASIS) AND ACTUAL
Year Ended June 30, 2018
(With Comparative Actual Amounts for Year Ended June 30, 2017)

	2018		Variance - Positive	2017
	Budget	Actual	(Negative)	Actual
Revenues:				
Miscellaneous:				
Investment income	$ 71	$ 5	$ (66)	$ 26
Expenditures:				
Current:				
Capital projects:				
Capital outlay	13,920	-	13,920	-
Excess (deficiency) of revenues over expenditures	(13,849)	5	13,854	26
Fund balance:				
Beginning of year	14,047	14,002	(45)	13,976
End of year	$ 198	$ 14,007	$ 13,809	$ 14,002

LINCOLN COUNTY, NEVADA
NONMAJOR PIOCHE TOWN CAPITAL PROJECTS FUND
COMPARATIVE BALANCE SHEETS
June 30, 2018 and 2017

	2018	2017
ASSETS		
Pooled cash and investments	$ 49,263	$ 46,044
Interest receivable	195	101
Total assets	$ 49,458	$ 46,145
LIABILITIES		
Accounts payable	$ -	$ -
FUND BALANCE		
Restricted	49,458	46,145
Total liabilities and fund balance	$ 49,458	$ 46,145

LINCOLN COUNTY, NEVADA
NONMAJOR PIOCHE TOWN CAPITAL PROJECTS FUND
SCHEDULE OF REVENUES, EXPENDITURES, AND CHANGES IN FUND BALANCE - BUDGET (GAAP BASIS) AND ACTUAL
Year Ended June 30, 2018
(With Comparative Actual Amounts for Year Ended June 30, 2017)

	2018		Variance - Positive	2017
	Budget	Actual	(Negative)	Actual
Revenues:				
Miscellaneous:				
Investment income	$ 50	$ 40	$ (10)	$ 84
Expenditures:				
Current:				
Capital projects:				
Capital outlay	43,625	-	43,625	1,920
Excess (deficiency) of revenues over expenditures	(43,575)	40	43,615	(1,836)
Other financing sources (uses):				
Operating transfers in	5,433	3,273	(2,160)	6,448
Net change in fund balance	(38,142)	3,313	41,455	4,612
Fund balance:				
Beginning of year	38,142	46,145	8,003	41,533
End of year	$ -	$ 49,458	$ 49,458	$ 46,145

LINCOLN COUNTY, NEVADA
NONMAJOR ALAMO TOWN CAPITAL PROJECTS FUND
COMPARATIVE BALANCE SHEETS
June 30, 2018 and 2017

	2018	2017
ASSETS		
Pooled cash and investments	$ 15,825	$ 13,668
Interest receivable	70	32
Total assets	$ 15,895	$ 13,700
LIABILITIES		
Accounts payable	$ -	$ -
FUND BALANCE		
Restricted	15,895	13,700
Total liabilities and fund balance	$ 15,895	$ 13,700

LINCOLN COUNTY, NEVADA
NONMAJOR ALAMO TOWN CAPITAL PROJECTS FUND
SCHEDULE OF REVENUES, EXPENDITURES, AND CHANGES IN FUND BALANCE - BUDGET (GAAP BASIS) AND ACTUAL
Year Ended June 30, 2018
(With Comparative Actual Amounts for Year Ended June 30, 2017)

	2018 Budget	2018 Actual	Variance - Positive (Negative)	2017 Actual
Revenues:				
Miscellaneous:				
Investment income	$ 100	$ 14	$ (86)	$ 26
Expenditures:				
Current:				
Capital projects:				
Capital outlay	6,157	-	6,157	-
Excess (deficiency) of revenues over expenditures	(6,057)	14	6,071	26
Other financing sources (uses):				
Operating transfers in	2,237	2,181	(56)	2,243
Net change in fund balance	(3,820)	2,195	6,015	2,269
Fund balance:				
Beginning of year	3,820	13,700	9,880	11,431
End of year	$ -	$ 15,895	$ 15,895	$ 13,700

LINCOLN COUNTY, NEVADA
NONMAJOR PANACA TOWN CAPITAL PROJECTS FUND
COMPARATIVE BALANCE SHEETS
June 30, 2018 and 2017

	2018	2017
ASSETS		
Pooled cash and investments	$ 11,416	$ 11,072
Interest receivable	56	26
Total assets	$ 11,472	$ 11,098
LIABILITIES		
Accounts payable	$ -	$ -
FUND BALANCE		
Restricted	11,472	11,098
Total liabilities and fund balance	$ 11,472	$ 11,098

LINCOLN COUNTY, NEVADA
NONMAJOR PANACA TOWN CAPITAL PROJECTS FUND
SCHEDULE OF REVENUES, EXPENDITURES, AND CHANGES IN FUND BALANCE - BUDGET (GAAP BASIS) AND ACTUAL
Year Ended June 30, 2018
(With Comparative Actual Amounts for Year Ended June 30, 2017)

	2018		Variance - Positive	2017
	Budget	Actual	(Negative)	Actual
Revenues:				
Miscellaneous:				
Investment income	$ 10	$ 12	$ 2	$ 24
Other	-	226	226	-
Total revenues	10	238	228	24
Expenditures:				
Current:				
Capital projects:				
Capital outlay	9,000	4,227	4,773	1,499
Excess (deficiency) of revenues over expenditures	(8,990)	(3,989)	5,001	(1,475)
Other financing sources (uses):				
Operating transfers in	4,477	4,363	(114)	4,487
Net change in fund balance	(4,513)	374	4,887	3,012
Fund balance:				
Beginning of year	6,675	11,098	4,423	8,086
End of year	$ 2,162	$ 11,472	$ 9,310	$ 11,098

LINCOLN COUNTY, NEVADA
NONMAJOR AMBULANCE CAPITAL PROJECTS FUND
COMPARATIVE BALANCE SHEETS
June 30, 2018 and 2017

	2018	2017
ASSETS		
Pooled cash and investments	$ 11,878	$ 11,893
Interest receivable	54	28
Total assets	$ 11,932	$ 11,921
LIABILITIES		
Accounts payable	$ -	$ -
FUND BALANCE		
Restricted	11,932	11,921
Total liabilities and fund balance	$ 11,932	$ 11,921

LINCOLN COUNTY, NEVADA
NONMAJOR AMBULANCE CAPITAL PROJECTS FUND
SCHEDULE OF REVENUES, EXPENDITURES, AND CHANGES IN FUND BALANCE - BUDGET (GAAP BASIS) AND ACTUAL
Year Ended June 30, 2018
(With Comparative Actual Amounts for Year Ended June 30, 2017)

	2018		Variance-Positive	2017
	Budget	Actual	(Negative)	Actual
Miscellaneous:				
Investment income	$ 200	$ 11	$ (189)	$ (66)
Other	-	-	-	23,330
Total revenues	200	11	(189)	23,264
Expenditures:				
Current:				
Capital projects:				
Capital outlay	10,000	-	10,000	23,300
Excess (deficiency) of revenues over expenditures	(9,800)	11	9,811	(36)
Other financing sources (uses):				
Operating transfers in	-	-	-	-
Net change in fund balance	(9,800)	11	9,811	(36)
Fund balance:				
Beginning of year	35,487	11,921	(23,566)	11,957
End of year	$ 25,687	$ 11,932	$ (13,755)	$ 11,921

LINCOLN COUNTY, NEVADA
NONMAJOR FAIR BOARD CAPITAL PROJECTS FUND
COMPARATIVE BALANCE SHEETS
June 30, 2018 and 2017

	2018	2017
ASSETS		
Pooled cash and investments	$ 29,285	$ 33,310
Interest receivable	130	78
Total assets	$ 29,415	$ 33,388
LIABILITIES		
Accounts payable	$ -	$ -
FUND BALANCE		
Restricted	29,415	33,388
Total liabilities and fund balance	$ 29,415	$ 33,388

LINCOLN COUNTY, NEVADA
NONMAJOR FAIR BOARD CAPITAL PROJECTS FUND
SCHEDULE OF REVENUES, EXPENDITURES, AND CHANGES IN FUND BALANCE - BUDGET (GAAP BASIS) AND ACTUAL
Year Ended June 30, 2018
(With Comparative Actual Amounts for Year Ended June 30, 2017)

	2018 Budget	2018 Actual	Variance - Positive (Negative)	2017 Actual
Revenues:				
Miscellaneous:				
Investment income	$ 200	$ 27	$ (173)	$ 48
Expenditures:				
Current:				
Capital projects:				
Capital outlay	27,802	4,000	23,802	-
Excess (deficiency) of revenues over expenditures	(27,602)	(3,973)	23,629	48
Fund balance:				
Beginning of year	27,602	33,388	5,786	33,340
End of year	$ -	$ 29,415	$ 29,415	$ 33,388

LINCOLN COUNTY, NEVADA
NONMAJOR VEHICLE CAPITAL PROJECTS FUND
COMPARATIVE BALANCE SHEETS
June 30, 2018 and 2017

	2018	2017
ASSETS		
Pooled cash and investments	$ 13,380	$ 339
Interest receivable	49	1
Total assets	$ 13,429	$ 340
LIABILITIES		
Accounts payable	$ -	$ -
FUND BALANCE		
Restricted	13,429	340
Total liabilities and fund balance	$ 13,429	$ 340

LINCOLN COUNTY, NEVADA
NONMAJOR VEHICLE CAPITAL PROJECTS FUND
SCHEDULE OF REVENUES, EXPENDITURES, AND CHANGES IN FUND BALANCE - BUDGET (GAAP BASIS) AND ACTUAL
Year Ended June 30, 2018
(With Comparative Actual Amounts for Year Ended June 30, 2017)

	2018		Variance - Positive	2017
	Budget	Actual	(Negative)	Actual
Revenues:				
Miscellaneous:				
Investment income	$ -	$ 10	$ 10	$ 9
Expenditures:				
Current:				
Capital projects:				
Capital outlay	61,000	42,007	18,993	127,038
Debt service:				
Principal	68,240	68,240	-	69,882
Interest	5,436	5,472	(36)	3,830
Total debt service	73,676	73,712	(36)	73,712
Total expenditures	134,676	115,719	18,957	200,750
Excess (deficiency) of revenues over expenditures	(134,676)	(115,709)	18,967	(200,741)
Other financing sources (uses):				
Operating transfers in	114,000	114,000	-	95,000
Sale of capital assets	15,000	14,798	(202)	-
Capital lease proceeds	-	-	-	90,000
Total other financing sources (uses)	129,000	128,798	(202)	185,000
Net change in fund balance	(5,676)	13,089	18,765	(15,741)
Fund balance:				
Beginning of year	5,676	340	(5,336)	16,081
End of year	$ -	$ 13,429	$ 13,429	$ 340

LINCOLN COUNTY, NEVADA
NONMAJOR ROAD EQUIPMENT CAPITAL PROJECTS FUND
COMPARATIVE BALANCE SHEETS
June 30, 2018 and 2017

	2018	2017
ASSETS		
Pooled cash and investments	$ 82,326	$ 133,825
Interest receivable	144	314
Total assets	$ 82,470	$ 134,139
FUND BALANCE		
Restricted	$ 82,470	$ 134,139

LINCOLN COUNTY, NEVADA
NONMAJOR ROAD EQUIPMENT CAPITAL PROJECTS FUND
SCHEDULE OF REVENUES, EXPENDITURES, AND CHANGES IN FUND BALANCE - BUDGET (GAAP BASIS) AND ACTUAL
Year Ended June 30, 2018
(With Comparative Actual Amounts for Year Ended June 30, 2017)

	2018		Variance - Positive	2017
	Budget	Actual	(Negative)	Actual
Revenues:				
Miscellaneous:				
Investment income	$ -	$ 30	$ 30	$ 463
Expenditures:				
Current:				
Capital projects:				
Capital outlay	220,000	190,645	29,355	100,000
Excess (deficiency) of revenues over expenditures	(220,000)	(190,615)	29,385	(99,537)
Other financing sources (uses):				
Operating transfers in	100,000	100,000	-	100,000
Sale of capital assets	-	38,946	38,946	-
Total other financing sources	100,000	138,946	38,946	100,000
Net change in fund balance	(120,000)	(51,669)	68,331	463
Fund balance:				
Beginning of year	133,676	134,139	463	133,676
End of year	$ 13,676	$ 82,470	$ 68,794	$ 134,139

LINCOLN COUNTY, NEVADA
NONMAJOR AIRPORT CAPITAL PROJECTS FUND
COMPARATIVE BALANCE SHEETS
June 30, 2018 and 2017

	2018	2017
ASSETS		
Pooled cash and investments	$ 2,953	$ 2,958
Interest receivable	15	7
Total assets	$ 2,968	$ 2,965
LIABILITIES		
Accounts payable	$ -	$ -
FUND BALANCE		
Restricted	2,968	2,965
Total liabilities and fund balance	$ 2,968	$ 2,965

LINCOLN COUNTY, NEVADA
NONMAJOR AIRPORT CAPITAL PROJECTS FUND
SCHEDULE OF REVENUES, EXPENDITURES, AND CHANGES IN FUND BALANCE - BUDGET (GAAP BASIS) AND ACTUAL
Year Ended June 30, 2018
(With Comparative Actual Amounts for the Year Ended June 30, 2017)

	2018		Variance - Positive	2017
	Budget	Actual	(Negative)	Actual
Revenues				
Miscellaneous:				
Investment income	$ -	$ 3	$ 3	$ 5
Expenditures:				
Curent:				
Capital projects:				
Capital outlay	2,000	-	2,000	-
Excess (deficiency) of revenues over expenditures	(2,000)	3	2,003	5
Fund balance:				
Beginning of year	2,000	2,965	965	2,960
End of year	$ -	$ 2,968	$ 2,968	$ 2,965

LINCOLN COUNTY, NEVADA
NONMAJOR LINCOLN COUNTY LAND ACT CAPITAL PROJECTS FUND
COMPARATIVE BALANCE SHEETS
June 30, 2018 and 2017

	2018	2017
ASSETS		
Pooled cash and investments	$ 29,774	$ 29,745
Interest receivable	52	70
Total assets	$ 29,826	$ 29,815
LIABILITIES		
Accounts payable	$ -	$ -
FUND BALANCE		
Restricted	29,826	29,815
Total liabilities and fund balance	$ 29,826	$ 29,815

LINCOLN COUNTY, NEVADA
NONMAJOR LINCOLN COUNTY LAND ACT CAPITAL PROJECTS FUND
SCHEDULE OF REVENUES, EXPENDITURES, AND CHANGES
IN FUND BALANCE - BUDGET (GAAP BASIS) AND ACTUAL
Year Ended June 30, 2018
(With Comparative Actual Amounts for the Year Ended June 30, 2017)

	2018			2017
	Budget	Actual	Variance - Positive (Negative)	Actual
Revenues:				
Miscellaneous:				
Investment income	$ -	$ 11	$ 11	$ 55
Expenditures:				
Current:				
Capital projects:				
Capital outlay	29,760	-	29,760	-
Excess (deficiency) of revenues over expenditures	(29,760)	11	29,771	55
Fund balance:				
Beginning of year	29,760	29,815	55	29,760
End of year	$ -	$ 29,826	$ 29,826	$ 29,815

LINCOLN COUNTY, NEVADA
NONMAJOR LINCOLN COUNTY WATER CAPITAL PROJECTS FUND
COMPARATIVE BALANCE SHEETS
June 30, 2018 and 2017

	2018	2017
ASSETS		
Pooled cash and investments	$ 78,671	$ 78,597
Interest receivable	139	185
Total assets	$ 78,810	$ 78,782
LIABILITIES		
Accounts payable	$ -	$ -
FUND BALANCE		
Restricted	78,810	78,782
Total liabilities and fund balance	$ 78,810	$ 78,782

LINCOLN COUNTY, NEVADA
NONMAJOR LINCOLN COUNTY WATER CAPITAL PROJECTS FUND
SCHEDULE OF REVENUES, EXPENDITURES, AND CHANGES
IN FUND BALANCE - BUDGET (GAAP BASIS) AND ACTUAL
Year Ended June 30, 2018
(With Comparative Actual Amounts for the Year Ended June 30, 2017)

	2018			
	Budget	Actual	Variance - Positive (Negative)	2017 Actual
Revenues:				
Miscellaneous:				
Investment income	$ -	$ 28	$ 28	$ 145
Expenditures:				
Current:				
Capital projects:				
Capital outlay	78,637	-	78,637	-
Excess (deficiency) of revenues over expenditures	(78,637)	28	78,665	145
Fund balance:				
Beginning of year	78,637	78,782	145	78,637
End of year	$ -	$ 78,810	$ 78,810	$ 78,782

LINCOLN COUNTY, NEVADA
NONMAJOR LINCOLN COUNTY WATER DISTRICT CAPITAL PROJECTS FUND
COMPARATIVE BALANCE SHEETS
June 30, 2018 and 2017

	2018	2017
ASSETS		
Pooled cash and investments	$ 695,339	$ 704,649
Interest receivable	2,403	2,326
Total assets	$ 697,742	$ 706,975
LIABILITIES		
Accounts payable	$ -	$ -
FUND BALANCE		
Restricted	697,742	706,975
Total liabilities and fund balance	$ 697,742	$ 706,975

LINCOLN COUNTY, NEVADA
NONMAJOR LINCOLN COUNTY WATER DISTRICT CAPITAL PROJECTS FUND
SCHEDULE OF REVENUES, EXPENDITURES, AND CHANGES
IN FUND BALANCE - BUDGET (GAAP BASIS) AND ACTUAL
Year Ended June 30, 2018
(With Comparative Actual Amounts for the Year Ended June 30, 2017)

	2018		Variance - Positive	2017
	Budget	Actual	(Negative)	Actual
Revenues:				
Miscellaneous:				
Investment income	$ 7,500	$ (1,883)	$ (9,383)	$ (7,164)
Expenditures:				
Current:				
Capital projects:				
Capital outlay	747,539	7,350	740,189	18,400
Excess (deficiency) of revenues over expenditures	(740,039)	(9,233)	730,806	(25,564)
Fund balance:				
Beginning of year	740,039	706,975	(33,064)	732,539
End of year	$ -	$ 697,742	$ 697,742	$ 706,975

LINCOLN COUNTY, NEVADA
NONMAJOR ENTERPRISE FUNDS
COMBINING STATEMENT OF NET POSITION
June 30, 2018
With Comparative Total for June 30, 2017

	Pioche Public Water Utility	Pioche Public Sewer Utility	Building Department
ASSETS			
Current assets:			
Pooled cash and investments	$ 122,677	$ 179,327	$ 33,092
Accounts receivable	24,215	10,768	-
Interest receivable	128	139	29
Total current assets	147,020	190,234	33,121
Restricted assets:			
Cash	20,748	11,490	-
Capital assets:			
Land	2,000	10,000	-
Property, plant and equipment (net of depreciation)	476,679	570,888	951
Total capital assets	478,679	580,888	951
Total assets	646,447	782,612	34,072
DEFERRED OUTFLOWS OF RESOURCES			
Deferred pension charge	12,927	7,210	17,928
Deferred opeb	1,762	1,762	-
Total deferred outflows of resources	14,689	8,972	17,928
LIABILITIES			
Current liabilities:			
Accounts payable	20,770	1,364	599
Accrued payroll and benefits	5,099	2,782	6,071
Customer deposits	1,760	-	-
Accrued compensated absences	4,640	2,203	6,183
Accrued interest payable	-	1,336	-
Total current liabilities	32,269	7,685	12,853
Current liabilities payable from restricted assets:			
Revenue bond	19,537	3,154	-
Non-current liabilities:			
Accrued compensated absences	3,297	1,864	3,790
Net pension liability	88,999	45,565	100,186
OPEB liability	30,930	30,929	-
Revenue bond	7,638	180,783	-
Total non-current liabilities	130,864	259,141	103,976
Total liabilities	182,670	269,980	116,829
DEFERRED INFLOWS OF RESOURCES			
Deferred pension charge	9,634	5,077	12,464
NET POSITION			
Invested in capital assets, net of related debt	451,504	396,951	951
Restricted for revenue bond debt service	20,748	11,490	-
Unrestricted	(3,420)	108,086	(78,244)
Total net position	$ 468,832	$ 516,527	$ (77,293)

Totals	
2018	2017
$ 335,096	$ 313,928
34,983	33,571
296	447
370,375	347,946
32,238	32,238
12,000	12,000
1,048,518	1,100,071
1,060,518	1,112,071
1,463,131	1,492,255
38,065	56,456
3,524	-
41,589	56,456
22,733	14,617
13,952	10,734
1,760	1,250
13,026	12,653
1,336	1,658
52,807	40,912
22,691	21,607
8,951	8,571
234,750	247,820
61,859	-
188,421	211,399
493,981	467,790
569,479	530,309
27,175	19,119
849,406	879,065
32,238	32,238
26,422	87,980
$ 908,066	$ 999,283

LINCOLN COUNTY, NEVADA
NONMAJOR ENTERPRISE FUNDS
COMBINING SCHEDULE OF REVENUES, EXPENSES, AND CHANGES IN NET POSITION
Year Ended June 30, 2018
With Comparative Total for June 30, 2017

	Pioche Public Water Utility	Pioche Public Sewer Utility	Building Department
Operating revenues:			
Charges for services	$ 136,855	$ 113,303	$ 17,849
Operating expenses:			
Salaries and wages	48,616	29,548	41,213
Employee benefits	25,911	15,948	28,941
Services and supplies	104,060	30,524	6,833
Depreciation	27,008	23,664	881
Total operating expenses	205,595	99,684	77,868
Operating income (loss)	(68,740)	13,619	(60,019)
Non-operating revenues (expenses):			
Investment income	27	29	7
Miscellaneous fees	-	-	-
Operating transfers in	-	-	40,000
Capital fees	34,372	22,263	-
Custom fees	4,916	1,223	-
Interest expense	(1,875)	(7,825)	-
Total non-operating revenues (expenses)	37,440	15,690	40,007
Change in net position	(31,300)	29,309	(20,012)
Net Position:			
Beginning of year	532,833	518,017	(51,567)
Restatement per GASB 68	(32,701)	(30,799)	(5,714)
Beginning balance as restated	500,132	487,218	(57,281)
End of year	$ 468,832	$ 516,527	$ (77,293)

Totals	
2018	2017
$ 268,007	$ 287,664
119,377	121,524
70,800	71,299
141,417	118,030
51,553	52,120
383,147	362,973
(115,140)	(75,309)
63	280
-	550
40,000	40,000
56,635	65,019
6,139	9,630
(9,700)	(11,002)
93,137	104,477
(22,003)	29,168
999,283	970,115
(69,214)	-
930,069	970,115
$ 908,066	$ 999,283

LINCOLN COUNTY, NEVADA
NONMAJOR ENTERPRISE FUNDS
COMBINING STATEMENT OF CASH FLOWS
Year Ended June 30, 2018
With Comparative Total for June 30, 2017

	Pioche Public Water Utility	Pioche Public Sewer Utility
Cash flows from operating activities:		
Cash received from customers	$ 137,324	$ 111,932
Cash paid for services and supplies	(93,157)	(32,599)
Cash paid for salaries and benefits	(71,375)	(44,052)
Net cash provided (used) by operating activities	(27,208)	35,281
Cash flows from noncapital financing activities:		
Operating transfers in/out	-	-
Cash flows from capital and related financing activities:		
Purchases of capital assets	-	-
Miscellaneous fees	-	-
Capital fees	34,372	22,263
Custom fees	4,916	1,223
Debt retirement	(18,873)	(3,021)
Interest paid	(1,875)	(8,147)
Net cash provided (used) by capital and related financing activities	18,540	12,318
Cash flows from investing activities:		
Investment income	40	104
Net change in cash and cash equivalents	(8,628)	47,703
Cash:		
Beginning of year	152,053	143,114
End of year	$ 143,425	$ 190,817
Reconciliation of operating income (loss) to net cash provided (used) by operating activities:		
Operating income (loss)	$ (68,740)	$ 13,619
Adjustments to reconcile operating income (loss) to net cash provided (used) by operating activities:		
Depreciation expense	27,008	23,664
(Increase) decrease in accounts receivable	(41)	(1,371)
Increase (decrease) in accounts payable	10,903	(2,075)
Increase (decrease) in accrued payroll and benefits	1,898	909
Increase (decrease) in compensated absences	(364)	(186)
Increase (decrease) in net pension liability	(5,341)	(2,654)
Increase (decrease) in net pension expense	6,394	2,811
Increase (decrease) in OPEB liability	30,930	30,929
Increase (decrease) in OPEB expense	(30,365)	(30,365)
Increase (decrease) in customer deposits	510	-
Total adjustments	41,532	21,662
Net cash provided (used) by operating activities	$ (27,208)	$ 35,281

Building Department	Totals 2018	2017
$ 17,849	$ 267,105	$ 283,479
(7,545)	(133,301)	(123,878)
(68,281)	(183,708)	(191,885)
(57,977)	(49,904)	(32,284)
40,000	40,000	40,000
-	-	(21,734)
-	-	550
-	56,635	65,019
-	6,139	9,630
-	(21,894)	(20,848)
-	(10,022)	(11,067)
-	30,858	21,550
70	214	20
(17,907)	21,168	29,286
50,999	346,166	316,880
$ 33,092	$ 367,334	$ 346,166
$ (60,019)	$ (115,140)	$ (75,309)
881	51,553	52,120
-	(1,412)	(4,805)
(712)	8,116	(5,848)
411	3,218	(1,791)
1,303	753	(1,182)
(5,075)	(13,070)	34,100
5,234	14,439	(30,189)
-	61,859	-
-	(60,730)	-
-	510	620
2,042	65,236	43,025
$ (57,977)	$ (49,904)	$ (32,284)

LINCOLN COUNTY, NEVADA
NONMAJOR PIOCHE PUBLIC UTILITY WATER ENTERPRISE FUND
COMPARATIVE STATEMENT OF NET POSITION
June 30, 2018 and 2017

	2018	2017
ASSETS		
Current assets:		
Pooled cash and investments	$ 122,677	$ 131,305
Accounts receivable	24,215	24,174
Interest receivable	128	141
Total current assets	147,020	155,620
Restricted assets:		
Cash	20,748	20,748
Capital assets:		
Land	2,000	2,000
Property, plant and equipment (net of depreciation)	476,679	503,687
Total capital assets	478,679	505,687
Total assets	646,447	682,055
DEFERRED OUTFLOWS OF RESOURCES		
Deferred pension charge	12,927	21,809
Deferred opeb	1,762	-
Total deferred outflows of resources	14,689	21,809
LIABILITIES		
Current liabilities:		
Accounts payable	20,770	9,867
Accrued payroll and benefits	5,099	3,201
Customer deposits	1,760	1,250
Accrued compensated absences	4,640	5,060
Total current liabilities	32,269	19,378
Current liabilities payable from restricted assets:		
Revenue bond	19,537	18,586
Non-current liabilities:		
Accrued compensated absences	3,297	3,241
Net pension liability	88,999	94,340
OPEB liability	30,930	-
Revenue bond	7,638	27,462
Total non-current liabilities	130,864	125,043
Total liabilities	182,670	163,007
DEFERRED INFLOWS OF RESOURCES		
Deferred pension charge	9,634	8,024
NET POSITION		
Invested in capital assets, net of related debt	451,504	459,639
Restricted for revenue bond debt service	20,748	20,748
Unrestricted	(3,420)	52,446
Total net position	$ 468,832	$ 532,833

LINCOLN COUNTY, NEVADA
NONMAJOR PIOCHE PUBLIC UTILITY WATER ENTERPRISE FUND
SCHEDULE OF REVENUES, EXPENSES, AND CHANGES IN NET POSITION - BUDGET (GAAP BASIS) AND ACTUAL
Year Ended June 30, 2018
(With Comparative Actual Amounts for Year Ended June 30, 2017)

	2018 Budget	2018 Actual	Variance-Positive (Negative)	2017 Actual
Operating revenues:				
Water	$ 190,000	$ 136,855	$ (53,145)	$ 187,589
Operating expenses:				
Water:				
Salaries and wages	77,104	48,616	28,488	56,082
Employee benefits	30,226	25,911	4,315	28,595
Services and supplies	87,256	104,060	(16,804)	84,043
Depreciation	32,000	27,008	4,992	27,147
Total operating expenses	226,586	205,595	20,991	195,867
Operating income (loss)	(36,586)	(68,740)	(32,154)	(8,278)
Non-operating revenues (expenses):				
Investment income	50	27	(23)	26
Water capital fees	34,000	34,372	372	43,383
Water custom fees	5,000	4,916	(84)	7,473
Interest expense	(2,162)	(1,875)	287	(2,793)
Total non-operating revenues (expenses)	36,888	37,440	552	48,089
Change in net position	$ 302	(31,300)	$ (31,602)	39,811
Net Position:				
Beginning of year		532,833		493,022
Restatement per GASB 75		(32,701)		-
Beginning balance as restated		500,132		493,022
End of year		$ 468,832		$ 532,833

LINCOLN COUNTY, NEVADA
NONMAJOR PIOCHE PUBLIC UTILITY WATER ENTERPRISE FUND
COMPARATIVE STATEMENT OF CASH FLOWS
June 30, 2018 and 2017

	2018	2017
Cash flows from operating activities:		
Cash received from customers	$ 137,324	$ 183,041
Cash paid for services and supplies	(93,157)	(88,969)
Cash paid for salaries and benefits	(71,375)	(83,951)
Net cash provided (used) by operating activities	(27,208)	10,121
Cash flows from capital and related financing activities:		
Purchases of capital assets	-	(19,143)
Capital fees	34,372	43,383
Custom fees	4,916	7,473
Debt retirement	(18,873)	(17,955)
Interest paid	(1,875)	(2,793)
Net cash provided (used) by capital and related financing activities	18,540	10,965
Cash flows from investing activities:		
Investment income	40	(37)
Net change in cash and cash equivalents	(8,628)	21,049
Cash:		
Beginning of year	152,053	131,004
End of year	$ 143,425	$ 152,053
Reconciliation of operating income (loss) to net cash provided (used) by operating activities:		
Operating income (loss)	$ (68,740)	$ (8,278)
Adjustments to reconcile operating income (loss) to net cash provided (used) by operating activities:		
Depreciation expense	27,008	27,147
(Increase) decrease in accounts receivable	(41)	(5,168)
Increase (decrease) in accounts payable	10,903	(4,926)
Increase (decrease) in accrued payroll and benefits	1,898	(1,784)
Increase (decrease) in compensated absences	(364)	(94)
Increase (decrease) in net pension liability	(5,341)	14,311
Increase (decrease) in net pension expense	6,394	(11,707)
Increase (decrease) in OPEB liability	30,930	-
Increase (decrease) in OPEB expense	(30,365)	-
Increase (decrease) in customer deposits	510	620
Total adjustments	41,532	18,399
Net cash provided (used) by operating activities	$ (27,208)	$ 10,121

LINCOLN COUNTY, NEVADA
NONMAJOR PIOCHE PUBLIC UTILITY SEWER ENTERPRISE FUND
COMPARATIVE STATEMENT OF NET POSITION
June 30, 2018 and 2017

	2018	2017
ASSETS		
Current assets:		
Pooled cash and investments	$ 179,327	$ 131,624
Accounts receivable	10,768	9,397
Interest receivable	139	214
Total current assets	190,234	141,235
Restricted assets:		
Cash	11,490	11,490
Capital assets:		
Land	10,000	10,000
Property, plant and equipment (net of depreciation)	570,888	594,552
Total capital assets	580,888	604,552
Total assets	782,612	757,277
DEFERRED OUTFLOWS OF RESOURCES		
Deferred pension charge	7,210	11,085
Deferred opeb	1,762	-
Total deferred outflows of resources	8,972	11,085
LIABILITIES		
Current liabilities:		
Accounts payable	1,364	3,439
Accrued payroll and benefits	2,782	1,873
Accrued compensated absences	2,203	2,101
Accrued interest payable	1,336	1,658
Total current liabilities	7,685	9,071
Current liabilities payable from restricted assets:		
Revenue bond	3,154	3,021
Non-current liabilities:		
Accrued compensated absences	1,864	2,152
Net pension liability	45,565	48,219
OPEB liability	30,929	-
Revenue bond	180,783	183,937
Total non-current liabilities	259,141	234,308
Total liabilities	269,980	246,400
DEFERRED INFLOWS OF RESOURCES		
Deferred pension charge	5,077	3,945
NET POSITION		
Invested in capital assets, net of related debt	396,951	417,594
Restricted for revenue bond debt service	11,490	11,490
Unrestricted	108,086	88,933
Total net position	$ 516,527	$ 518,017

LINCOLN COUNTY, NEVADA
NONMAJOR PIOCHE PUBLIC UTILITY SEWER ENTERPRISE FUND
SCHEDULE OF REVENUES, EXPENSES, AND CHANGES IN NET POSITION - BUDGET (GAAP BASIS) AND ACTUAL
Year Ended June 30, 2018
(With Comparative Actual Amounts for Year Ended June 30, 2017)

	2018 Budget	2018 Actual	Variance-Positive (Negative)	2017 Actual
Operating revenues:				
Sewer	$ 89,000	$ 113,303	$ 24,303	$ 82,442
Operating expenses:				
Sewer				
Salaries and wages	38,355	29,548	8,807	29,158
Employee benefits	14,615	15,948	(1,333)	14,442
Services and supplies	37,693	30,524	7,169	29,503
Depreciation	27,000	23,664	3,336	24,092
Total operating expenses	117,663	99,684	17,979	97,195
Operating income (loss)	(28,663)	13,619	42,282	(14,753)
Non-operating revenues (expenses):				
Investment income	50	29	(21)	220
Sewer capital fees	20,000	22,263	2,263	21,636
Sewer custom fees	-	1,223	1,223	2,157
Interest expense	(8,147)	(7,825)	322	(8,209)
Total non-operating revenues (expenses)	11,903	15,690	3,787	15,804
Change in net position	$ (16,760)	29,309	$ 46,069	1,051
Net Position:				
Beginning of year		518,017		516,966
Restatement per GASB 75		(30,799)		-
Beginning balance as restated		487,218		516,966
End of year		$ 516,527		$ 518,017

LINCOLN COUNTY, NEVADA
NONMAJOR PIOCHE PUBLIC UTILITY SEWER ENTERPRISE FUND
COMPARATIVE STATEMENT OF CASH FLOWS
June 30, 2018 and 2017

	2018	2017
Cash flows from operating activities:		
Cash received from customers	$ 111,932	$ 82,805
Cash paid for services and supplies	(32,599)	(31,363)
Cash paid for salaries and benefits	(44,052)	(44,089)
Net cash provided (used) by operating activities	35,281	7,353
Cash flows from capital and related financing activities:		
Purchases of capital assets	-	(2,591)
Capital fees	22,263	21,636
Custom fees	1,223	2,157
Debt retirement	(3,021)	(2,893)
Interest paid	(8,147)	(8,274)
Net cash provided (used) by capital and related financing activities	12,318	10,035
Cash flows from investing activities:		
Investment income	104	72
Net change in cash and cash equivalents	47,703	17,460
Cash:		
Beginning of year	143,114	125,654
End of year	$ 190,817	$ 143,114
Reconciliation of operating income (loss) to net cash provided (used) by operating activities:		
Operating income (loss)	$ 13,619	$ (14,753)
Adjustments to reconcile operating income (loss) to net cash provided (used) by operating activities:		
Depreciation expense	23,664	24,092
(Increase) decrease in accounts receivable	(1,371)	363
Increase (decrease) in accounts payable	(2,075)	(1,860)
Increase (decrease) in accrued payroll and benefits	909	(802)
Increase (decrease) in compensated absences	(186)	(49)
Increase (decrease) in net pension liability	(2,654)	7,037
Increase (decrease) in net pension expense	2,811	(6,675)
Increase (decrease) in OPEB liability	30,929	-
Increase (decrease) in OPEB expense	(30,365)	-
Total adjustments	21,662	22,106
Net cash provided (used) by operating activities	$ 35,281	$ 7,353

LINCOLN COUNTY, NEVADA
NONMAJOR BUILDING DEPARTMENT ENTERPRISE FUND
COMPARATIVE STATEMENT OF NET POSITION
June 30, 2018 and 2017

	2018	2017
ASSETS		
Current assets:		
Pooled cash and investments	$ 33,092	$ 50,999
Interest receivable	29	92
Capital assets:		
Property and equipment (net of depreciation)	951	1,832
Total assets	34,072	52,923
DEFERRED OUTFLOWS OF RESOURCES		
Deferred pension charge	17,928	23,562
LIABILITIES		
Current liabilities:		
Accounts payable	599	1,311
Accrued payroll and benefits	6,071	5,660
Accrued compensated absences	6,183	5,492
Total current liabilities	12,853	12,463
Non-current liabilities:		
Accrued compensated absences	3,790	3,178
Net pension liability	100,186	105,261
Total non-current liabilities	103,976	108,439
Total liabilities	116,829	120,902
DEFERRED INFLOWS OF RESOURCES		
Deferred pension charge	12,464	7,150
NET POSITION		
Invested in capital assets, net of related debt	951	1,832
Unrestricted	(78,244)	(53,399)
Total net position	$ (77,293)	$ (51,567)

LINCOLN COUNTY, NEVADA
NONMAJOR BUILDING DEPARTMENT ENTERPRISE FUND
SCHEDULE OF REVENUES, EXPENSES, AND CHANGES IN NET POSITION - BUDGET (GAAP BASIS) AND ACTUAL
Year Ended June 30, 2018
(With Comparative Actual Amounts for Year Ended June 30, 2017)

	2018 Budget	2018 Actual	Variance-Positive (Negative)	2017 Actual
Operating revenues:				
Charges for services	$ 25,000	$ 17,849	$ (7,151)	$ 18,183
Operating expenses:				
Public works:				
Salaries and wages	52,163	41,213	10,950	36,284
Employee benefits	15,685	28,941	(13,256)	28,262
Service and supplies	11,650	6,833	4,817	4,484
Depreciation	1,000	881	119	881
Total operating expenses	80,498	77,868	2,630	69,911
Operating income (loss)	(55,498)	(60,019)	(4,521)	(51,728)
Non-operating revenues (expenses):				
Investment income	-	7	7	34
Operating transfers in	40,000	40,000	-	40,000
Total non-operating revenues (expenses)	40,000	40,007	7	40,034
Change in net position	$ (15,498)	(20,012)	(4,514)	(11,694)
Net Position:				
Beginning of year		(51,567)		(39,873)
Restatement per GASB 75		(5,714)		-
Beginning balance as restated		(57,281)		(39,873)
End of year		$ (77,293)		$ (51,567)

LINCOLN COUNTY, NEVADA
NONMAJOR BUILDING DEPARTMENT ENTERPRISE FUND
COMPARATIVE STATEMENT OF CASH FLOWS
Years Ended June 30, 2018 and 2017

	2018	2017
Cash flows from operating activities:		
Cash received from customers	$ 17,849	$ 18,183
Cash paid for services and supplies	(7,545)	(3,546)
Cash paid for salaries and benefits	(68,281)	(63,845)
Net cash provided (used) by operating activities	(57,977)	(49,208)
Cash flows from noncapital financing activities:		
Operating transfers in	40,000	40,000
Cash flows from investing activities:		
Investment income	70	(15)
Net change in cash and cash equivalents	(17,907)	(9,223)
Cash:		
Beginning of year	50,999	60,222
End of year	$ 33,092	$ 50,999
Reconciliation of operating income to net cash provided (used) by operating activities:		
Operating income (loss)	$ (60,019)	$ (52,278)
Adjustments to reconcile operating income to net cash provided (used) by operating activities:		
Depreciation expense	881	881
Increase (decrease) in accounts payable	(712)	938
Increase (decrease) in accrued payroll and benefits	411	795
Increase (decrease) in compensated absences	1,303	(1,039)
Increase (decrease) in net pension liability	(5,075)	12,752
Increase (decrease) in net pension expense	5,234	(11,807)
Total adjustments	2,042	2,520
Net cash provided (used) by operating activities	$ (57,977)	$ (49,758)

LINCOLN COUNTY, NEVADA
AGENCY FUNDS
COMBINING STATEMENT OF NET POSITION
June 30, 2018
(With Comparative Totals for June 30, 2017)

	Tax Trust	State	Caliente City	Caliente City Capital Projects	Fish and Game
ASSETS					
Pooled cash and investments	$ 21,294	$ 74,790	$ 92	$ 28,162	$ 2,054
Interest receivable	37	-	2	-	-
Taxes receivable	-	6,511	2,597	-	-
Due from other governments	-	-	-	-	-
Total assets	$ 21,331	$ 81,301	$ 2,691	$ 28,162	$ 2,054
LIABILITIES					
Amount held for others	$ 21,331	$ 75,959	$ 1,000	$ 28,162	$ 2,054
Unavailable revenue - taxes	-	5,342	1,691	-	-
Total liabilities	$ 21,331	$ 81,301	$ 2,691	$ 28,162	$ 2,054

Range	School General	School Debt Service	Lincoln County TV District	Pahranagat Fire District	Public Land	Hospital
$ 7,788	$ 4,120	$ 63,403	$ 169	$ 1,282	$ 208	$ 1,472
98	-	863	-	18	-	-
-	25,057	7,454	-	625	-	8,950
-	1,638	14,621	-	9,576	-	585
$ 7,886	$ 30,815	$ 86,341	$ 169	$ 11,501	$ 208	$ 11,007
$ 7,886	$ 10,259	$ 80,226	$ 169	$ 11,085	$ 208	$ 3,665
-	20,556	6,115	-	416	-	7,342
$ 7,886	$ 30,815	$ 86,341	$ 169	$ 11,501	$ 208	$ 11,007

LINCOLN COUNTY, NEVADA
AGENCY FUNDS
COMBINING STATEMENT OF NET POSITION
June 30, 2018
(With Comparative Totals for June 30, 2017)

	Panaca Fire Protection District	Pioche Fire District	Pioche Fire District Capital Projects	Pioche Fire Emergency	Coyote Springs GID
ASSETS					
Pooled cash and investments	$ 10,814	$ 34,847	$ 1,546	$ 3,009	$ 102,997
Interest receivable	148	340	19	96	1,400
Taxes receivable	2,130	1,010	-	-	-
Due from other governments	-	5,128	-	-	-
Total assets	$ 13,092	$ 41,325	$ 1,565	$ 3,105	$ 104,397
LIABILITIES					
Amount held for others	$ 11,570	$ 40,356	$ 1,565	$ 3,105	$ 104,397
Unavailable revenue - taxes	1,522	969	-	-	-
Total liabilities	$ 13,092	$ 41,325	$ 1,565	$ 3,105	$ 104,397

SB 371	SLCHCP GID	Lincoln County Fire Protection District	Lincoln County Fire Protection District Emergency	Totals 2018	Totals 2017
$ 25	$ 158,238	$ 154,994	$ 25,012	$ 696,316	$ 1,040,361
-	2,154	4,892	827	10,894	9,579
-	-	2,385	-	56,719	49,198
-	-	-	-	31,548	39,478
$ 25	$ 160,392	$ 162,271	$ 25,839	$ 795,477	$ 1,138,616
$ 25	$ 160,392	$ 160,029	$ 25,839	$ 749,282	$ 1,096,972
-	-	2,242	-	46,195	41,644
$ 25	$ 160,392	$ 162,271	$ 25,839	$ 795,477	$ 1,138,616

LINCOLN COUNTY, NEVADA
COMBINING STATEMENT OF CHANGES IN ASSETS
AND LIABILITIES - ALL AGENCY FUNDS
Year Ended June 30, 2018

	Balance July 1, 2017	Additions	Deductions	Balance June 30, 2018
Tax Trust				
Assets:				
Pooled cash and investments	$ 38,988	$ 21,316	$ 39,010	$ 21,294
Interest receivable	91	37	91	37
Total assets	$ 39,079	$ 21,353	$ 39,101	$ 21,331
Liabilities:				
Amount held for others	$ 39,079	$ 21,353	$ 39,101	$ 21,331
State				
Assets:				
Pooled cash and investments	$ 84,196	$ 645,399	$ 654,805	$ 74,790
Taxes receivable	5,485	6,511	5,485	6,511
Total assets	$ 89,681	$ 651,910	$ 660,290	$ 81,301
Liabilities:				
Amount held for others	$ 84,997	$ 646,568	$ 655,606	$ 75,959
Unavailable revenue - taxes	4,684	5,342	4,684	5,342
Total liabilities	$ 89,681	$ 651,910	$ 660,290	$ 81,301
Caliente City				
Assets:				
Pooled cash and investments	$ 2,068	$ 147,543	$ 149,519	$ 92
Interest receivable	31	2	31	2
Taxes receivable	4,386	2,597	4,386	2,597
Total assets	$ 6,485	$ 150,142	$ 153,936	$ 2,691
Liabilities:				
Amount held for others	$ 3,274	$ 148,451	$ 150,725	$ 1,000
Unavailable revenue - taxes	3,211	1,691	3,211	1,691
Total liabilities	$ 6,485	$ 150,142	$ 153,936	$ 2,691
Caliente City Capital Projects				
Assets:				
Pooled cash and investments	$ 20,523	$ 7,639	$ -	$ 28,162
Liabilities:				
Amount held for others	$ 20,523	$ 7,639	$ -	$ 28,162
Fish and Game				
Assets:				
Pooled cash and investments	$ 2,970	$ 1,770	$ 2,686	$ 2,054
Liabilities:				
Amount held for others	$ 2,970	$ 1,770	$ 2,686	$ 2,054

LINCOLN COUNTY, NEVADA
COMBINING STATEMENT OF CHANGES IN ASSETS
AND LIABILITIES - ALL AGENCY FUNDS (CONTINUED)
Year Ended June 30, 2018

	Balance July 1, 2017	Additions	Deductions	Balance June 30, 2018
Range				
Assets:				
Pooled cash and investments	$ 8,120	$ 44,822	$ 45,154	$ 7,788
Interest receivable	122	98	122	98
Total assets	$ 8,242	$ 44,920	$ 45,276	$ 7,886
Liabilities:				
Amount held for others	$ 8,242	$ 44,920	$ 45,276	$ 7,886
School General				
Assets:				
Pooled cash and investments	$ 207,767	$ 1,658,030	$ 1,861,677	$ 4,120
Taxes receivable	21,102	25,057	21,102	25,057
Due from other governments	2,013	1,638	2,013	1,638
Total assets	$ 230,882	$ 1,684,725	$ 1,884,792	$ 30,815
Liabilities:				
Amount held for others	$ 212,856	$ 1,664,169	$ 1,866,766	$ 10,259
Unavailable revenue - taxes	18,026	20,556	18,026	20,556
Total liabilities	$ 230,882	$ 1,684,725	$ 1,884,792	$ 30,815
School Debt Service				
Assets:				
Pooled cash and investments	$ 67,418	$ 494,534	$ 498,549	$ 63,403
Interest receivable	1,076	863	1,076	863
Taxes receivable	6,276	7,454	6,276	7,454
Due from other governments	22,273	14,621	22,273	14,621
Total assets	$ 97,043	$ 517,472	$ 528,174	$ 86,341
Liabilities:				
Amount held for others	$ 91,682	$ 511,357	$ 522,813	$ 80,226
Unavailable revenue - taxes	5,361	6,115	5,361	6,115
Total liabilities	$ 97,043	$ 517,472	$ 528,174	$ 86,341
Lincoln County TV District				
Assets:				
Pooled cash and investments	$ 2,957	$ 53,474	$ 56,262	$ 169
Liabilities:				
Amount held for others	$ 2,957	$ 53,474	$ 56,262	$ 169

LINCOLN COUNTY, NEVADA
COMBINING STATEMENT OF CHANGES IN ASSETS
AND LIABILITIES - ALL AGENCY FUNDS (CONTINUED)
Year Ended June 30, 2018

	Balance July 1, 2017	Additions	Deductions	Balance June 30, 2018
Pahranagat Fire District				
Assets:				
Pooled cash and investments	$ 3,147	$ 123,360	$ 125,225	$ 1,282
Interest receivable	39	18	39	18
Taxes receivable	776	625	776	625
Due from other governments	9,459	9,576	9,459	9,576
Total assets	$ 13,421	$ 133,579	$ 135,499	$ 11,501
Liabilities:				
Amount held for others	$ 12,686	$ 133,163	$ 134,764	$ 11,085
Unavailable revenue - taxes	735	416	735	416
Total liabilities	$ 13,421	$ 133,579	$ 135,499	$ 11,501
Public Land				
Assets:				
Pooled cash and investments	$ 208	$ -	$ -	$ 208
Liabilities:				
Amount held for others	$ 208	$ -	$ -	$ 208
Hospital				
Assets:				
Pooled cash and investments	$ 74,211	$ 584,665	$ 657,404	$ 1,472
Taxes receivable	7,533	8,950	7,533	8,950
Due from other governments	719	585	719	585
Total assets	$ 82,463	$ 594,200	$ 665,656	$ 11,007
Liabilities:				
Amount held for others	$ 76,026	$ 586,858	$ 659,219	$ 3,665
Unavailable revenue - taxes	6,437	7,342	6,437	7,342
Total liabilities	$ 82,463	$ 594,200	$ 665,656	$ 11,007
Panaca Fire Protection District				
Assets:				
Pooled cash and investments	$ 11,813	$ 48,907	$ 49,906	$ 10,814
Interest receivable	187	148	187	148
Taxes receivable	1,419	2,130	1,419	2,130
Total assets	$ 13,419	$ 51,185	$ 51,512	$ 13,092
Liabilities:				
Amount held for others	$ 12,293	$ 49,663	$ 50,386	$ 11,570
Unavailable revenue - taxes	1,126	1,522	1,126	1,522
Total liabilities	$ 13,419	$ 51,185	$ 51,512	$ 13,092

LINCOLN COUNTY, NEVADA
COMBINING STATEMENT OF CHANGES IN ASSETS
AND LIABILITIES - ALL AGENCY FUNDS (CONTINUED)
Year Ended June 30, 2018

	Balance July 1, 2017	Additions	Deductions	Balance June 30, 2018
Pioche Fire District				
Assets:				
Pooled cash and investments	$ 40,193	$ 50,588	$ 55,934	$ 34,847
Interest receivable	416	340	416	340
Taxes receivable	1,189	1,010	1,189	1,010
Due from other governments	5,014	5,128	5,014	5,128
Total assets	$ 46,812	$ 57,066	$ 62,553	$ 41,325
Liabilities:				
Amount held for others	$ 45,779	$ 56,097	$ 61,520	$ 40,356
Unavailable revenue - taxes	1,033	969	1,033	969
Total liabilities	$ 46,812	$ 57,066	$ 62,553	$ 41,325
Pioche Fire District Capital Projects				
Assets:				
Pooled cash and investments	$ 1,734	$ 13	$ 201	$ 1,546
Interest receivable	28	19	28	19
Total assets	$ 1,762	$ 32	$ 229	$ 1,565
Liabilities:				
Amount held for others	$ 1,762	$ 32	$ 229	$ 1,565
Pioche Fire Emergency				
Assets:				
Pooled cash and investments	$ 3,017	$ -	$ 8	$ 3,009
Interest receivable	48	96	48	96
Total assets	$ 3,065	$ 96	$ 56	$ 3,105
Liabilities:				
Amount held for others	$ 3,065	$ 96	$ 56	$ 3,105
Coyote Springs GID				
Assets:				
Pooled cash and investments	$ 108,946	$ 29,341	$ 35,290	$ 102,997
Interest receivable	1,745	1,400	1,745	1,400
Total assets	$ 110,691	$ 30,741	$ 37,035	$ 104,397
Liabilities:				
Amount held for others	$ 110,691	$ 30,741	$ 37,035	$ 104,397
SB 371				
Assets:				
Pooled cash and investments	$ -	$ 700	$ 675	$ 25
Liabilities:				
Amount held for others	$ -	$ 700	$ 675	$ 25

LINCOLN COUNTY, NEVADA
COMBINING STATEMENT OF CHANGES IN ASSETS
AND LIABILITIES - ALL AGENCY FUNDS (CONTINUED)
Year Ended June 30, 2018

	Balance July 1, 2017	Additions	Deductions	Balance June 30, 2018
Southeastern Lincoln County Habitat Conservation Plan GID (SLCHCP)				
Assets:				
Pooled cash and investments	$ 177,792	$ 3,707	$ 23,261	$ 158,238
Interest receivable	2,848	2,154	2,848	2,154
Total assets	$ 180,640	$ 5,861	$ 26,109	$ 160,392
Liabilities:				
Amount held for others	$ 180,640	$ 5,861	$ 26,109	$ 160,392
Lincoln County Fire Protection District				
Assets:				
Pooled cash and investments	$ 156,173	$ 186,669	$ 187,848	$ 154,994
Interest receivable	2,498	4,892	2,498	4,892
Taxes receivable	1,032	2,385	1,032	2,385
Total assets	$ 159,703	$ 193,946	$ 191,378	$ 162,271
Liabilities:				
Amount held for others	$ 158,672	$ 191,704	$ 190,347	$ 160,029
Unavailable revenue - taxes	1,031	2,242	1,031	2,242
Total liabilities	$ 159,703	$ 193,946	$ 191,378	$ 162,271
Lincoln County Fire Protection District Emergency Fund				
Assets:				
Pooled cash and investments	$ 28,120	$ -	$ 3,108	$ 25,012
Interest receivable	450	827	450	827
Total assets	$ 28,570	$ 827	$ 3,558	$ 25,839
Liabilities:				
Amount held for others	$ 28,570	$ 827	$ 3,558	$ 25,839
Total all funds				
Assets:				
Pooled cash and investments	$ 1,040,361	$ 4,102,477	$ 4,446,522	$ 696,316
Interest receivable	9,579	10,894	9,579	10,894
Taxes receivable	49,198	56,719	49,198	56,719
Due from other governments	39,478	31,548	39,478	31,548
Total assets	$ 1,138,616	$ 4,201,638	$ 4,544,777	$ 795,477
Liabilities:				
Amount held for others	$ 1,096,972	$ 4,155,443	$ 4,503,133	$ 749,282
Unavailable revenue - taxes	41,644	46,195	41,644	46,195
Total liabilities	$ 1,138,616	$ 4,201,638	$ 4,544,777	$ 795,477

DANIEL C. McARTHUR, LTD.
Certified Public Accountant

Quail Park III • 501 So. Rancho Dr., Ste. E-30 • Las Vegas, NV 89106 • (702) 385-1899 • FAX (702) 385-9619

INDEPENDENT AUDITOR'S REPORT ON INTERNAL CONTROL OVER FINANCIAL REPORTING AND ON COMPLIANCE AND OTHER MATTERS BASED ON AN AUDIT OF FINANCIAL STATEMENTS PERFORMED IN ACCORDANCE WITH *GOVERNMENT AUDITING STANDARDS*

Honorable Board of County Commissioners
Lincoln County, Nevada
Pioche, Nevada

We have audited, in accordance with the auditing standards generally accepted in the United States of America and the standards applicable to financial audits contained in *Government Auditing Standards*, issued by the Comptroller General of the United States, the financial statements of the governmental activities, the business-type activities, each major fund, and the aggregate remaining fund information of Lincoln County, Nevada (the County), as of and for the year ended June 30, 2018, and the related notes to the financial statements, which collectively comprise the County's basic financial statements, and have issued our report thereon dated November 20, 2018.

Internal Control over Financial Reporting

In planning and performing our audit of the financial statements, we considered the County's internal control over financial reporting (internal control) to determine the audit procedures that are appropriate in the circumstances for the purpose of expressing our opinions on the financial statements, but not for the purpose of expressing an opinion on the effectiveness of the County's internal control. Accordingly, we do not express an opinion on the effectiveness of the County's internal control.

A *deficiency in internal control* exists when the design or operation of a control does not allow management or employees, in the normal course of performing their assigned functions, to prevent, or detect and correct misstatements on a timely basis. A *material weakness* is a deficiency, or a combination of deficiencies, in internal control, such that there is a reasonable possibility that a material misstatement of the entity's financial statements will not be prevented, or detected and corrected on a timely basis. A *significant deficiency* is a deficiency, or a combination of deficiencies, in internal control that is less severe than a material weakness, yet important enough to merit attention by those charged with governance.

Our consideration of internal control was for the limited purpose described in the first paragraph of this section and was not designed to identify all deficiencies in internal control that might be material weaknesses or, significant deficiencies. Given these limitations, during our audit we did not identify any deficiencies in internal control that we consider to be material weaknesses. However, material weaknesses may exist that have not been identified.

Compliance and Other Matters

As part of obtaining reasonable assurance about whether the County's financial statements are free from material misstatement, we performed tests of its compliance with certain provisions of laws, regulations, contracts, and grant agreements, noncompliance with which could have a direct and material effect on the determination of financial statement amounts. However, providing an opinion on compliance with those provisions was not an objective of our audit, and accordingly, we do not express such an opinion. The results of our tests disclosed no instances of noncompliance or other matters that are required to be reported under *Government Auditing Standards.*

Purpose of this Report

The purpose of this report is solely to describe the scope of our testing of internal control and compliance and the results of that testing, and not to provide an opinion on the effectiveness of the entity's internal control or on compliance. This report is an integral part of an audit performed in accordance with *Government Auditing Standards* in considering the entity's internal control and compliance. Accordingly, this communication is not suitable for any other purpose.

Las Vegas, Nevada
November 20, 2018

DANIEL C. McARTHUR, LTD.
Certified Public Accountant

Quail Park III • 501 So. Rancho Dr., Ste. E-30 • Las Vegas, NV 89106 • (702) 385-1899 • FAX (702) 385-9619

AUDITOR'S COMMENTS

Honorable Board of County Commissioners
Lincoln County, Nevada
Pioche, Nevada

In connection with our audit of the financial statements of the governmental activities, the business-type activities, each major fund, and the aggregate remaining fund information of Lincoln County, Nevada (the County) as of and for the year ended June 30, 2018, and the related notes to the financial statements, nothing came to our attention that caused us to believe that the County failed to comply with the specific requirements of Nevada Revised Statutes referenced below insofar as they relate to accounting matters except as noted below. However, our audit was not directed primarily toward obtaining knowledge of such noncompliance. Accordingly, had we performed additional procedures, other matters may have come to our attention regarding the County's noncompliance with the requirements of Nevada Revised Statutes noted below, insofar as they relate to accounting matters.

CURRENT YEAR STATUTE COMPLIANCE

Expenditures in Excess of Appropriations

Per NRS 354.626, the County is required to report expenditures that exceeded budgeted appropriations at the function level for the General Fund, Special Revenue Funds, and Capital Project Funds. Enterprise funds may not exceed budget appropriations at the fund level. For the year ending June 30, 2018, the County had the following expenditures over appropriations that are required to be reported.

General Fund – Health function	$ 9,748
Room Tax Fund – Culture and recreation function	$ 27,041
Room Tax Fund – Intergovernmental function	$ 585
Legal Aid Services Fund – Judicial function	$ 4,540
Genetic Marker Fund – General government function	$ 338
Detention Center – Enterprise Fund	$ 140,247

The General Fund over expenditure is related to an increase in the monthly payments for State Health Nurse. The Room Tax Fund over expenditure is related to an increase in Room Tax expenditures for local events and an increase in room tax revenues causing additional payments to the State. The Legal Aid Fund over expenditure is related to unanticipated legal services. Genetic Marker Fund over expenditures were due to an increase in required testing. The Detention Center expenditures were in excess of the authorized budget due to additional costs associated with an increase in inmate populations.

Deficit Fund Balance/Net Position

Airport Special Revenue Fund	$ 269
Detention Center Enterprise Fund	$ 2,359,765
Building Department Enterprise Fund	$ 77,293

The deficit net position of the Detention Center and Building Department Enterprise funds are due to the individual fund's proportionate share of the net pension liability of the Public Employees' Retirement System of the State of Nevada. The Airport fund deficit is due to a short fall in expected revenues.

PROGRESS ON PRIOR YEAR STATUTE COMPLIANCE

The County had similar findings in the current year as listed above.

CURRENT YEAR RECOMMENDATIONS

We noted no material weakness and reported no significant deficiencies in internal controls.

PRIOR YEAR RECOMMENDATIONS

We noted no material weakness and reported no significant deficiencies in internal controls in the prior year.

NEVADA REVISED STATUTE 354.6115 - STABILIZATION FUND

The County created a stabilization fund in accordance with Nevada Revised Statute 354.6115, "Fund to stabilize operations of local government and mitigate effects of natural disaster". The fund is reported on pages 237 and 238 of the financial statements as an "internally reported (budgetary basis) fund reported as part of the General Fund for external reporting purposes. Compliance with Nevada Revised Statutes is contained in Note C1 to the financial statements.

NEVADA REVISED STATUTE 354.5989 – BUSINESS LICENSES

Nevada Revised Statutes 354.624.4(a) requires a schedule of all fees imposed by the County which are subject to the provisions of NRS 354.5989 be addressed by the independent auditor. During the year ended June 30, 2018, the County did not raise fees on business licenses subject to the limitation of NRS 354.5989. The County business fee is $40.

NEVADA REVISED STATUTE 354.59815 – CAPITAL PROJECTS FUND

Capital Improvements Fund

The County established the Capital Improvements Fund in accordance with Nevada Revised Statutes 354.59815. Compliance with Nevada Revised Statutes is contained in Note C1 to the financial statements. The County does not plan to accumulate money in the fund. Projects funded during the year were as follows:

Intergovernmental – Payment to City	$ 7,637

Pioche Town Capital Projects Fund

The County established the Pioche Town Capital Projects Fund in accordance with Nevada Revised Statutes 354.59815. Compliance with Nevada Revised Statutes is contained in Note C1 to the financial statements. The County does not plan to accumulate money in the fund. There were no projects funded during the year.

Panaca Town Capital Projects Fund

The County established the Panaca Town Capital Projects Fund in accordance with Nevada Revised Statutes 354.59815. Compliance with Nevada Revised Statutes is contained in Note C1 to the financial statements. The County does not plan to accumulate money in the fund. Projects funded during the year were as follows:

Ballfield improvements	$ 4,227

Alamo Town Capital Projects Fund

The County established the Alamo Town Capital Projects Fund in accordance with Nevada Revised Statutes 354.59815. Compliance with Nevada Revised Statutes is contained in Note C1 to the financial statements. The County does not plan to accumulate money in the fund. There were no projects funded during the year.

Las Vegas, Nevada
November 20, 2018

LINCOLN COUNTY, NEVADA

REPORT ON FINANCIAL STATEMENTS WITH SUPPLEMENTAL INFORMATION AND INFORMATION PERTAINING TO FEDERAL AWARDS

JUNE 30, 2018

LINCOLN COUNTY, NEVADA
REPORT ON FINANCIAL STATEMENTS
YEAR ENDED JUNE 30, 2018
TABLE OF CONTENTS

	PAGE
INTRODUCTORY SECTION	
Organization	1
FINANCIAL SECTION	
Independent Auditor's Report	2-4
Management's Discussion and Analysis	5-13
BASIC FINANCIAL STATEMENTS:	
GOVERNMENT-WIDE FINANCIAL STATEMENTS:	
Statement of Net Position	14
Statement of Activities	15
FUND FINANCIAL STATEMENTS:	
GOVERNMENTAL FUNDS:	
Balance Sheet	16-17
Reconciliation of the Governmental Funds Balance Sheet to the Statement of Net Position	18
Statement of Revenues, Expenditures, and Changes in Fund Balances	19-20
Reconciliation of the Statement of Revenues, Expenditures, and Changes in Fund Balance of Governmental Funds to the Statement of Activities	21
PROPRIETARY FUNDS:	
Statement of Net Position	22-23
Statement of Revenues, Expenses, and Changes in Net Position	24-25
Statement of Cash Flows	26-27
FIDUCIARY FUND:	
Statement of Fiduciary Net Position	28
Statement of Changes in Fiduciary Net Position	29
Notes to the Basic Financial Statements	30-61
REQUIRED SUPPLEMENTARY INFORMATION:	
Schedule of Revenues, Expenditures, and Changes in Fund Balance - Budget (GAAP Basis) and Actual	
General Fund (Budgetary Basis)	62-67
Road Special Revenue Fund	68
Federal In Lieu Tax Special Revenue Fund	69
Lincoln County Water District Water Resources Special Revenue Fund	70
Lincoln County Land Act Special Revenue Fund	71
County Grant Special Revenue Fund	72
Reconciliation of the General Fund (Budgetary Basis) to the General Fund (GAAP Basis)	73
Schedule of Changes in the County's Total OPEB Liability and Related Ratios	74
Schedule of the County's Contributions to the Public Employees' Retirement System of the State of Nevada	75
Schedule of the County's Porportionate Share of the Net Pension Liability	76
Notes to Required Supplementary Information	77
SUPPLEMENTARY INFORMATION:	
COMBINING AND INDIVIDUAL FUND STATEMENTS AND SCHEDULES:	
NONMAJOR GOVERNMENTAL FUNDS:	
Combining Balance Sheet	78
Combining Statement of Revenues, Expenditures, and Changes in Fund Balance	79
GOVERNMENTAL FUNDS:	
Reconciliation of the General Fund (Budgetary Basis) to the General Fund (GAAP Basis) - Balance Sheet	80

SUPPLEMENTARY INFORMATION (Continued):
COMBINING AND INDIVIDUAL FUND STATEMENTS AND SCHEDULES (Continued):
MAJOR GOVERNMENTAL FUNDS:
General Fund:
Comparative Balance Sheets 81
Schedule of Revenues, Expenditures, and Changes in Fund Balance - Budget (Budgetary Basis) and Actual 82
Schedule of Revenues Compared to Budget (Budgetary Basis) 83
Schedule of Expenditures Compared to Budget (Budgetary Basis) 84-87
Road Special Revenue Fund:
Comparative Balance Sheets 88
Schedule of Revenues, Expenditures, and Changes in Fund Balance - Budget (GAAP Basis) and Actual 89
Federal In Lieu Tax Special Revenue Fund:
Comparative Balance Sheets 90
Schedule of Revenues, Expenditures, and Changes in Fund Balance - Budget (GAAP Basis) and Actual 91-92
Lincoln County Water District Water Resources Special Revenue Fund:
Comparative Balance Sheets 93
Schedule of Revenues, Expenditures, and Changes in Fund Balance - Budget (GAAP Basis) and Actual 94
Lincoln County Land Act Special Use Revenue Fund:
Comparative Balance Sheets 95
Schedule of Revenues, Expenditures, and Changes in Fund Balance - Budget (GAAP Basis) and Actual 96
County Grant Special Revenue Fund:
Comparative Balance Sheets 97
Schedule of Revenues, Expenditures, and Changes in Fund Balance - Budget (GAAP Basis) and Actual 98
MAJOR ENTERPRISE FUND:
Detention Center Enterprise Fund:
Comparative Statement of Net Position 99
Schedule of Revenues, Expenses and Changes in Net Position 100
Comparative Statement of Cash Flows 101
Pioche Public Utility Electric:
Comparative Statement of Net Position 102
Schedule of Revenues, Expenses and Changes in Net Position 103
Comparative Statement of Cash Flows 104
Solid Waste:
Statement of Net Position 105
Schedule of Revenues, Expenses and Changes in Net Position 106
Statement of Cash Flows 107
NONMAJOR SPECIAL REVENUE FUNDS:
Combining Balance Sheet 108-117
Combining Schedule of Revenues, Expenditures, and Changes in Fund Balances 118-127
Pioche Town:
Comparative Balance Sheets 128
Schedule of Revenues, Expenditures, and Changes in Fund Balance - Budget (GAAP Basis) and Actual 129-130
Alamo Town:
Comparative Balance Sheets 131
Schedule of Revenues, Expenditures, and Changes in Fund Balance - Budget (GAAP Basis) and Actual 132-133
Panaca Town:
Comparative Balance Sheets 134
Schedule of Revenues, Expenditures, and Changes in Fund Balance - Budget (GAAP Basis) and Actual 135-136
Resource Development Authority:
Comparative Balance Sheets 137
Schedule of Revenues, Expenditures, and Changes in Fund Balance - Budget (GAAP Basis) and Actual 138
County Library:
Comparative Balance Sheets 139
Schedule of Revenues, Expenditures, and Changes in Fund Balance - Budget (GAAP Basis) and Actual 140

SUPPLEMENTARY INFORMATION (Continued):
COMBINING AND INDIVIDUAL FUND STATEMENTS AND SCHEDULES (Continued):
NONMAJOR SPECIAL REVENUE FUNDS:
Museum:
Comparative Balance Sheets 141
Schedule of Revenues, Expenditures, and Changes in Fund Balance - Budget (GAAP Basis) and Actual 142
Senior Nutrition:
Comparative Balance Sheets 143
Schedule of Revenues, Expenditures, and Changes in Fund Balance - Budget (GAAP Basis) and Actual 144
Transportation:
Comparative Balance Sheets 145
Schedule of Revenues, Expenditures, and Changes in Fund Balance - Budget (GAAP Basis) and Actual 146
Agricultural Extension:
Comparative Balance Sheets 147
Schedule of Revenues, Expenditures, and Changes in Fund Balance - Budget (GAAP Basis) and Actual 148
Indigent:
Comparative Balance Sheets 149
Schedule of Revenues, Expenditures, and Changes in Fund Balance - Budget (GAAP Basis) and Actual 150
Medical Indigent:
Comparative Balance Sheets 151
Schedule of Revenues, Expenditures, and Changes in Fund Balance - Budget (GAAP Basis) and Actual 152
China Springs:
Comparative Balance Sheets 153
Schedule of Revenues, Expenditures, and Changes in Fund Balance - Budget (GAAP Basis) and Actual 154
Ambulance:
Comparative Balance Sheets 155
Schedule of Revenues, Expenditures, and Changes in Fund Balance - Budget (GAAP Basis) and Actual 156
Regional Transportation Commission:
Comparative Balance Sheets 157
Schedule of Revenues, Expenditures, and Changes in Fund Balance - Budget (GAAP Basis) and Actual 158
Room Tax:
Comparative Balance Sheets 159
Schedule of Revenues, Expenditures, and Changes in Fund Balance - Budget (GAAP Basis) and Actual 160
Legal Aid Services:
Comparative Balance Sheets 161
Schedule of Revenues, Expenditures, and Changes in Fund Balance - Budget (GAAP Basis) and Actual 162
Forensic Services:
Comparative Balance Sheets 163
Schedule of Revenues, Expenditures, and Changes in Fund Balance - Budget (GAAP Basis) and Actual 164
Administrative Assessment:
Comparative Balance Sheets 165
Schedule of Revenues, Expenditures, and Changes in Fund Balance - Budget (GAAP Basis) and Actual 166
Forfeiture:
Comparative Balance Sheets 167
Schedule of Revenues, Expenditures, and Changes in Fund Balance - Budget (GAAP Basis) and Actual 168
Recorder Technology:
Comparative Balance Sheets 169
Schedule of Revenues, Expenditures, and Changes in Fund Balance - Budget (GAAP Basis) and Actual 170
L.C. Housing Authority:
Comparative Balance Sheets 171
Schedule of Revenues, Expenditures, and Changes in Fund Balance - Budget (GAAP Basis) and Actual 172
Alamo Clinic:
Comparative Balance Sheets 173
Schedule of Revenues, Expenditures, and Changes in Fund Balance - Budget (GAAP Basis) and Actual 174
Fair Board:
Comparative Balance Sheets 175
Schedule of Revenues, Expenditures, and Changes in Fund Balance - Budget (GAAP Basis) and Actual 176

SUPPLEMENTARY INFORMATION (Continued):
COMBINING AND INDIVIDUAL FUND STATEMENTS AND SCHEDULES (Continued):
NONMAJOR SPECIAL REVENUE FUNDS (Continued):
Multi-species Habitat Conservation :
Comparative Balance Sheets 177
Schedule of Revenues, Expenditures, and Changes in Fund Balance - Budget (GAAP Basis) and Actual 178
Multi-species Habitat Conservation Section 7:
Comparative Balance Sheets 179
Schedule of Revenues, Expenditures, and Changes in Fund Balance - Budget (GAAP Basis) and Actual 180
Youth Activities Counsel:
Comparative Balance Sheet 181
Schedule of Revenues, Expenditures, and Changes in Fund Balance - Budget (GAAP Basis) and Actual 182
Genetic Marker Testing :
Comparative Balance Sheet 183
Schedule of Revenues, Expenditures, and Changes in Fund Balance - Budget (GAAP Basis) and Actual 184
Public Improvement:
Comparative Balance Sheet 185
Schedule of Revenues, Expenditures, and Changes in Fund Balance - Budget (GAAP Basis) and Actual 186
Airport:
Comparative Balance Sheet 187
Schedule of Revenues, Expenditures, and Changes in Fund Balance - Budget (GAAP Basis) and Actual 188
Panaca Town Building:
Comparative Balance Sheet 189
Schedule of Revenues, Expenditures, and Changes in Fund Balance - Budget (GAAP Basis) and Actual 190
Court Facility Fees:
Comparative Balance Sheet 191
Schedule of Revenues, Expenditures, and Changes in Fund Balance - Budget (GAAP Basis) and Actual 192
Tri-County Weed Control:
Comparative Balance Sheet 193
Schedule of Revenues, Expenditures, and Changes in Fund Balance - Budget (GAAP Basis) and Actual 194
Lincoln County Land Act - General:
Comparative Balance Sheet 195
Schedule of Revenues, Expenditures, and Changes in Fund Balance - Budget (GAAP Basis) and Actual 196
Lincoln County Land Act - Planning and Development:
Comparative Balance Sheet 197
Schedule of Revenues, Expenditures, and Changes in Fund Balance - Budget (GAAP Basis) and Actual 198
Lincoln County Land Act - Education:
Comparative Balance Sheet 199
Schedule of Revenues, Expenditures, and Changes in Fund Balance - Budget (GAAP Basis) and Actual 200
Lincoln County Land Act - Grant Match:
Comparative Balance Sheet 201
Schedule of Revenues, Expenditures, and Changes in Fund Balance - Budget (GAAP Basis) and Actual 202
Lincoln County Water - General:
Comparative Balance Sheet 203
Schedule of Revenues, Expenditures, and Changes in Fund Balance - Budget (GAAP Basis) and Actual 204
Lincoln County Water - Special Projects:
Comparative Balance Sheet 205
Schedule of Revenues, Expenditures, and Changes in Fund Balance - Budget (GAAP Basis) and Actual 206
Lincoln County Water - Planning and Development:
Comparative Balance Sheet 207
Schedule of Revenues, Expenditures, and Changes in Fund Balance - Budget (GAAP Basis) and Actual 208
Lincoln County Water - Special Use:
Comparative Balance Sheet 209
Schedule of Revenues, Expenditures, and Changes in Fund Balance - Budget (GAAP Basis) and Actual 210

SUPPLEMENTARY INFORMATION (Continued):
COMBINING AND INDIVIDUAL FUND STATEMENTS AND SCHEDULES (Continued):
NONMAJOR SPECIAL REVENUE FUNDS (Continued):
Lincoln County Water - Grant Match:
Comparative Balance Sheet 211
Schedule of Revenues, Expenditures, and Changes in Fund Balance - Budget (GAAP Basis) and Actual 212
Lincoln County Water District - General :
Comparative Balance Sheets 213
Schedule of Revenues, Expenditures, and Changes in Fund Balance - Budget (GAAP Basis) and Actual 214
Lincoln County Water District - Planning & Development :
Comparative Balance Sheets 215
Schedule of Revenues, Expenditures, and Changes in Fund Balance - Budget (GAAP Basis) and Actual 216
Lincoln County Water District - Special Projects :
Comparative Balance Sheets 217
Schedule of Revenues, Expenditures, and Changes in Fund Balance - Budget (GAAP Basis) and Actual 218
Assessor Technology:
Comparative Balance Sheets 219
Schedule of Revenues, Expenditures, and Changes in Fund Balance - Budget (GAAP Basis) and Actual 220
District Court Technology:
Comparative Balance Sheets 221
Schedule of Revenues, Expenditures, and Changes in Fund Balance - Budget (GAAP Basis) and Actual 222
District Court Specialty Court:
Comparative Balance Sheets 223
Schedule of Revenues, Expenditures, and Changes in Fund Balance - Budget (GAAP Basis) and Actual 224
Court Security Fee:
Comparative Balance Sheets 225
Schedule of Revenues, Expenditures, and Changes in Fund Balance - Budget (GAAP Basis) and Actual 226
District Court Enrichment:
Comparative Balance Sheets 227
Schedule of Revenues, Expenditures, and Changes in Fund Balance - Budget (GAAP Basis) and Actual 228
Nuclear Waste Special Revenue Fund:
Comparative Balance Sheets 229
Schedule of Revenues, Expenditures, and Changes in Fund Balance - Budget (GAAP Basis) and Actual 230
Property Management:
Comparative Balance Sheets 231
Schedule of Revenues, Expenditures, and Changes in Fund Balance - Budget (GAAP Basis) and Actual 232

Internally Reported (Budgetary Basis) Funds Reported as Part of the General Fund for External Reporting Purposes (Continued):
Combining Balance Sheet 233-234
Combining Schedule of Revenues, Expenditures and Changes in Fund Balance 235-236
Stabilization:
Comparative Balance Sheets 237
Schedule of Revenues, Expenditures, and Changes in Fund Balance - Budget (GAAP Basis) and Actual 238
Planning:
Comparative Balance Sheets 239
Schedule of Revenues, Expenditures, and Changes in Fund Balance - Budget (GAAP Basis) and Actual 240
Rachel Jones Memorial Cemetery:
Comparative Balance Sheets 241
Schedule of Revenues, Expenditures, and Changes in Fund Balance - Budget (GAAP Basis) and Actual 242
Flood Control:
Comparative Balance Sheets 243
Schedule of Revenues, Expenditures, and Changes in Fund Balance - Budget (GAAP Basis) and Actual 244
Special Projects:
Comparative Balance Sheets 245
Schedule of Revenues, Expenditures, and Changes in Fund Balance - Budget (GAAP Basis) and Actual 246

SUPPLEMENTARY INFORMATION (Continued):
COMBINING AND INDIVIDUAL FUND STATEMENTS AND SCHEDULES (Continued):
Internally Reported (Budgetary Basis) Funds Reported as Part of the General Fund for External Reporting Purposes (Continued):
Lincoln County Land Act - Emergency Disaster:
Comparative Balance Sheet 247
Schedule of Revenues, Expenditures, and Changes in Fund Balance - Budget (GAAP Basis) and Actual 248
Lincoln County Water - Emergency Disaster:
Comparative Balance Sheet 249
Schedule of Revenues, Expenditures, and Changes in Fund Balance - Budget (GAAP Basis) and Actual 250
NONMAJOR CAPITAL PROJECTS FUNDS:
Combining Balance Sheet 251-253
Combining Statement of Revenues, Expenditures, and Changes in Fund Balances 254-256
Capital Improvements:
Comparative Balance Sheets 257
Schedule of Revenues, Expenditures, and Changes in Fund Balance - Budget (GAAP Basis) and Actual 258
Pioche Town Grant:
Comparative Balance Sheets 259
Schedule of Revenues, Expenditures, and Changes in Fund Balance - Budget (GAAP Basis) and Actual 260
Pioche Town:
Comparative Balance Sheets 261
Schedule of Revenues, Expenditures, and Changes in Fund Balance - Budget (GAAP Basis) and Actual 262
Alamo Town:
Comparative Balance Sheets 263
Schedule of Revenues, Expenditures, and Changes in Fund Balance - Budget (GAAP Basis) and Actual 264
Panaca Town:
Comparative Balance Sheets 265
Schedule of Revenues, Expenditures, and Changes in Fund Balance - Budget (GAAP Basis) and Actual 266
Ambulance:
Comparative Balance Sheets 267
Schedule of Revenues, Expenditures, and Changes in Fund Balance - Budget (GAAP Basis) and Actual 268
Fair Board:
Comparative Balance Sheets 269
Schedule of Revenues, Expenditures, and Changes in Fund Balance - Budget (GAAP Basis) and Actual 270
Vehicle Capital Projects:
Comparative Balance Sheets 271
Schedule of Revenues, Expenditures, and Changes in Fund Balance - Budget (GAAP Basis) and Actual 272
Road Equipment:
Comparative Balance Sheets 273
Schedule of Revenues, Expenditures, and Changes in Fund Balance - Budget (GAAP Basis) and Actual 274
Airport:
Comparative Balance Sheets 275
Schedule of Revenues, Expenditures, and Changes in Fund Balance - Budget (GAAP Basis) and Actual 276
Lincoln County Land Act:
Comparative Balance Sheets 277
Schedule of Revenues, Expenditures, and Changes in Fund Balance - Budget (GAAP Basis) and Actual 278
Lincoln County Water:
Comparative Balance Sheets 279
Schedule of Revenues, Expenditures, and Changes in Fund Balance - Budget (GAAP Basis) and Actual 280
Lincoln County Water District:
Comparative Balance Sheets 281
Schedule of Revenues, Expenditures, and Changes in Fund Balance - Budget (GAAP Basis) and Actual 282
Nonmajor Enterprise Funds:
Combining Statement of Net Position 283-284
Combining Schedule of Revenues, Expenses and Changes in Net Position 285-286
Combining Statement of Cash Flows 287-288

SUPPLEMENTARY INFORMATION (Continued):
COMBINING AND INDIVIDUAL FUND STATEMENTS AND SCHEDULES (Continued):

Pioche Public Utility Water:
Comparative Statement of Net Position 289
Schedule of Revenues, Expenses and Changes in Net Position 290
Comparative Statement of Cash Flows 291
Pioche Public Utility Sewer:
Comparative Statement of Net Position 292
Schedule of Revenues, Expenses and Changes in Net Position 293
Comparative Statement of Cash Flows 294
Building Department:
Comparative Statement of Net Position 295
Schedule of Revenues, Expenses and Changes in Net Position 296
Comparative Statement of Cash Flows 297

AGENCY FUNDS:
Combining Statement of Net Position 298-301
Combining Statement of Changes in Assets and Liabilities 302-306

ACCOMPANYING INFORMATION - FEDERAL AWARDS
Schedule of Expenditures of Federal Awards 307-310
Schedule of Prior Year Audit Findings and Questioned Costs 311
Report on Internal Control Over Financial Reporting and on Compliance and Other Matters Based on an Audit of Financial Statements Performed in Accordance with *Government Auditing Standards* 312-313
Independent Auditor's Report on Compliance on Each Major Program and on Internal Control Over Compliance Required by the Uniform Guidance 314-315
Schedule of Findings and Questioned Costs 316-317

Independent Auditor’s Comments 318-319

LINCOLN COUNTY, NEVADA
ORGANIZATION

COUNTY OFFICERS at June 30, 2018:

Commissioners	Paul Donohue, Chairman
	Varlin Higbee, Vice Chairman
	Nathan Katschke, Member
	Kevin Phillips, Member
	Jared Brackenbury, Member
Clerk	Lisa Lloyd
Treasurer	Shawn Frehner
Auditor/Recorder	Leslie Boucher
Assessor	Mark Holt
Sheriff	Kerry Lee
District Attorney	Daniel Hooge
Justice of the Peace	Mike Cowley
Justice of the Peace	Nola Holton

DANIEL C. McARTHUR, LTD
Certified Public Accountant

Quail Park III • 501 So. Rancho Dr., Ste. E-30 • Las Vegas, NV 89106 • (702) 385-1899 • (702) 385-9619

INDEPENDENT AUDITOR'S REPORT

Honorable Board of County Commissioners
Lincoln County, Nevada
Pioche, Nevada

Report on the Financial Statements

We have audited the accompanying financial statements of the governmental activities, the business-type activities, each major fund, and the aggregate remaining fund information of Lincoln County, Nevada (the County), as of and for the year ended June 30, 2018, and the related notes to the financial statements, which collectively comprise the County's basic financial statements as listed in the table of contents.

Management's Responsibility for the Financial Statements

Management is responsible for the preparation and fair presentation of these financial statements in accordance with accounting principles generally accepted in the United States of America; this includes the design, implementation, and maintenance of internal control relevant to the preparation and fair presentation of financial statements that are free from material misstatement, whether due to fraud or error.

Auditor's Responsibility

Our responsibility is to express opinions on these financial statements based on our audit. We conducted our audit in accordance with auditing standards generally accepted in the United States of America and the standards applicable to financial audits contained in *Government Auditing Standards*, issued by the Comptroller General of the United States. Those standards require that we plan and perform the audit to obtain reasonable assurance about whether the financial statements are free from material misstatement.

An audit involves performing procedures to obtain audit evidence about the amounts and disclosures in the financial statements. The procedures selected depend on the auditor's judgment, including the assessment of the risks of material misstatement of the financial statements, whether due to fraud or error. In making those risk assessments, the auditor considers internal control relevant to the entity's preparation and fair presentation of the financial statements in order to design audit procedures that are appropriate in the circumstances, but not for the purpose of expressing an opinion on the effectiveness of the entity's internal control. Accordingly, we express no such opinion. An audit also includes evaluating the appropriateness of accounting policies used and the reasonableness of significant accounting estimates made by management, as well as evaluating the overall presentation of the financial statements.

We believe that the audit evidence we have obtained is sufficient and appropriate to provide a basis for our audit opinions.

Opinions

In our opinion, the financial statements referred to above present fairly, in all material respects, the respective financial position of the governmental activities, the business-type activities, each major fund and the aggregate remaining fund information of Lincoln County, Nevada, as of June 30, 2018, and the respective changes in financial position and, where applicable, cash flows thereof, for the year then ended in accordance with accounting principles generally accepted in the United States of America.

Emphasis of Matter – Correction of Errors

As described in Note D-17 to the financial statements, certain errors occurred in the determination or classification of payments to satisfy employee contribution requirements in the adoption, as of July 1, 2016, of Governmental Accounting Standards Board (GASB) Statement No. 82, *Pension Issues – An Amendment of GASB No. 67, No. 68, and No. 73.* Net position as of July 1, 2017, has been restated to reflect the correction of deferred outflows of resources. Our opinions are not modified with respect to this matter.

Emphasis of Matter - Change in Accounting Principle

As described in Note D-16 to the financial statements, in 2018, the County adopted new accounting guidance, Governmental Accounting Standards Board Statement No. 75, *Accounting and Financial Reporting for Postemployment Benefits Other than Pensions.* Our opinions are not modified with respect to this matter.

Other Matters

Required Supplementary Information

Accounting principles generally accepted in the United States of America require that the management's discussion and analysis on pages 5-13, budgetary comparisons information on pages 62-72, Reconciliation of the General Fund (Budgetary Basis) to the General Fund (GAAP Basis) on page 73, Schedule of Changes in the County's Total OPEB Liability and Related Ratios on page 74, Schedule of the County's Contributions to the Public Employees' Retirement System of the State of Nevada on Page 75, and Schedule of the County's Proportionate Share of the Net Pension Liability Public Employees' Retirement System of the State of Nevada on page 76 be presented to supplement the basic financial statements. Such information, although not a part of the basic financial statements, is required by the Governmental Accounting Standards Board, who considers it to be an essential part of financial reporting for placing the basic financial statements in an appropriate operational, economic, or historical context. We have applied certain limited procedures to the required supplementary information in accordance with auditing standards generally accepted in the United States of America, which consisted of inquiries of management about the methods of preparing the information and comparing the information for consistency with management's responses to our inquiries, the basic financial statements, and other knowledge we obtained during our audit of the basic financial statements. We do not express an opinion or provide any assurance on the information because the limited procedures do not provide us with sufficient evidence to express an opinion or provide any assurance.

Other Information

Our audit was conducted for the purpose of forming opinions on the financial statements that collectively comprise the County's basic financial statements. The combining and individual fund financial statements and schedules are presented for purposes of additional analysis and are not a required part of the basic financial statements. The schedule of expenditures of federal awards is presented for purposes of additional analysis as required by Title 2 U.S. *Code of Federal Regulations* (CFR) Part 200, *Uniform Administrative Requirements, Cost Principles, and Audit Requirements for Federal Awards* (Uniform Guidance), and is also not a required part of the basic financial statements.

The combining and individual fund financial statements and schedules, and the schedule of expenditures of federal awards are the responsibility of management and were derived from and relate directly to the underlying accounting and other records used to prepare the basic financial statements. Such information has been subjected to the auditing procedures applied in the audit of the basic financial statements and certain additional procedures, including comparing and reconciling such information directly to the underlying accounting and other records used to prepare the basic financial statements or to the basic financial statements themselves, and other additional procedures in accordance with auditing standards generally accepted in the United States of America. In our opinion, the combining and individual fund financial statements and schedules, and schedule of expenditures of federal awards are fairly stated in all material respects in relation to the basic financial statements as a whole.

Comparative Prior Year Information

We also have previously audited, in accordance with auditing standards generally accepted in the United States of America, the County's basic financial statements for the year ended June 30, 2017, which are not presented with the accompanying financial statements and we expressed unmodified opinions on the respective financial statements of the governmental activities, the business-type activities, each major fund and the aggregate remaining fund information. That audit was conducted for the purpose of forming opinions on the financial statements that collectively comprise the County's basic financial statements as a whole. The combining and individual fund financial statements and schedules, for the year ended June 30, 2017, are presented for purposes of additional analysis and are not a required part of the basic financial statements. Such information is the responsibility of management and was derived from and relates directly to the underlying accounting and other records used to prepare the 2017 basic financial statements. The information has been subjected to the auditing procedures applied in the audit of those basic financial statements and certain additional procedures, including comparing and reconciling such information directly to the underlying accounting and other records used to prepare the basic financial statements or to the basic financial statements themselves, and other additional procedures in accordance with auditing standards generally accepted in the United States of America. In our opinion, the 2017 combining and individual fund financial statements and schedules are fairly stated in all material respects in relation to the basic financial statements from which they have been derived.

Other Reporting Required by *Government Auditing Standards*

In accordance with *Government Auditing Standards*, we have also issued our report dated November 20, 2018 on our consideration of the County's internal control over financial reporting and on our tests of its compliance with certain provisions of laws, regulations, contracts, and grant agreements and other matters. The purpose of that report is solely to describe the scope of our testing of internal control over financial reporting and compliance and the results of that testing, and not to provide an opinion on the effectiveness of the County's internal control over financial reporting or on compliance. That report is an integral part of an audit performed in accordance with *Government Auditing Standards* in considering the County's internal control over financial reporting and compliance.

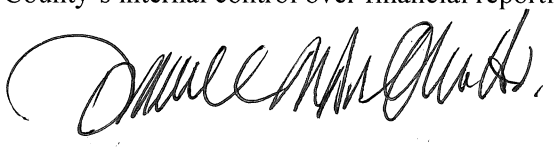

Las Vegas, Nevada
November 20, 2018

As management of Lincoln County, Nevada, we offer readers of Lincoln County, Nevada's financial statements this narrative overview and analysis of the financial activities of Lincoln County, Nevada, for the fiscal year end June 30, 2018. The Management's Discussion and Analysis ("MD&A") introduces the financial reports for Lincoln County, Nevada. The MD&A is designed to give the reader an easy-to-understand overview of the County's financial position and results of operations for the year. The MD&A is separated into Financial Highlights, an Overview of the Financial Statements, and a Government-Wide Financial Analysis.

Financial Highlights

The assets of the County exceeded its liabilities at the close of the 2018 fiscal year by $34,546,658 (net position). Total net position represent approximately $26,492,512 in capital assets, net of related debt, $5,659,012 in assets restricted for debt services, capital projects, public works, and for other purposes. The remaining $2,395,134 represents unrestricted net position, which may be used to meet the County's ongoing obligations to its citizens and creditors.

The government-wide net position of the County increased during the fiscal year 2018 by $2,200,152, or 6.80%.

At the end of fiscal year 2018, the County's governmental funds reported combined fund balances of $19,005,151; an increase of $350,906, or 1.88%, when compared to the previous year.

The County's primary revenue sources for governmental activities were ad valorem (property) taxes of $2,987,607, fuel taxes of $1,832,748, federal in lieu taxes of $1,804,715, charges for services of $1,697,650, capital grants and contributions of $1,628,024, consolidated taxes of $1,419,664, and operating grants and contributions of $1,394,184. These revenue sources comprised 22.36%, 13.72%, 13.51%, 12.71%, 12.19%, 10.63%, and 10.44% respectively, or 95.54%, of total governmental activities revenues. Business-type activities revenue from charges for services was $3,602,774.

The County's total government-wide expenses were $14,897,634. The greatest expenses were in the General Government $3,641,595, Public Works $2,201,132, and Public Safety $2,004,934 functions. Business-type activities contributed $3,639,520 to total expenses.

Overview of the Financial Statements

This discussion and analysis is intended to serve as an introduction to the County's basic financial statements which consists of government-wide financial statements, fund financial statements, and accompanying notes. This report also contains required supplementary information in addition to the basic financial statements.

Government-Wide Financial Statements: The government-wide financial statements are designed to provide readers with a broad overview of the County's finances in a manner similar to a private-sector business.

The Statement of Net Position presents information on all of the County's assets and liabilities with the difference reported as net position. Increases or decreases in net position may serve as a useful indicator of whether the financial position of the County is improving or deteriorating.

Overview of the Financial Statements (Continued)

The Statement of Activities presents information showing how the County's net position changed during the most recent fiscal year. All changes in net position are reported as soon as the underlying event giving rise to the change occurs, regardless of the timing of related cash flows. Thus, revenues and expenses are reported in this statement for some items that will only result in cash flows in future fiscal periods (e.g., uncollected taxes and earned but unused vacation and sick leave).

The government-wide financial statements report two types of activities: governmental activities and business-type activities. The government-wide financial statements distinguish functions of the County that are principally supported by taxes and intergovernmental revenues (governmental activities) from other functions that are intended to recover all or a significant portion of their costs through user fees and charges (business-type activities). The governmental activities of the County include general government, public safety, public works, judicial, health, sanitation, welfare, community support, culture and recreation, and intergovernmental. The business-type activities include operations of its detention center, utilities, solid waste, and building department operations.

Fund Financial Statements: A fund is a grouping of related accounts used to maintain control over resources that have been segregated for specific activities or objectives. The County, like other state and local governments, uses fund accounting to ensure and demonstrate compliance with finance-related legal requirements. All of the funds of the County can be divided into three categories: governmental funds, proprietary funds, and fiduciary funds.

Governmental Funds: Governmental funds are used to account for essentially the same functions reported as governmental activities in the government-wide financial statements. However, unlike the government-wide financial statements, governmental fund financial statements focus on near-term inflows and outflows of spendable resources, as well as on balances of spendable resources available at the end of the fiscal year. Such information may be useful in evaluating the County's near-term financial requirements.

Because the focus of governmental funds is narrower than that of the government-wide financial statements, it is useful to compare the information presented for governmental funds with similar information presented for governmental activities in the government-wide financial statements. By doing so, readers may better understand the long-term impact of the County's near-term financing decisions. Both the governmental fund balance sheet and the governmental fund statement of revenues, expenditures, and changes in fund balances provide a reconciliation to facilitate this comparison between governmental funds and governmental activities.

The County maintains individual governmental funds. Information is presented separately in the governmental balance sheet and the governmental fund statement of revenues, expenditures, and changes in fund balances for the General Fund, Road Fund, Federal in Lieu Tax Fund, Lincoln County Water District Water Resources Fund, Lincoln County Land Act Special Use Fund, and County Grant Fund, each of which is considered to be a major fund. Data from the other governmental funds are combined into a single, aggregated presentation. Individual fund data for each of these nonmajor governmental funds is provided in the combining and individual fund statements and schedules.

The County adopts an annual appropriated budget for each of its governmental funds. A budgetary comparison statement is provided for each of the County's governmental funds to demonstrate compliance with the budget. The budgetary comparison statements for the major governmental funds are presented as required supplementary information; the budgetary comparison statements for all other governmental funds are included in the fund financial statements accompanying information.

Overview of the Financial Statements (Continued)

Proprietary Funds: The County maintains one type of proprietary fund, the Enterprise Fund. The Enterprise Fund is used to report the same functions presented as business-type activities in the government-wide financial statements. The County uses the Enterprise Funds to account for its utility activities, building department activities, solid waste operation, and operation of the detention center.

Proprietary funds provide the same type of information as the government-wide financial statements, only in more detail. The proprietary fund financial statements provide separate information for the utility funds, building department, solid waste, and detention center. The Detention Center, Pioche Public Utility Electric, and Solid Waste are considered to be major funds of the County.

Fiduciary Funds: Fiduciary funds are used to account for the resources held for the benefit of parties outside of the government; Fiduciary funds are not reported in the government wide financial statements because the resources of those funds are not available to support the County's own programs. The accounting used for fiduciary funds is much like that used for proprietary funds.

The County has one type of fiduciary fund, the Agency fund. The Agency Fund reports resources held by the County in a custodial capacity for individuals, private organizations, and other governments.

Notes to Financial Statements: The notes to the financial statements provide additional information that is essential to acquire a full understanding of the data provided in the government-wide and fund financial statements.

Other Information: In addition to the basic financial statements and accompanying notes, this report also presents certain required supplementary information concerning the County's progress in funding its obligation to provide other post-employment benefits to its employees; and schedules of budgetary comparisons for both the original and final budgets of the General Fund and the various other major County funds.

The combining statements and individual fund schedules referred to earlier in connection with the nonmajor governmental funds are presented immediately following the required supplementary information.

Government-Wide Financial Analysis

Net position of the County as of June 30, 2018, are summarized and analyzed below:

Net Position

	Governmental Activities		Business-type Activities		Total Primary Government	
	2018	**2017**	**2018**	**2017**	**2018**	**2017**
Assets:						
Current and other assets	$20,627,984	$20,946,142	$1,698,776	$1,278,206	$22,326,760	$22,224,348
Net capital assets	24,090,263	22,956,313	2,718,724	2,649,251	26,808,987	25,605,564
Total assets	44,718,247	43,902,455	4,417,500	3,927,457	49,135,747	47,829,912
Deferred outflows of resources:						
Deferred pension charge	1,195,795	1,888,816	519,015	840,040	1,714,810	2,728,856
Deferred OPEB	46,229	-	5,286	-	51,515	-
Total deferred outflows	1,242,024	1,888,816	524,301	840,040	1,766,325	2,728,856
Liabilities:						
Current liabilities	1,839,893	2,671,569	561,917	425,408	2,401,810	3,096,977
Long-term liabilities	8,350,554	8,281,291	4,377,584	4,498,968	12,728,138	12,780,259
Total liabilities	10,190,447	10,952,860	4,939,501	4,924,376	15,129,948	15,877,236
Deferred inflows of resources:						
Deferred pension charge	848,918	684,171	376,548	305,023	1,225,466	989,194
Net position:						
Invested in capital assets, net of related debt	23,984,900	22,734,316	2,507,612	2,416,245	26,492,512	25,150,561
Restricted	5,626,774	5,727,060	32,238	32,238	5,659,012	5,759,298
Unrestricted	5,309,232	5,692,864	(2,914,098)	(2,910,385)	2,395,134	2,782,479
Total net position	$34,920,906	$34,154,240	$ (374,248)	$ (461,902)	$34,546,658	$33,692,338

As noted earlier, net assets may serve over time as a useful indicator of the County's financial position. Assets exceeded liabilities by $34,546,658 as of June 30, 2018, and by $33,692,338 as of June 30, 2017, resulting in a net increase of $854,320, or 2.54%.

A portion of the County's net assets, 76.69%, reflects its investment in capital assets (e.g., land, buildings, machinery and equipment, etc.), net of any related debt outstanding used to acquire those assets. The County uses these capital assets to provide services to citizens; consequently, these assets are not available for future spending. Although the County's investment in its capital assets is reported net of related debt, it should be noted that the resources needed to repay this debt must be provided from other sources, since the capital assets themselves cannot be used to liquidate the debt.

The County's restricted net assets of 16.38% represents resources that are subject to external restrictions on how they may be used.

The remaining portion of the County's net assets, 6.93%, are unrestricted and may be used to meet the County's ongoing obligations to citizens and creditors.

At June 30, 2018, the County had positive balances in all three categories of net assets.

Changes in net position of the County are summarized as follows:

	Governmental Activities		Business-type Activities		Total	
	2018	2017	2018	2017	2018	2017
Revenues:						
Program revenues:						
Charges for services	$ 1,697,650	$ 1,681,616	$ 3,602,774	$ 2,254,281	$ 5,300,424	$ 3,935,897
Operating grants and contributions	1,394,184	1,581,750	-	-	1,394,184	1,581,750
Capital grants and contributions	1,628,024	205,610	-	-	1,628,024	205,610
General revenues:						
Ad valorem taxes	2,987,607	3,049,596	-	-	2,987,607	3,049,596
Consolidated taxes	1,419,664	1,403,554	-	-	1,419,664	1,403,554
Fuel taxes	1,832,748	1,807,454	-	-	1,832,748	1,807,454
Room taxes	77,201	62,018	-	-	77,201	62,018
Gaming taxes	134,621	140,389	-	-	134,621	140,389
Marijuana fees	88,235	-	-	-	88,235	-
Water sales	-	106,060	-	-	-	106,060
Tax penalties and costs	50,533	77,007	-	-	50,533	77,007
Federal in lieu taxes	1,804,715	874,508	-	-	1,804,715	874,508
Private car line	5,312	-	-	-	5,312	-
Fish and wildlife	3,294	4,046	-	-	3,294	4,046
Rent	154,654	173,857	-	-	154,654	173,857
National forest	21,230	406	-	-	21,230	406
Investment income (loss)	(7,811)	(31,630)	112	225	(7,699)	(31,405)
Other	68,664	64,881	134,375	144,280	203,039	209,161
Total revenues	13,360,525	11,201,122	3,737,261	2,398,786	17,097,786	13,599,908
Expenses:						
General government	3,641,595	3,757,165	-	-	3,641,595	3,757,165
Public safety	2,004,934	2,118,521	-	-	2,004,934	2,118,521
Judicial	1,304,024	1,292,084	-	-	1,304,024	1,292,084
Public works	2,201,132	1,808,478	-	-	2,201,132	1,808,478
Health	287,596	238,843	-	-	287,596	238,843
Welfare	591,351	686,188	-	-	591,351	686,188
Culture and recreation	787,963	730,123	-	-	787,963	730,123
Community support	273,300	360,824	-	-	273,300	360,824
Intergovernmental	103,382	597,610	-	-	103,382	597,610
Other	9,654	13,480	3,639,520	3,755,456	3,649,174	3,768,936
Loss on disposal of assets	53,183	1,084	-	-	53,183	1,084
Total expenses	11,258,114	11,604,400	3,639,520	3,755,456	14,897,634	15,359,856
Change in net position before transfer	2,102,411	(403,278)	97,741	(1,356,670)	2,200,152	(1,759,948)
Transfers	(236,971)	(642,333)	236,971	642,333	-	-
Change in net position	1,865,440	(1,045,611)	334,712	(714,337)	2,200,152	(1,759,948)
Net position - beginning	34,154,240	35,199,851	(461,902)	252,435	33,692,338	35,452,286
Prior period restatement	(1,098,774)	-	(247,058)	-	(1,345,832)	-
Beginning balance as restated	33,055,466	35,199,851	(708,960)	252,435	32,346,506	35,452,286
Net position - ending	$ 34,920,906	$ 34,154,240	$ (374,248)	$ (461,902)	$ 34,546,658	$ 33,692,338

Program revenues include charges for services, fines and forfeitures, certain licenses and permits, and both operating and capital grants and contributions. General revenues consist of taxes, rent, investment income, and miscellaneous.

For general revenues, the largest of these revenues, ad valorem taxes, decreased by $61,989, or 2.03%. The next largest revenue, fuel taxes, increased by $25,294, or 1.40%, due to increased economic activity in the local economy during the fiscal year 2018. The largest business-type activities revenue came from charges for services related to the utilities, detention center, solid waste, and building department. They increased by $1,348,493, or 59.82%, due primarily to an increase in inmate fees and solid waste activities.

Financial Analysis of the County's Governmental Funds

The County uses fund accounting to ensure and demonstrate compliance with finance-related legal requirements.

Governmental Funds

As of the end of the current fiscal year, the County's governmental funds reported a combined ending fund balance of $19,005,151, an increase of $350,906, or 1.88%, from the prior year. Fund balance components have been classified as nonspendable, restricted, committed, assigned and/or unassigned based primarily on the extent to which the County is bound to observe constraints imposed on the use of the resources of each fund. Restricted fund balance is $5,626,774, or 29.61% of total. Spending of these resources is constrained by externally imposed (statutory, bond covenant, or grantors) limitations on their use. The largest restricted fund balances include $862,881 for multi-species conservation, $1,073,968 for capital projects, and $1,381,270 for public works.

Committed and assigned fund balances combined to represent 69.22% of total fund balance with spending constrained by either the Board of County Commissioners (for committed) or senior management (for assigned). Committed balances in the special revenue funds are primarily due to revenues directed by the Commission to those funds to support programs. The largest committed fund balances include $3,379,373 for the Lincoln County Water District and $3,955,642 for land act.

Major Funds

General Fund (Budgetary Basis): The General Fund is the chief operating fund of the County. At the end of the current fiscal year, the fund balance (budgetary basis) of the General Fund was $773,139, an increase of $291,080, or 60.38%. The General Fund revenues increased by $9,856, or 0.22%. Taxes decreased by $52,313, or 2.39%. Charges for services decreased by $9,865, or 2.69%, due to decreased tax penalties and costs. Intergovernmental revenues increased by $51,023, or 3.30%, due to increases in consolidated tax and marijuana fees and a decrease in grant revenues.

Expenditures increased by $281,699, or 6.50%. General government expenditures increased by $65,974, or 4.43% due to an increase in county commissioner and executive officer costs. Public safety expenditures increased by $93,762, or 5.75%, due to an increase in capital outlay and benefits for the sheriff's office. Judicial expenditures increased by $112,359, or 9.60% due to an increase in district court services and supplies.

Road Fund: The fund balance for the fund increased by $232,036 to $636,840, or 57.32%. The Road fund expenditures decreased by $538,841, or 27.72%. This decrease was due to a decrease in capital outlay for equipment and road projects.

Federal in Lieu Tax Fund: The fund balance for the fund increased by $312,233 to $2,083,792, or 17.62%. The Federal in Lieu Tax Fund revenues increased by $985,305, or 112.11%. This increase was due to an increase of grant monies and recognizing unearned revenues. Expenditures increased by $261,854, or 40.29%, due to general government expenditures for IT and other expenses.

Lincoln County Water District Water Resources Fund: The Lincoln County Water District Water Resources Fund balance decreased by $108,297, or 3.81%, from the prior year. This was due to negative income and an operating transfer out.

Lincoln County Land Act Special Use Fund: The Lincoln County Land Act Special Use Fund balance increased by $31,584, or 0.85% from the prior year. This was due to receiving building rental income from tri-county weed and investment income with no expenditures.

County Grant Fund: The County Grant Fund revenues increased by $1,338,830, or 106.36%, and expenditures increased by $1,412,292, or 111.73%. These increases were due to receiving more grant monies in the current year.

Financial Analysis of the County's Enterprise Funds

Enterprise Funds provide the same type of information found in the government-wide financial statements, but in more detail. Unrestricted net position of the enterprise funds was a deficit of $2,914,098. Total net position for these funds increased by $334,712 from the prior year.

The **Detention Center Fund**, a major fund, had operating revenues increase by $940,773, or 100.66%, due to the new contract to provide inmate housing services. Expenses decreased by $70,794, or 3.43% due to a decrease in salaries and benefits.

The **Pioche Public Utility Electricity Fund**, a major fund, had operating revenues increase by $17,918, or 2.65%, during the year. Operating expenses decreased by $42,745, or 5.70%, due to a decrease in salaries and benefits and depreciation expenses.

The **Solid Waste Fund**, a major fund, had operating revenues increase by $409,459, or 114.84%, due to a full year of operations where the prior year was only a partial year. Operating expenses were $21,269, or 3.75%, lower than the prior year due to a decrease in service and supplies.

General Fund Budgetary Highlights

The original budget (2017-18 Final Budget) was approved May 22, 2017.

Original budget compared to final budget: During the year there was no need for any significant amendments to increase either the original estimated revenues or original budgeted appropriations. However, there was a need to make an amendment to reallocate appropriations among departments when it became clearer which departments would actually be charged for certain expenses. Generally, the movement of the appropriations between departments was not significant.

Final budget compared to actual results: The most significant differences for the General Fund were as follows:

Overall the revenues received were more than budgeted by 0.56% or $24,618. Revenues received in excess of budgeted amounts were 10.92% for intergovernmental and 9.49% for licenses and permits. The shortfall in revenue sources were 2.21% for taxes, 4.43% for charges for services, 18.43% for fines and forfeitures, and 5.76% for miscellaneous revenue.

A review of actual expenditures compared to the appropriations in the final budget shows expenditures were $505,453 less than budgeted or 9.87%. Expenditures were under budget for all functions of the General Fund - general government 8.86%, public safety 3.64%, judicial 4.82%, except for health which was 22.86% over budget.

Actual fund balance (budgetary basis) of $773,139, was $174,913 higher than anticipated to begin the 2018-2019 year.

ECONOMIC FACTORS AND NEXT YEAR'S BUDGET AND RATES

The County approved the budget for the 2018-2019 year on May 21, 2018. The following factors were considered in the development of the budget.

- Assessed valuation for the County decreased and tax rates remaining unchanged. Therefore, property tax revenues will be lower.
- Population has remained stable and is projected to increase.

Capital Assets and Debt Administration

Capital Assets

The County's investment in capital assets, net of accumulated depreciation, at June 30, 2018, was $24,090,263 in governmental activities and $2,718,724 in business-type activities. A summary of changes in capital assets for the year ended June 30, 2018, follows:

Governmental Activities:

	Balance June 30, 2017	Additions	Dispositions	Balance June 30, 2018
Capital assets not being depreciated:				
Construction in progress	$ -	$ 1,501,975	$ -	$ 1,501,975
Land	1,809,860	-	-	1,809,860
Total capital assets not being depreciated	1,809,860	1,501,975	-	3,311,835
Capital assets being depreciated:				
Building and improvements	21,769,683	-	-	21,769,683
Infrastructure	2,150,970	-	-	2,150,970
Equipment	9,305,163	974,032	(436,683)	9,842,512
Total capital assets being depreciated	33,225,816	974,032	(436,683)	33,763,165
Less accumulated depreciation for:				
Building and improvements	6,249,332	783,267	-	7,032,599
Infrastructure	287,782	43,019	-	330,801
Equipment	5,542,249	408,844	(329,756)	5,621,337
Total accumulated depreciation	12,079,363	1,235,130	(329,756)	12,984,737
Total capital assets being depreciated, net	21,146,453	(261,098)	(106,927)	20,778,428
Governmental activities assets, net	$ 22,956,313	$ 1,240,877	$ (106,927)	$ 24,090,263

Business-type Activities:

	Balance June 30, 2017	Additions	Dispositions	Balance June 30, 2018
Capital assets not being depreciated:				
Land	$ 214,000	$ -	$ -	$ 214,000
Capital assets being depreciated:				
Building and improvements	1,224,803	132,892	-	1,357,695
Utility system	1,410,352	-	-	1,410,352
Equipment	1,603,203	95,326	-	1,698,529
Total capital assets being depreciated	4,238,358	228,218	-	4,466,576
Less accumulated depreciation for:				
Building and improvements	342,463	40,949	-	383,412
Utility system	616,632	40,245	-	656,877
Equipment	844,012	77,551	-	921,563
Total accumulated depreciation	1,803,107	158,745	-	1,961,852
Total capital assets being depreciated, net	2,435,251	69,473	-	2,504,724
Business-type activities assets, net	$ 2,649,251	$ 69,473	$ -	$ 2,718,724

Capital Assets (Continued)

Major capital asset events during the current fiscal year included the following:

- Construction in progress for Airports and other improvements.
- Equipment for the road, sheriff, tri-county weed, and other culture and recreation equipment.

Debt Administration

Changes in Long-term Debt: During the year ended June 30, 2018, the following changes occurred in long-term debt:

Governmental activities:

	Balance June 30, 2017	Net Additions	Net Deletions	Balance June 30, 2018	Due within One Year
Compensated absences	$ 438,755	$ -	$ 625	$ 438,130	$ 174,315
Net pension liability	8,035,351	-	457,756	7,577,595	-
OPEB obligation payable (restated)	784,154	-	299,167	484,987	-
Note payable	122,497	-	47,699	74,798	50,641
Capital lease payable	98,206	-	68,240	29,966	29,966
Total	$ 9,478,963	$ -	$ 873,487	$ 8,605,476	$ 254,922

Business-type activities:

	Balance June 30, 2017	Net Additions	Net Deletions	Balance June 30, 2018	Due within One Year
Compensated absences	$ 228,818	$ 16,327	$ -	$ 245,145	$ 151,943
Net pension liability	3,807,095	-	203,923	3,603,172	-
OPEB obligation payable (restated)	96,434	-	3,645	92,789	-
Landfill closure and postclosure costs	20,000	20,000	-	40,000	-
Bond payable	233,006	-	21,894	211,112	22,691
Total	$ 4,385,353	$ 36,327	$ 229,462	$ 4,192,218	$ 174,634

The County's debt decreased by $873,487 for governmental activities during the current fiscal year. The reductions were from a decrease in estimated net pension liability, estimated OPEB obligation payable, and the payment of debt.

The County's debt decreased by $193,135 for business-type activities during the current fiscal year. The reason for the decrease was a reduction in estimated net pension liability and bond payments.

Per Nevada Revised Statutes Chapter 244A.059, the debt limitation for the County is equal to 10 percent of the assessed valuation of property, excluding motor vehicles, for the current year. The debt limitation currently applicable at June 30, 2018, was $28,658,088.

Additional information on the County's long-term debt can be found in (**Note D6**).

REQUESTS FOR INFORMATION

This financial report is designed to provide its users with a general overview of Lincoln County, Nevada's finances and to demonstrate the County's accountability for the revenues it receives. Any comments, further questions, or requests for additional information should be addressed to:

County Administration - Lincoln County, Nevada
PO Box 218
Pioche, Nevada 89043

LINCOLN COUNTY, NEVADA
STATEMENT OF NET POSITION
June 30, 2018

	Primary Government		
	Governmental Activities	Business-type Activities	Total
Assets:			
Cash and cash equivalents	$ 18,776,601	$ 1,077,907	$ 19,854,508
Interest receivable	48,982	533	49,515
Taxes receivable	53,337	-	53,337
Due from other governments	1,291,733	-	1,291,733
Due from others	29,331	-	29,331
Prepaid expense	48,000	-	48,000
Accounts receivable	-	548,093	548,093
Interfund receivable	380,000	-	380,000
Restricted assets- Cash	-	72,243	72,243
Capital assets net of accumulated depreciation	24,090,263	2,718,724	26,808,987
Total assets	44,718,247	4,417,500	49,135,747
Deferred outflows of resources:			
Deferred pension charge	1,195,795	519,015	1,714,810
Deferred OPEB	46,229	5,286	51,515
Total deferred outflows of resources	1,242,024	524,301	1,766,325
Liabilities:			
Accounts payable	1,021,619	109,379	1,130,998
Accrued payroll and benefits	341,796	158,663	500,459
Customer deposits	-	8,370	8,370
Due to other funds	(89,535)	89,535	-
Unearned revenue	310,492	-	310,492
Interest payable	599	1,336	1,935
Current portion of liabilities due within one year:			
Accrued compensated absences	174,315	151,943	326,258
Interfund payable	-	20,000	20,000
Notes payable	50,641	-	50,641
Lease payable	29,966	-	29,966
Current portion of liabilities payable from restricted assets:			
Bond payable	-	22,691	22,691
Long-term liabilities due or payable after one year:			
Accrued compensated absences	263,815	93,202	357,017
Landfill closure and postclosure costs	-	40,000	40,000
Interfund payable	-	360,000	360,000
Net pension liability	7,577,595	3,603,172	11,180,767
OPEB liability	484,987	92,789	577,776
Bond payable	-	188,421	188,421
Notes payable	24,157	-	24,157
Total liabilities	10,190,447	4,939,501	15,129,948
Deferred inflows of resources:			
Deferred pension charge	848,918	376,548	1,225,466
Net position:			
Invested in capital assets, net of debt	23,984,900	2,507,612	26,492,512
Restricted	5,626,774	32,238	5,659,012
Unrestricted	5,309,232	(2,914,098)	2,395,134
Total net position	$ 34,920,906	$ (374,248)	$ 34,546,658

The notes to the financial statements are an integral part of this statement.

LINCOLN COUNTY, NEVADA
STATEMENT OF ACTIVITIES
June 30, 2018

Functions/Programs	Expenses	Program Revenues: Charges for Services	Program Revenues: Operating Grants and Contributions	Program Revenues: Capital Grants and Contributions	Changes in Net Position: Governmental Activities	Changes in Net Position: Business-type Activities	Total
Primary governments:							
General government	$ (3,641,595)	$1,245,031	$ 453,545	$ 57,609	$ (1,885,410)	$ -	$ (1,885,410)
Public safety	(2,004,934)	217,925	248,901	122,245	(1,415,863)	-	(1,415,863)
Judicial	(1,304,024)	96,715	-	-	(1,207,309)	-	(1,207,309)
Public works	(2,201,132)	33,678	295,800	898,883	(972,771)	-	(972,771)
Health	(287,596)	80,807	-	-	(206,789)	-	(206,789)
Welfare	(591,351)	-	220,502	20,000	(350,849)	-	(350,849)
Culture and recreation	(787,963)	-	27,320	529,287	(231,356)	-	(231,356)
Community support	(273,300)	23,494	148,116	-	(101,690)	-	(101,690)
Intergovernmental	(103,382)	-	-	-	(103,382)	-	(103,382)
Interest on long-term debt	(9,654)	-	-	-	(9,654)	-	(9,654)
Total governmental activities	(11,204,931)	1,697,650	1,394,184	1,628,024	(6,485,073)	-	(6,485,073)
Business-type activities:							
Building Department	(77,868)	17,849	-	-	-	(60,019)	(60,019)
Detention Center	(1,992,722)	1,875,382	-	-	-	(117,340)	(117,340)
Landfill	(546,638)	766,005	-	-	-	219,367	219,367
Pioche Public Utility	(1,022,292)	943,538	-	-	-	(78,754)	(78,754)
Total business-type activities	(3,639,520)	3,602,774	-	-	-	(36,746)	(36,746)
Total primary governments	$(14,844,451)	$5,300,424	$ 1,394,184	$ 1,628,024	(6,485,073)	(36,746)	(6,521,819)
	General Revenues:						
	Property taxes				2,987,607	-	2,987,607
	Consolidated taxes				1,419,664	-	1,419,664
	Fuel tax				1,832,748	-	1,832,748
	Room tax				77,201	-	77,201
	Gaming tax				134,621	-	134,621
	Marijuana fees				88,235	-	88,235
	Tax penalties and costs				50,533	-	50,533
	Federal in-lieu tax				1,804,715	-	1,804,715
	Private car line				5,312	-	5,312
	Fish and wildlife				3,294	-	3,294
	Rent				154,654	-	154,654
	National forest				21,230	-	21,230
	Loss on disposal of assets				(53,183)	-	(53,183)
	Investment income (loss)				(7,811)	112	(7,699)
	Miscellaneous				68,664	-	68,664
	Capital fees				-	113,758	113,758
	Custom fees				-	20,617	20,617
	Operating transfers				(236,971)	236,971	-
	Total general revenues and transfers				8,350,513	371,458	8,721,971
	Change in net position				1,865,440	334,712	2,200,152
	Net position - beginning as restated				33,055,466	(708,960)	32,346,506
	Net position - end of year				$ 34,920,906	$ (374,248)	$ 34,546,658

The notes to the financial statements are an integral part of this statement

LINCOLN COUNTY, NEVADA
BALANCE SHEET
GOVERNMENTAL FUNDS
June 30, 2018

	Major Funds				
	General Fund	Road Fund	Federal in Lieu Tax Fund	Lincoln County Water District Water Resources	Lincoln County Land Act Special Use
ASSETS					
Pooled cash and investments	$ 1,212,183	$ 493,759	$ 2,182,955	$ 2,724,053	$ 3,562,405
Interest receivable	4,053	821	8,816	9,362	6,319
Taxes receivable	32,550	-	-	-	-
Due from other governments	397,413	296,386	57,609	-	-
Due from others	27,652	-	-	-	-
Prepaid expense	-	-	-	-	-
Interfund receivable	-	-	-	-	190,000
Due from other funds	89,535	-	-	-	-
Total assets	$ 1,763,386	$ 790,966	$ 2,249,380	$ 2,733,415	$ 3,758,724
LIABILITIES					
Accounts payable	$ 214,005	$ 109,070	$ 165,588	$ -	$ -
Accrued payroll and benefits	213,130	45,056	-	-	-
Unearned revenues	-	-	-	-	-
Total liabilities	427,135	154,126	165,588	-	-
DEFERRED INFLOWS OF RESOURCES					
Unavailable revenue - property taxes	26,703	-	-	-	-
FUND BALANCE					
Nonspendable	-	-	-	-	-
Restricted for:					
Capital projects	-	-	-	-	-
Unincorporated towns	-	-	-	-	-
Multi-species conservation	-	-	-	-	-
Stabilization	130,904	-	-	-	-
Rachel Jones Cemetery	827	-	-	-	-
General government	208,567	-	-	-	-
Public safety	-	-	-	-	-
Judicial	-	-	-	-	-
Public works	-	636,840	-	-	-
Health	-	-	-	-	-
Welfare	-	-	-	-	-
Culture and recreation	-	-	-	-	-
Community support	-	-	-	-	-
Intergovernmental	-	-	-	-	-
Committed for:					
Land act	64,723	-	-	-	3,758,724
Water	63,442	-	-	-	-
Lincoln County Water District	-	-	-	2,733,415	-
General government	-	-	2,083,792	-	-
Public works	-	-	-	-	-
Health	-	-	-	-	-
Planning	27,121	-	-	-	-
Flood control	40,825	-	-	-	-
Assigned for:					
Subsequent year	598,226	-	-	-	-
Unassigned:	174,913	-	-	-	-
Total fund balance	1,309,548	636,840	2,083,792	2,733,415	3,758,724
Total liabilities, deferred inflows of resources, and fund balance	$ 1,763,386	$ 790,966	$ 2,249,380	$ 2,733,415	$ 3,758,724

The notes to the financial statements are an integral part of this statement.

County Grant	Other Governmental Funds	Totals
$ 102,369	$ 8,498,877	$ 18,776,601
561	19,050	48,982
-	20,787	53,337
479,664	60,661	1,291,733
-	1,679	29,331
-	48,000	48,000
-	190,000	380,000
-	-	89,535
$ 582,594	$ 8,839,054	$ 20,717,519
$ 338,719	$ 194,237	$ 1,021,619
14,813	68,797	341,796
165,920	144,572	310,492
519,452	407,606	1,673,907
-	11,758	38,461
-	48,000	48,000
-	1,073,968	1,073,968
-	218,847	218,847
-	862,881	862,881
-	-	130,904
-	-	827
-	252,808	461,375
-	66,280	66,280
-	231,092	231,092
-	744,430	1,381,270
-	253	253
-	763,905	763,905
-	208,268	208,268
-	225,800	225,800
-	1,104	1,104
-	132,195	3,955,642
-	2,834,671	2,898,113
-	645,958	3,379,373
63,142	100,046	2,246,980
-	-	-
-	9,453	9,453
-	-	27,121
-	-	40,825
-	-	598,226
-	(269)	174,644
63,142	8,419,690	19,005,151
$ 582,594	$ 8,839,054	$ 20,717,519

LINCOLN COUNTY, NEVADA
RECONCILIATION OF THE GOVERNMENTAL FUNDS BALANCE SHEET
TO THE STATEMENT OF NET POSITION
June 30, 2018

Total fund balance - governmental funds	**$**	**19,005,151**
Amounts reported for governmental activities in the Statement of Net Position are different because:		
Capital assets, net of the related depreciation, are not reported in the Governmental Funds financial statements because they are not current financial resources, but they are reported in the Statement of Net Position.		24,090,263
Other long-term assets which are not available to pay for current period expenditures and, therefore, are deferred in the funds.		38,461
Certain liabilities (such as bonds payable and capital leases payable) are not reported in the Governmental Funds financial statements because they are not due and payable, but they are presented as liabilities in the Statement of Net Position.		(543,493)
The County's other post-employment benefits liabilities as well as other post-employment benefits-related deferred outflows and deferred inflows of resources are recognized in the government-wide statements and include:		
Deferred outflows from other post-employment benefits.		46,229
Total other post-employment benefits liability.		(484,987)
The County's proportionate share of net pension assets and liabilities as well as pension-related deferred outflows and deferred inflows of resources are recognized in the government-wide statements and include:		
Deferred outflows from pension activity		1,195,795
Net pension liability		(7,577,595)
Deferred inflows from pension activity		(848,918)
Total net position - governmental activities	**$**	**34,920,906**

The notes to the financial statements are an integral part of this statement.

LINCOLN COUNTY, NEVADA
STATEMENT OF REVENUES, EXPENDITURES,
AND CHANGES IN FUND BALANCES
GOVERNMENTAL FUNDS
Year Ended June 30, 2018

	Major Funds			
	General Fund	Road Fund	Federal in Lieu Tax Fund	Lincoln County Water District Water Resources
Revenues:				
Taxes	$ 2,132,619	$ -	$ -	$ -
Licenses and permits	19,872	-	-	-
Intergovernmental	1,598,724	1,736,957	1,862,324	-
Charges for services	367,863	-	-	-
Fines and forfeitures	293,668	-	-	-
Miscellaneous	83,434	170	1,826	(8,297)
Total revenues	4,496,180	1,737,127	1,864,150	(8,297)
Expenditures:				
Current:				
General government	1,597,953	-	726,645	-
Public safety	1,723,882	-	45,046	-
Judicial	1,282,536	-	-	-
Public works	82,146	1,405,091	-	-
Health	52,388	-	-	-
Welfare	-	-	-	-
Culture and recreation	-	-	-	-
Community support	-	-	16,957	-
Intergovernmental	-	-	70,484	-
Capital projects	-	-	-	-
Debt service:				
Principal	-	-	47,699	-
Interest	-	-	4,877	-
Total expenditures	4,738,905	1,405,091	911,708	-
Excess (deficiency) of revenues over expenditures	(242,725)	332,036	952,442	(8,297)
Other financing sources (uses):				
Operating transfers in	340,000	-	-	-
Operating transfers out	(66,000)	(100,000)	(640,209)	(100,000)
Sale of capital assets	-	-	-	-
Total other financing sources (uses)	274,000	(100,000)	(640,209)	(100,000)
Net change in fund balance	31,275	232,036	312,233	(108,297)
Fund balance:				
Beginning of year	1,278,273	404,804	1,771,559	2,841,712
End of year	$ 1,309,548	$ 636,840	$ 2,083,792	$ 2,733,415

The notes to the financial statements are an integral part of this statement.

Lincoln County Land Act Special Use	County Grant	**Other Governmental Funds**	Totals
$ -	$ -	$ 928,868	$ 3,061,487
-	-	3,028	22,900
-	2,597,521	553,131	8,348,657
-	-	982,901	1,350,764
-	-	59,254	352,922
31,584	116	111,641	220,474
31,584	2,597,637	2,638,823	13,357,204
-	418,792	1,135,594	3,878,984
-	327,447	16,344	2,112,719
-	-	171,395	1,453,931
-	1,268,488	118,437	2,874,162
-	-	195,366	247,754
-	100,949	507,436	608,385
-	560,607	348,408	909,015
-	-	243,265	260,222
-	-	32,898	103,382
-	-	248,229	248,229
-	-	68,240	115,939
-	-	5,472	10,349
-	2,676,283	3,091,084	12,823,071
31,584	(78,646)	(452,261)	534,133
-	78,762	489,014	907,776
-	-	(238,538)	(1,144,747)
-	-	53,744	53,744
-	78,762	304,220	(183,227)
31,584	116	(148,041)	350,906
3,727,140	63,026	8,567,731	18,654,245
$ 3,758,724	$ 63,142	$ 8,419,690	$ 19,005,151

LINCOLN COUNTY, NEVADA
RECONCILIATION OF THE STATEMENT OF REVENUES, EXPENDITURES AND CHANGES IN FUND BALANCES OF GOVERNMENTAL FUNDS TO THE STATEMENT OF ACTIVITIES
Year Ended June 30, 2018

Net Change in Fund Balance - Governmental Funds	**$**	**350,906**
Amounts reported for governmental activities in the Statement of Activities are different because:		
Capital outlays to purchase or build capital assets are reported in Governmental Funds financial statements as expenditures. However, for governmental activities those costs are shown in the Statement of Net Position and allocated over the estimated useful lives as annual depreciation expenses in the Statement of Activities.		1,133,950
Property taxes that are collected in the time to pay obligations of the current period are reported as revenue in the fund statements. However, amounts that related to prior periods that first become available in the current period should not be reported as revenue in the statement of activities.		3,321
The issuance of long-term debt (e.g., bonds, leases) provides current financial resources to governmental funds, while the repayment of the principal of long-term debt consumes the current financial resources of governmental funds. Neither transaction, however, has any effect on net position. Also, governmental funds report the effect of issuance costs, premiums, discounts, and other similar items when debt is first issued, whereas these amounts are deferred and amortized in the Statement of Activities. This amount is the net effect of these differences in the treatment of long-term debt and related items.		115,939
Generally, expenditures recognized in the fund financial statements are limited to only those that use current financial resources, but expenses are recognized in the statement of activities when incurred.		1,320
Net differences between other post-employment benefits contributions recognized in the fund statement of revenues, expenditures, and changes in fund balances and the Statement of Activities:		
Other post-employment benefits contributions made after measurement date (2018 contributions).		46,229
Net other post-employment benefits expense.		249,809
Net differences between pension system contributions recognized in the fund statement of revenues, expenditures, and changes in fund balances and the statement of activities:		
Pension contributions made after measurment date (2018 contributions).		456,528
Net pension expense.		(492,562)
Change in net position of governmental activities	**$**	**1,865,440**

The notes to the financial statements are an integral part of this statement.

LINCOLN COUNTY, NEVADA
STATEMENT OF NET POSITION
PROPRIETARY FUNDS
June 30, 2018

	Major Fund		
	Detention Center	Pioche Public Utility Electric	Solid Waste
ASSETS			
Current assets:			
Pooled cash and investments	$ -	$ 295,950	$ 446,861
Accounts receivable	318,676	49,744	144,690
Interest receivable	-	165	72
Total current assets	318,676	345,859	591,623
Restricted assets:			
Cash	-	-	40,005
Capital assets:			
Land	-	2,000	200,000
Property, plant and equipment (net of depreciation)	876,813	174,285	405,108
Total capital assets	876,813	176,285	605,108
Total assets	1,195,489	522,144	1,236,736
DEFERRED OUTFLOWS OF RESOURCES			
Deferred pension charge	427,920	21,064	31,966
Deferred OPEB	-	1,762	-
Total deferred outflows of resources	427,920	22,826	31,966
LIABILITIES			
Current liabilities:			
Accounts payable	25,541	43,708	17,397
Accrued payroll and benefits	123,811	5,490	15,410
Due to other funds	89,535		-
Customer deposits	-	6,610	-
Accrued compensated absences	120,471	7,014	11,432
Interfund payable	-	-	20,000
Accrued interest payable	-	-	-
Total current liabilities	359,358	62,822	64,239
Current liabilities payable from restricted assets:			
Revenue bond	-	-	-
Non-current liabilities:			
Accrued compensated absences	72,283	4,347	7,621
Landfill closure and postclosure costs	-	-	40,000
Interfund payable	-	-	360,000
Net pension liability	3,236,339	131,611	472
OPEB liability	-	30,930	-
Revenue bond	-	-	-
Total non-current liabilities	3,308,622	166,888	408,093
Total liabilities	3,667,980	229,710	472,332
DEFERRED INFLOWS OF RESOURCES			
Deferred pension charge	315,194	15,302	18,877
NET POSITION			
Invested in capital assets, net of related debt	876,813	176,285	605,108
Restricted for revenue bond debt service	-	-	-
Unrestricted	(3,236,578)	123,673	172,385
Total net position	$ (2,359,765)	$ 299,958	$ 777,493

The notes to the financial statements are an integral part of this statement.

Nonmajor Enterprise Funds	Total Enterprise Funds
$ 335,096	$ 1,077,907
34,983	548,093
296	533
370,375	1,626,533
32,238	72,243
12,000	214,000
1,048,518	2,504,724
1,060,518	2,718,724
1,463,131	4,417,500
38,065	519,015
3,524	5,286
41,589	524,301
22,733	109,379
13,952	158,663
-	89,535
1,760	8,370
13,026	151,943
-	20,000
1,336	1,336
52,807	539,226
22,691	22,691
8,951	93,202
-	40,000
-	360,000
234,750	3,603,172
61,859	92,789
188,421	188,421
493,981	4,377,584
569,479	4,939,501
27,175	376,548
849,406	2,507,612
32,238	32,238
26,422	(2,914,098)
$ 908,066	$ (374,248)

LINCOLN COUNTY, NEVADA
STATEMENT OF REVENUES, EXPENSES, AND
CHANGES IN NET POSITION
PROPRIETARY FUNDS
For the Year Ended June 30, 2018

	Major Fund		
	Detention Center	Pioche Public Utility Electric	Solid Waste
Operating revenues:			
Charges for services	$ 1,875,382	$ 693,380	$ 766,005
Operating expenses:			
Salaries and wages	1,002,794	65,173	240,459
Employee benefits	600,602	32,421	83,871
Services and supplies	345,908	587,871	120,382
Closure and postclosure landfill costs	-	-	20,000
Bad debt expense	-	-	40,000
Depreciation	43,418	21,848	41,926
Total operating expenses	1,992,722	707,313	546,638
Operating income (loss)	(117,340)	(13,933)	219,367
Non-operating revenues (expenses):			
Investment income	-	34	15
Operating transfers in	21,820	-	175,151
Capital fees	-	57,123	-
Custom fees	-	14,478	-
Interest expense	-	-	-
Total non-operating revenues (expenses)	21,820	71,635	175,166
Changes in net position	(95,520)	57,702	394,533
Net position:			
Beginning of year	(2,129,922)	277,702	391,035
Restatement per GASB 75	(134,323)	(35,446)	(8,075)
Beginning balance as restated	(2,264,245)	242,256	382,960
End of year	$ (2,359,765)	$ 299,958	$ 777,493

The notes to the financial statements are an integral part of this statement.

Nonmajor Enterprise Funds	Total Enterprise Funds
$ 268,007	$ 3,602,774
119,377	1,427,803
70,800	787,694
141,417	1,195,578
-	20,000
-	40,000
51,553	158,745
383,147	3,629,820
(115,140)	(27,046)
63	112
40,000	236,971
56,635	113,758
6,139	20,617
(9,700)	(9,700)
93,137	361,758
(22,003)	334,712
999,283	(461,902)
(69,214)	(247,058)
930,069	(708,960)
$ 908,066	$ (374,248)

LINCOLN COUNTY, NEVADA
STATEMENT OF CASH FLOWS
PROPRIETARY FUNDS
For the Year Ended June 30, 2018

	Major Fund		
	Detention Center	Pioche Public Utility Electric	Solid Waste
Cash flows from operating activities:			
Cash received from customers	$ 1,742,295	$ 706,676	$ 581,599
Cash paid for services and supplies	(369,410)	(594,519)	(117,587)
Cash paid for salaries and benefits	(1,522,554)	(95,966)	(308,808)
Net cash provided (used) by operating activities	(149,669)	16,191	155,204
Cash flows from noncapital financing activities:			
Due to other funds	89,535	-	-
Operating transfers in/out	21,820	-	175,151
Net cash provided (used) by noncapital financing activities	111,355	-	175,151
Cash flows from capital and related financing activities:			
Purchases of capital assets	(21,820)	-	(206,398)
Capital fees	-	57,123	-
Custom fees	-	14,478	-
Debt retirement	-	-	(20,000)
Interest paid	-	-	-
Net cash provided (used) by capital and related financing activities	(21,820)	71,601	(226,398)
Cash flows from investing activities:			
Investment income	-	(24)	(10)
Net change in cash and cash equivalents	(60,134)	87,768	103,947
Cash:			
Beginning of year	60,134	208,182	382,919
End of year	$ -	$ 295,950	$ 486,866
Reconciliation of operating income (loss) to net cash provided (used) by operating activities:			
Operating income (loss)	$ (117,340)	$ (13,933)	$ 219,367
Adjustments to reconcile operating income (loss) to net cash provided (used) by operating activities:			
Depreciation expense	43,418	21,848	41,926
Bad Debts	-	-	40,000
(Increase) decrease in accounts receivable	(133,087)	11,016	(184,406)
Increase (decrease) in accounts payable	(23,502)	(6,648)	2,795
Increase (decrease) in accrued payroll and benefits	54,357	443	1,044
Increase (decrease) in compensated absences	(2,959)	(520)	19,053
Increase (decrease) in land fill costs	-	-	20,000
Increase (decrease) in net pension liability	(173,593)	(6,996)	(10,264)
Increase (decrease) in net pension expense	203,037	8,136	5,689
Increase (decrease) in OPEB liability	-	30,930	-
Increase (decrease) in OPEB pension expense	-	(30,365)	-
Increase (decrease) in customer deposits	-	2,280	-
Total adjustments	(32,329)	30,124	(64,163)
Net cash provided (used) by operating activities	$ (149,669)	$ 16,191	$ 155,204

The notes to the financial statements are an integral part of this statement.

Nonmajor Enterprise Funds	Total Enterprise Funds
$ 267,105	$ 3,297,675
(133,301)	(1,214,817)
(183,708)	(2,111,036)
(49,904)	(28,178)
-	89,535
40,000	236,971
40,000	326,506
-	(228,218)
56,635	113,758
6,139	20,617
(21,894)	(41,894)
(10,022)	(10,022)
30,858	(145,759)
214	180
21,168	152,749
346,166	997,401
$ 367,334	$ 1,150,150
$ (115,140)	$ (27,046)
51,553	158,745
-	40,000
(1,412)	(307,889)
8,116	(19,239)
3,218	59,062
753	16,327
-	20,000
(13,070)	(203,923)
14,439	231,301
61,859	92,789
(60,730)	(91,095)
510	2,790
65,236	(1,132)
$ (49,904)	$ (28,178)

LINCOLN COUNTY, NEVADA
FIDUCIARY FUNDS
STATEMENT OF NET POSITION
June 30, 2018

	Investment Trust Fund	Agency
ASSETS		
Pooled cash and investments	$ 3,691,584	$ 696,316
Interest receivable	-	10,894
Taxes receivable	-	56,719
Due from other governments	-	31,548
Total assets	$ 3,691,584	$ 795,477
LIABILITIES		
Amount held for others	$ -	$ 749,282
Unavailable revenue - taxes	-	46,195
Total liabilities	-	795,477
NET POSITION		
Held in trust for pool participants	$ 3,691,584	$ -

The notes to the financial statements are an integral part of this statement.

LINCOLN COUNTY, NEVADA
FIDUCIARY FUNDS
STATEMENT OF CHANGES IN FIDUCIARY NET POSITION
June 30, 2018

	Investment Trust Fund
Additions:	
Investment earnings	$ 26,291
Net change in fair value of investments	(25,869)
Capital share transactions	-
Change in net position	422
Net position:	
Beginning of year	3,691,162
End of year	$ 3,691,584

The notes to the financial statements are an integral part of this statement.

NOTE A. SUMMARY OF SIGNIFICANT ACCOUNTING POLICIES

The County financial statements are prepared in accordance with generally accepted accounting principles (GAAP). The Governmental Accounting Standards Board (GASB) is responsible for establishing GAAP for state and local governments through its pronouncements (Statements and Interpretations).

1. Reporting Entity

Lincoln County, Nevada, is governed by an elected five member board. As required by generally accepted accounting principles, these financial statements present Lincoln County, Nevada (the primary government), and its component units. Blended component units, although legally separate entities are, in substance, part of the County's operations. Thus, blended component units are appropriately presented as funds' of the primary government.

2. Blended Component Units

Component units are legally separate organizations for which the County is financially accountable. Lincoln County Water District, Alamo Town, Panaca Town, and Pioche Town are all component units that are part of the County's reporting entity because the County is financially accountable for these entities. Financial accountability is determined primarily by the fact that as the governing body, the County's Board of Commissioners can impose its will on significant aspects of the operations of these entities. These entities are presented as blended component units since the operations of these entities are considered part of County operations.

3. Description of Government-Wide Financial Statements

The government-wide financial statements (i.e., the statement of net position and the statement of activities) report information on all of the nonfiduciary activities of the County and its component units. All fiduciary activities are reported only in the fund financial statements. *Governmental activities,* which normally are supported by taxes, intergovernmental revenues, and other nonexchange transactions, are reported separately from *business-type activities*, which rely to a significant extent on fees and charges to external customers for support.

4. Basis of Presentation - Government-wide Financial Statements

While separate government-wide and fund financial statements are presented, they are interrelated. The governmental activities column incorporates data from governmental funds, while business-type activities incorporate data from the County's enterprise funds. Separate financial statements are provided for governmental funds, proprietary funds (enterprise funds), and fiduciary funds, even though the fiduciary funds are excluded from the government-wide financial statements. As a general rule, the effect of interfund activity has been eliminated from the government-wide financial statements.

The Statement of Net Position presents the consolidated financial position of the County at year-end, in separate columns, for both governmental and business-type activities.

The Statement of Activities demonstrates the degree to which the direct expenses of a given function or programs are offset by program revenues. Direct expenses are those that are specifically associated with a program or service and are, therefore, clearly identifiable to a particular function. Amounts reported as program revenues include 1) charges to customers or applicants who purchase, use, or directly benefit from goods, services, or privileges provided by a given function or segment and 2) grants and contributions (including special assessments) that are restricted to meeting the operational or capital requirements of a particular function or segment. Taxes and other revenues properly not included among program revenues are reported instead as general revenues. This statement provides a net cost or net revenue of specific programs and functions within the County. Those functions with a net cost are generally dependent on general-purpose tax revenues, such as property tax, to remain operational.

NOTE A. SUMMARY OF SIGNIFICANT ACCOUNTING POLICIES (Continued)

5. Basis of Presentation - Fund Financial Statements

The fund financial statements provide information about the County's funds, including its fiduciary funds and blended component units. Separate statements for each fund category – governmental, proprietary (enterprise), and fiduciary – are presented. The emphasis of fund financial statements is on major governmental and enterprise funds, each displayed in a separate column. All remaining governmental and enterprise funds are aggregated and reported as nonmajor funds. Major individual governmental and enterprise funds are reported as separate columns in the fund financial statements.

The County reports the following major governmental funds:

General Fund - The General Fund is the County's primary operating fund. It accounts for all financial resources of the general County, except those accounted for in another fund.

Road Fund - The Road Fund is used to account for gas tax revenues allocated for the construction, repair and maintenance of County roads.

Federal in Lieu Tax Fund - The Federal in Lieu Tax Fund is used to account for taxes received in lieu of property taxes for property owned in the County by the Federal Government.

Lincoln County Water District Water Resources Fund - The Lincoln County Water District Water Resources Fund is used to account for general activities of the District, a blended component unit of the government.

Lincoln County Land Act Special Use Fund - The Lincoln County Land Act Special Use Fund is used to account for land sale monies to be spent per ordinances.

County Grant Fund - The County Grant Fund is used to account for monies received to be spent on a specified purpose.

The County reports the following major enterprise fund:

Detention Center Fund - The Detention Center fund is used to account for the activities of the Lincoln County Detention Center, providing detention services for local governments within Nevada.

Pioche Public Utility Electric Fund - The Pioche Public Utility Electric fund is used to account for the charges for providing electric service in Pioche, Nevada.

Solid Waste – The Solid Waste fund is used to account for solid waste disposal throughout the County and land fill operations.

Additionally, the County reports the following fiduciary fund:

Investment Trust – The investment trust fund is an external investment pool operated by the Lincoln County Treasurer. Participants include Caliente City, Lincoln County School District, Range, Panaca Fire Protection District, Pahranagat Fire District, Coyote Springs GID, Pioche Fire District, Southeastern Lincoln County Habitat Conservation Plan GID, and the Lincoln County Fire District.

Agency Funds – The Agency Fund is used to account for assets held by the County in an agency capacity for others and cannot be used to support the government's own programs.

During the course of operations, the County has activity between funds for various purposes. Any residual balances outstanding at year end are reported as due from/to other funds and advances to/from other funds. While these balances are reported in fund financial statements, certain eliminations are made in the preparation of the government-wide financial statements. Balances between the funds included in the governmental activities are eliminated so that only the net amount is included as internal balances in the governmental activities column. Similarly, balances between the funds included in business-type activities (i.e. enterprise funds) are eliminated so that only the net amount is included as internal balances in the business-type activities column.

NOTE A. SUMMARY OF SIGNIFICANT ACCOUNTING POLICIES (Continued)

5. Basis of Presentation - Fund Financial Statements (Continued)

Further, certain activity occurs during the year involving transfers of resources between funds. In fund financial statements these amounts are reported as transfers in/out. While reported in fund financial statements, certain eliminations are made in the preparation of government-wide financial statements. Transfers between the funds included in governmental activities are eliminated so that only the net amount is included as transfers in the governmental activities column. Similarly, balances between the funds included in business-type activities are eliminated so that only the net amount is included as transfers in the business-type activities column.

6. Measurement Focus and Basis of Accounting

The accounting and financial reporting treatment is determined by the applicable measurement focus and basis of accounting. Measurement focus indicates the type of resources being measured such as current financial resources or economic resources. The basis of accounting indicates the timing of events for recognition in the financial statements.

The government-wide financial statements are reported using the economic resources measurement focus and the accrual basis of accounting, as are the proprietary fund and fiduciary fund financial statements. Revenues are recorded when earned and expenses are recorded when a liability is incurred, regardless of the timing of related cash flows. Property taxes are recognized as revenues in the year for which they are levied. Grants and similar items are recognized as revenue as soon as all eligibility requirements imposed by the provider have been met.

The governmental fund financial statements are reported using the current financial resources measurement focus and the modified accrual basis of accounting. Revenues are recognized as soon as they are both measurable and available. Gross receipts and sales taxes are considered "measurable" when in the hands of intermediary collecting governments and are then recognized as revenue. The government considers revenues to be "available" if they are collected within 60 days of the end of the current fiscal period. Anticipated refunds of taxes are recorded as liabilities and reductions of revenue when they are measurable and the payment seems certain. In general, expenditures are recorded when liabilities are incurred. The exception to this rule is that principal and interest on debt service, as well as liabilities related to compensated absences and claims and judgments, are recorded when payment is due. General capital asset acquisitions are reported as expenditures in governmental funds. Issuance of long-term debt and acquisitions under capital leases are reported as other financing sources.

The major revenue sources of the County include consolidated taxes (including sales tax), fuel taxes, intergovernmental revenue, and property taxes. Property taxes, sales taxes, licenses, and interest associated with the current fiscal period are all considered to be susceptible to accrual and so have been recognized as revenues of the current fiscal period. Expenditure-driven grants are recognized as revenue when the qualifying expenditures have been incurred and all other eligibility requirements have been met, and the amount is received during the period or within the availability period for this revenue source (within 60 days of year-end). All other revenue items are considered to be measurable and available only when cash is received by the County.

The proprietary funds are reported using the economic resources measurement focus and the accrual basis of accounting. The agency fund has no measurement focus but utilizes the accrual basis of accounting for reporting its assets and liabilities. Proprietary funds distinguish operating revenues and expenses from non-operating items. Operating revenues and expenses generally result from providing services and producing and delivering goods in connection with a proprietary fund's principal ongoing operations. The principal operating revenues of the Pioche Public Utility funds are customer charges. Operating revenues for the Building fund come from charges for services for building inspections and permits. The Detention Center receives revenue for housing prisoners of other governments. Expenses are those required to provide the service. The Solid Waste fund is used to account for solid waste disposal throughout the County and landfill operations. All revenues and expenses not meeting this definition are reported as non-operating revenues and expenses.

NOTE A. SUMMARY OF SIGNIFICANT ACCOUNTING POLICIES (Continued)

7. Budgetary Basis of Accounting

Annual budgets are adopted on a basis consistent with generally accepted accounting principles for governmental funds.

a. The statutes provide for the following timetable in adoption of budgets:

(i) Before April 15, the County submits to the Nevada State Department of Taxation a tentative budget for the upcoming fiscal year. The tentative budget includes proposed expenditures and the means to finance them.

(ii) A public hearing must be held by the County Commissioners no sooner than the third Monday in May and no later than the last day in May. Notice of the public hearing must be published once in the local newspaper not more than 14 nor less than 7 days before the hearing.

(iii) On or before June 1, the County Commissioners must adopt a final budget.

b. NRS 354.598005 (1) - provides that the County Commissioners may augment the budget at any time by a majority vote of the Commissioners providing the Commission publish notice of its intention to act in a newspaper of general circulation in the County at least three days before the date set for adoption of the resolution.

c. Nevada Revised Statute 354.598005 (5) allows appropriations to be transferred between functions, funds or contingency accounts if such a transfer does not increase the total appropriation for any fiscal year and is not in conflict with other statutory provisions. The County Auditor may transfer appropriations within any function. The County Auditor may also transfer appropriations between functions or programs within a fund, if the County Commissioners are advised of the action at the next regular meeting; and the action is recorded in the official minutes of the meeting. The County Commissioners may authorize the transfer of appropriations between funds or from the contingency account if the County Commissioners announce the transfer of appropriations at a regularly scheduled meeting and sets forth the exact amounts to be transferred and the accounts, functions, programs and funds affected. The County Commissioners must also set forth its reasons for the transfer; and the action must be recorded in the official minutes of the meeting.

d. Statutory regulations require budget control to be exercised at the function level within the funds.

e. The following funds were augmented during the year: Senior Nutrition, County Grants, and Federal in Lieu Tax Funds had automatic budget augmentations for grant revenue. General Fund, China Springs, Nuclear Waste, and Vehicle Capital Projects were augmented during the year.

f. Generally, budgets for all funds are adopted in accordance with generally accepted accounting principles. Budgeted amounts reflected in the accompanying financial statements recognize amendments made during the year.

g. All appropriations lapse at the end of the fiscal year.

8. Assets, Liabilities, Deferred Outflows/Inflows of Resources, and Net Position/Fund Balance

a. Cash and Cash Equivalents

The County's cash and cash equivalents are considered to be cash on hand, demand deposits, and short term investments with original maturities of three months or less from the date of acquisition.

Cash includes cash deposited in interest-bearing accounts at banks and cash in the custody of fiscal agents of the County.

NOTE A. SUMMARY OF SIGNIFICANT ACCOUNTING POLICIES (Continued)

8. Assets, Liabilities, Deferred Outflows/Inflows of Resources, and Net Position/Fund Balance (Continued)

b. Investments

Investments are stated at fair value on the Balance Sheet. Fair value is the amount at which a financial instrument could be exchanged in a current transaction between willing parties other than in a forced or liquidation sale. Changes in the fair value of County investments are part of investment income which is included in revenue from local sources on the Statement of Activities and the Statement of Revenues, Expenditures, and Changes in Fund Balances of governmental funds. (**See Note D1**)

Nevada Revised Statutes authorize the County to invest in:

1. Obligations of the U.S. Treasury and U.S. Agencies in which the maturity dates do not exceed more than 10 years from the date of purchase.

2. Negotiable certificates of deposit issued by commercial banks or insured savings and loan associations (those over $250,000 must be fully collateralized).

3. Negotiable notes or short-term negotiable bonds issued by local governments within Nevada.

4. Eligible bankers' acceptances that do not exceed 270 days maturity and do not exceed 20 percent of the portfolio.

5. Commercial paper with a rating of A-1 or P-1 that does not exceed 240 days maturity and does not exceed 20 percent of the portfolio.

6. The State of Nevada's Local Government Investment Pool.

7. Repurchase agreements that are collateralized at 102 percent of the repurchase price and do not exceed 90 days maturity. Securities used for collateral must meet the criteria listed above.

8. Money market mutual funds which are rated as "AAA" or its equivalent and invest only in securities issued by the Federal Government, U.S. Agencies, or repurchase agreements fully collateralized by such securities.

c. Property Tax

Taxes on real property are levied on July 1st of each year and are due on the third Monday in July. They can be paid in quarterly installments in August, October, January, and March. In the event of nonpayment, the County Treasurer is authorized to hold the property for two years, subject to redemption upon payment of taxes, penalties, and costs, together with interest at a rate of 10 percent per year from the date the taxes were due until paid. If delinquent taxes are not paid within the two year redemption period, the County Treasurer obtains a deed to the property free of all encumbrances. Upon receipt of a deed, the County Treasurer may sell the property to satisfy the tax lien.

Article X, Section 2 of the Constitution of the State of Nevada limits the total taxes levied by all overlapping governmental units within the boundaries of any County (i.e., the County, the County School District, the State and any other City, Town, or Special District) to an amount not to exceed $5 per $100 of assessed valuation of the property being taxed.

The Nevada Legislature enacted provisions whereby the combined overlapping tax rate was limited to $3.64 per $100 of assessed valuation.

NOTE A. SUMMARY OF SIGNIFICANT ACCOUNTING POLICIES (Continued)

8. Assets, Liabilities, Deferred Outflows/Inflows of Resources, and Net Position/Fund Balance (Continued)

d. Inventories and Prepaid Items

Inventories are valued at cost using the first-in/first-out (FIFO) method. The cost of such inventories is recorded as expenditures/expenses when consumed rather than when purchased.

Certain payments to vendors reflect costs applicable to future accounting periods and are recorded as prepaid items in both the government-wide and fund financial statements.

e. Restricted Assets

Certain cash assets of the Enterprise Funds are from revenue for specific use by the Enterprise Funds and are classified as restricted assets because their use is restricted by agreement. **(See Note D5)**

f. Capital Assets

Capital assets, which include property, plant and equipment, and infrastructure assets (e.g. roads, bridges, sidewalks, and similar items), are reported in the applicable governmental or business-type activities columns in the government-wide financial statements. Capital assets are defined by the County as assets with an initial individual cost of more than $500 and an estimated useful life in excess of one year.

If purchased or constructed, capital assets are recorded at historical cost or estimated historical cost and updated for additions and retirements during the year. Donated capital assets are valued at their estimated value as of the date of donation. The costs of normal maintenance and repairs that do not add to the value of the asset or materially extend the life of the asset are not capitalized.

Land and construction in progress are not depreciated. The other property, plant and equipment of the primary government are depreciated using the straight line method over the following estimated useful lives:

Capital Assets	Years
Vehicles	10
Equipment	5-20
Buildings and Improvements	20-50
Infrastructure	25-50

The County is required to report and depreciate new infrastructure assets. Infrastructure assets include roads, bridges, underground pipe (other than related to utilities), traffic signals, etc. Neither their historical cost nor related depreciation has historically been reported in the financial statements. The County is required to capitalize and report its major general infrastructure assets acquired in fiscal years ending after June 30, 1980. In addition, infrastructure assets acquired before June 30, 1980, that received significant reconstruction must be capitalized.

NOTE A. SUMMARY OF SIGNIFICANT ACCOUNTING POLICIES (Continued)

8. Assets, Liabilities, Deferred Outflows/Inflows of Resources, and Net Position/Fund Balance (Continued)

g. Deferred Outflows/Inflows of Resources

In addition to assets, the statement of financial position will sometimes report a separate section for deferred outflows of resources. This separate financial statement element, deferred outflows of resources, represents consumption of net position that applies to a future period(s) and so will not be recognized as an outflow of resources (expense/expenditure) until then. Deferred outflows include the County's pension related contributions subsequent to the measurement date but before the end of the fiscal year and changes in proportion of the District's contributions to the County's proportionate contributions.

In addition to liabilities, the statement of financial position will sometimes report a separate section for deferred inflows of resources. This separate financial statement element, deferred inflows of resources, represents an acquisition of net position that applies to a future period(s) and so will not be recognized as an inflow of resources (revenue) until that time. The County has only one type of item, which arises only under a modified accrual basis of accounting, which qualifies for reporting in this category. Accordingly, the item, unavailable revenue, is reported only in the governmental funds balance sheet. The governmental funds report unavailable revenues from one source, property taxes. This amount is deferred and recognized as an inflow of resources in the period that the amounts become available.

Deferred inflows of resources represent an acquisition of net positon that applies to a future period and will not be recognized as an inflow of resources (revenue) until that time. The difference between projected and actual experience and investment earnings are related to the deferred inflows of pensions and the calculation of net pension liability reported on the statement of net position.

For purposes of measuring the net pension liability, deferred outflows of resources and deferred inflows of resources related to pensions, and pension expense, information about the fiduciary net position of the Public Employees' Retirement System of Nevada (PERS) and additions to/deductions from PERS's fiduciary net position have been determined on the same basis as they are reported by PERS. For this purpose, benefit payments are recognized when due and payable in accordance with the benefit terms. Investments are reported at fair value.

h. Governmental Fund Balances:

In the governmental fund financial statements, fund balances are classified as follows:

(i.) **Nonspendable –** Amounts that cannot be spent either because they are in a nonspendable form or because they are legally or contractually required to be maintained intact, such as inventories and prepaids.

(ii.) **Restricted –** Amounts that can be spent only for a specific purpose because of the state or federal laws, or externally imposed conditions by grantors or creditors.

(iii.) **Committed** –These amounts can only be used for specific purposes as set forth by the County Commissioners. The Commissioners must take formal action (vote approval by the majority), in order to establish an ending fund balance commitment for any specific purpose. Formal Commission action is also required to modify or rescind an established commitment. To be reported as committed, amounts cannot be used for any other purpose unless the Commission takes the same highest level action to remove or change the constraint.

NOTE A. SUMMARY OF SIGNIFICANT ACCOUNTING POLICIES (Continued)

8. Assets, Liabilities, Deferred Outflows/Inflows of Resources, and Net Position/Fund Balance (Continued)

h. Governmental Fund Balances (Continued):

(iv.) Assigned – Assignments are neither restrictions nor commitments and represent the County's intent to use funds for a specific purpose. These assignments, however, are not legally binding and are meant to reflect intended future use of the County's ending fund balance. Intent can be expressed by the County Commissioners or by the County Auditor.

(v.) Unassigned – All amounts not included in other classifications.

i. Fund Balance Flow Assumption

Sometimes the County will fund outlays for a particular purpose from both restricted and unrestricted resources (the total of committed, assigned, and unassigned fund balance.) When fund balance resources are available for a specific purpose in more than one classification, it is the County's policy to use the most restrictive funds first in the following order: restricted, committed, assigned, and unassigned as they are needed.

j. Net Position Policies

In the government-wide statements, net position on the Statement of Net Position includes the following:

(i) Invested in Capital Assets, net of Related Debt

This is the component of net position that reports the difference between capital assets less both the accumulated depreciation and the outstanding balance of debt, excluding unexpended proceeds, that is directly attributable to the acquisition, construction, or improvement of those assets.

(ii) Restricted Assets

This is the component of net position that reports the constraints placed on the use of assets by either external parties and/or enabling legislation. Currently, the County restricts assets as follow:

a) NRS 354.598155 Special Ad Valorem Capital Projects
b) NRS 354.6113 Capital Projects Fund
c) NRS 365.190 Road Improvements
d) NRS 354.6115 Budget Stabilization
e) NRS 269 Unincorporated Towns

(iii) Unrestricted

This is the component of net position that is the difference between the assets and liabilities not reported in Invested in Capital Assets, Net of Related Debt and Restricted Assets.

k. Net Position Flow Assumption

Sometimes the County will fund outlays for a particular purpose from both restricted (e.g., restricted bond or grant proceeds) and unrestricted resources. In order to calculate the amounts to report as restricted – net position and unrestricted – net position in the government-wide and proprietary fund financial statements, a flow assumption must be made about the order in which the resources are considered to be applied. It is the County's policy to consider restricted – net position to have been depleted before unrestricted – net position is applied.

NOTE A. SUMMARY OF SIGNIFICANT ACCOUNTING POLICIES (Continued)

8. Assets, Liabilities, Deferred Outflows/Inflows of Resources, and Net Position/Fund Balance (Continued)

l. Comparative Data/Reclassifications

Comparative total data for the prior year has been presented in selected sections of the accompanying financial statements in order to provide an understanding of the changes in the County's financial position and operations. Also, certain amounts presented in the prior year data have been reclassified in order to be consistent with the current year's presentation.

m. Use of Estimates

The preparation of financial statements in conformity with generally accepted accounting principles requires management to make estimates and assumptions that affect the reported amounts of assets and liabilities and disclosures of contingent assets and liabilities at the date of the financial statements and the reported amounts of revenues and expenses during the period. Actual results could differ from those estimates.

n. Budgetary Stabilization

It is the County's policy to determine the balance or reserve as reasonable and necessary to carry out the purposes of the stabilization fund on a yearly basis. NRS 354.6115 authorizes the creation of a fund to stabilize operations of local governments and mitigate effects of natural disaster. The intent of this policy is to include a portion of the General Fund budgeted ending fund balance that will be restricted to stabilization pursuant to NRS 354.6115. Fund balance that is restricted to stabilization can be used after approval by the board of County Commissioners when total actual revenue falls short of the total anticipated revenue in the General Fund for the fiscal year in which the County uses the money.

9. Revenues and Expenditures/Expenses

a. Compensated Absences

Vested or accumulated vacation and sick leave that is expected to be liquidated with expendable available financial resources is reported as an expenditure and a fund liability of the governmental fund that will pay it. Amounts of vested or accumulated vacation leave that are not expected to be liquidated with expendable available financial resources are reported in the government-wide financial statements. No expenditure is reported for these amounts in the fund financial statements. (**See Note D6**) Vacation leave and sick leave included in accrued liabilities and recorded as expenditures in governmental fund types is the amount normally liquidated from "available spendable resources."

In proprietary funds, compensated absences are recorded when the liabilities are incurred. In governmental funds, the current portion is recorded as payroll expenditure. The estimated long-term liability for compensated absences is accounted for in the government-wide financial statements.

NOTE A. SUMMARY OF SIGNIFICANT ACCOUNTING POLICIES (Continued)

9. Revenues and Expenditures/Expenses (Continued)

b. Long-term Obligations

In the government-wide financial statements and proprietary fund types in the fund financial statements, long-term debt and other long-term obligations are reported as liabilities in the applicable governmental activities, business-type activities, or proprietary fund type Statement of Net Position. Bond premiums and discounts are deferred and amortized over the life of the bonds using the straight-line method. Bonds payable are reported net of the applicable bond premium or discount. Bond issuance costs are expensed when incurred.

In the fund financial statements, governmental fund types recognize bond premiums and discounts, as well as bond issuance costs, during the current period. The face amount of debt issued is reported as other financing sources. Premiums received on debt issuances are reported as other financing sources while discounts on debt issuances are reported as other financing uses. Issuance costs, whether or not withheld from the actual debt proceeds received, are reported as debt service expenditures.

c. Proprietary Funds Operating and Nonoperating Revenues and Expenses

Proprietary funds distinguish operating revenues and expenses from nonoperating items. Operating revenues and expenses generally result from providing services and producing and delivering goods in connection with a proprietary fund's principal ongoing operations. The principal operating revenues of the enterprise funds are charges to customers for sales and services. Operating expenses for enterprise funds include the cost of sales and services, administrative expenses, and depreciation on capital assets. All revenues and expenses not meeting this definition are reported as nonoperating revenues and expenses.

NOTE B. RECONCILIATION OF GOVERNMENT-WIDE AND FUND FINANCIAL STATEMENTS

1. Explanation of certain differences between the governmental funds Balance Sheet and the government-wide Statement of Net Position

The governmental fund balance sheet includes reconciliation between fund balances - total governmental funds and net position - governmental activities as reported in the government-wide statement of net position. One element of the reconciliation explains that "certain liabilities (such as bonds payable and capital leases payable) are not reported in the Governmental funds financial statements because they are not due and payable, but they are presented as liabilities in the statement of net position." The details of this difference are as follows:

Interest payable	$ (599)
Capital lease payable	(29,966)
Notes payable	(74,798)
Compensated absences	(438,130)
Net adjustment to reduce fund balance - total governmental funds to arrive at net position - governmental activities	$ (543,493)

NOTE B. RECONCILIATION OF GOVERNMENT-WIDE AND FUND FINANCIAL STATEMENTS (Continued)

2. Explanation of certain differences between the governmental funds Statement of Revenues, Expenditures, and Changes in Fund Balances and the government-wide Statement of Activities

The governmental fund Statement of Revenues, Expenditures, and Changes in Fund Balances includes a reconciliation between net changes in fund balances - total governmental funds and changes in net position of governmental activities as reported in the government-wide Statement of Activities. One element of that reconciliation explains that "Capital outlays to purchase or build capital assets are reported in Governmental Funds financial statements as expenditures. However, for governmental activities those costs are shown in the statement of net position and allocated over their estimated useful lives as annual depreciation expense in the statement of activities." The details of this difference are as follows:

Capital outlay	$ 2,476,007
Book value of disposed assets	(106,927)
Depreciation expense	(1,235,130)
Net adjustment to increase net changes in fund balances - total governmental funds to arrive at changes in net position of governmental activities	$ 1,133,950

Another element of that reconciliation states that, "The issuance of long-term debt (i.e., bonds, leases) provides current financial resources to governmental funds, while the repayment of the principal of long-term debt consumes the current financial resources of governmental funds. Neither transaction, however, has any effect on Net Position. Also, governmental funds report the effect of issuance costs, premiums, discounts, and other similar items when debt is first issued, whereas these amounts are deferred and amortized in the statement of activities. This amount is the net effect of these differences in the treatment of long-term debt and related items." The details of this difference are as follows:

General obligation debt principal payments	$ 115,939
Net adjustment to increase net change in fund balances – governmental funds to arrive at change in net position of governmental activities	$ 115,939

Another element of that reconciliation states that "Generally, expenditures recognized in the fund financial statements are limited to only those that use current financial resources, but expenses are recognized in the statement of activities when incurred." The details of this difference are as follows:

Accrued interest	$ 696
Compensated absences	625
Net adjustment to increase net change in fund balances – governmental funds to arrive at change in net position of governmental activities	$ 1,320

NOTE C. STEWARDSHIP, COMPLIANCE, AND ACCOUNTABILITY

1. Compliance and Accountability

The County conformed to significant statutory requirements regarding financial administrations except as follows:

Per NRS 354.626, the County is required to report expenditures that exceeded budgeted appropriations at the function level for the General Fund, Special Revenue Funds, and Capital Project Funds. Enterprise funds may not exceed budget appropriations at the fund level. For the year ending June 30, 2018, the County had the following expenditures over appropriations that are required to be reported.

General Fund – Health function	$ 9,748
Room Tax Fund – Culture and recreation function	$ 27,041
Room Tax Fund – Intergovernmental function	$ 585
Legal Aid Services Fund – Judicial function	$ 4,540
Genetic Marker Fund – General government function	$ 338
Detention Center – Enterprise Fund	$ 140,247

The General Fund over expenditure is related to an increase in the monthly payments for State Health Nurse. The Room Tax Fund over expenditure is related to an increase in Room Tax expenditures for local events and an increase in room tax revenues causing additional payments to the State. The Legal Aid Fund over expenditure is related to unanticipated legal services. Genetic Marker Fund over expenditures were due to an increase in required testing. The Detention Center expenditures were in excess of the authorized budget due to additional costs associated with an increase in inmate populations.

2. Deficit Fund Balance/Net Position

Airport Special Revenue Fund	$ 269
Detention Center Enterprise Fund	$ 2,359,765
Building Department Enterprise Fund	$ 77,293

The deficit net position of the Detention Center and Building Department Enterprise funds are due to the individual fund's proportionate share of the net pension liability of the Public Employees' Retirement System of the State of Nevada. See **Note D-12** of the financial statement. The Airport fund deficit is due to a short fall in expected revenues.

NOTE D. DETAILED NOTES ON ALL FUNDS

1. Pooled Cash and Investments

The County maintains a cash and investment pool that is available for use by all funds under the custody of the County Treasurer. At June 30, 2018, this pool is displayed by the statement of net position and major and other governmental funds on the governmental funds balance sheet as "Pooled Cash and Investments."

A reconciliation of cash and investments as shown in the Statement of Net Position is as follows:

Cash in the hands of officers	$ 301,972
Carrying amount of deposits	4,209,604
Fair value of investments	19,803,075
Total	$24,314,651

NOTE D. DETAILED NOTES ON ALL FUNDS (Continued)

1. Pooled Cash and Investments (Continued)

A reconciliation of cash and investments as for the County is as follows:

Government-wide pooled cash and investments	$19,854,508
Restricted cash	72,243
Total primary government	$19,926,751
Investment trust fund	3,691,584
Agency fund cash	696,316
Total reporting entity	$24,314,651

Except for financial reporting purposes, the cash balances of $4,387,900 in the Agency Funds are not normally considered part of the County's pooled cash and investments. These amounts represent cash held in an agency capacity by the County and cannot be used in the County's normal operations.

The cash and investment pool is available for use by all funds of the County. Cash and investments under the custody of the County Treasurer are invested as a pool. The County Treasurer may invest the money of the investment pool in investments which have been authorized as investments by Nevada Revised Statutes. (**See Note A8b**)

Investment income is apportioned to the funds within the pool monthly based on the average balance invested for the month.

State statutes authorize the County to invest in obligations of the U.S. Treasury, commercial paper, corporate bonds, repurchase agreements, and the State Treasurer's Investment Pool.

Cash and investment are subject to the following risks:

Interest Rate Risk: Interest rate risk is the risk of possible reduction in the value of a security, especially a bond, resulting from the rise in interest rates. Nevada Revised Statutes limits bankers' acceptances to 180 days of maturities, repurchase agreements to 90 days, U.S. Treasuries and Agencies to less than 10 years, and commercial paper to 270 days maturity. The approximate weighted average maturity of investments in the Lincoln County Treasurer's investment pool was 1.87 years.

As of June 30, 2018, monies held in the Lincoln County Treasurer's cash and investment pool are categorized as follows:

		Investment Maturities (In Years)		
Investment Type	Fair Value	Less than 1	1-5	6-10
U.S. Government and Agencies:				
U.S. Treasury note	$ 6,904,853	$ 1,324,298	$ 5,580,555	$ 0
U.S. Agency mortgage-backed	8,437,773	4,348,967	4,088,807	0
Money market funds	1,306,393	1,306,393	0	0
Negotiable certificates of deposit	3,154,056	0	3,154,056	0
Total Investments	$19,803,075	$ 6,979,658	$ 12,823,417	$ 0

Governmental Accounting Standards require fair value reporting of all investments. The fair value of the County's investments was determined by market quotes.

NOTE D. DETAILED NOTES ON ALL FUNDS (Continued)

1. Pooled Cash and Investments (Continued)

Credit Risk: Credit risk is the risk that an issuer or other counterparty to an investment will not fulfill its obligation and is a function of the credit quality ratings of its investments. The Nevada Revised Statutes limits investments instruments by their credit risk **(Note A8a)**. The State of Nevada Local Government Investment Pool is an unrated external investment pool.

As of June 30, 2018, monies held in the Lincoln County Treasurer's cash and investment pool are categorized as follows:

		Quality Ratings by Moody's	
Investment Type	Fair Value	Aaa	N/A
U.S. Government and Agencies:			
U.S. Treasury note	$ 6,904,853	$ 6,904,853	$ 0
U.S. Agency mortgage-backed	8,437,773	8,437,773	0
Money market funds	1,306,393	0	1,306,393
Negotiable certificates of deposit	3,154,056	0	3,154,056
Total Investments	$19,803,075	$ 15,342,626	$ 4,460,449

Custodial Credit Risk: Custodial credit risk is the risk that in the event of a bank or brokerage failure, the County's deposits may not be returned. The County's bank deposits are generally covered by FDIC insurance and are collateralized by the Office of the State Treasurer/Nevada Collateral Pool. At year-end, the County's carrying amount of deposits was $4,209,604 and the bank balance was $4,366,727. Of the bank balance, $327,190 was covered by federal depository insurance. Of the remaining balance, $4,039,537 was collateralized with securities held by the Nevada Pooled Collateral Program.

Concentrations of Credit Risk: Concentration of credit risk is defined as the risk of loss attributed to the magnitude of a government's investment in a single issuer. Investments with a single issuer within the Lincoln County Treasurer Cash and investment pool that represent five percent or more of total investments as of June 30, 2018, are as follows:

Federal Farm Credit Bank (FFCB)	10.39%	Federal Home Loan Banks (FHLB)	8.37%
Federal Home Loan Mortgage Corporation (FHLMC)	14.70%	U.S. Treasury Note	37.33%
Federal National Mortgage Association (FNMA)	12.16%		

Fair Value: The County implemented GASB Statement No. 72, Fair Value Measurement and Application, in 2016 to categorize its fair value measurements within the fair value hierarchy established by generally accepted accounting principles. The hierarchy is based on the valuation inputs used to measure the fair value of the asset. Level 1 inputs are quoted prices in active markets for identical assets; Level 2 inputs are significant other observable inputs; Level 3 inputs are significant unobservable inputs.

The County has the following recurring fair value measurements as of June 30, 2018:

Investment Type	Fair Value	Level 1	Level 2	N/A
U.S. Government and Agencies:				
U.S. Treasury note	$ 6,904,853	$ 6,904,853	$ 0	$ 0
U.S. Agency mortgage-backed	8,437,773	0	8,437,773	0
Money market mutual fund	1,306,393	0	0	1,306,393
Negotiable certificates of deposit	3,154,056	0	0	3,154,056
Total Investments	$19,803,075	$ 6,904,853	$ 8,437,773	$ 4,460,449

NOTE D. DETAILED NOTES ON ALL FUNDS (Continued)

1. Pooled Cash and Investments (Continued)

External Investment Pool: The County administers an external investment pool combining the County funds with involuntary investments from Caliente City, Lincoln County School District, Range, Panaca Fire Protection District, Pahranagat Fire District, Coyote Springs GID, Pioche Fire District, Southeastern Lincoln County Habitat Conservation Plan GID, and the Lincoln County Fire District. The Board of County Commissioners has the overall responsibility of investment of funds including the external investment pool in accordance with NRS 355.175. The Lincoln County Treasurer is delegated investment responsibilities. The fair value of investments is determined monthly as statements from the various investment companies are received. Each participant's share is equal to their original investment plus or minus monthly allocations of interest income, and realized and unrealized gains and losses. The County has not provided nor obtained any legally binding guarantees to support the value of the shares.

A summary of investments held in external investment pools at June 30, 2018, is as follows:

Investment Type	Fair Value	Principal Amount	Interest Rate
U.S. Government and Agencies:			
U.S. Treasury notes	$ 4,537,525	$ 4,630,000	Variable
U.S. Agency mortgage-backed	5,960,925	6,023,936	Variable
Money market funds	989,157	989,157	Variable
Negotiable certificates of deposit	3,154,056	3,245,000	Variable
Total Investments	$14,641,663	$ 14,888,093	

External Investment Pool Condensed Financial Statement
Statement of Net Position
June 30, 2018

Assets:	
Investments in securities	
U.S. Treasury notes	$ 4,537,525
U.S. Agency mortgage-backed	5,960,925
Money market funds	989,157
Negotiable certificates of deposit	3,154,056
Total investments held in external investment pools	$ 14,641,663
Net position held in trust for pool participants	
Net position consists of	
Internal participants	$ 10,950,080
External participants	3,691,583
Total net position held in trust for pool participants (Participant's units' outstanding, $1.00/par)	$ 14,641,663

Statement of Changes in Net Position
For the Year Ended June 30, 2018

Additions:	
Investment earnings	$ 104,275
Net change in fair value of investments	(102,604)
Change in net position resulting from operations	(13,901)
Net capital share transactions	0
Change in net position	1,671
Net position, beginning of year	14,639,992
Net position, end of year	$ 14,641,663

NOTE D. DETAILED NOTES ON ALL FUNDS (Continued)

2. Receivables

Below is the detail of receivables for each major fund and the nonmajor funds, in the aggregate, including the applicable allowances for uncollectible accounts:

Receivables as of year-end, net of the applicable allowances for uncollectible accounts, are as follows:

			Due From Other Governments							
Receivables:	Taxes	Interest	Grants	Gaming Taxes	Consolidated Taxes	Fuel Taxes	Other	Due from Others	Accounts Receivable	Total
General	$32,550	$ 4,053	$142,443	$3,306	$ 229,106	$ -	$22,558	$27,652	$ -	$ 461,668
Road	-	821	-	-	-	296,386	-	-	-	297,207
Federal In Lieu	-	8,816	57,609	-	-	-	-	-	-	66,425
Water Resources	-	9,362	-	-	-	-	-	-	-	9,362
Land Act Use	-	6,319	-	-	-	-	-	-	-	6,319
County Grant	-	561	479,664	-	-	-	-	-	-	480,225
Other Governmental Funds	20,787	19,050	19,428	-	20,269	20,964	-	1,679	-	102,177
Enterprise Funds	-	533	-	-	-	-	-	-	548,093	548,626
Total receivables	$53,337	$49,515	$699,144	$3,306	$ 249,375	$317,350	$22,558	$29,331	$ 548,093	$ 1,972,009

3. Capital Assets

Capital assets activity for the year ended June 30, 2018, was as follows:

Governmental Activities:

	Balance June 30, 2017	Additions	Dispositions	Balance June 30, 2018
Capital assets not being depreciated:				
Construction in progress	$ -	$ 1,501,975	$ -	$ 1,501,975
Land	1,809,860	-	-	1,809,860
Total capital assets not being depreciated	1,809,860	1,501,975	-	3,311,835
Capital assets being depreciated:				
Building and improvements	21,769,683	-	-	21,769,683
Infrastructure	2,150,970	-	-	2,150,970
Equipment	9,305,163	974,032	(436,683)	9,842,512
Total capital assets being depreciated	33,225,816	974,032	(436,683)	33,763,165
Less accumulated depreciation for:				
Building and improvements	6,249,332	783,267	-	7,032,599
Infrastructure	287,782	43,019	-	330,801
Equipment	5,542,249	408,844	(329,756)	5,621,337
Total accumulated depreciation	12,079,363	1,235,130	(329,756)	12,984,737
Total capital assets being depreciated, net	21,146,453	(261,098)	(106,927)	20,778,428
Governmental activities assets, net	$ 22,956,313	$ 1,240,877	$ (106,927)	$ 24,090,263

NOTE D. DETAILED NOTES ON ALL FUNDS (Continued)

3. Capital Assets

Business-type Activities:

	Balance June 30, 2017	Additions	Dispositions	Balance June 30, 2018
Capital assets not being depreciated:				
Land	$ 214,000	$ -	$ -	$ 214,000
Capital assets being depreciated:				
Building and improvements	1,224,803	132,892	-	1,357,695
Utility system	1,410,352	-	-	1,410,352
Equipment	1,603,203	95,326	-	1,698,529
Total capital assets being depreciated	4,238,358	228,218	-	4,466,576
Less accumulated depreciation for:				
Building and improvements	342,463	40,949	-	383,412
Utility system	616,632	40,245	-	656,877
Equipment	844,012	77,551	-	921,563
Total accumulated depreciation	1,803,107	158,745	-	1,961,852
Total capital assets being depreciated, net	2,435,251	69,473	-	2,504,724
Business-type activities assets, net	$ 2,649,251	$ 69,473	$ -	$ 2,718,724

Depreciation expense was charged to functions/programs of the primary government as follows:

Governmental activities:	
General government	$ 157,507
Public safety	129,878
Judicial	33,857
Public works	399,818
Health and sanitation	41,692
Welfare	18,969
Community support	19,958
Culture and recreation	433,451
	$ 1,235,130
Business activities:	
Building	$ 881
Water	27,008
Sewer	23,664
Electric	21,848
Solid waste	41,926
Detention center	43,418
	$ 158,745

NOTE D. DETAILED NOTES ON ALL FUNDS (Continued)

4. Accrued Liabilities

Accrued liabilities reported by governmental funds at June 30, 2018, were as follows:

Fund	Accrued Payroll and Benefits	Customer Deposits	Interest Payable
General	$ 213,130	$ -	$ -
Road	45,056	-	-
County Grants	14,813	-	-
Other Governmental Funds	68,797	-	-
Major Enterprise Funds	144,711	6,610	-
Nonmajor Enterprise Funds	13,952	1,760	1,336
Total	$ 500,459	$ 8,370	$ 1,336

5. Restricted Assets

The balances of the County's restricted asset accounts are as follows

Cash – Pioche Public Utility - Water	$ 20,748
Cash – Pioche Public Utility - Sewer	11,490
Cash – Solid Waste	40,005
Total restricted cash	$ 72,243

6. Long-term Debt

Governmental Type Activities:

Note Payable

a. The County borrowed money for the purchase of BLM land. The original principal of the note was $440,000. Payments are due in monthly installments of $4,383 through November, 2019, with interest at 5%.

Year Ending June 30,	Remaining Payments	Interest	Principal
2019	$ 52,589	$ 1,948	$ 50,641
2020	24,428	271	24,157
	$ 77,017	$ 2,219	$ 74,798

Capital Leases

a. The County entered into lease agreements for 4 public safety vehicles at $120,000. The leases have been classified as capital leases according to generally accepted accounting principles. The leases contain non-funding clauses whereby the leases are terminated without penalty should the County fail in a budget year to appropriate money for the payment. The vehicles have a ten-year estimated useful life. This year, $12,000 was included in depreciation expense. These lease agreements qualifies as a capital lease for accounting purposes and, therefore, has been recorded at the present value of future minimum lease payments as of the inception date. The lease was paid in full during the year.

NOTE D. DETAILED NOTES ON ALL FUNDS (Continued)

6. Long-term Debt

Governmental Type Activities: (Continued)

Capital Leases

b. During the year ending June 30, 2017, the County entered into a lease agreement for 3 public safety vehicles totaling $90,000. The leases have been classified as capital leases according to generally accepted accounting principles. The leases contain non-funding clauses whereby the leases are terminated without penalty should the County fail in a budget year to appropriate money for the payment. The vehicles have a ten-year estimated useful life. This year, $9,000 was included in depreciation expense. This lease agreement qualifies as a capital lease for accounting purposes and, therefore, has been recorded at the present value of future minimum lease payments as of the inception date. The future minimum lease obligations and the net present value of these minimum lease payments as of June 30, 2018, were as follows:

Year Ending June 30,	Remaining Payments	Amount Representing Interest	Present Value of Net Minimum Lease Payments
2018	$ 31,764	$ 1,798	$ 29,966

Business-Type Activities:

Revenue Bonds The County issues revenue bonds to provide funds for the acquisition and construction of utility capital assets. Revenue bonds have been issued for the business-type activities. Revenue bonds are an obligation of the enterprise utility funds for which the capital assets were acquired or constructed. Revenue bonds outstanding at June 30, 2018, are as follows:

a. $210,000, 2007 Pioche Town Sewer bond is payable to the U.S. Department of Agriculture-Rural Development. The bond is payable in semi-annual payments of $5,584 including interest. The interest rate is 4.375%. The bond agreement requires the County to establish and fund monthly a debt service reserve fund equal to 10% of the semi-annual payment each month over the life of the loan until they accumulate one annual installment. This reserve fund can be used for emergency maintenance and repairs, and debt repayment should the need arise. The required reserve as of June 30, 2018, is $11,490. The balance in the reserve account was $11,490 as of June 30, 2018 **(See Note D-5)**. The outstanding balance of bonds payable at June 30, 2018, was $183,937.

Annual debt service requirements to maturity for the revenue bond are as follows:

Year Ending June 30,	Principal	Interest
2019	$ 3,154	$ 8,014
2020	3,294	7,874
2021	3,440	7,728
2022	3,592	7,576
2023	3,751	7,417
2024-2028	21,403	34,437
2029-2033	26,560	29,280
2034-2038	32,981	22,859
2039-2043	40,945	14,895
2044-2048	44,817	5,009
	$ 183,937	$ 145,089

NOTE D. DETAILED NOTES ON ALL FUNDS (Continued)

6. Long-term Debt (Continued)

b. $350,000, 1980 Pioche Town Water bond due in monthly installments of $1,729, including interest at 5%, through 2020. The Water bond is payable to the Farmers Home Administration. The bond agreement requires the County to establish and maintain reserves sufficient to insure that loan installments will be paid on time and to pay for emergency maintenance of the facilities. The required reserve as of June 30, 2018, is $20,748. The balance in the reserve account was $20,748 as of June 30, 2018. The outstanding balance of bonds at June 30, 2018, was $27,175.

Annual debt service requirements to maturity for the Revenue Bonds are as follows:

Year Ending June 30,	Principal	Interest
2019	$ 19,537	$ 1,211
2020	7,638	200
	$ 27,175	$ 1,411

Changes in Long-term Debt: During the year ended June 30, 2018, the following changes occurred in long-term debt:

Governmental activities:

	Balance June 30, 2017	Net Additions	Net Deletions	Balance June 30, 2018	Due within One Year
Compensated absences	$ 438,755	$ -	$ 625	$ 438,130	$ 174,315
Net pension liability	8,035,351	-	457,756	7,577,595	-
OPEB obligation payable (restated)	784,154	-	299,167	484,987	-
Note payable	122,497	-	47,699	74,798	50,641
Capital lease payable	98,206	-	68,240	29,966	29,966
Total	$ 9,478,963	$ -	$ 873,487	$ 8,605,476	$ 254,922

Business-type activities:

	Balance June 30, 2017	Net Additions	Net Deletions	Balance June 30, 2018	Due within One Year
Compensated absences	$ 228,818	$ 16,327	$ -	$ 245,145	$ 151,943
Net pension liability	3,807,095	-	203,923	3,603,172	-
OPEB obligation payable (restated)	96,434	-	3,645	92,789	-
Landfill closure and postclosure costs	20,000	20,000	-	40,000	-
Bond payable	233,006	-	21,894	211,112	22,691
Total	$ 4,385,353	$ 36,327	$ 229,462	$ 4,192,218	$ 174,634

The compensated absence liability will be liquidated primarily by the General Fund. The note payable will be paid by the Federal in Lieu Fund. The capital leases will be paid by the Vehicle Capital Projects Fund.

Per Nevada Revised Statute Chapter 244A.059, the debt limitation for the County is equal to 10 percent of the assessed valuation of property, excluding motor vehicles for the current year. The debt limitation currently applicable at June 30, 2018, was $28,658,088.

NOTE D. DETAILED NOTES ON ALL FUNDS (Continued)

7. Interfund Transfers

Interfund operating transfers are made from one fund to another fund to support expenditures in accordance with the authority established for the individual funds. Transfers between fund types during the year ended June 30, 2018, were:

	Total	Transfer Out					
	Transfers In	General	Road	Federal In Lieu	LC Water District Water Resources	Nonmajor Special Revenue	Nonmajor Capital Projects
General Fund	$ 340,000	$ -	$ -	$ 340,000	$ -	$ -	$ -
County Grant Fund	78,762	-	-	31,041	-	47,721	-
Nonmajor Special Revenue Funds	265,197	50,000	-	32,197	100,000	83,000	-
Nonmajor Capital Projects Funds	223,817	16,000	100,000	-	-	-	107,817
Major Enterprise - Detention Center	21,820			21,820		-	
Major Enterprise - Solid Waste	175,151			175,151		-	
Nonmajor Enterprise Funds	40,000	-	-	40,000	-	-	-
Total	$ 1,144,747	$ 66,000	$ 100,000	$ 640,209	$ 100,000	$ 130,721	$ 107,817

Following are explanations of certain interfund transfers of significance to the County:

The General Fund transferred money to the following funds: Vehicle Capital Projects $16,000 and China Springs $10,000 to help cover costs. The General Fund also transferred funds to the Special Projects Fund, which is internally reported in the General Fund, for future projects. The Special Projects Fund did a budgeted transfer to the Property Management Fund to help cover construction costs of $40,000.

The Road Fund transferred $100,000 to the Road Capital Projects Fund to help cover the costs of a new equipment.

The Federal in Lieu Fund transferred money to the following funds: General Fund $265,000, Building Enterprise Fund $40,000, Solid Waste Fund $175,151, Detention Center Fund $21,820, Planning Fund $75,000, Agriculture Extension Fund $7,000, and Resource Development Fund $10,000. These budgeted transfers were made to help cover operating costs. Transfers were also made for $31,041 to the County Grant Fund and $15,197 to the Senior Nutrition Fund for grant match.

The Water District Water Resources Fund transferred $100,000 to the Water District General Fund to cover costs.

The Room Tax Fund transferred $20,000 to the Fair Board Fund to help cover costs and the Library Fund transferred $4,000 to the County Grants Fund. The Regional Transportation Commission Fund transferred $63,000 to the Transportation Fund for operations and $43,721 to the County Grants Fund for grant match.

The Capital Projects Fund transferred money to the following capital projects funds: $98,000 to the Vehicle Capital Projects for assistance with capital asset purchases; $9,817 to the Alamo, Panaca, and Pioche Town Capital Projects Funds for distribution of property taxes collected pursuant to Nevada Revised Statutes 354.59815.

NOTE D. DETAILED NOTES ON ALL FUNDS (Continued)

8. Interfund Receivable / Payable

During the 2017 fiscal year the County purchased the Landfill and created the Solid Waste Enterprise Fund. To help cover initial costs and have cash available, the fund borrowed monies from two special revenue funds which is to be repaid over 10 years at 0% interest. The funds which will receive those payments are as follows:

	Due to		Due from
Lincoln County Land Act	$ 190,000	Solid Waste Enterprise	$ 380,000
Lincoln County Water Special Use	190,000		
	$ 380,000		

Annual debt service requirements to maturity for the payable are as follows:

Year Ending June 30,	Principal
2019	$ 20,000
2020	20,000
2021	40,000
2022	40,000
2023	40,000
2024-2027	220,000
	$ 380,000

9. Unearned Revenue

Governmental funds report unearned revenue in connection with receivables for revenues that are not considered to be available to liquidate liabilities of the current period and also in connection with the resources that have been received but not yet earned. At June 30, 2018, the County had the following unearned revenues:

Qualifying expenditures for expenditure-driven grants have not occurred before June 30, 2018.

County Grant	Other Governmental	Total
$ 165,920	$ 144,572	$ 310,492

Nuclear Waste Fund Grant fund unspent interest as of June 30, 2018, is required by the granting agency to be deferred until spent. The following interest has been recorded as unearned revenue in the Nuclear Waste Fund of $33,508.

10. Unavailable Revenue

Delinquent taxes receivable not collected within sixty days after year-end are recorded as deferred inflows of resources as they are not available to pay liabilities of the current period. At June 30, 2018, the County had the following unavailable revenues:

General	Other Governmental	Total
$ 26,703	$ 11,758	$ 38,461

NOTE D. DETAILED NOTES ON ALL FUNDS (Continued)

11. Risk Management

Property, Casualty, Crime, and Machinery Insurance

The County is exposed to various risks of loss related to torts; theft of, damage to, and destruction of assets; errors and omissions; injuries to employees; and natural disasters. The County joined together with other local governments throughout the State of Nevada to create a pool under the Nevada Interlocal Cooperation Act. The Nevada Public Agency Insurance Pool (NPAIP) is a public entity risk pool currently operating as a common risk management and insurance program for members. The County pays an annual premium and specific deductibles, as necessary, to NPAIP for its general insurance coverage. NPAIP is considered a self-sustaining risk pool that will provide liability coverage for its members up to $10,000,000 per event and a $10,000,000 annual aggregate per member. Property, crime, and equipment breakdown coverage is provided to its members up to $300,000,000 per loss with various sub-limits established for earthquake, flood, equipment breakdown, and money and securities. As a participatory member, the maintenance deductible is $2,000 for each insured event.

The County is self-insured for unemployment claims. Payments are made from the general fund to cover claims.

The County participates in the Public Agency Compensation Trust (PACT). Premiums paid to PACT cover workers' compensation claims against the County. Premiums are based on a percentage of wages paid.

The County carries commercial insurance for all other risks of loss including employee health and accident insurance. Settled claims resulting from these risks have not exceeded commercial insurance coverage in any of the past three fiscal years.

12. Contingent Liabilities

Grants
Amounts received or receivable from grantor agencies are subject to audit and adjustment by those agencies, principally the Federal Government. Any disallowed claims, including amounts already collected, may constitute a liability of the applicable funds. The amount, if any, of expenditures which may be disallowed by the grantor cannot be determined at this time although the County expects such amounts, if any, to be immaterial.

Litigation
The County is a defendant in various lawsuits. Although the outcome of these lawsuits is not presently determinable, it is the opinion of the County's counsel that resolution of these matters will not have a material adverse effect on the financial condition of the County.

Landfill Closure and Post-Closure Costs
State and federal laws and regulations require the County to place a final cover on its landfill sites when it stops accepting waste and to perform certain maintenance and monitoring functions at the sites for thirty years after closure. The closure and post-closure care costs will be paid only near or after the date that the landfills stop accepting waste.

As of June 30, 2018, the estimated liability to date for closure and post-closure costs is $40,000. This represents the cumulative amount reported to date based on percent use of the estimated liability of $1,700,000 as the remaining capacity is used. Actual costs may be higher due to inflation, changes in technology, or changes in regulations. The County operates one landfill with an estimated remaining life of 39 years. As of June 30, 2018, $40,005, has been restricted for future closure, post-closure, and opening landfill costs in the Solid Waste Fund. The County is presently using the "Local Government Test" as financial assurance mechanism for its closure and post-closure costs.

NOTE D. DETAILED NOTES ON ALL FUNDS (Continued)

13. Defined Benefit Pension Plan

Plan Description. All half time and greater County employees are provided pension benefits through the Public Employees' Retirement System of the State of Nevada (PERS), a cost sharing multiple-employer, defined benefit plan administered by the Public Employees' Retirement System of the State of Nevada. PERS provides retirement benefits, disability benefits, and death benefits, including annual cost of living adjustments, to plan members and their beneficiaries. NRS Chapter 286 establishes the benefit provisions provided to the participants of PERS. These benefit provisions may only be amended through legislation. The Public Employees' Retirement System of the State of Nevada issues a publicly available financial report that includes financial statements and required supplementary information for PERS that can be obtained at www.nvpers.org under Quick Links — Publications.

Benefits Provided. Benefits, as required by the Nevada Revised Statutes (NRS or statute), are determined by the number of years of accredited service at time of retirement and the member's highest average compensation in any 36 consecutive months. Vested members are entitled to a life-time monthly retirement benefit equal to the service time multiplier (STM) percentages listed below times the member's years of service to a maximum of 30 years. The schedule of Eligibility for Monthly Unreduced Retirement Benefits for regular members and police/fire members are as follows:

Eligibility for Regular Members:

Years of Service	Hired prior to 07/01/01		Hired between 07/01/01-12/31/09		Hired Between 12/31/09-07/01/15		Hired After 7/1/15	
	Age	STM%	Age	STM%	Age	STM%	Age	STM%
5 years	65	2.50%	65	2.67%	65	2.50%	65	2.25%
10 years	60	2.50%	60	2.67%	62	2.50%	62	2.25%
30 years	Any	2.50%	Any	2.67%	Any	2.50%	55	2.25%
33 1/3 years							Any	2.25%

Eligibility for Police and Fire Members:

Years of Service	Hired prior to 07/01/01		Hired between 07/01/01-12/31/09		Hired Between 12/31/09-07/01/15		Hired After 7/1/15	
	Age	STM%	Age	STM%	Age	STM%	Age	STM%
5 years	66	2.50%	66	2.67%	65	2.50%	65	2.50%
10 years	55	2.50%	55	2.67%	60	2.50%	60	2.50%
20 years	50	2.50%	50	2.67%	50	2.50%	50	2.50%
25 years	Any	2.50%	Any	2.67%				
30 years					Any	2.50%		

* Only service performed in a position as a police officer or firefighter may be counted towards eligibility for retirement as Police/Fire accredited service.

Benefit payments to which participants or their beneficiaries may be entitled under the plan include pension benefits, disability benefits, and survivor benefits. The System offers several alternatives to the unmodified service retirement allowance which, in general, allow the retired employee to accept a reduced service retirement allowance payable monthly during his or her lifetime and various optional monthly payments to a named beneficiary after his or her death. Post-retirement increases are provided by authority of NRS 286.575 - .579.

The normal ceiling limitation on monthly benefits allowances is 75% of average compensation. However, a member who has an effective date of membership before July 1, 1985, is entitled to a benefit of up to 90% of average compensation. Both Regular and Police/Fire members become fully vested as to benefits upon completion of five years of service.

NOTE D. DETAILED NOTES ON ALL FUNDS (Continued)

13. Defined Benefit Pension Plan (Continued)

Contributions: Benefits for plan members are funded under the employer pay contribution plan. The County is required to contribute all amounts due under the plan. PERS receives an actuarial valuation on an annual basis indicating the contribution rates required to fund the System on an actuarial reserve basis. Contributions actually made are in accordance with the required rates established by the Nevada Legislature. These statutory rates are increased/decreased pursuant to NRS 286.421 and 286.450. The County's required contribution rates for the year ending June 30, 2018, were 40.50% for police and fire; 28.00% for regular employees; 41.0% for judge; and 14.00% employee/employer match. The County has fully funded the amounts due for the year ending June 30, 2018. For purposes of GASB No. 82, the County recognized only the employer portion as a deferred outflow.

The actuary funding method used is the Entry Age Normal Cost Method. It is intended to meet the funding objective and result in a relatively level long-term contribution requirement as a percentage of salary.

Pension Liabilities, Pension Expense, and Deferred Outflows of Resources and Deferred Inflows of Resources Related to Pensions

At June 30, 2018, the County reported a liability of $11,180,767 for its proportionate share of the net pension liability. The net pension liability was measured as of June 30, 2017, and the total pension liability used to calculate the net pension liability was determined by an actuarial valuation as of that date. The County's allocation percentage of the net pension liability was based on the total contributions due on wages paid during the measurement period. Each employer's proportion of the net pension liability is based on their combined employer and member contributions relative to the total combined employer and member contributions for all employers for the period ended June 30, 2017. At June 30, 2017, the County's proportion was 0.08407 percent.

For the year ended June 30, 2018, the County recognized pension expense of $492,562. At June 30, 2018, the County reported deferred outflows of resources and deferred inflows of resources related to pensions from the following sources:

	Deferred Outflows of Resources	Deferred Inflows of Resources
Differences between expected and actual results	$ 0	$ 733,684
Net difference between projected and actual earnings on pension plan investments	72,595	0
Changes in proportion	252,846	491,782
Changes in assumption	741,738	
County Contributions subsequent to measurement date	647,631	0
Total	$ 1,714,810	$ 1,225,466

NOTE D. DETAILED NOTES ON ALL FUNDS (Continued)

13. Defined Benefit Pension Plan (Continued)

$647,631 was reported as deferred outflows of resources related to pensions resulting from County contributions subsequent to the measurement date will be recognized as a reduction of the net pension liability in the year ended June 30, 2018. Other amounts reported as deferred outflows of resources and deferred inflows of resources related to pensions will be recognized in pension expense as follows:

Year ended June 30:	
2018	$(234,863)
2019	230,730
2020	41,992
2021	(245,939)
2022	29,203
2023	20,590
	$(158,287)

Actuarial Assumptions: The System's net pension liability was measured as of June 30, 2017, and the total pension liability used to calculate the net pension liability was determined by an actuarial valuation as of that date. The total pension liability was determined using the following actuarial assumptions, applied to all periods included in the measurement:

Inflation rate	2.75%
Payroll Growth	5.00%, including inflation
Investment Rate of Return	7.50%
Productivity pay increase	0.50%
Projected Salary increases	Regular: 4.25% to 9.15%, depending on service
	Police/Fire: 4.55% to 13.90%, depending on service
	Rates include inflation and productivity increases
Consumer Price Index	2.75%

Changes of assumptions and other inputs reflect a change in the discount rate from 8.00% as of June 30, 2016, to 7.50% as of June 30, 2017.

Mortality rates were based on the RP-2000 Combined Healthy Mortality Table for Males and Females, as appropriate, with adjustments for mortality improvements based on Scale AA.

Actuarial assumptions used in the June 30, 2017, valuation were based on the results of the experience review completed in 2017.The System's policies, which determine the investment portfolio target asset allocation, are established by the Public Employees' Retirement Board. The asset allocation is reviewed annually and is designed to meet the future risk and return needs of the System.

NOTE D. DETAILED NOTES ON ALL FUNDS (Continued)

13. Defined Benefit Pension Plan (Continued)

The following was the Board adopted policy target asset allocation as of June 30, 2017:

Asset Class	Target Allocation	Long-Term Geometric Expected Real Rate of Return*
Domestic Equity	42%	5.50%
International Equity	18%	5.75%
Domestic Fixed	30%	0.25%
Private Markets	10%	6.80%

*As of June 30, 2017, PERS' long-term inflation assumption was 2.75%

Discount Rate: The discount rate used to measure the total pension liability was 7.50% as of June 30, 2017. The projection of cash flows used to determine the discount rate assumed that employee and employer contributions will be made at the rate specified in statute. Based on that assumption, the pension plan's fiduciary net position at June 30, 2017, was projected to be available to make all projected future benefit payments of current active and inactive employees. Therefore, the long-term expected rate of return on pension plan investments was applied to all periods of projected benefit payments to determine the total pension liability as of June 30, 2017.

Sensitivity of the County's proportionate share of the net pension liability to change in the discount rate: The following presents the County's proportionate share of the net pension liability calculated using the discount rate of 7.50 percent, as well as what the County's proportionate share of the net pension liability would be if it were calculated using a discount rate that is 1 percent higher or lower than the current rate.

	1.0% Decrease (7.0%)	Discount Rate (8.0%)	1.0% Increase (9.0%)
County's proportionate share of the net pension liability	$ 16,902,821	$ 11,180,767	$ 6,429,266

Pension Plan Fiduciary Net Position: Detailed information about the pension plan's fiduciary net position is available in the PERS Comprehensive Annual Financial Report, available on the PERS website.

Pension contributions payable: At June 30, 2018, the County reported payables to the defined benefit pension plan of $25,961 for legally required employer contributions which had not yet been remitted to PERS.

NOTE D. DETAILED NOTES ON ALL FUNDS (Continued)

14. Post-Employment Healthcare Plan

Plan Description: The County subsidizes eligible retirees' contributions to the Public Employees' Benefits Plan (PEBP), an agent multiple-employer defined benefit postemployment health care plan administered by the State of Nevada. The plan provides medical, vision, dental and life insurance benefits to eligible retired County employees and beneficiaries. NRS 287.041 assigns the authority to establish and amend benefit provisions to the PEBP nine-member board of trustees. The plan is now closed to current County retirees. However, County employees who previously met the eligibility requirement for retirement within the Nevada Public Employees' Retirement System had the option upon retirement to enroll in coverage under the PEBP and the subsidy provided by the County was determined by their number of years of service. The PEBP issues a publicly available financial report that includes financial statements and required supplementary information. That report may be obtained by writing to Public Employee's Benefits Program, 901 S. Stewart Street, Suite 1001, Carson City, NV 89701, by calling (775) 684-7000, or by accessing the website at https://pebp.state.nv.us under Resources – Fiscal & Utilization Reports.

Employees covered by benefit terms. At June 30, 2018, the following employees were covered by the benefit terms:

Inactive employees or beneficiaries currently receiving benefit payments	25
Inactive employees entitled to but not yet receiving benefit payments	0
Active employees	0
	25

Funding Policy NRS 287.046 establishes the subsidies to be contributed toward the premium costs of the eligible retired County employees. As noted above, the County policy is to only fund retirees who retired prior to July 1, 2009. Plan members receiving benefits have their monthly contributions deducted from their pension checks based on the health plan chosen by the retiree as reduced by the amount of the subsidy. Effective July 2015, the subsidy provided to pre-Medicare retirees varies based on the type of plan selected (PPO or HMO) and by the level of coverage taken (e.g., single, two party, family, etc.). The chart below shows our understanding of monthly amounts currently payable for those with 15 years of PERS service.

Coverage Level	PPO CDHP	Standard HMO	Alternate HMO
	15 Years of Service		
Retiree Only	$ 709.19	$ 429.26	$ 412.43
Retiree + Spouse	1,158.03	678.83	645.18
Retiree + Child(ren)	1,098.13	557.66	530.78
Retiree + Family	1,546.96	807.23	763.52

All Medicare eligible retirees participate in a Medicare Exchange with PEBP providing a service related contribution to a Health Reimbursement Arrangement (HRA) equal to $12 per month per year of service (maximum $240 per month). The contribution requirements of plan members and the County are established and amended by the PEBP board of trustees. As a participating employer, the County is billed for the subsidy on a monthly basis and is legally required under NRS 287.023 to provide for it.

For fiscal year 2018, the County contributed $51,515 to the plan for current premiums. The County did not prefund any future benefits.

NOTE D. DETAILED NOTES ON ALL FUNDS (Continued)

14. Post-Employment Healthcare Plan (Continued)

Important Dates used in the Valuation:

Valuation Date:	June 30, 2017
Measurement Date:	June 30, 2017
Measurement Period:	June 30, 2016 to June 30, 2017
Fiscal Year End:	June 30, 2018

Significant Results and Differences from the Prior Valuation:

This is the first report reflecting the requirements of Governmental Accounting Standards Board Statement No. 75. The assumptions used to develop the information in this report are the same assumptions used for the June 30, 2017, valuation. The only difference is the discount rate applied to develop the liability at the beginning of the measurement period, as required by Governmental Accounting Standards Board Statement No. 75. The beginning of the period liability was calculated by rolling back the June 30, 2017, valuation results.

Total Other Post-Employment Benefits (OPEB) Liability

The County's OPEB liability of $577,776 was measured as of June 30, 2017, and determined by actuarial valuation as of that date.

The County has elected to calculate the total OPEB liability and related information using the alternative measurement method permitted by Governmental Accounting Standards Board Statement No. 75 for employers in plans with fewer than one hundred total plan members.

Actuarial Assumptions and Other Inputs: The total OPEB liability in the June 30, 2017, actuarial valuation was determined using the following actuarial assumptions and other inputs, applied to all periods included in the measurement:

	PEBP
Inflation rate	2.75%
Salary Increase	Not applicable; there are no active employees in this plan.
Discount Rate	3.13%
Healthcare Cost Trend Rates	7.00% decreasing 0.5% per year to an ultimate rate of 5.00% for 2023 and later years.
Retirees' share of benefit-related costs	0%

The discount rate was based on the S & P General Obligation Municipal Bond 20 year High Grade Index.

Mortality rates were based on the social security administration's actuarial life tables.

Actuarial assumptions used in the June 30, 2017, valuation were based on the results of an actuarial experience study for the period of June 30, 2016, to June 30, 2017.

NOTE D. DETAILED NOTES ON ALL FUNDS (Continued)

14. Post-Employment Healthcare Plan (Continued)

Changes in the Total OPEB Liability

	PEBP
Service cost	$ 0
Interest	27,562
Changes of benefit terms	0
Differences between expected and actual experience	0
Changes in assumptions or other inputs	(270,391)
Benefit payments	(59,983)
Net changes	(302,812)
Net OPEB obligation - beginning of the year	0
Restated for GASB 75	880,588
Net OPEB obligation - beginning of the year	880,588
Net OPEB obligation - end of year	$ 577,776

Changes of assumptions and other inputs reflect a change in the discount rate from 2.68% as of June 30, 2016, to 3.13% as of June 30, 2017.

Sensitivity of the County's total OPEB liability to changes in the discount rate. The following presents the total OPEB liability of the County, as well as what the County's total OPEB liability would be if it were calculated using a discount rate that is 1 percent higher or lower than the current rate.

	1.0% Decrease (2.13%)	Discount Rate (3.13%)	1.0% Increase (4.13%)
PEBP	$ 627,111	$ 577,776	$ 534,105

Sensitivity of the County's total OPEB liability to changes in the healthcare cost trend rates. The following presents the total OPEB liability of the County, as well as what the County's total OPEB liability would be if it were calculated using healthcare cost trend rates that are 1 percent higher or lower than the current healthcare cost trend rates:

	1.0% Decrease (6% decreasing to 4.0%)	Discount Rate (7% decreasing to 5.0%)	1.0% Increase (8% decreasing to 6.0%)
PEBP	$ 532,011	$ 577,776	$ 628,535

NOTE D. DETAILED NOTES ON ALL FUNDS (Continued)

OPEB Expense, Deferred Outflows of Resources, and Deferred Inflows of Resources Related to OPEB

For the year ended June 30, 2018, the County recognized OPEB expense of $249,809. At June 30, 2018, the County reported deferred outflows of resources and deferred inflows of resources related to pensions from the following sources:

	Deferred Outflows of Resources	Deferred Inflows of Resources
Differences between expected and actual results	$ 0	$ 0
Changes of assumptions or other inputs	0	0
County Contributions subsequent to measurement date	51,515	0
Total	$ 51,515	$ 0

$51,515 reported as deferred outflows of resources related to OPEB resulting from County contributions subsequent to the measurement date will be recognized as a reduction of the total OPEB liability in the year ended June 30, 2019. There were no other amounts reported as deferred outflows of resources and deferred inflows of resources related to OPEB to be recognized as OPEB expense.

15. Water Sales

The Water District has entered into a water delivery teaming agreement. The purpose of the agreement is to develop a water infrastructure and provide wholesale water to adjoining water districts and/or developers who require water. Investment to develop the water sources are funded by the partner. The Water District is not required to provide funding. Should projects fail, the Water District has no liability for costs incurred by the partner. If the projects are completed and revenues are generated from the sale of water, revenues collected will be applied to the investment of the partner until paid in full for the successful projects. After payment of project expenditures, the Water District will be entitled to 50 percent of remaining monies. Should the Water District withdraw from the agreement, the Water District will be required to reimburse the partner's investment costs. Revenues, if any, from water sales are recorded in the Lincoln County Water District funds.

16. Change in Accounting Principle

Effective July 1, 2017, the County adopted Governmental Accounting Standards Board Statement (GASB) No. 75, *Accounting and Financial Reporting for Postemployment Benefits Other than Pensions*. GASB No. 75 addresses accounting and financial reporting for other postemployment benefits provided to the County's employees through the Nevada Public Employees' Benefit Plan (PEBP). The statement also requires various note disclosures and required supplementary information. The effect of the implementation of this standard on beginning net position is disclosed in Note D-18.

NOTE D. DETAILED NOTES ON ALL FUNDS (Continued)

17. Correction of Errors

Governmental Accounting Standards Board (GASB) Statement No. 82, *Pension Issues – An Amendment of GASB No. 67, No. 68, and No. 73.* was effective for periods beginning after June 15, 2016. GASB 82 addresses some issues raised with previous GASB statements including No. 68. More specifically, GASB No. 82 addressed the following issues: (1) the presentation of payroll-related measures in required supplementary information, (2) the selection of assumptions and the treatment of deviations from the guidance in an Actuarial Standard of Practice for financial reporting purposes, and (3) the classification of payments made by employers to satisfy employee (plan member) contribution requirements.

Certain errors occurred in the determination or classification of payments to satisfy employee contribution requirements in the adoption, as of July 1, 2016, of GASB Statement No. 82, *Pension Issues – An Amendment of GASB No. 67, No. 68, and No. 73* resulting in the overstatement of amounts previously reported for deferred outflows of resources, net pension liability-related amounts for the year ended June 30, 2017. Corrections of the amounts for deferred outflows of resources have resulted in a restatement of net position as of July 1, 2017.

Because PERS is a state-wide multi-employer plan that covers substantially all employees of the State, its agencies, and its political subdivisions, including the employees of the County, it is the responsibility of the State Controller's office to perform the GASB calculations according to the applicable pension related statements and disseminate that information to the applicable agencies and political subdivisions for inclusion in their audited financial statements. The eventual dissemination of the GASB No. 82 information occurred after most of the State's political subdivisions had already issued and filed their audited financial statements.The County did not receive the GASB No. 82 information in time to include it in its fiscal year 2017 audited financial statements; accordingly, the County implemented GASB No. 82 in fiscal year 2018. The effect of the implementation of these standards on beginning net position is disclosed in Note D-18.

18. Change in Net Position

As of July 1, 2017, the County adopted Governmental Accounting Standards Board Statement No. 75, *Accounting and Financial Reporting for Postemployment Benefits Other than Pensions* and Governmental Accounting Standards Board Statement No. 82, *Pension Issues.* The effect of the implementation of these standards on beginning net position is as follows:

	Governmental	Business-Type
Net position previously reported, July 1, 2017	$ 34,154,240	$ (461,902)
Change in total OPEB liability (GASB 75-OPEB)	(784,154)	(96,434)
Deferred outflows of resources for contributions made subsequent to the measurement date (GASB 75-OPEB)	49,358	10,625
Deferred outflows of resources for contributions made subsequent to the measurement date (GASB 82-Pension)	(451,620)	(200,322)
Deferred inflows of resources for differences between employer contributions and proportionate share of contributions (GASB 82-Pension)	87,642	39,073
Net position as restated	$33,055,466	$ (708,960)

LINCOLN COUNTY, NEVADA
REQUIRED SUPPLEMENTARY INFORMATION
MAJOR FUND - GENERAL FUND
SCHEDULE OF REVENUES, EXPENDITURES AND CHANGES IN FUND BALANCE
BUDGET (BUDGETARY BASIS) AND ACTUAL
Year Ended June 30, 2018

	Original Budget	Final Budget	Actual	Variance With Final Budget Positive (Negative)
Revenues:				
Taxes:				
Property taxes	$ 2,180,803	$ 2,180,803	$ 2,132,619	$ (48,184)
Licenses and permits:				
Business licenses	7,200	7,200	10,325	3,125
Liquor licenses	5,100	5,100	6,047	947
Gaming licenses	5,200	5,200	2,912	(2,288)
Marriage licenses	650	650	588	(62)
Total licenses and permits	18,150	18,150	19,872	1,722
Intergovernmental:				
Gaming tax	141,000	141,000	134,621	(6,379)
Private car line tax	4,100	4,100	3,945	(155)
Water District	7,000	7,000	21,597	14,597
Consolidated tax	1,260,971	1,260,971	1,304,072	43,101
Grants	28,305	28,305	43,699	15,394
Marijuana fees	-	-	88,235	88,235
Fish and wildlife	-	-	2,555	2,555
Total intergovernmental	1,441,376	1,441,376	1,598,724	157,348
Charges for services:				
Clerk fees	6,000	6,000	11,254	5,254
Recorder fees	50,000	50,000	64,079	14,079
Assessor commissions	65,500	65,500	30,492	(35,008)
Sheriff fees	2,500	2,500	7,402	4,902
Tax penalties and costs	45,000	45,000	50,533	5,533
District attorney fees	500	500	156	(344)
Civil fees	-	-	3,096	3,096
Security contract	122,000	122,000	122,000	-
Caliente police contract	75,000	75,000	64,800	(10,200)
Caliente court contract	7,000	7,000	3,150	(3,850)
Total charges for services	373,500	373,500	356,962	(16,538)
Fines and forfeitures:				
Fines and forfeitures	360,000	360,000	293,668	(66,332)
Miscellaneous:				
Investment income	10,000	10,000	661	(9,339)
Rent, sales, refunds	40,000	40,000	46,812	6,812
Solid waste	4,000	4,000	-	(4,000)
Other	5,000	5,000	8,129	3,129
Total miscellaneous	59,000	59,000	55,602	(3,398)
Total revenues	$ 4,432,829	$ 4,432,829	$ 4,457,447	$ 24,618

See accompanying notes to required supplementary information.

LINCOLN COUNTY, NEVADA
REQUIRED SUPPLEMENTARY INFORMATION
MAJOR FUND - GENERAL FUND
SCHEDULE OF REVENUES, EXPENDITURES AND CHANGES IN FUND BALANCE
BUDGET (BUDGETARY BASIS) AND ACTUAL (CONTINUED)
Year Ended June 30, 2018

	Original Budget	Final Budget	Actual	Variance With Final Budget Positive (Negative)
General government:				
Administration:				
County commissioners:				
Salaries and wages	$ 113,721	$ 132,721	$ 132,382	$ 339
Employee benefits	70,948	81,948	89,735	(7,787)
Services and supplies	16,500	16,500	15,067	1,433
Total county commissioners	201,169	231,169	237,184	(6,015)
Executive officer:				
Salaries and wages	21,008	21,008	20,523	485
Employee benefits	11,555	11,755	11,574	181
Services and supplies	900	900	797	103
Total executive officer	33,463	33,663	32,894	769
Clerk:				
Salaries and wages	123,116	123,116	115,479	7,637
Employee benefits	50,754	50,754	50,139	615
Services and supplies	45,600	45,600	14,424	31,176
Total clerk	219,470	219,470	180,042	39,428
Treasurer:				
Salaries and wages	111,716	111,716	109,779	1,937
Employee benefits	48,681	48,681	48,253	428
Services and supplies	11,830	11,830	10,878	952
Total treasurer	172,227	172,227	168,910	3,317
Auditor and recorder:				
Salaries and wages	157,924	157,924	155,078	2,846
Employee benefits	67,574	67,574	66,821	753
Services and supplies	16,467	16,467	13,796	2,671
Total auditor and recorder	241,965	241,965	235,695	6,270
Assessor:				
Salaries and wages	144,284	144,284	142,348	1,936
Employee benefits	69,726	69,726	69,380	346
Services and supplies	23,000	23,000	12,396	10,604
Total assessor	237,010	237,010	224,124	12,886
Grant administrator:				
Salaries and wages	54,747	54,747	54,747	-
Employee benefits	19,469	19,469	19,478	(9)
Services and supplies	8,200	8,200	7,670	530
Total grant administrator	82,416	82,416	81,895	521

See accompanying notes to required supplementary information.

LINCOLN COUNTY, NEVADA
REQUIRED SUPPLEMENTARY INFORMATION
MAJOR FUND - GENERAL FUND
SCHEDULE OF REVENUES, EXPENDITURES AND CHANGES IN FUND BALANCE
BUDGET (BUDGETARY BASIS) AND ACTUAL (CONTINUED)
Year Ended June 30, 2018

	Original Budget	Final Budget	Actual	Variance With Final Budget Positive (Negative)
General government (Continued):				
Business license:				
Salaries and wages	$ 5,105	$ 5,105	$ 7,361	$ (2,256)
Employee benefits	1,778	1,778	1,656	122
Services and supplies	1,500	1,500	1,266	234
Total business license	8,383	8,383	10,283	(1,900)
Buildings and grounds:				
Pioche:				
Salaries and wages	30,076	30,076	44,342	(14,266)
Employee benefits	8,439	8,439	8,808	(369)
Services and supplies	148,825	148,825	100,263	48,562
Total Pioche	187,340	187,340	153,413	33,927
Alamo:				
Salaries and wages	8,109	8,109	8,316	(207)
Employee benefits	854	854	884	(30)
Services and supplies	15,033	15,033	14,131	902
Total Alamo	23,996	23,996	23,331	665
Total buildings and grounds	211,336	211,336	176,744	34,592
Other general expenses:				
Employee benefits	56,000	56,000	51,229	4,771
Services and supplies	203,205	212,582	156,061	56,521
Total other general expenses	259,205	268,582	207,290	61,292
Total general government	1,666,644	1,706,221	1,555,061	151,160

See accompanying notes to required supplementary information.

LINCOLN COUNTY, NEVADA
REQUIRED SUPPLEMENTARY INFORMATION
MAJOR FUND - GENERAL FUND
SCHEDULE OF REVENUES, EXPENDITURES AND CHANGES IN FUND BALANCE
BUDGET (BUDGETARY BASIS) AND ACTUAL (CONTINUED)
Year Ended June 30, 2018

	Original Budget	Final Budget	Actual	Variance With Final Budget Positive (Negative)
Public safety:				
Sheriff:				
Salaries and wages	$ 883,197	$ 883,197	$ 830,042	$ 53,155
Employee benefits	521,940	521,940	528,502	(6,562)
Services and supplies	194,269	194,269	170,678	23,591
Capital outlay	-	-	22,353	(22,353)
Total sheriff	1,599,406	1,599,406	1,551,575	47,831
Emergency management:				
Salaries and wages	34,050	34,050	35,148	(1,098)
Employee benefits	10,800	10,800	9,952	848
Services and supplies	5,100	5,100	-	5,100
Total emergency management	49,950	49,950	45,100	4,850
Caliente contract:				
Salaries and wages	87,306	87,306	78,323	8,983
Employee benefits	47,778	47,778	47,479	299
Services and supplies	4,600	4,600	1,405	3,195
Total Caliente contract	139,684	139,684	127,207	12,477
Total public safety	1,789,040	1,789,040	1,723,882	65,158
Judicial:				
District court:				
Salaries and wages	118,245	118,245	93,746	24,499
Services and supplies	217,300	292,300	292,195	105
Total district court	335,545	410,545	385,941	24,604
District attorney:				
Salaries and wages	233,770	243,770	240,539	3,231
Employee benefits	95,396	100,796	96,683	4,113
Services and supplies	30,000	50,000	43,967	6,033
Capital outlay	-	1,600	-	1,600
Total district attorney	359,166	396,166	381,189	14,977

See accompanying notes to required supplementary information.

LINCOLN COUNTY, NEVADA
REQUIRED SUPPLEMENTARY INFORMATION
MAJOR FUND - GENERAL FUND
SCHEDULE OF REVENUES, EXPENDITURES AND CHANGES IN FUND BALANCE
BUDGET (BUDGETARY BASIS) AND ACTUAL (CONTINUED)
Year Ended June 30, 2018

	Original Budget	Final Budget	Actual	Variance With Final Budget Positive (Negative)
Judicial (Continued):				
Law library	$ 12,100	$ 12,100	$ 7,168	$ 4,932
Public guardian	4,750	4,750	1,608	3,142
Public administrator	3,250	3,250	19	3,231
Justice court:				
Juvenile officers:				
Salaries and wages	60,191	60,191	60,963	(772)
Employee benefits	32,639	32,639	31,404	1,235
Services and supplies	21,000	21,000	12,013	8,987
Total juvenile officers	113,830	113,830	104,380	9,450
Alamo:				
Salaries and wages	140,629	140,629	145,905	(5,276)
Employee benefits	65,468	65,468	63,307	2,161
Services and supplies	13,964	13,964	13,286	678
Total Alamo	220,061	220,061	222,498	(2,437)
Meadow Valley:				
Salaries and wages	113,051	113,051	110,410	2,641
Employee benefits	58,866	58,866	58,581	285
Services and supplies	14,800	14,800	10,742	4,058
Total Meadow Valley	186,717	186,717	179,733	6,984
Total judicial	1,235,419	1,347,419	1,282,536	64,883
Health:				
State nurse	42,640	42,640	52,388	(9,748)
Contingency	-	234,000	-	234,000
Total expenditures	$ 4,733,743	$ 5,119,320	$ 4,613,867	$ 505,453

See accompanying notes to required supplementary information.

LINCOLN COUNTY, NEVADA
REQUIRED SUPPLEMENTARY INFORMATION
MAJOR FUND - GENERAL FUND
SCHEDULE OF REVENUES, EXPENDITURES AND CHANGES IN FUND BALANCE
BUDGET (BUDGETARY BASIS) AND ACTUAL (CONTINUED)
Year Ended June 30, 2018

	Original Budget	Final Budget	Actual	Variance With Final Budget Positive (Negative)
Excess (deficiency) of revenues over expenditures	$ (300,914)	$ (686,491)	$ (156,420)	$ 530,071
Other financing sources (uses):				
Operating transfers in	200,000	603,577	603,500	(77)
Operating transfers out	(138,000)	(156,000)	(156,000)	-
Total other financing sources (uses)	62,000	447,577	447,500	(77)
Net change in fund balance	(238,914)	(238,914)	291,080	529,994
Fund balance:				
Beginning of year	570,954	570,954	482,059	(88,895)
End of year	$ 332,040	$ 332,040	$ 773,139	$ 441,099

See accompanying notes to required supplementary information.

LINCOLN COUNTY, NEVADA
REQUIRED SUPPLEMENTARY INFORMATION
MAJOR FUND - ROAD SPECIAL REVENUE FUND
SCHEDULE OF REVENUES, EXPENDITURES AND CHANGES IN FUND BALANCE
IN FUND BALANCE - BUDGET AND ACTUAL
Year Ended June 30, 2018

	Original Budget	Final Budget	Actual	Variance With Final Budget Positive (Negative)
Revenues:				
Intergovernmental:				
Gasoline tax $2.35	$ 1,043,591	$ 1,043,591	$ 1,043,384	$ (207)
Gasoline tax $1.25	600,646	600,646	600,847	201
Gasoline tax $1.75	52,393	52,393	48,152	(4,241)
Optional $0.01 tax	25,444	25,444	23,344	(2,100)
National forest	-	-	21,230	21,230
Total intergovernmental	1,722,074	1,722,074	1,736,957	14,883
Miscellaneous:				
Investment income	800	800	170	(630)
Other	15,000	15,000	-	(15,000)
Total miscellaneous	15,800	15,800	170	(15,630)
Total revenues	1,737,874	1,737,874	1,737,127	(747)
Expenditures:				
Current:				
Public works:				
Salaries and wages	679,844	679,844	659,012	20,832
Employee benefits	303,484	303,484	278,285	25,199
Services and supplies	801,700	801,700	465,294	336,406
Capital outlay	-	-	2,500	(2,500)
Total expenditures	1,785,028	1,785,028	1,405,091	379,937
Excess (deficiency) of revenues over expenditures	(47,154)	(47,154)	332,036	379,190
Other financing sources (uses):				
Operating transfers out	(100,000)	(100,000)	(100,000)	-
Net change in fund balance	(147,154)	(147,154)	232,036	379,190
Fund balance:				
Beginning of year	423,585	423,585	404,804	(18,781)
End of year	$ 276,431	$ 276,431	$ 636,840	$ 360,409

See accompanying notes to required supplementary information.

LINCOLN COUNTY, NEVADA
REQUIRED SUPPLEMENTARY INFORMATION
MAJOR FUND - FEDERAL IN LIEU TAX SPECIAL REVENUE FUND
SCHEDULE OF REVENUES, EXPENDITURES AND CHANGES IN FUND BALANCE
IN FUND BALANCE - BUDGET AND ACTUAL
Year Ended June 30, 2018

	Original Budget	Final Budget	Actual	Variance With Final Budget Positive (Negative)
Revenues:				
Intergovernmental:				
Federal in lieu tax	$ 874,508	$ 874,508	$ 1,804,715	$ 930,207
Grants	-	57,609	57,609	-
Total intergovernmental	874,508	932,117	1,862,324	930,207
Miscellaneous:				
Investment income	5,000	5,000	1,826	(3,174)
Total revenues	879,508	937,117	1,864,150	927,033
Expenditures:				
Current:				
General government:				
Services and supplies	743,821	678,821	416,621	262,200
Capital outlay	145,000	202,609	310,024	(107,415)
Total general government	888,821	881,430	726,645	154,785
Public safety:				
Services and supplies	70,000	70,000	45,046	24,954
Capital outlay	-	-	-	-
Total public safety	70,000	70,000	45,046	24,954
Sanitation:				
Services and supplies	126,000	126,000	-	126,000
Public works:				
Capital outlay	30,000	30,000	-	30,000
Community support:				
Services and supplies	16,957	16,957	16,957	-
Intergovernmental:				
Services and supplies	75,000	75,000	70,484	4,516
Debt service:				
Principal	47,699	47,699	47,699	-
Interest	4,890	4,890	4,877	13
Total debt service	52,589	52,589	52,576	13
Total expenditures	1,259,367	1,251,976	911,708	340,268
Excess (deficiency) of revenues over expenditures	(379,859)	(314,859)	952,442	1,267,301
Other financing sources (uses):				
Operating transfers out	(392,000)	(457,000)	(640,209)	(183,209)
Net change in fund balance	(771,859)	(771,859)	312,233	1,084,092
Fund balance:				
Beginning of year	1,483,477	1,483,477	1,771,559	288,082
End of year	$ 711,618	$ 711,618	$ 2,083,792	$ 1,372,174

See accompanying notes to required supplementary information.

LINCOLN COUNTY, NEVADA
REQUIRED SUPPLEMENTARY INFORMATION
MAJOR FUND - LINCOLN COUNTY WATER DISTRICT
WATER RESOURCES SPECIAL REVENUE FUND
SCHEDULE OF REVENUES, EXPENDITURES AND CHANGES IN FUND BALANCE
IN FUND BALANCE - BUDGET AND ACTUAL
Year Ended June 30, 2018

	Original Budget	Final Budget	Actual	Variance With Final Budget Positive (Negative)
Revenues:				
Miscellaneous:				
Investment income	$ 50,000	$ 50,000	$ (8,297)	$ (58,297)
Expenditures:				
Current:				
General government:				
Services and supplies	-	-	-	-
Excess (deficiency) of revenues over expenditures	50,000	50,000	(8,297)	(58,297)
Other financing sources (uses):				
Operating transfers out:	(100,000)	(100,000)	(100,000)	-
Net change in fund balance	(50,000)	(50,000)	(108,297)	(58,297)
Fund balance:				
Beginning of year	2,919,346	2,919,346	2,841,712	(77,634)
End of year	$ 2,869,346	$ 2,869,346	$ 2,733,415	$ (135,931)

See accompanying notes to required supplementary information.

LINCOLN COUNTY, NEVADA
REQUIRED SUPPLEMENTARY INFORMATION
MAJOR FUND - LINCOLN COUNTY LAND ACT SPECIAL USE - SPECIAL REVENUE FUND
SCHEDULE OF REVENUES, EXPENDITURES AND CHANGES IN FUND BALANCE
IN FUND BALANCE - BUDGET AND ACTUAL
Year Ended June 30, 2018

	Original Budget	Final Budget	Actual	Variance With Final Budget Positive (Negative)
Revenues:				
Miscellaneous:				
Investment income	$ 300	$ 300	$ 1,308	$ 1,008
Rent	30,000	30,000	30,276	276
Total revenues	30,300	30,300	31,584	1,284
Expenditures:				
Current:				
General government:				
Services and supplies	250,000	250,000	-	250,000
Excess (deficiency) of revenues over expenditures	(219,700)	(219,700)	31,584	251,284
Fund balance:				
Beginning of year	3,721,004	3,721,004	3,727,140	6,136
End of year	$ 3,501,304	$ 3,501,304	$ 3,758,724	$ 257,420

See accompanying notes to required supplementary information.

LINCOLN COUNTY, NEVADA
REQUIRED SUPPLEMENTARY INFORMATION
MAJOR FUND - COUNTY GRANT - SPECIAL REVENUE FUND
SCHEDULE OF REVENUES, EXPENDITURES AND CHANGES IN FUND BALANCE
IN FUND BALANCE - BUDGET AND ACTUAL
Year Ended June 30, 2018

	Original Budget	Final Budget	Actual	Variance With Final Budget Positive (Negative)
Revenues:				
Intergovernmental:				
Grants	$ -	$ 2,838,202	$ 2,597,521	$ (240,681)
Miscellaneous:				
Investment income	-	-	116	116
Total revenues	-	2,838,202	2,597,637	(240,565)
Expenditures:				
Current:				
General government	-	448,384	418,792	29,592
Public safety	-	347,712	327,447	20,265
Public works	-	1,270,985	1,268,488	2,497
Welfare	-	140,025	100,949	39,076
Culture and recreation	-	631,096	560,607	70,489
Total expenditures	-	2,838,202	2,676,283	161,919
Excess (deficiency) of revenues over expenditures	-	-	(78,646)	(78,646)
Other financing sources (uses):				
Operating transfers in	-	-	78,762	78,762
Net change in fund balance	-	-	116	116
Fund balance:				
Beginning of year	65,169	65,169	63,026	(2,143)
End of year	$ 65,169	$ 65,169	$ 63,142	$ (2,027)

See accompanying notes to required supplementary information.

LINCOLN COUNTY, NEVADA
REQUIRED SUPPLEMENTARY INFORMATION
RECONCILIATION OF THE GENERAL FUND (BUDGETARY BASIS)
TO THE GENERAL FUND (GAAP BASIS)
SCHEDULE OF REVENUE, EXPENDITURES, AND CHANGES IN FUND BALANCES
For the Year Ended June 30, 2018

	General Fund Budgetary Basis	Internally Reported Funds	Eliminations	General Fund GAAP Basis
Revenues:				
Taxes	$ 2,132,619	$ -	$ -	$ 2,132,619
Licenses and permits	19,872	-	-	19,872
Intergovernmental	1,598,724	-	-	1,598,724
Charges for services	356,962	10,901	-	367,863
Fines and forfeitures	293,668	-	-	293,668
Miscellaneous	55,602	27,832	-	83,434
Total revenues	4,457,447	38,733	-	4,496,180
Expenditures:				
Current:				
General government	1,555,061	42,892	-	1,597,953
Public safety	1,723,882	-	-	1,723,882
Judicial	1,282,536	-	-	1,282,536
Public works	-	82,146	-	82,146
Health	52,388	-	-	52,388
Total expenditures	4,613,867	125,038	-	4,738,905
Excess (deficiency) of revenues over expenditures	(156,420)	(86,305)	-	(242,725)
Other financing sources (uses):				
Operating transfers in	603,500	205,000	(468,500)	340,000
Operating transfers out	(156,000)	(378,500)	468,500	(66,000)
Total other financing sources (uses)	447,500	(173,500)	-	274,000
Net change in fund balance	291,080	(259,805)	-	31,275
Fund balance:				
Beginning of year	482,059	796,214	-	1,278,273
End of year	$ 773,139	$ 536,409	$ -	$ 1,309,548

See accompanying notes to required supplementary information.

LINCOLN COUNTY, NEVADA
REQUIRED SUPPLEMENTARY INFORMATION
SCHEDULE OF CHANGES IN THE COUNTY'S TOTAL OPEB LIABILITY AND RELATED RATIOS
JUNE 30, 2018

	6/30/2018
Total OPEB Liability	
Service cost	$ -
Interest	27,562
Changes of benefit terms	-
Differences between expected and actual experience	-
Changes of assumptions or other inputs	(270,391)
Benefit Payments	(59,983)
Net Change in total OPEB liability	(302,812)
Total OPEB liability - beginning	880,588
Total OPEB liability - ending	$ 577,776
Covered-employee payroll	$ -
Total OPEB liability as a percentage of covered-employee payroll	0.00%

Note: PEBP closed to new County participants as of November 1, 2008; therefore, covered payroll is zero.

Changes of assumptions and other inputs reflect the effects of changes in the discount rate each period. The following are the discount rates used in each period.

6/30/2018	3.13
6/30/2017	2.68

See accompanying notes to required supplementary information.

LINCOLN COUNTY, NEVADA
REQUIRED SUPPLEMENTARY INFORMATION
SCHEDULE OF THE COUNTY'S CONTRIBUTIONS TO THE
PUBLIC EMPLOYEES' RETIREMENT SYSTEM OF THE STATE OF NEVADA
FOR THE FISCAL YEAR ENDED JUNE 30, 2018

Year Ended June 30	Contractually Determined Contributions	Contributions in Relation to the Actuarially Determined Contributions	Contribution Deficiency (Excess)	Covered Employee Payroll	Contributions as a Percentage of Covered Employee Payroll
2014	$ 1,164,559	$ 1,164,559	$ -	$4,098,726	28.41%
2015	1,232,695	1,232,695	-	4,381,264	28.14%
2016	1,321,892	1,321,892	-	4,218,947	31.33%
2017	1,303,882	1,303,882	-	4,687,633	27.82%
2018	647,630	647,630	-	4,770,281	13.58%

Information previous to 2013 is not available.

Beginning with the year-ended 2018, all contributions shown reflect employer-paid contributions only, and employer-paid member contributions are excluded. Actuarially Determined Contributions above are based on actuarially determined contribution rates (employer portion only) from the most recent rate-setting year prior to the year shown, applied to covered payroll for year shown.

See accompanying notes to required supplementary information.

LINCOLN COUNTY, NEVADA
REQUIRED SUPPLEMENTARY INFORMATION
SCHEDULE OF THE COUNTY'S PROPORTIONATE SHARE OF THE NET PENSION LIABILITY
PUBLIC EMPLOYEES' RETIREMENT SYSTEM OF THE STATE OF NEVADA
FOR THE FISCAL YEAR ENDED JUNE 30, 2018

Reporting Year Ended June 30:	County's proportion of the net pension liability	County's proportionate share of the net pension liability	County's covered-employee payroll	County's proportionate share of the net pension liability as a percentage of its covered-employee payroll	Plan fiduciary net position as a percentage of the total pension liability
2015	0.08508%	8,866,756	4,098,726	216.33%	76.31%
2016	0.08864%	10,157,192	4,381,264	231.83%	75.10%
2017	0.08800%	11,842,446	4,218,947	280.70%	72.20%
2018	0.08407%	11,180,767	4,687,633	238.52%	74.40%

Fiscal year 2015 was the first year of implementation, therefore, only four years are shown.

The County's proportionate share of the net pension liability is based upon the measurment taken on June 30th, of the prior year.

See accompanying notes to required supplementary information.

Note 1 – Explanation of Differences between General Fund (Budgetary Basis) and General Fund (GAAP Basis)

The accompanying Reconciliation of the General Fund (Budgetary Basis) to the General Fund (GAAP Basis) presents balances combined for external financial reporting purposes.

With the implementation of GASB Statement 54, *Fund Balance Reporting and Governmental Fund Type Definitions*, the budgetary basis of accounting for the General Fund differs from generally accepted accounting principles (GAAP).

Guidance in GASB Statement 54 changed the definition of Special Revenue Funds for financial reporting purposes. Pursuant to statute, budget comparisons are required using the budget adopted. Six internally reported special revenue funds of the County (Stabilization, Planning, Rachel Jones Memorial Cemetery, Flood Control, Special Projects, Lincoln County Land Act Emergency Disaster, and Lincoln County Water Emergency Disaster) are combined with the General Fund for external reporting purposes to conform with generally accepted accounting principles.

Note 2 – Net Pension Liability

Changes in benefit terms. Legislation passed in the 2015 Legislative session made changes to a number of plan provisions. These changes were effective July 1, 2015, and apply only to members whose effective date of membership is on or after July 1, 2015. Changes to certain survivor benefit provisions were made effective for survivors of members killed in the line of duty or in the course of employment on or after July 1, 2013, for payments on or after July 1, 2015. The July 1, 2015, sunset on the critical labor shortage exception to the reemployment restriction was repealed. There have been no changes in benefit terms since the last valuation.

Changes in assumptions. Based on the June 30, 2016, Actuarial Experience Study, the following assumptions were changed. Previously, these assumptions were as follows:

Net Investment Return:	8.00% (including 3.50% for inflation).	
Consumer Price Index:	Increase of 3.50% per year.	
Salary Increases:	*Inflation:*	3.50% Plus
	Productive pay increases:	0.75% Plus

Note 3 – Other Post-Employment Benefits Liability

Changes in benefit terms. There have been no changes in benefit terms since the last valuation.

Changes in assumptions. Changes of assumptions and other inputs reflect the effects of changes in the discount rate each period.

LINCOLN COUNTY, NEVADA
NONMAJOR GOVERNMENTAL FUNDS
COMBINING BALANCE SHEET
JUNE 30, 2018

	Nonmajor Special Revenue Funds	Nonmajor Capital Projects Funds	Totals
ASSETS			
Pooled cash and investments	$ 7,428,800	$ 1,070,077	$ 8,498,877
Interest receivable	15,549	3,501	19,050
Taxes receivable	19,119	1,668	20,787
Due from other governments	60,569	92	60,661
Due from others	1,679	-	1,679
Prepaid expense	48,000	-	48,000
Interfund receivable	190,000	-	190,000
Total assets	$ 7,763,716	$ 1,075,338	$ 8,839,054
LIABILITIES			
Accounts payable	$ 194,237	$ -	$ 194,237
Accrued payroll and benefits	68,797	-	68,797
Unearned revenue	144,572	-	144,572
Total liabilities	407,606	-	407,606
DEFERRED INFLOWS OF RESOURCES			
Unavailable revenue - property taxes	10,388	1,370	11,758
FUND BALANCE			
Nonspendable	48,000	-	48,000
Restricted for:			
Capital projects	-	1,073,968	1,073,968
Unincorporated towns	218,847	-	218,847
Multi-species conservation	862,881	-	862,881
General government	252,808	-	252,808
Public safety	66,280	-	66,280
Judicial	231,092	-	231,092
Public works	744,430	-	744,430
Health	253	-	253
Welfare	763,905	-	763,905
Culture and recreation	208,268	-	208,268
Community support	225,800	-	225,800
Intergovernmental	1,104	-	1,104
Committed for:			
Land act	132,195	-	132,195
Water	2,834,671	-	2,834,671
Lincoln County Water District	645,958		645,958
General government	100,046	-	100,046
Health	9,453	-	9,453
Unassigned	(269)	-	(269)
Total fund balance	7,345,722	1,073,968	8,419,690
Total liabilities, deferred inflows of resources, and fund balance	$ 7,763,716	$ 1,075,338	$ 8,839,054

LINCOLN COUNTY, NEVADA
NONMAJOR GOVERNMENTAL FUNDS
COMBINING STATEMENT OF REVENUES, EXPENDITURES,
AND CHANGES IN FUND BALANCE
Year Ended June 30, 2018

	Nonmajor Special Revenue Funds	Nonmajor Capital Projects Funds	Totals
Revenues:			
Taxes	$ 819,991	$ 108,877	$ 928,868
Licenses and permits	3,028	-	3,028
Intergovernmental	552,820	311	553,131
Charges for services	982,901	-	982,901
Fines and forfeitures	59,254	-	59,254
Miscellaneous	113,072	(1,431)	111,641
Total revenues	2,531,066	107,757	2,638,823
Expenditures:			
Current:			
General government	1,135,594	-	1,135,594
Public safety	16,344	-	16,344
Judicial	171,395	-	171,395
Public works	118,437	-	118,437
Health	195,366	-	195,366
Welfare	507,436	-	507,436
Culture and recreation	348,408	-	348,408
Community support	243,265	-	243,265
Intergovernmental	25,261	7,637	32,898
Capital outlay	-	248,229	248,229
Debt service:			
Principal	-	68,240	68,240
Interest	-	5,472	5,472
Total expenditures	2,761,506	329,578	3,091,084
Excess (deficiency) of revenues over expenditures	(230,440)	(221,821)	(452,261)
Other financing sources (uses):			
Operating transfers in	265,197	223,817	489,014
Operating transfers out	(130,721)	(107,817)	(238,538)
Sale of capital assets	-	53,744	53,744
Total other financing sources (uses)	134,476	169,744	304,220
Net change in fund balance	(95,964)	(52,077)	(148,041)
Fund balance:			
Beginning of year	7,441,686	1,126,045	8,567,731
End of year	$ 7,345,722	$ 1,073,968	$ 8,419,690

LINCOLN COUNTY, NEVADA
RECONCILIATION OF THE GENERAL FUND (BUDGETARY BASIS)
TO THE GENERAL FUND (GAAP BASIS)
BALANCE SHEET
June 30, 2018

	General Fund Budgetary Basis	Internally Reported Funds	General Fund GAAP Basis
ASSETS			
Pooled cash and investments	$ 683,129	$ 529,054	$ 1,212,183
Interest receivable	3,195	858	4,053
Taxes receivable	32,550	-	32,550
Due from other governments	397,413	-	397,413
Due from others	-	27,652	27,652
Due from other funds	89,535	-	89,535
Total assets	$ 1,205,822	$ 557,564	$ 1,763,386
LIABILITIES			
Accounts payable	$ 194,918	$ 19,087	$ 214,005
Accrued payroll and benefits	211,062	2,068	213,130
Total liabilities	405,980	21,155	427,135
DEFERRED INFLOWS OF RESOURCES			
Unavailable revenue - property taxes	26,703	-	26,703
FUND BALANCE			
Restricted for:			
Stabilization	-	130,904	130,904
Rachel Jones Cemetery	-	827	827
General government	-	208,567	208,567
Committed for:			
Planning	-	27,121	27,121
Flood Control	-	40,825	40,825
Land Act	-	64,723	64,723
Water	-	63,442	63,442
Assigned for:			
Subsequent year	598,226	-	598,226
Unassigned	174,913	-	174,913
Total fund balance	773,139	536,409	1,309,548
Total liabilities, deferred inflows of resources, and fund balance	$ 1,205,822	$ 557,564	$ 1,763,386

LINCOLN COUNTY, NEVADA
MAJOR FUND - GENERAL FUND (BUDGETARY BASIS)
COMPARATIVE BALANCE SHEETS
June 30, 2018 and 2017

	2018	2017
ASSETS		
Pooled cash and investments	$ 683,129	$ 512,750
Interest receivable	3,195	746
Taxes receivable	32,550	27,407
Due from other governments	397,413	295,486
Due from others	-	500
Due from other funds	89,535	-
Total assets	$ 1,205,822	$ 836,889
LIABILITIES		
Accounts payable	$ 194,918	$ 175,557
Accrued payroll and benefits	211,062	155,863
Total liabilities	405,980	331,420
DEFERRED INFLOWS OF RESOURCES		
Unavailable revenue - property taxes	26,703	23,410
FUND BALANCE		
Assigned for subsequent year	598,226	482,059
Unassigned	174,913	-
Total fund balance	773,139	482,059
Total liabilities, deferred inflows of resources, and fund balance	$ 1,205,822	$ 836,889

LINCOLN COUNTY, NEVADA
MAJOR FUND - GENERAL FUND
SCHEDULE OF REVENUES, EXPENDITURES, AND CHANGES IN FUND BALANCE
BUDGET (BUDGETARY BASIS) AND ACTUAL
Year Ended June 30, 2018
(With Comparative Actual Amounts for Year Ended June 30, 2017)

	2018 Budget	2018 Actual	Variance - Positive (Negative)	2017 Actual
Revenues:				
Taxes	$ 2,180,803	$ 2,132,619	$ (48,184)	$ 2,184,932
Licenses and permits	18,150	19,872	1,722	22,361
Intergovernmental	1,441,376	1,598,724	157,348	1,547,701
Charges for services	373,500	356,962	(16,538)	366,827
Fines and forfeitures	360,000	293,668	(66,332)	283,706
Miscellaneous	59,000	55,602	(3,398)	42,064
Total revenues	4,432,829	4,457,447	24,618	4,447,591
Expenditures:				
Current:				
General government	1,706,221	1,555,061	151,160	1,489,087
Public safety	1,789,040	1,723,882	65,158	1,630,120
Judicial	1,347,419	1,282,536	64,883	1,170,177
Health	42,640	52,388	(9,748)	42,784
Contingency	234,000	-	234,000	-
Total expenditures	5,119,320	4,613,867	505,453	4,332,168
Excess (deficiency) of revenues over expenditures	(686,491)	(156,420)	530,071	115,423
Other financing sources (uses):				
Operating transfers in	603,577	603,500	(77)	40,000
Operating transfers out	(156,000)	(156,000)	-	(242,000)
Total other financing sources (uses)	447,577	447,500	(77)	(202,000)
Net change in fund balance	(238,914)	291,080	529,994	(86,577)
Fund balance:				
Beginning of year	570,954	482,059	(88,895)	568,636
End of year	$ 332,040	$ 773,139	$ 441,099	$ 482,059

LINCOLN COUNTY, NEVADA
MAJOR FUND - GENERAL FUND
SCHEDULE OF REVENUES COMPARED TO BUDGET (BUDGETARY BASIS)
Year Ended June 30, 2018
(With Comparative Actual Amounts for Year Ended June 30, 2017)

	2018 Budget	2018 Actual	Variance - Positive (Negative)	2017 Actual
Revenues:				
Taxes:				
Property taxes	$ 2,180,803	$ 2,132,619	$ (48,184)	$ 2,184,932
Licenses and permits:				
Business licenses	7,200	10,325	3,125	9,870
Liquor licenses	5,100	6,047	947	7,425
Gaming licenses	5,200	2,912	(2,288)	4,688
Marriage licenses	650	588	(62)	378
Total licenses and permits	18,150	19,872	1,722	22,361
Intergovernmental:				
Gaming tax	141,000	134,621	(6,379)	140,389
Private car line tax	4,100	3,945	(155)	-
Water District	7,000	21,597	14,597	38,353
Consolidated tax	1,260,971	1,304,072	43,101	1,289,231
Grants	28,305	43,699	15,394	76,589
Marijuana fees	-	88,235	88,235	-
Fish and wildlife	-	2,555	2,555	3,139
Total intergovernmental	1,441,376	1,598,724	157,348	1,547,701
Charges for services:				
Clerk fees	6,000	11,254	5,254	11,641
Recorder fees	50,000	64,079	14,079	54,813
Assessor commissions	65,500	30,492	(35,008)	31,329
Sheriff fees	2,500	7,402	4,902	4,835
Tax penalties and costs	45,000	50,533	5,533	77,007
District attorney fees	500	156	(344)	171
Civil fees	-	3,096	3,096	3,122
Security contract	122,000	122,000	-	112,000
Caliente police contract	75,000	64,800	(10,200)	64,909
Caliente court contract	7,000	3,150	(3,850)	7,000
Total charges for services	373,500	356,962	(16,538)	366,827
Fines and forfeitures:				
Fines and forfeitures	360,000	293,668	(66,332)	283,706
Miscellaneous:				
Investment income	10,000	661	(9,339)	1,342
Rent, sales, refunds	40,000	46,812	6,812	35,521
Solid waste	4,000	-	(4,000)	283
Other	5,000	8,129	3,129	4,918
Total miscellaneous	59,000	55,602	(3,398)	42,064
Total revenues	$ 4,432,829	$ 4,457,447	$ 24,618	$ 4,447,591

LINCOLN COUNTY, NEVADA
MAJOR FUND - GENERAL FUND
SCHEDULE OF EXPENDITURES COMPARED TO BUDGET (BUDGETARY BASIS)
Year Ended June 30, 2018
(With Comparative Actual Amounts for Year Ended June 30, 2017)

	2018 Budget	2018 Actual	Variance - Positive (Negative)	2017 Actual
Expenditures:				
Current:				
General government:				
County commissioners:				
Salaries and wages	$ 132,721	$ 132,382	$ 339	$ 112,123
Employee benefits	81,948	89,735	(7,787)	65,246
Services and supplies	16,500	15,067	1,433	11,868
Total county commissioners	231,169	237,184	(6,015)	189,237
Executive officer:				
Salaries and wages	21,008	20,523	485	10,115
Employee benefits	11,755	11,574	181	5,606
Services and supplies	900	797	103	619
Total executive officer	33,663	32,894	769	16,340
Clerk:				
Salaries and wages	123,116	115,479	7,637	107,385
Employee benefits	50,754	50,139	615	47,103
Services and supplies	45,600	14,424	31,176	20,117
Total clerk	219,470	180,042	39,428	174,605
Treasurer:				
Salaries and wages	111,716	109,779	1,937	104,024
Employee benefits	48,681	48,253	428	46,469
Services and supplies	11,830	10,878	952	13,674
Total treasurer	172,227	168,910	3,317	164,167
Auditor and recorder:				
Salaries and wages	157,924	155,078	2,846	150,376
Employee benefits	67,574	66,821	753	64,211
Services and supplies	16,467	13,796	2,671	14,852
Total auditor and recorder	241,965	235,695	6,270	229,439
Assessor:				
Salaries and wages	144,284	142,348	1,936	140,914
Employee benefits	69,726	69,380	346	68,429
Services and supplies	23,000	12,396	10,604	14,524
Total assessor	237,010	224,124	12,886	223,867
Grant administrator:				
Salaries and wages	54,747	54,747	-	62,495
Employee benefits	19,469	19,478	(9)	24,401
Services and supplies	8,200	7,670	530	6,858
Total grant administrator	$ 82,416	$ 81,895	$ 521	$ 93,754

LINCOLN COUNTY, NEVADA
MAJOR FUND - GENERAL FUND
SCHEDULE OF EXPENDITURES COMPARED TO BUDGET (BUDGETARY BASIS)
Year Ended June 30, 2018
(With Comparative Actual Amounts for Year Ended June 30, 2017)

	2018 Budget	2018 Actual	Variance - Positive (Negative)	2017 Actual
General government (Continued):				
Business license:				
Salaries and wages	$ 5,105	$ 7,361	$ (2,256)	$ 5,921
Employee benefits	1,778	1,656	122	1,485
Services and supplies	1,500	1,266	234	714
Total business license	8,383	10,283	(1,900)	8,120
Buildings and grounds:				
Pioche:				
Salaries and wages	30,076	44,342	(14,266)	41,911
Employee benefits	8,439	8,808	(369)	9,553
Services and supplies	148,825	100,263	48,562	97,084
Total Pioche	187,340	153,413	33,927	148,548
Alamo:				
Salaries and wages	8,109	8,316	(207)	8,118
Employee benefits	854	884	(30)	863
Services and supplies	15,033	14,131	902	14,519
Total Alamo	23,996	23,331	665	23,500
Total buildings and grounds	211,336	176,744	34,592	172,048
Other general expenses:				
Employee benefits	56,000	51,229	4,771	67,616
Services and supplies	212,582	156,061	56,521	149,894
Total other general expenses	268,582	207,290	61,292	217,510
Total general government	$ 1,706,221	$ 1,555,061	$ 151,160	$ 1,489,087

LINCOLN COUNTY, NEVADA
MAJOR FUND - GENERAL FUND
SCHEDULE OF EXPENDITURES COMPARED TO BUDGET (BUDGETARY BASIS)
Year Ended June 30, 2018
(With Comparative Actual Amounts for Year Ended June 30, 2017)

	2018 Budget	2018 Actual	Variance - Positive (Negative)	2017 Actual
Public safety:				
Sheriff:				
Salaries and wages	$ 883,197	$ 830,042	$ 53,155	$ 827,894
Employee benefits	521,940	528,502	(6,562)	467,064
Services and supplies	194,269	170,678	23,591	155,130
Capital outlay	-	22,353	(22,353)	8,698
Total sheriff	1,599,406	1,551,575	47,831	1,458,786
Emergency management:				
Salaries and wages	34,050	35,148	(1,098)	32,677
Employee benefits	10,800	9,952	848	10,483
Services and supplies	5,100	-	5,100	2,396
Total emergency management	49,950	45,100	4,850	45,556
Caliente contract:				
Salaries and wages	87,306	78,323	8,983	76,023
Employee benefits	47,778	47,479	299	47,714
Services and supplies	4,600	1,405	3,195	2,041
Total Caliente contract	139,684	127,207	12,477	125,778
Total public safety	1,789,040	1,723,882	65,158	1,630,120
Judicial:				
District court:				
Salaries and wages	118,245	93,746	24,499	95,320
Services and supplies	292,300	292,195	105	193,552
Total district court	410,545	385,941	24,604	288,872
District attorney:				
Salaries and wages	243,770	240,539	3,231	229,890
Employee benefits	100,796	96,683	4,113	93,619
Services and supplies	50,000	43,967	6,033	22,676
Capital outlay	1,600	-	1,600	-
Total district attorney	$ 396,166	$ 381,189	$ 14,977	$ 346,185

LINCOLN COUNTY, NEVADA
MAJOR FUND - GENERAL FUND
SCHEDULE OF EXPENDITURES COMPARED TO BUDGET (BUDGETARY BASIS)
Year Ended June 30, 2018
(With Comparative Actual Amounts for Year Ended June 30, 2017)

	2018		Variance - Positive	2017
	Budget	Actual	(Negative)	Actual
Judicial (Continued):				
Law library	$ 12,100	$ 7,168	$ 4,932	$ 6,273
Public guardian	4,750	1,608	3,142	3,217
Public administrator	3,250	19	3,231	6,000
Juvenile officers:				
Salaries and wages	60,191	60,963	(772)	61,183
Employee benefits	32,639	31,404	1,235	32,009
Services and supplies	21,000	12,013	8,987	27,600
Total juvenile officers	113,830	104,380	9,450	120,792
Alamo:				
Salaries and wages	140,629	145,905	(5,276)	140,854
Employee benefits	65,468	63,307	2,161	64,550
Services and supplies	13,964	13,286	678	12,946
Total Alamo	220,061	222,498	(2,437)	218,350
Meadow Valley:				
Salaries and wages	113,051	110,410	2,641	108,358
Employee benefits	58,866	58,581	285	58,390
Services and supplies	14,800	10,742	4,058	13,740
Total Meadow Valley	186,717	179,733	6,984	180,488
Total judicial	1,347,419	1,282,536	64,883	1,170,177
Health:				
State nurse	42,640	52,388	(9,748)	42,784
Contingency	234,000	-	234,000	-
Total expenditures	$ 5,119,320	$ 4,613,867	$ 505,453	$ 4,332,168

LINCOLN COUNTY, NEVADA
MAJOR FUND - ROAD SPECIAL REVENUE FUND
COMPARATIVE BALANCE SHEETS
June 30, 2018 and 2017

	2018	2017
ASSETS		
Pooled cash and investments	$ 493,759	$ 518,727
Interest receivable	821	1,200
Due from other governments	296,386	295,207
Total assets	$ 790,966	$ 815,134
LIABILITIES		
Accounts payable	$ 109,070	$ 369,878
Accrued payroll and benefits	45,056	40,452
Total liabilities	154,126	410,330
FUND BALANCE		
Restricted	636,840	404,804
Total liabilities and fund balance	$ 790,966	$ 815,134

LINCOLN COUNTY, NEVADA
MAJOR FUND - ROAD SPECIAL REVENUE FUND
SCHEDULE OF REVENUES, EXPENDITURES, AND CHANGES IN FUND BALANCE - BUDGET (GAAP BASIS) AND ACTUAL
Year Ended June 30, 2018
(With Comparative Actual Amounts for Year Ended June 30, 2017)

	2018 Budget	2018 Actual	Variance - Positive (Negative)	2017 Actual
Revenues:				
Intergovernmental:				
Gasoline tax $2.35	$ 1,043,591	$ 1,043,384	$ (207)	$ 1,026,272
Gasoline tax $1.25	600,646	600,847	201	591,744
Gasoline tax $1.75	52,393	48,152	(4,241)	48,609
Optional $0.01 tax	25,444	23,344	(2,100)	23,418
National forest	-	21,230	21,230	406
Total intergovernmental	1,722,074	1,736,957	14,883	1,690,449
Miscellaneous:				
Investment income	800	170	(630)	918
Other	15,000	-	(15,000)	10,595
Total miscellaneous	15,800	170	(15,630)	11,513
Total revenues	1,737,874	1,737,127	(747)	1,701,962
Expenditures:				
Current:				
Public works:				
Highways and streets:				
Salaries and wages	679,844	659,012	20,832	631,936
Employee benefits	303,484	278,285	25,199	277,176
Services and supplies	801,700	465,294	336,406	434,003
Capital outlay	-	2,500	(2,500)	497,492
Total public works	1,785,028	1,405,091	379,937	1,840,607
Debt service:				
Principal	-	-	-	99,639
Interest	-	-	-	3,686
Total debt service	-	-	-	103,325
Total expenditures	1,785,028	1,405,091	379,937	1,943,932
Excess (deficiency) of revenues over expenditures	(47,154)	332,036	379,190	(241,970)
Other financing sources (uses):				
Operating transfers in	-	-	-	49,505
Operating transfers out	(100,000)	(100,000)	-	(100,000)
Total other financing sources	(100,000)	(100,000)	-	(50,495)
Net change in fund balance	(147,154)	232,036	379,190	(292,465)
Fund balance:				
Beginning of year	423,585	404,804	(18,781)	697,269
End of year	$ 276,431	$ 636,840	$ 360,409	$ 404,804

LINCOLN COUNTY, NEVADA
MAJOR FUND - FEDERAL IN LIEU TAX SPECIAL REVENUE FUND
COMPARATIVE BALANCE SHEETS
June 30, 2018 and 2017

	2018	2017
ASSETS		
Pooled cash and investments	$ 2,182,955	$ 2,698,802
Interest receivable	8,816	6,325
Due from other governments	57,609	-
Total assets	$ 2,249,380	$ 2,705,127
LIABILITIES		
Accounts payable	$ 165,588	$ 40,379
Unearned revenue	-	893,189
Total liabilities	165,588	933,568
FUND BALANCE		
Committed	2,083,792	1,771,559
Total liabilities and fund balance	$ 2,249,380	$ 2,705,127

LINCOLN COUNTY, NEVADA
MAJOR FUND - FEDERAL IN LIEU TAX SPECIAL REVENUE FUND
SCHEDULE OF REVENUES, EXPENDITURES, AND CHANGES
IN FUND BALANCE - BUDGET (GAAP BASIS) AND ACTUAL
Year Ended June 30, 2018
(With Comparative Actual Amounts for Year Ended June 30, 2017)

	2018		Variance - Positive	2017
	Budget	Actual	(Negative)	Actual
Revenues:				
Intergovernmental:				
Federal in lieu tax	$ 874,508	$ 1,804,715	$ 930,207	$ 874,508
Grants	57,609	57,609	-	-
Total intergovernmental	932,117	1,862,324	930,207	874,508
Miscellaneous:				
Investment income	5,000	1,826	(3,174)	4,337
Total revenues	937,117	1,864,150	927,033	878,845
Expenditures:				
Current:				
General government:				
Service and supplies	678,821	416,621	262,200	457,914
Capital outlay	202,609	310,024	(107,415)	16,719
Total general government	881,430	726,645	154,785	474,633
Public safety:				
Service and supplies	70,000	45,046	24,954	4,200
Sanitation:				
Capital outlay	126,000	-	126,000	-
Public works:				
Capital outlay	30,000	-	30,000	23,983
Community support:				
Service and supplies	16,957	16,957	-	16,957
Intergovernmental:				
Service and supplies	75,000	70,484	4,516	77,505
Debt service:				
Principal	47,699	47,699	-	45,377
Interest	4,890	4,877	13	7,199
Total debt service	52,589	52,576	13	52,576
Total expenditures	$ 1,251,976	$ 911,708	$ 340,268	$ 649,854

LINCOLN COUNTY, NEVADA
MAJOR FUND - FEDERAL IN LIEU TAX SPECIAL REVENUE FUND
SCHEDULE OF REVENUES, EXPENDITURES, AND CHANGES
IN FUND BALANCE - BUDGET (GAAP BASIS) AND ACTUAL
Year Ended June 30, 2018
(With Comparative Actual Amounts for Year Ended June 30, 2017)

	2018		Variance - Positive	2017
	Budget	Actual	(Negative)	Actual
Excess (deficiency) of revenues over expenditures	$ (314,859)	$ 952,442	$ 1,267,301	$ 228,991
Other financing sources (uses):				
Operating transfers out	(457,000)	(640,209)	(183,209)	(236,466)
Net change in fund balance	(771,859)	312,233	1,084,092	(7,475)
Fund balance:				
Beginning of year	1,483,477	1,771,559	288,082	1,779,034
End of year	$ 711,618	$ 2,083,792	$ 1,372,174	$ 1,771,559

LINCOLN COUNTY, NEVADA
MAJOR FUND - LINCOLN COUNTY WATER DISTRICT
WATER RESOURCES SPECIAL REVENUE FUND
COMPARATIVE BALANCE SHEETS
June 30, 2018 and 2017

	2018	2017
ASSETS		
Pooled cash and investments	$ 2,724,053	$ 2,832,741
Interest receivable	9,362	8,971
Total assets	$ 2,733,415	$ 2,841,712
LIABILITIES		
Accounts payable	$ -	$ -
FUND BALANCE		
Committed	2,733,415	2,841,712
Total liabilities and fund balance	$ 2,733,415	$ 2,841,712

LINCOLN COUNTY, NEVADA
MAJOR FUND - LINCOLN COUNTY WATER DISTRICT
WATER RESOURCES SPECIAL REVENUE FUND
SCHEDULE OF REVENUES, EXPENDITURES, AND CHANGES IN FUND BALANCE - BUDGET (GAAP BASIS) AND ACTUAL
Year Ended June 30, 2018
(With Comparative Actual Amounts for Year Ended June 30, 2017)

	2018 Budget	2018 Actual	Variance - Positive (Negative)	2017 Actual
Revenues:				
Miscellaneous:				
Investment income	$ 50,000	$ (8,297)	$ (58,297)	$ (27,634)
Expenditures:				
Current:				
General government:				
Services and supplies	-	-	-	-
Excess (deficiency) of revenues over expenditures	50,000	(8,297)	(58,297)	(27,634)
Other financing sources (uses):				
Operating transfers out	(100,000)	(100,000)	-	-
Net change in fund balance	(50,000)	(108,297)	(58,297)	(27,634)
Fund balance:				
Beginning of year	2,919,346	2,841,712	(77,634)	2,869,346
End of year	$ 2,869,346	$ 2,733,415	$ (135,931)	$ 2,841,712

LINCOLN COUNTY, NEVADA
MAJOR FUND - LINCOLN COUNTY LAND ACT - SPECIAL USE SPECIAL REVENUE FUND
COMPARATIVE BALANCE SHEETS
June 30, 2018 and 2017

	2018	2017
ASSETS		
Pooled cash and investments	$ 3,562,405	$ 3,518,883
Interest receivable	6,319	8,257
Interfund receivable	190,000	200,000
Total assets	$ 3,758,724	$ 3,727,140
LIABILITIES		
Accounts payable	$ -	$ -
FUND BALANCE		
Committed	3,758,724	3,727,140
Total liabilities and fund balance	$ 3,758,724	$ 3,727,140

LINCOLN COUNTY, NEVADA
MAJOR FUND - LINCOLN COUNTY LAND ACT - SPECIAL USE SPECIAL REVENUE FUND
SCHEDULE OF REVENUES, EXPENDITURES, AND CHANGES
IN FUND BALANCE - BUDGET (GAAP BASIS) AND ACTUAL
Year Ended June 30, 2018
(With Comparative Actual Amounts for Year Ended June 30, 2017)

	2018 Budget	2018 Actual	Variance - Positive (Negative)	2017 Actual
Revenues:				
Miscellaneous:				
Investment income	$ 300	$ 1,308	$ 1,008	$ 6,160
Rent	30,000	30,276	276	30,276
Total miscellaneous	30,300	31,584	1,284	36,436
Expenditures:				
Current:				
General government:				
Service and supplies	250,000	-	250,000	-
Excess (deficiency) of revenues over expenditures	(219,700)	31,584	251,284	36,436
Fund balance:				
Beginning of year	3,721,004	3,727,140	6,136	$ 3,690,704
End of year	$ 3,501,304	$ 3,758,724	$ 257,420	$ 3,727,140

LINCOLN COUNTY, NEVADA
MAJOR FUND - COUNTY GRANT SPECIAL REVENUE FUND
COMPARATIVE BALANCE SHEETS
June 30, 2018 and 2017

	2018	2017
ASSETS		
Pooled cash and investments	$ 102,369	$ 89,926
Interest receivable	561	213
Due from other governments	479,664	147,911
Due from others	-	30,152
Total assets	$ 582,594	$ 268,202
LIABILITIES		
Accounts payable	$ 338,719	$ 17,088
Accrued payroll and benefits	14,813	13,411
Unearned revenue	165,920	174,677
Total liabilities	519,452	205,176
FUND BALANCE		
Committed	63,142	63,026
Total liabilities and fund balance	$ 582,594	$ 268,202

LINCOLN COUNTY, NEVADA
MAJOR FUND - COUNTY GRANT SPECIAL REVENUE FUND
SCHEDULE OF REVENUES, EXPENDITURES, AND CHANGES IN FUND BALANCE - BUDGET (GAAP BASIS) AND ACTUAL
Year Ended June 30, 2018
(With Comparative Actual Amounts for Year Ended June 30, 2017)

	2018		Variance - Positive	2017
	Budget	Actual	(Negative)	Actual
Revenues:				
Intergovernmental:				
Grants	$ 2,838,202	$ 2,597,521	$ (240,681)	$ 1,260,950
Miscellaneous:				
Investment income	-	116	116	(2,143)
Total revenues	2,838,202	2,597,637	(240,565)	1,258,807
Expenditures:				
Current:				
General government	448,384	418,792	29,592	347,467
Public safety	347,712	327,447	20,265	282,504
Public works	1,270,985	1,268,488	2,497	18,392
Welfare	140,025	100,949	39,076	95,727
Culture and recreation	631,096	560,607	70,489	29,468
Intergovernmental	-	-	-	490,433
Total expenditures	2,838,202	2,676,283	161,919	1,263,991
Excess (deficiency) of revenues over expenditures	-	(78,646)	(78,646)	(5,184)
Other financing sources (uses):				
Operating transfers in	-	78,762	78,762	3,041
Net change in fund balance	-	116	116	(2,143)
Fund balance:				
Beginning of year	65,169	63,026	(2,143)	65,169
End of year	$ 65,169	$ 63,142	$ (2,027)	$ 63,026

LINCOLN COUNTY, NEVADA
MAJOR FUND - DETENTION CENTER ENTERPRISE FUND
STATEMENT OF NET POSITION
JUNE 30, 2018 and 2017

	2018	2017
ASSETS		
Current assets:		
Pooled cash and investments	$ -	$ 60,134
Accounts receivable	318,676	185,589
Total current assets	318,676	245,723
Capital assets:		
Property, plant and equipment (net of depreciation)	876,813	898,411
Total assets	1,195,489	1,144,134
DEFERRED OUTFLOWS OF RESOURCES		
Deferred pension charge	427,920	710,502
LIABILITIES		
Current liabilities:		
Accounts payable	25,541	49,043
Accrued payroll and benefits	123,811	69,454
Due to other funds	89,535	-
Accrued compensated absences	120,471	128,443
Total current liabilities	359,358	246,940
Non-current liabilities:		
Accrued compensated absences	72,283	67,270
Net pension liability	3,236,339	3,409,932
Total non-current liabilities	3,308,622	3,477,202
Total liabilities	3,667,980	3,724,142
DEFERRED INFLOWS OF RESOURCES		
Deferred pension charge	315,194	260,416
NET POSITION		
Invested in capital assets, net of related debt	876,813	898,411
Unrestricted	(3,236,578)	(3,028,333)
Total net position	$ (2,359,765)	$ (2,129,922)

LINCOLN COUNTY, NEVADA
MAJOR FUND - DETENTION CENTER ENTERPRISE FUND
SCHEDULE OF REVENUES, EXPENSES, AND CHANGES IN NET POSITION -
BUDGET (GAAP BASIS) AND ACTUAL
Year Ended June 30, 2018
(With Comparative Actual Amounts for Year Ended June 30, 2017)

	2018 Budget	2018 Actual	Variance - Positive (Negative)	2017 Actual
Revenues:				
Charges for services:				
Inmate fees	$ 1,779,375	$ 1,875,382	$ 96,007	$ 934,609
Operating expenses:				
Public safety:				
Salaries and wages	982,775	1,002,794	(20,019)	1,086,461
Employee benefits	546,200	600,602	(54,402)	666,874
Services and supplies	258,500	345,908	(87,408)	262,662
Depreciation	65,000	43,418	21,582	47,519
Total operating expenses	1,852,475	1,992,722	(140,247)	2,063,516
Operating income (loss)	(73,100)	(117,340)	(44,240)	(1,128,907)
Non-operating revenues (expenses):				
Transfer in	-	21,820	21,820	-
Changes in net position	$ (73,100)	(95,520)	$ (22,420)	(1,128,907)
Net position:				
Beginning of year		(2,129,922)		(1,001,015)
Restatement per GASB 75		(134,323)		-
Beginning balance as restated		(2,264,245)		(1,001,015)
End of year		$ (2,359,765)		$ (2,129,922)

LINCOLN COUNTY, NEVADA
MAJOR FUND - DETENTION CENTER ENTERPRISE FUND
COMPARATIVE STATEMENT OF CASH FLOWS
June 30, 2018 and 2017

	2018	2017
Cash flows from operating activities:		
Cash received from customers	$ 1,742,295	$ 1,165,270
Cash paid for services and supplies	(369,410)	(234,002)
Cash paid for salaries and benefits	(1,522,554)	(1,630,354)
Net cash provided (used) by operating activities	(149,669)	(699,086)
Cash flows from noncapital financing activities:		
Due to other funds	89,535	-
Operating transfers in	21,820	-
Net cash provided (used) by noncapital financing activities	111,355	-
Cash flows from capital and related financing activities:		
Purchases of capital assets	(21,820)	(44,669)
Net change in cash and cash equivalents	(60,134)	(743,755)
Cash:		
Beginning of year	60,134	803,889
End of year	$ -	$ 60,134
Reconciliation of operating income (loss) to net cash provided (used) by operating activities:		
Operating income (loss)	$ (117,340)	$ (1,128,907)
Adjustments to reconcile operating income (loss) to net cash provided (used) by operating activities:		
Depreciation expense	43,418	47,519
(Increase) decrease in accounts receivables	(133,087)	230,661
Increase (decrease) in accounts payable	(23,502)	28,660
Increase (decrease) in accrued payroll and benefits	54,357	(5,640)
Increase (decrease) in compensated absences	(2,959)	33,376
Increase (decrease) in net pension liability	(173,593)	464,475
Increase (decrease) in net pension expense	203,037	(369,230)
Total adjustments	(32,329)	429,821
Net cash provided (used) by operating activities	$ (149,669)	$ (699,086)

LINCOLN COUNTY, NEVADA
MAJOR PIOCHE PUBLIC UTILITY ELECTRIC ENTERPRISE FUND
COMPARATIVE STATEMENT OF NET POSITION
June 30, 2018 and 2017

	2018	2017
ASSETS		
Current assets:		
Pooled cash and investments	$ 295,950	$ 208,182
Accounts receivable	49,744	60,760
Interest receivable	165	107
Total current assets	345,859	269,049
Capital assets:		
Land	2,000	2,000
Property, plant and equipment (net of depreciation)	174,285	196,133
Total capital assets	176,285	198,133
Total assets	522,144	467,182
DEFERRED OUTFLOWS OF RESOURCES		
Deferred pension charge	21,064	30,866
Deferred OPEB	1,762	-
Total deferred outflows of resources	22,826	30,866
LIABILITIES		
Current liabilities:		
Accounts payable	43,708	50,356
Accrued payroll and benefits	5,490	5,047
Customer deposits	6,610	4,330
Accrued compensated absences	7,014	7,248
Total current liabilities	62,822	66,981
Non-current liabilities:		
Accrued compensated absences	4,347	4,633
Net pension liability	131,611	138,607
OPEB liability	30,930	-
Total non-current liabilities	166,888	143,240
Total liabilities	229,710	210,221
DEFERRED INFLOWS OF RESOURCES		
Deferred pension charge	15,302	10,125
NET POSITION		
Invested in capital assets, net of related debt	176,285	198,133
Unrestricted	123,673	79,569
Total net position	$ 299,958	$ 277,702

LINCOLN COUNTY, NEVADA
MAJOR PIOCHE PUBLIC UTILITY ELECTRIC ENTERPRISE FUND
SCHEDULE OF REVENUES, EXPENSES, AND CHANGES IN NET POSITION - BUDGET (GAAP BASIS) AND ACTUAL
Year Ended June 30, 2018
(With Comparative Actual Amounts for Year Ended June 30, 2017)

	2018 Budget	2018 Actual	Variance-Positive (Negative)	2017 Actual
Operating revenues:				
Electricity	$ 702,000	$ 693,380	$ (8,620)	$ 675,462
Operating expenses:				
Electricity:				
Salaries and wages	119,025	65,173	53,852	90,452
Employee benefits	42,875	32,421	10,454	41,781
Services and supplies	568,801	587,871	(19,070)	580,877
Depreciation	25,000	21,848	3,152	36,948
Total operating expenses	755,701	707,313	48,388	750,058
Operating income (loss)	(53,701)	(13,933)	39,768	(74,596)
Non-operating revenues (expenses):				
Investment income	50	34	(16)	(118)
Electricity capital fees	60,000	57,123	(2,877)	61,899
Electricity custom fees	5,000	14,478	9,478	7,182
Total non-operating revenues (expenses)	65,050	71,635	6,585	68,963
Change in net position	$ 11,349	57,702	$ 46,353	(5,633)
Net Position:				
Beginning of year		277,702		283,335
Restatement per GASB 75		(35,446)		-
Beginning balance as restated		242,256		283,335
End of year		$ 299,958		$ 277,702

LINCOLN COUNTY, NEVADA
MAJOR PIOCHE PUBLIC UTILITY ELECTRIC ENTERPRISE FUND
COMPARATIVE STATEMENT OF CASH FLOWS
June 30, 2018 and 2017

	2018	2017
Cash flows from operating activities:		
Cash received from customers	$ 706,676	$ 665,534
Cash paid for services and supplies	(594,519)	(568,767)
Cash paid for salaries and benefits	(95,966)	(130,065)
Net cash provided (used) by operating activities	16,191	(33,298)
Cash flows from capital and related financing activities:		
Purchases of capital assets	-	(41,521)
Capital fees	57,123	61,899
Custom fees	14,478	7,182
Net cash provided (used) by capital and related financing activities	71,601	27,560
Cash flows from investing activities:		
Investment income	(24)	(141)
Net change in cash and cash equivalents	87,768	(5,879)
Cash:		
Beginning of year	208,182	214,061
End of year	$ 295,950	$ 208,182
Reconciliation of operating income (loss) to net cash provided (used) by operating activities:		
Operating income (loss)	$ (13,933)	$ (74,596)
Adjustments to reconcile operating income (loss) to net cash provided (used) by operating activities:		
Depreciation expense	21,848	36,948
(Increase) decrease in accounts receivable	11,016	(11,768)
Increase (decrease) in accounts payable	(6,648)	12,110
Increase (decrease) in accrued payroll and benefits	443	(165)
Increase (decrease) in compensated absences	(520)	(135)
Increase (decrease) in net pension liability	(6,996)	18,057
Increase (decrease) in net pension expense	8,136	(15,589)
Increase (decrease) in OPEB liability	30,930	-
Increase (decrease) in OPEB pension expense	(30,365)	-
Increase (decrease) in customer deposits	2,280	1,840
Total adjustments	30,124	41,298
Net cash provided (used) by operating activities	$ 16,191	$ (33,298)

LINCOLN COUNTY, NEVADA
MAJOR SOLID WASTE ENTERPRISE FUND
STATEMENT OF NET POSITION
June 30, 2018

	2018	2017
ASSETS		
Current assets:		
Pooled cash and investments	$ 446,861	$ 362,904
Accounts receivable	144,690	284
Interest receivable	72	47
Restricted assets:		
Pooled cash and investments	40,005	20,015
Capital assets:		
Land	200,000	200,000
Property and equipment (net of depreciation)	405,108	240,636
Total assets	1,236,736	823,886
DEFERRED OUTFLOWS OF RESOURCES		
Deferred pension charge	31,966	42,216
LIABILITIES		
Current liabilities:		
Accounts payable	17,397	14,602
Accrued payroll and benefits	15,410	14,366
Accrued compensated absences	11,432	-
Interfund payable	20,000	20,000
Total current liabilities	64,239	48,968
Non-current liabilities:		
Landfill closure and postclosure costs	40,000	20,000
Interfund payable	360,000	380,000
Accrued compensated absences	7,621	-
Net pension liability	472	10,736
Total non-current liabilities	408,093	410,736
Total liabilities	472,332	459,704
DEFERRED INFLOWS OF RESOURCES		
Deferred pension charge	18,877	15,363
NET POSITION		
Invested in capital assets, net of related debt	605,108	440,636
Unrestricted	172,385	(49,601)
Total net position	$ 777,493	$ 391,035

LINCOLN COUNTY, NEVADA
MAJOR SOLID WASTE ENTERPRISE FUND
SCHEDULE OF REVENUES, EXPENSES, AND CHANGES IN NET POSITION - BUDGET (GAAP BASIS) AND ACTUAL
Year Ended June 30, 2018

	2018 Budget	2018 Actual	Variance-Positive (Negative)	2017 Actual
Operating revenues:				
Charges for services	$ 624,184	$ 766,005	$ 141,821	$ 356,546
Operating expenses:				
Sanitation:				
Salaries and wages	220,901	240,459	(19,558)	151,819
Employee benefits	90,928	83,871	7,057	39,437
Service and supplies	220,500	120,382	100,118	328,264
Closure and postclosure landfill costs	-	20,000	(20,000)	20,000
Bad debt expense	-	40,000	(40,000)	-
Depreciation	20,000	41,926	(21,926)	28,387
Total operating expenses	552,329	546,638	5,691	567,907
Operating income (loss)	71,855	219,367	147,512	(211,361)
Non-operating revenues (expenses):				
Investment income	-	15	15	63
Operating transfers in	60,000	175,151	115,151	602,933
Operating transfers out	-	-	-	(600)
Total non-operating revenues (expenses)	60,000	175,166	115,166	602,396
Change in net position	$ 131,855	394,533	262,678	391,035
Net Position:				
Beginning of year		391,035		-
Restatement per GASB 75		(8,075)		
Beginning balance as restated		382,960		
End of year		$ 777,493		$ 391,035

LINCOLN COUNTY, NEVADA
MAJOR SOLID WASTE ENTERPRISE FUND
STATEMENT OF CASH FLOWS
Year Ended June 30, 2018

	2018	2017
Cash flows from operating activities:		
Cash received from customers	$ 581,599	$ 356,262
Cash paid for services and supplies	(117,587)	(313,662)
Cash paid for salaries and benefits	(308,808)	(193,007)
Net cash provided (used) by operating activities	155,204	(150,407)
Cash flows from noncapital financing activities:		
Operating transfers in/out	175,151	602,333
Cash flows from capital and related financing activities:		
Purchases of capital assets	(206,398)	(469,023)
Interfund payable	(20,000)	-
Loan proceeds	-	400,000
Net cash provided by investing activities	(226,398)	(69,023)
Cash flows from investing activities:		
Investment income	(10)	16
Net change in cash and cash equivalents	103,947	382,919
Cash:		
Beginning of year	382,919	-
End of year	$ 486,866	$ 382,919
Reconciliation of operating income to net cash provided (used) by operating activities:		
Operating income (loss)	$ 219,367	$ (211,361)
Adjustments to reconcile operating income to net cash provided (used) by operating activities:		
Depreciation expense	41,926	28,387
Bad debt expense	40,000	-
(Increase) decrease in accounts receivable	(184,406)	(284)
Increase (decrease) in accounts payable	2,795	34,602
Increase (decrease) in accrued payroll and benefits	1,044	14,366
Increase (decrease) in compensated absences	19,053	-
Increase (decrease) in land fill closure	20,000	
Increase (decrease) in net pension liability	(10,264)	10,736
Increase (decrease) in net pension expense	5,689	(26,853)
Total adjustments	(64,163)	60,954
Net cash provided (used) by operating activities	$ 155,204	$ (150,407)

LINCOLN COUNTY, NEVADA
NONMAJOR SPECIAL REVENUE FUNDS
COMBINING BALANCE SHEET
June 30, 2018
(With Comparative Totals for June 30, 2017)

	Pioche Town	Alamo Town	Panaca Town	Resource Development Authority	County Library
ASSETS					
Pooled cash and investments	$ 135,602	$ 69,175	$ 8,638	$ 86,329	$ 57,226
Interest receivable	243	125	13	-	-
Taxes receivable	2,109	686	279	-	1,397
Due from other governments	9,343	3,884	7,040	-	93
Due from others	-	-	-	-	-
Prepaid expense	-	-	-	-	-
Interfund receivable	-	-	-	-	-
Total assets	$ 147,297	$ 73,870	$ 15,970	$ 86,329	$ 58,716
LIABILITIES					
Accounts payable	$ 3,326	$ 3,381	$ 2,395	$ 2,455	$ 3,671
Accrued payroll and benefits	5,406	1,070	202	-	2,905
Unearned revenue	-	-	-	83,874	-
Total liabilities	8,732	4,451	2,597	86,329	6,576
DEFERRED INFLOWS OF RESOURCES					
Unavailable revenue - property taxes	2,019	283	208	-	1,153
FUND BALANCE					
Nonspendable	-	-	-	-	-
Restricted for:					
Unincorporated towns	136,546	69,136	13,165	-	-
Multi-species conservation	-	-	-	-	-
General government	-	-	-	-	-
Public safety	-	-	-	-	-
Judicial	-	-	-	-	-
Public works	-	-	-	-	-
Health	-	-	-	-	-
Welfare	-	-	-	-	-
Culture and recreation	-	-	-	-	50,987
Community support	-	-	-	-	-
Intergovernmental	-	-	-	-	-
Committed for:					
Land act	-	-	-	-	-
Water	-	-	-	-	-
Lincoln County Water District	-	-	-	-	-
General government	-	-	-	-	-
Public works	-	-	-	-	-
Health	-	-	-	-	-
Unassigned	-	-	-	-	-
Total fund balance	136,546	69,136	13,165	-	50,987
Total liabilities, deferred inflows of resources, and fund balance	$ 147,297	$ 73,870	$ 15,970	$ 86,329	$ 58,716

Museum	Senior Nutrition	Transportation	Agricultural Extension	Indigent	Medical Indigent
$ 60,377	$ 95,320	$ 160,894	$ 29,491	$ 371,512	$ 436,522
-	-	-	-	-	773
712	1,718	-	334	1,198	2,672
46	112	8,517	22	78	175
-	1,679	-	-	-	-
-	-	-	-	-	-
-	-	-	-	-	-
$ 61,135	$ 98,829	$ 169,411	$ 29,847	$ 372,788	$ 440,142
$ 402	$ 16,438	$ 3,014	$ 3,470	$ 993	$ 77,007
2,794	7,420	3,908	662	2,860	-
-	38,551	-	-	-	-
3,196	62,409	6,922	4,132	3,853	77,007
587	1,410	-	274	983	2,192
-	-	-	-	-	-
-	-	-	-	-	-
-	-	-	-	-	-
-	-	-	-	-	-
-	-	-	-	-	-
-	-	-	-	-	-
-	-	-	-	-	-
-	35,010	-	-	367,952	360,943
57,352	-	-	-	-	-
-	-	162,489	25,441	-	-
-	-	-	-	-	-
-	-	-	-	-	-
-	-	-	-	-	-
-	-	-	-	-	-
-	-	-	-	-	-
-	-	-	-	-	-
-	-	-	-	-	-
-	-	-	-	-	-
57,352	35,010	162,489	25,441	367,952	360,943
$ 61,135	$ 98,829	$ 169,411	$ 29,847	$ 372,788	$ 440,142

LINCOLN COUNTY, NEVADA
NONMAJOR SPECIAL REVENUE FUNDS
COMBINING BALANCE SHEET
June 30, 2018
(With Comparative Totals for June 30, 2017)

	China Springs	Ambulance	Regional Streets and Highways	Room Tax	Legal Aid Services
ASSETS					
Pooled cash and investments	$ 1,069	$ 15,363	$ 590,718	$ 75,814	$ 10,630
Interest receivable	-	16	2,865	-	-
Taxes receivable	140	-	-	6,456	-
Due from other governments	10	-	20,963	-	-
Due from others	-	-	-	-	-
Prepaid expense	-	-	-	-	-
Interfund receivable	-	-	-	-	-
Total assets	$ 1,219	$ 15,379	$ 614,546	$ 82,270	$ 10,630
LIABILITIES					
Accounts payable	$ -	$ 3,996	$ 12,705	$ 2,012	$ -
Accrued payroll and benefits	-	1,930	-	447	-
Unearned revenue	-	-	-	-	-
Total liabilities	-	5,926	12,705	2,459	-
DEFERRED INFLOWS OF RESOURCES					
Unavailable revenue - property taxes	115	-	-	-	-
FUND BALANCE					
Nonspendable	-	-	-	-	-
Restricted for:					
Unincorporated towns	-	-	-	-	-
Multi-species conservation	-	-	-	-	-
General government	-	-	-	-	-
Public safety	-	-	-	-	-
Judicial	-	-	-	-	10,630
Public works	-	-	601,841	-	-
Health	-	-	-	-	-
Welfare	-	-	-	-	-
Culture and recreation	-	-	-	79,811	-
Community support	-	-	-	-	-
Intergovernmental	1,104	-	-	-	-
Committed for:					
Land act	-	-	-	-	-
Water	-	-	-	-	-
Lincoln County Water District	-	-	-	-	-
General government	-	-	-	-	-
Public works	-	-	-	-	-
Health	-	9,453	-	-	-
Unassigned	-	-	-	-	-
Total fund balance	1,104	9,453	601,841	79,811	10,630
Total liabilities, deferred inflows of resources, and fund balance	$ 1,219	$ 15,379	$ 614,546	$ 82,270	$ 10,630

Forensic Services	Administrative Assessment	Forfeiture	Recorder Technology	L. C. Housing Authority
$ 8,035	$ 89,792	$ 48,458	$ 15,994	$ 33,149
-	158	88	29	56
-	-	-	-	-
-	-	9,974	-	-
-	-	-	-	-
-	-	-	-	-
-	-	-	-	-
$ 8,035	$ 89,950	$ 58,520	$ 16,023	$ 33,205
$ 275	$ 7,000	$ -	$ -	$ 1,058
-	-	-	-	284
-	-	-	-	-
275	7,000	-	-	1,342
-	-	-	-	-
-	-	-	-	-
-	-	-	-	-
-	-	-	-	-
-	-	-	16,023	-
7,760	-	58,520	-	-
-	82,950	-	-	-
-	-	-	-	-
-	-	-	-	-
-	-	-	-	-
-	-	-	-	-
-	-	-	-	31,863
-	-	-	-	-
-	-	-	-	-
-	-	-	-	-
-	-	-	-	-
-	-	-	-	-
-	-	-	-	-
-	-	-	-	-
-	-	-	-	-
7,760	82,950	58,520	16,023	31,863
$ 8,035	$ 89,950	$ 58,520	$ 16,023	$ 33,205

LINCOLN COUNTY, NEVADA
NONMAJOR SPECIAL REVENUE FUNDS
COMBINING BALANCE SHEET
June 30, 2018
(With Comparative Totals for June 30, 2017)

	Alamo Clinic	Fair Board	Multi-Species Habitat Conservation	Multi-Species Habitat Conservation Section 7	Youth Activities Counsel
ASSETS					
Pooled cash and investments	$ 233	$ 20,161	$ 21,105	$ 861,358	$ 6,007
Interest receivable	-	34	40	1,523	-
Taxes receivable	1,418	-	-	-	-
Due from other governments	92	100	-	-	-
Due from others	-	-	-	-	-
Prepaid expense	-	-	-	-	-
Interfund receivable	-	-	-	-	-
Total assets	$ 1,743	$ 20,295	$ 21,145	$ 862,881	$ 6,007
LIABILITIES					
Accounts payable	$ 326	$ 177	$ -	$ -	$ -
Accrued payroll and benefits	-	-	-	-	-
Unearned revenue	-	-	21,145	-	-
Total liabilities	326	177	21,145	-	-
DEFERRED INFLOWS OF RESOURCES					
Unavailable revenue - property taxes	1,164	-	-	-	-
FUND BALANCE					
Nonspendable	-	-	-	-	-
Restricted for:					
Unincorporated towns	-	-	-	-	-
Multi-species conservation	-	-	-	862,881	-
General government	-	-	-	-	-
Public safety	-	-	-	-	-
Judicial	-	-	-	-	-
Public works	-	-	-	-	-
Health	253	-	-	-	-
Welfare	-	-	-	-	-
Culture and recreation	-	20,118	-	-	-
Community support	-	-	-	-	6,007
Intergovernmental	-	-	-	-	-
Committed for:					
Land act	-	-	-	-	-
Water	-	-	-	-	-
Lincoln County Water District	-	-	-	-	-
General government	-	-	-	-	-
Public works	-	-	-	-	-
Health	-	-	-	-	-
Unassigned	-	-	-	-	-
Total fund balance	253	20,118	-	862,881	6,007
Total liabilities, deferred inflows of resources, and fund balance	$ 1,743	$ 20,295	$ 21,145	$ 862,881	$ 6,007

Genetic Marker Testing	Public Improvement	Airport	Panaca Town Building	Court Facility Fees	Tri County Weed Control
$ 3,192	$ 142,335	$ 259	$ 44,706	$ 71,427	$ 249,375
-	254	-	82	113	399
-	-	-	-	-	-
-	-	120	-	-	-
-	-	-	-	-	-
-	-	-	-	-	-
-	-	-	-	-	-
$ 3,192	$ 142,589	$ 379	$ 44,788	$ 71,540	$ 249,774
$ 1,850	$ -	$ 648	$ -	$ 2,500	$ 26,503
-	-	-	-	-	32,433
-	-	-	-	-	-
1,850	-	648	-	2,500	58,936
-	-	-	-	-	-
-	-	-	-	-	-
-	-	-	-	-	-
-	-	-	-	-	-
1,342	-	-	-	-	190,838
-	-	-	-	-	-
-	-	-	-	69,040	-
-	142,589	-	-	-	-
-	-	-	-	-	-
-	-	-	-	-	-
-	-	-	-	-	-
-	-	-	-	-	-
-	-	-	-	-	-
-	-	-	-	-	-
-	-	-	-	-	-
-	-	-	44,788	-	-
-	-	-	-	-	-
-	-	-	-	-	-
-	-	(269)	-	-	-
1,342	142,589	(269)	44,788	69,040	190,838
$ 3,192	$ 142,589	$ 379	$ 44,788	$ 71,540	$ 249,774

LINCOLN COUNTY, NEVADA
NONMAJOR SPECIAL REVENUE FUNDS
COMBINING BALANCE SHEET
June 30, 2018
(With Comparative Totals for June 30, 2017)

	Lincoln County Land Act General	Lincoln County Land Act Planning and Development	Lincoln County Land Act Education	Lincoln County Land Act Grant Match	Lincoln County Water General
ASSETS					
Pooled cash and investments	$ 6,566	$ 668	$ 124,582	$ 151	$ 604
Interest receivable	9	-	219	-	4
Taxes receivable	-	-	-	-	-
Due from other governments	-	-	-	-	-
Due from others	-	-	-	-	-
Prepaid expense	-	-	-	-	-
Interfund receivable	-	-	-	-	-
Total assets	$ 6,575	$ 668	$ 124,801	$ 151	$ 608
LIABILITIES					
Accounts payable	$ -	$ -	$ -	$ -	$ -
Accrued payroll and benefits	-	-	-	-	-
Unearned revenue	-	-	-	-	-
Total liabilities	-	-	-	-	-
DEFERRED INFLOWS OF RESOURCES					
Unavailable revenue - property taxes	-	-	-	-	-
FUND BALANCE					
Nonspendable	-	-	-	-	-
Restricted for:					
Unincorporated towns	-	-	-	-	-
Multi-species conservation	-	-	-	-	-
General government	-	-	-	-	-
Public safety	-	-	-	-	-
Judicial	-	-	-	-	-
Public works	-	-	-	-	-
Health	-	-	-	-	-
Welfare	-	-	-	-	-
Culture and recreation	-	-	-	-	-
Community support	-	-	-	-	-
Intergovernmental	-	-	-	-	-
Committed for:					
Land act	6,575	668	124,801	151	-
Water	-	-	-	-	608
Lincoln County Water District	-	-	-	-	-
General government	-	-	-	-	-
Public works	-	-	-	-	-
Health	-	-	-	-	-
Unassigned	-	-	-	-	-
Total fund balance	6,575	668	124,801	151	608
Total liabilities, deferred inflows of resources, and fund balance	$ 6,575	$ 668	$ 124,801	$ 151	$ 608

Lincoln County Water Special Projects	Lincoln County Water Planning and Development	Lincoln County Water Special Use	Lincoln County Water Grant Match	Lincoln County Water District General	Lincoln County Water District Plan & Dev
$ 8,384	$ 83,166	$ 1,163,802	$ 83,104	$ 433,593	$ 882,957
14	148	2,064	149	820	3,051
-	-	-	-	-	-
-	-	-	-	-	-
-	-	-	-	-	-
-	-	-	-	-	
-	-	190,000	-	-	-
$ 8,398	$ 83,314	$ 1,355,866	$ 83,253	$ 434,413	$ 886,008
$ -	$ -	$ -	$ -	$ 2,164	$ 9,225
-	-	-	-	5,800	-
-	-	-	-	-	-
-	-	-	-	7,964	9,225
-	-	-	-	-	-
-	-	-	-	-	-
				-	-
-	-	-	-	-	-
-	-	-	-	-	-
-	-	-	-	-	-
-	-	-	-	-	-
-	-	-	-	-	-
-	-	-	-	-	-
-	-	-	-	-	-
-	-	-	-	-	-
-	-	-	-	-	-
-	-	-	-		
				-	-
-	-	-	-	-	-
8,398	83,314	1,355,866	83,253	426,449	876,783
-	-	-	-	-	-
-	-	-	-	-	-
-	-	-	-	-	-
-	-	-	-	-	-
-	-	-	-		
8,398	83,314	1,355,866	83,253	426,449	876,783
$ 8,398	$ 83,314	$ 1,355,866	$ 83,253	$ 434,413	$ 886,008

LINCOLN COUNTY, NEVADA
NONMAJOR SPECIAL REVENUE FUNDS
COMBINING BALANCE SHEET
30-Jun-18
(With Comparative Totals for June 30, 2017)

	Lincoln County Water District Special Proj.	Assessor Technology	District Court Technology	District Court Specialty Court	Court Security
ASSETS					
Pooled cash and investments	$ 643,796	$ 44,605	$ 5,120	$ 12,248	$ 9,690
Interest receivable	2,162	-	-	-	17
Taxes receivable	-	-	-	-	-
Due from other governments	-	-	-	-	-
Due from others	-	-	-	-	-
Prepaid expense	48,000	-	-	-	-
Interfund receivable	-	-	-	-	-
Total assets	$ 693,958	$ 44,605	$ 5,120	$ 12,248	$ 9,707
LIABILITIES					
Accounts payable	$ -	$ -	$ -	$ 2,272	$ -
Accrued payroll and benefits	-	-	-	-	-
Unearned revenue	-	-	-	-	-
Total liabilities	-	-	-	2,272	-
DEFERRED INFLOWS OF RESOURCES					
Unavailable revenue - property taxes	-	-	-	-	-
FUND BALANCE					
Nonspendable	48,000	-	-	-	-
Restricted for:					
Unincorporated towns	-	-	-	-	-
Multi-species conservation	-	-	-	-	-
General government	-	44,605	-	-	-
Public safety	-	-	-	-	-
Judicial	-	-	5,120	9,976	9,707
Public works	-	-	-	-	-
Health	-	-	-	-	-
Welfare	-	-	-	-	-
Culture and recreation	-	-	-	-	-
Community support	-	-	-	-	-
Intergovernmental	-	-	-	-	-
Committed for:					
Land act	-	-	-	-	-
Water	-	-	-	-	-
Lincoln County Water District	645,958	-	-	-	-
General government	-	-	-	-	-
Public works	-	-	-	-	-
Health	-	-	-	-	-
Unassigned	-	-	-	-	-
Total fund balance	693,958	44,605	5,120	9,976	9,707
Total liabilities, deferred inflows of resources, and fund balance	$ 693,958	$ 44,605	$ 5,120	$ 12,248	$ 9,707

District Court Enrichment	Nuclear Waste	Property Management	Totals 2018	Totals 2017
$ 43,591	$ 2,099	$ 59,808	$ 7,428,800	$ 7,447,784
78	3	-	15,549	15,643
-	-	-	19,119	17,217
-	-	-	60,569	81,362
-	-	-	1,679	1,953
-	-	-	48,000	56,000
-	-	-	190,000	200,000
$ 43,669	$ 2,102	$ 59,808	$ 7,763,716	$ 7,819,959
$ -	$ 1,100	$ 3,874	$ 194,237	$ 175,897
-	-	676	68,797	63,542
-	1,002	-	144,572	128,302
-	2,102	4,550	407,606	367,741
-	-	-	10,388	10,532
-	-	-	48,000	56,000
-	-	-	218,847	172,659
-	-	-	862,881	862,566
-	-	-	252,808	259,890
-	-	-	66,280	58,882
43,669	-	-	231,092	312,097
-	-	-	744,430	796,146
-	-	-	253	597
-	-	-	763,905	731,762
-	-	-	208,268	217,327
-	-	-	225,800	179,307
-	-	-	1,104	1,108
-	-	-	132,195	132,147
-	-	-	2,834,671	1,530,948
-	-	-	645,958	2,031,240
-	-	55,258	100,046	82,953
-	-	-	-	26
-	-	-	9,453	16,031
-	-	-	(269)	-
43,669	-	55,258	7,345,722	7,441,686
$ 43,669	$ 2,102	$ 59,808	$ 7,763,716	$ 7,819,959

LINCOLN COUNTY, NEVADA
NONMAJOR SPECIAL REVENUE FUNDS
COMBINING SCHEDULE OF REVENUES, EXPENDITURES,
AND CHANGES IN FUND BALANCES
Year Ended June 30, 2018
(With Comparative Totals for Year Ended June 30, 2017)

	Pioche Town	Alamo Town	Panaca Town	Resource Development Authority	County Library
Revenues:					
Taxes	$ 52,012	$ 53,723	$ 11,415	$ -	$ 91,183
Licenses and permits	3,028	-	-	-	-
Intergovernmental	53,356	22,132	40,104	62,354	265
Charges for services	-	-	-	-	-
Fines and forfeitures	-	-	-	-	-
Miscellaneous	7,384	5,187	3	1,300	40
Total revenues	115,780	81,042	51,522	63,654	91,488
Expenditures:					
General government	7,931	25,382	2,672	-	-
Public safety	-	-	-	-	-
Judicial	-	-	-	-	-
Public works	29,587	2,161	15,235	-	-
Health	3,740	-	11,081	-	-
Welfare	-	-	-	-	-
Culture and recreation	54,835	30,675	18,857	-	106,333
Community support	-	-	-	73,654	-
Intergovernmental	-	-	-	-	-
Total expenditures	96,093	58,218	47,845	73,654	106,333
Excess (deficiency) of revenues over expenditures	19,687	22,824	3,677	(10,000)	(14,845)
Other financing sources (uses):					
Operating transfers in	-	-	-	10,000	-
Operating transfers out	-	-	-	-	(4,000)
Total other financing sources (uses)	-	-	-	10,000	(4,000)
Net change in fund balance	19,687	22,824	3,677	-	(18,845)
Fund balance:					
Beginning of year	116,859	46,312	9,488	-	69,832
End of year	$ 136,546	$ 69,136	$ 13,165	$ -	$ 50,987

Museum	Senior Nutrition	Transportation	Agricultural Extension	Indigent	Medical Indigent	China Springs
$ 46,529	$ 112,075	$ -	$ 21,777	$ 78,177	$ 174,205	$ 9,146
-	-	-	-	-	-	-
134	139,415	82,211	62	223	499	26
-	18,212	5,282	-	-	-	-
-	-	-	-	-	-	-
3,551	1,416	-	-	-	160	-
50,214	271,118	87,493	21,839	78,400	174,864	9,172
-	-	-	-	-	-	-
-	-	-	-	-	-	-
-	-	-	-	-	-	-
-	-	-	-	-	-	-
-	-	-	-	-	-	-
-	316,322	-	-	53,728	137,386	-
44,932	-	-	-	-	-	-
-	-	106,997	26,541	-	-	-
-	-	-	-	-	-	19,176
44,932	316,322	106,997	26,541	53,728	137,386	19,176
5,282	(45,204)	(19,504)	(4,702)	24,672	37,478	(10,004)
-	15,197	63,000	7,000	-	-	10,000
-	-	-	-	-	-	-
-	15,197	63,000	7,000	-	-	10,000
5,282	(30,007)	43,496	2,298	24,672	37,478	(4)
52,070	65,017	118,993	23,143	343,280	323,465	1,108
$ 57,352	$ 35,010	$ 162,489	$ 25,441	$ 367,952	$ 360,943	$ 1,104

LINCOLN COUNTY, NEVADA
NONMAJOR SPECIAL REVENUE FUNDS
COMBINING SCHEDULE OF REVENUES, EXPENDITURES,
AND CHANGES IN FUND BALANCES
Year Ended June 30, 2018
(With Comparative Totals for Year Ended June 30, 2017)

	Ambulance	Regional Streets and Highways	Room Tax	Legal Aid Services
Revenues:				
Taxes	$ -	$ -	$ 77,201	$ -
Licenses and permits	-	-	-	-
Intergovernmental	-	117,021	-	-
Charges for services	80,807	-	-	1,899
Fines and forfeitures	-	-	-	-
Miscellaneous	3	593	-	-
Total revenues	80,810	117,614	77,201	1,899
Expenditures:				
General government	-	-	-	-
Public safety	-	-	-	-
Judicial	-	-	-	4,540
Public works	-	62,661	-	-
Health	87,388	-	-	-
Welfare	-	-	-	-
Culture and recreation	-	-	52,759	-
Community support	-	-	-	-
Intergovernmental	-	-	6,085	-
Total expenditures	87,388	62,661	58,844	4,540
Excess (deficiency) of revenues over expenditures	(6,578)	54,953	18,357	(2,641)
Other financing sources (uses):				
Operating transfers in	-	-	-	-
Operating transfers out	-	(106,721)	(20,000)	-
Total other financing sources (uses)	-	(106,721)	(20,000)	-
Net change in fund balance	(6,578)	(51,768)	(1,643)	(2,641)
Fund balance:				
Beginning of year	16,031	653,609	81,454	13,271
End of year	$ 9,453	$ 601,841	$ 79,811	$ 10,630

Forensic Services	Administrative Assessment	Forfeiture	Recorder Technology	L. C. Housing Authority	Alamo Clinic
$ -	$ -	$ -	$ -	$ -	$ 92,548
-	-	-	-	-	-
-	-	-	-	-	265
1,146	-	-	10,688	-	-
-	36,677	22,577	-	-	-
-	33	19	6	36,772	-
1,146	36,710	22,596	10,694	36,772	92,813
-	-	-	2,200	-	-
1,130	-	15,214	-	-	-
-	48,792	-	-	-	-
-	-	-	-	-	-
-	-	-	-	-	93,157
-	-	-	-	-	-
-	-	-	-	-	-
-	-	-	-	36,073	-
-	-	-	-	-	-
1,130	48,792	15,214	2,200	36,073	93,157
16	(12,082)	7,382	8,494	699	(344)
-	-	-	-	-	-
-	-	-	-	-	-
-	-	-	-	-	-
16	(12,082)	7,382	8,494	699	(344)
7,744	95,032	51,138	7,529	31,164	597
$ 7,760	$ 82,950	$ 58,520	$ 16,023	$ 31,863	$ 253

LINCOLN COUNTY, NEVADA
NONMAJOR SPECIAL REVENUE FUNDS
COMBINING SCHEDULE OF REVENUES, EXPENDITURES,
AND CHANGES IN FUND BALANCES
Year Ended June 30, 2018
(With Comparative Totals for Year Ended June 30, 2017)

	Fair Board	Multi-Species Habitat Conservation	Multi-Species Habitat Conservation Section 7	Youth Activities Counsel
Revenues:				
Taxes	$ -	$ -	$ -	$ -
Licenses and permits	-	-	-	-
Intergovernmental	-	2,247	-	-
Charges for services	-	-	-	-
Fines and forfeitures	-	-	-	-
Miscellaneous	26,164	8	315	-
Total revenues	26,164	2,255	315	-
Expenditures:				
General government	-	2,255	-	-
Public safety	-	-	-	-
Judicial	-	-	-	-
Public works	-	-	-	-
Health	-	-	-	-
Welfare	-	-	-	-
Culture and recreation	40,017	-	-	-
Community support	-	-	-	-
Intergovernmental	-	-	-	-
Total expenditures	40,017	2,255	-	-
Excess (deficiency) of revenues over expenditures	(13,853)	-	315	-
Other financing sources (uses):				
Operating transfers in	20,000	-	-	-
Operating transfers out	-	-	-	-
Total other financing sources (uses)	20,000	-	-	-
Net change in fund balance	6,147	-	315	-
Fund balance:				
Beginning of year	13,971	-	862,566	6,007
End of year	$ 20,118	$ -	$ 862,881	$ 6,007

Genetic Marker Testing	Public Improvement	Airport	Panaca Town Building	Court Facility Fees	Tri County Weed Control	Lincoln County Land Act General
$ -	$ -	$ -	$ -	$ -	$ -	$ -
-	-	-	-	-	-	-
-	-	-	-	-	-	-
12,227	-	1,180	-	40,011	789,559	-
-	-	-	-	-	-	-
-	52	7,318	10,586	25	82	2
12,227	52	8,498	10,586	40,036	789,641	2
12,338	-	-	-	-	787,041	-
-	-	-	-	-	-	-
-	-	-	-	102,187	-	-
-	-	8,793	-	-	-	-
-	-	-	-	-	-	-
-	-	-	-	-	-	-
-	-	-	-	-	-	-
-	-	-	-	-	-	-
-	-	-	-	-	-	-
12,338	-	8,793	-	102,187	787,041	-
(111)	52	(295)	10,586	(62,151)	2,600	2
-	-	-	-	-	-	-
-	-	-	-	-	-	-
-	-	-	-	-	-	-
(111)	52	(295)	10,586	(62,151)	2,600	2
1,453	142,537	26	34,202	131,191	188,238	6,573
$ 1,342	$ 142,589	$ (269)	$ 44,788	$ 69,040	$ 190,838	$ 6,575

LINCOLN COUNTY, NEVADA
NONMAJOR SPECIAL REVENUE FUNDS
COMBINING SCHEDULE OF REVENUES, EXPENDITURES,
AND CHANGES IN FUND BALANCE
Year Ended June 30, 2018
(With Comparative Totals for Year Ended June 30, 2017)

	Lincoln County Land Act Planning and Development	Lincoln County Land Act Education	Lincoln County Land Act Grant Match	Lincoln County Water General
Revenues:				
Taxes	$ -	$ -	$ -	$ -
Licenses and permits	-	-	-	-
Intergovernmental	-	-	-	-
Charges for services	-	-	-	-
Fines and forfeitures	-	-	-	-
Miscellaneous	-	46	-	2
Total revenues	-	46	-	2
Expenditures:				
General government	-	-	-	-
Public safety	-	-	-	-
Judicial	-	-	-	-
Public works	-	-	-	-
Health	-	-	-	-
Welfare	-	-	-	-
Culture and recreation	-	-	-	-
Community support	-	-	-	-
Intergovernmental	-	-	-	-
Total expenditures	-	-	-	-
Excess (deficiency) of revenues over expenditures	-	46	-	2
Other financing sources (uses):				
Operating transfers in	-	-	-	-
Operating transfers out	-	-	-	-
Total other financing sources (uses)	-	-	-	-
Net change in fund balance	-	46	-	2
Fund balance:				
Beginning of year	668	124,755	151	606
End of year	$ 668	$ 124,801	$ 151	$ 608

Lincoln County Water Special Projects	Lincoln County Water Planning and Development	Lincoln County Water Special Use	Lincoln County Water Grant Match	Lincoln County Water District General	Lincoln County Water District Plan & Dev	Lincoln County Water District Special Proj.
$ -	$ -	$ -	$ -	$ -	$ -	$ -
-	-	-	-	-	-	-
-	-	-	-	-	-	-
-	-	-	-	-	-	-
-	-	-	-	-	-	-
3	30	425	31	(585)	(2,189)	(1,315)
3	30	425	31	(585)	(2,189)	(1,315)
-	-	-	-	153,494	14,467	18,000
-	-	-	-	-	-	-
-	-	-	-	-	-	-
-	-	-	-	-	-	-
-	-	-	-	-	-	-
-	-	-	-	-	-	-
-	-	-	-	-	-	-
-	-	-	-	-	-	-
-	-	-	-	-	-	-
-	-	-	-	153,494	14,467	18,000
3	30	425	31	(154,079)	(16,656)	(19,315)
-	-	-	-	100,000	-	-
-	-	-	-	-	-	-
-	-	-	-	100,000	-	-
3	30	425	31	(54,079)	(16,656)	(19,315)
8,395	83,284	1,355,441	83,222	480,528	893,439	713,273
$ 8,398	$ 83,314	$ 1,355,866	$ 83,253	$ 426,449	$ 876,783	$ 693,958

LINCOLN COUNTY, NEVADA
NONMAJOR SPECIAL REVENUE FUNDS
COMBINING SCHEDULE OF REVENUES, EXPENDITURES,
AND CHANGES IN FUND BALANCE
Year Ended June 30, 2018
(With Comparative Totals for Year Ended June 30, 2017)

	Assessor Technology	District Court Technology	District Court Specialty Court	Court Security
Revenues:				
Taxes	$ -	$ -	$ -	$ -
Licenses and permits	-	-	-	-
Intergovernmental	-	-	-	-
Charges for services	10,164	-	4,891	1,020
Fines and forfeitures	-	-	-	-
Miscellaneous	-	-	-	3
Total revenues	10,164	-	4,891	1,023
Expenditures:				
General government	28,229	-	-	-
Public safety	-	-	-	-
Judicial	-	-	15,876	-
Public works	-	-	-	-
Health	-	-	-	-
Welfare	-	-	-	-
Culture and recreation	-	-	-	-
Community support	-	-	-	-
Intergovernmental	-	-	-	-
Total expenditures	28,229	-	15,876	-
Excess (deficiency) of revenues over expenditures	(18,065)	-	(10,985)	1,023
Other financing sources (uses):				
Operating transfers in	-	-	-	-
Operating transfers out	-	-	-	-
Total other financing sources (uses)	-	-	-	-
Net change in fund balance	(18,065)	-	(10,985)	1,023
Fund balance:				
Beginning of year	62,670	5,120	20,961	8,684
End of year	$ 44,605	$ 5,120	$ 9,976	$ 9,707

District Court Enrichment	Nuclear Waste	Property Management	Totals 2018	2017
$ -	$ -	$ -	$ 819,991	$ 813,567
-	-	-	3,028	5,355
-	32,506	-	552,820	676,772
5,815	-	-	982,901	1,019,736
-	-	-	59,254	12,000
16	1	15,585	113,072	235,209
5,831	32,507	15,585	2,531,066	2,762,639
-	32,507	49,078	1,135,594	1,327,285
-	-	-	16,344	3,288
-	-	-	171,395	57,516
-	-	-	118,437	92,467
-	-	-	195,366	202,136
-	-	-	507,436	577,529
-	-	-	348,408	297,524
-	-	-	243,265	322,651
-	-	-	25,261	21,820
-	32,507	49,078	2,761,506	2,902,216
5,831	-	(33,493)	(230,440)	(139,577)
-	-	40,000	265,197	103,025
-	-	-	(130,721)	(655,521)
-	-	40,000	134,476	(552,496)
5,831	-	6,507	(95,964)	(692,073)
37,838	-	48,751	7,441,686	8,133,759
$ 43,669	$ -	$ 55,258	$ 7,345,722	$ 7,441,686

LINCOLN COUNTY, NEVADA
NONMAJOR PIOCHE TOWN SPECIAL REVENUE FUND
COMPARATIVE BALANCE SHEETS
June 30, 2018 and 2017

	2018	2017
ASSETS		
Pooled cash and investments	$ 135,602	$ 117,071
Interest receivable	243	264
Taxes receivable	2,109	2,447
Due from other governments	9,343	9,125
Total assets	$ 147,297	$ 128,907
LIABILITIES		
Accounts payable	$ 3,326	$ 5,298
Accrued payroll and benefits	5,406	4,625
Total liabilities	8,732	9,923
DEFERRED INFLOWS OF RESOURCES		
Unavailable revenue - property taxes	2,019	2,125
FUND BALANCE		
Restricted	136,546	116,859
Total liabilities, deferred inflows of resources, and fund balance	$ 147,297	$ 128,907

LINCOLN COUNTY, NEVADA
NONMAJOR PIOCHE TOWN SPECIAL REVENUE FUND
SCHEDULE OF REVENUES, EXPENDITURES, AND CHANGES IN FUND BALANCE - BUDGET (GAAP BASIS) AND ACTUAL
Year Ended June 30, 2018

(With Comparative Actual Amounts for Year Ended June 30, 2017)

	2018 Budget	2018 Actual	Variance - Positive (Negative)	2017 Actual
Revenues:				
Taxes:				
Property taxes	$ 53,298	$ 52,012	$ (1,286)	$ 49,491
Licenses and permits:				
Gaming licenses	2,500	2,295	(205)	3,825
Liquor licenses	1,300	733	(567)	1,530
Total licenses and permits	3,800	3,028	(772)	5,355
Intergovernmental:				
Consolidated tax	51,712	53,356	1,644	52,785
Miscellaneous:				
Investment income	-	50	50	289
Other	-	-	-	-
Rent	5,870	7,334	1,464	7,832
Total miscellaneous	5,870	7,384	1,514	8,121
Total revenues	114,680	115,780	1,100	115,752
Expenditures:				
Current:				
General government:				
Other general expenses:				
Employee benefits	966	1,080	(114)	981
Services and supplies	10,500	6,851	3,649	6,280
Total general government	11,466	7,931	3,535	7,261
Public works:				
Highways and streets:				
Salaries and wages	10,075	6,516	3,559	8,136
Employee benefits	3,297	3,064	233	3,538
Services and supplies	22,650	20,007	2,643	12,302
Total public works	36,022	29,587	6,435	23,976
Health:				
Cemetery:				
Salaries and wages	2,466	1,871	595	2,435
Employee benefits	690	748	(58)	649
Services and supplies	3,691	1,121	2,570	3,143
Total health	$ 6,847	$ 3,740	$ 3,107	$ 6,227

LINCOLN COUNTY, NEVADA
NONMAJOR PIOCHE TOWN SPECIAL REVENUE FUND (Continued)
SCHEDULE OF REVENUES, EXPENDITURES, AND CHANGES
IN FUND BALANCE - BUDGET (GAAP BASIS) AND ACTUAL
Year Ended June 30, 2018

(With Comparative Actual Amounts for Year Ended June 30, 2017)

	2018 Budget	2018 Actual	Variance - Positive (Negative)	2017 Actual
Expenditures: (Continued)				
Culture and recreation:				
Parks:				
Salaries and wages	$ 6,835	$ 9,592	$ (2,757)	$ 5,706
Employee benefits	2,055	3,536	(1,481)	1,546
Services and supplies	22,200	15,323	6,877	9,965
Total parks	31,090	28,451	2,639	17,217
Swimming pool:				
Salaries and wages	11,051	12,259	(1,208)	11,282
Employee benefits	2,243	3,200	(957)	2,512
Services and supplies	12,750	7,080	5,670	4,748
Total swimming pool	26,044	22,539	3,505	18,542
Town hall:				
Salaries and wages	79	451	(372)	35
Employee benefits	13	180	(167)	10
Services and supplies	4,500	3,214	1,286	3,198
Total town hall	4,592	3,845	747	3,243
Total culture and recreation	61,726	54,835	6,891	39,002
Contingency	3,482	-	3,482	-
Total expenditures	119,543	96,093	23,450	76,466
Excess (deficiency) of revenues over expenditures	(4,863)	19,687	24,550	39,286
Other financing sources (uses):				
Operating transfers out	-	-	-	(3,083)
Net change in fund balance	(4,863)	19,687	24,550	36,203
Fund balance:				
Beginning of year	71,682	116,859	45,177	80,656
End of year	$ 66,819	$ 136,546	$ 69,727	$ 116,859

LINCOLN COUNTY, NEVADA
NONMAJOR ALAMO TOWN SPECIAL REVENUE FUND
COMPARATIVE BALANCE SHEETS
June 30, 2018 and 2017

	2018	2017
ASSETS		
Pooled cash and investments	$ 69,175	$ 47,008
Interest receivable	125	106
Taxes receivable	686	1,514
Due from other governments	3,884	3,785
Total assets	$ 73,870	$ 52,413
LIABILITIES		
Accounts payable	$ 3,381	$ 3,715
Accrued payroll and benefits	1,070	953
Total liabilities	4,451	4,668
DEFERRED INFLOWS OF RESOURCES		
Unavailable revenue - property taxes	283	1,433
FUND BALANCE		
Restricted	69,136	46,312
Total liabilities, deferred inflows of resources, and fund balance	$ 73,870	$ 52,413

LINCOLN COUNTY, NEVADA
NONMAJOR ALAMO TOWN SPECIAL REVENUE FUND
SCHEDULE OF REVENUES, EXPENDITURES, AND CHANGES
IN FUND BALANCE - BUDGET (GAAP BASIS) AND ACTUAL
Year Ended June 30, 2018
(With Comparative Actual Amounts for Year Ended June 30, 2017)

	2018		Variance - Positive	2017
	Budget	Actual	(Negative)	Actual
Revenues:				
Taxes:				
Property taxes	$ 52,121	$ 53,723	$ 1,602	$ 48,506
Intergovernmental:				
Consolidated tax	21,430	22,132	702	21,882
Miscellaneous:				
Investment income	50	27	(23)	119
Other	4,000	5,160	1,160	6,855
Total miscellaneous	4,050	5,187	1,137	6,974
Total revenues	77,601	81,042	3,441	77,362
Expenditures:				
Current:				
General government:				
Salaries and wages	22,527	18,754	3,773	21,225
Employee benefits	2,272	2,545	(273)	2,704
Services and supplies	16,908	4,083	12,825	2,148
Total general government	41,707	25,382	16,325	26,077
Public works:				
Highways and streets:				
Services and supplies	4,612	2,161	2,451	2,429
Culture and recreation:				
P.V. senior center:				
Services and supplies	4,367	3,427	940	3,406
Parks:				
Services and supplies	48,004	27,248	20,756	29,568
Total culture and recreation	52,371	30,675	21,696	32,974
Total expenditures	$ 98,690	$ 58,218	$ 40,472	$ 61,480

LINCOLN COUNTY, NEVADA
NONMAJOR ALAMO TOWN SPECIAL REVENUE FUND (Continued)
SCHEDULE OF REVENUES, EXPENDITURES, AND CHANGES
IN FUND BALANCE - BUDGET (GAAP BASIS) AND ACTUAL
Year Ended June 30, 2018
(With Comparative Actual Amounts for Year Ended June 30, 2017)

	2018		Variance - Positive	2017
	Budget	Actual	(Negative)	Actual
Excess (deficiency) of revenues over expenditures	$ (21,089)	$ 22,824	$ 43,913	$ 15,882
Fund balance:				
Beginning of year	23,351	46,312	22,961	30,430
End of year	$ 2,262	$ 69,136	$ 66,874	$ 46,312

LINCOLN COUNTY, NEVADA
NONMAJOR PANACA TOWN SPECIAL REVENUE FUND
COMPARATIVE BALANCE SHEETS
June 30, 2018 and 2017

	2018	2017
ASSETS		
Pooled cash and investments	$ 8,638	$ 5,283
Interest receivable	13	3
Taxes receivable	279	157
Due from other governments	7,040	6,870
Total assets	$ 15,970	$ 12,313
LIABILITIES		
Accounts payable	$ 2,395	$ 2,695
Accrued payroll and benefits	202	-
Total liabilities	2,597	2,695
DEFERRED INFLOWS OF RESOURCES		
Unavailable revenue - property taxes	208	130
FUND BALANCE		
Restricted	13,165	9,488
Total liabilities, deferred inflows of resources, and fund balance	$ 15,970	$ 12,313

LINCOLN COUNTY, NEVADA
NONMAJOR PANACA TOWN SPECIAL REVENUE FUND
SCHEDULE OF REVENUES, EXPENDITURES, AND CHANGES
IN FUND BALANCE - BUDGET (GAAP BASIS) AND ACTUAL
Year Ended June 30, 2018

(With Comparative Actual Amounts for Year Ended June 30, 2017)

	2018 Budget	2018 Actual	Variance - Positive (Negative)	2017 Actual
Revenues:				
Taxes:				
Property taxes	$ 11,730	$ 11,415	$ (315)	$ 11,450
Intergovernmental:				
Consolidated tax	38,825	40,104	1,279	39,656
Miscellaneous:				
Investment income	-	3	3	(1)
Rent	750	-	(750)	125
Total miscellaneous	750	3	(747)	124
Total revenues	51,305	51,522	217	51,230
Expenditures:				
Current:				
General government:				
Employee benefits	224	546	(322)	448
Services and supplies	4,000	2,126	1,874	3,997
Total general government	4,224	2,672	1,552	4,445
Public works:				
Highways and streets:				
Services and supplies	17,520	15,235	2,285	17,573
Health:				
Cemetery:				
Salaries and wages	9,600	9,600	-	9,600
Employee benefits	1,000	1,050	(50)	1,020
Services and supplies	800	431	369	429
Total health	$ 11,400	$ 11,081	$ 319	$ 11,049

LINCOLN COUNTY, NEVADA
NONMAJOR PANACA TOWN SPECIAL REVENUE FUND
SCHEDULE OF REVENUES, EXPENDITURES, AND CHANGES
IN FUND BALANCE - BUDGET (GAAP BASIS) AND ACTUAL
Year Ended June 30, 2018

(With Comparative Actual Amounts for Year Ended June 30, 2017)

	2018 Budget	2018 Actual	Variance - Positive (Negative)	2017 Actual
Expenditures continued:				
Culture and recreation:				
Parks:				
Services and supplies	$ 19,587	$ 12,545	$ 7,042	$ 13,247
Town hall:				
Salaries and wages	2,400	2,400	-	2,400
Employee benefits	300	184	116	184
Services and supplies	4,300	3,728	572	4,457
Sesquicentennial celebration:				
Services and supplies	1,000	-	1,000	-
Total culture and recreation	27,587	18,857	8,730	20,288
Total expenditures	60,731	47,845	12,886	53,355
Excess (deficiency) of revenues over expenditures	(9,426)	3,677	13,103	(2,125)
Fund balance:				
Beginning of year	12,289	9,488	(2,801)	11,613
End of year	$ 2,863	$ 13,165	$ 10,302	$ 9,488

LINCOLN COUNTY, NEVADA
NONMAJOR RESOURCE DEVELOPMENT AUTHORITY SPECIAL REVENUE FUND
COMPARATIVE BALANCE SHEETS
June 30, 2018 and 2017

	2018	2017
ASSETS		
Pooled cash and investments	$ 86,329	$ 59,406
Due from other governments	-	16,514
Total assets	$ 86,329	$ 75,920
LIABILITIES		
Accounts payable	$ 2,455	$ 4,518
Unearned revenue	83,874	71,402
Total liabilities	86,329	75,920
FUND BALANCE		
Nonspendable	-	-
Total liabilities and fund balance	$ 86,329	$ 75,920

LINCOLN COUNTY, NEVADA
NONMAJOR RESOURCE DEVELOPMENT AUTHORITY SPECIAL REVENUE FUND
SCHEDULE OF REVENUES, EXPENDITURES, AND CHANGES
IN FUND BALANCE - BUDGET (GAAP BASIS) AND ACTUAL
Year Ended June 30, 2018
(With Comparative Actual Amounts for Year Ended June 30, 2017)

	2018 Budget	2018 Actual	Variance - Positive (Negative)	2017 Actual
Revenues:				
Intergovernmental:				
Grants	$ 193,320	$ 62,354	$ (130,966)	$ 87,570
Miscellaneous:				
Other	-	-	-	1,442
Donations	-	1,300	1,300	4,000
Total miscellaneous	-	1,300	1,300	5,442
Total revenues	193,320	63,654	(129,666)	93,012
Expenditures:				
Current:				
Community support:				
Services and supplies	203,320	73,654	129,666	93,012
Excess (deficiency) of revenues over expenditures	(10,000)	(10,000)	-	-
Other financing sources (uses):				
Operating transfers in	10,000	10,000	-	-
Net change in fund balance	-	-	-	-
Fund balance:				
Beginning of year	-	-	-	-
End of year	$ -	$ -	$ -	$ -

LINCOLN COUNTY, NEVADA
NONMAJOR COUNTY LIBRARY SPECIAL REVENUE FUND
COMPARATIVE BALANCE SHEETS
June 30, 2018 and 2017

	2018	2017
ASSETS		
Pooled cash and investments	$ 57,226	$ 80,993
Taxes receivable	1,397	1,140
Due from governments	93	4,114
Total assets	$ 58,716	$ 86,247
LIABILITIES		
Accounts payable	$ 3,671	$ 12,835
Accrued payroll and benefits	2,905	2,611
Total liabilities	6,576	15,446
DEFERRED INFLOWS OF RESOURCES		
Unavailable revenue - property taxes	1,153	969
FUND BALANCE		
Restricted	50,987	69,832
Total liabilities, deferred inflows of resources, and fund balance	$ 58,716	$ 86,247

LINCOLN COUNTY, NEVADA
NONMAJOR COUNTY LIBRARY SPECIAL REVENUE FUND
SCHEDULE OF REVENUES, EXPENDITURES, AND CHANGES IN FUND BALANCE - BUDGET (GAAP BASIS) AND ACTUAL
Year Ended June 30, 2018
(With Comparative Actual Amounts for Year Ended June 30, 2017)

	2018 Budget	2018 Actual	Variance - Positive (Negative)	2017 Actual
Revenues:				
Taxes:				
Property taxes	$ 93,001	$ 91,183	$ (1,818)	$ 93,418
Intergovernmental:				
Private car line	-	172	172	-
Fish and wildlife	-	93	93	114
Grants	-	-	-	4,000
Total intergovernmental	-	265	265	4,114
Miscellaneous:				
Rent	9,500	40	(9,460)	-
Total revenues	102,501	91,488	(11,013)	97,532
Expenditures:				
Current:				
Culture and recreation:				
Libraries:				
Salaries and wages	41,238	38,600	2,638	38,592
Employee benefits	18,154	18,424	(270)	16,428
Services and supplies	32,500	23,734	8,766	25,747
Capital outlay	35,000	25,575	9,425	9,696
Total expenditures	126,892	106,333	20,559	90,463
Excess (deficiency) of revenues over expenditures	(24,391)	(14,845)	9,546	7,069
Other financing sources (uses):				
Operating transfers out	-	(4,000)	(4,000)	(20,000)
Net change in fund balance	(24,391)	(18,845)	5,546	(12,931)
Fund balance:				
Beginning of year	56,310	69,832	13,522	82,763
End of year	$ 31,919	$ 50,987	$ 19,068	$ 69,832

LINCOLN COUNTY, NEVADA
NONMAJOR MUSEUM SPECIAL REVENUE FUND
COMPARATIVE BALANCE SHEETS
June 30, 2018 and 2017

	2018	2017
ASSETS		
Pooled cash and investments	$ 60,377	$ 54,501
Taxes receivable	712	587
Due from other governments	46	58
Total assets	$ 61,135	$ 55,146
LIABILITIES		
Accounts payable	$ 402	$ 563
Accrued payroll and benefits	2,794	2,013
Total liabilities	3,196	2,576
DEFERRED INFLOWS OF RESOURCES		
Unavailable revenue - property taxes	587	500
FUND BALANCE		
Restricted	57,352	52,070
Total liabilities, deferred inflows of resources, and fund balance	$ 61,135	$ 55,146

LINCOLN COUNTY, NEVADA
NONMAJOR MUSEUM SPECIAL REVENUE FUND
SCHEDULE OF REVENUES, EXPENDITURES, AND CHANGES IN FUND BALANCE - BUDGET (GAAP BASIS) AND ACTUAL
Year Ended June 30, 2018
(With Comparative Actual Amounts for Year Ended June 30, 2017)

	2018 Budget	2018 Actual	Variance - Positive (Negative)	2017 Actual
Revenues:				
Taxes:				
Property taxes	$ 47,556	$ 46,529	$ (1,027)	$ 47,698
Intergovernmental:				
Fish and wildlife	-	47	47	58
Private car line	-	87	87	-
Total intergovernmental	-	134	134	58
Miscellaneous:				
Donations	-	3,551	3,551	2,342
Total revenues	47,556	50,214	2,658	50,098
Expenditures:				
Current:				
Culture and recreation:				
Museum:				
Salaries and wages	38,779	28,908	9,871	28,134
Employee benefits	10,002	9,654	348	9,325
Services and supplies	9,600	6,370	3,230	12,823
Total expenditures	58,381	44,932	13,449	50,282
Excess (deficiency) of revenues over expenditures	(10,825)	5,282	16,107	(184)
Other financing sources (uses):				
Operating transfers out	-	-	-	(20,000)
Net change in fund balance	(10,825)	5,282	16,107	(20,184)
Fund balance:				
Beginning of year	37,198	52,070	14,872	72,254
End of year	$ 26,373	$ 57,352	$ 30,979	$ 52,070

LINCOLN COUNTY, NEVADA
NONMAJOR SENIOR NUTRITION SPECIAL REVENUE FUND
COMPARATIVE BALANCE SHEETS
June 30, 2018 and 2017

	2018	2017
ASSETS		
Pooled cash and investments	$ 95,320	$ 86,791
Taxes receivable	1,718	1,440
Due from other governments	112	138
Due from others	1,679	1,953
Total assets	$ 98,829	$ 90,322
LIABILITIES		
Accounts payable	$ 16,438	$ 17,002
Accrued payroll and benefits	7,420	7,074
Unearned revenue	38,551	-
Total liabilities	62,409	24,076
DEFERRED INFLOWS OF RESOURCES		
Unavailable revenue - property taxes	1,410	1,229
FUND BALANCE		
Restricted	35,010	65,017
Total liabilities, deferred inflows of resources, and fund balance	$ 98,829	$ 90,322

LINCOLN COUNTY, NEVADA
NONMAJOR SENIOR NUTRITION SPECIAL REVENUE FUND
SCHEDULE OF REVENUES, EXPENDITURES, AND CHANGES IN FUND BALANCE - BUDGET (GAAP BASIS) AND ACTUAL
Year Ended June 30, 2018
(With Comparative Actual Amounts for Year Ended June 30, 2017)

	2018		Variance - Positive	2017
	Budget	Actual	(Negative)	Actual
Revenues:				
Taxes:				
Property taxes	$ 115,169	$ 112,075	$ (3,094)	$ 115,079
Intergovernmental:				
Private car line	210	208	(2)	-
Grants	139,094	139,094	-	148,957
Fish and wildlife	115	113	(2)	138
Total intergovernmental	139,419	139,415	(4)	149,095
Charges for services:				
Sales - meals	25,000	18,212	(6,788)	17,830
Miscellaneous:				
Other	2,000	-	(2,000)	13,241
Donations	-	1,416	1,416	3,214
Total miscellaneous	2,000	1,416	(584)	16,455
Total revenues	281,588	271,118	(10,470)	298,459
Expenditures:				
Current:				
Welfare:				
Salaries and wages	113,039	87,456	25,583	90,085
Employee benefits	39,117	46,597	(7,480)	48,727
Services and supplies	169,684	177,069	(7,385)	211,118
Capital outlay	-	5,200	(5,200)	-
Total expenditures	321,840	316,322	5,518	349,930
Excess (deficiency) of revenues over expenditures	(40,252)	(45,204)	(4,952)	(51,471)
Other financing sources (uses):				
Operating transfers in	-	15,197	15,197	13,425
Net change in fund balance	(40,252)	(30,007)	10,245	(38,046)
Fund balance:				
Beginning of year	44,625	65,017	20,392	103,063
End of year	$ 4,373	$ 35,010	$ 30,637	$ 65,017

LINCOLN COUNTY, NEVADA
NONMAJOR TRANSPORTATION SPECIAL REVENUE FUND
COMPARATIVE BALANCE SHEETS
June 30, 2018 and 2017

	2018	2017
ASSETS		
Pooled cash and investments	$ 160,894	$ 112,161
Due from other governments	8,517	12,336
Total assets	$ 169,411	$ 124,497
LIABILITIES		
Accounts payable	$ 3,014	$ 2,390
Accrued payroll and benefits	3,908	3,114
Total liabilities	6,922	5,504
FUND BALANCE		
Restricted	162,489	118,993
Total liabilities and fund balance	$ 169,411	$ 124,497

LINCOLN COUNTY, NEVADA
NONMAJOR TRANSPORTATION SPECIAL REVENUE FUND
SCHEDULE OF REVENUES, EXPENDITURES, AND CHANGES IN FUND BALANCE - BUDGET (GAAP BASIS) AND ACTUAL
Year Ended June 30, 2018
(With Comparative Actual Amounts for Year Ended June 30, 2017)

	2018		Variance - Positive	2017
	Budget	Actual	(Negative)	Actual
Revenues:				
Intergovernmental:				
Grants	$ 116,136	$ 82,211	$ (33,925)	$ 163,263
Charges for services:				
Bus fares	5,800	5,282	(518)	5,462
Total revenues	121,936	87,493	(34,443)	168,725
Expenditures:				
Current:				
Community support:				
Salaries and wages	48,101	49,033	(932)	41,261
Employee benefits	25,706	26,832	(1,126)	23,980
Services and supplies	42,800	31,132	11,668	32,584
Capital outlay	56,136	-	56,136	69,355
Total expenditures	172,743	106,997	65,746	167,180
Excess (deficiency) of revenues over expenditures	(50,807)	(19,504)	31,303	1,545
Other financing sources (uses):				
Operating transfers in	40,000	63,000	23,000	-
Net change in fund balance	(10,807)	43,496	54,303	1,545
Fund balance:				
Beginning of year	88,893	118,993	30,100	117,448
End of year	$ 78,086	$ 162,489	$ 84,403	$ 118,993

LINCOLN COUNTY, NEVADA
NONMAJOR AGRICULTURAL EXTENSION SPECIAL REVENUE FUND
COMPARATIVE BALANCE SHEETS
June 30, 2018 and 2017

	2018	2017
ASSETS		
Pooled cash and investments	$ 29,491	$ 21,691
Taxes receivable	334	281
Due from other governments	22	2,981
Total assets	$ 29,847	$ 24,953
LIABILITIES		
Accounts payable	$ 3,470	$ 951
Accrued payroll and benefits	662	619
Total liabilities	4,132	1,570
DEFERRED INFLOWS OF RESOURCES		
Unavailable revenue - property taxes	274	240
FUND BALANCE		
Restricted	25,441	23,143
Total liabilities, deferred inflows of resources, and fund balance	$ 29,847	$ 24,953

LINCOLN COUNTY, NEVADA
NONMAJOR AGRICULTURAL EXTENSION SPECIAL REVENUE FUND
SCHEDULE OF REVENUES, EXPENDITURES, AND CHANGES
IN FUND BALANCE - BUDGET (GAAP BASIS) AND ACTUAL
Year Ended June 30, 2018
(With Comparative Actual Amounts for Year Ended June 30, 2017)

	2018		Variance - Positive	2017
	Budget	Actual	(Negative)	Actual
Revenues:				
Taxes:				
Property taxes	$ 22,384	$ 21,777	$ (607)	$ 22,358
Intergovernmental:				
Private car line	-	40	40	-
Fish and wildlife	-	22	22	27
Total intergovernmental	-	62	62	27
Miscellaneous:				
Other	5,460	-	(5,460)	500
Total revenues	27,844	21,839	(6,005)	22,885
Expenditures:				
Current:				
Community support:				
Salaries and wages	13,507	13,579	(72)	13,507
Employee benefits	1,437	1,485	(48)	1,436
Services and supplies	23,034	11,477	11,557	3,466
Capital outlay	1,500	-	1,500	-
Total expenditures	39,478	26,541	12,937	18,409
Excess (deficiency) of revenues over expenditures	(11,634)	(4,702)	6,932	4,476
Other financing sources (uses):				
Operating transfers in	7,000	7,000	-	-
Net change in fund balance	(4,634)	2,298	6,932	4,476
Fund balance:				
Beginning of year	4,634	23,143	18,509	18,667
End of year	$ -	$ 25,441	$ 25,441	$ 23,143

LINCOLN COUNTY, NEVADA
NONMAJOR INDIGENT SPECIAL REVENUE FUND
COMPARATIVE BALANCE SHEETS
June 30, 2018 and 2017

	2018	2017
ASSETS		
Pooled cash and investments	$ 371,512	$ 346,271
Taxes receivable	1,198	1,008
Due from other governments	78	96
Total assets	$ 372,788	$ 347,375
LIABILITIES		
Accounts payable	$ 993	$ 950
Accrued payroll and benefits	2,860	2,283
Total liabilities	3,853	3,233
DEFERRED INFLOWS OF RESOURCES		
Unavailable revenue - property taxes	983	862
FUND BALANCE		
Restricted	367,952	343,280
Total liabilities, deferred inflows of resources, and fund balance	$ 372,788	$ 347,375

LINCOLN COUNTY, NEVADA
NONMAJOR INDIGENT SPECIAL REVENUE FUND
SCHEDULE OF REVENUES, EXPENDITURES, AND CHANGES IN FUND BALANCE - BUDGET (GAAP BASIS) AND ACTUAL
Year Ended June 30, 2018
(With Comparative Actual Amounts for Year Ended June 30, 2017)

	2018		Variance - Positive	2017
	Budget	Actual	(Negative)	Actual
Revenues:				
Taxes:				
Property taxes	$ 80,356	$ 78,177	$ (2,179)	$ 80,267
Intergovernmental:				
Private car line	-	145	145	-
Fish and wildlife	-	78	78	96
Total intergovernmental	-	223	223	96
Total revenues	80,356	78,400	(1,956)	80,363
Expenditures:				
Current:				
Welfare:				
Salaries and wages	34,925	36,498	(1,573)	34,865
Employee benefits	12,728	13,702	(974)	13,182
Service and supplies	169,525	3,528	165,997	8,402
Jail:				
Service and supplies	25,000	-	25,000	-
Total expenditures	242,178	53,728	188,450	56,449
Excess (deficiency) of revenues over expenditures	(161,822)	24,672	186,494	23,914
Fund balance:				
Beginning of year	168,271	343,280	175,009	319,366
End of year	$ 6,449	$ 367,952	$ 361,503	$ 343,280

LINCOLN COUNTY, NEVADA
NONMAJOR MEDICAL INDIGENT SPECIAL REVENUE FUND
COMPARATIVE BALANCE SHEETS
June 30, 2018 and 2017

	2018	2017
ASSETS		
Pooled cash and investments	$ 436,522	$ 350,493
Interest receivable	773	821
Taxes receivable	2,672	2,249
Due from other governments	175	215
Total assets	$ 440,142	$ 353,778
LIABILITIES		
Accounts payable	$ 77,007	$ 28,391
DEFERRED INFLOWS OF RESOURCES		
Unavailable revenue - property taxes	2,192	1,922
FUND BALANCE		
Restricted	360,943	323,465
Total liabilities, deferred inflows of resources, and fund balance	$ 440,142	$ 353,778

LINCOLN COUNTY, NEVADA
NONMAJOR MEDICAL INDIGENT SPECIAL REVENUE FUND
SCHEDULE OF REVENUES, EXPENDITURES, AND CHANGES IN FUND BALANCE - BUDGET (GAAP BASIS) AND ACTUAL
Year Ended June 30, 2018
(With Comparative Actual Amounts for Year Ended June 30, 2017)

	2018		Variance - Positive	2017
	Budget	Actual	(Negative)	Actual
Revenues:				
Taxes:				
Property taxes	$ 179,067	$ 174,205	$ (4,862)	$ 178,869
Intergovernmental:				
Private car line tax	-	324	324	-
Fish and wildlife	-	175	175	215
Total intergovernmental	-	499	499	215
Miscellaneous:				
Investment income	300	160	(140)	638
Total revenues	179,367	174,864	(4,503)	179,722
Expenditures:				
Current:				
Welfare:				
Service and supplies	377,472	137,386	240,086	171,150
Excess (deficiency) of revenues over expenditures	(198,105)	37,478	235,583	8,572
Fund balance:				
Beginning of year	205,447	323,465	118,018	314,893
End of year	$ 7,342	$ 360,943	$ 353,601	$ 323,465

LINCOLN COUNTY, NEVADA
NONMAJOR CHINA SPRINGS SPECIAL REVENUE FUND
COMPARATIVE BALANCE SHEETS
June 30, 2018 and 2017

	2018	2017
ASSETS		
Pooled cash and investments	$ 1,069	$ 1,079
Taxes receivable	140	117
Due from other governments	10	13
Total assets	$ 1,219	$ 1,209
LIABILITIES		
Accounts payable	$ -	$ -
DEFERRED INFLOWS OF RESOURCES		
Unavailable revenue - property taxes	115	101
FUND BALANCE		
Restricted	1,104	1,108
Total liabilities, deferred inflows of resources, and fund balance	$ 1,219	$ 1,209

LINCOLN COUNTY, NEVADA
NONMAJOR CHINA SPRINGS SPECIAL REVENUE FUND
SCHEDULE OF REVENUES, EXPENDITURES, AND CHANGES IN FUND BALANCE - BUDGET (GAAP BASIS) AND ACTUAL
Year Ended June 30, 2018
(With Comparative Actual Amounts for Year Ended June 30, 2017)

	2018		Variance - Positive	2017
	Budget	Actual	(Negative)	Actual
Revenues:				
Taxes:				
Property taxes	$ 9,400	$ 9,146	$ (254)	$ 9,391
Intergovernmental:				
Private car line	45	17	(28)	-
Fish and wildlife	25	9	(16)	11
Total intergovernmental	70	26	(44)	11
Total revenues	9,470	9,172	(298)	9,402
Expenditures:				
Current:				
Intergovernmental:				
Services and supplies	19,470	19,176	294	16,587
Excess (deficiency) of revenues over expenditures	(10,000)	(10,004)	(4)	(7,185)
Other financing sources (uses):				
Operating transfers in	10,000	10,000	-	4,000
Net change in fund balance	-	(4)	(4)	(3,185)
Fund balance:				
Beginning of year	-	1,108	1,108	4,293
End of year	$ -	$ 1,104	$ 1,104	$ 1,108

LINCOLN COUNTY, NEVADA
NONMAJOR AMBULANCE SPECIAL REVENUE FUND
COMPARATIVE BALANCE SHEETS
June 30, 2018 and 2017

	2018	2017
ASSETS		
Pooled cash and investments	$ 15,363	$ 31,460
Interest receivable	16	50
Total assets	$ 15,379	$ 31,510
LIABILITIES		
Accounts payable	$ 3,996	$ 7,995
Accrued payroll and benefits	1,930	7,484
Total liabilities	5,926	15,479
FUND BALANCE		
Committed	9,453	16,031
Total liabilities and fund balance	$ 15,379	$ 31,510

LINCOLN COUNTY, NEVADA
NONMAJOR AMBULANCE SPECIAL REVENUE FUND
SCHEDULE OF REVENUES, EXPENDITURES, AND CHANGES IN FUND BALANCE - BUDGET (GAAP BASIS) AND ACTUAL
Year Ended June 30, 2018
(With Comparative Actual Amounts for Year Ended June 30, 2017)

	2018		Variance - Positive	2017
	Budget	Actual	(Negative)	Actual
Revenues:				
Charges for services:				
Ambulance fees	$ 110,000	$ 80,807	$ (29,193)	$ 70,288
Miscellaneous:				
Investment income	100	3	(97)	(15)
Total revenues	110,100	80,810	(29,290)	70,273
Expenditures:				
Current:				
Health:				
Salaries and wages	37,000	34,920	2,080	35,995
Employee benefits	10,400	5,238	5,162	4,346
Services and supplies	62,700	47,230	15,470	49,588
Total expenditures	110,100	87,388	22,712	89,929
Excess (deficiency) of revenues over expenditures	-	(6,578)	(6,578)	(19,656)
Other financing sources (uses):				
Operating transfers in	-	-	-	10,000
Net change in fund balance	-	(6,578)	(6,578)	(9,656)
Fund balance:				
Beginning of year	-	16,031	16,031	25,687
End of year	$ -	$ 9,453	$ 9,453	$ 16,031

LINCOLN COUNTY, NEVADA
NONMAJOR REGIONAL TRANSPORTATION COMMISSION SPECIAL REVENUE FUND
COMPARATIVE BALANCE SHEETS
June 30, 2018 and 2017

	2018	2017
ASSETS		
Pooled cash and investments	$ 590,718	$ 652,176
Interest receivable	2,865	1,528
Due from other governments	20,963	21,282
Total assets	$ 614,546	$ 674,986
LIABILITIES		
Accounts payable	$ 12,705	$ 21,377
FUND BALANCE		
Restricted	601,841	653,609
Total liabilities and fund balance	$ 614,546	$ 674,986

LINCOLN COUNTY, NEVADA
NONMAJOR REGIONAL TRANSPORTATION COMMISSION SPECIAL REVENUE FUND
SCHEDULE OF REVENUES, EXPENDITURES, AND CHANGES
IN FUND BALANCE - BUDGET (GAAP BASIS) AND ACTUAL
Year Ended June 30, 2018
(With Comparative Actual Amounts for Year Ended June 30, 2017)

	2018 Budget	2018 Actual	Variance - Positive (Negative)	2017 Actual
Revenues:				
Intergovernmental:				
Optional $0.04 gas tax	$ 127,188	$ 117,021	$ (10,167)	$ 117,411
Miscellaneous:				
Investment income	2,000	593	(1,407)	914
Total revenues	129,188	117,614	(11,574)	118,325
Expenditures:				
Current:				
Public works:				
Employee benefits	230	295	(65)	268
Services and supplies	574,770	24,166	550,604	6,148
Capital outlay	-	38,200	(38,200)	21,010
Total expenditures	575,000	62,661	512,339	27,426
Excess (deficiency) of revenues over expenditures	(445,812)	54,953	500,765	90,899
Other financing sources (uses):				
Operating transfers out	(40,000)	(106,721)	(66,721)	(49,505)
Net change in fund balance	(485,812)	(51,768)	434,044	41,394
Fund balance:				
Beginning of year	491,985	653,609	161,624	612,215
End of year	$ 6,173	$ 601,841	$ 595,668	$ 653,609

LINCOLN COUNTY, NEVADA
NONMAJOR ROOM TAX SPECIAL REVENUE FUND
COMPARATIVE BALANCE SHEETS
June 30, 2018 and 2017

	2018	2017
ASSETS		
Pooled cash and investments	$ 75,814	$ 78,060
Taxes receivable	6,456	5,083
Total assets	$ 82,270	$ 83,143
LIABILITIES		
Accounts payable	$ 2,012	$ 1,379
Accrued payroll and benefits	447	310
Total liabilities	2,459	1,689
FUND BALANCE		
Restricted	79,811	81,454
Total liabilities and fund balance	$ 82,270	$ 83,143

LINCOLN COUNTY, NEVADA
NONMAJOR ROOM TAX SPECIAL REVENUE FUND
SCHEDULE OF REVENUES, EXPENDITURES AND CHANGES IN FUND BALANCE - BUDGET (GAAP BASIS) AND ACTUAL
Year Ended June 30, 2018
(With Comparative Actual Amounts for Year Ended June 30, 2017)

	2018 Budget	2018 Actual	Variance - Positive (Negative)	2017 Actual
Revenues:				
Taxes:				
Room tax	$ 65,000	$ 77,201	$ 12,201	$ 62,018
Expenditures:				
Current:				
Culture and recreation:				
Salaries and wages	3,360	3,360	-	3,360
Employee benefits	358	860	(502)	805
Services and supplies	22,000	48,539	(26,539)	27,834
Capital outlay	-	-	-	5,000
Total culture and recreation	25,718	52,759	(27,041)	36,999
Intergovernmental:				
Services and supplies	5,500	6,085	(585)	5,233
Total expenditures	31,218	58,844	(27,626)	42,232
Excess (deficiency) of revenues over expenditures	33,782	18,357	(15,425)	19,786
Other financing sources (uses):				
Operating transfers out	(20,000)	(20,000)	-	-
Net change in fund balance	13,782	(1,643)	(15,425)	19,786
Fund balance:				
Beginning of year	36,954	81,454	44,500	61,668
End of year	$ 50,736	$ 79,811	$ 29,075	$ 81,454

LINCOLN COUNTY, NEVADA
NONMAJOR LEGAL AID SERVICES SPECIAL REVENUE FUND
COMPARATIVE BALANCE SHEETS
June 30, 2018 and 2017

	2018	2017
ASSETS		
Pooled cash and investments	$ 10,630	$ 13,271
LIABILITIES		
Accounts payable	$ -	$ -
FUND BALANCE		
Restricted	10,630	13,271
Total liabilities and fund balance	$ 10,630	$ 13,271

LINCOLN COUNTY, NEVADA
NONMAJOR LEGAL AID SERVICES SPECIAL REVENUE FUND
SCHEDULE OF REVENUES, EXPENDITURES, AND CHANGES IN FUND BALANCE - BUDGET (GAAP BASIS) AND ACTUAL
Year Ended June 30, 2018
(With Comparative Actual Amounts for Year Ended June 30, 2017)

	2018		Variance - Positive	2017
	Budget	Actual	(Negative)	Actual
Revenues:				
Charges for services:				
Other	$ 1,300	$ 1,899	$ 599	$ 2,143
Expenditures:				
Current:				
Judicial:				
Services and supplies	-	4,540	(4,540)	1,122
Excess (deficiency) of revenues over expenditures	1,300	(2,641)	(3,941)	1,021
Fund balance:				
Beginning of year	8,245	13,271	5,026	12,250
End of year	$ 9,545	$ 10,630	$ 1,085	$ 13,271

LINCOLN COUNTY, NEVADA
NONMAJOR FORENSIC SERVICES SPECIAL REVENUE FUND
COMPARATIVE BALANCE SHEETS
June 30, 2018 and 2017

	2018	2017
ASSETS		
Pooled cash and investments	$ 8,035	$ 7,744
LIABILITIES		
Accounts payable	$ 275	$ -
FUND BALANCE		
Restricted	7,760	7,744
Total liabilities and fund balance	$ 8,035	$ 7,744

LINCOLN COUNTY, NEVADA
NONMAJOR FORENSIC SERVICES SPECIAL REVENUE FUND
SCHEDULE OF REVENUES, EXPENDITURES, AND CHANGES IN FUND BALANCE - BUDGET (GAAP BASIS) AND ACTUAL
Year Ended June 30, 2018
(With Comparative Actual Amounts for Year Ended June 30, 2017)

	2018 Budget	2018 Actual	Variance - Positive (Negative)	2017 Actual
Revenues:				
Charges for services:				
Other	$ 2,500	$ 1,146	$ (1,354)	$ 1,435
Expenditures:				
Current:				
Public safety:				
Service and supplies	10,500	1,130	9,370	850
Excess (deficiency) of revenues over expenditures	(8,000)	16	8,016	585
Fund balance:				
Beginning of year	8,000	7,744	(256)	7,159
End of year	$ -	$ 7,760	$ 7,760	$ 7,744

LINCOLN COUNTY, NEVADA
NONMAJOR ADMINISTRATIVE ASSESSMENT SPECIAL REVENUE FUND
COMPARATIVE BALANCE SHEETS
June 30, 2018 and 2017

	2018	2017
ASSETS		
Pooled cash and investments	$ 89,792	$ 95,216
Interest receivable	158	216
Total assets	$ 89,950	$ 95,432
LIABILITIES		
Accounts payable	$ 7,000	$ 400
FUND BALANCE		
Restricted	82,950	95,032
Total liabilities and fund balance	$ 89,950	$ 95,432

LINCOLN COUNTY, NEVADA
NONMAJOR ADMINISTRATIVE ASSESSMENT SPECIAL REVENUE FUND
SCHEDULE OF REVENUES, EXPENDITURES, AND CHANGES
IN FUND BALANCE - BUDGET (GAAP BASIS) AND ACTUAL
Year Ended June 30, 2018
(With Comparative Actual Amounts for Year Ended June 30, 2017)

	2018 Budget	2018 Actual	Variance - Positive (Negative)	2017 Actual
Revenues:				
Fines and forfeitures:				
Administrative assessments	$ 40,630	$ 36,677	$ (3,953)	$ 34,487
Miscellaneous:				
Investment income	160	33	(127)	186
Total revenues	40,790	36,710	(4,080)	34,673
Expenditures:				
Current:				
Judicial:				
Services and supplies	116,229	8,464	107,765	21,413
Capital outlay	-	40,328	(40,328)	-
Total expenditures	116,229	48,792	67,437	21,413
Excess (deficiency) of revenues over expenditures	(75,439)	(12,082)	63,357	13,260
Fund balance:				
Beginning of year	75,439	95,032	19,593	81,772
End of year	$ -	$ 82,950	$ 82,950	$ 95,032

LINCOLN COUNTY, NEVADA
NONMAJOR FORFEITURE SPECIAL REVENUE FUND
COMPARATIVE BALANCE SHEETS
June 30, 2018 and 2017

	2018	2017
ASSETS		
Pooled cash and investments	$ 48,458	$ 51,018
Interest receivable	88	120
Due from other governments	9,974	-
Total assets	$ 58,520	$ 51,138
LIABILITIES		
Accounts payable	$ -	$ -
FUND BALANCE		
Restricted	58,520	51,138
Total liabilities and fund balance	$ 58,520	$ 51,138

LINCOLN COUNTY, NEVADA
NONMAJOR FORFEITURE SPECIAL REVENUE FUND
SCHEDULE OF REVENUES, EXPENDITURES, AND CHANGES IN FUND BALANCE - BUDGET (GAAP BASIS) AND ACTUAL
Year Ended June 30, 2018
(With Comparative Actual Amounts for Year Ended June 30, 2017)

	2018 Budget	2018 Actual	Variance-Positive (Negative)	2017 Actual
Revenues:				
Fines and forfeitures:				
Other	$ 30,000	$ 22,577	$ (7,423)	$ 12,000
Miscellaneous:				
Investment income	-	19	19	126
Total revenues	30,000	22,596	(7,404)	12,126
Expenditures:				
Current:				
Public safety:				
Services and supplies	45,000	2,005	42,995	2,438
Capital outlay	-	13,209	(13,209)	-
Total expenditures	45,000	15,214	29,786	2,438
Excess (deficiency) of revenues over expenditures	(15,000)	7,382	22,382	9,688
Fund balance:				
Beginning of year	30,000	51,138	21,138	41,450
End of year	$ 15,000	$ 58,520	$ 43,520	$ 51,138

LINCOLN COUNTY, NEVADA
NONMAJOR RECORDER TECHNOLOGY SPECIAL REVENUE FUND
COMPARATIVE BALANCE SHEETS
June 30, 2018 and 2017

	2018	2017
ASSETS		
Pooled cash and investments	$ 15,994	$ 7,513
Interest receivable	29	16
Total assets	$ 16,023	$ 7,529
LIABILITIES		
Accounts payable	$ -	$ -
FUND BALANCE		
Restricted	16,023	7,529
Total liabilities and fund balance	$ 16,023	$ 7,529

LINCOLN COUNTY, NEVADA
NONMAJOR RECORDER TECHNOLOGY SPECIAL REVENUE FUND
SCHEDULE OF REVENUES, EXPENDITURES, AND CHANGES
IN FUND BALANCE - BUDGET (GAAP BASIS) AND ACTUAL
Year Ended June 30, 2018
(With Comparative Actual Amounts for Year Ended June 30, 2017)

	2018 Budget	2018 Actual	Variance-Positive (Negative)	2017 Actual
Revenues:				
Charges for services:				
User fees	$ 6,000	$ 10,688	$ 4,688	$ 6,531
Miscellaneous:				
Investment income	-	6	6	9
Total revenues	6,000	10,694	4,694	6,540
Expenditures:				
Current:				
General government:				
Services and supplies	10,000	2,200	7,800	7,375
Excess (deficiency) of revenues over expenditures	(4,000)	8,494	12,494	(835)
Fund balance:				
Beginning of year	4,000	7,529	3,529	8,364
End of year	$ -	$ 16,023	$ 16,023	$ 7,529

LINCOLN COUNTY, NEVADA
NONMAJOR L.C. HOUSING AUTHORITY SPECIAL REVENUE FUND
COMPARATIVE BALANCE SHEETS
June 30, 2018 and 2017

	2018	2017
ASSETS		
Pooled cash and investments	$ 33,149	$ 31,431
Interest receivable	56	74
Total assets	$ 33,205	$ 31,505
LIABILITIES		
Accounts payable	$ 1,058	$ 341
Accrued payroll and benefits	284	-
Total liabilities	1,342	341
FUND BALANCE		
Restricted	31,863	31,164
Total liabilities and fund balance	$ 33,205	$ 31,505

LINCOLN COUNTY, NEVADA
NONMAJOR L. C. HOUSING AUTHORITY SPECIAL REVENUE FUND
SCHEDULE OF REVENUES, EXPENDITURES, AND CHANGES
IN FUND BALANCE - BUDGET (GAAP BASIS) AND ACTUAL
Year Ended June 30, 2018
(With Comparative Actual Amounts for Year Ended June 30, 2017)

	2018		Variance - Positive	2017
	Budget	Actual	(Negative)	Actual
Revenues:				
Miscellaneous:				
Rent	$ 35,000	$ 36,760	$ 1,760	$ 32,769
Investment income	-	12	12	39
Total revenues	35,000	36,772	1,772	32,808
Expenditures:				
Current:				
Community support:				
Salaries and wages	17,000	19,910	(2,910)	20,316
Employee benefits	2,400	2,672	(272)	2,607
Services and supplies	18,637	13,491	5,146	21,127
Capital outlay	15,000	-	15,000	-
Total expenditures	53,037	36,073	16,964	44,050
Excess (deficiency) of revenues over expenditures	(18,037)	699	18,736	(11,242)
Fund balance:				
Beginning of year	38,369	31,164	(7,205)	42,406
End of year	$ 20,332	$ 31,863	$ 11,531	$ 31,164

LINCOLN COUNTY, NEVADA
NONMAJOR ALAMO CLINIC SPECIAL REVENUE FUND
COMPARATIVE BALANCE SHEETS
June 30, 2018 and 2017

	2018	2017
ASSETS		
Pooled cash and investments	$ 233	$ 11,764
Taxes receivable	1,418	1,194
Due from other governments	92	114
Total assets	$ 1,743	$ 13,072
LIABILITIES		
Accounts payable	$ 326	$ 11,454
DEFERRED INFLOWS OF RESOURCES		
Unavailable revenue - property taxes	1,164	1,021
FUND BALANCE		
Restricted	253	597
Total liabilities, deferred inflows of resources, and fund balance	$ 1,743	$ 13,072

LINCOLN COUNTY, NEVADA
NONMAJOR ALAMO CLINIC SPECIAL REVENUE FUND
SCHEDULE OF REVENUES, EXPENDITURES, AND CHANGES IN FUND BALANCE -BUDGET (GAAP BASIS) AND ACTUAL
Year Ended June 30, 2018
(With Comparative Actual Amounts for Year Ended June 30, 2017)

	2018 Budget	2018 Actual	Variance - Positive (Negative)	2017 Actual
Revenues:				
Taxes:				
Property taxes	$ 95,130	$ 92,548	$ (2,582)	$ 95,022
Intergovernmental:				
Private car line	-	172	172	-
Fish and wildlife	-	93	93	114
Total intergovernmental	-	265	265	114
Total revenues	95,130	92,813	(2,317)	95,136
Expenditures:				
Current:				
Health:				
Services and supplies	95,130	93,157	1,973	94,931
Excess (deficiency) of revenues over expenditures	-	(344)	(344)	205
Fund balance:				
Beginning of year	392	597	205	392
End of year	$ 392	$ 253	$ (139)	$ 597

LINCOLN COUNTY, NEVADA
NONMAJOR FAIR BOARD SPECIAL REVENUE FUND
COMPARATIVE BALANCE SHEETS
June 30, 2018 and 2017

	2018	2017
ASSETS		
Pooled cash and investments	$ 20,161	$ 14,144
Interest receivable	34	33
Due from other government	100	-
Total assets	$ 20,295	$ 14,177
LIABILITIES		
Accounts payable	$ 177	$ 206
FUND BALANCE		
Restricted	20,118	13,971
Total liabilities and fund balance	$ 20,295	$ 14,177

LINCOLN COUNTY, NEVADA
NONMAJOR FAIR BOARD SPECIAL REVENUE FUND
SCHEDULE OF REVENUES, EXPENDITURES, AND CHANGES IN FUND BALANCE - BUDGET (GAAP BASIS) AND ACTUAL
Year Ended June 30, 2018
(With Comparative Actual Amounts for Year Ended June 30, 2017)

	2018 Budget	2018 Actual	Variance - Positive (Negative)	2017 Actual
Revenues:				
Miscellaneous:				
Investment income	$ -	$ 7	$ 7	$ 17
Fees	33,697	24,342	(9,355)	19,877
Donations	-	1,815	1,815	-
Total revenues	33,697	26,164	(7,533)	19,894
Expenditures:				
Current:				
Culture and recreation:				
Parks:				
Services and supplies	70,290	40,017	30,273	27,516
Excess (deficiency) of revenues over expenditures	(36,593)	(13,853)	22,740	(7,622)
Other financing sources (uses):				
Operating transfers in	20,000	20,000	-	-
Net change in fund balance	(16,593)	6,147	22,740	(7,622)
Fund balance:				
Beginning of year	16,593	13,971	(2,622)	21,593
End of year	$ -	$ 20,118	$ 20,118	$ 13,971

LINCOLN COUNTY, NEVADA
NONMAJOR MULTI-SPECIES HABITAT CONSERVATION SPECIAL REVENUE FUND
COMPARATIVE BALANCE SHEETS
June 30, 2018 and 2017

	2018	2017
ASSETS		
Pooled cash and investments	$ 21,105	$ 23,337
Interest receivable	40	55
Total assets	$ 21,145	$ 23,392
LIABILITIES		
Unearned revenue	$ 21,145	$ 23,392
Total liabilities	21,145	23,392
FUND BALANCE		
Restricted	-	-
Total liabilities and fund balance	$ 21,145	$ 23,392

LINCOLN COUNTY, NEVADA
NONMAJOR MULTI-SPECIES HABITAT CONSERVATION SPECIAL REVENUE FUND
SCHEDULE OF REVENUES, EXPENDITURES, AND CHANGES
IN FUND BALANCE - BUDGET (GAAP BASIS) AND ACTUAL
Year Ended June 30, 2018
(With Comparative Actual Amounts for Year Ended June 30, 2017)

	2018 Budget	2018 Actual	Variance - Positive (Negative)	2017 Actual
Revenues:				
Intergovernmental:				
Grants	$ 28,198	$ 2,247	$ (25,951)	$ 3,914
Miscellaneous:				
Investment income	-	8	8	35
Total revenues	28,198	2,255	(25,943)	3,949
Expenditures:				
Current:				
General government:				
Services and supplies	28,198	2,255	25,943	3,949
Excess (deficiency) of revenues over expenditures	-	-	-	-
Fund balance:				
Beginning of year	-	-	-	-
End of year	$ -	$ -	$ -	$ -

LINCOLN COUNTY, NEVADA
NONMAJOR MULTI-SPECIES HABITAT CONSERVATION SEC. 7 SPECIAL REVENUE FUND
COMPARATIVE BALANCE SHEETS
June 30, 2018 and 2017

	2018	2017
ASSETS		
Pooled cash and investments	$ 861,358	$ 860,547
Interest receivable	1,523	2,019
Total assets	$ 862,881	$ 862,566
LIABILITIES		
Accounts payable	$ -	$ -
FUND BALANCE		
Restricted	862,881	862,566
Total liabilities and fund balance	$ 862,881	$ 862,566

LINCOLN COUNTY, NEVADA
NONMAJOR MULTI-SPECIES HABITAT CONSERVATION SEC. 7 SPECIAL REVENUE FUND
SCHEDULE OF REVENUES, EXPENDITURES, AND CHANGES
IN FUND BALANCE - BUDGET (GAAP BASIS) AND ACTUAL
Year Ended June 30, 2018
(With Comparative Actual Amounts for Year Ended June 30, 2017)

	2018 Budget	2018 Actual	Variance - Positive (Negative)	2017 Actual
Revenues:				
Miscellaneous:				
Investment income	$ 5,000	$ 315	$ (4,685)	$ 1,590
Expenditures:				
Current:				
General government:				
Services and supplies	870,976	-	870,976	-
Excess (deficiency) of revenues over expenditures	(865,976)	315	866,291	1,590
Fund balance:				
Beginning of year	865,976	862,566	(3,410)	860,976
End of year	$ -	$ 862,881	$ 862,881	$ 862,566

LINCOLN COUNTY, NEVADA
NONMAJOR YOUTH ACTIVITIES COUNSEL SPECIAL REVENUE FUND
COMPARATIVE BALANCE SHEETS
June 30, 2018 and 2017

	2018	2017
ASSETS		
Pooled cash and investments	$ 6,007	$ 6,007
LIABILITIES		
Accrued payroll and benefits	$ -	$ -
FUND BALANCE		
Restricted	6,007	6,007
Total liabilities and fund balance	$ 6,007	$ 6,007

LINCOLN COUNTY, NEVADA
NONMAJOR YOUTH ACTIVITIES COUNSEL SPECIAL REVENUE FUND
SCHEDULE OF REVENUES, EXPENDITURES, AND CHANGES
IN FUND BALANCE - BUDGET (GAAP BASIS) AND ACTUAL
Year Ended June 30, 2018
(With Comparative Actual Amounts for Year Ended June 30, 2017)

	2018		Variance - Positive	2017
	Budget	Actual	(Negative)	Actual
Revenues:				
Miscellaneous:	$ -	$ -	$ -	$ -
Expenditures:				
Current:				
Community support:				
Services and supplies	6,007	-	6,007	-
Excess (deficiency) of revenues over expenditures	(6,007)	-	6,007	-
Fund balance:				
Beginning of year	6,007	6,007	-	6,007
End of year	$ -	$ 6,007	$ 6,007	$ 6,007

LINCOLN COUNTY, NEVADA
NONMAJOR GENETIC MARKER TESTING SPECIAL REVENUE FUND
COMPARATIVE BALANCE SHEETS
June 30, 2018 and 2017

	2018	2017
ASSETS		
Pooled cash and investments	$ 3,192	$ 3,689
LIABILITIES		
Accounts payable	$ 1,850	$ 2,236
FUND BALANCE		
Restricted	1,342	1,453
Total liabilities and fund balance	$ 3,192	$ 3,689

LINCOLN COUNTY, NEVADA
NONMAJOR GENETIC MARKER TESTING SPECIAL REVENUE FUND
SCHEDULE OF REVENUES, EXPENDITURES, AND CHANGES
IN FUND BALANCE - BUDGET (GAAP BASIS) AND ACTUAL
Year Ended June 30, 2018
(With Comparative Actual Amounts for Year Ended June 30, 2017)

	2018 Budget	2018 Actual	Variance - Positive (Negative)	2017 Actual
Revenues:				
Charges for services:				
Other	$ 12,000	$ 12,227	$ 227	$ 12,829
Expenditures:				
Current:				
General government:				
Services and supplies	12,000	12,338	(338)	11,376
Excess (deficiency) of revenues over expenditures	-	(111)	(111)	1,453
Fund balance:				
Beginning of year	-	1,453	1,453	-
End of year	$ -	$ 1,342	$ 1,342	$ 1,453

LINCOLN COUNTY, NEVADA
NONMAJOR PUBLIC IMPROVEMENT SPECIAL REVENUE FUND
COMPARATIVE BALANCE SHEETS
June 30, 2018 and 2017

	2018	2017
ASSETS		
Pooled cash and investments	$ 142,335	$ 142,203
Interest receivable	254	334
Total assets	$ 142,589	$ 142,537
FUND BALANCE		
Restricted	$ 142,589	$ 142,537

LINCOLN COUNTY, NEVADA
NONMAJOR PUBLIC IMPROVEMENT SPECIAL REVENUE FUND
SCHEDULE OF REVENUES, EXPENDITURES, AND CHANGES
IN FUND BALANCE - BUDGET (GAAP BASIS) AND ACTUAL
Year Ended June 30, 2018
(With Comparative Actual Amounts for Year Ended June 30, 2017)

	2018		Variance - Positive	2017
	Budget	Actual	(Negative)	Actual
Revenues:				
Miscellaneous:				
Interest	$ -	$ 52	$ 52	$ 263
Expenditures:				
Current:				
Public works:				
Services and supplies	142,274	-	142,274	-
Excess (deficiency) of revenues over expenditures	(142,274)	52	142,326	263
Fund balance:				
Beginning of year	142,274	142,537	263	142,274
End of year	$ -	$ 142,589	$ 142,589	$ 142,537

LINCOLN COUNTY, NEVADA
NONMAJOR AIRPORT SPECIAL REVENUE FUND
COMPARATIVE BALANCE SHEETS
June 30, 2018 and 2017

	2018	2017
ASSETS		
Pooled cash and investments	$ 259	$ 10,691
Due from other governments	120	-
Total assets	$ 379	$ 10,691
LIABILITIES		
Accounts payable	$ 648	$ 10,665
FUND BALANCE		
Committed	(269)	26
Total liabilities and fund balance	$ 379	$ 10,691

LINCOLN COUNTY, NEVADA
NONMAJOR AIRPORT SPECIAL REVENUE FUND
SCHEDULE OF REVENUES, EXPENDITURES, AND CHANGES IN FUND BALANCE - BUDGET (GAAP BASIS) AND ACTUAL
Year Ended June 30, 2018
(With Comparative Actual Amounts for Year Ended June 30, 2017)

	2018 Budget	2018 Actual	Variance - Positive (Negative)	2017 Actual
Revenues:				
Charges for services:				
Airport fees	$ 400	$ 1,180	$ 780	$ 887
Miscellaneous:				
Rents	9,100	7,318	(1,782)	17,563
Total revenues	9,500	8,498	(1,002)	18,450
Expenditures:				
Current:				
Public works:				
Employee benefits	400	493	(93)	448
Services and supplies	9,400	8,300	1,100	10,760
Capital outlay	-	-	-	9,855
Total expenditures	9,800	8,793	1,007	21,063
Excess (deficiency) of revenues over expenditures	(300)	(295)	5	(2,613)
Fund balance:				
Beginning of year	439	26	(413)	2,639
End of year	$ 139	$ (269)	$ (408)	$ 26

LINCOLN COUNTY, NEVADA
NONMAJOR PANACA TOWN BUILDING SPECIAL REVENUE FUND
COMPARATIVE BALANCE SHEETS
June 30, 2018 and 2017

	2018	2017
ASSETS		
Pooled cash and investments	$ 44,706	$ 34,122
Interest receivable	82	80
Total assets	$ 44,788	$ 34,202
LIABILITIES		
Accounts payable	$ -	$ -
FUND BALANCE		
Committed	44,788	34,202
Total liabilities and fund balance	$ 44,788	$ 34,202

LINCOLN COUNTY, NEVADA
NONMAJOR PANACA TOWN BUILDING SPECIAL REVENUE FUND
SCHEDULE OF REVENUES, EXPENDITURES, AND CHANGES
IN FUND BALANCE - BUDGET (GAAP BASIS) AND ACTUAL
Year Ended June 30, 2018
(With Comparative Actual Amounts for Year Ended June 30, 2017)

	2018 Budget	2018 Actual	Variance - Positive (Negative)	2017 Actual
Revenues:				
Miscellaneous:				
Rent	$ 9,400	$ 10,569	$ 1,169	$ 10,569
Investment income	-	17	17	72
Total revenues	9,400	10,586	1,186	10,641
Expenditures:				
Current:				
General government:				
Services and supplies	-	-	-	4,367
Capital outlay	15,000	-	15,000	-
Total expenditures	15,000	-	15,000	4,367
Excess (deficiency) of revenues over expenditures	(5,600)	10,586	16,186	6,274
Fund balance:				
Beginning of year	18,988	34,202	15,214	27,928
End of year	$ 13,388	$ 44,788	$ 31,400	$ 34,202

LINCOLN COUNTY, NEVADA
NONMAJOR COURT FACILITY FEES SPECIAL REVENUE FUND
COMPARATIVE BALANCE SHEETS
June 30, 2018 and 2017

	2018	2017
ASSETS		
Pooled cash and investments	$ 71,427	$ 130,892
Interest receivable	113	299
Total assets	$ 71,540	$ 131,191
LIABILITIES		
Accounts payable	$ 2,500	$ -
FUND BALANCE		
Restricted	69,040	131,191
Total liabilities and fund balance	$ 71,540	$ 131,191

LINCOLN COUNTY, NEVADA
NONMAJOR COURT FACILITY FEES SPECIAL REVENUE FUND
SCHEDULE OF REVENUES, EXPENDITURES, AND CHANGES
IN FUND BALANCE - BUDGET (GAAP BASIS) AND ACTUAL
Year Ended June 30, 2018
(With Comparative Actual Amounts for Year Ended June 30, 2017)

	2018 Budget	2018 Actual	Variance - Positive (Negative)	2017 Actual
Revenues:				
Charges for services:				
Other	$ 45,000	$ 40,011	$ (4,989)	$ 38,062
Miscellaneous:				
Investment income	-	25	25	286
Total revenues	45,000	40,036	(4,964)	38,348
Expenditures:				
Current:				
Judicial:				
Service and supplies	-	-	-	10,586
Capital outlay	163,429	102,187	61,242	-
Total expenditures	163,429	102,187	61,242	10,586
Excess (deficiency) of revenues over expenditures	(118,429)	(62,151)	56,278	27,762
Fund balance:				
Beginning of year	118,429	131,191	12,762	103,429
End of year	$ -	$ 69,040	$ 69,040	$ 131,191

LINCOLN COUNTY, NEVADA
NONMAJOR TRI-COUNTY WEED CONTROL SPECIAL REVENUE FUND
COMPARATIVE BALANCE SHEETS
June 30, 2018 and June 30, 2017

	2018	2017
ASSETS		
Pooled cash and investments	$ 249,375	$ 235,570
Interest receivable	399	552
Due from other governments	-	3,721
Total assets	$ 249,774	$ 239,843
LIABILITIES		
Accounts payable	$ 26,503	$ 27,539
Accrued payroll and benefits	32,433	24,066
Total liabilities	58,936	51,605
FUND BALANCE		
Restricted	190,838	188,238
Total liabilities and fund balance	$ 249,774	$ 239,843

LINCOLN COUNTY, NEVADA
NONMAJOR TRI-COUNTY WEED CONTROL SPECIAL REVENUE FUND
SCHEDULE OF REVENUES, EXPENDITURES, AND CHANGES
IN FUND BALANCE - BUDGET (GAAP BASIS) AND ACTUAL
Year Ended June 30, 2018
(With Comparative Actual Amounts for Year Ended June 30, 2017)

	2018		Variance - Positive	2017
	Budget	Actual	(Negative)	Actual
Revenues:				
Charges for services:				
Weed control	$ 1,100,000	$ 789,559	$ (310,441)	$ 797,614
Miscellaneous:				
Investment income	400	82	(318)	77
Total revenues	1,100,400	789,641	(310,759)	797,691
Expenditures:				
Current:				
General government:				
Salaries and wages	409,150	301,082	108,068	360,931
Employee benefits	150,387	102,808	47,579	122,219
Services and supplies	550,000	358,820	191,180	369,658
Capital outlay	150,000	24,331	125,669	125,085
Total expenditures	1,259,537	787,041	472,496	977,893
Excess (deficiency) of revenues over expenditures	(159,137)	2,600	161,737	(180,202)
Fund balance:				
Beginning of year	192,235	188,238	(3,997)	368,440
End of year	$ 33,098	$ 190,838	$ 157,740	$ 188,238

LINCOLN COUNTY, NEVADA
NONMAJOR LINCOLN COUNTY LAND ACT
GENERAL SPECIAL REVENUE FUND
COMPARATIVE BALANCE SHEETS
June 30, 2018 and 2017

	2018	2017
ASSETS		
Pooled cash and investments	$ 6,566	$ 6,558
Interest receivable	9	15
Total assets	$ 6,575	$ 6,573
FUND BALANCE		
Committed	$ 6,575	$ 6,573

LINCOLN COUNTY, NEVADA
NONMAJOR LINCOLN COUNTY LAND ACT
GENERAL SPECIAL REVENUE FUND
SCHEDULE OF REVENUES, EXPENDITURES, AND CHANGES IN FUND BALANCE - BUDGET (GAAP BASIS) AND ACTUAL
Year Ended June 30, 2018
(With Comparative Actual Amounts for Year Ended June 30, 2017)

	2018		Variance - Positive	2017
	Budget	Actual	(Negative)	Actual
Revenues:				
Miscellaneous:				
Investment income	$ -	$ 2	$ 2	$ 12
Expenditures:				
Current:				
General government:				
Services and supplies	6,561	-	6,561	-
Excess (deficiency) of revenues over expenditures	(6,561)	2	6,563	12
Fund balance:				
Beginning of year	6,561	6,573	12	6,561
End of year	$ -	$ 6,575	$ 6,575	$ 6,573

LINCOLN COUNTY, NEVADA
NONMAJOR LINCOLN COUNTY LAND ACT
PLANNING AND DEVELOPMENT SPECIAL REVENUE FUND
COMPARATIVE BALANCE SHEETS
June 30, 2018 and 2017

	2018	2017
ASSETS		
Pooled cash and investments	$ 668	$ 666
Interest receivable	-	2
Total assets	$ 668	$ 668
LIABILITIES		
Accounts payable	$ -	$ -
FUND BALANCE		
Committed	668	668
Total liabilities and fund balance	$ 668	$ 668

LINCOLN COUNTY, NEVADA
NONMAJOR LINCOLN COUNTY LAND ACT
PLANNING AND DEVELOPMENT SPECIAL REVENUE FUND
SCHEDULE OF REVENUES, EXPENDITURES, AND CHANGES
IN FUND BALANCE - BUDGET (GAAP BASIS) AND ACTUAL
Year Ended June 30, 2018
(With Comparative Actual Amounts for Year Ended June 30, 2017)

	2018		Variance - Positive	2017
	Budget	Actual	(Negative)	Actual
Revenues:				
Miscellaneous:				
Investment income	$ -	$ -	$ -	$ (169)
Expenditures:				
Current:				
General government:				
Services and supplies	-	-	-	-
Excess (deficiency) of revenues over expenditures	-	-	-	(169)
Other financing sources (uses):				
Operating transfers in	-	-	-	600
Operating transfers out	-	-	-	(213,543)
Total other financing sources (uses)	-	-	-	(212,943)
Net change in fund balance	-	-	-	(213,112)
Fund balance:				
Beginning of year	337	668	331	213,780
End of year	$ 337	$ 668	$ 331	$ 668

LINCOLN COUNTY, NEVADA
NONMAJOR LINCOLN COUNTY LAND ACT
EDUCATION SPECIAL REVENUE FUND
COMPARATIVE BALANCE SHEETS
June 30, 2018 and 2017

	2018	2017
ASSETS		
Pooled cash and investments	$ 124,582	$ 124,463
Interest receivable	219	292
Total assets	$ 124,801	$ 124,755
LIABILITIES		
Accounts payable	$ -	$ -
FUND BALANCE		
Committed	124,801	124,755
Total liabilities and fund balance	$ 124,801	$ 124,755

LINCOLN COUNTY, NEVADA
NONMAJOR LINCOLN COUNTY LAND ACT
EDUCATION SPECIAL REVENUE FUND
SCHEDULE OF REVENUES, EXPENDITURES, AND CHANGES
IN FUND BALANCE - BUDGET (GAAP BASIS) AND ACTUAL
Year Ended June 30, 2018
(With Comparative Actual Amounts for Year Ended June 30, 2017)

	2018			2017
	Budget	Actual	Variance - Positive (Negative)	Actual
Revenues:				
Miscellaneous:				
Investment income	$ -	$ 46	$ 46	$ 230
Expenditures:				
Current:				
General government:				
Services and supplies	124,525	-	124,525	-
Excess (deficiency) of revenues over expenditures	(124,525)	46	124,571	230
Fund balance:				
Beginning of year	124,525	124,755	230	124,525
End of year	$ -	$ 124,801	$ 124,801	$ 124,755

LINCOLN COUNTY, NEVADA
NONMAJOR LINCOLN COUNTY LAND ACT
GRANT MATCH SPECIAL REVENUE FUND
COMPARATIVE BALANCE SHEETS
June 30, 2018 and 2017

	2018	2017
ASSETS		
Pooled cash and investments	$ 151	$ 151
FUND BALANCE		
Committed	$ 151	$ 151

LINCOLN COUNTY, NEVADA
NONMAJOR LINCOLN COUNTY LAND ACT
GRANT MATCH SPECIAL REVENUE FUND
SCHEDULE OF REVENUES, EXPENDITURES, AND CHANGES
IN FUND BALANCE - BUDGET (GAAP BASIS) AND ACTUAL
Year Ended June 30, 2018
(With Comparative Actual Amounts for Year Ended June 30, 2017)

	2018			
	Budget	Actual	Variance - Positive (Negative)	2017 Actual
Revenues:				
Miscellaneous:				
Investment income	$ -	$ -	$ -	$ -
Expenditures:				
Current:				
General government:				
Services and supplies	151	-	151	-
Excess (deficiency) of revenues over expenditures	(151)	-	151	-
Fund balance:				
Beginning of year	151	151	-	151
End of year	$ -	$ 151	$ 151	$ 151

LINCOLN COUNTY, NEVADA
NONMAJOR LINCOLN COUNTY WATER
GENERAL SPECIAL REVENUE FUND
COMPARATIVE BALANCE SHEETS
June 30, 2018 and 2017

	2018	2017
ASSETS		
Pooled cash and investments	$ 604	$ 604
Interest receivable	4	2
Total assets	$ 608	$ 606
LIABILITIES		
Accounts payable	$ -	$ -
FUND BALANCE		
Committed	608	606
Total liabilities and fund balance	$ 608	$ 606

LINCOLN COUNTY, NEVADA
NONMAJOR LINCOLN COUNTY WATER
GENERAL SPECIAL REVENUE FUND
SCHEDULE OF REVENUES, EXPENDITURES, AND CHANGES
IN FUND BALANCE - BUDGET (GAAP BASIS) AND ACTUAL
Year Ended June 30, 2018
(With Comparative Actual Amounts for Year Ended June 30, 2017)

	2018			
	Budget	Actual	Variance - Positive (Negative)	2017 Actual
Revenues:				
Miscellaneous:				
Investment income	$ -	$ 2	$ 2	$ (143)
Expenditures:				
Current:				
General government:				
Services and supplies	-	-	-	-
Excess (deficiency) of revenues over expenditures	-	2	2	(143)
Other financing sources (uses):				
Operating transfers out	-	-	-	(197,762)
Net change in fund balance	-	2	2	(197,905)
Fund balance:				
Beginning of year	849	606	(243)	198,511
End of year	$ 849	$ 608	$ (241)	$ 606

LINCOLN COUNTY, NEVADA
NONMAJOR LINCOLN COUNTY WATER
SPECIAL PROJECTS SPECIAL REVENUE FUND
COMPARATIVE BALANCE SHEETS
June 30, 2018 and 2017

	2018	2017
ASSETS		
Pooled cash and investments	$ 8,384	$ 8,376
Interest receivable	14	19
Total assets	$ 8,398	$ 8,395
FUND BALANCE		
Committed	$ 8,398	$ 8,395

LINCOLN COUNTY, NEVADA
NONMAJOR LINCOLN COUNTY WATER
SPECIAL PROJECTS SPECIAL REVENUE FUND
SCHEDULE OF REVENUES, EXPENDITURES, AND CHANGES
IN FUND BALANCE - BUDGET (GAAP BASIS) AND ACTUAL
Year Ended June 30, 2018
(With Comparative Actual Amounts for Year Ended June 30, 2017)

	2018		Variance - Positive	2017
	Budget	Actual	(Negative)	Actual
Revenues:				
Miscellaneous:				
Investment income	$ -	$ 3	$ 3	$ 15
Expenditures:				
Current:				
General government:				
Services and supplies	8,380	-	8,380	-
Excess (deficiency) of revenues over expenditures	(8,380)	3	8,383	15
Fund balance:				
Beginning of year	8,380	8,395	15	8,380
End of year	$ -	$ 8,398	$ 8,398	$ 8,395

LINCOLN COUNTY, NEVADA
NONMAJOR LINCOLN COUNTY WATER
PLANNING AND DEVELOPMENT SPECIAL REVENUE FUND
COMPARATIVE BALANCE SHEETS
June 30, 2018 and 2017

	2018	2017
ASSETS		
Pooled cash and investments	$ 83,166	$ 83,089
Interest receivable	148	195
Total assets	$ 83,314	$ 83,284
FUND BALANCE		
Committed	$ 83,314	$ 83,284

LINCOLN COUNTY, NEVADA
NONMAJOR LINCOLN COUNTY WATER
PLANNING AND DEVELOPMENT SPECIAL REVENUE FUND
SCHEDULE OF REVENUES, EXPENDITURES, AND CHANGES
IN FUND BALANCE - BUDGET (GAAP BASIS) AND ACTUAL
Year Ended June 30, 2018
(With Comparative Actual Amounts for Year Ended June 30, 2017)

	2018			
	Budget	Actual	Variance - Positive (Negative)	2017 Actual
Revenues:				
Miscellaneous:				
Investment income	$ 50	$ 30	$ (20)	$ 141
Expenditures:				
Current:				
General government:				
Services and supplies	-	-	-	-
Excess (deficiency) of revenues over expenditures	50	30	(20)	141
Other financing sources (uses):				
Operating transfers out	-	-	-	(7,998)
Net change in fund balance	50	30	(20)	(7,857)
Fund balance:				
Beginning of year	385	83,284	82,899	91,141
End of year	$ 435	$ 83,314	$ 82,879	$ 83,284

LINCOLN COUNTY, NEVADA
NONMAJOR LINCOLN COUNTY WATER SPECIAL USE SPECIAL REVENUE FUND
COMPARATIVE BALANCE SHEETS
June 30, 2018 and 2017

	2018	2017
ASSETS		
Pooled cash and investments	$ 1,163,802	$ 1,152,736
Interest receivable	2,064	2,705
Interfund receivable	190,000	200,000
Total assets	$ 1,355,866	$ 1,355,441
FUND BALANCE		
Committed	$ 1,355,866	$ 1,355,441

LINCOLN COUNTY, NEVADA
NONMAJOR LINCOLN COUNTY WATER SPECIAL USE SPECIAL REVENUE FUND
SCHEDULE OF REVENUES, EXPENDITURES, AND CHANGES
IN FUND BALANCE - BUDGET (GAAP BASIS) AND ACTUAL
Year Ended June 30, 2018
(With Comparative Actual Amounts for Year Ended June 30, 2017)

	2018		Variance - Positive	2017
	Budget	Actual	(Negative)	Actual
Revenues:				
Miscellaneous:				
Investment income	$ 500	$ 425	$ (75)	$ 1,728
Expenditures:				
Current:				
General government:				
Services and supplies	1,354,713	-	1,354,713	-
Excess (deficiency) of revenues over expenditures	(1,354,213)	425	1,354,638	1,728
Fund balance:				
Beginning of year	1,354,213	1,355,441	1,228	1,353,713
End of year	$ -	$ 1,355,866	$ 1,355,866	$ 1,355,441

LINCOLN COUNTY, NEVADA
NONMAJOR LINCOLN COUNTY WATER
GRANT MATCH SPECIAL REVENUE FUND
COMPARATIVE BALANCE SHEETS
June 30, 2018 and 2017

	2018	2017
ASSETS		
Pooled cash and investments	$ 83,104	$ 83,027
Interest receivable	149	195
Total assets	$ 83,253	$ 83,222
FUND BALANCE		
Committed	$ 83,253	$ 83,222

LINCOLN COUNTY, NEVADA
NONMAJOR LINCOLN COUNTY WATER
GRANT MATCH SPECIAL REVENUE FUND
SCHEDULE OF REVENUES, EXPENDITURES, AND CHANGES
IN FUND BALANCE - BUDGET (GAAP BASIS) AND ACTUAL
Year Ended June 30, 2018
(With Comparative Actual Amounts for Year Ended June 30, 2017)

	2018 Budget	2018 Actual	Variance - Positive (Negative)	2017 Actual
Revenues:				
Miscellaneous:				
Investment income	$ 50	$ 31	$ (19)	$ 153
Expenditures:				
Current:				
General government:				
Services and supplies	83,169	-	83,169	-
Excess (deficiency) of revenues over expenditures	(83,119)	31	83,150	153
Fund balance:				
Beginning of year	83,119	83,222	103	83,069
End of year	$ -	$ 83,253	$ 83,253	$ 83,222

LINCOLN COUNTY, NEVADA
NONMAJOR LINCOLN COUNTY WATER DISTRICT
GENERAL SPECIAL REVENUE FUND
COMPARATIVE BALANCE SHEETS
June 30, 2018 and 2017

	2018	2017
ASSETS		
Pooled cash and investments	$ 433,593	$ 488,707
Interest receivable	820	735
Total assets	$ 434,413	$ 489,442
LIABILITIES		
Accounts payable	$ 2,164	$ 3,848
Accrued payroll and benefits	5,800	5,066
Total liabilities	7,964	8,914
FUND BALANCE		
Committed	426,449	480,528
Total liabilities and fund balance	$ 434,413	$ 489,442

LINCOLN COUNTY, NEVADA
NONMAJOR LINCOLN COUNTY WATER DISTRICT
GENERAL SPECIAL REVENUE FUND
SCHEDULE OF REVENUES, EXPENDITURES, AND CHANGES IN FUND BALANCE - BUDGET (GAAP BASIS) AND ACTUAL
Year Ended June 30, 2018
(With Comparative Actual Amounts for Year Ended June 30, 2017)

	2018 Budget	2018 Actual	Variance - Positive (Negative)	2017 Actual
Revenues:				
Miscellaneous:				
Other - water sales	$ -	$ -	$ -	$ 106,060
Investment income	-	(585)	(585)	(2,265)
Total revenues	-	(585)	(585)	103,795
Expenditures:				
Current:				
General government:				
Salaries and wages	90,000	81,797	8,203	82,132
Employee benefits	37,000	35,104	1,896	34,516
Services and supplies	112,000	36,593	75,407	32,741
Total general government	239,000	153,494	85,506	149,389
Excess (deficiency) of revenues over expenditures	(239,000)	(154,079)	84,921	(45,594)
Other financing sources (uses):				
Operating transfers in	100,000	100,000	-	-
Net change in fund balance	(139,000)	(54,079)	84,921	(45,594)
Fund balance:				
Beginning of year	167,210	480,528	313,318	526,122
End of year	$ 28,210	$ 426,449	$ 398,239	$ 480,528

LINCOLN COUNTY, NEVADA
NONMAJOR LINCOLN COUNTY WATER DISTRICT
PLANNING & DEVELOPMENT SPECIAL REVENUE FUND
COMPARATIVE BALANCE SHEETS
June 30, 2018 and 2017

	2018	2017
ASSETS		
Pooled cash and investments	$ 882,957	$ 890,689
Interest receivable	3,051	2,750
Total assets	$ 886,008	$ 893,439
LIABILITIES		
Accounts payable	$ 9,225	$ -
FUND BALANCE		
Committed	876,783	893,439
Total liabilities and fund balance	$ 886,008	$ 893,439

LINCOLN COUNTY, NEVADA
NONMAJOR LINCOLN COUNTY WATER DISTRICT
PLANNING & DEVELOPMENT SPECIAL REVENUE FUND
SCHEDULE OF REVENUES, EXPENDITURES, AND CHANGES IN FUND BALANCE - BUDGET (GAAP BASIS) AND ACTUAL
Year Ended June 30, 2018
(With Comparative Actual Amounts for Year Ended June 30, 2017)

	2018 Budget	2018 Actual	Variance - Positive (Negative)	2017 Actual
Revenues:				
Miscellaneous:				
Investment income	$ 10,000	$ (2,189)	$ (12,189)	$ (8,472)
Expenditures:				
Current:				
General government:				
Services and supplies	921,911	14,467	907,444	-
Excess (deficiency) of revenues over expenditures	(911,911)	(16,656)	895,255	(8,472)
Fund balance:				
Beginning of year	911,911	893,439	(18,472)	901,911
End of year	$ -	$ 876,783	$ 876,783	$ 893,439

LINCOLN COUNTY, NEVADA
NONMAJOR LINCOLN COUNTY WATER DISTRICT
SPECIAL PROJECTS SPECIAL REVENUE FUND
COMPARATIVE BALANCE SHEETS
June 30, 2018 and 2017

	2018	2017
ASSETS		
Pooled cash and investments	$ 643,796	$ 655,304
Interest receivable	2,162	1,969
Prepaid expenses	48,000	56,000
Total assets	$ 693,958	$ 713,273
LIABILITIES		
Accounts payable	$ -	$ -
FUND BALANCE		
Nonspendable	48,000	56,000
Committed	645,958	657,273
Total fund balance	693,958	713,273
Total liabilities and fund balance	$ 693,958	$ 713,273

LINCOLN COUNTY, NEVADA
NONMAJOR LINCOLN COUNTY WATER DISTRICT
SPECIAL PROJECTS SPECIAL REVENUE FUND
SCHEDULE OF REVENUES, EXPENDITURES, AND CHANGES IN FUND BALANCE - BUDGET (GAAP BASIS) AND ACTUAL
Year Ended June 30, 2018
(With Comparative Actual Amounts for Year Ended June 30, 2017)

	2018 Budget	2018 Actual	Variance - Positive (Negative)	2017 Actual
Revenues:				
Miscellaneous:				
Investment income	$ 6,000	$ (1,315)	$ (7,315)	$ (5,852)
Expenditures:				
Current:				
General government:				
Services and supplies	739,125	18,000	721,125	8,000
Excess (deficiency) of revenues over expenditures	(733,125)	(19,315)	713,810	(13,852)
Fund balance:				
Beginning of year	733,125	713,273	(19,852)	727,125
End of year	$ -	$ 693,958	$ 693,958	$ 713,273

LINCOLN COUNTY, NEVADA
NONMAJOR ASSESSOR TECHNOLOGY SPECIAL REVENUE FUND
COMPARATIVE BALANCE SHEETS
June 30, 2018 and 2017

	2018	2017
ASSETS		
Pooled cash and investments	$ 44,605	$ 62,670
FUND BALANCE		
Restricted	$ 44,605	$ 62,670

LINCOLN COUNTY, NEVADA
NONMAJOR ASSESSOR TECHNOLOGY SPECIAL REVENUE FUND
SCHEDULE OF REVENUES, EXPENDITURES, AND CHANGES
IN FUND BALANCE - BUDGET (GAAP BASIS) AND ACTUAL
Year Ended June 30, 2018
(With Comparative Actual Amounts for Year Ended June 30, 2017)

	2018 Budget	2018 Actual	Variance - Positive (Negative)	2017 Actual
Revenues:				
Charges for services:				
Other	$ 18,000	$ 10,164	$ (7,836)	$ 10,443
Expenditures:				
Current:				
General government:				
Services and supplies	75,403	9,026	66,377	18,433
Capital outlay	-	19,203	(19,203)	-
Total general government	75,403	28,229	47,174	18,433
Excess (deficiency) of revenues over expenditures	(57,403)	(18,065)	39,338	(7,990)
Fund balance:				
Beginning of year	57,403	62,670	5,267	70,660
End of year	$ -	$ 44,605	$ 44,605	$ 62,670

LINCOLN COUNTY, NEVADA
NONMAJOR DISTRICT COURT TECHNOLOGY SPECIAL REVENUE FUND
COMPARATIVE BALANCE SHEETS
June 30, 2018 and 2017

	2018	2017
ASSETS		
Pooled cash and investments	$ 5,120	$ 5,120
FUND BALANCE		
Restricted	$ 5,120	$ 5,120

LINCOLN COUNTY, NEVADA
NONMAJOR DISTRICT COURT TECHNOLOGY SPECIAL REVENUE FUND
SCHEDULE OF REVENUES, EXPENDITURES, AND CHANGES
IN FUND BALANCE - BUDGET (GAAP BASIS) AND ACTUAL
Year Ended June 30, 2018
(With Comparative Actual Amounts for Year Ended June 30, 2017)

	2018		Variance - Positive	2017
	Budget	Actual	(Negative)	Actual
Revenues:				
Charges for services:	$ -	$ -	$ -	$ 32
Expenditures:				
Current:				
Judicial:				
Services and supplies	5,088	-	5,088	-
Excess (deficiency) of revenues over expenditures	(5,088)	-	5,088	32
Fund balance:				
Beginning of year	5,088	5,120	32	5,088
End of year	$ -	$ 5,120	$ 5,120	$ 5,120

LINCOLN COUNTY, NEVADA
NONMAJOR DISTRICT COURT SPECIALTY COURT SPECIAL REVENUE FUND
COMPARATIVE BALANCE SHEETS
June 30, 2018 and 2017

	2018	2017
ASSETS		
Pooled cash and investments	$ 12,248	$ 22,317
LIABILITIES		
Accounts payable	$ 2,272	$ 1,356
FUND BALANCE		
Restricted	9,976	20,961
Total liabilities and fund balance	$ 12,248	$ 22,317

LINCOLN COUNTY, NEVADA
NONMAJOR DISTRICT COURT SPECIALTY COURT SPECIAL REVENUE FUND
SCHEDULE OF REVENUES, EXPENDITURES, AND CHANGES
IN FUND BALANCE - BUDGET (GAAP BASIS) AND ACTUAL
Year Ended June 30, 2018
(With Comparative Actual Amounts for Year Ended June 30, 2017)

	2018		Variance-Positive	2017
	Budget	Actual	(Negative)	Actual
Revenues:				
Charges for services:				
Clerk fees	$ 20,463	$ 4,891	$ (15,572)	$ 14,635
Expenditures:				
Judicial:				
Services and supplies	34,719	15,876	18,843	22,043
Excess (deficiency) of revenues over expenditures	(14,256)	(10,985)	3,271	(7,408)
Fund balance:				
Beginning of year	14,256	20,961	6,705	28,369
End of year	$ -	$ 9,976	$ 9,976	$ 20,961

LINCOLN COUNTY, NEVADA
NONMAJOR COURT SECURITY FEE SPECIAL REVENUE FUND
COMPARATIVE BALANCE SHEETS
June 30, 2018 and 2017

	2018	2017
ASSETS		
Pooled cash and investments	$ 9,690	$ 8,664
Interest receivable	17	20
Total assets	$ 9,707	$ 8,684
FUND BALANCE		
Restricted	$ 9,707	$ 8,684

LINCOLN COUNTY, NEVADA
NONMAJOR COURT SECURITY FEE SPECIAL REVENUE FUND
SCHEDULE OF REVENUES, EXPENDITURES, AND CHANGES
IN FUND BALANCE - BUDGET (GAAP BASIS) AND ACTUAL
Year Ended June 30, 2018
(With Comparative Actual Amounts for Year Ended June 30, 2017)

	2018			2017
	Budget	Actual	Variance-Positive (Negative)	
Revenues:				
Charges for services:				
Clerk fees	$ 700	$ 1,020	$ 320	$ 1,020
Miscellaneous:				
Investment income	-	3	3	18
Total revenues	700	1,023	323	1,038
Expenditures:				
Judicial:				
Services and supplies	9,046	-	9,046	-
Excess (deficiency) of revenues over expenditures	(8,346)	1,023	9,369	1,038
Fund balance:				
Beginning of year	8,346	8,684	338	7,646
End of year	$ -	$ 9,707	$ 9,707	$ 8,684

LINCOLN COUNTY, NEVADA
NONMAJOR DISTRICT COURT ENRICHMENT SPECIAL REVENUE FUND
COMPARATIVE BALANCE SHEETS
June 30, 2018 and 2017

	2018	2017
ASSETS		
Pooled cash and investments	$ 43,591	$ 37,751
Interest receivable	78	87
Total assets	$ 43,669	$ 37,838
FUND BALANCE		
Restricted	$ 43,669	$ 37,838

LINCOLN COUNTY, NEVADA
NONMAJOR DISTRICT COURT ENRICHMENT SPECIAL REVENUE FUND
SCHEDULE OF REVENUES, EXPENDITURES, AND CHANGES
IN FUND BALANCE - BUDGET (GAAP BASIS) AND ACTUAL
Year Ended June 30, 2018
(With Comparative Actual Amounts for Year Ended June 30, 2017)

	2018			2017
	Budget	Actual	Variance-Positive (Negative)	
Revenues:				
Charges for services:				
Clerk fees	$ 3,500	$ 5,815	$ 2,315	$ 6,038
Miscellaneous:				
Investment income	-	16	16	75
Total revenues	3,500	5,831	2,331	6,113
Expenditures:				
Current:				
Judicial:				
Services and supplies	41,077	-	41,077	-
Capital outlay	-	-	-	2,352
Total expenditures	41,077	-	41,077	2,352
Excess (deficiency) of revenues over expenditures	(37,577)	5,831	43,408	3,761
Fund balance:				
Beginning of year	37,577	37,838	261	34,077
End of year	$ -	$ 43,669	$ 43,669	$ 37,838

LINCOLN COUNTY, NEVADA
NONMAJOR FUND - NUCLEAR WASTE SPECIAL REVENUE FUND
COMPARATIVE BALANCE SHEETS
June 30, 2018 and 2017

	2018	2017
ASSETS		
Pooled cash and investments	$ 2,099	$ 36,870
Interest receivable	3	87
Total assets	$ 2,102	$ 36,957
LIABILITIES		
Accounts payable	$ 1,100	$ 643
Accrued payroll and benefits	-	2,806
Unearned revenue	1,002	33,508
Total liabilities	2,102	36,957
FUND BALANCE		
Restricted	-	-
Total liabilities and fund balance	$ 2,102	$ 36,957

LINCOLN COUNTY, NEVADA
NONMAJOR FUND - NUCLEAR WASTE SPECIAL REVENUE FUND
SCHEDULE OF REVENUES, EXPENDITURES, AND CHANGES
IN FUND BALANCE - BUDGET (GAAP BASIS) AND ACTUAL
Year Ended June 30, 2018
(With Comparative Actual Amounts for Year Ended June 30, 2017)

	2018 Budget	2018 Actual	Variance - Positive (Negative)	2017 Actual
Revenues:				
Intergovernmental:				
Grants	$ -	$ 32,506	$ 32,506	$ 36,561
Miscellaneous:				
Investment income	-	1	1	-
Total revenues	-	32,507	32,507	36,561
Expenditures:				
Current:				
General government:				
Salaries and wages	25,000	15,309	9,691	36,741
Employee benefits	-	9,014	(9,014)	21,532
Services and supplies	11,784	8,184	3,600	13,288
Total expenditures	36,784	32,507	4,277	71,561
Excess (deficiency) of revenues over expenditures	(36,784)	-	36,784	(35,000)
Other financing sources (uses):				
Operating transfers in:				
Federal in lieu	-	-	-	35,000
Net change in fund balance	(36,784)	-	36,784	-
Fund balance:				
Beginning of year	36,784	-	(36,784)	-
End of year	$ -	$ -	$ -	$ -

LINCOLN COUNTY, NEVADA
NONMAJOR FUND - PROPERTY MANAGEMENT SPECIAL REVENUE FUND
COMPARATIVE BALANCE SHEETS
June 30, 2018 and 2017

	2018	2017
ASSETS		
Pooled cash and investments	$ 59,808	$ 56,419
LIABILITIES		
Accounts payable	$ 3,874	$ 7,150
Accrued payroll and benefits	676	518
Total liabilities	4,550	7,668
FUND BALANCE		
Committed for general government	55,258	48,751
Total liabilities and fund balance	$ 59,808	$ 56,419

LINCOLN COUNTY, NEVADA
NONMAJOR FUND - PROPERTY MANAGEMENT SPECIAL REVENUE FUND
SCHEDULE OF REVENUES, EXPENDITURES, AND CHANGES
IN FUND BALANCE - BUDGET (GAAP BASIS) AND ACTUAL
Year Ended June 30, 2018
(With Comparative Actual Amounts for Year Ended June 30, 2017)

	2018		Variance-Positive	2017
	Budget	Actual	(Negative)	Actual
Revenues:				
Miscellaneous:				
Rent	$ 18,000	$ 15,585	$ (2,415)	$ 18,705
Expenditures:				
General government:				
Salaries and wages	22,318	17,415	4,903	14,409
Employee benefits	5,604	3,230	2,374	2,263
Services and supplies	35,280	28,433	6,847	20,487
Total expenditures	63,202	49,078	14,124	37,159
Excess (deficiency) of revenues over expenditures	(45,202)	(33,493)	11,709	(18,454)
Other financing sources (uses):				
Operating transfer in	40,000	40,000	-	40,000
Net change in fund balance	(5,202)	6,507	11,709	21,546
Fund balance:				
Beginning of year	34,456	48,751	14,295	27,205
End of year	$ 29,254	$ 55,258	$ 26,004	$ 48,751

LINCOLN COUNTY, NEVADA
INTERNALLY REPORTED (BUDGETARY BASIS) FUNDS REPORTED AS PART OF THE GENERAL FUND FOR EXTERNAL REPORTING PURPOSES
COMBINING BALANCE SHEET
JUNE 30, 2018
(With Comparative Actual Amounts for 2017)

	Stabilization	Planning	Rachel Jones Memorial Cemetery	Flood Control
ASSETS				
Pooled cash and investments	$ 130,674	$ 35,365	$ 827	$ 40,825
Interest receivable	230	61	-	-
Due from others	-	-	-	-
Total assets	$ 130,904	$ 35,426	$ 827	$ 40,825
LIABILITIES				
Accounts payable	$ -	$ 6,237	$ -	$ -
Accrued payroll and benefits	-	2,068	-	-
Total liabilities	-	8,305	-	-
FUND BALANCE				
Restricted for:				
Stabilization	130,904	-	-	-
Rachel Jones Cemetery	-	-	827	-
General government	-	-	-	-
Committed for:				
Planning	-	27,121	-	-
Flood Control	-	-	-	40,825
Land Act	-	-	-	-
Water	-	-	-	-
Total fund balance	130,904	27,121	827	40,825
Total liabilities and fund balance	$ 130,904	$ 35,426	$ 827	$ 40,825

Special Projects	Lincoln County Land Act Emergency Disaster	Lincoln County Water Emergency Disaster	Totals 2018	Totals 2017
$ 193,424	$ 64,608	$ 63,331	$ 529,054	$ 802,956
341	115	111	858	1,780
27,652	-	-	27,652	-
$ 221,417	$ 64,723	$ 63,442	$ 557,564	$ 804,736
$ 12,850	$ -	$ -	$ 19,087	$ 6,520
-	-	-	2,068	2,002
12,850	-	-	21,155	8,522
-	-	-	130,904	130,856
-	-	-	827	827
208,567	-	-	208,567	472,187
-	-	-	27,121	22,448
-	-	-	40,825	41,730
-	64,723	-	64,723	64,748
-	-	63,442	63,442	63,418
208,567	64,723	63,442	536,409	796,214
$ 221,417	$ 64,723	$ 63,442	$ 557,564	$ 804,736

LINCOLN COUNTY, NEVADA
INTERNALLY REPORTED (BUDGETARY BASIS) FUNDS REPORTED AS PART OF THE GENERAL FUND FOR EXTERNAL REPORTING PURPOSES
COMBINING SCHEDULE OF REVENUES, EXPENDITURES, AND CHANGES IN FUND BALANCES
Year Ended June 30, 2018
(With Comparative Actual Amounts for the Year Ended June 30, 2017)

	Stabilization	Planning	Rachel Jones Memorial Cemetery	Flood Control
Revenues:				
Charges for services	$ -	$ 10,901	$ -	$ -
Miscellaneous	48	13	-	-
Total revenues	48	10,914	-	-
Expenditures:				
General government	-	-	-	-
Public works	-	81,241	-	905
Total expenditures	-	81,241	-	905
Excess (deficiency) of revenues over expenditures	48	(70,327)	-	(905)
Other financing sources (uses):				
Operating transfers in	-	75,000	-	-
Operating transfers out	-	-	-	-
Total other financing sources (uses)	-	75,000	-	-
Net change in fund balance	48	4,673	-	(905)
Fund balance:				
Beginning of year	130,856	22,448	827	41,730
End of year	$ 130,904	$ 27,121	$ 827	$ 40,825

Special Projects	Lincoln County Land Act Emergency Disaster	Lincoln County Water Emergency Disaster	Totals 2018	Totals 2017
$ -	$ -	$ -	$ 10,901	$ 10,622
27,723	24	24	27,832	1,557
27,723	24	24	38,733	12,179
42,843	49	-	42,892	44,097
-	-	-	82,146	81,722
42,843	49	-	125,038	125,819
(15,120)	(25)	24	(86,305)	(113,640)
130,000	-	-	205,000	320,000
(378,500)	-	-	(378,500)	(40,000)
(248,500)	-	-	(173,500)	280,000
(263,620)	(25)	24	(259,805)	166,360
472,187	64,748	63,418	796,214	629,854
$ 208,567	$ 64,723	$ 63,442	$ 536,409	$ 796,214

LINCOLN COUNTY, NEVADA
STABILIZATION
INTERNALLY REPORTED (BUDGETARY BASIS) FUND REPORTED
AS PART OF THE GENERAL FUND FOR EXTERNAL REPORTING PURPOSES
COMPARATIVE BALANCE SHEETS
June 30, 2018 and 2017

	2018	2017
ASSETS		
Pooled cash and investments	$ 130,674	$ 130,550
Interest receivable	230	306
Total assets	$ 130,904	$ 130,856
FUND BALANCE		
Restricted for stabilization	$ 130,904	$ 130,856

LINCOLN COUNTY, NEVADA
STABILIZATION
INTERNALLY REPORTED (BUDGETARY BASIS) FUND REPORTED
AS PART OF THE GENERAL FUND FOR EXTERNAL REPORTING PURPOSES
SCHEDULE OF REVENUES, EXPENDITURES AND CHANGES IN FUND BALANCE
BUDGET (GAAP BASIS) AND ACTUAL
Year Ended June 30, 2018
(With Comparative Actual Amounts for Year Ended June 30, 2017)

	2018 Budget	2018 Actual	Variance - Positive (Negative)	2017 Actual
Revenues:				
Miscellaneous:				
Investment income	$ 50	$ 48	$ (2)	$ 241
Expenditures:				
Current:				
General government:				
Service and supplies	130,715	-	130,715	-
Excess (deficiency) of revenues over expenditures	(130,665)	48	130,713	241
Fund balance:				
Beginning of year	130,665	130,856	191	130,615
End of year	$ -	$ 130,904	$ 130,904	$ 130,856

LINCOLN COUNTY, NEVADA
PLANNING
INTERNALLY REPORTED (BUDGETARY BASIS) FUND REPORTED
AS PART OF THE GENERAL FUND FOR EXTERNAL REPORTING PURPOSES
COMPARATIVE BALANCE SHEETS
June 30, 2018 and 2017

	2018	2017
ASSETS		
Pooled cash and investments	$ 35,365	$ 30,900
Interest receivable	61	70
Total assets	$ 35,426	$ 30,970
LIABILITIES		
Accounts payable	$ 6,237	$ 6,520
Accrued payroll and benefits	2,068	2,002
Total liabilities	8,305	8,522
FUND BALANCE		
Committed for planning	27,121	22,448
Total liabilities and fund balance	$ 35,426	$ 30,970

LINCOLN COUNTY, NEVADA
PLANNING
INTERNALLY REPORTED (BUDGETARY BASIS) FUND REPORTED AS PART OF THE GENERAL FUND FOR EXTERNAL REPORTING PURPOSES
SCHEDULE OF REVENUES, EXPENDITURES, AND CHANGES IN FUND BALANCE - BUDGET (GAAP BASIS) AND ACTUAL
Year Ended June 30, 2018
(With Comparative Actual Amounts for Year Ended June 30, 2017)

	2018 Budget	2018 Actual	Variance-Positive (Negative)	2017 Actual
Revenues:				
Charges for services:				
Planning fees	$ 16,000	$ 10,901	$ (5,099)	$ 10,622
Miscellaneous:				
Investment income	-	13	13	(10)
Total revenues	16,000	10,914	(5,086)	10,612
Expenditures:				
Current:				
Public works:				
Salaries and wages	68,747	60,924	7,823	56,377
Employee benefits	21,622	13,469	8,153	13,205
Services and supplies	9,538	6,848	2,690	11,235
Total expenditures	99,907	81,241	18,666	80,817
Excess (deficiency) of revenues over expenditures	(83,907)	(70,327)	13,580	(70,205)
Other financing sources (uses):				
Operating transfer in	75,000	75,000	-	75,000
Net change in fund balance	(8,907)	4,673	13,580	4,795
Fund balance:				
Beginning of year	8,907	22,448	13,541	17,653
End of year	$ -	$ 27,121	$ 27,121	$ 22,448

LINCOLN COUNTY, NEVADA
RACHEL JONES MEMORIAL CEMETERY
INTERNALLY REPORTED (BUDGETARY BASIS) FUND REPORTED
AS PART OF THE GENERAL FUND FOR EXTERNAL REPORTING PURPOSES
COMPARATIVE BALANCE SHEETS
June 30, 2018 and 2017

	2018	2017
ASSETS		
Pooled cash and investments	$ 827	$ 827
FUND BALANCE		
Restricted for Rachel Jones Cemetery	$ 827	$ 827

LINCOLN COUNTY, NEVADA
RACHEL JONES MEMORIAL CEMETERY
INTERNALLY REPORTED (BUDGETARY BASIS) FUND REPORTED
AS PART OF THE GENERAL FUND FOR EXTERNAL REPORTING PURPOSES
SCHEDULE OF REVENUES, EXPENDITURES, AND CHANGES
IN FUND BALANCE - BUDGET (GAAP BASIS) AND ACTUAL
Year Ended June 30, 2018
(With Comparative Actual Amounts for Year Ended June 30, 2017)

	2018			2017
	Budget	Actual	Variance - Positive (Negative)	Actual
Revenues:				
Miscellaneous:	$ -	$ -	$ -	$ -
Expenditures:				
Health:				
Services and supplies	827	-	827	-
Excess (deficiency) of revenues over expenditures	(827)	-	827	-
Fund balance:				
Beginning of year	827	827	-	827
End of year	$ -	$ 827	$ 827	$ 827

LINCOLN COUNTY, NEVADA
FLOOD CONTROL
INTERNALLY REPORTED (BUDGETARY BASIS) FUND REPORTED
AS PART OF THE GENERAL FUND FOR EXTERNAL REPORTING PURPOSES
COMPARATIVE BALANCE SHEETS
June 30, 2018 and 2017

	2018	2017
ASSETS		
Pooled cash and investments	$ 40,825	$ 41,730
LIABILITIES		
Accounts payable	$ -	$ -
FUND BALANCE		
Committed for flood control	40,825	41,730
Total liabilities and fund balance	$ 40,825	$ 41,730

LINCOLN COUNTY, NEVADA
FLOOD CONTROL
INTERNALLY REPORTED (BUDGETARY BASIS) FUND REPORTED
AS PART OF THE GENERAL FUND FOR EXTERNAL REPORTING PURPOSES
SCHEDULE OF REVENUES, EXPENDITURES, AND CHANGES
IN FUND BALANCE - BUDGET (GAAP BASIS) AND ACTUAL
Year Ended June 30, 2018
(With Comparative Actual Amounts for Year Ended June 30, 2017)

	2018		Variance-Positive (Negative)	2017
	Budget	Actual		Actual
Revenues:	$ -	$ -	$ -	$ -
Expenditures:				
Current:				
Public works:				
Services and supplies	20,000	905	19,095	905
Excess (deficiency) of revenues over expenditures	(20,000)	(905)	19,095	(905)
Other financing sources (uses):				
Operating transfers in	-	-	-	30,000
Net change in fund balance	(20,000)	(905)	19,095	29,095
Fund balance:				
Beginning of year	20,000	41,730	21,730	12,635
End of year	$ -	$ 40,825	$ 40,825	$ 41,730

LINCOLN COUNTY, NEVADA
SPECIAL PROJECTS
INTERNALLY REPORTED (BUDGETARY BASIS) FUND REPORTED
AS PART OF THE GENERAL FUND FOR EXTERNAL REPORTING PURPOSES
COMPARATIVE BALANCE SHEETS
June 30, 2018 and 2017

	2018	2017
ASSETS		
Pooled cash and investments	$ 193,424	$ 471,082
Interest receivable	341	1,105
Due from others	27,652	-
Total assets	$ 221,417	$ 472,187
LIABILITIES		
Accounts payable	$ 12,850	$ -
FUND BALANCE		
Restricted	208,567	472,187
Total liabilities and fund balance	$ 221,417	$ 472,187

LINCOLN COUNTY, NEVADA
SPECIAL PROJECTS
INTERNALLY REPORTED (BUDGETARY BASIS) FUND REPORTED
AS PART OF THE GENERAL FUND FOR EXTERNAL REPORTING PURPOSES
SCHEDULE OF REVENUES, EXPENDITURES, AND CHANGES
IN FUND BALANCE - BUDGET (GAAP BASIS) AND ACTUAL
Year Ended June 30, 2018
(With Comparative Actual Amounts for Year Ended June 30, 2017)

	2018 Budget	2018 Actual	Variance - Positive (Negative)	2017 Actual
Revenues:				
Miscellaneous:				
Investment Income	$ -	$ 71	$ 71	$ 1,091
Other	-	27,652	27,652	-
	-	27,723	27,723	1,091
Expenditures:				
General government:				
Salaries and wages	-	787	(787)	-
Benefits	-	300	(300)	-
Services and supplies	10,000	28,906	(18,906)	4,480
Capital outlay	94,423	12,850	81,573	39,617
Total expenditures	104,423	42,843	61,580	44,097
Excess (deficiency) of revenues over expenditures	(104,423)	(15,120)	89,303	(43,006)
Other financing sources (uses):				
Operating transfers in	130,000	130,000	-	215,000
Operating transfers out	(378,577)	(378,500)	77	(40,000)
Total other financing sources (uses)	(248,577)	(248,500)	77	175,000
Net change in fund balance	(353,000)	(263,620)	89,380	131,994
Fund balance:				
Beginning of year	353,000	472,187	119,187	340,193
End of year	$ -	$ 208,567	$ 208,567	$ 472,187

LINCOLN COUNTY, NEVADA
LINCOLN COUNTY LAND ACT EMERGENCY DISASTER
INTERNALLY REPORTED (BUDGETARY BASIS) FUND REPORTED
AS PART OF THE GENERAL FUND FOR EXTERNAL REPORTING PURPOSES
COMPARATIVE BALANCE SHEETS
June 30, 2018 and 2017

	2018	2017
ASSETS		
Pooled cash and investments	$ 64,608	$ 64,597
Interest receivable	115	151
Total assets	$ 64,723	$ 64,748
LIABILITIES		
Accounts payable	$ -	$ -
FUND BALANCE		
Committed	64,723	64,748
Total liabilities and fund balance	$ 64,723	$ 64,748

LINCOLN COUNTY, NEVADA
LINCOLN COUNTY LAND ACT EMERGENCY DISASTER
INTERNALLY REPORTED (BUDGETARY BASIS) FUND REPORTED
AS PART OF THE GENERAL FUND FOR EXTERNAL REPORTING PURPOSES
SCHEDULE OF REVENUES, EXPENDITURES, AND CHANGES
IN FUND BALANCE - BUDGET (GAAP BASIS) AND ACTUAL
Year Ended June 30, 2018
(With Comparative Actual Amounts for Year Ended June 30, 2017)

	2018		Variance - Positive (Negative)	2017
	Budget	Actual		Actual
Revenues:				
Miscellaneous:				
Investment income	$ -	$ 24	$ 24	$ 119
Expenditures:				
Current:				
General government:				
Services and supplies	64,629	49	64,580	-
Excess (deficiency) of revenues over expenditures	(64,629)	(25)	64,604	119
Fund balance:				
Beginning of year	64,629	64,748	119	64,629
End of year	$ -	$ 64,723	$ 64,723	$ 64,748

LINCOLN COUNTY, NEVADA
LINCOLN COUNTY WATER EMERGENCY DISASTER
INTERNALLY REPORTED (BUDGETARY BASIS) FUND REPORTED
AS PART OF THE GENERAL FUND FOR EXTERNAL REPORTING PURPOSES
COMPARATIVE BALANCE SHEETS
June 30, 2018 and 2017

	2018	2017
ASSETS		
Pooled cash and investments	$ 63,331	$ 63,270
Interest receivable	111	148
Total assets	$ 63,442	$ 63,418
FUND BALANCE		
Committed	$ 63,442	$ 63,418

LINCOLN COUNTY, NEVADA
LINCOLN COUNTY WATER EMERGENCY DISASTER
INTERNALLY REPORTED (BUDGETARY BASIS) FUND REPORTED
AS PART OF THE GENERAL FUND FOR EXTERNAL REPORTING PURPOSES
SCHEDULE OF REVENUES, EXPENDITURES, AND CHANGES
IN FUND BALANCE - BUDGET (GAAP BASIS) AND ACTUAL
Year Ended June 30, 2018
(With Comparative Actual Amounts for Year Ended June 30, 2017)

	2018 Budget	2018 Actual	Variance - Positive (Negative)	2017 Actual
Revenues:				
Miscellaneous:				
Investment income	$ 20	$ 24	$ 4	$ 116
Expenditures:				
Current:				
General government:				
Services and supplies	63,342	-	63,342	-
Excess (deficiency) of revenues over expenditures	(63,322)	24	63,346	116
Fund balance:				
Beginning of year	63,322	63,418	96	63,302
End of year	$ -	$ 63,442	$ 63,442	$ 63,418

LINCOLN COUNTY, NEVADA
NONMAJOR CAPITAL PROJECTS FUNDS
COMBINING BALANCE SHEET
June 30, 2018
(With Comparative Totals for June 30, 2017)

	Capital Improvements	Pioche Town Grant	Pioche Town	Alamo Town	Panaca Town
ASSETS					
Pooled cash and investments	$ 35,984	$ 13,983	$ 49,263	$ 15,825	$ 11,416
Interest receivable	170	24	195	70	56
Taxes receivable	1,668	-	-	-	-
Due from other governments	92	-	-	-	-
Total assets	$ 37,914	$ 14,007	$ 49,458	$ 15,895	$ 11,472
LIABILITIES					
Accounts payable	$ -	$ -	$ -	$ -	$ -
DEFERRED INFLOWS OF RESOURCES					
Unavailable revenue - property taxes	1,370	-	-	-	-
FUND BALANCE					
Restricted for:					
Capital projects	36,544	14,007	49,458	15,895	11,472
Total liabilities, deferred inflows of resources, and fund balance	$ 37,914	$ 14,007	$ 49,458	$ 15,895	$ 11,472

Ambulance	Fair Board	Vehicle	Road Equipment	Airport	Lincoln County Land Act
$ 11,878	$ 29,285	$ 13,380	$ 82,326	$ 2,953	$ 29,774
54	130	49	144	15	52
-	-	-	-	-	-
-	-	-	-	-	-
$ 11,932	$ 29,415	$ 13,429	$ 82,470	$ 2,968	$ 29,826
$ -	$ -	$ -	$ -	$ -	$ -
-	-	-	-	-	-
11,932	29,415	13,429	82,470	2,968	29,826
$ 11,932	$ 29,415	$ 13,429	$ 82,470	$ 2,968	$ 29,826

LINCOLN COUNTY, NEVADA
NONMAJOR CAPITAL PROJECTS FUNDS
COMBINING BALANCE SHEET
June 30, 2018
(With Comparative Totals for June 30, 2017)

	Lincoln County Water	Lincoln County Water District	Totals 2018	Totals 2017
ASSETS				
Pooled cash and investments	$ 78,671	$ 695,339	$ 1,070,077	$ 1,122,430
Interest receivable	139	2,403	3,501	3,299
Taxes receivable	-	-	1,668	1,401
Due from other governments	-	-	92	113
Total assets	$ 78,810	$ 697,742	$ 1,075,338	$ 1,127,243
LIABILITIES				
Accounts payable	$ -	$ -	$ -	$ -
DEFERRED INFLOWS OF RESOURCES				
Unavailable revenue - property taxes	-	-	1,370	1,198
FUND BALANCE				
Restricted for:				
Capital projects	78,810	697,742	1,073,968	1,126,045
Total liabilities, deferred inflows of resources, and fund balance	$ 78,810	$ 697,742	$ 1,075,338	$ 1,127,243

LINCOLN COUNTY, NEVADA
NONMAJOR CAPITAL PROJECTS FUNDS
COMBINING SCHEDULE OF REVENUES, EXPENDITURES,
AND CHANGES IN FUND BALANCE
Year Ended June 30, 2018
(With Comparative Actual Amounts for Year Ended June 30, 2017)

	Capital Improvements	Pioche Town Grant	Pioche Town	Alamo Town	Panaca Town
Revenues:					
Taxes	$ 108,877	$ -	$ -	$ -	$ -
Intergovernmental	311	-	-	-	-
Miscellaneous	35	5	40	14	238
Total revenues	109,223	5	40	14	238
Expenditures:					
Intergovernmental	7,637	-	-	-	-
Capital projects	-	-	-	-	4,227
Debt service:					
Principal	-	-	-	-	-
Interest	-	-	-	-	-
Total expenditures	7,637	-	-	-	4,227
Excess (deficiency) of revenues over expenditures	101,586	5	40	14	(3,989)
Other financing sources (uses):					
Operating transfers in	-	-	3,273	2,181	4,363
Operating transfers out	(107,817)	-	-	-	-
Sale of capital assets	-	-	-	-	-
Capital lease proceeds	-	-	-	-	-
Total other financing sources (uses)	(107,817)	-	3,273	2,181	4,363
Net change in fund balance	(6,231)	5	3,313	2,195	374
Fund balance:					
Beginning of year	42,775	14,002	46,145	13,700	11,098
End of year	$ 36,544	$ 14,007	$ 49,458	$ 15,895	$ 11,472

Ambulance	Fair Board	Vehicle	Road Equipment	Airport	Lincoln County Land Act
$ -	$ -	$ -	$ -	$ -	$ -
-	-	-	-	-	-
11	27	10	30	3	11
11	27	10	30	3	11
-	-	-	-	-	-
-	4,000	42,007	190,645	-	-
-	-	68,240	-	-	-
-	-	5,472	-	-	-
-	4,000	115,719	190,645	-	-
11	(3,973)	(115,709)	(190,615)	3	11
-	-	114,000	100,000	-	-
-	-	-	-	-	-
-	-	14,798	38,946	-	-
-	-	-	-	-	-
-	-	128,798	138,946	-	-
11	(3,973)	13,089	(51,669)	3	11
11,921	33,388	340	134,139	2,965	29,815
$ 11,932	$ 29,415	$ 13,429	$ 82,470	$ 2,968	$ 29,826

LINCOLN COUNTY, NEVADA
NONMAJOR CAPITAL PROJECTS FUNDS
COMBINING SCHEDULE OF REVENUES, EXPENDITURES,
AND CHANGES IN FUND BALANCE
Year Ended June 30, 2018
(With Comparative Actual Amounts for Year Ended June 30, 2017)

	Lincoln County Water	Lincoln County Water District	Totals 2018	Totals 2017
Revenues:				
Taxes	$ -	$ -	$ 108,877	$ 111,797
Intergovernmental	-	-	311	134
Miscellaneous	28	(1,883)	(1,431)	17,048
Total revenues	28	(1,883)	107,757	128,979
Expenditures:				
Intergovernmental	-	-	7,637	7,852
Capital projects	-	7,350	248,229	274,181
Debt service:				
Principal	-	-	68,240	69,882
Interest	-	-	5,472	3,830
Total expenditures	-	7,350	329,578	355,745
Excess (deficiency) of revenues over expenditures	28	(9,233)	(221,821)	(226,766)
Other financing sources (uses):				
Operating transfers in	-	-	223,817	208,178
Operating transfers out	-	-	(107,817)	(92,095)
Sale of capital assets	-	-	53,744	-
Capital lease proceeds	-	-	-	90,000
Total other financing sources (uses)	-	-	169,744	206,083
Net change in fund balance	28	(9,233)	(52,077)	(20,683)
Fund balance:				
Beginning of year	78,782	706,975	1,126,045	1,146,728
End of year	$ 78,810	$ 697,742	$ 1,073,968	$ 1,126,045

LINCOLN COUNTY, NEVADA
NONMAJOR CAPITAL IMPROVEMENTS CAPITAL PROJECTS FUND
COMPARATIVE BALANCE SHEETS
June 30, 2018 and 2017

	2018	2017
ASSETS		
Pooled cash and investments	$ 35,984	$ 42,361
Interest receivable	170	98
Taxes receivable	1,668	1,401
Due from other governments	92	113
Total assets	$ 37,914	$ 43,973
LIABILITIES		
Accounts payable	$ -	$ -
DEFERRED INFLOWS OF RESOURCES		
Unavailable revenue - property taxes	1,370	1,198
FUND BALANCE		
Restricted	36,544	42,775
Total liabilities, deferred inflows of resources, and fund balance	$ 37,914	$ 43,973

LINCOLN COUNTY, NEVADA
NONMAJOR CAPITAL IMPROVEMENTS CAPITAL PROJECTS FUND
SCHEDULE OF REVENUES, EXPENDITURES, AND CHANGES
IN FUND BALANCE - BUDGET (GAAP BASIS) AND ACTUAL
Year Ended June 30, 2018
(With Comparative Actual Amounts for Year Ended June 30, 2017)

	2018 Budget	2018 Actual	Variance - Positive (Negative)	2017 Actual
Revenues:				
Taxes:				
Property taxes	$ 111,919	$ 108,877	$ (3,042)	$ 111,797
Intergovernmental:				
Private car lines	-	202	202	-
Fish and wildlife	-	109	109	134
Total intergovernmental	-	311	311	134
Miscellaneous:				
Investment income	430	35	(395)	63
Total revenues	112,349	109,223	(3,126)	111,994
Expenditures:				
Current:				
Intergovernmental	7,835	7,637	198	7,852
Capital projects:				
Services and supplies	-	-	-	-
Capital outlay	13,250	-	13,250	2,024
Total capital projects	13,250	-	13,250	2,024
Total expenditures	21,085	7,637	13,448	9,876
Excess (deficiency) of revenues over expenditures	91,264	101,586	10,322	102,118
Other financing sources (uses) :				
Operating transfers out	(108,072)	(107,817)	255	(92,095)
Net change in fund balance	(16,808)	(6,231)	10,577	10,023
Fund balance:				
Beginning of year	17,550	42,775	25,225	32,752
End of year	$ 742	$ 36,544	$ 35,802	$ 42,775

LINCOLN COUNTY, NEVADA
NONMAJOR PIOCHE TOWN GRANT CAPITAL PROJECTS FUND
COMPARATIVE BALANCE SHEETS
June 30, 2018 and 2017

	2018	2017
ASSETS		
Pooled cash and investments	$ 13,983	$ 13,969
Interest receivable	24	33
Total assets	$ 14,007	$ 14,002
LIABILITIES		
Accounts payable	$ -	$ -
FUND BALANCE		
Restricted	14,007	14,002
Total liabilities and fund balance	$ 14,007	$ 14,002

LINCOLN COUNTY, NEVADA
NONMAJOR PIOCHE TOWN GRANT CAPITAL PROJECTS FUND
SCHEDULE OF REVENUES, EXPENDITURES, AND CHANGES
IN FUND BALANCE - BUDGET (GAAP BASIS) AND ACTUAL
Year Ended June 30, 2018
(With Comparative Actual Amounts for Year Ended June 30, 2017)

	2018		Variance - Positive	2017
	Budget	Actual	(Negative)	Actual
Revenues:				
Miscellaneous:				
Investment income	$ 71	$ 5	$ (66)	$ 26
Expenditures:				
Current:				
Capital projects:				
Capital outlay	13,920	-	13,920	-
Excess (deficiency) of revenues over expenditures	(13,849)	5	13,854	26
Fund balance:				
Beginning of year	14,047	14,002	(45)	13,976
End of year	$ 198	$ 14,007	$ 13,809	$ 14,002

LINCOLN COUNTY, NEVADA
NONMAJOR PIOCHE TOWN CAPITAL PROJECTS FUND
COMPARATIVE BALANCE SHEETS
June 30, 2018 and 2017

	2018	2017
ASSETS		
Pooled cash and investments	$ 49,263	$ 46,044
Interest receivable	195	101
Total assets	$ 49,458	$ 46,145
LIABILITIES		
Accounts payable	$ -	$ -
FUND BALANCE		
Restricted	49,458	46,145
Total liabilities and fund balance	$ 49,458	$ 46,145

LINCOLN COUNTY, NEVADA
NONMAJOR PIOCHE TOWN CAPITAL PROJECTS FUND
SCHEDULE OF REVENUES, EXPENDITURES, AND CHANGES IN FUND BALANCE - BUDGET (GAAP BASIS) AND ACTUAL
Year Ended June 30, 2018
(With Comparative Actual Amounts for Year Ended June 30, 2017)

	2018		Variance - Positive	2017
	Budget	Actual	(Negative)	Actual
Revenues:				
Miscellaneous:				
Investment income	$ 50	$ 40	$ (10)	$ 84
Expenditures:				
Current:				
Capital projects:				
Capital outlay	43,625	-	43,625	1,920
Excess (deficiency) of revenues over expenditures	(43,575)	40	43,615	(1,836)
Other financing sources (uses):				
Operating transfers in	5,433	3,273	(2,160)	6,448
Net change in fund balance	(38,142)	3,313	41,455	4,612
Fund balance:				
Beginning of year	38,142	46,145	8,003	41,533
End of year	$ -	$ 49,458	$ 49,458	$ 46,145

LINCOLN COUNTY, NEVADA
NONMAJOR ALAMO TOWN CAPITAL PROJECTS FUND
COMPARATIVE BALANCE SHEETS
June 30, 2018 and 2017

	2018	2017
ASSETS		
Pooled cash and investments	$ 15,825	$ 13,668
Interest receivable	70	32
Total assets	$ 15,895	$ 13,700
LIABILITIES		
Accounts payable	$ -	$ -
FUND BALANCE		
Restricted	15,895	13,700
Total liabilities and fund balance	$ 15,895	$ 13,700

LINCOLN COUNTY, NEVADA
NONMAJOR ALAMO TOWN CAPITAL PROJECTS FUND
SCHEDULE OF REVENUES, EXPENDITURES, AND CHANGES IN FUND BALANCE - BUDGET (GAAP BASIS) AND ACTUAL
Year Ended June 30, 2018
(With Comparative Actual Amounts for Year Ended June 30, 2017)

	2018 Budget	2018 Actual	Variance - Positive (Negative)	2017 Actual
Revenues:				
Miscellaneous:				
Investment income	$ 100	$ 14	$ (86)	$ 26
Expenditures:				
Current:				
Capital projects:				
Capital outlay	6,157	-	6,157	-
Excess (deficiency) of revenues over expenditures	(6,057)	14	6,071	26
Other financing sources (uses):				
Operating transfers in	2,237	2,181	(56)	2,243
Net change in fund balance	(3,820)	2,195	6,015	2,269
Fund balance:				
Beginning of year	3,820	13,700	9,880	11,431
End of year	$ -	$ 15,895	$ 15,895	$ 13,700

LINCOLN COUNTY, NEVADA
NONMAJOR PANACA TOWN CAPITAL PROJECTS FUND
COMPARATIVE BALANCE SHEETS
June 30, 2018 and 2017

	2018	2017
ASSETS		
Pooled cash and investments	$ 11,416	$ 11,072
Interest receivable	56	26
Total assets	$ 11,472	$ 11,098
LIABILITIES		
Accounts payable	$ -	$ -
FUND BALANCE		
Restricted	11,472	11,098
Total liabilities and fund balance	$ 11,472	$ 11,098

LINCOLN COUNTY, NEVADA
NONMAJOR PANACA TOWN CAPITAL PROJECTS FUND
SCHEDULE OF REVENUES, EXPENDITURES, AND CHANGES IN FUND BALANCE - BUDGET (GAAP BASIS) AND ACTUAL
Year Ended June 30, 2018
(With Comparative Actual Amounts for Year Ended June 30, 2017)

	2018 Budget	2018 Actual	Variance - Positive (Negative)	2017 Actual
Revenues:				
Miscellaneous:				
Investment income	$ 10	$ 12	$ 2	$ 24
Other	-	226	226	-
Total revenues	10	238	228	24
Expenditures:				
Current:				
Capital projects:				
Capital outlay	9,000	4,227	4,773	1,499
Excess (deficiency) of revenues over expenditures	(8,990)	(3,989)	5,001	(1,475)
Other financing sources (uses):				
Operating transfers in	4,477	4,363	(114)	4,487
Net change in fund balance	(4,513)	374	4,887	3,012
Fund balance:				
Beginning of year	6,675	11,098	4,423	8,086
End of year	$ 2,162	$ 11,472	$ 9,310	$ 11,098

LINCOLN COUNTY, NEVADA
NONMAJOR AMBULANCE CAPITAL PROJECTS FUND
COMPARATIVE BALANCE SHEETS
June 30, 2018 and 2017

	2018	2017
ASSETS		
Pooled cash and investments	$ 11,878	$ 11,893
Interest receivable	54	28
Total assets	$ 11,932	$ 11,921
LIABILITIES		
Accounts payable	$ -	$ -
FUND BALANCE		
Restricted	11,932	11,921
Total liabilities and fund balance	$ 11,932	$ 11,921

LINCOLN COUNTY, NEVADA
NONMAJOR AMBULANCE CAPITAL PROJECTS FUND
SCHEDULE OF REVENUES, EXPENDITURES, AND CHANGES IN FUND BALANCE - BUDGET (GAAP BASIS) AND ACTUAL
Year Ended June 30, 2018
(With Comparative Actual Amounts for Year Ended June 30, 2017)

	2018		Variance-Positive	2017
	Budget	Actual	(Negative)	Actual
Miscellaneous:				
Investment income	$ 200	$ 11	$ (189)	$ (66)
Other	-	-	-	23,330
Total revenues	200	11	(189)	23,264
Expenditures:				
Current:				
Capital projects:				
Capital outlay	10,000	-	10,000	23,300
Excess (deficiency) of revenues over expenditures	(9,800)	11	9,811	(36)
Other financing sources (uses):				
Operating transfers in	-	-	-	-
Net change in fund balance	(9,800)	11	9,811	(36)
Fund balance:				
Beginning of year	35,487	11,921	(23,566)	11,957
End of year	$ 25,687	$ 11,932	$ (13,755)	$ 11,921

LINCOLN COUNTY, NEVADA
NONMAJOR FAIR BOARD CAPITAL PROJECTS FUND
COMPARATIVE BALANCE SHEETS
June 30, 2018 and 2017

	2018	2017
ASSETS		
Pooled cash and investments	$ 29,285	$ 33,310
Interest receivable	130	78
Total assets	$ 29,415	$ 33,388
LIABILITIES		
Accounts payable	$ -	$ -
FUND BALANCE		
Restricted	29,415	33,388
Total liabilities and fund balance	$ 29,415	$ 33,388

LINCOLN COUNTY, NEVADA
NONMAJOR FAIR BOARD CAPITAL PROJECTS FUND
SCHEDULE OF REVENUES, EXPENDITURES, AND CHANGES IN FUND BALANCE - BUDGET (GAAP BASIS) AND ACTUAL
Year Ended June 30, 2018
(With Comparative Actual Amounts for Year Ended June 30, 2017)

	2018 Budget	2018 Actual	Variance - Positive (Negative)	2017 Actual
Revenues:				
Miscellaneous:				
Investment income	$ 200	$ 27	$ (173)	$ 48
Expenditures:				
Current:				
Capital projects:				
Capital outlay	27,802	4,000	23,802	-
Excess (deficiency) of revenues over expenditures	(27,602)	(3,973)	23,629	48
Fund balance:				
Beginning of year	27,602	33,388	5,786	33,340
End of year	$ -	$ 29,415	$ 29,415	$ 33,388

LINCOLN COUNTY, NEVADA
NONMAJOR VEHICLE CAPITAL PROJECTS FUND
COMPARATIVE BALANCE SHEETS
June 30, 2018 and 2017

	2018	2017
ASSETS		
Pooled cash and investments	$ 13,380	$ 339
Interest receivable	49	1
Total assets	$ 13,429	$ 340
LIABILITIES		
Accounts payable	$ -	$ -
FUND BALANCE		
Restricted	13,429	340
Total liabilities and fund balance	$ 13,429	$ 340

LINCOLN COUNTY, NEVADA
NONMAJOR VEHICLE CAPITAL PROJECTS FUND
SCHEDULE OF REVENUES, EXPENDITURES, AND CHANGES IN FUND BALANCE - BUDGET (GAAP BASIS) AND ACTUAL
Year Ended June 30, 2018
(With Comparative Actual Amounts for Year Ended June 30, 2017)

	2018		Variance - Positive	2017
	Budget	Actual	(Negative)	Actual
Revenues:				
Miscellaneous:				
Investment income	$ -	$ 10	$ 10	$ 9
Expenditures:				
Current:				
Capital projects:				
Capital outlay	61,000	42,007	18,993	127,038
Debt service:				
Principal	68,240	68,240	-	69,882
Interest	5,436	5,472	(36)	3,830
Total debt service	73,676	73,712	(36)	73,712
Total expenditures	134,676	115,719	18,957	200,750
Excess (deficiency) of revenues over expenditures	(134,676)	(115,709)	18,967	(200,741)
Other financing sources (uses):				
Operating transfers in	114,000	114,000	-	95,000
Sale of capital assets	15,000	14,798	(202)	-
Capital lease proceeds	-	-	-	90,000
Total other financing sources (uses)	129,000	128,798	(202)	185,000
Net change in fund balance	(5,676)	13,089	18,765	(15,741)
Fund balance:				
Beginning of year	5,676	340	(5,336)	16,081
End of year	$ -	$ 13,429	$ 13,429	$ 340

LINCOLN COUNTY, NEVADA
NONMAJOR ROAD EQUIPMENT CAPITAL PROJECTS FUND
COMPARATIVE BALANCE SHEETS
June 30, 2018 and 2017

	2018	2017
ASSETS		
Pooled cash and investments	$ 82,326	$ 133,825
Interest receivable	144	314
Total assets	$ 82,470	$ 134,139
FUND BALANCE		
Restricted	$ 82,470	$ 134,139

LINCOLN COUNTY, NEVADA
NONMAJOR ROAD EQUIPMENT CAPITAL PROJECTS FUND
SCHEDULE OF REVENUES, EXPENDITURES, AND CHANGES IN FUND BALANCE - BUDGET (GAAP BASIS) AND ACTUAL
Year Ended June 30, 2018
(With Comparative Actual Amounts for Year Ended June 30, 2017)

	2018		Variance - Positive	2017
	Budget	Actual	(Negative)	Actual
Revenues:				
Miscellaneous:				
Investment income	$ -	$ 30	$ 30	$ 463
Expenditures:				
Current:				
Capital projects:				
Capital outlay	220,000	190,645	29,355	100,000
Excess (deficiency) of revenues over expenditures	(220,000)	(190,615)	29,385	(99,537)
Other financing sources (uses):				
Operating transfers in	100,000	100,000	-	100,000
Sale of capital assets	-	38,946	38,946	-
Total other financing sources	100,000	138,946	38,946	100,000
Net change in fund balance	(120,000)	(51,669)	68,331	463
Fund balance:				
Beginning of year	133,676	134,139	463	133,676
End of year	$ 13,676	$ 82,470	$ 68,794	$ 134,139

LINCOLN COUNTY, NEVADA
NONMAJOR AIRPORT CAPITAL PROJECTS FUND
COMPARATIVE BALANCE SHEETS
June 30, 2018 and 2017

	2018	2017
ASSETS		
Pooled cash and investments	$ 2,953	$ 2,958
Interest receivable	15	7
Total assets	$ 2,968	$ 2,965
LIABILITIES		
Accounts payable	$ -	$ -
FUND BALANCE		
Restricted	2,968	2,965
Total liabilities and fund balance	$ 2,968	$ 2,965

LINCOLN COUNTY, NEVADA
NONMAJOR AIRPORT CAPITAL PROJECTS FUND
SCHEDULE OF REVENUES, EXPENDITURES, AND CHANGES IN FUND BALANCE - BUDGET (GAAP BASIS) AND ACTUAL
Year Ended June 30, 2018
(With Comparative Actual Amounts for the Year Ended June 30, 2017)

	2018		Variance - Positive	2017
	Budget	Actual	(Negative)	Actual
Revenues				
Miscellaneous:				
Investment income	$ -	$ 3	$ 3	$ 5
Expenditures:				
Curent:				
Capital projects:				
Capital outlay	2,000	-	2,000	-
Excess (deficiency) of revenues over expenditures	(2,000)	3	2,003	5
Fund balance:				
Beginning of year	2,000	2,965	965	2,960
End of year	$ -	$ 2,968	$ 2,968	$ 2,965

LINCOLN COUNTY, NEVADA
NONMAJOR LINCOLN COUNTY LAND ACT CAPITAL PROJECTS FUND
COMPARATIVE BALANCE SHEETS
June 30, 2018 and 2017

	2018	2017
ASSETS		
Pooled cash and investments	$ 29,774	$ 29,745
Interest receivable	52	70
Total assets	$ 29,826	$ 29,815
LIABILITIES		
Accounts payable	$ -	$ -
FUND BALANCE		
Restricted	29,826	29,815
Total liabilities and fund balance	$ 29,826	$ 29,815

LINCOLN COUNTY, NEVADA
NONMAJOR LINCOLN COUNTY LAND ACT CAPITAL PROJECTS FUND
SCHEDULE OF REVENUES, EXPENDITURES, AND CHANGES
IN FUND BALANCE - BUDGET (GAAP BASIS) AND ACTUAL
Year Ended June 30, 2018
(With Comparative Actual Amounts for the Year Ended June 30, 2017)

	2018			2017
	Budget	Actual	Variance - Positive (Negative)	Actual
Revenues:				
Miscellaneous:				
Investment income	$ -	$ 11	$ 11	$ 55
Expenditures:				
Current:				
Capital projects:				
Capital outlay	29,760	-	29,760	-
Excess (deficiency) of revenues over expenditures	(29,760)	11	29,771	55
Fund balance:				
Beginning of year	29,760	29,815	55	29,760
End of year	$ -	$ 29,826	$ 29,826	$ 29,815

LINCOLN COUNTY, NEVADA
NONMAJOR LINCOLN COUNTY WATER CAPITAL PROJECTS FUND
COMPARATIVE BALANCE SHEETS
June 30, 2018 and 2017

	2018	2017
ASSETS		
Pooled cash and investments	$ 78,671	$ 78,597
Interest receivable	139	185
Total assets	$ 78,810	$ 78,782
LIABILITIES		
Accounts payable	$ -	$ -
FUND BALANCE		
Restricted	78,810	78,782
Total liabilities and fund balance	$ 78,810	$ 78,782

LINCOLN COUNTY, NEVADA
NONMAJOR LINCOLN COUNTY WATER CAPITAL PROJECTS FUND
SCHEDULE OF REVENUES, EXPENDITURES, AND CHANGES
IN FUND BALANCE - BUDGET (GAAP BASIS) AND ACTUAL
Year Ended June 30, 2018
(With Comparative Actual Amounts for the Year Ended June 30, 2017)

	2018			
	Budget	Actual	Variance - Positive (Negative)	2017 Actual
Revenues:				
Miscellaneous:				
Investment income	$ -	$ 28	$ 28	$ 145
Expenditures:				
Current:				
Capital projects:				
Capital outlay	78,637	-	78,637	-
Excess (deficiency) of revenues over expenditures	(78,637)	28	78,665	145
Fund balance:				
Beginning of year	78,637	78,782	145	78,637
End of year	$ -	$ 78,810	$ 78,810	$ 78,782

LINCOLN COUNTY, NEVADA
NONMAJOR LINCOLN COUNTY WATER DISTRICT CAPITAL PROJECTS FUND
COMPARATIVE BALANCE SHEETS
June 30, 2018 and 2017

	2018	2017
ASSETS		
Pooled cash and investments	$ 695,339	$ 704,649
Interest receivable	2,403	2,326
Total assets	$ 697,742	$ 706,975
LIABILITIES		
Accounts payable	$ -	$ -
FUND BALANCE		
Restricted	697,742	706,975
Total liabilities and fund balance	$ 697,742	$ 706,975

LINCOLN COUNTY, NEVADA
NONMAJOR LINCOLN COUNTY WATER DISTRICT CAPITAL PROJECTS FUND
SCHEDULE OF REVENUES, EXPENDITURES, AND CHANGES
IN FUND BALANCE - BUDGET (GAAP BASIS) AND ACTUAL
Year Ended June 30, 2018
(With Comparative Actual Amounts for the Year Ended June 30, 2017)

	2018		Variance - Positive	2017
	Budget	Actual	(Negative)	Actual
Revenues:				
Miscellaneous:				
Investment income	$ 7,500	$ (1,883)	$ (9,383)	$ (7,164)
Expenditures:				
Current:				
Capital projects:				
Capital outlay	747,539	7,350	740,189	18,400
Excess (deficiency) of revenues over expenditures	(740,039)	(9,233)	730,806	(25,564)
Fund balance:				
Beginning of year	740,039	706,975	(33,064)	732,539
End of year	$ -	$ 697,742	$ 697,742	$ 706,975

LINCOLN COUNTY, NEVADA
NONMAJOR ENTERPRISE FUNDS
COMBINING STATEMENT OF NET POSITION
June 30, 2018
With Comparative Total for June 30, 2017

	Pioche Public Water Utility	Pioche Public Sewer Utility	Building Department
ASSETS			
Current assets:			
Pooled cash and investments	$ 122,677	$ 179,327	$ 33,092
Accounts receivable	24,215	10,768	-
Interest receivable	128	139	29
Total current assets	147,020	190,234	33,121
Restricted assets:			
Cash	20,748	11,490	-
Capital assets:			
Land	2,000	10,000	-
Property, plant and equipment (net of depreciation)	476,679	570,888	951
Total capital assets	478,679	580,888	951
Total assets	646,447	782,612	34,072
DEFERRED OUTFLOWS OF RESOURCES			
Deferred pension charge	12,927	7,210	17,928
Deferred opeb	1,762	1,762	-
Total deferred outflows of resources	14,689	8,972	17,928
LIABILITIES			
Current liabilities:			
Accounts payable	20,770	1,364	599
Accrued payroll and benefits	5,099	2,782	6,071
Customer deposits	1,760	-	-
Accrued compensated absences	4,640	2,203	6,183
Accrued interest payable	-	1,336	-
Total current liabilities	32,269	7,685	12,853
Current liabilities payable from restricted assets:			
Revenue bond	19,537	3,154	-
Non-current liabilities:			
Accrued compensated absences	3,297	1,864	3,790
Net pension liability	88,999	45,565	100,186
OPEB liability	30,930	30,929	-
Revenue bond	7,638	180,783	-
Total non-current liabilities	130,864	259,141	103,976
Total liabilities	182,670	269,980	116,829
DEFERRED INFLOWS OF RESOURCES			
Deferred pension charge	9,634	5,077	12,464
NET POSITION			
Invested in capital assets, net of related debt	451,504	396,951	951
Restricted for revenue bond debt service	20,748	11,490	-
Unrestricted	(3,420)	108,086	(78,244)
Total net position	$ 468,832	$ 516,527	$ (77,293)

Totals	
2018	2017
$ 335,096	$ 313,928
34,983	33,571
296	447
370,375	347,946
32,238	32,238
12,000	12,000
1,048,518	1,100,071
1,060,518	1,112,071
1,463,131	1,492,255
38,065	56,456
3,524	-
41,589	56,456
22,733	14,617
13,952	10,734
1,760	1,250
13,026	12,653
1,336	1,658
52,807	40,912
22,691	21,607
8,951	8,571
234,750	247,820
61,859	-
188,421	211,399
493,981	467,790
569,479	530,309
27,175	19,119
849,406	879,065
32,238	32,238
26,422	87,980
$ 908,066	$ 999,283

LINCOLN COUNTY, NEVADA
NONMAJOR ENTERPRISE FUNDS
COMBINING SCHEDULE OF REVENUES, EXPENSES, AND CHANGES IN NET POSITION
Year Ended June 30, 2018
With Comparative Total for June 30, 2017

	Pioche Public Water Utility	Pioche Public Sewer Utility	Building Department
Operating revenues:			
Charges for services	$ 136,855	$ 113,303	$ 17,849
Operating expenses:			
Salaries and wages	48,616	29,548	41,213
Employee benefits	25,911	15,948	28,941
Services and supplies	104,060	30,524	6,833
Depreciation	27,008	23,664	881
Total operating expenses	205,595	99,684	77,868
Operating income (loss)	(68,740)	13,619	(60,019)
Non-operating revenues (expenses):			
Investment income	27	29	7
Miscellaneous fees	-	-	-
Operating transfers in	-	-	40,000
Capital fees	34,372	22,263	-
Custom fees	4,916	1,223	-
Interest expense	(1,875)	(7,825)	-
Total non-operating revenues (expenses)	37,440	15,690	40,007
Change in net position	(31,300)	29,309	(20,012)
Net Position:			
Beginning of year	532,833	518,017	(51,567)
Restatement per GASB 68	(32,701)	(30,799)	(5,714)
Beginning balance as restated	500,132	487,218	(57,281)
End of year	$ 468,832	$ 516,527	$ (77,293)

Totals	
2018	2017
$ 268,007	$ 287,664
119,377	121,524
70,800	71,299
141,417	118,030
51,553	52,120
383,147	362,973
(115,140)	(75,309)
63	280
-	550
40,000	40,000
56,635	65,019
6,139	9,630
(9,700)	(11,002)
93,137	104,477
(22,003)	29,168
999,283	970,115
(69,214)	-
930,069	970,115
$ 908,066	$ 999,283

LINCOLN COUNTY, NEVADA
NONMAJOR ENTERPRISE FUNDS
COMBINING STATEMENT OF CASH FLOWS
Year Ended June 30, 2018
With Comparative Total for June 30, 2017

	Pioche Public Water Utility	Pioche Public Sewer Utility
Cash flows from operating activities:		
Cash received from customers	$ 137,324	$ 111,932
Cash paid for services and supplies	(93,157)	(32,599)
Cash paid for salaries and benefits	(71,375)	(44,052)
Net cash provided (used) by operating activities	(27,208)	35,281
Cash flows from noncapital financing activities:		
Operating transfers in/out	-	-
Cash flows from capital and related financing activities:		
Purchases of capital assets	-	-
Miscellaneous fees	-	-
Capital fees	34,372	22,263
Custom fees	4,916	1,223
Debt retirement	(18,873)	(3,021)
Interest paid	(1,875)	(8,147)
Net cash provided (used) by capital and related financing activities	18,540	12,318
Cash flows from investing activities:		
Investment income	40	104
Net change in cash and cash equivalents	(8,628)	47,703
Cash:		
Beginning of year	152,053	143,114
End of year	$ 143,425	$ 190,817
Reconciliation of operating income (loss) to net cash provided (used) by operating activities:		
Operating income (loss)	$ (68,740)	$ 13,619
Adjustments to reconcile operating income (loss) to net cash provided (used) by operating activities:		
Depreciation expense	27,008	23,664
(Increase) decrease in accounts receivable	(41)	(1,371)
Increase (decrease) in accounts payable	10,903	(2,075)
Increase (decrease) in accrued payroll and benefits	1,898	909
Increase (decrease) in compensated absences	(364)	(186)
Increase (decrease) in net pension liability	(5,341)	(2,654)
Increase (decrease) in net pension expense	6,394	2,811
Increase (decrease) in OPEB liability	30,930	30,929
Increase (decrease) in OPEB expense	(30,365)	(30,365)
Increase (decrease) in customer deposits	510	-
Total adjustments	41,532	21,662
Net cash provided (used) by operating activities	$ (27,208)	$ 35,281

Building Department	Totals 2018	2017
$ 17,849	$ 267,105	$ 283,479
(7,545)	(133,301)	(123,878)
(68,281)	(183,708)	(191,885)
(57,977)	(49,904)	(32,284)
40,000	40,000	40,000
-	-	(21,734)
-	-	550
-	56,635	65,019
-	6,139	9,630
-	(21,894)	(20,848)
-	(10,022)	(11,067)
-	30,858	21,550
70	214	20
(17,907)	21,168	29,286
50,999	346,166	316,880
$ 33,092	$ 367,334	$ 346,166
$ (60,019)	$ (115,140)	$ (75,309)
881	51,553	52,120
-	(1,412)	(4,805)
(712)	8,116	(5,848)
411	3,218	(1,791)
1,303	753	(1,182)
(5,075)	(13,070)	34,100
5,234	14,439	(30,189)
-	61,859	-
-	(60,730)	-
-	510	620
2,042	65,236	43,025
$ (57,977)	$ (49,904)	$ (32,284)

LINCOLN COUNTY, NEVADA
NONMAJOR PIOCHE PUBLIC UTILITY WATER ENTERPRISE FUND
COMPARATIVE STATEMENT OF NET POSITION
June 30, 2018 and 2017

	2018	2017
ASSETS		
Current assets:		
Pooled cash and investments	$ 122,677	$ 131,305
Accounts receivable	24,215	24,174
Interest receivable	128	141
Total current assets	147,020	155,620
Restricted assets:		
Cash	20,748	20,748
Capital assets:		
Land	2,000	2,000
Property, plant and equipment (net of depreciation)	476,679	503,687
Total capital assets	478,679	505,687
Total assets	646,447	682,055
DEFERRED OUTFLOWS OF RESOURCES		
Deferred pension charge	12,927	21,809
Deferred opeb	1,762	-
Total deferred outflows of resources	14,689	21,809
LIABILITIES		
Current liabilities:		
Accounts payable	20,770	9,867
Accrued payroll and benefits	5,099	3,201
Customer deposits	1,760	1,250
Accrued compensated absences	4,640	5,060
Total current liabilities	32,269	19,378
Current liabilities payable from restricted assets:		
Revenue bond	19,537	18,586
Non-current liabilities:		
Accrued compensated absences	3,297	3,241
Net pension liability	88,999	94,340
OPEB liability	30,930	-
Revenue bond	7,638	27,462
Total non-current liabilities	130,864	125,043
Total liabilities	182,670	163,007
DEFERRED INFLOWS OF RESOURCES		
Deferred pension charge	9,634	8,024
NET POSITION		
Invested in capital assets, net of related debt	451,504	459,639
Restricted for revenue bond debt service	20,748	20,748
Unrestricted	(3,420)	52,446
Total net position	$ 468,832	$ 532,833

LINCOLN COUNTY, NEVADA
NONMAJOR PIOCHE PUBLIC UTILITY WATER ENTERPRISE FUND
SCHEDULE OF REVENUES, EXPENSES, AND CHANGES IN NET POSITION - BUDGET (GAAP BASIS) AND ACTUAL
Year Ended June 30, 2018
(With Comparative Actual Amounts for Year Ended June 30, 2017)

	2018 Budget	2018 Actual	Variance-Positive (Negative)	2017 Actual
Operating revenues:				
Water	$ 190,000	$ 136,855	$ (53,145)	$ 187,589
Operating expenses:				
Water:				
Salaries and wages	77,104	48,616	28,488	56,082
Employee benefits	30,226	25,911	4,315	28,595
Services and supplies	87,256	104,060	(16,804)	84,043
Depreciation	32,000	27,008	4,992	27,147
Total operating expenses	226,586	205,595	20,991	195,867
Operating income (loss)	(36,586)	(68,740)	(32,154)	(8,278)
Non-operating revenues (expenses):				
Investment income	50	27	(23)	26
Water capital fees	34,000	34,372	372	43,383
Water custom fees	5,000	4,916	(84)	7,473
Interest expense	(2,162)	(1,875)	287	(2,793)
Total non-operating revenues (expenses)	36,888	37,440	552	48,089
Change in net position	$ 302	(31,300)	$ (31,602)	39,811
Net Position:				
Beginning of year		532,833		493,022
Restatement per GASB 75		(32,701)		-
Beginning balance as restated		500,132		493,022
End of year		$ 468,832		$ 532,833

LINCOLN COUNTY, NEVADA
NONMAJOR PIOCHE PUBLIC UTILITY WATER ENTERPRISE FUND
COMPARATIVE STATEMENT OF CASH FLOWS
June 30, 2018 and 2017

	2018	2017
Cash flows from operating activities:		
Cash received from customers	$ 137,324	$ 183,041
Cash paid for services and supplies	(93,157)	(88,969)
Cash paid for salaries and benefits	(71,375)	(83,951)
Net cash provided (used) by operating activities	(27,208)	10,121
Cash flows from capital and related financing activities:		
Purchases of capital assets	-	(19,143)
Capital fees	34,372	43,383
Custom fees	4,916	7,473
Debt retirement	(18,873)	(17,955)
Interest paid	(1,875)	(2,793)
Net cash provided (used) by capital and related financing activities	18,540	10,965
Cash flows from investing activities:		
Investment income	40	(37)
Net change in cash and cash equivalents	(8,628)	21,049
Cash:		
Beginning of year	152,053	131,004
End of year	$ 143,425	$ 152,053
Reconciliation of operating income (loss) to net cash provided (used) by operating activities:		
Operating income (loss)	$ (68,740)	$ (8,278)
Adjustments to reconcile operating income (loss) to net cash provided (used) by operating activities:		
Depreciation expense	27,008	27,147
(Increase) decrease in accounts receivable	(41)	(5,168)
Increase (decrease) in accounts payable	10,903	(4,926)
Increase (decrease) in accrued payroll and benefits	1,898	(1,784)
Increase (decrease) in compensated absences	(364)	(94)
Increase (decrease) in net pension liability	(5,341)	14,311
Increase (decrease) in net pension expense	6,394	(11,707)
Increase (decrease) in OPEB liability	30,930	-
Increase (decrease) in OPEB expense	(30,365)	-
Increase (decrease) in customer deposits	510	620
Total adjustments	41,532	18,399
Net cash provided (used) by operating activities	$ (27,208)	$ 10,121

LINCOLN COUNTY, NEVADA
NONMAJOR PIOCHE PUBLIC UTILITY SEWER ENTERPRISE FUND
COMPARATIVE STATEMENT OF NET POSITION
June 30, 2018 and 2017

	2018	2017
ASSETS		
Current assets:		
Pooled cash and investments	$ 179,327	$ 131,624
Accounts receivable	10,768	9,397
Interest receivable	139	214
Total current assets	190,234	141,235
Restricted assets:		
Cash	11,490	11,490
Capital assets:		
Land	10,000	10,000
Property, plant and equipment (net of depreciation)	570,888	594,552
Total capital assets	580,888	604,552
Total assets	782,612	757,277
DEFERRED OUTFLOWS OF RESOURCES		
Deferred pension charge	7,210	11,085
Deferred opeb	1,762	-
Total deferred outflows of resources	8,972	11,085
LIABILITIES		
Current liabilities:		
Accounts payable	1,364	3,439
Accrued payroll and benefits	2,782	1,873
Accrued compensated absences	2,203	2,101
Accrued interest payable	1,336	1,658
Total current liabilities	7,685	9,071
Current liabilities payable from restricted assets:		
Revenue bond	3,154	3,021
Non-current liabilities:		
Accrued compensated absences	1,864	2,152
Net pension liability	45,565	48,219
OPEB liability	30,929	-
Revenue bond	180,783	183,937
Total non-current liabilities	259,141	234,308
Total liabilities	269,980	246,400
DEFERRED INFLOWS OF RESOURCES		
Deferred pension charge	5,077	3,945
NET POSITION		
Invested in capital assets, net of related debt	396,951	417,594
Restricted for revenue bond debt service	11,490	11,490
Unrestricted	108,086	88,933
Total net position	$ 516,527	$ 518,017

LINCOLN COUNTY, NEVADA
NONMAJOR PIOCHE PUBLIC UTILITY SEWER ENTERPRISE FUND
SCHEDULE OF REVENUES, EXPENSES, AND CHANGES IN NET POSITION - BUDGET (GAAP BASIS) AND ACTUAL
Year Ended June 30, 2018
(With Comparative Actual Amounts for Year Ended June 30, 2017)

	2018 Budget	2018 Actual	Variance-Positive (Negative)	2017 Actual
Operating revenues:				
Sewer	$ 89,000	$ 113,303	$ 24,303	$ 82,442
Operating expenses:				
Sewer				
Salaries and wages	38,355	29,548	8,807	29,158
Employee benefits	14,615	15,948	(1,333)	14,442
Services and supplies	37,693	30,524	7,169	29,503
Depreciation	27,000	23,664	3,336	24,092
Total operating expenses	117,663	99,684	17,979	97,195
Operating income (loss)	(28,663)	13,619	42,282	(14,753)
Non-operating revenues (expenses):				
Investment income	50	29	(21)	220
Sewer capital fees	20,000	22,263	2,263	21,636
Sewer custom fees	-	1,223	1,223	2,157
Interest expense	(8,147)	(7,825)	322	(8,209)
Total non-operating revenues (expenses)	11,903	15,690	3,787	15,804
Change in net position	$ (16,760)	29,309	$ 46,069	1,051
Net Position:				
Beginning of year		518,017		516,966
Restatement per GASB 75		(30,799)		-
Beginning balance as restated		487,218		516,966
End of year		$ 516,527		$ 518,017

LINCOLN COUNTY, NEVADA
NONMAJOR PIOCHE PUBLIC UTILITY SEWER ENTERPRISE FUND
COMPARATIVE STATEMENT OF CASH FLOWS
June 30, 2018 and 2017

	2018	2017
Cash flows from operating activities:		
Cash received from customers	$ 111,932	$ 82,805
Cash paid for services and supplies	(32,599)	(31,363)
Cash paid for salaries and benefits	(44,052)	(44,089)
Net cash provided (used) by operating activities	35,281	7,353
Cash flows from capital and related financing activities:		
Purchases of capital assets	-	(2,591)
Capital fees	22,263	21,636
Custom fees	1,223	2,157
Debt retirement	(3,021)	(2,893)
Interest paid	(8,147)	(8,274)
Net cash provided (used) by capital and related financing activities	12,318	10,035
Cash flows from investing activities:		
Investment income	104	72
Net change in cash and cash equivalents	47,703	17,460
Cash:		
Beginning of year	143,114	125,654
End of year	$ 190,817	$ 143,114
Reconciliation of operating income (loss) to net cash provided (used) by operating activities:		
Operating income (loss)	$ 13,619	$ (14,753)
Adjustments to reconcile operating income (loss) to net cash provided (used) by operating activities:		
Depreciation expense	23,664	24,092
(Increase) decrease in accounts receivable	(1,371)	363
Increase (decrease) in accounts payable	(2,075)	(1,860)
Increase (decrease) in accrued payroll and benefits	909	(802)
Increase (decrease) in compensated absences	(186)	(49)
Increase (decrease) in net pension liability	(2,654)	7,037
Increase (decrease) in net pension expense	2,811	(6,675)
Increase (decrease) in OPEB liability	30,929	-
Increase (decrease) in OPEB expense	(30,365)	-
Total adjustments	21,662	22,106
Net cash provided (used) by operating activities	$ 35,281	$ 7,353

LINCOLN COUNTY, NEVADA
NONMAJOR BUILDING DEPARTMENT ENTERPRISE FUND
COMPARATIVE STATEMENT OF NET POSITION
June 30, 2018 and 2017

	2018	2017
ASSETS		
Current assets:		
Pooled cash and investments	$ 33,092	$ 50,999
Interest receivable	29	92
Capital assets:		
Property and equipment (net of depreciation)	951	1,832
Total assets	34,072	52,923
DEFERRED OUTFLOWS OF RESOURCES		
Deferred pension charge	17,928	23,562
LIABILITIES		
Current liabilities:		
Accounts payable	599	1,311
Accrued payroll and benefits	6,071	5,660
Accrued compensated absences	6,183	5,492
Total current liabilities	12,853	12,463
Non-current liabilities:		
Accrued compensated absences	3,790	3,178
Net pension liability	100,186	105,261
Total non-current liabilities	103,976	108,439
Total liabilities	116,829	120,902
DEFERRED INFLOWS OF RESOURCES		
Deferred pension charge	12,464	7,150
NET POSITION		
Invested in capital assets, net of related debt	951	1,832
Unrestricted	(78,244)	(53,399)
Total net position	$ (77,293)	$ (51,567)

LINCOLN COUNTY, NEVADA
NONMAJOR BUILDING DEPARTMENT ENTERPRISE FUND
SCHEDULE OF REVENUES, EXPENSES, AND CHANGES IN NET POSITION - BUDGET (GAAP BASIS) AND ACTUAL
Year Ended June 30, 2018
(With Comparative Actual Amounts for Year Ended June 30, 2017)

	2018 Budget	2018 Actual	Variance-Positive (Negative)	2017 Actual
Operating revenues:				
Charges for services	$ 25,000	$ 17,849	$ (7,151)	$ 18,183
Operating expenses:				
Public works:				
Salaries and wages	52,163	41,213	10,950	36,284
Employee benefits	15,685	28,941	(13,256)	28,262
Service and supplies	11,650	6,833	4,817	4,484
Depreciation	1,000	881	119	881
Total operating expenses	80,498	77,868	2,630	69,911
Operating income (loss)	(55,498)	(60,019)	(4,521)	(51,728)
Non-operating revenues (expenses):				
Investment income	-	7	7	34
Operating transfers in	40,000	40,000	-	40,000
Total non-operating revenues (expenses)	40,000	40,007	7	40,034
Change in net position	$ (15,498)	(20,012)	(4,514)	(11,694)
Net Position:				
Beginning of year		(51,567)		(39,873)
Restatement per GASB 75		(5,714)		-
Beginning balance as restated		(57,281)		(39,873)
End of year		$ (77,293)		$ (51,567)

LINCOLN COUNTY, NEVADA
NONMAJOR BUILDING DEPARTMENT ENTERPRISE FUND
COMPARATIVE STATEMENT OF CASH FLOWS
Years Ended June 30, 2018 and 2017

	2018	2017
Cash flows from operating activities:		
Cash received from customers	$ 17,849	$ 18,183
Cash paid for services and supplies	(7,545)	(3,546)
Cash paid for salaries and benefits	(68,281)	(63,845)
Net cash provided (used) by operating activities	(57,977)	(49,208)
Cash flows from noncapital financing activities:		
Operating transfers in	40,000	40,000
Cash flows from investing activities:		
Investment income	70	(15)
Net change in cash and cash equivalents	(17,907)	(9,223)
Cash:		
Beginning of year	50,999	60,222
End of year	$ 33,092	$ 50,999
Reconciliation of operating income to net cash provided (used) by operating activities:		
Operating income (loss)	$ (60,019)	$ (52,278)
Adjustments to reconcile operating income to net cash provided (used) by operating activities:		
Depreciation expense	881	881
Increase (decrease) in accounts payable	(712)	938
Increase (decrease) in accrued payroll and benefits	411	795
Increase (decrease) in compensated absences	1,303	(1,039)
Increase (decrease) in net pension liability	(5,075)	12,752
Increase (decrease) in net pension expense	5,234	(11,807)
Total adjustments	2,042	2,520
Net cash provided (used) by operating activities	$ (57,977)	$ (49,758)

LINCOLN COUNTY, NEVADA
AGENCY FUNDS
COMBINING STATEMENT OF NET POSITION
June 30, 2018
(With Comparative Totals for June 30, 2017)

	Tax Trust	State	Caliente City	Caliente City Capital Projects	Fish and Game
ASSETS					
Pooled cash and investments	$ 21,294	$ 74,790	$ 92	$ 28,162	$ 2,054
Interest receivable	37	-	2	-	-
Taxes receivable	-	6,511	2,597	-	-
Due from other governments	-	-	-	-	-
Total assets	$ 21,331	$ 81,301	$ 2,691	$ 28,162	$ 2,054
LIABILITIES					
Amount held for others	$ 21,331	$ 75,959	$ 1,000	$ 28,162	$ 2,054
Unavailable revenue - taxes	-	5,342	1,691	-	-
Total liabilities	$ 21,331	$ 81,301	$ 2,691	$ 28,162	$ 2,054

Range	School General	School Debt Service	Lincoln County TV District	Pahranagat Fire District	Public Land	Hospital
$ 7,788	$ 4,120	$ 63,403	$ 169	$ 1,282	$ 208	$ 1,472
98	-	863	-	18	-	-
-	25,057	7,454	-	625	-	8,950
-	1,638	14,621	-	9,576	-	585
$ 7,886	$ 30,815	$ 86,341	$ 169	$ 11,501	$ 208	$ 11,007
$ 7,886	$ 10,259	$ 80,226	$ 169	$ 11,085	$ 208	$ 3,665
-	20,556	6,115	-	416	-	7,342
$ 7,886	$ 30,815	$ 86,341	$ 169	$ 11,501	$ 208	$ 11,007

LINCOLN COUNTY, NEVADA
AGENCY FUNDS
COMBINING STATEMENT OF NET POSITION
June 30, 2018
(With Comparative Totals for June 30, 2017)

	Panaca Fire Protection District	Pioche Fire District	Pioche Fire District Capital Projects	Pioche Fire Emergency	Coyote Springs GID
ASSETS					
Pooled cash and investments	$ 10,814	$ 34,847	$ 1,546	$ 3,009	$ 102,997
Interest receivable	148	340	19	96	1,400
Taxes receivable	2,130	1,010	-	-	-
Due from other governments	-	5,128	-	-	-
Total assets	$ 13,092	$ 41,325	$ 1,565	$ 3,105	$ 104,397
LIABILITIES					
Amount held for others	$ 11,570	$ 40,356	$ 1,565	$ 3,105	$ 104,397
Unavailable revenue - taxes	1,522	969	-	-	-
Total liabilities	$ 13,092	$ 41,325	$ 1,565	$ 3,105	$ 104,397

SB 371	SLCHCP GID	Lincoln County Fire Protection District	Lincoln County Fire Protection District Emergency	Totals 2018	Totals 2017
$ 25	$ 158,238	$ 154,994	$ 25,012	$ 696,316	$ 1,040,361
-	2,154	4,892	827	10,894	9,579
-	-	2,385	-	56,719	49,198
-	-	-	-	31,548	39,478
$ 25	$ 160,392	$ 162,271	$ 25,839	$ 795,477	$ 1,138,616
$ 25	$ 160,392	$ 160,029	$ 25,839	$ 749,282	$ 1,096,972
-	-	2,242	-	46,195	41,644
$ 25	$ 160,392	$ 162,271	$ 25,839	$ 795,477	$ 1,138,616

LINCOLN COUNTY, NEVADA
COMBINING STATEMENT OF CHANGES IN ASSETS
AND LIABILITIES - ALL AGENCY FUNDS
Year Ended June 30, 2018

	Balance July 1, 2017	Additions	Deductions	Balance June 30, 2018
Tax Trust				
Assets:				
Pooled cash and investments	$ 38,988	$ 21,316	$ 39,010	$ 21,294
Interest receivable	91	37	91	37
Total assets	$ 39,079	$ 21,353	$ 39,101	$ 21,331
Liabilities:				
Amount held for others	$ 39,079	$ 21,353	$ 39,101	$ 21,331
State				
Assets:				
Pooled cash and investments	$ 84,196	$ 645,399	$ 654,805	$ 74,790
Taxes receivable	5,485	6,511	5,485	6,511
Total assets	$ 89,681	$ 651,910	$ 660,290	$ 81,301
Liabilities:				
Amount held for others	$ 84,997	$ 646,568	$ 655,606	$ 75,959
Unavailable revenue - taxes	4,684	5,342	4,684	5,342
Total liabilities	$ 89,681	$ 651,910	$ 660,290	$ 81,301
Caliente City				
Assets:				
Pooled cash and investments	$ 2,068	$ 147,543	$ 149,519	$ 92
Interest receivable	31	2	31	2
Taxes receivable	4,386	2,597	4,386	2,597
Total assets	$ 6,485	$ 150,142	$ 153,936	$ 2,691
Liabilities:				
Amount held for others	$ 3,274	$ 148,451	$ 150,725	$ 1,000
Unavailable revenue - taxes	3,211	1,691	3,211	1,691
Total liabilities	$ 6,485	$ 150,142	$ 153,936	$ 2,691
Caliente City Capital Projects				
Assets:				
Pooled cash and investments	$ 20,523	$ 7,639	$ -	$ 28,162
Liabilities:				
Amount held for others	$ 20,523	$ 7,639	$ -	$ 28,162
Fish and Game				
Assets:				
Pooled cash and investments	$ 2,970	$ 1,770	$ 2,686	$ 2,054
Liabilities:				
Amount held for others	$ 2,970	$ 1,770	$ 2,686	$ 2,054

LINCOLN COUNTY, NEVADA
COMBINING STATEMENT OF CHANGES IN ASSETS
AND LIABILITIES - ALL AGENCY FUNDS (CONTINUED)
Year Ended June 30, 2018

	Balance July 1, 2017	Additions	Deductions	Balance June 30, 2018
Range				
Assets:				
Pooled cash and investments	$ 8,120	$ 44,822	$ 45,154	$ 7,788
Interest receivable	122	98	122	98
Total assets	$ 8,242	$ 44,920	$ 45,276	$ 7,886
Liabilities:				
Amount held for others	$ 8,242	$ 44,920	$ 45,276	$ 7,886
School General				
Assets:				
Pooled cash and investments	$ 207,767	$ 1,658,030	$ 1,861,677	$ 4,120
Taxes receivable	21,102	25,057	21,102	25,057
Due from other governments	2,013	1,638	2,013	1,638
Total assets	$ 230,882	$ 1,684,725	$ 1,884,792	$ 30,815
Liabilities:				
Amount held for others	$ 212,856	$ 1,664,169	$ 1,866,766	$ 10,259
Unavailable revenue - taxes	18,026	20,556	18,026	20,556
Total liabilities	$ 230,882	$ 1,684,725	$ 1,884,792	$ 30,815
School Debt Service				
Assets:				
Pooled cash and investments	$ 67,418	$ 494,534	$ 498,549	$ 63,403
Interest receivable	1,076	863	1,076	863
Taxes receivable	6,276	7,454	6,276	7,454
Due from other governments	22,273	14,621	22,273	14,621
Total assets	$ 97,043	$ 517,472	$ 528,174	$ 86,341
Liabilities:				
Amount held for others	$ 91,682	$ 511,357	$ 522,813	$ 80,226
Unavailable revenue - taxes	5,361	6,115	5,361	6,115
Total liabilities	$ 97,043	$ 517,472	$ 528,174	$ 86,341
Lincoln County TV District				
Assets:				
Pooled cash and investments	$ 2,957	$ 53,474	$ 56,262	$ 169
Liabilities:				
Amount held for others	$ 2,957	$ 53,474	$ 56,262	$ 169

LINCOLN COUNTY, NEVADA
COMBINING STATEMENT OF CHANGES IN ASSETS
AND LIABILITIES - ALL AGENCY FUNDS (CONTINUED)
Year Ended June 30, 2018

	Balance July 1, 2017	Additions	Deductions	Balance June 30, 2018
Pahranagat Fire District				
Assets:				
Pooled cash and investments	$ 3,147	$ 123,360	$ 125,225	$ 1,282
Interest receivable	39	18	39	18
Taxes receivable	776	625	776	625
Due from other governments	9,459	9,576	9,459	9,576
Total assets	$ 13,421	$ 133,579	$ 135,499	$ 11,501
Liabilities:				
Amount held for others	$ 12,686	$ 133,163	$ 134,764	$ 11,085
Unavailable revenue - taxes	735	416	735	416
Total liabilities	$ 13,421	$ 133,579	$ 135,499	$ 11,501
Public Land				
Assets:				
Pooled cash and investments	$ 208	$ -	$ -	$ 208
Liabilities:				
Amount held for others	$ 208	$ -	$ -	$ 208
Hospital				
Assets:				
Pooled cash and investments	$ 74,211	$ 584,665	$ 657,404	$ 1,472
Taxes receivable	7,533	8,950	7,533	8,950
Due from other governments	719	585	719	585
Total assets	$ 82,463	$ 594,200	$ 665,656	$ 11,007
Liabilities:				
Amount held for others	$ 76,026	$ 586,858	$ 659,219	$ 3,665
Unavailable revenue - taxes	6,437	7,342	6,437	7,342
Total liabilities	$ 82,463	$ 594,200	$ 665,656	$ 11,007
Panaca Fire Protection District				
Assets:				
Pooled cash and investments	$ 11,813	$ 48,907	$ 49,906	$ 10,814
Interest receivable	187	148	187	148
Taxes receivable	1,419	2,130	1,419	2,130
Total assets	$ 13,419	$ 51,185	$ 51,512	$ 13,092
Liabilities:				
Amount held for others	$ 12,293	$ 49,663	$ 50,386	$ 11,570
Unavailable revenue - taxes	1,126	1,522	1,126	1,522
Total liabilities	$ 13,419	$ 51,185	$ 51,512	$ 13,092

LINCOLN COUNTY, NEVADA
COMBINING STATEMENT OF CHANGES IN ASSETS
AND LIABILITIES - ALL AGENCY FUNDS (CONTINUED)
Year Ended June 30, 2018

	Balance July 1, 2017	Additions	Deductions	Balance June 30, 2018
Pioche Fire District				
Assets:				
Pooled cash and investments	$ 40,193	$ 50,588	$ 55,934	$ 34,847
Interest receivable	416	340	416	340
Taxes receivable	1,189	1,010	1,189	1,010
Due from other governments	5,014	5,128	5,014	5,128
Total assets	$ 46,812	$ 57,066	$ 62,553	$ 41,325
Liabilities:				
Amount held for others	$ 45,779	$ 56,097	$ 61,520	$ 40,356
Unavailable revenue - taxes	1,033	969	1,033	969
Total liabilities	$ 46,812	$ 57,066	$ 62,553	$ 41,325
Pioche Fire District Capital Projects				
Assets:				
Pooled cash and investments	$ 1,734	$ 13	$ 201	$ 1,546
Interest receivable	28	19	28	19
Total assets	$ 1,762	$ 32	$ 229	$ 1,565
Liabilities:				
Amount held for others	$ 1,762	$ 32	$ 229	$ 1,565
Pioche Fire Emergency				
Assets:				
Pooled cash and investments	$ 3,017	$ -	$ 8	$ 3,009
Interest receivable	48	96	48	96
Total assets	$ 3,065	$ 96	$ 56	$ 3,105
Liabilities:				
Amount held for others	$ 3,065	$ 96	$ 56	$ 3,105
Coyote Springs GID				
Assets:				
Pooled cash and investments	$ 108,946	$ 29,341	$ 35,290	$ 102,997
Interest receivable	1,745	1,400	1,745	1,400
Total assets	$ 110,691	$ 30,741	$ 37,035	$ 104,397
Liabilities:				
Amount held for others	$ 110,691	$ 30,741	$ 37,035	$ 104,397
SB 371				
Assets:				
Pooled cash and investments	$ -	$ 700	$ 675	$ 25
Liabilities:				
Amount held for others	$ -	$ 700	$ 675	$ 25

LINCOLN COUNTY, NEVADA
COMBINING STATEMENT OF CHANGES IN ASSETS
AND LIABILITIES - ALL AGENCY FUNDS (CONTINUED)
Year Ended June 30, 2018

	Balance July 1, 2017	Additions	Deductions	Balance June 30, 2018
Southeastern Lincoln County Habitat Conservation Plan GID (SLCHCP)				
Assets:				
Pooled cash and investments	$ 177,792	$ 3,707	$ 23,261	$ 158,238
Interest receivable	2,848	2,154	2,848	2,154
Total assets	$ 180,640	$ 5,861	$ 26,109	$ 160,392
Liabilities:				
Amount held for others	$ 180,640	$ 5,861	$ 26,109	$ 160,392
Lincoln County Fire Protection District				
Assets:				
Pooled cash and investments	$ 156,173	$ 186,669	$ 187,848	$ 154,994
Interest receivable	2,498	4,892	2,498	4,892
Taxes receivable	1,032	2,385	1,032	2,385
Total assets	$ 159,703	$ 193,946	$ 191,378	$ 162,271
Liabilities:				
Amount held for others	$ 158,672	$ 191,704	$ 190,347	$ 160,029
Unavailable revenue - taxes	1,031	2,242	1,031	2,242
Total liabilities	$ 159,703	$ 193,946	$ 191,378	$ 162,271
Lincoln County Fire Protection District Emergency Fund				
Assets:				
Pooled cash and investments	$ 28,120	$ -	$ 3,108	$ 25,012
Interest receivable	450	827	450	827
Total assets	$ 28,570	$ 827	$ 3,558	$ 25,839
Liabilities:				
Amount held for others	$ 28,570	$ 827	$ 3,558	$ 25,839
Total all funds				
Assets:				
Pooled cash and investments	$ 1,040,361	$ 4,102,477	$ 4,446,522	$ 696,316
Interest receivable	9,579	10,894	9,579	10,894
Taxes receivable	49,198	56,719	49,198	56,719
Due from other governments	39,478	31,548	39,478	31,548
Total assets	$ 1,138,616	$ 4,201,638	$ 4,544,777	$ 795,477
Liabilities:				
Amount held for others	$ 1,096,972	$ 4,155,443	$ 4,503,133	$ 749,282
Unavailable revenue - taxes	41,644	46,195	41,644	46,195
Total liabilities	$ 1,138,616	$ 4,201,638	$ 4,544,777	$ 795,477

LINCOLN COUNTY, NEVADA
SCHEDULE OF EXPENDITURE OF FEDERAL AWARDS
JUNE 30, 2018

Federal Grantor / Pass-through Grantor / Program Title	Federal CFDA Number	Agency or Federal Pass-through Number	Program Expenditures
U.S. Department of Agriculture			
Passed through the State of Nevada, Department of Agriculture:			
Federal-State Marketing Improvement Program	10.156	14-FSMIP-NV-0009	$ 12,326
Food Distribution Cluster:			
Emergency Food Assistance Program (Administrative Costs)	10.568	FND17-10-12	427
Emergency Food Assistance Program (Food Commodities)	10.569	N/A	9,183
Total Food Distribtuion Cluster			9,610
Passed through State of Nevada Office of the Controller:			
Schools and Roads - Grants to Counties	10.666	N/A	21,231
Direct Programs:			
Community Facilities Loans and Grants	10.766	N/A	15,000
Total U.S. Department of Agriculture			$ 58,167
U.S. Department of Defense			
Direct Programs:			
Airforce Agreement	12.Unknown	FA8240-15-M-R270	$ 122,000
U.S. Department of Interior			
Direct Programs:			
Payments in Lieu of Taxes	15.226	N/A	$ 1,492,482
Fish, Wildlife, and Plant Conservation Resource Management	15.231	L12AC20588	7,938
Southern Nevada Public Land Management	15.235	L16AC00101	466,689
Wildlife Resource Management	15.247	L17AC00085	28,837
National Wildlife Refuge Fund	15.659	N/A	6,515
Passed through the State of Nevada, Office of the Controller:			
Taylor Grazing	15.Unknown	N/A	23,159
Total U.S. Department of Interior			$ 2,025,620
U.S. Department of Justice			
Passed through the State of Nevada, Department of Health and Human Services			
Crime Victim Assistance	16.575	16575-16-023	$ 42,653
Passed through State of Nevada, Department of Public Safety			
Edward Byrne Memorial Justice Assitance Grant Program	16.738	15-JAG-46	16,954
Total U.S. Department of Justice			$ 59,607

See accompanying notes to Schedule of Expenditures of Federal Awards.

Federal Grantor / Pass-through Grantor / Program Title	Federal CFDA Number	Agency or Federal Pass-through Number	Program Expenditures
U.S. Department of Labor			
Passed through Workforce Connections:			
WIOA Cluster:			
WIOA Adult Program	17.258	14-WIA/WIOA-ADW-LCGD-Y4-01	$ 88,340
WIOA Youth Activities	17.259	14-WIA/WIOA-Youth-2-LCGD-Y4-01	187,662
WIOA Dislocated Worker Formula Grants	17.278	14-WIA/WIOA-ADW-LCGD-Y4-01	653
Total WIOA Cluster			276,655
Total U.S. Department of Labor			$ 276,655
U.S. Department of Transportation			
Direct Programs:			
Airport Improvement Program	20.106	3-32-0034-009-2017	$ 692,223
Airport Improvement Program	20.106	3-32-0034-010-2018	2,344
Airport Improvement Program	20.106	3-32-0034-011-2018	318
Airport Improvement Program	20.106	3-32-0016-012-2017	494,323
			1,189,208
Passed through the State of Nevada, Department of Transportation:			
Formula Grants for Rural Areas	20.509	PR-206-04-802	3,946
Formula Grants for Rural Areas	20.509	PR-516-17-802	34,108
Formula Grants for Rural Areas	20.509	PR-606-16-802	11,811
			49,865
Passed through the State of Nevada, Department of Public Safety:			
Highway Safety Cluster:			
State and Community Highway Safety	20.600	JF-2017-LICSO-00026	768
State and Community Highway Safety	20.600	JF-2018-LICSO-00014	7,423
State and Community Highway Safety	20.600	LFD-2018-LICSO-0008	9,974
			18,165
National Priority Safety Programs	20.616	JF-2017-LICSO-00026	7,591
National Priority Safety Programs	20.616	JF-2018-LICSO-00014	518
			8,109
Total Highway Safety Cluster			26,274
Total U.S. Department of Transportation			$ 1,265,347
Institute of Museum and Library Services			
Passed through the Nevada State Library, Archives, and Public Records:			
Grants to States	45.310	45310-17	$ 2,804
Total Institute of Museum and Library Services			$ 2,804

See accompanying notes to Schedule of Expenditures of Federal Awards.

Federal Grantor / Pass-through Grantor / Program Title	Federal CFDA Number	Agency or Federal Pass-through Number	Program Expenditures
U.S. Department of Energy			
Passed through the State of Nevada Department of Public Safety:			
Environmental Remediation and Waste Procesing and Disposal	81.104	8110417	$ 50,935
Environmental Remediation and Waste Procesing and Disposal	81.104	8110418E-7018	3,446
			54,381
Misc. Federal Assistance Actions	81.502	8150215A	37,293
Misc. Federal Assistance Actions	81.502	8150216A	72,018
			109,311
Direct Programs:			
Impact Alleviation Program	81.Unknown	N/A	32,506
Total U.S. Department of Energy			$ 196,198
U.S. Department of Health and Human Services			
Passed through the State of Nevada Department of Health and Human Services:			
Aging Cluster:			
Special Programs for the Aging, Title III Part B, Grants for Supportive Services and Senior Centers	93.044	10-000-02-BC-18	$ 5,425
Special Programs for the Aging, Title III Part C, Nutrition Services	93.045	10-000-04-24-17	18,091
Special Programs for the Aging, Title III Part C, Nutrition Services	93.045	10-000-04-24-18	37,899
Special Programs for the Aging, Title III Part C, Nutrition Services	93.045	10-000-07-13-17	7,500
Special Programs for the Aging, Title III Part C, Nutrition Services	93.045	10-000-07-1X-18	21,888
			85,378
Nutrition Services Incentive Program	93.053	10-000-57-NX-17	9,253
Nutrition Services Incentive Program	93.053	10-000-57-NX-18	10,852
			20,105
Aging Cluster Total			110,908
Passed through the State of Nevada Department of Health and Human Services:			
Community Services Block Grant	93.569	5109	56,305
Total U.S. Department of Health and Human Services			$ 167,213
U.S. Department of Homeland Security			
Passed through the State of Nevada, Department of Public Safety:			
Emergency Management Performance Grants	97.042	9704217	$ 5,540
Emergency Management Performance Grants	97.042	9704218	18,941
Total U.S. Department of Homeland Security			$ 24,481
Total Federal Financial Assistance			$ 4,198,092

See accompanying notes to Schedule of Expenditures of Federal Awards.

NOTE 1 - BASIS OF PRESENTATION

The accompanying schedule of expenditures of federal awards (the Schedule) includes the federal grant activity of Lincoln County, Nevada (the county) under programs of the federal government for the year ended June 30, 2018. The information in this Schedule is presented in accordance with the requirements of Title 2 U.S. *Code of Federal Regulations* Part 200, *Uniform Administrative Requirements, Cost Principles, and Audit Requirements for Federal Awards* (Uniform Guidance). Because the Schedule presents only a selected portion of the operations of the County, it is not intended to and does not present the financial position, changes in net position, or cash flows of Lincoln County, Nevada.

NOTE 2 – SUMMARY OF SIGNIFICANT ACCOUNTING POLICIES

(A) Expenditures reported on the Schedule are reported on the modified accrual basis of accounting.
(B) Pass-through entity identifying numbers are presented where available.
(C) Lincoln County, Nevada has elected not to use the 10% De Minimis indirect cost rate allowed under the Uniform Guidelines.

NOTE 3 - FOOD DISTRIBUTION

Non-monetary assistance is reported in the schedule at the fair market value of the commodities received and disbursed. At June 30, 2018 the County had food commodities totaling $0.00 in inventory.

NOTE 4 - U.S. DEPARTMENT OF AGRICULTURE

The County issued a single registered Water Revenue bond purchased by the U.S. Department of Agriculture (CFDA 10.760). The following is a summary of activity for the year:

Balance at July 1, 2017	Additions	Deletions	Balance at June 30, 2018
$ 46,048	$ 0	$ 18,873	$ 27,175

The County issued a single registered Sewer Revenue bond purchased by the U.S. Department of Agriculture (CFDA 10.760). The following is a summary of activity for the year:

Balance at July 1, 2017	Additions	Deletions	Balance at June 30, 2018
$ 186,958	$ 0	$ 3,021	$ 183,937

FINANCIAL STATEMENT FINDINGS

There were no financial statement findings.

FINDINGS AND QUESTIONED COSTS - MAJOR FEDERAL AWARDS PROGRAMS

There were no findings for federal award programs.

DANIEL C. McARTHUR, LTD
Certified Public Accountant

Quail Park III • 501 So. Rancho Dr., Ste. E-30 • Las Vegas, NV 89106 • (702) 385-1899 • (702) 385-9619

INDEPENDENT AUDITOR'S REPORT ON INTERNAL CONTROL OVER FINANCIAL REPORTING AND ON COMPLIANCE AND OTHER MATTERS BASED ON AN AUDIT OF FINANCIAL STATEMENTS PERFORMED IN ACCORDANCE WITH *GOVERNMENT AUDITING STANDARDS*

Honorable Board of County Commissioners
Lincoln County, Nevada
Pioche, Nevada

We have audited, in accordance with the auditing standards generally accepted in the United States of America and the standards applicable to financial audits contained in *Government Auditing Standards*, issued by the Comptroller General of the United States, the financial statements of the governmental activities, the business-type activities, each major fund, and the aggregate remaining fund information of Lincoln County, Nevada (the County), as of and for the year ended June 30, 2018, and the related notes to the financial statements, which collectively comprise the County's basic financial statements, and have issued our report thereon dated November 20, 2018.

Internal Control over Financial Reporting

In planning and performing our audit of the financial statements, we considered the County's internal control over financial reporting (internal control) to determine the audit procedures that are appropriate in the circumstances for the purpose of expressing our opinions on the financial statements, but not for the purpose of expressing an opinion on the effectiveness of the County's internal control. Accordingly, we do not express an opinion on the effectiveness of the County's internal control.

A *deficiency in internal control* exists when the design or operation of a control does not allow management or employees, in the normal course of performing their assigned functions, to prevent, or detect and correct misstatements on a timely basis. A *material weakness* is a deficiency, or a combination of deficiencies, in internal control, such that there is a reasonable possibility that a material misstatement of the entity's financial statements will not be prevented, or detected and corrected on a timely basis. A *significant deficiency* is a deficiency, or a combination of deficiencies, in internal control that is less severe than a material weakness, yet important enough to merit attention by those charged with governance.

Our consideration of internal control was for the limited purpose described in the first paragraph of this section and was not designed to identify all deficiencies in internal control that might be material weaknesses or, significant deficiencies. Given these limitations, during our audit we did not identify any deficiencies in internal control that we consider to be material weaknesses. However, material weaknesses may exist that have not been identified.

Compliance and Other Matters

As part of obtaining reasonable assurance about whether the County's financial statements are free from material misstatement, we performed tests of its compliance with certain provisions of laws, regulations, contracts, and grant agreements, noncompliance with which could have a direct and material effect on the determination of financial statement amounts. However, providing an opinion on compliance with those provisions was not an objective of our audit, and accordingly, we do not express such an opinion. The results of our tests disclosed no instances of noncompliance or other matters that are required to be reported under *Government Auditing Standards.*

Purpose of this Report

The purpose of this report is solely to describe the scope of our testing of internal control and compliance and the results of that testing, and not to provide an opinion on the effectiveness of the entity's internal control or on compliance. This report is an integral part of an audit performed in accordance with *Government Auditing Standards* in considering the entity's internal control and compliance. Accordingly, this communication is not suitable for any other purpose.



Las Vegas, Nevada
November 20, 2018

DANIEL C. McARTHUR, LTD
Certified Public Accountant

Quail Park III • 501 So. Rancho Dr., Ste. E-30 • Las Vegas, NV 89106 • (702) 385-1899 • (702) 385-9619

INDEPENDENT AUDITOR'S REPORT ON COMPLIANCE FOR EACH MAJOR PROGRAM AND ON INTERNAL CONTROL OVER COMPLIANCE REQUIRED BY THE UNIFORM GUIDANCE

Honorable Board of County Commissioners
Lincoln County, Nevada
Pioche, Nevada

Report on Compliance for Each Major Federal Program

We have audited Lincoln County, Nevada's (the County) compliance with the types of compliance requirements described in the *OMB Compliance Supplement* that could have a direct and material effect on each of the County's major federal programs for the year ended June 30, 2018. The County's major federal programs are identified in the summary of auditor's results section of the accompanying schedule of findings and questioned costs.

Management's Responsibility

Management is responsible for compliance with federal statutes, regulations, and the terms and conditions of its federal awards applicable to its federal programs.

Auditor's Responsibility

Our responsibility is to express an opinion on compliance for each of the County's major federal programs based on our audit of the types of compliance requirements referred to above. We conducted our audit of compliance in accordance with auditing standards generally accepted in the United States of America; the standards applicable to financial audits contained in *Government Auditing Standards*, issued by the Comptroller General of the United States; and the audit requirements of Title 2 U.S. *Code of Federal Regulations* Part 200, *Uniform Administrative Requirements, Cost Principles, and Audit Requirements for Federal Awards* (Uniform Guidance). Those standards and the Uniform Guidance require that we plan and perform the audit to obtain reasonable assurance about whether noncompliance with the types of compliance requirements referred to above that could have a direct and material effect on a major federal program occurred. An audit includes examining, on a test basis, evidence about the County's compliance with those requirements and performing such other procedures as we considered necessary in the circumstances.

We believe that our audit provides a reasonable basis for our opinion on compliance for each major federal program. However, our audit does not provide a legal determination of the County's compliance.

Opinion on Each Major Federal Program

In our opinion, the County complied, in all material respects, with the types of compliance requirements referred to above that could have a direct and material effect on each of its major federal programs for the year ended June 30, 2018.

Report on Internal Control over Compliance

Management of the County is responsible for establishing and maintaining effective internal control over compliance with the types of compliance requirements referred to above. In planning and performing our audit of compliance, we considered the County's internal control over compliance with the types of requirements that could have a direct and material effect on each major federal program to determine the auditing procedures that are appropriate in the circumstances for the purpose of expressing an opinion on compliance for each major federal program and to test and report on internal control over compliance in accordance with the Uniform Guidance, but not for the purpose of expressing an opinion on the effectiveness of internal control over compliance. Accordingly, we do not express an opinion on the effectiveness of the County's internal control over compliance.

A *deficiency in internal control over compliance* exists when the design or operation of a control over compliance does not allow management or employees, in the normal course of performing their assigned functions, to prevent, or detect and correct, noncompliance with a type of compliance requirement of a federal program on a timely basis. A *material weakness in internal control over compliance* is a deficiency, or combination of deficiencies, in internal control over compliance, such that there is a reasonable possibility that material noncompliance with a type of compliance requirement of a federal program will not be prevented, or detected and corrected, on a timely basis. A *significant deficiency in internal control over compliance* is a deficiency, or combination of deficiencies, in internal control over compliance with a type of compliance requirement of a federal program that is less severe than a material weakness in internal control over compliance, yet important enough to merit attention by those charged with governance.

Our consideration of internal control over compliance was for the limited purpose described in the first paragraph of this section and was not designed to identify all deficiencies in internal control over compliance that might be material weaknesses or significant deficiencies. We did not identify any deficiencies in internal control over compliance that we consider to be material weaknesses. However, material weaknesses may exist that have not been identified.

The purpose of this report on internal control over compliance is solely to describe the scope of our testing of internal control over compliance and the results of that testing based on the requirements of the Uniform Guidance. Accordingly, this report is not suitable for any other purpose.

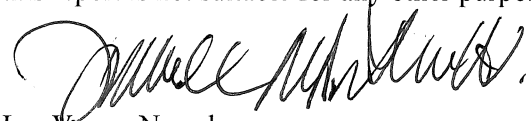

Las Vegas, Nevada
November 20, 2018

SUMMARY OF AUDITOR'S RESULTS

1. The auditor's report expresses an unmodified opinion on whether the financial statements of Lincoln County, Nevada were prepared in accordance with Generally Accepted Accounting Principles.

2. No significant deficiencies relating to the audit of the financial statements are reported in the independent auditor's report on internal control over financial reporting and on compliance and other matters based on an audit of financial statements performed in accordance with *Government Auditing Standards*. No material weaknesses are reported.

3. No instances of noncompliance material to the financial statements of Lincoln County, Nevada, which would be required to be reported in accordance with *Government Auditing Standards*, were disclosed during the audit.

4. No significant deficiencies relating to the audit of the major federal award programs are reported in the independent auditor's report on compliance for each major program and on internal control over compliance required by the Uniform Guidance. No material weaknesses are reported.

5. The auditor's report on compliance for the major federal award programs for Lincoln County, Nevada expresses an unmodified opinion on all major federal programs.

6. There were no audit findings that were required to be reported in accordance with 2 CFR section 200.516(a).

7. The programs tested as major programs were:

Southern Nevada Public Land Management	CFDA No: 15.235
Airport Improvement Program	CFDA No: 20.106

8. The threshold used for distinguishing Types A and B programs was $750,000.

9. Lincoln County, Nevada was determined to be a low-risk auditee.

FINANCIAL STATEMENT FINDINGS

There were no findings for the financial statement.

FINDINGS AND QUESTIONED COSTS-MAJOR FEDERAL AWARDS PROGRAMS

There were no findings for federal awards programs.

DANIEL C. McARTHUR, LTD
Certified Public Accountant

Quail Park III • 501 So. Rancho Dr., Ste. E-30 • Las Vegas, NV 89106 • (702) 385-1899 • (702) 385-9619

INDEPENDENT AUDITOR'S COMMENTS

Honorable Board of County Commissioners
Lincoln County, Nevada
Pioche, Nevada

In connection with our audit of the financial statements of the governmental activities, the business-type activities, each major fund, and the aggregate remaining fund information of Lincoln County, Nevada (the County) as of and for the year ended June 30, 2018, and the related notes to the financial statements, nothing came to our attention that caused us to believe that the County failed to comply with the specific requirements of Nevada Revised Statutes referenced below insofar as they relate to accounting matters except as noted below. However, our audit was not directed primarily toward obtaining knowledge of such noncompliance. Accordingly, had we performed additional procedures, other matters may have come to our attention regarding the County's noncompliance with the requirements of Nevada Revised Statutes noted below, insofar as they relate to accounting matters.

CURRENT YEAR STATUTE COMPLIANCE

Expenditures in Excess of Appropriations

Per NRS 354.626, the County is required to report expenditures that exceeded budgeted appropriations at the function level for the General Fund, Special Revenue Funds, and Capital Project Funds. Enterprise funds may not exceed budget appropriations at the fund level. For the year ending June 30, 2018, the County had the following expenditures over appropriations that are required to be reported.

General Fund – Health function	$ 9,748
Room Tax Fund – Culture and recreation function	$ 27,041
Room Tax Fund – Intergovernmental function	$ 585
Legal Aid Services Fund – Judicial function	$ 4,540
Genetic Marker Fund – General government function	$ 338
Detention Center – Enterprise Fund	$ 140,247

The General Fund over expenditure is related to an increase in the monthly payments for State Health Nurse. The Room Tax Fund over expenditure is related to an increase in Room Tax expenditures for local events and an increase in room tax revenues causing additional payments to the State. The Legal Aid Fund over expenditure is related to unanticipated legal services. Genetic Marker Fund over expenditures were due to an increase in required testing. The Detention Center expenditures were in excess of the authorized budget due to additional costs associated with an increase in inmate populations.

Deficit Fund Balance/Net Position

Airport Special Revenue Fund	$ 269
Detention Center Enterprise Fund	$ 2,359,765
Building Department Enterprise Fund	$ 77,293

The deficit net position of the Detention Center and Building Department Enterprise funds are due to the individual fund's proportionate share of the net pension liability of the Public Employees' Retirement System of the State of Nevada. The Airport fund deficit is due to a short fall in expected revenues.

PROGRESS ON PRIOR YEAR STATUTE COMPLIANCE

The County had similar findings in the current year as listed above.

CURRENT YEAR RECOMMENDATIONS

We noted no material weakness and reported no significant deficiencies in internal controls.

PRIOR YEAR RECOMMENDATIONS

We noted no material weakness and reported no significant deficiencies in internal controls in the prior year.

NEVADA REVISED STATUTE 354.6115 - STABILIZATION FUND

The County created a stabilization fund in accordance with Nevada Revised Statute 354.6115, "Fund to stabilize operations of local government and mitigate effects of natural disaster". The fund is reported on pages 237 and 238 of the financial statements as an "internally reported (budgetary basis) fund reported as part of the General Fund for external reporting purposes. Compliance with Nevada Revised Statutes is contained in Note C1 to the financial statements.

NEVADA REVISED STATUTE 354.5989 – BUSINESS LICENSES

Nevada Revised Statutes 354.624.4(a) requires a schedule of all fees imposed by the County which are subject to the provisions of NRS 354.5989 be addressed by the independent auditor. During the year ended June 30, 2018, the County did not raise fees on business licenses subject to the limitation of NRS 354.5989. The County business fee is $40.

NEVADA REVISED STATUTE 354.59815 – CAPITAL PROJECTS FUND

Capital Improvements Fund

The County established the Capital Improvements Fund in accordance with Nevada Revised Statutes 354.59815. Compliance with Nevada Revised Statutes is contained in Note C1 to the financial statements. The County does not plan to accumulate money in the fund. Projects funded during the year were as follows:

Intergovernmental – Payment to City	$	7,637

Pioche Town Capital Projects Fund

The County established the Pioche Town Capital Projects Fund in accordance with Nevada Revised Statutes 354.59815. Compliance with Nevada Revised Statutes is contained in Note C1 to the financial statements. The County does not plan to accumulate money in the fund. There were no projects funded during the year.

Panaca Town Capital Projects Fund

The County established the Panaca Town Capital Projects Fund in accordance with Nevada Revised Statutes 354.59815. Compliance with Nevada Revised Statutes is contained in Note C1 to the financial statements. The County does not plan to accumulate money in the fund. Projects funded during the year were as follows:

Ballfield improvements	$	4,227

Alamo Town Capital Projects Fund

The County established the Alamo Town Capital Projects Fund in accordance with Nevada Revised Statutes 354.59815. Compliance with Nevada Revised Statutes is contained in Note C1 to the financial statements. The County does not plan to accumulate money in the fund. There were no projects funded during the year.

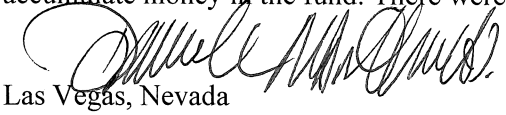

Las Vegas, Nevada
November 20, 2018

Board of County Commissioners
Lincoln County, Nevada
P.O. Box 90 – Pioche, Nevada 89043
Telephone (775) 962-8077

COUNTY COMMISSIONERS
Varlin Higbee, Chair
Jared Brackenbury, Vice Chair
Mike Reese
Keith Pearson
Janine Woodworth

DISTRICT ATTORNEY
Dylan V. Frehner

COUNTY CLERK
Lisa C. Lloyd

Nevada Department of Taxation
1550 College Parkway, Suite 115
Carson City, NV 89706-7937

Lincoln County, Nevada herewith submits the (~~TENTATIVE~~) --- (FINAL) budget for the fiscal year ending June 30, 2024

This budget contains 12 funds, including Debt Service, requiring property tax revenues totaling $ 3,528,250

The property tax rates computed herein are based on preliminary data. If the final state computed revenue limitation permits, the tax rate will be increased by an amount not to exceed 0 If the final computation requires, the tax rate will be lowered.

This budget contains 65 governmental fund types with estimated expenditures of $ 17,183,336 and 4 proprietary funds with estimated expenses of $ 3,635,434

Copies of this budget have been filed for public record and inspection in the offices enumerated in NRS 354.596 (Local Government Budget and Finance Act).

CERTIFICATION

I Amy Elmer
(Printed Name)
Auditor/Recorder
(Title)
certify that all applicable funds and financial operations of this Local Government are listed herein

Signed _____

Dated: _____

APPROVED BY THE GOVERNING BOARD

_____

_____

_____

_____

_____

_____

_____

SCHEDULED PUBLIC HEARING:

Date and Time May 15, 2023 10:00am

Publication Date May 5, 2023

Place: Commissioners Room, County Courthouse, Pioche, Nevada

LINCOLN COUNTY
INDEX
2023-2024 BUDGET

I. INTRODUCTION

Transmittal Letter	1
Index	2-3
Budget Message	4

II. SUMMARY FORMS

Schedule S-1 Budget Summary - All Funds	5-6
Schedule S-2 Statistical Data	7
Schedule S-3 Property Tax Rate and Revenue Reconciliation	8
Schedules A and A-1 - Governmental Fund Types, Expendable Trust Funds and Tax Supported Proprietary Fund Types	9-14
Schedule A-2 Proprietary and Nonexpendable Trust Funds	15

III. GOVERNMENTAL FUND TYPES AND EXPENDABLE TRUST FUNDS

Schedule B General Fund	16-28
Schedule B Flood Control	29
Schedule B Airport	30
Schedule B China Springs	31
Schedule B County Grant	32
Schedule B Federal In Lieu Tax	33-34
Schedule B Road	35-36
Schedule B Agricultural Extension	37
Schedule B Museum	38
Schedule B Transportation	39
Schedule B County Indigent (NRS 428.295)	40
Schedule B Medical County Indigent (NRS 428.285)	41
Schedule B Ambulance	42
Schedule B Fair Board	43
Schedule B Senior Nutrition	44
Schedule B County Library	45
Schedule B Administrative Assessment	46
Schedule B Room Tax	47
Schedule B Rachel Jones Memorial Cemetery	48
Schedule B Legal Aid Services	49
Schedule B Forensic Services	50
Schedule B Alamo Clinic	51
Schedule B Forfeiture	52
Schedule B Lincoln County Stabilization	53
Schedule B Lincoln County Housing Authority	54
Schedule B Resource Development Authority	55
Schedule B Multi Species Habitat Conservation	56
Schedule B Recorder Technology	57
Schedule B Multi Species Habitat Conservation Section 7	58
Schedule B Youth Activities Counsel	59

III. GOVERNMENTAL FUND TYPES AND EXPENDABLE TRUST FUNDS (Continued)

Schedule B Lincoln County Water - General	60
Schedule B Lincoln County Water - Special Use	61
Schedule B Lincoln County Water - Planning and Development	62
Schedule B Lincoln County Water - Special Projects	63
Schedule B Lincoln County Water - Emergency Disaster	64
Schedule B Lincoln County Water - Grant Match	65
Schedule B Lincoln County Land Act - General	66
Schedule B Lincoln County Land Act - Planning and Development	67
Schedule B Lincoln County Land Act - Education	68
Schedule B Lincoln County Land Act - Emergency Disaster	69
Schedule B Lincoln County Land Act - Special Use	70
Schedule B Assessor Technology	71
Schedule B Public Improvement	72
Schedule B Genetic Marker Testing	73
Schedule B Court Facility Fees	74
Schedule B Planning	75
Schedule B District Court Technology	76
Schedule B District Court Specialty Court	77
Schedule B Court Security Fee Fund	78
Schedule B District Court Enrichment	79
Schedule B Property Management Fund	80
Schedule B Special Projects	81
Schedule B Public Administrator	82
Schedule B Demerit Point Reduction	83
Schedule B Capital Improvements	84-85
Schedule B Ambulance Capital Projects	86
Schedule B Vehicle Capital Projects	87
Schedule B Fair Board Capital Projects	88
Schedule B Airport Capital Projects	89
Schedule B Road Equipment Capital Projects	90
Schedule B Lincoln County Water Capital Projects	91
Schedule B Lincoln County Land Act Capital Projects	92
Schedule B State Medical Agency (NRS 428.285)	93
Schedule B Accident Indigent (NRS 428.185)	94
Schedule B County Debt Service	95

IV. PROPRIETARY FUNDS

Schedule F-1 and F-2 Building Department Enterprise	96-97
Schedule F-1 and F-2 Detention Center Enterprise	98-99
Schedule F-1 and F-2 Solid Waste Management Enterprise	100-101
Schedule F-1 and F-2 Landfill Enterprise	102-103

V. SUPPLEMENTARY INFORMATION

Schedule C-1 - Indebtedness	104
Schedule T - Transfer Reconciliation	105-107
Schedules of Existing Contracts and Privatization Contracts	108-111
Final Budget - Proof of Publication [NRS 354.598 (3)]	112

LINCOLN COUNTY
BUDGET MESSAGE FOR THE 2023-2024 BUDGET

The County Commissioners held budget workshops to receive comments from elected officials, department heads, and other interested parties. From the results of those meetings, the final budget has been prepared.

Twelve funds are budgeted to receive property taxes. They are the General, Medical County Indigent, State Medical Agency, China Springs, Capital Improvements, Agricultural Extension, Alamo Clinic, Museum, County Library, Senior Nutrition, Accident Indigent, and County Indigent Funds.

The County Commissioners deemed the following funds necessary to have ending fund balances to meet obligations for the ensuing fiscal year:

Fund	Amount
General	$ 589,150
Flood Control	$ 13,095
Airport	$ 10,546
County Grant	$ 102,030
Federal In Lieu Tax	$ 35,798
Road	$ 17,644
Museum	$ -
Transportation	$ 1,244
County Indigent (NRS 428.295)	$ 31,693
Medical County Indigent (NRS 428.285)	$ 242,035
Fair Board	$ 46,229
Senior Nutrition	$ 40,646
County Library	$ 50,773
Administrative Assessment	$ 10,729
Legal Aid Services	$ 2,057
Forensic Services	$ 6,311
Forfeiture	$ 11,874
Lincoln County Water Special Use	$ 1,169,841
Lincoln County Land Act Special Use	$ 3,074,651
Assessor's Technology	$ 6,459
Court Facility Fees	$ 71,442
District Court Technology	$ 5,104
District Court Enrichment	$ 17,093
Special Capital Projects	$ 191,048
Capital Improvements	$ 826
Vehicle Capital Projects	$ 47,709
Road Equipment Capital Projects	$ 174

Budget Summary for Lincoln County

Schedule S-1

REVENUES	GOVERNMENTAL FUND TYPES AND EXPENDABLE TRUST FUNDS			PROPRIETARY FUNDS	TOTAL (MEMO ONLY)
	ACTUAL PRIOR YEAR 6/30/22 (1)	ESTIMATED CURRENT YEAR 6/30/23 (2)	BUDGET 6/30/2024 (3)	BUDGET YEAR 06/30/24 (4)	COLUMNS 3 +4 (5)
Property Taxes	$ 3,411,845	$ 3,507,490	$ 3,528,250	$ -	$ 3,528,250
Other Taxes	93,231	90,000	90,000	-	90,000
Licenses and Permits	20,268	21,600	21,600	-	21,600
Intergovernmental Resources	7,705,838	5,433,043	5,004,411	170,000	5,174,411
Charges for Services	678,820	811,229	747,983	2,542,700	3,290,683
Fines and Forfeits	275,356	200,000	200,000	-	200,000
Miscellaneous	10,716	722,518	1,063,553	40,000	1,103,553
TOTAL REVENUES	12,196,074	10,785,880	10,655,797	2,752,700	13,408,497
EXPENDITURES-EXPENSES					
General Government	2,612,876	3,157,555	6,362,114	-	6,362,114
Judicial	1,103,314	1,710,864	1,762,827	-	1,762,827
Public Safety	1,915,244	1,868,296	2,123,477	2,645,169	4,768,646
Public Works	2,261,191	3,697,646	3,574,017	110,396	3,684,413
Sanitation	-	-	-	846,369	846,369
Health	161,392	174,160	176,612	-	176,612
Welfare	531,084	561,616	1,296,057	-	1,296,057
Culture and Recreation	1,171,492	417,415	459,513	-	459,513
Community Support	207,383	340,636	457,025	-	457,025
Intergovernmental Expenditures	463,523	236,944	233,735	-	233,735
Contingencies	-	179,846	155,859	-	155,859
Utility Enterprises	-	-	-	-	-
Hospitals	-	-	-	-	-
Capital Projects	272,386	-	493,312	-	493,312
Airports	-	-	-	-	-
Other Enterprises	-	-	-	-	-
Debt Service - Principal	84,140	174,204	224,867	-	224,867
Interest Cost	2,290	16,495	19,780	33,500	53,280
TOTAL EXPENDITURES-EXPENSES	10,786,315	12,535,677	17,339,195	3,635,434	20,974,629
Excess of Revenues over (under) Expenditures-Expenses	1,409,759	(1,749,797)	(6,683,398)	(882,734)	(7,566,132)

Budget Summary for Lincoln County

Schedule S-1

	GOVERNMENTAL FUND TYPES AND EXPENDABLE TRUST FUNDS				
	ACTUAL PRIOR YEAR 06/30/22 (1)	ESTIMATED CURRENT YEAR 06/30/23 (2)	BUDGET YEAR 06/30/24 (3)	PROPRIETARY FUNDS BUDGET YEAR 06/30/24 (4)	TOTAL (MEMO ONLY) COLUMNS 3 + 4 (5)
OTHER FINANCING SOURCES (USES):					
Proceeds of Long-term Debt	142,244	648,733	150,000	-	150,000
Sales of General Fixed Assets	498,289	-	30,000	-	30,000
Disposals of activities	-				
Operating Transfers (in)	714,494	650,243	689,000	705,000	1,394,000
Operating Transfers (out)	(1,958,979)	(1,510,943)	(1,374,000)	(20,000)	(1,394,000)
TOTAL OTHER FINANCING SOURCES (USES)	(603,952)	(211,967)	(505,000)	685,000	180,000
Excess of Revenues and Other Sources over (under) Expenditures and Other Uses (**Net Income**)	805,807	(1,961,764)	(7,188,398)	(197,734)	(7,386,132)
					XXXXXXXXXXXXXXX
				XXXXXXXXXXXXXX	XXXXXXXXXXXXXXX
				XXXXXXXXXXXXXX	XXXXXXXXXXXXXXX
FUND BALANCE JULY 1, BEGINNING OF YEAR:	14,140,556	14,946,363	12,984,599	XXXXXXXXXXXXXX	XXXXXXXXXXXXXXX
				XXXXXXXXXXXXXX	XXXXXXXXXXXXXXX
				XXXXXXXXXXXXXX	XXXXXXXXXXXXXXX
TOTAL BEGINNING FUND BALANCE	14,140,556	14,946,363	12,984,599	XXXXXXXXXXXXXX	XXXXXXXXXXXXXXX
Prior Period Adjustments	-	-	-	XXXXXXXXXXXXXX	XXXXXXXXXXXXXXX
Residual Equity Transfers	-	-	-	XXXXXXXXXXXXXX	XXXXXXXXXXXXXXX
FUND BALANCE JUNE 30, END OF YEAR:	14,946,363	12,984,599	5,796,201	XXXXXXXXXXXXXX	XXXXXXXXXXXXXXX
TOTAL ENDING FUND BALANCE	14,946,363	12,984,599	5,796,201	XXXXXXXXXXXXXX	XXXXXXXXXXXXXXX

FULL TIME EQUIVALENT EMPLOYEES BY FUNCTION

	ACTUAL PRIOR YEAR ENDING 06/30/22	ESTIMATED CURRENT YEAR ENDING 06/30/23	BUDGET YEAR ENDING 06/30/24
General Government	27	27	27
Judicial	8	8	8
Public Safety	34	34	34
Public Works	16	16	16
Sanitation	0	0	0
Health	1	1	1
Welfare	3	3	3
Culture and Recreation	2	2	2
Community Support	2.5	2.5	2.5
TOTAL GENERAL GOVERNMENT	93.5	93.5	93.5
Utilities	0	0	0
Hospitals	0	0	0
Transit Systems	0	0	0
Airports	0	0	0
Other	0	0	0
TOTAL	93.5	93.5	93.5

POPULATION (AS OF JULY 1)	5,293	5,188	4,971
SOURCE OF POPULATION ESTIMATE*	State	State	State
Assessed Valuation (Secured and Unsecured Only)	304,038,163	306,573,341	315,023,149
Net Proceeds of Mines	-	-	-
TOTAL ASSESSED VALUE	304,038,163	306,573,341	315,023,149
TAX RATE			
General Fund	0.9743	1.0636	0.9943
Special Revenue Funds	0.2882	0.1989	0.2682
Capital Projects Funds	0.0500	0.0500	0.0500
Debt Service Funds			
Enterprise Fund			
Other - State Auto/State Medical Indigent	0.025	0.025	0.025
TOTAL TAX RATE	1.3375	1.3375	1.3375

* Use the population certified by the state in March each year. Small districts may use a number developed per the instructions (page 6) or the best information available.

Lincoln County
(Local Government)

SCHEDULE S-2 - STATISTICAL DATA

PROPERTY TAX RATE AND REVENUE RECONCILIATION

Fiscal Year 2023-2024

	(1) ALLOWED TAX RATE	(2) ASSESSED VALUATION	(3) ALLOWED AD VALOREM REVENUE [(1) X (2)/100]	(4) TAX RATE LEVIED	(5) TOTAL PREABATED AD VALOREM REVENUE [(2)X(4)/100]	(6) AD VALOREM TAX ABATEMENT [(5)-(7)]	(7) BUDGETED AD VALOREM REVENUE WITH CAP
OPERATING RATE:							
A. PROPERTY TAX Subject to Revenue Limitations	5.0454	315,023,149	15,894,178	1.1983	3,774,922	614,701	3,160,221
B. PROPERTY TAX Outside Revenue Limitations: Net Proceeds of Mines		-					
VOTER APPROVED: C. Voter Approved Overrides							
LEGISLATIVE OVERRIDES D. Accident Indigent (NRS 428.185)	0.0150	315,023,149	47,253	0.0150	47,253	7,589	39,664
E. Medical Indigent (NRS 428.285)	0.1000	315,023,149	315,023	0.0700	220,516	35,474	185,042
F. Capital Acquisition (NRS 354.59815)	0.0500	315,023,149	157,512	0.0500	157,512	25,295	132,217
G. Youth Services Levy (NRS 62B.150, 62B.160)	0.0073	315,023,149	22,997	0.0042	13,231	2,125	11,106
H. Legislative Overrides							
I. SCCRT Loss NRS 354.59813	0.5287	315,023,149	1,665,527	0.0000	-	-	-
J. Other:							
K. Other:							
L. SUBTOTAL LEGISLATIVE OVERRIDES	0.7010	XXXXXXXXXXXXXXX XXXXXXXXXXXXXXX	2,208,312	0.1392	438,512	70,483	368,029
M. **SUBTOTAL A, C, L**	**5.7464**	XXXXXXXXXXXXXXX XXXXXXXXXXXXXXX	**18,102,490**	**1.3375**	**4,213,435**	**685,185**	**3,528,250**
N. Debt							
O. **TOTAL M AND N**	**5.7464**	XXXXXXXXXXXXXXX XXXXXXXXXXXXXXX	**18,102,490**	**1.3375**	**4,213,435**	**685,185**	**3,528,250**

Lincoln County

(Local Government)

SCHEDULE S-3 - PROPERTY TAX RATE AND REVENUE RECONCILIATION

If an entity chooses to budget for an amount in column 5 which is lower or higher than the amount produced by the formula, please attach an explanation.

SCHEDULE A - ESTIMATED REVENUES & OTHER RESOURCES - GOVERNMENTAL FUND TYPES, EXPENDABLE TRUST FUNDS & TAX SUPPORTED PROPRIETARY FUND TYPES

Budget for Fiscal Year Ending June 30, 2024 Budget Summary for Lincoln County

(Local Government)

GOVERNMENTAL FUNDS AND EXPENDABLE TRUST FUNDS FUND NAME	BEGINNING FUND BALANCES (1)	CONSOLIDATED TAX REVENUE (2)	PROPERTY TAX REQUIRED (3)	TAX RATE (4)	OTHER REVENUE (5)	OTHER FINANCING SOURCES OTHER THAN TRANSFERS IN (6)	OPERATING TRANSFERS IN (7)	TOTAL (8)
General	1,665,947	1,596,502	2,622,385	0.9943	1,065,919	-	-	6,950,753
Flood Control	14,095	-	-		-	-	80,000	94,095
Airport	5,446	-	-		88,000	-	-	93,446
China Springs	8,865	-	11,106	0.0042	-	-	-	19,971
County Grant	102,030	-	-		-	-	-	102,030
Federal In Lieu Tax	1,227,105	-	-		993,000	-	-	2,220,105
Road	725,298	-	-		2,506,576	-	-	3,231,874
Agricultural Extension	16,093	-	26,440	0.0100	5,460	-	-	47,993
Museum	32,807	-	56,226	0.0216	-	-	-	89,033
Transportation	165,156	-	-		117,800	-	-	282,956
County Indigent (NRS 428.295)	164,984	-	94,930	0.0359	-	-	-	259,914
Medical County Indigent (NRS 428.285)	801,831	-	158,599	0.0600	300	-	-	960,730
Ambulance	-	-	-		-	-	-	-
Fair Board	39,319	-	-		91,979	-	10,000	141,298
Senior Nutrition	111,535	-	136,137	0.0515	157,115	-	-	404,787
County Library	52,102	-	111,721	0.0425	-	-	20,000	183,823
Administrative Assessment	86,729	-	-		34,000	-	-	120,729
Subtotal Governmental Fund Types,	5,219,342	1,596,502	3,217,544	1.2200	5,060,149	-	110,000	15,203,537
Expendable Trust Funds		CONTINUED	ON	NEXT	PAGE			
PROPRIETARY FUNDS								
	XXXXXXXXXX				XXXXXXXXXX	XXXXXXXXXXXX	XXXXXXXXXXXXX	XXXXXXXXXX
	XXXXXXXXXX				XXXXXXXXXX	XXXXXXXXXXXX	XXXXXXXXXXXXX	XXXXXXXXXX
	XXXXXXXXXX				XXXXXXXXXX	XXXXXXXXXXXX	XXXXXXXXXXXXX	XXXXXXXXXX
	XXXXXXXXXX				XXXXXXXXXX	XXXXXXXXXXXX	XXXXXXXXXXXXX	XXXXXXXXXX
	XXXXXXXXXX				XXXXXXXXXX	XXXXXXXXXXXX	XXXXXXXXXXXXX	XXXXXXXXXX
SUBTOTAL PROPRIETARY FUNDS	XXXXXXXXXX				XXXXXXXXXX	XXXXXXXXXXXX	XXXXXXXXXXXXX	XXXXXXXXXX
TOTAL ALL FUNDS	XXXXXXXXXX				XXXXXXXXXX	XXXXXXXXXXXX	XXXXXXXXXXXXX	XXXXXXXXXX

SCHEDULE A - ESTIMATED REVENUES & OTHER RESOURCES - GOVERNMENTAL FUND TYPES, EXPENDABLE TRUST FUNDS & TAX SUPPORTED PROPRIETARY FUND TYPES

Budget for Fiscal Year Ending June 30, 2024 Budget Summary for Lincoln County (Local Government)

GOVERNMENTAL FUNDS AND EXPENDABLE TRUST FUNDS FUND NAME	BEGINNING FUND BALANCES (1)	CONSOLIDATED TAX REVENUE (2)	PROPERTY TAX REQUIRED (3)	TAX RATE (4)	OTHER REVENUE (5)	OTHER FINANCING SOURCES OTHER THAN TRANSFERS IN (6)	OPERATING TRANSFERS IN (7)	TOTAL (8)
Room Tax	73,861	-	-		90,000	-	-	163,861
Rachel Jones Memorial Cemetery	827	-	-		-	-	-	827
Legal Aid Services	857	-	-		2,000	-	-	2,857
Forensic Services	5,244	-	-		6,500	-	-	11,744
Alamo Clinic	903	-	112,382	0.0425	-	-	-	113,285
Forfeiture	19,749	-	-		50,000	-	-	69,749
Lincoln County Stabilization	135,438	-	-		250	-	-	135,688
Lincoln County Housing Authority	-	-	-		-	-	-	-
Resource Development Authority	-	-	-		121,313	-	-	121,313
Multi Species Habitat Conservation	-	-	-		18,090	-	-	18,090
Recorder Technology	38,064	-	-		6,000	-	-	44,064
Multi Species Habitat Conservation Section 7	896,117	-	-		5,000	-	-	901,117
Youth Activities Counsel	6,007	-	-		-	-	-	6,007
Lincoln County Water - General	625	-	-		-	-	-	625
Lincoln County Water - Special Use	1,394,394	-	-		500	-	-	1,394,894
Lincoln County Water - Planning and Development	86,090	-	-		50	-	-	86,140
Lincoln County Water - Special Projects	8,674	-	-		-	-	-	8,674
Lincoln County Water - Emergency Disaster	65,619	-	-		100	-	-	65,719
Lincoln County Water - Grant Match	86,125	-	-		150	-	-	86,275
Lincoln County Land Act - General	6,793	-	-		-	-	-	6,793
Lincoln County Land Act - Planning and Development	791	-	-		100	-	-	891
Lincoln County Land Act - Education	128,887	-	-		-	-	-	128,887
Lincoln County Land Act - Emergency Disaster	9,270	-	-		-	-	-	9,270
Subtotal Governmental Fund Types,	2,964,335	-	112,382	0.0425	300,053	-	-	3,376,770
Expendable Trust Funds		CONTINUED	ON	NEXT	PAGE			
PROPRIETARY FUNDS								
	XXXXXXXXXX				XXXXXXXXXX	XXXXXXXXXXX	XXXXXXXXXXXXX	XXXXXXXXXX
SUBTOTAL PROPRIETARY FUNDS	XXXXXXXXXX				XXXXXXXXXX	XXXXXXXXXXX	XXXXXXXXXXXXX	XXXXXXXXXX
TOTAL ALL FUNDS	XXXXXXXXXX				XXXXXXXXXX	XXXXXXXXXXX	XXXXXXXXXXXXX	XXXXXXXXXX

SCHEDULE A - ESTIMATED REVENUES & OTHER RESOURCES - GOVERNMENTAL FUND TYPES, EXPENDABLE TRUST FUNDS & TAX SUPPORTED PROPRIETARY FUND TYPES

Budget for Fiscal Year Ending June 30, 2024 Budget Summary for Lincoln County

(Local Government)

GOVERNMENTAL FUNDS AND EXPENDABLE TRUST FUNDS FUND NAME	BEGINNING FUND BALANCES (1)	CONSOLIDATED TAX REVENUE (2)	PROPERTY TAX REQUIRED (3)	TAX RATE (4)	OTHER REVENUE (5)	OTHER FINANCING SOURCES OTHER THAN TRANSFERS IN (6)	OPERATING TRANSFERS IN (7)	TOTAL (8)
Lincoln County Land Act - Special Use	3,440,161	-	-		36,000	-	-	3,476,161
Assessor's Technology	24,528	-	-		18,000	-	-	42,528
Public Improvement	2,595	-	-		743	-	-	3,338
Genetic Marker Testing	-	-	-		12,000	-	-	12,000
Court Facility Fees	129,442	-	-		45,000	-	-	174,442
Planning Department	38,652	-	-		10,500	-	77,000	126,152
District Court Technology	5,120	-	-		-	-	-	5,120
District Court Specialty Court	45,000	-	-		10,000	-	15,000	70,000
Court Security Fee Fund	14,879	-	-		700	-	-	15,579
District Court Enrichment	13,593	-	-		3,500	-	-	17,093
Property Management Fund	220,135	-	-		17,400	-	50,000	287,535
Special Projects	514,548	-	-		6,500	-	300,000	821,048
Public Administrator	-	-	-		-	-	-	-
Demerit Point Reduction	22,603	-	-		10,000	-	-	32,603
Capital Improvements	1,324	-	132,217	0.0500	-	-	-	133,541
Ambulance Capital Projects	-	-	-		-	-	-	-
Vehicle Capital Projects	72,356	-	-		-	180,000	132,000	384,356
Fair Board Capital Projects	23,579	-	-		500	-	5,000	29,079
Airport Capital Projects	3,042	-	-		-	-	-	3,042
Road Equipment Capital Projects	117,174	-	-		-	-	-	117,174
Lincoln County Water Capital Projects	81,389	-	-		-	-	-	81,389
Lincoln County Land Act Capital Projects	30,802	-	-		-	-	-	30,802
State Medical Agency (NRS 428.285)	-	-	26,443	0.0100	-	-	-	26,443
Accident Indigent (NRS 428.185)	-	-	39,664	0.0150	-	-	-	39,664
DEBT SERVICE								
Subtotal Governmental Fund Types,								
Expendable Trust Funds	12,984,599	1,596,502	3,528,250	1.3375	5,531,045	180,000	689,000	24,509,396
PROPRIETARY FUNDS	XXXXXXXXXX				XXXXXXXXXX	XXXXXXXXXXX	XXXXXXXXXXXXX	XXXXXXXXXX
Subtotal Proprietary Funds	XXXXXXXXXX				XXXXXXXXXX	XXXXXXXXXXX	XXXXXXXXXXXXX	XXXXXXXXXX
TOTAL ALL FUNDS	XXXXXXXXXX	1,596,502	3,528,250	1.3375	XXXXXXXXXX	XXXXXXXXXXX	XXXXXXXXXXXXX	XXXXXXXXXX

SCHEDULE A-1 ESTIMATED EXPENDITURES AND OTHER FINANCING USES

Budget for Fiscal Year Ending June 30, 2024

Budget Summary for Lincoln County
(Local Government)

GOVERNMENTAL FUNDS AND EXPENDABLE TRUST FUNDS FUND NAME	*	SALARIES AND WAGES (1)	EMPLOYEE BENEFITS (2)	SERVICES, SUPPLIES AND OTHER CHARGES ** (3)	CAPITAL OUTLAY *** (4)	CONTINGENCIES AND USES OTHER THAN OPERATING TRANSFERS OUT (5)	OPERATING TRANSFERS OUT (6)	ENDING FUND BALANCES (7)	TOTAL (8)
General		2,227,549	1,392,314	1,610,439	-	155,859	975,442	589,150	6,950,753
Flood Control	R	-	-	1,000	80,000	-	-	13,095	94,095
Airport	R	-	100	82,800	-	-	-	10,546	93,446
China Springs	R	-	-	19,971	-	-	-	-	19,971
County Grant	R	-	-	-	-	-	-	102,030	102,030
Federal In Lieu Tax	R	-	-	1,491,303	436,004	-	257,000	35,798	2,220,105
Road	R	851,139	411,491	1,141,600	810,000	-	-	17,644	3,231,874
Agricultural Extension	R	16,500	1,958	26,535	3,000	-	-	-	47,993
Museum	R	33,676	17,390	12,880	25,087	-	-	-	89,033
Transportation	R	92,200	64,336	125,176	-	-	-	1,244	282,956
County Indigent (NRS 428.295)	R	26,552	21,669	165,000	-	-	15,000	31,693	259,914
Medical County Indigent (NRS 428.285)	R	-	-	718,695	-	-	-	242,035	960,730
Fair Board	R	5,000	850	84,219	-	-	5,000	46,229	141,298
Senior Nutrition	R	122,240	49,187	192,714	-	-	-	40,646	404,787
County Library	R	54,000	26,340	32,710	20,000	-	-	50,773	183,823
Administrative Assessment	R	-	-	40,000	70,000	-	-	10,729	120,729
TOTAL GOVERNMENTAL FUND TYPES AND EXPENDABLE TRUST FUNDS (subtotal page 1)		3,428,856	1,985,635	5,745,042	1,444,091	155,859	1,252,442	1,191,612	15,203,537

*FUND TYPES: R-Special Revenue
C-Capital Projects
D-Debt Service
T-Expendable Trust

** Include Debt Service Requirements in this column

*** Capital Outlay must agree with CIP.

SCHEDULE A-1 ESTIMATED EXPENDITURES AND OTHER FINANCING USES

Budget for Fiscal Year Ending June 30, 2024 Budget Summary for Lincoln County

(Local Government)

GOVERNMENTAL FUNDS AND EXPENDABLE TRUST FUNDS FUND NAME	*	SALARIES AND WAGES (1)	EMPLOYEE BENEFITS (2)	SERVICES, SUPPLIES AND OTHER CHARGES ** (3)	CAPITAL OUTLAY *** (4)	CONTINGENCIES AND USES OTHER THAN OPERATING TRANSFERS OUT (5)	OPERATING TRANSFERS OUT (6)	ENDING FUND BALANCES (7)	TOTAL (8)
Room Tax	R	5,500	1,150	107,211	40,000	-	10,000	-	163,861
Rachel Jones Memorial Cemetery	R	-	-	827	-	-	-	-	827
Legal Aid Services	R	-	-	800	-	-	-	2,057	2,857
Forensic Services	R	-	-	5,433	-	-	-	6,311	11,744
Alamo Clinic	R	-	-	113,285	-	-	-	-	113,285
Forfeiture	R	-	-	57,875	-	-	-	11,874	69,749
Lincoln County Stabilization Fund	R	-	-	135,688	-	-	-	-	135,688
Lincoln County Housing Authority	R	-	-	-	-	-	-	-	-
Resource Development Authority	R	-	-	121,313	-	-	-	-	121,313
Multi Species Habitat Conservation	R	-	-	18,090	-	-	-	-	18,090
Recorder Technology	R	-	-	44,064	-	-	-	-	44,064
MSHC Sec 7	R	-	-	901,117	-	-	-	-	901,117
Youth Activities Counsel	R	-	-	6,007	-	-	-	-	6,007
Lincoln County Water General	R	-	-	625	-	-	-	-	625
Lincoln County Water Special Use	R	-	-	225,053	-	-	-	1,169,841	1,394,894
Lincoln County Water Planning and Dev	R	-	-	86,140	-	-	-	-	86,140
Lincoln County Water Special Projects	R	-	-	8,674	-	-	-	-	8,674
Lincoln County Water Emergency Disaster	R	-	-	65,719	-	-	-	-	65,719
Lincoln County Water Grant Match	R	-	-	86,275	-	-	-	-	86,275
Lincoln County Land Act General	R	-	-	6,793	-	-	-	-	6,793
Lincoln County Land Act Planning	R	-	-	891	-	-	-	-	891
Lincoln County Land Act Education	R	-	-	128,887	-	-	-	-	128,887
Lincoln County Land Act Emergency Disaster	R	-	-	9,270	-	-	-	-	9,270
TOTAL GOVERNMENTAL FUND TYPES AND EXPENDABLE TRUST FUNDS (subtotal page 2)		5,500	1,150	2,130,037	40,000	-	10,000	1,190,083	3,376,770

*FUND TYPES: R-Special Revenue
C-Capital Projects
D-Debt Service
T-Expendable Trust

** Include Debt Service Requirements in this column

*** Capital Outlay must agree with CIP.

SCHEDULE A-1 ESTIMATED EXPENDITURES AND OTHER FINANCING USES

Budget for Fiscal Year Ending June 30, 2024

Budget Summary for Lincoln County
(Local Government)

GOVERNMENTAL FUNDS AND EXPENDABLE TRUST FUNDS FUND NAME	*	SALARIES AND WAGES (1)	EMPLOYEE BENEFITS (2)	SERVICES, SUPPLIES AND OTHER CHARGES ** (3)	CAPITAL OUTLAY *** (4)	CONTINGENCIES AND USES OTHER THAN OPERATING TRANSFERS OUT (5)	OPERATING TRANSFERS OUT (6)	ENDING FUND BALANCES (7)	TOTAL (8)
Lincoln County Land Act Special Use	R	-	-	401,510	-	-	-	3,074,651	3,476,161
Assessor's Technology	R	-	-	36,069	-	-	-	6,459	42,528
Public Improvement	R	-	-	3,338	-	-	-	-	3,338
Genetic Marker Testing	R	-	-	12,000	-	-	-	-	12,000
Court Facility Fees	R	-	-	10,000	93,000	-	-	71,442	174,442
Planning Department	R	74,880	27,025	9,428	14,819	-	-	-	126,152
District Court Technology	R	-	-	16	-	-	-	5,104	5,120
District Court Specialty Court	R	-	-	70,000	-	-	-	-	70,000
Court Security Fee Fund	R	-	-	15,579	-	-	-	-	15,579
District Court Enrichment	R	-	-	-	-	-	-	17,093	17,093
Property Management Fund	R	23,118	7,416	42,604	214,397	-	-	-	287,535
Special Projects	R	-	-	-	630,000	-	-	191,048	821,048
Public Administrator	R	-	-	-	-	-	-	-	-
Demerit Point Reduction	R	-	-	32,603	-	-	-	-	32,603
Capital Improvements	C	-	-	21,157	-	-	111,558	826	133,541
Ambulance Capital Projects	C	-	-	-	-	-	-	-	-
Vehicle Capital Projects	C	-	-	104,647	232,000	-	-	47,709	384,356
Fair Board Capital Projects	C	-	-	-	29,079	-	-	-	29,079
Airport Capital Projects	C	-	-	-	3,042	-	-	-	3,042
Road Equipment Capital Projects	C	-	-	-	117,000	-	-	174	117,174
Lincoln County Water Capital Projects	C	-	-	-	81,389	-	-	-	81,389
Lincoln County Land Capital Projects	C	-	-	-	30,802	-	-	-	30,802
State Medical Agency (NRS 428.285)	T	-	-	26,443	-	-	-	-	26,443
Accident Indigent (NRS 428.185)	T	-	-	39,664	-	-	-	-	39,664
DEBT SERVICE FUND	D	-	-	-	-	-	-	-	-
TOTAL GOVERNMENTAL FUND TYPES AND EXPENDABLE TRUST FUNDS		3,532,354	2,021,226	8,700,137	2,929,619	155,859	1,374,000	5,796,201	24,509,396

*FUND TYPES: R-Special Revenue
C-Capital Projects
D-Debt Service
T-Expendable Trust

** Include Debt Service Requirements in this column

*** Capital Outlay must agree with CIP.

SCHEDULE A-2 PROPRIETARY AND NONEXPENDABLE TRUST FUNDS

Budget for Fiscal Year Ending June 30, 2024

Budget Summary for Lincoln County
(Local Government)

FUND NAME	*	OPERATING REVENUES (1)	OPERATING EXPENSES (2) **	NONOPERATING REVENUES (3)	NONOPERATING EXPENSES (4)	OPERATING TRANSFERS IN (5)	OPERATING TRANSFERS OUT (6)	NET INCOME (7)
Building Department	E	20,000	110,396	-	-	-	-	(90,396)
Detention Center	E	1,872,700	2,645,169	-	-	685,000	-	(87,469)
Solid Waste	E	650,000	846,369	210,000	33,500	-	20,000	(39,869)
Landfill	E	-	-	-	-	20,000	-	20,000
TOTAL		2,542,700	3,601,934	210,000	33,500	705,000	20,000	(197,734)

*FUND TYPES:

E - Enterprise
I - Internal Service
N - Nonexpendable Trust

** Include Depreciation

REVENUES	(1) ACTUAL PRIOR YEAR ENDING 6/30/2022	(2) ESTIMATED CURRENT YEAR ENDING 6/30/2023	(3) BUDGET YEAR ENDING 06/30/24 TENTATIVE APPROVED	(4) FINAL APPROVED
Taxes				
Property Taxes	2,489,077	2,790,654	2,569,520	2,622,385
Licenses and Permits				
Business Licenses	12,330	12,000	12,000	12,000
Liquor Licenses	5,075	5,100	5,100	5,100
Gaming Licenses	2,317	4,000	4,000	4,000
Marriage Licenses	546	500	500	500
Subtotal	20,268	21,600	21,600	21,600
Intergovernmental				
Gaming Tax	121,311	130,000	130,000	130,000
Virgin Valley Water District	29,545	7,000	7,000	7,000
Southern Nevada Water	4,829	-	-	-
Consolidated Tax Distribution	1,511,388	1,586,522	1,596,502	1,596,502
Emergency Management Grant	57,097	23,330	23,330	23,330
ARP Grants	-	400,000	400,000	-
Lincoln County Water District Contract	-	18,000	18,000	24,000
TV District	-	-	-	2,000
HCP	-	-	-	250
Lincoln County Fire District	-	-	-	22,000
Cannabis Money	88,235	88,235	88,235	88,235
Fish and Wildlife	2,567	2,500	2,500	2,500
Subtotal	1,814,972	2,255,587	2,265,567	1,895,817

REVENUES	(1) ACTUAL PRIOR YEAR ENDING 6/30/2022	(2) ESTIMATED CURRENT YEAR ENDING 6/30/2023	(3) BUDGET YEAR ENDING 06/30/24 TENTATIVE APPROVED	(4) FINAL APPROVED
Charges for Services				
Clerk Fees	13,192	9,000	9,000	9,000
Clerk Election Reimbursement	-	8,000	8,000	8,000
Recorder Fees	54,582	50,000	50,000	50,000
Assessor Commissions	40,786	40,000	40,000	40,000
Sheriff Fees	13,061	9,000	9,000	9,000
Administrative Services	16,078	-	-	-
Tax Penalties and Costs	60,373	50,000	50,000	50,000
D.A. Fees	1,632	6,000	6,000	6,000
Civil Fees	2,711	3,000	3,000	3,000
Foreclosure mediation	200	-	-	-
Air Force Security	61,000	122,000	122,000	132,000
Caliente Police Contract	175,000	175,000	110,000	100,000
Caliente Court Contract	3,500	3,850	3,850	3,850
Alamo Maintainence Staff Allocation	-	31,154	31,154	31,154
Spay & Neuter License Plate Fee	-	1,000	1,000	1,000
Contract Public Safety Overtime	-	55,000	55,000	15,000
Subtotal	442,115	563,004	498,004	458,004
Fines and Forfeitures	275,356	200,000	300,000	200,000
Miscellaneous				
Investment income	(63,865)	50,000	50,000	50,000
Rent, sales, refunds	87,725	30,000	30,000	30,000
Sale of county property	73,342	-	-	-
Excess Proceeds	-	40,000	40,000	-
Other	9,186	7,000	7,000	7,000
Subtotal	106,388	127,000	127,000	87,000

REVENUES	(1) ACTUAL PRIOR YEAR ENDING 6/30/2022	(2) ESTIMATED CURRENT YEAR ENDING 6/30/2023	(3) BUDGET YEAR ENDING 06/30/24 TENTATIVE APPROVED	(4) FINAL APPROVED
SUBTOTAL REVENUE ALL SOURCES	5,148,176	5,957,845	5,781,691	5,284,806
OTHER FINANCING SOURCES:				
Operating Transfers In (Schedule T)				
Disposal of assets	10,365	-	-	-
SUBTOTAL OTHER FINANCING SOURCES	10,365	-	-	-
BEGINNING FUND BALANCE	1,868,240	1,877,527	1,178,297	1,665,947
Prior Period Adjustments				
Residual Equity Transfers				
TOTAL BEGINNING FUND BALANCE	1,868,240	1,877,527	1,178,297	1,665,947
TOTAL AVAILABLE RESOURCES	7,026,781	7,835,372	6,959,988	6,950,753

EXPENDITURES BY FUNCTION AND ACTIVITY	(1) ACTUAL PRIOR YEAR ENDING 6/30/2022	(2) ESTIMATED CURRENT YEAR ENDING 6/30/2023	(3) BUDGET YEAR TENTATIVE APPROVED	(4) ENDING 06/30/24 FINAL APPROVED
General Government				
Executive Activity				
County Commissioners				
Salaries and Wages	103,126	115,850	114,998	114,998
Employee Benefits	67,576	87,503	93,646	94,126
Services and Supplies	21,844	22,600	54,600	54,600
Subtotal	192,546	225,953	263,244	263,724
Executive Officer				
Salaries and Wages	47,059	49,736	51,972	51,972
Employee Benefits	26,280	28,545	31,742	31,862
Services and Supplies	1,081	2,250	3,950	3,950
Subtotal	74,420	80,531	87,664	87,784
Clerk				
Salaries and Wages	113,333	130,260	131,986	131,986
Employee Benefits	53,512	57,775	70,862	71,102
Services and Supplies	35,567	111,100	107,150	107,150
Subtotal	202,412	299,135	309,998	310,238
Business Licenses				
Salaries and Wages	6,081	7,230	7,626	8,128
Employee Benefits	2,180	2,853	3,150	3,325
Services and Supplies	1,238	1,500	1,500	1,500
Subtotal	9,499	11,583	12,276	12,953
FUNCTION SUBTOTAL (page 1 of 5)	478,877	617,202	673,182	674,699

EXPENDITURES BY FUNCTION AND ACTIVITY	(1) ACTUAL PRIOR YEAR ENDING 6/30/2022	(2) ESTIMATED CURRENT YEAR ENDING 6/30/2023	(3) BUDGET YEAR ENDING 06/30/24 TENTATIVE APPROVED	(4) FINAL APPROVED
Miscellaneous Overhead				
Salaries and Wages	-	-	-	-
Employee Benefits (Retiree Insurance)	26,281	42,000	42,000	42,000
Services and Supplies	106,643	201,756	929,406	201,756
Subtotal	132,924	243,756	971,406	243,756
Total Executive Activity	611,801	860,958	1,644,588	918,455

EXPENDITURES BY FUNCTION AND ACTIVITY	(1) ACTUAL PRIOR YEAR ENDING 6/30/2022	(2) ESTIMATED CURRENT YEAR ENDING 6/30/2023	(3) BUDGET YEAR TENTATIVE APPROVED	(4) ENDING 06/30/24 FINAL APPROVED
Finance Activity				
Treasurer				
Salaries and Wages	124,737	126,138	113,428	117,075
Employee Benefits	55,143	59,543	61,428	63,063
Services and Supplies	8,283	19,200	25,500	25,500
Subtotal	188,163	204,881	200,356	205,638
Auditor and Recorder				
Salaries and Wages	139,330	144,601	171,042	178,848
Employee Benefits	57,119	60,518	79,945	81,784
Services and Supplies	8,319	23,500	23,500	23,500
Subtotal	204,768	228,619	274,487	284,132
Total Finance Activity	392,931	433,500	474,843	489,770
FUNCTION SUBTOTAL (page 3 of 5)	392,931	433,500	474,843	489,770

EXPENDITURES BY FUNCTION AND ACTIVITY	(1) ACTUAL PRIOR YEAR ENDING 6/30/2022	(2) ESTIMATED CURRENT YEAR ENDING 6/30/2023	(3) BUDGET YEAR TENTATIVE APPROVED	(4) ENDING 06/30/24 FINAL APPROVED
Other Activity				
Assessor				
Salaries and Wages	146,843	164,882	133,615	137,066
Employee Benefits	59,455	75,000	75,123	76,137
Services and Supplies	18,475	22,200	31,000	31,000
Subtotal	224,773	262,082	239,738	244,203

EXPENDITURES BY FUNCTION AND ACTIVITY	(1) ACTUAL PRIOR YEAR ENDING 6/30/2022	(2) ESTIMATED CURRENT YEAR ENDING 6/30/2023	(3) BUDGET YEAR ENDING 06/30/24 TENTATIVE APPROVED	(4) FINAL APPROVED
Buildings and Grounds				
Pioche				
Salaries and Wages	26,817	28,057	28,984	28,984
Employee Benefits	6,155	7,846	8,583	8,863
Services and Supplies	138,088	170,330	171,370	171,370
Capital outlay	-	-	-	-
Subtotal	171,060	206,233	208,937	209,217
Alamo				
Salaries and Wages	21,569	32,229	10,743	10,743
Employee Benefits	14,737	22,767	7,600	7,720
Services and Supplies	11,097	21,129	21,700	21,700
Subtotal	47,403	76,125	40,043	40,163
Total Other Activity	443,236	544,440	488,718	493,583
Total General Government	1,447,968	1,838,898	2,608,149	1,901,808
FUNCTION SUBTOTAL (page 5 of 5)	1,447,968	1,838,898	2,608,149	1,901,808

EXPENDITURES BY FUNCTION AND ACTIVITY	(1) ACTUAL PRIOR YEAR ENDING 6/30/2022	(2) ESTIMATED CURRENT YEAR ENDING 6/30/2023	(3) BUDGET YEAR TENTATIVE APPROVED	(4) ENDING 06/30/24 FINAL APPROVED
Judicial				
District Court				
Salaries and Wages	82,112	120,000	-	-
Employee Benefits	-	-	-	-
Services and Supplies	65,737	214,006	170,056	170,056
Subtotal	147,849	334,006	170,056	170,056
District Attorney				
Salaries and Wages	195,066	274,542	164,320	168,740
Employee Benefits	79,227	133,116	87,103	87,463
Services and Supplies	20,520	20,000	166,500	166,500
Subtotal	294,813	427,658	417,923	422,703
Indigent Assistance				
Services and Supplies	116,651	175,000	193,000	235,000
Public Administrator				
Services and Supplies	122	2,000	2,000	2,000
Public Guardian				
Services and Supplies	-	2,000	2,000	2,000
Law Library				
Services and Supplies	6,762	8,000	8,000	8,000
Public Defender				
Service and Supplies	-	-	175,000	-
FUNCTION SUBTOTAL (page 1 of 2)	566,197	948,664	967,979	839,759

EXPENDITURES BY FUNCTION AND ACTIVITY	(1) ACTUAL PRIOR YEAR ENDING 6/30/2022	(2) ESTIMATED CURRENT YEAR ENDING 6/30/2023	(3) BUDGET YEAR TENTATIVE APPROVED	(4) ENDING 06/30/24 FINAL APPROVED
Juvenile Officer				
Salaries and Wages	35,999	53,410	53,410	63,410
Employee Benefits	20,879	26,501	26,501	31,621
Services and Supplies	14,847	30,921	30,921	30,921
Subtotal	71,725	110,832	110,832	125,952
Justice Court				
Alamo				
Salaries and Wages	127,155	127,088	127,088	134,603
Employee Benefits	59,668	62,516	62,516	64,300
Services and Supplies	8,723	21,894	21,890	21,890
Subtotal	195,546	211,498	211,494	220,793
Meadow Valley				
Salaries and Wages	120,141	134,232	137,391	140,983
Employee Benefits	58,097	61,308	75,669	76,710
Services and Supplies	12,417	17,270	26,632	26,632
Subtotal	190,655	212,810	239,692	244,325
Total Judicial	1,024,123	1,483,804	1,529,997	1,430,829
FUNCTION SUBTOTAL (page 2 of 2)	1,024,123	1,483,804	1,529,997	1,430,829

EXPENDITURES BY FUNCTION AND ACTIVITY	(1) ACTUAL PRIOR YEAR ENDING 6/30/2022	(2) ESTIMATED CURRENT YEAR ENDING 6/30/2023	(3) BUDGET YEAR TENTATIVE APPROVED	(4) ENDING 06/30/24 FINAL APPROVED
Public Safety				
Sheriff				
Salaries and Wages	734,161	789,310	774,285	778,901
Employee Benefits	439,352	545,155	568,527	570,602
Services and Supplies	185,838	220,681	230,320	230,320
Capital Outlay	54,992	-	-	-
Subtotal	1,414,343	1,555,146	1,573,132	1,579,823
Caliente Contract				
Salaries and Wages	114,233	108,267	108,267	108,267
Employee Benefits	61,851	74,020	81,456	81,576
Services and Supplies	770	4,600	4,600	4,600
Subtotal	176,854	186,887	194,323	194,443
Emergency Management				
Salaries and Wages	15,721	21,364	30,845	30,845
Employee Benefits	10,066	8,630	-	60
Services and Supplies	1,116	-	29,994	29,994
Subtotal	26,903	29,994	60,839	60,899
Total Public Safety	1,618,100	1,772,027	1,828,294	1,835,165
FUNCTION SUBTOTAL	1,618,100	1,772,027	1,828,294	1,835,165

EXPENDITURES BY FUNCTION AND ACTIVITY	(1) ACTUAL PRIOR YEAR ENDING 6/30/2022	(2) ESTIMATED CURRENT YEAR ENDING 6/30/2023	(3) BUDGET YEAR TENTATIVE APPROVED	(4) ENDING 06/30/24 FINAL APPROVED
Health				
Public Nurse				
Salaries and Wages	-	22,000	22,000	22,000
Employee Benefits	-	-	-	-
Services and Supplies	53,720	39,500	39,500	39,500
Subtotal	53,720	61,500	61,500	61,500
Animal Control				
Services and Supplies	-	1,000	1,000	1,000
Total Health	53,720	62,500	62,500	62,500
FUNCTION SUBTOTAL	53,720	62,500	62,500	62,500

		(1)	(2)	(3) BUDGET YEAR	(4) ENDING 06/30/24
	EXPENDITURES BY FUNCTION AND ACTIVITY	ACTUAL PRIOR YEAR ENDING 6/30/2022	ESTIMATED CURRENT YEAR ENDING 6/30/2023	TENTATIVE APPROVED	FINAL APPROVED
PAGE	FUNCTION SUMMARY				
19-23	General Government	1,447,968	1,838,898	2,608,149	1,901,808
24-25	Judicial	1,024,123	1,483,804	1,529,997	1,430,829
26	Public Safety	1,618,100	1,772,027	1,828,294	1,835,165
27	Health	53,720	62,500	62,500	62,500
TOTAL EXPENDITURES - ALL FUNCTIONS		4,143,911	5,157,229	6,028,940	5,230,302
OTHER USES:					
CONTINGENCY (Not to exceed 3% of Total Expenditures all Functions)		-	179,846	180,868	155,859
Operating Transfers Out (Schedule T)					
	Detention Center	753,760	572,350	-	685,000
	China Springs	10,000	10,000	-	-
	Road	2,500	-	-	-
	Library	-	-	20,000	20,000
	Special Projects	239,083	250,000	250,000	250,000
	Vehicle Capital Projects	-	-	100,000	20,442
	Subtotal	1,005,343	832,350	370,000	975,442
TOTAL EXPENDITURES AND OTHER USES		5,149,254	6,169,425	6,579,808	6,361,603
ENDING FUND BALANCE:		1,877,527	1,665,947	380,180	589,150
TOTAL GENERAL FUND COMMITMENTS AND FUND BALANCE		7,026,781	7,835,372	6,959,988	6,950,753

REVENUES	(1) ACTUAL PRIOR YEAR ENDING 6/30/2022	(2) ESTIMATED CURRENT YEAR ENDING 6/30/2023	(3) BUDGET YEAR TENTATIVE APPROVED	(4) ENDING 06/30/24 FINAL APPROVED
Intergovernmental				
Grant	-	-	-	-
Subtotal	-	-	-	-
OTHER FINANCING SOURCES:				
Operating Transfers In (Schedule T)				
Federal in Lieu Tax	-	61,500	80,000	80,000
BEGINNING FUND BALANCE	38,110	37,205	14,095	14,095
Prior Period Adjustment(s)				
Residual Equity Transfers				
TOTAL BEGINNING FUND BALANCE	38,110	37,205	14,095	14,095
TOTAL RESOURCES	38,110	98,705	94,095	94,095
EXPENDITURES				
Public Works				
Services and Supplies	905	1,000	1,000	1,000
Capital Outlay	-	83,610	80,000	80,000
Subtotal	905	84,610	81,000	81,000
OTHER USES:				
CONTINGENCY (not to exceed 3% of total expenditures)				
Operating Transfers Out (Schedule T)				
ENDING FUND BALANCE:	37,205	14,095	13,095	13,095
TOTAL COMMITMENTS & FUND BALANCE	38,110	98,705	94,095	94,095

REVENUES	(1) ACTUAL PRIOR YEAR ENDING 6/30/2022	(2) ESTIMATED CURRENT YEAR ENDING 6/30/2023	(3) BUDGET YEAR TENTATIVE APPROVED	(4) ENDING 06/30/24 FINAL APPROVED
Charges for services				
Airport fees	1,298	9,000	9,000	9,000
Miscellaneous				
Grants	-	28,000	28,000	28,000
Rent - BLM	14,212	10,800	11,000	11,000
Other - Fuel Sales	47,149	40,000	40,000	40,000
Subtotal	61,361	78,800	79,000	79,000
Subtotal	62,659	87,800	88,000	88,000
OTHER FINANCING SOURCES:				
Operating Transfers In (Schedule T)				
BEGINNING FUND BALANCE	46,930	50,546	5,446	5,446
Prior Period Adjustment(s)				
Residual Equity Transfers				
TOTAL BEGINNING FUND BALANCE	46,930	50,546	5,446	5,446
TOTAL RESOURCES	109,589	138,346	93,446	93,446
EXPENDITURES				
Public Works				
Employee Benefits	96	100	100	100
Services and Supplies	58,947	82,800	82,800	82,800
Capital Outlay	-	50,000	-	-
Subtotal	59,043	132,900	82,900	82,900
OTHER USES				
CONTINGENCY (not to exceed 3% of Total Expenditures)				
Operating Transfers Out (Schedule T)				
ENDING FUND BALANCE:	50,546	5,446	10,546	10,546
TOTAL COMMITMENTS & FUND BALANCE	109,589	138,346	93,446	93,446

REVENUES	(1) ACTUAL PRIOR YEAR ENDING 6/30/2022	(2) ESTIMATED CURRENT YEAR ENDING 6/30/2023	(3) BUDGET YEAR TENTATIVE APPROVED	(4) ENDING 06/30/24 FINAL APPROVED
Taxes				
Property Taxes	10,721	11,024	11,106	11,106
Intergovernmental				
Fish and Wildlife	9	-	-	-
Subtotal	10,730	11,024	11,106	11,106
OTHER FINANCING SOURCES:				
Operating Transfers In (Schedule T)				
General Fund	10,000	10,000	-	-
BEGINNING FUND BALANCE	6,895	11,671	8,865	8,865
Prior Period Adjustment(s)				
Residual Equity Transfers				
TOTAL BEGINNING FUND BALANCE	6,895	11,671	8,865	8,865
TOTAL RESOURCES	27,625	32,695	19,971	19,971
EXPENDITURES				
Intergovernmental				
Services and Supplies	15,954	23,830	19,971	19,971
Subtotal	15,954	23,830	19,971	19,971
OTHER USES:				
CONTINGENCY (not to exceed 3% of total expenditures)				
Operating Transfers Out (Schedule T)				
ENDING FUND BALANCE:	11,671	8,865	-	-
TOTAL COMMITMENTS & FUND BALANCE	27,625	32,695	19,971	19,971

REVENUES	(1) ACTUAL PRIOR YEAR ENDING 6/30/2022	(2) ESTIMATED CURRENT YEAR ENDING 6/30/2023	(3) BUDGET YEAR ENDING 06/30/24 TENTATIVE APPROVED	(4) FINAL APPROVED
Intergovernmental				
Grant	2,375,897	-	-	-
Regional Transportation Commission	317,026	-	-	-
Subtotal	2,692,923	-	-	-
Miscellaneous				
Investment income	(15,534)	-	-	-
Subtotal	2,677,389	-	-	-
OTHER FINANCING SOURCES:				
Operating Transfers In (Schedule T)				
Federal In Lieu Tax	25,435	-	-	-
BEGINNING FUND BALANCE	(46,654)	102,030	102,030	102,030
TOTAL BEGINNING FUND BALANCE	(46,654)	102,030	102,030	102,030
TOTAL RESOURCES	2,656,170	102,030	102,030	102,030
EXPENDITURES				
General Government				
Salaries and Wages	212,922	-	-	-
Employee Benefits	66,719	-	-	-
Services and Supplies	116,750	-	-	-
Capital Outlay	67,680	-	-	-
Subtotal	464,071	-	-	-
Public Safety				
Salaries and Wages	31,443	-	-	-
Employee Benefits	18,213	-	-	-
Services and Supplies	172,414	-	-	-
Subtotal	222,070	-	-	-
Public Works				
Services and Supplies	232,467	-	-	-
Capital Outlay	229,161	-	-	-
Subtotal	461,628	-	-	-
Welfare				
Salaries and Wages	29,907	-	-	-
Employee Benefits	21,732	-	-	-
Services and Supplies	32,841	-	-	-
Subtotal	84,480	-	-	-
Culture and Recreation				
Salaries and Wages	8,422	-	-	-
Employee Benefits	930	-	-	-
Services and Supplies	86,345	-	-	-
Capital Outlay	814,298	-	-	-
Subtotal	909,995	-	-	-
Subtotal	2,142,244	-	-	-
OTHER USES				
CONTINGENCY (not to exceed 3% of total expenditures)				
Operating Transfers Out (Schedule T)				
Transportation	20,171	-	-	
Detention Center	391,725	-	-	-
Subtotal Transfers Out	411,896	-	-	-
ENDING FUND BALANCE:	102,030	102,030	102,030	102,030
TOTAL COMMITMENTS & FUND BALANCE	2,656,170	102,030	102,030	102,030

REVENUES	(1) ACTUAL PRIOR YEAR ENDING 6/30/2022	(2) ESTIMATED CURRENT YEAR ENDING 6/30/2023	(3) BUDGET YEAR TENTATIVE APPROVED	(4) ENDING 06/30/24 FINAL APPROVED
Intergovernmental				
Federal in Lieu Tax	988,493	980,000	988,000	988,000
Grants	34,160	-	-	-
Subtotal	1,022,653	980,000	988,000	988,000
Miscellaneous				
Investment income	(46,496)	5,000	5,000	5,000
Subtotal	976,157	985,000	993,000	993,000
OTHER FINANCING SOURCES:				
Operating Transfers In (Schedule T)				
BEGINNING FUND BALANCE	1,797,823	1,811,081	1,169,105	1,227,105
Prior Period Adjustment(s)				
Residual Equity Transfers				
TOTAL BEGINNING FUND BALANCE	1,797,823	1,811,081	1,169,105	1,227,105
TOTAL AVAILABLE RESOURCES	2,773,980	2,796,081	2,162,105	2,220,105

EXPENDITURES BY FUNCTION AND ACTIVITY	(1) ACTUAL PRIOR YEAR ENDING 6/30/2022	(2) ESTIMATED CURRENT YEAR ENDING 6/30/2023	(3) BUDGET YEAR TENTATIVE APPROVED	(4) ENDING 06/30/24 FINAL APPROVED
General Government				
Services and Supplies	437,414	930,943	965,303	1,371,303
Capital Outlay	87,216	22,298	211,000	211,000
Subtotal - General Government	524,630	953,241	1,176,303	1,582,303
Public Safety				
Capital Outlay	57,443	19,474	183,004	225,004
Intergovernmental				
Services and Supplies - State	85,826	120,000	120,000	120,000
TOTAL EXPENDITURES - ALL FUNCTIONS	667,899	1,092,715	1,479,307	1,927,307
OTHER USES:				
CONTINGENCY (Not to exceed 3% of				
Operating Transfers Out (Schedule T)				
Flood Control	-	61,500	80,000	80,000
Planning	75,000	76,411	77,000	77,000
County Grant	25,435	-	-	-
Transportation	8,186	-	-	-
Building Department	50,000	50,000	-	-
Senior Nutrition	37,379	-	-	-
Detention Center	49,000	238,350	-	-
Special Projects	-	-	50,000	50,000
Property Management	50,000	50,000	50,000	50,000
Subtotal	295,000	476,261	257,000	257,000
TOTAL EXPENDITURES AND OTHER USES	962,899	1,568,976	1,736,307	2,184,307
ENDING FUND BALANCE:	1,811,081	1,227,105	425,798	35,798
TOTAL COMMITMENTS & FUND BALANCE	2,773,980	2,796,081	2,162,105	2,220,105

REVENUES	(1) ACTUAL PRIOR YEAR ENDING 6/30/2022	(2) ESTIMATED CURRENT YEAR ENDING 6/30/2023	(3) BUDGET YEAR TENTATIVE APPROVED	(4) ENDING 06/30/24 FINAL APPROVED
Intergovernmental				
Optional $0.01 Tax	25,979	30,409	25,430	25,430
Gas Tax $1.25	588,428	623,978	584,931	584,931
Gas Tax $2.35	1,020,036	1,086,744	1,012,775	1,012,775
Gas Tax $1.75	53,237	62,807	53,940	53,940
LC Regional Transportation Commission	-	-	51,900	-
National Forest	14,653	12,000	12,000	12,000
Subtotal	1,702,333	1,815,938	1,740,976	1,689,076
Miscellaneous				
Investment income	(11,253)	15,000	15,000	15,000
Equipment Sales	-	172,500	172,500	172,500
Caliente Shop Sale	-	-	350,000	350,000
Land Sale	-	-	30,000	30,000
Fuel Sales	-	250,000	250,000	250,000
Subtotal	(11,253)	437,500	817,500	817,500
Subtotal	1,691,080	2,253,438	2,558,476	2,506,576
OTHER FINANCING SOURCES (specify)				
Operating Transfers In (Schedule T)				
General Fund	2,500	-	-	-
Disposal of Capital Assets	323,124	-	-	-
Finance Purchases	-	648,733	-	-
Subtotal	325,624	648,733	-	-
BEGINNING FUND BALANCE	925,829	1,193,863	1,072,198	725,298
Prior Period Adjustments				
Residual Equity Transfers				
TOTAL BEGINNING FUND BALANCE	925,829	1,193,863	1,072,198	725,298
TOTAL AVAILABLE RESOURCES	2,942,533	4,096,034	3,630,674	3,231,874

EXPENDITURES	(1) ACTUAL PRIOR YEAR ENDING 6/30/2022	(2) ESTIMATED CURRENT YEAR ENDING 6/30/2023	(3) BUDGET YEAR TENTATIVE APPROVED	(4) ENDING 06/30/24 FINAL APPROVED
Public Works				
Highways and Streets				
Salaries and Wages	703,171	765,673	773,763	851,139
Employee Benefits	307,698	339,730	384,761	411,491
Services and Supplies	637,801	1,151,600	1,001,600	1,001,600
Capital Outlay	-	973,733	1,273,193	810,000
Subtotal	1,648,670	3,230,736	3,433,317	3,074,230
Debt service:				
Principal	-	130,000	130,000	130,000
Interest	-	10,000	10,000	10,000
Subtotal	-	140,000	140,000	140,000
Subtotal	1,648,670	3,370,736	3,573,317	3,214,230
OTHER USES				
CONTINGENCY (not to exceed 3% of Total Expenditures)				
Operating Transfers Out (Schedule T)				
Road Capital Projects	100,000	-	-	-
Subtotal	100,000	-	-	-
ENDING FUND BALANCE	1,193,863	725,298	57,357	17,644
TOTAL COMMITMENTS & FUND BALANCE	2,942,533	4,096,034	3,630,674	3,231,874

REVENUES	(1) ACTUAL PRIOR YEAR ENDING 6/30/2022	(2) ESTIMATED CURRENT YEAR ENDING 6/30/2023	(3) BUDGET YEAR TENTATIVE APPROVED	(4) ENDING 06/30/24 FINAL APPROVED
Taxes				
Property Taxes	25,527	26,245	26,440	26,440
Intergovernmental				
Fish and Wildlife	21	-	-	-
Miscellaneous				
Other	-	5,460	5,460	5,460
Subtotal	25,548	31,705	31,900	31,900
OTHER FINANCING SOURCES:				
Operating Transfers In (Schedule T)				
BEGINNING FUND BALANCE	24,918	28,072	16,093	16,093
Prior Period Adjustment(s)				
Residual Equity Transfers				
TOTAL BEGINNING FUND BALANCE	24,918	28,072	16,093	16,093
TOTAL RESOURCES	50,466	59,777	47,993	47,993
EXPENDITURES				
Community Support				
Salaries and Wages	13,162	19,188	16,500	16,500
Employee Benefits	1,744	1,826	1,958	1,958
Services and Supplies	7,488	20,170	26,535	26,535
Capital Outlay	-	2,500	3,000	3,000
Subtotal	22,394	43,684	47,993	47,993
OTHER USES:				
CONTINGENCY (not to exceed 3% of Total Expenditures)				
Operating Transfers Out (Schedule T)				
ENDING FUND BALANCE:	28,072	16,093	-	-
TOTAL COMMITMENTS & FUND BALANCE	50,466	59,777	47,993	47,993

REVENUES	(1) ACTUAL PRIOR YEAR ENDING 6/30/2022	(2) ESTIMATED CURRENT YEAR ENDING 6/30/2023	(3) BUDGET YEAR ENDING 06/30/24 TENTATIVE APPROVED	(4) FINAL APPROVED
Taxes				
Property Taxes	52,871	45,253	56,226	56,226
Intergovernmental				
Fish and Wildlife	10	-	-	-
Miscellaneous				
Donations	5,089	-	-	-
Subtotal	57,970	45,253	56,226	56,226
OTHER FINANCING SOURCES:				
Operating Transfers In (Schedule T)				
BEGINNING FUND BALANCE	58,901	53,321	32,807	32,807
Prior Period Adjustment(s)				
Residual Equity Transfers				
TOTAL BEGINNING FUND BALANCE	58,901	53,321	32,807	32,807
TOTAL RESOURCES	116,871	98,574	89,033	89,033
EXPENDITURES				
Culture and Recreation				
Museum				
Salaries and Wages	27,708	33,781	33,676	33,676
Employee Benefits	14,741	16,486	17,270	17,390
Services and Supplies	5,906	13,000	13,000	12,880
Capital Outlay	15,195	2,500	25,087	25,087
Subtotal	63,550	65,767	89,033	89,033
OTHER USES:				
CONTINGENCY (not to exceed 3% of Total Expenditures)				
ENDING FUND BALANCE:	53,321	32,807	-	-
TOTAL COMMITMENTS & FUND BALANCE	116,871	98,574	89,033	89,033

REVENUES	(1) ACTUAL PRIOR YEAR ENDING 6/30/2022	(2) ESTIMATED CURRENT YEAR ENDING 6/30/2023	(3) BUDGET YEAR TENTATIVE APPROVED	(4) ENDING 06/30/24 FINAL APPROVED
Intergovernmental				
Grants	108,837	70,000	70,000	70,000
Regional Transportation	-	28,000	42,000	28,000
Regional Transportation Van	-	14,000	-	14,000
Subtotal	108,837	112,000	112,000	112,000
Charges for Services				
Reimbursement	1,782	-	-	-
Bus Fares	4,594	5,800	5,800	5,800
Subtotal	6,376	5,800	5,800	5,800
Subtotal	115,213	117,800	117,800	117,800
OTHER FINANCING SOURCES:				
Operating Transfers In (Schedule T)				
FILT	8,186	-	-	-
County Grants	20,171	-	-	-
Subtotal	28,357	-	-	-
BEGINNING FUND BALANCE	202,579	222,995	165,156	165,156
Prior Period Adjustment(s)				
Residual Equity Transfers				
TOTAL BEGINNING FUND BALANCE	202,579	222,995	165,156	165,156
TOTAL RESOURCES	346,149	340,795	282,956	282,956
EXPENDITURES				
Community Support				
Salaries and Wages	57,811	65,889	92,200	92,200
Employee Benefits	30,373	40,574	64,036	64,336
Services and Supplies	34,970	69,176	125,176	125,176
Capital Outlay	-	-	-	-
Subtotal	123,154	175,639	281,412	281,712
OTHER USES:				
CONTINGENCY (not to exceed 3% or Total Expenditures)				
Operating Transfers Out (Schedule T)				
ENDING FUND BALANCE:	222,995	165,156	1,544	1,244
TOTAL COMMITMENTS & FUND BALANCE	346,149	340,795	282,956	282,956

REVENUES	(1) ACTUAL PRIOR YEAR ENDING 6/30/2022	(2) ESTIMATED CURRENT YEAR ENDING 6/30/2023	(3) BUDGET YEAR TENTATIVE APPROVED	(4) ENDING 06/30/24 FINAL APPROVED
Taxes				
Property Taxes	91,734	94,223	94,930	94,930
Intergovernmental				
Fish and Wildlife	77	-	-	-
Miscellaneous				
Other	1,213	-	-	-
Subtotal	93,024	94,223	94,930	94,930
OTHER FINANCING SOURCES:				
Operating Transfers In (Schedule T)				
BEGINNING FUND BALANCE	335,529	304,084	164,984	164,984
Prior Period Adjustment(s)				
Residual Equity Transfers				
TOTAL BEGINNING FUND BALANCE	335,529	304,084	164,984	164,984
TOTAL RESOURCES	428,553	398,307	259,914	259,914
EXPENDITURES				
Welfare				
Indigent				
Salaries and Wages	54,315	59,234	26,552	26,552
Employee Benefits	26,219	28,858	21,529	21,669
Services and Supplies	9,027	60,231	140,000	140,000
Subtotal	89,561	148,323	188,081	188,221
Indigent - Jail				
Services and Supplies	4,908	25,000	25,000	25,000
Subtotal	94,469	173,323	213,081	213,221
OTHER USES:				
CONTINGENCY (not to exceed 3% or Total Expenditures)				
Operating Transfers Out (Schedule T)				
District Court Specialty Court	30,000	60,000	15,000	15,000
ENDING FUND BALANCE:	304,084	164,984	31,833	31,693
TOTAL COMMITMENTS & FUND BALANCE	428,553	398,307	259,914	259,914

REVENUES	(1) ACTUAL PRIOR YEAR ENDING 6/30/2022	(2) ESTIMATED CURRENT YEAR ENDING 6/30/2023	(3) BUDGET YEAR TENTATIVE APPROVED	(4) ENDING 06/30/24 FINAL APPROVED
Taxes				
Property Taxes	204,208	131,591	211,464	158,599
Intergovernmental				
Indigent Assistance	124,724	-	-	-
Fish and Wildlife	171	-	-	-
Subtotal	124,895	-	-	-
Miscellaneous				
Investment income	(10,909)	300	300	300
Subtotal	318,194	131,891	211,764	158,899
OTHER FINANCING SOURCES:				
Operating Transfers In (Schedule T)				
BEGINNING FUND BALANCE	514,731	791,350	801,831	801,831
Prior Period Adjustment(s)				
Residual Equity Transfers				
TOTAL BEGINNING FUND BALANCE	514,731	791,350	801,831	801,831
TOTAL RESOURCES	832,925	923,241	1,013,595	960,730
EXPENDITURES				
Welfare				
Services and Supplies	41,575	121,410	718,695	718,695
Subtotal	41,575	121,410	718,695	718,695
OTHER USES:				
CONTINGENCY (not to exceed 3% of Total Expenditures)				
Operating Transfers Out (Schedule T)				
ENDING FUND BALANCE:	791,350	801,831	294,900	242,035
TOTAL COMMITMENTS & FUND BALANCE	832,925	923,241	1,013,595	960,730

REVENUES	(1) ACTUAL PRIOR YEAR ENDING 6/30/2022	(2) ESTIMATED CURRENT YEAR ENDING 6/30/2023	(3) BUDGET YEAR TENTATIVE APPROVED	(4) ENDING 06/30/24 FINAL APPROVED
Charges for Services				
Ambulance Fees	-	-	-	-
Miscellaneous				
Investment income	-	-	-	-
Donation	-	-	-	-
Subtotal	-	-	-	-
Intergovernmental				
Grant	-	-	-	-
Mutual aid agreement	-	-	-	-
Subtotal	-	-	-	-
Subtotal	-	-	-	-
OTHER FINANCING SOURCES:				
Operating Transfers In (Schedule T)				
BEGINNING FUND BALANCE	-	-	-	-
Prior Period Adjustment(s)				
Residual Equity Transfers				
TOTAL BEGINNING FUND BALANCE	-	-	-	-
TOTAL RESOURCES	-	-	-	-
EXPENDITURES				
Health				
Salaries and Wages - Meadow Valley	-	-	-	-
Salaries and Wages-Rachel	-			
Employee Benefits	-	-	-	-
Services and Supplies	-	-	-	-
Capital Outlay	-	-	-	-
Subtotal	-	-	-	-
Intergovernmental:				
Transfer fund to Lincoln Co Fire District	-	-	-	-
OTHER USES:				
CONTINGENCY (not to exceed 3% of Total Expenditures)				
Special items: Disposal	-	-	-	-
Operating Transfers Out (Schedule T)				
Ambulance Capital Projects	-	-	-	-
ENDING FUND BALANCE:	-	-	-	-
TOTAL COMMITMENTS & FUND BALANCE	-	-	-	-

REVENUES	(1) ACTUAL PRIOR YEAR ENDING 6/30/2022	(2) ESTIMATED CURRENT YEAR ENDING 6/30/2023	(3) BUDGET YEAR TENTATIVE APPROVED	(4) ENDING 06/30/24 FINAL APPROVED
Charges for Services				
Other				
Publications and Entry Fees	48,171	50,225	91,979	91,979
Miscellaneous				
Investment income	(676)	-	-	-
Donations	200	-	-	-
Subtotal	(476)	-	-	-
Subtotal	47,695	50,225	91,979	91,979
OTHER FINANCING SOURCES:				
Operating Transfers In (Schedule T)				
Room Tax	10,000	10,000	10,000	10,000
BEGINNING FUND BALANCE	42,870	52,030	39,319	39,319
Prior Period Adjustment(s)				
Residual Equity Transfers				
TOTAL BEGINNING FUND BALANCE	42,870	52,030	39,319	39,319
TOTAL RESOURCES	100,565	112,255	141,298	141,298
EXPENDITURES				
Culture and Recreation				
Parks				
Salaries	5,040	5,000	5,000	5,000
Benefits	841	850	850	850
Services and Supplies	37,654	62,086	84,219	84,219
Subtotal	43,535	67,936	90,069	90,069
OTHER USES:				
CONTINGENCY (not to exceed 3% of Total Expenditures)				
Operating Transfers Out (Schedule T)				
Fairboard Capital Projects	5,000	5,000	5,000	5,000
ENDING FUND BALANCE:	52,030	39,319	46,229	46,229
TOTAL COMMITMENTS & FUND BALANCE	100,565	112,255	141,298	141,298

REVENUES	(1) ACTUAL PRIOR YEAR ENDING 6/30/2022	(2) ESTIMATED CURRENT YEAR ENDING 6/30/2023	(3) BUDGET YEAR TENTATIVE APPROVED	(4) ENDING 06/30/24 FINAL APPROVED
Taxes				
Property Taxes	131,421	10,000	136,137	136,137
Intergovernmental				
Grants	156,393	130,000	130,000	130,000
Fish and Wildlife	110	115	115	115
Subtotal	156,503	130,115	130,115	130,115
Charges for Services				
Meals	23,140	25,000	25,000	25,000
Miscellaneous				
Other	2,257	2,000	2,000	2,000
Donation	1,200	-	-	-
Subtotal	3,457	2,000	2,000	2,000
Subtotal	314,521	167,115	293,252	293,252
OTHER FINANCING SOURCES:				
Operating Transfers In (Schedule T)				
Federal in Lieu	37,379	-	-	-
BEGINNING FUND BALANCE	199,871	236,303	111,535	111,535
Prior Period Adjustment(s)				
Residual Equity Transfers				
TOTAL BEGINNING FUND BALANCE	199,871	236,303	111,535	111,535
TOTAL RESOURCES	551,771	403,418	404,787	404,787
EXPENDITURES				
Welfare				
Salaries and Wages	96,056	104,383	122,240	122,240
Employee Benefits	39,773	50,100	48,827	49,187
Services and Supplies	179,639	137,400	192,714	192,714
Subtotal	315,468	291,883	363,781	364,141
OTHER USES:				
CONTINGENCY (not to exceed 3% of Total Expenditures)				
Operating Transfers Out (Schedule T)				
ENDING FUND BALANCE:	236,303	111,535	41,006	40,646
TOTAL COMMITMENTS & FUND BALANCE	551,771	403,418	404,787	404,787

REVENUES	(1) ACTUAL PRIOR YEAR ENDING 6/30/2022	(2) ESTIMATED CURRENT YEAR ENDING 6/30/2023	(3) BUDGET YEAR TENTATIVE APPROVED	(4) ENDING 06/30/24 FINAL APPROVED
Taxes				
Property Taxes	106,374	90,106	111,721	111,721
Intergovernmental				
Fish and Wildlife	61	-	-	-
Miscellaneous				
Donations	1,529	-	-	-
Other	4,121	-	-	-
Subtotal	5,650	-	-	-
Subtotal	112,085	90,106	111,721	111,721
OTHER FINANCING SOURCES:				
Operating Transfers In (Schedule T)				
General Fund	-	-	20,000	20,000
BEGINNING FUND BALANCE	57,905	72,780	52,102	52,102
Prior Period Adjustment(s)				
Residual Equity Transfers				
TOTAL BEGINNING FUND BALANCE	57,905	72,780	52,102	52,102
TOTAL RESOURCES	169,990	162,886	183,823	183,823
EXPENDITURES				
Culture and Recreation				
Libraries				
Salaries and Wages	50,582	54,000	54,000	54,000
Employee Benefits	23,051	24,681	26,220	26,340
Services and Supplies	23,577	32,103	32,710	32,710
Capital Outlay	-	-	20,000	20,000
Subtotal	97,210	110,784	132,930	133,050
OTHER USES:				
CONTINGENCY (not to exceed 3% of Total Expenditures)				
Operating Transfers Out (Schedule T)				
ENDING FUND BALANCE:	72,780	52,102	50,893	50,773
TOTAL COMMITMENTS & FUND BALANCE	169,990	162,886	183,823	183,823

REVENUES	(1) ACTUAL PRIOR YEAR ENDING 6/30/2022	(2) ESTIMATED CURRENT YEAR ENDING 6/30/2023	(3) BUDGET YEAR TENTATIVE APPROVED	(4) ENDING 06/30/24 FINAL APPROVED
Charges for Services				
Administrative Assessments	35,155	34,000	34,000	34,000
Miscellaneous				
Investment income	(2,051)	-	-	-
Subtotal	33,104	34,000	34,000	34,000
OTHER FINANCING SOURCES:				
Operating Transfers In (Schedule T)				
BEGINNING FUND BALANCE	125,410	145,178	78,022	86,729
Prior Period Adjustment(s)				
Residual Equity Transfers				
TOTAL BEGINNING FUND BALANCE	125,410	145,178	78,022	86,729
TOTAL RESOURCES	158,514	179,178	112,022	120,729
EXPENDITURES				
Judicial				
Services and Supplies	13,336	92,449	40,000	40,000
Capital Outlay	-	-	70,000	70,000
Subtotal	13,336	92,449	110,000	110,000
OTHER USES:				
CONTINGENCY (not to exceed 3% of Total Expenditures)				
Operating Transfers Out (Schedule T)				
ENDING FUND BALANCE	145,178	86,729	2,022	10,729
TOTAL COMMITMENTS & FUND BALANCE	158,514	179,178	112,022	120,729

REVENUES	(1) ACTUAL PRIOR YEAR ENDING 6/30/2022	(2) ESTIMATED CURRENT YEAR ENDING 6/30/2023	(3) BUDGET YEAR TENTATIVE APPROVED	(4) ENDING 06/30/24 FINAL APPROVED
Taxes				
Room Tax	93,231	90,000	90,000	90,000
Subtotal	93,231	90,000	90,000	90,000
OTHER FINANCING SOURCES:				
Operating Transfers In (Schedule T)				
BEGINNING FUND BALANCE	152,558	173,289	73,861	73,861
Prior Period Adjustment(s)				
Residual Equity Transfers				
TOTAL BEGINNING FUND BALANCE	152,558	173,289	73,861	73,861
TOTAL RESOURCES	245,789	263,289	163,861	163,861
EXPENDITURES				
Culture and Recreation				
Salaries and Wages	5,040	5,500	5,500	5,500
Employee Benefits	747	850	1,150	1,150
Services and Supplies	51,415	130,210	100,711	100,711
Capital Outlay	-	36,368	40,000	40,000
Subtotal	57,202	172,928	147,361	147,361
Intergovernmental				
Services and Supplies	5,298	6,500	6,500	6,500
Subtotal	62,500	179,428	153,861	153,861
OTHER USES:				
CONTINGENCY (not to exceed 3% of Total Expenditures)				
Operating Transfers Out (Schedule T)				
Fair Board	10,000	10,000	10,000	10,000
ENDING FUND BALANCE:	173,289	73,861	-	-
TOTAL COMMITMENTS & FUND BALANCE	245,789	263,289	163,861	163,861

REVENUES	(1) ACTUAL PRIOR YEAR ENDING 6/30/2022	(2) ESTIMATED CURRENT YEAR ENDING 6/30/2023	(3) BUDGET YEAR TENTATIVE APPROVED	(4) ENDING 06/30/24 FINAL APPROVED
Miscellaneous	-	-	-	-
Subtotal	-	-	-	-
OTHER FINANCING SOURCES:				
Operating Transfers In (Schedule T)				
BEGINNING FUND BALANCE	827	827	-	827
Prior Period Adjustment(s)				
Residual Equity Transfers				
TOTAL BEGINNING FUND BALANCE	827	827	-	827
TOTAL RESOURCES	827	827	-	827
EXPENDITURES				
Health				
Services and Supplies	-	-	-	827
Subtotal	-	-	-	827
OTHER USES:				
CONTINGENCY (not to exceed 3% of Total Expenditures)				
Operating Transfers Out (Schedule T)				
ENDING FUND BALANCE:	827	827	-	-
TOTAL COMMITMENTS & FUND BALANCE	827	827	-	827

REVENUES	(1) ACTUAL PRIOR YEAR ENDING 6/30/2022	(2) ESTIMATED CURRENT YEAR ENDING 6/30/2023	(3) BUDGET YEAR TENTATIVE APPROVED	(4) ENDING 06/30/24 FINAL APPROVED
Charges for Services				
Other	1,396	2,000	2,000	2,000
Subtotal	1,396	2,000	2,000	2,000
OTHER FINANCING SOURCES:				
Operating Transfers In (Schedule T)				
BEGINNING FUND BALANCE	(1,739)	(343)	857	857
Prior Period Adjustment(s)				
Residual Equity Transfers				
TOTAL BEGINNING FUND BALANCE	(1,739)	(343)	857	857
TOTAL RESOURCES	(343)	1,657	2,857	2,857
EXPENDITURES				
Judicial				
Services and Supplies	-	800	800	800
Subtotal	-	800	800	800
OTHER USES:				
CONTINGENCY (not to exceed 3% of Total Expenditures)				
Operating Transfers Out (Schedule T)				
ENDING FUND BALANCE:	(343)	857	2,057	2,057
TOTAL COMMITMENTS & FUND BALANCE	(343)	1,657	2,857	2,857

REVENUES	(1) ACTUAL PRIOR YEAR ENDING 6/30/2022	(2) ESTIMATED CURRENT YEAR ENDING 6/30/2023	(3) BUDGET YEAR TENTATIVE APPROVED	(4) ENDING 06/30/24 FINAL APPROVED
Charges for Services				
Other	1,361	6,500	6,500	6,500
Subtotal	1,361	6,500	6,500	6,500
OTHER FINANCING SOURCES:				
Operating Transfers In (Schedule T)				
BEGINNING FUND BALANCE	4,407	5,244	5,244	5,244
Prior Period Adjustment(s)				
Residual Equity Transfers				
TOTAL BEGINNING FUND BALANCE	4,407	5,244	5,244	5,244
TOTAL RESOURCES	5,768	11,744	11,744	11,744
EXPENDITURES				
Public Safety				
Services and Supplies	524	6,500	5,433	5,433
Subtotal	524	6,500	5,433	5,433
OTHER USES:				
CONTINGENCY (not to exceed 3% of Total Expenditures)				
Operating Transfers Out (Schedule T)				
ENDING FUND BALANCE:	5,244	5,244	6,311	6,311
TOTAL COMMITMENTS & FUND BALANCE	5,768	11,744	11,744	11,744

REVENUES	(1) ACTUAL PRIOR YEAR ENDING 6/30/2022	(2) ESTIMATED CURRENT YEAR ENDING 6/30/2023	(3) BUDGET YEAR TENTATIVE APPROVED	(4) ENDING 06/30/24 FINAL APPROVED
Taxes				
Property Tax	108,484	111,546	112,382	112,382
Intergovernmental				
Fish and Wildlife	91	-	-	-
Subtotal	108,575	111,546	112,382	112,382
OTHER FINANCING SOURCES:				
Operating Transfers In (Schedule T)				
BEGINNING FUND BALANCE	114	1,017	903	903
Prior Period Adjustment(s)				
Residual Equity Transfers				
TOTAL BEGINNING FUND BALANCE	114	1,017	903	903
TOTAL RESOURCES	108,689	112,563	113,285	113,285
EXPENDITURES				
Health				
Services and Supplies	107,672	111,660	113,285	113,285
Subtotal	107,672	111,660	113,285	113,285
OTHER USES:				
CONTINGENCY (not to exceed 3% of Total Expenditures)				
Operating Transfers Out (Schedule T)				
ENDING FUND BALANCE:	1,017	903	-	-
TOTAL COMMITMENTS & FUND BALANCE	108,689	112,563	113,285	113,285

REVENUES	(1) ACTUAL PRIOR YEAR ENDING 6/30/2022	(2) ESTIMATED CURRENT YEAR ENDING 6/30/2023	(3) BUDGET YEAR TENTATIVE APPROVED	(4) ENDING 06/30/24 FINAL APPROVED
Intergovernmental				
Grants	18,000	-	50,000	50,000
Miscellaneous				
Investment income	(1,052)	-	-	-
Subtotal	16,948	-	50,000	50,000
OTHER FINANCING SOURCES:				
Operating Transfers In (Schedule T)				
BEGINNING FUND BALANCE	60,295	65,044	19,749	19,749
Prior Period Adjustment(s)				
Residual Equity Transfers				
TOTAL BEGINNING FUND BALANCE	60,295	65,044	19,749	19,749
TOTAL RESOURCES	77,243	65,044	69,749	69,749
EXPENDITURES				
Public Safety				
Services and Supplies	12,199	45,295	57,875	57,875
Subtotal	12,199	45,295	57,875	57,875
OTHER USES:				
CONTINGENCY (not to exceed 3% of Total Expenditures)				
Operating Transfers Out (Schedule T)				
ENDING FUND BALANCE:	65,044	19,749	11,874	11,874
TOTAL COMMITMENTS & FUND BALANCE	77,243	65,044	69,749	69,749

REVENUES	(1) ACTUAL PRIOR YEAR ENDING 6/30/2022	(2) ESTIMATED CURRENT YEAR ENDING 6/30/2023	(3) BUDGET YEAR TENTATIVE APPROVED	(4) ENDING 06/30/24 FINAL APPROVED
Miscellaneous				
Investment income	(2,111)	250	250	250
Subtotal	(2,111)	250	250	250
OTHER FINANCING SOURCES:				
Operating Transfers In (Schedule T)				
BEGINNING FUND BALANCE	137,299	135,188	135,438	135,438
Prior Period Adjustment(s)				
Residual Equity Transfers				
TOTAL BEGINNING FUND BALANCE	137,299	135,188	135,438	135,438
TOTAL RESOURCES	135,188	135,438	135,688	135,688
EXPENDITURES				
General Government				
Services and Supplies	-	-	135,688	135,688
Subtotal	-	-	135,688	135,688
OTHER USES:				
CONTINGENCY (not to exceed 3% of Total Expenditures)				
Operating Transfers Out (Schedule T)				
ENDING FUND BALANCE:	135,188	135,438	-	-
TOTAL COMMITMENTS & FUND BALANCE	135,188	135,438	135,688	135,688

REVENUES	(1) ACTUAL PRIOR YEAR ENDING 6/30/2022	(2) ESTIMATED CURRENT YEAR ENDING 6/30/2023	(3) BUDGET YEAR TENTATIVE APPROVED	(4) ENDING 06/30/24 FINAL APPROVED
Miscellaneous				
Rent	-	-	-	-
Investment income	-	-	-	-
Insurance Proceeds	-	-	-	-
Subtotal	-	-	-	-
OTHER FINANCING SOURCES:				
Operating Transfers In (Schedule T)				
BEGINNING FUND BALANCE	272,380	-	-	-
Prior Period Adjustment(s)				
Residual Equity Transfers				
TOTAL BEGINNING FUND BALANCE	272,380	-	-	-
TOTAL RESOURCES	272,380	-	-	-
EXPENDITURES				
Community Support				
Services and Supplies	-	-	-	-
Intergovernmental				
Transfer/Close fund to Pioche Town	272,380	-	-	-
Subtotal	272,380	-	-	-
OTHER USES:				
CONTINGENCY (not to exceed 3% of Total Expenditures)				
Operating Transfers Out (Schedule T)				
ENDING FUND BALANCE:	-	-	-	-
TOTAL COMMITMENTS & FUND BALANCE	272,380	-	-	-

REVENUES	(1) ACTUAL PRIOR YEAR ENDING 6/30/2022	(2) ESTIMATED CURRENT YEAR ENDING 6/30/2023	(3) BUDGET YEAR TENTATIVE APPROVED	(4) ENDING 06/30/24 FINAL APPROVED
Intergovernmental				
Grants	60,835	121,313	121,313	121,313
Miscellaneous				
Donations	1,000	-	-	-
Subtotal	61,835	121,313	121,313	121,313
OTHER FINANCING SOURCES:				
Operating Transfers In (Schedule T)				
BEGINNING FUND BALANCE	-	-	-	-
Prior Period Adjustment(s)				
Residual Equity Transfers				
TOTAL BEGINNING FUND BALANCE	-	-	-	-
TOTAL RESOURCES	61,835	121,313	121,313	121,313
EXPENDITURES				
Community Support				
Services and Supplies	61,835	121,313	121,313	121,313
Subtotal	61,835	121,313	121,313	121,313
OTHER USES:				
CONTINGENCY (not to exceed 3% of Total Expenditures)				
Operating Transfers Out (Schedule T)				
ENDING FUND BALANCE:	-	-	-	-
TOTAL COMMITMENTS & FUND BALANCE	61,835	121,313	121,313	121,313

REVENUES	(1) ACTUAL PRIOR YEAR ENDING 6/30/2022	(2) ESTIMATED CURRENT YEAR ENDING 6/30/2023	(3) BUDGET YEAR TENTATIVE APPROVED	(4) ENDING 06/30/24 FINAL APPROVED
Intergovernmental				
Grants	3,511	18,090	18,090	18,090
Miscellaneous				
Investment Income	(126)	-	-	-
Subtotal	3,385	18,090	18,090	18,090
OTHER FINANCING SOURCES:				
BEGINNING FUND BALANCE	-	-	-	-
Prior Period Adjustment(s)				
Residual Equity Transfers				
TOTAL BEGINNING FUND BALANCE	-	-	-	-
TOTAL RESOURCES	3,385	18,090	18,090	18,090
EXPENDITURES				
General Government				
Services and Supplies	3,385	18,090	18,090	18,090
Subtotal	3,385	18,090	18,090	18,090
OTHER USES:				
CONTINGENCY (not to exceed 3% of Total Expenditures)				
Operating Transfers Out (Schedule T)				
ENDING FUND BALANCE:	-	-	-	-
TOTAL COMMITMENTS & FUND BALANCE	3,385	18,090	18,090	18,090

REVENUES	(1) ACTUAL PRIOR YEAR ENDING 6/30/2022	(2) ESTIMATED CURRENT YEAR ENDING 6/30/2023	(3) BUDGET YEAR TENTATIVE APPROVED	(4) ENDING 06/30/24 FINAL APPROVED
Charges for Services				
User fees	8,545	6,000	6,000	6,000
Miscellaneous				
Investment income	(568)	-	-	-
Subtotal	7,977	6,000	6,000	6,000
OTHER FINANCING SOURCES:				
Operating Transfers In (Schedule T)				
BEGINNING FUND BALANCE	32,729	32,064	38,064	38,064
Prior Period Adjustment(s)				
Residual Equity Transfers				
TOTAL BEGINNING FUND BALANCE	32,729	32,064	38,064	38,064
TOTAL RESOURCES	40,706	38,064	44,064	44,064
EXPENDITURES				
General Government				
Services and Supplies	-	-	44,064	44,064
Capital Outlay	8,642	-	-	-
Subtotal	8,642	-	44,064	44,064
OTHER USES:				
CONTINGENCY (not to exceed 3% of Total Expenditures)				
Operating Transfers Out (Schedule T)				
ENDING FUND BALANCE:	32,064	38,064	-	-
TOTAL COMMITMENTS & FUND BALANCE	40,706	38,064	44,064	44,064

REVENUES	(1) ACTUAL PRIOR YEAR ENDING 6/30/2022	(2) ESTIMATED CURRENT YEAR ENDING 6/30/2023	(3) BUDGET YEAR TENTATIVE APPROVED	(4) ENDING 06/30/24 FINAL APPROVED
Miscellaneous				
Investment income	(13,913)	5,000	5,000	5,000
Subtotal	(13,913)	5,000	5,000	5,000
OTHER FINANCING SOURCES:				
Operating Transfers In (Schedule T)				
BEGINNING FUND BALANCE	905,030	891,117	896,117	896,117
Prior Period Adjustment(s)				
Residual Equity Transfers				
TOTAL BEGINNING FUND BALANCE	905,030	891,117	896,117	896,117
TOTAL RESOURCES	891,117	896,117	901,117	901,117
EXPENDITURES				
General Government				
Services and Supplies	-	-	901,117	901,117
Subtotal	-	-	901,117	901,117
OTHER USES:				
CONTINGENCY (not to exceed 3% of Total Expenditures)				
Operating Transfers Out (Schedule T)				
ENDING FUND BALANCE:	891,117	896,117	-	-
TOTAL COMMITMENTS & FUND BALANCE	891,117	896,117	901,117	901,117

REVENUES	(1) ACTUAL PRIOR YEAR ENDING 6/30/2022	(2) ESTIMATED CURRENT YEAR ENDING 6/30/2023	(3) BUDGET YEAR TENTATIVE APPROVED	(4) ENDING 06/30/24 FINAL APPROVED
Charges for Services				
User fees	-	-	-	-
Subtotal	-	-	-	-
OTHER FINANCING SOURCES:				
Operating Transfers In (Schedule T)				
BEGINNING FUND BALANCE	6,007	6,007	6,007	6,007
Prior Period Adjustment(s)				
Residual Equity Transfers				
TOTAL BEGINNING FUND BALANCE	6,007	6,007	6,007	6,007
TOTAL RESOURCES	6,007	6,007	6,007	6,007
EXPENDITURES				
Community Support				
Services and Supplies	-	-	6,007	6,007
Subtotal	-	-	6,007	6,007
OTHER USES:				
CONTINGENCY (not to exceed 3% of Total Expenditures)				
Operating Transfers Out (Schedule T)				
ENDING FUND BALANCE:	6,007	6,007	-	-
TOTAL COMMITMENTS & FUND BALANCE	6,007	6,007	6,007	6,007

REVENUES	(1) ACTUAL PRIOR YEAR ENDING 6/30/2022	(2) ESTIMATED CURRENT YEAR ENDING 6/30/2023	(3) BUDGET YEAR TENTATIVE APPROVED	(4) ENDING 06/30/24 FINAL APPROVED
Miscellaneous				
Investment income	(10)	-	-	-
Subtotal	(10)	-	-	-
OTHER FINANCING SOURCES:				
Operating Transfers In (Schedule T)				
BEGINNING FUND BALANCE	635	625	625	625
Prior Period Adjustment(s)				
Residual Equity Transfers				
TOTAL BEGINNING FUND BALANCE	635	625	625	625
TOTAL RESOURCES	625	625	625	625
EXPENDITURES				
General Government				
Services and Supplies	-	-	625	625
Subtotal	-	-	625	625
OTHER USES:				
CONTINGENCY (not to exceed 3% of Total Expenditures)				
Operating Transfers Out (Schedule T)				
ENDING FUND BALANCE:	625	625	-	-
TOTAL COMMITMENTS & FUND BALANCE	625	625	625	625

REVENUES	(1) ACTUAL PRIOR YEAR ENDING 6/30/2022	(2) ESTIMATED CURRENT YEAR ENDING 6/30/2023	(3) BUDGET YEAR TENTATIVE APPROVED	(4) ENDING 06/30/24 FINAL APPROVED
Miscellaneous				
Investment income	(19,687)	500	500	500
Subtotal	(19,687)	500	500	500
OTHER FINANCING SOURCES:				
Operating Transfers In (Schedule T)				
BEGINNING FUND BALANCE	1,413,581	1,393,894	1,164,131	1,394,394
Prior Period Adjustment(s)				
Residual Equity Transfers				
TOTAL BEGINNING FUND BALANCE	1,413,581	1,393,894	1,164,131	1,394,394
TOTAL RESOURCES	1,393,894	1,394,394	1,164,631	1,394,894
EXPENDITURES				
General Government				
Services and Supplies	-	-	210,576	225,053
Subtotal	-	-	210,576	225,053
OTHER USES:				
CONTINGENCY (not to exceed 3% of Total Expenditures)				
Operating Transfers Out (Schedule T)				
ENDING FUND BALANCE:	1,393,894	1,394,394	954,055	1,169,841
TOTAL COMMITMENTS & FUND BALANCE	1,393,894	1,394,394	1,164,631	1,394,894

REVENUES	(1) ACTUAL PRIOR YEAR ENDING 6/30/2022	(2) ESTIMATED CURRENT YEAR ENDING 6/30/2023	(3) BUDGET YEAR TENTATIVE APPROVED	(4) ENDING 06/30/24 FINAL APPROVED
Miscellaneous				
Investment income	(1,343)	50	50	50
Subtotal	(1,343)	50	50	50
OTHER FINANCING SOURCES:				
Operating Transfers In (Schedule T)				
BEGINNING FUND BALANCE	87,383	86,040	86,090	86,090
Prior Period Adjustment(s)				
Residual Equity Transfers				
TOTAL BEGINNING FUND BALANCE	87,383	86,040	86,090	86,090
TOTAL RESOURCES	86,040	86,090	86,140	86,140
EXPENDITURES				
General Government				
Services and Supplies	-	-	86,140	86,140
Subtotal	-	-	86,140	86,140
OTHER USES:				
CONTINGENCY (not to exceed 3% of Total Expenditures)				
Operating Transfers Out (Schedule T)				
ENDING FUND BALANCE:	86,040	86,090	-	-
TOTAL COMMITMENTS & FUND BALANCE	86,040	86,090	86,140	86,140

REVENUES	(1) ACTUAL PRIOR YEAR ENDING 6/30/2022	(2) ESTIMATED CURRENT YEAR ENDING 6/30/2023	(3) BUDGET YEAR TENTATIVE APPROVED	(4) ENDING 06/30/24 FINAL APPROVED
Miscellaneous				
Investment income	(135)	-	-	-
Subtotal	(135)	-	-	-
OTHER FINANCING SOURCES:				
Operating Transfers In (Schedule T)				
BEGINNING FUND BALANCE	8,809	8,674	8,674	8,674
Prior Period Adjustment(s)				
Residual Equity Transfers				
TOTAL BEGINNING FUND BALANCE	8,809	8,674	8,674	8,674
TOTAL RESOURCES	8,674	8,674	8,674	8,674
EXPENDITURES				
General Government				
Services and Supplies	-	-	8,674	8,674
Subtotal	-	-	8,674	8,674
OTHER USES:				
CONTINGENCY (not to exceed 3% of Total Expenditures)				
Operating Transfers Out (Schedule T)				
ENDING FUND BALANCE:	8,674	8,674	-	-
TOTAL COMMITMENTS & FUND BALANCE	8,674	8,674	8,674	8,674

REVENUES	(1) ACTUAL PRIOR YEAR ENDING 6/30/2022	(2) ESTIMATED CURRENT YEAR ENDING 6/30/2023	(3) BUDGET YEAR TENTATIVE APPROVED	(4) ENDING 06/30/24 FINAL APPROVED
Miscellaneous				
Investment income	(1,023)	100	100	100
Subtotal	(1,023)	100	100	100
OTHER FINANCING SOURCES:				
Operating Transfers In (Schedule T)				
BEGINNING FUND BALANCE	66,542	65,519	65,619	65,619
Prior Period Adjustment(s)				
Residual Equity Transfers				
TOTAL BEGINNING FUND BALANCE	66,542	65,519	65,619	65,619
TOTAL RESOURCES	65,519	65,619	65,719	65,719
EXPENDITURES				
General Government				
Services and Supplies	-	-	65,719	65,719
Subtotal	-	-	65,719	65,719
OTHER USES:				
CONTINGENCY (not to exceed 3% of Total Expenditures)				
Operating Transfers Out (Schedule T)				
ENDING FUND BALANCE:	65,519	65,619	-	-
TOTAL COMMITMENTS & FUND BALANCE	65,519	65,619	65,719	65,719

REVENUES	(1) ACTUAL PRIOR YEAR ENDING 6/30/2022	(2) ESTIMATED CURRENT YEAR ENDING 6/30/2023	(3) BUDGET YEAR TENTATIVE APPROVED	(4) ENDING 06/30/24 FINAL APPROVED
Miscellaneous				
Investment income	(1,342)	150	150	150
Subtotal	(1,342)	150	150	150
OTHER FINANCING SOURCES:				
Operating Transfers In (Schedule T)				
BEGINNING FUND BALANCE	87,317	85,975	86,125	86,125
Prior Period Adjustment(s)				
Residual Equity Transfers				
TOTAL BEGINNING FUND BALANCE	87,317	85,975	86,125	86,125
TOTAL RESOURCES	85,975	86,125	86,275	86,275
EXPENDITURES				
General Government				
Services and Supplies	-	-	86,275	86,275
Subtotal	-	-	86,275	86,275
OTHER USES:				
CONTINGENCY (not to exceed 3% of Total Expenditures)				
Operating Transfers Out (Schedule T)				
ENDING FUND BALANCE:	85,975	86,125	-	-
TOTAL COMMITMENTS & FUND BALANCE	85,975	86,125	86,275	86,275

REVENUES	(1) ACTUAL PRIOR YEAR ENDING 6/30/2022	(2) ESTIMATED CURRENT YEAR ENDING 6/30/2023	(3) BUDGET YEAR TENTATIVE APPROVED	(4) ENDING 06/30/24 FINAL APPROVED
Miscellaneous				
Investment income	(106)	-	-	-
Subtotal	(106)	-	-	-
OTHER FINANCING SOURCES:				
Operating Transfers In (Schedule T)				
BEGINNING FUND BALANCE	6,899	6,793	6,793	6,793
Prior Period Adjustment(s)				
Residual Equity Transfers				
TOTAL BEGINNING FUND BALANCE	6,899	6,793	6,793	6,793
TOTAL RESOURCES	6,793	6,793	6,793	6,793
EXPENDITURES				
General Government				
Services and Supplies	-	-	6,793	6,793
Subtotal	-	-	6,793	6,793
OTHER USES:				
CONTINGENCY (not to exceed 3% of Total Expenditures)				
Operating Transfers Out (Schedule T)				
ENDING FUND BALANCE:	6,793	6,793	-	-
TOTAL COMMITMENTS & FUND BALANCE	6,793	6,793	6,793	6,793

REVENUES	(1) ACTUAL PRIOR YEAR ENDING 6/30/2022	(2) ESTIMATED CURRENT YEAR ENDING 6/30/2023	(3) BUDGET YEAR TENTATIVE APPROVED	(4) ENDING 06/30/24 FINAL APPROVED
Miscellaneous				
Investment income	(11)	100	100	100
Subtotal	(11)	100	100	100
OTHER FINANCING SOURCES:				
Operating Transfers In (Schedule T)				
BEGINNING FUND BALANCE	702	691	791	791
Prior Period Adjustment(s)				
Residual Equity Transfers				
TOTAL BEGINNING FUND BALANCE	702	691	791	791
TOTAL RESOURCES	691	791	891	891
EXPENDITURES				
General Government				
Services and Supplies	-	-	891	891
Subtotal	-	-	891	891
OTHER USES:				
CONTINGENCY (not to exceed 3% of Total Expenditures)				
Operating Transfers Out (Schedule T)				
ENDING FUND BALANCE:	691	791	-	-
TOTAL COMMITMENTS & FUND BALANCE	691	791	891	891

REVENUES	(1) ACTUAL PRIOR YEAR ENDING 6/30/2022	(2) ESTIMATED CURRENT YEAR ENDING 6/30/2023	(3) BUDGET YEAR TENTATIVE APPROVED	(4) ENDING 06/30/24 FINAL APPROVED
Miscellaneous				
Investment income	(2,012)	-	-	-
Subtotal	(2,012)	-	-	-
OTHER FINANCING SOURCES:				
Operating Transfers In (Schedule T)				
BEGINNING FUND BALANCE	130,899	128,887	128,887	128,887
Prior Period Adjustment(s)				
Residual Equity Transfers				
TOTAL BEGINNING FUND BALANCE	130,899	128,887	128,887	128,887
TOTAL RESOURCES	128,887	128,887	128,887	128,887
EXPENDITURES				
General Government				
Services and Supplies	-	-	128,887	128,887
Subtotal	-	-	128,887	128,887
OTHER USES:				
CONTINGENCY (not to exceed 3% of Total Expenditures)				
Operating Transfers Out (Schedule T)				
ENDING FUND BALANCE:	128,887	128,887	-	-
TOTAL COMMITMENTS & FUND BALANCE	128,887	128,887	128,887	128,887

REVENUES	(1) ACTUAL PRIOR YEAR ENDING 6/30/2022	(2) ESTIMATED CURRENT YEAR ENDING 6/30/2023	(3) BUDGET YEAR TENTATIVE APPROVED	(4) ENDING 06/30/24 FINAL APPROVED
Miscellaneous				
Investment income	(144)	-	-	-
Subtotal	(144)	-	-	-
OTHER FINANCING SOURCES:				
Operating Transfers In (Schedule T)				
BEGINNING FUND BALANCE	9,414	9,270	9,270	9,270
Prior Period Adjustment(s)				
Residual Equity Transfers				
TOTAL BEGINNING FUND BALANCE	9,414	9,270	9,270	9,270
TOTAL RESOURCES	9,270	9,270	9,270	9,270
EXPENDITURES				
General Government				
Services and Supplies	-	-	9,270	9,270
Subtotal	-	-	9,270	9,270
OTHER USES:				
CONTINGENCY (not to exceed 3% of Total Expenditures)				
Operating Transfers Out (Schedule T)				
ENDING FUND BALANCE:	9,270	9,270	-	-
TOTAL COMMITMENTS & FUND BALANCE	9,270	9,270	9,270	9,270

REVENUES	(1) ACTUAL PRIOR YEAR ENDING 6/30/2022	(2) ESTIMATED CURRENT YEAR ENDING 6/30/2023	(3) BUDGET YEAR TENTATIVE APPROVED	(4) ENDING 06/30/24 FINAL APPROVED
Miscellaneous				
Investment income	(38,622)	6,000	6,000	6,000
Reimbursements	-	30,000	30,000	30,000
Subtotal	(38,622)	36,000	36,000	36,000
OTHER FINANCING SOURCES:				
Operating Transfers In (Schedule T)				
BEGINNING FUND BALANCE	3,442,783	3,404,161	3,063,873	3,440,161
Prior Period Adjustment(s)				
Residual Equity Transfers				
TOTAL BEGINNING FUND BALANCE	3,442,783	3,404,161	3,063,873	3,440,161
TOTAL RESOURCES	3,404,161	3,440,161	3,099,873	3,476,161
EXPENDITURES				
General Government				
Service and Supplies	-	-	337,622	401,510
Subtotal	-	-	337,622	401,510
OTHER USES:				
CONTINGENCY (not to exceed 3% of Total Expenditures)				
Operating Transfers Out (Schedule T)				
ENDING FUND BALANCE:	3,404,161	3,440,161	2,762,251	3,074,651
TOTAL COMMITMENTS & FUND BALANCE	3,404,161	3,440,161	3,099,873	3,476,161

REVENUES	(1) ACTUAL PRIOR YEAR ENDING 6/30/2022	(2) ESTIMATED CURRENT YEAR ENDING 6/30/2023	(3) BUDGET YEAR TENTATIVE APPROVED	(4) ENDING 06/30/24 FINAL APPROVED
Charges for Services				
General Government				
Other - Tax Receiver Commissions	13,548	18,000	18,000	18,000
Subtotal	13,548	18,000	18,000	18,000
OTHER FINANCING SOURCES:				
Operating Transfers In (Schedule T)				
BEGINNING FUND BALANCE	45,069	42,597	24,528	24,528
Prior Period Adjustment(s)				
Residual Equity Transfers				
TOTAL BEGINNING FUND BALANCE	45,069	42,597	24,528	24,528
TOTAL RESOURCES	58,617	60,597	42,528	42,528
EXPENDITURES				
General Government				
Services and Supplies	-	36,069	36,069	36,069
Capital Outlay	16,020	-	-	-
Subtotal	16,020	36,069	36,069	36,069
OTHER USES:				
CONTINGENCY (not to exceed 3% of Total Expenditures)				
Operating Transfers Out (Schedule T)				
ENDING FUND BALANCE:	42,597	24,528	6,459	6,459
TOTAL COMMITMENTS & FUND BALANCE	58,617	60,597	42,528	42,528

REVENUES	(1) ACTUAL PRIOR YEAR ENDING 6/30/2022	(2) ESTIMATED CURRENT YEAR ENDING 6/30/2023	(3) BUDGET YEAR TENTATIVE APPROVED	(4) ENDING 06/30/24 FINAL APPROVED
Miscellaneous				
Investment Income	(2,299)	743	743	743
Subtotal	(2,299)	743	743	743
OTHER FINANCING SOURCES:				
Operating Transfers In (Schedule T)				
BEGINNING FUND BALANCE	149,551	147,252	2,595	2,595
Prior Period Adjustment(s)				
Residual Equity Transfers				
TOTAL BEGINNING FUND BALANCE	149,551	147,252	2,595	2,595
TOTAL RESOURCES	147,252	147,995	3,338	3,338
EXPENDITURES				
Public Works				
Services and Supplies	-	145,400	3,338	3,338
Subtotal	-	145,400	3,338	3,338
OTHER USES:				
CONTINGENCY (not to exceed 3% of Total Expenditures)				
Operating Transfers Out (Schedule T)				
ENDING FUND BALANCE:	147,252	2,595	-	-
TOTAL COMMITMENTS & FUND BALANCE	147,252	147,995	3,338	3,338

REVENUES	(1) ACTUAL PRIOR YEAR ENDING 6/30/2022	(2) ESTIMATED CURRENT YEAR ENDING 6/30/2023	(3) BUDGET YEAR TENTATIVE APPROVED	(4) ENDING 06/30/24 FINAL APPROVED
Charges for Services				
Other	13,411	12,000	12,000	12,000
Subtotal	13,411	12,000	12,000	12,000
OTHER FINANCING SOURCES:				
Operating Transfers In (Schedule T)				
BEGINNING FUND BALANCE	-	-	-	-
Prior Period Adjustment(s)				
Residual Equity Transfers				
TOTAL BEGINNING FUND BALANCE	-	-	-	-
TOTAL RESOURCES	13,411	12,000	12,000	12,000
EXPENDITURES				
General Government				
Services and Supplies	13,411	12,000	12,000	12,000
Subtotal	13,411	12,000	12,000	12,000
OTHER USES:				
CONTINGENCY (not to exceed 3% of Total Expenditures)				
Operating Transfers Out (Schedule T)				
ENDING FUND BALANCE:	-	-	-	-
TOTAL COMMITMENTS & FUND BALANCE	13,411	12,000	12,000	12,000

REVENUES	(1) ACTUAL PRIOR YEAR ENDING 6/30/2022	(2) ESTIMATED CURRENT YEAR ENDING 6/30/2023	(3) BUDGET YEAR TENTATIVE APPROVED	(4) ENDING 06/30/24 FINAL APPROVED
Charges for Services				
Pahranagat Valley	27,602	33,000	33,000	33,000
Meadow Valley	10,994	12,000	12,000	12,000
Subtotal Charges for Services	38,596	45,000	45,000	45,000
Miscellaneous				
Investment income (loss)	(1,678)	-	-	-
Subtotal	36,918	45,000	45,000	45,000
OTHER FINANCING SOURCES:				
Operating Transfers In (Schedule T)				
BEGINNING FUND BALANCE	113,481	120,804	65,804	129,442
Prior Period Adjustment(s)				
Residual Equity Transfers				
TOTAL BEGINNING FUND BALANCE	113,481	120,804	65,804	129,442
TOTAL RESOURCES	150,399	165,804	110,804	174,442
EXPENDITURES				
Judicial				
Salaries and Wages	-	-	-	-
Benefits	-	-	-	-
Services and Supplies	-	10,000	10,000	10,000
Capital Outlay	29,595	26,362	93,000	93,000
Subtotal	29,595	36,362	103,000	103,000
OTHER USES:				
CONTINGENCY (not to exceed 3% of Total Expenditures)				
Operating Transfers Out (Schedule T)				
ENDING FUND BALANCE:	120,804	129,442	7,804	71,442
TOTAL COMMITMENTS & FUND BALANCE	150,399	165,804	110,804	174,442

REVENUES	(1) ACTUAL PRIOR YEAR ENDING 6/30/2022	(2) ESTIMATED CURRENT YEAR ENDING 6/30/2023	(3) BUDGET YEAR TENTATIVE APPROVED	(4) ENDING 06/30/24 FINAL APPROVED
Planning				
Charges for Services	13,544	10,500	10,500	10,500
Miscellaneous				
Investment income	(1,192)	-	-	-
Subtotal	12,352	10,500	10,500	10,500
OTHER FINANCING SOURCES:				
Operating Transfers In (Schedule T)				
Federal in Lieu Tax	75,000	76,411	77,000	77,000
Proceeds from capital assets disposal	2,000	-	-	-
Subtotal Other Financing Sources	77,000	76,411	77,000	77,000
BEGINNING FUND BALANCE	50,062	55,741	38,652	38,652
Prior Period Adjustment(s)				
Residual Equity Transfers				
TOTAL BEGINNING FUND BALANCE	50,062	55,741	38,652	38,652
TOTAL RESOURCES	139,414	142,652	126,152	126,152
EXPENDITURES				
Public Works				
Salaries and Wages	55,988	66,134	71,366	74,880
Employee Benefits	19,726	24,206	26,907	27,025
Services and Supplies	6,264	11,660	13,060	9,428
Capital Outlay	1,695	2,000	14,819	14,819
Subtotal	83,673	104,000	126,152	126,152
OTHER USES:				
CONTINGENCY (not to exceed 3% or Total Expenditures)				
Operating Transfers Out (Schedule T)				
ENDING FUND BALANCE:	55,741	38,652	-	-
TOTAL COMMITMENTS & FUND BALANCE	139,414	142,652	126,152	126,152

REVENUES	(1) ACTUAL PRIOR YEAR ENDING 6/30/2022	(2) ESTIMATED CURRENT YEAR ENDING 6/30/2023	(3) BUDGET YEAR TENTATIVE APPROVED	(4) ENDING 06/30/24 FINAL APPROVED
Charges for Services				
Judicial	-	-	-	-
Subtotal	-	-	-	-
OTHER FINANCING SOURCES:				
Operating Transfers In (Schedule T)				
BEGINNING FUND BALANCE	5,136	5,136	5,120	5,120
Prior Period Adjustment(s)				
Residual Equity Transfers				
TOTAL BEGINNING FUND BALANCE	5,136	5,136	5,120	5,120
TOTAL RESOURCES	5,136	5,136	5,120	5,120
EXPENDITURES				
Judicial				
Services and Supplies	-	16	16	16
Subtotal	-	16	16	16
OTHER USES:				
CONTINGENCY (not to exceed 3% or Total Expenditures)				
Operating Transfers Out (Schedule T)				
ENDING FUND BALANCE:	5,136	5,120	5,104	5,104
TOTAL COMMITMENTS & FUND BALANCE	5,136	5,136	5,120	5,120

REVENUES	(1) ACTUAL PRIOR YEAR ENDING 6/30/2022	(2) ESTIMATED CURRENT YEAR ENDING 6/30/2023	(3) BUDGET YEAR TENTATIVE APPROVED	(4) ENDING 06/30/24 FINAL APPROVED
Charges for Services				
Judicial				
Clerk Fees	16,983	10,000	10,000	10,000
Subtotal	16,983	10,000	10,000	10,000
OTHER FINANCING SOURCES:				
Operating Transfers In (Schedule T)				
County Indigent	30,000	60,000	15,000	15,000
BEGINNING FUND BALANCE	4,235	14,958	45,000	45,000
Prior Period Adjustment(s)				
Residual Equity Transfers				
TOTAL BEGINNING FUND BALANCE	4,235	14,958	45,000	45,000
TOTAL RESOURCES	51,218	84,958	70,000	70,000
EXPENDITURES				
Judicial				
Services and Supplies	36,260	39,958	70,000	70,000
Subtotal	36,260	39,958	70,000	70,000
OTHER USES:				
CONTINGENCY (not to exceed 3% or Total Expenditures)				
Operating Transfers Out (Schedule T)				
ENDING FUND BALANCE:	14,958	45,000	-	-
TOTAL COMMITMENTS & FUND BALANCE	51,218	84,958	70,000	70,000

REVENUES	(1) ACTUAL PRIOR YEAR ENDING 6/30/2022	(2) ESTIMATED CURRENT YEAR ENDING 6/30/2023	(3) BUDGET YEAR TENTATIVE APPROVED	(4) ENDING 06/30/24 FINAL APPROVED
Charges for Services				
Judicial				
Clerk Fees	920	700	700	700
Miscellaneous				
Investment income	(215)	-	-	-
Subtotal	705	700	700	700
OTHER FINANCING SOURCES:				
Operating Transfers In (Schedule T)				
BEGINNING FUND BALANCE	13,474	14,179	14,879	14,879
Prior Period Adjustment(s)				
Residual Equity Transfers				
TOTAL BEGINNING FUND BALANCE	13,474	14,179	14,879	14,879
TOTAL RESOURCES	14,179	14,879	15,579	15,579
EXPENDITURES				
Judicial				
Services and Supplies	-	-	15,579	15,579
Subtotal	-	-	15,579	15,579
OTHER USES:				
CONTINGENCY (not to exceed 3% or Total Expenditures)				
Operating Transfers Out (Schedule T)				
ENDING FUND BALANCE:	14,179	14,879	-	-
TOTAL COMMITMENTS & FUND BALANCE	14,179	14,879	15,579	15,579

REVENUES	(1) ACTUAL PRIOR YEAR ENDING 6/30/2022	(2) ESTIMATED CURRENT YEAR ENDING 6/30/2023	(3) BUDGET YEAR TENTATIVE APPROVED	(4) ENDING 06/30/24 FINAL APPROVED
Charges for Services				
Judicial				
Clerk Fees	4,961	3,500	3,500	3,500
Miscellaneous				
Investment income	(1,013)	-	-	-
Subtotal	3,948	3,500	3,500	3,500
OTHER FINANCING SOURCES:				
Operating Transfers In (Schedule T)				
BEGINNING FUND BALANCE	63,620	67,568	13,593	13,593
Prior Period Adjustment(s)				
Residual Equity Transfers				
TOTAL BEGINNING FUND BALANCE	63,620	67,568	13,593	13,593
TOTAL RESOURCES	67,568	71,068	17,093	17,093
EXPENDITURES				
Judicial				
Services and Supplies	-	57,475	-	-
Subtotal	-	57,475	-	-
OTHER USES:				
CONTINGENCY (not to exceed 3% or Total Expenditures)				
Operating Transfers Out (Schedule T)				
ENDING FUND BALANCE:	67,568	13,593	17,093	17,093
TOTAL COMMITMENTS & FUND BALANCE	67,568	71,068	17,093	17,093

REVENUES	(1) ACTUAL PRIOR YEAR ENDING 6/30/2022	(2) ESTIMATED CURRENT YEAR ENDING 6/30/2023	(3) BUDGET YEAR TENTATIVE APPROVED	(4) ENDING 06/30/24 FINAL APPROVED
Miscellaneous				
Rent	13,050	16,800	17,400	17,400
Subtotal	13,050	16,800	17,400	17,400
OTHER FINANCING SOURCES:				
Operating Transfers In (Schedule T)				
Federal In Lieu	50,000	50,000	50,000	50,000
Sale of Capital Assets				
Sale of Alamo Industrial Park	162,800	-	-	-
Total other financing sources	212,800	50,000	50,000	50,000
BEGINNING FUND BALANCE	73,924	231,284	220,135	220,135
Prior Period Adjustment(s)				
Residual Equity Transfers				
TOTAL BEGINNING FUND BALANCE	73,924	231,284	220,135	220,135
TOTAL RESOURCES	299,774	298,084	287,535	287,535
EXPENDITURES				
General Government				
Salaries and Wages	19,384	21,932	22,691	23,118
Employee Benefits	5,685	6,585	7,215	7,416
Services and Supplies	27,499	43,232	51,232	42,604
Capital Outlay	8,650	6,200	-	8,000
Subtotal	61,218	77,949	81,138	81,138
Public Works				
Capital Outlay	7,272	-	206,397	206,397
Subtotal	68,490	77,949	287,535	287,535
OTHER USES:				
CONTINGENCY (not to exceed 3% or Total Expenditures)				
Operating Transfers Out (Schedule T)				
ENDING FUND BALANCE:	231,284	220,135	-	-
TOTAL COMMITMENTS & FUND BALANCE	299,774	298,084	287,535	287,535

REVENUES	(1) ACTUAL PRIOR YEAR ENDING 6/30/2022	(2) ESTIMATED CURRENT YEAR ENDING 6/30/2023	(3) BUDGET YEAR TENTATIVE APPROVED	(4) ENDING 06/30/24 FINAL APPROVED
Miscellaneous				
Investment Income	(4,389)	6,265	6,500	6,500
Subtotal	(4,389)	6,265	6,500	6,500
OTHER FINANCING SOURCES:				
Operating Transfers In (Schedule T)				
General Fund	239,083	250,000	250,000	250,000
Federal In Lieu Tax	-	-	50,000	50,000
Subtotal	239,083	250,000	300,000	300,000
BEGINNING FUND BALANCE	318,428	479,591	514,548	514,548
Prior Period Adjustment(s)				
Residual Equity Transfers				
TOTAL BEGINNING FUND BALANCE	318,428	479,591	514,548	514,548
TOTAL RESOURCES	553,122	735,856	821,048	821,048
EXPENDITURES				
General Government				
Services and Supplies	3,954	-	-	-
Capital Outlay	69,577	221,308	630,000	630,000
Subtotal	73,531	221,308	630,000	630,000
OTHER USES:				
CONTINGENCY (not to exceed 3% or Total Expenditures)				
Operating Transfers Out (Schedule T)				
ENDING FUND BALANCE:	479,591	514,548	191,048	191,048
TOTAL COMMITMENTS & FUND BALANCE	553,122	735,856	821,048	821,048

REVENUES	(1) ACTUAL PRIOR YEAR ENDING 6/30/2022	(2) ESTIMATED CURRENT YEAR ENDING 6/30/2023	(3) BUDGET YEAR TENTATIVE APPROVED	(4) ENDING 06/30/24 FINAL APPROVED
Charges for Services				
Judicial	-	-	-	-
Subtotal	-	-	-	-
OTHER FINANCING SOURCES:				
Operating Transfers In (Schedule T)				
BEGINNING FUND BALANCE	-	-	-	-
Prior Period Adjustment(s)				
Residual Equity Transfers				
TOTAL BEGINNING FUND BALANCE	-	-	-	-
TOTAL RESOURCES	-	-	-	-
EXPENDITURES				
Judicial				
Services and Supplies	-	-	-	-
Subtotal	-	-	-	-
OTHER USES:				
CONTINGENCY (not to exceed 3% or Total Expenditures)				
Operating Transfers Out (Schedule T)				
General Fund	-	-	-	-
ENDING FUND BALANCE:	-	-	-	-
TOTAL COMMITMENTS & FUND BALANCE	-	-	-	-

REVENUES	(1) ACTUAL PRIOR YEAR ENDING 6/30/2022	(2) ESTIMATED CURRENT YEAR ENDING 6/30/2023	(3) BUDGET YEAR TENTATIVE APPROVED	(4) ENDING 06/30/24 FINAL APPROVED
Charges for Services				
Clerk Fees	9,300	10,000	10,000	10,000
Miscellaneous				
Investment Income	(146)	-	-	-
Subtotal	9,154	10,000	10,000	10,000
OTHER FINANCING SOURCES:				
Operating Transfers In (Schedule T)				
BEGINNING FUND BALANCE	3,449	12,603	22,603	22,603
Prior Period Adjustment(s)				
Residual Equity Transfers				
TOTAL BEGINNING FUND BALANCE	3,449	12,603	22,603	22,603
TOTAL RESOURCES	12,603	22,603	32,603	32,603
EXPENDITURES				
Judicial				
Services and Supplies	-	-	32,603	32,603
Subtotal	-	-	32,603	32,603
OTHER USES:				
CONTINGENCY (not to exceed 3% or Total Expenditures)				
Operating Transfers Out (Schedule T)				
ENDING FUND BALANCE:	12,603	22,603	-	-
TOTAL COMMITMENTS & FUND BALANCE	12,603	22,603	32,603	32,603

REVENUES	(1) ACTUAL PRIOR YEAR ENDING 6/30/2022	(2) ESTIMATED CURRENT YEAR ENDING 6/30/2023	(3) BUDGET YEAR TENTATIVE APPROVED	(4) ENDING 06/30/24 FINAL APPROVED
Taxes				
Property Taxes	127,637	131,232	132,217	132,217
Intergovernmental				
Fish and Wildlife	107	-	-	-
Miscellaneous				
Investment income	(1,080)	-	-	-
Subtotal	126,664	131,232	132,217	132,217
OTHER FINANCING SOURCES (specify)				
Operating Transfers In (Schedule T)	-	-	-	-
BEGINNING FUND BALANCE	13,772	18,422	1,324	1,324
Prior Period Adjustments				
Residual Equity Transfers				
TOTAL BEGINNING FUND BALANCE	13,772	18,422	1,324	1,324
TOTAL AVAILABLE RESOURCES	140,436	149,654	133,541	133,541

EXPENDITURES	(1) ACTUAL PRIOR YEAR ENDING 6/30/2022	(2) ESTIMATED CURRENT YEAR ENDING 6/30/2023	(3) BUDGET YEAR TENTATIVE APPROVED	(4) ENDING 06/30/24 FINAL APPROVED
Intergovernmental				
Alamo Capital Projects	2,535	2,624	2,644	2,644
Caliente Capital Projects	8,869	9,187	9,256	9,256
Panaca Capital Projects	5,068	5,249	5,289	5,289
Pioche Capital Projects	3,802	3,938	3,968	3,968
Subtotal	20,274	20,998	21,157	21,157
OTHER USES				
CONTINGENCY (not to exceed 3% of Total Expenditures)				
Operating Transfer out				
Vehicle Capital Projects	101,740	127,332	111,558	111,558
ENDING FUND BALANCE	18,422	1,324	826	826
TOTAL COMMITMENTS & FUND BALANCE	140,436	149,654	133,541	133,541

REVENUES	(1) ACTUAL PRIOR YEAR ENDING 6/30/2022	(2) ESTIMATED CURRENT YEAR ENDING 6/30/2023	(3) BUDGET YEAR TENTATIVE APPROVED	(4) ENDING 06/30/24 FINAL APPROVED
Miscellaneous				
Investment income	-	-	-	-
Subtotal	-	-	-	-
OTHER FINANCING SOURCES:				
Operating Transfers In (Schedule T)				
Ambulance Fund	-	-	-	-
BEGINNING FUND BALANCE	-	-	-	-
Prior Period Adjustment(s)				
Residual Equity Transfers				
TOTAL BEGINNING FUND BALANCE	-	-	-	-
TOTAL RESOURCES	-	-	-	-
EXPENDITURES				
Capital Projects				
Capital Outlay	-	-	-	-
Intergovernmental				
Transfer Fund to Lincoln County Fire District	-	-	-	-
Subtotal	-	-	-	-
Special items				
Disposal	-			
OTHER USES				
CONTINGENCY (not to exceed 3% of Total Expenditures)				
Operating Transfers Out (Schedule T)				
ENDING FUND BALANCE:	-	-	-	-
TOTAL COMMITMENTS & FUND BALANCE	-	-	-	-

REVENUES	(1) ACTUAL PRIOR YEAR ENDING 6/30/2022	(2) ESTIMATED CURRENT YEAR ENDING 6/30/2023	(3) BUDGET YEAR TENTATIVE APPROVED	(4) ENDING 06/30/24 FINAL APPROVED
Miscellaneous				
Investment income	(1,176)	-	-	-
OTHER FINANCING SOURCES:				
Operating Transfers In (Schedule T)				
General Fund	-	-	100,000	20,442
Capital Improvements	101,740	127,332	111,558	111,558
Subtotal Transfers In	101,740	127,332	211,558	132,000
Capital Sales	-	-	-	30,000
Financed purchases proceeds	142,244	-	-	150,000
Subtotal Other Financing Sources	243,984	127,332	211,558	312,000
BEGINNING FUND BALANCE	13,897	(4,277)	50,024	72,356
Prior Period Adjustment(s)				
TOTAL BEGINNING FUND BALANCE	13,897	(4,277)	50,024	72,356
TOTAL RESOURCES	256,705	123,055	261,582	384,356
EXPENDITURES				
Capital Projects				
Capital Outlay	174,552	-	112,000	232,000
Debt Service				
(3) Vehicles for Sheriff (FY2024-26) (3PU)				
Principal	-	-	-	47,527
Interest	-	-	-	6,421
(4) Vehicles for Sheriff (FY2022-24)(3 PU)				
Principal	-	44,204	47,370	47,340
Interest	-	6,495	3,359	3,359
(4) Vehicles for Sheriff (FY2019-21)				
Principal	84,140	-	-	-
Interest	2,290	-	-	-
Subtotal Debt Service	86,430	50,699	50,729	104,647
Subtotal	260,982	50,699	162,729	336,647
OTHER USES:				
CONTINGENCY (not to exceed 3% of Total Expenditures)				
Operating Transfers Out (Schedule T)				
ENDING FUND BALANCE:	(4,277)	72,356	98,853	47,709
TOTAL COMMITMENTS & FUND BALANCE	256,705	123,055	261,582	384,356

	(1)	(2)	(3)	(4)
			BUDGET YEAR	ENDING 06/30/24
REVENUES	ACTUAL PRIOR YEAR ENDING 6/30/2022	ESTIMATED CURRENT YEAR ENDING 6/30/2023	TENTATIVE APPROVED	FINAL APPROVED
Miscellaneous				
Investment income	(494)	500	500	500
Subtotal	(494)	500	500	500
OTHER FINANCING SOURCES:				
Operating Transfers In (Schedule T)				
Fair Board	5,000	5,000	5,000	5,000
BEGINNING FUND BALANCE	14,552	18,079	23,579	23,579
Prior Period Adjustment(s)				
Residual Equity Transfers				
TOTAL BEGINNING FUND BALANCE	14,552	18,079	23,579	23,579
TOTAL RESOURCES	19,058	23,579	29,079	29,079
EXPENDITURES				
Capital Projects				
Services and Supplies	979	-	10,000	10,000
Capital Outlay	-	-	19,079	19,079
Subtotal	979	-	29,079	29,079
OTHER USES:				
CONTINGENCY (not to exceed 3% of Total Expenditures)				
Operating Transfers Out (Schedule T)				
ENDING FUND BALANCE:	18,079	23,579	-	-
TOTAL COMMITMENTS & FUND BALANCE	19,058	23,579	29,079	29,079

REVENUES	(1) ACTUAL PRIOR YEAR ENDING 6/30/2022	(2) ESTIMATED CURRENT YEAR ENDING 6/30/2023	(3) BUDGET YEAR TENTATIVE APPROVED	(4) ENDING 06/30/24 FINAL APPROVED
Miscellaneous				
Investment income	(107)	-	-	-
Subtotal	(107)	-	-	-
OTHER FINANCING SOURCES:				
Operating Transfers In (Schedule T)				
BEGINNING FUND BALANCE	3,149	3,042	3,042	3,042
Prior Period Adjustment(s)				
Residual Equity Transfers				
TOTAL BEGINNING FUND BALANCE	3,149	3,042	3,042	3,042
TOTAL RESOURCES	3,042	3,042	3,042	3,042
EXPENDITURES				
Capital Projects				
Capital Outlay	-	-	3,042	3,042
Subtotal	-	-	3,042	3,042
OTHER USES:				
CONTINGENCY (not to exceed 3% of Total Expenditures)				
Operating Transfers Out (Schedule T)				
ENDING FUND BALANCE:	3,042	3,042	-	-
TOTAL COMMITMENTS & FUND BALANCE	3,042	3,042	3,042	3,042

REVENUES	(1) ACTUAL PRIOR YEAR ENDING 6/30/2022	(2) ESTIMATED CURRENT YEAR ENDING 6/30/2023	(3) BUDGET YEAR TENTATIVE APPROVED	(4) ENDING 06/30/24 FINAL APPROVED
Miscellaneous				
Investment income	(2,027)	-	-	-
Subtotal	(2,027)	-	-	-
OTHER FINANCING SOURCES:				
Operating Transfers In (Schedule T)				
Road Fund	100,000	-	-	-
BEGINNING FUND BALANCE	116,056	117,174	117,174	117,174
Prior Period Adjustment(s)				
Residual Equity Transfers				
TOTAL BEGINNING FUND BALANCE	116,056	117,174	117,174	117,174
TOTAL RESOURCES	214,029	117,174	117,174	117,174
EXPENDITURES				
Capital Projects				
Capital Outlay	96,855	-	117,000	117,000
Subtotal	96,855	-	117,000	117,000
OTHER USES:				
CONTINGENCY (not to exceed 3% of Total Expenditures)				
Operating Transfers Out (Schedule T)				
ENDING FUND BALANCE:	117,174	117,174	174	174
TOTAL COMMITMENTS & FUND BALANCE	214,029	117,174	117,174	117,174

REVENUES	(1) ACTUAL PRIOR YEAR ENDING 6/30/2022	(2) ESTIMATED CURRENT YEAR ENDING 6/30/2023	(3) BUDGET YEAR TENTATIVE APPROVED	(4) ENDING 06/30/24 FINAL APPROVED
Miscellaneous				
Investment income	(1,271)	-	-	-
Subtotal	(1,271)	-	-	-
OTHER FINANCING SOURCES:				
Operating Transfers In (Schedule T)				
BEGINNING FUND BALANCE	82,660	81,389	81,389	81,389
Prior Period Adjustment(s)				
Residual Equity Transfers				
TOTAL BEGINNING FUND BALANCE	82,660	81,389	81,389	81,389
TOTAL RESOURCES	81,389	81,389	81,389	81,389
EXPENDITURES				
Capital Projects				
Capital outlay	-	-	81,389	81,389
Subtotal	-	-	81,389	81,389
OTHER USES:				
CONTINGENCY (not to exceed 3% of Total Expenditures)				
Operating Transfers Out (Schedule T)				
ENDING FUND BALANCE:	81,389	81,389	-	-
TOTAL COMMITMENTS & FUND BALANCE	81,389	81,389	81,389	81,389

REVENUES	(1) ACTUAL PRIOR YEAR ENDING 6/30/2022	(2) ESTIMATED CURRENT YEAR ENDING 6/30/2023	(3) BUDGET YEAR TENTATIVE APPROVED	(4) ENDING 06/30/24 FINAL APPROVED
Miscellaneous				
Investment income	(481)	-	-	-
Subtotal	(481)	-	-	-
OTHER FINANCING SOURCES:				
Operating Transfers In (Schedule T)				
BEGINNING FUND BALANCE	31,283	30,802	30,802	30,802
Prior Period Adjustment(s)				
Residual Equity Transfers				
TOTAL BEGINNING FUND BALANCE	31,283	30,802	30,802	30,802
TOTAL RESOURCES	30,802	30,802	30,802	30,802
EXPENDITURES				
Capital Projects				
Capital outlay	-	-	30,802	30,802
Subtotal	-	-	30,802	30,802
OTHER USES:				
CONTINGENCY (not to exceed 3% of Total Expenditures)				
Operating Transfers Out (Schedule T)				
ENDING FUND BALANCE:	30,802	30,802	-	-
TOTAL COMMITMENTS & FUND BALANCE	30,802	30,802	30,802	30,802

REVENUES	(1) ACTUAL PRIOR YEAR ENDING 6/30/2022	(2) ESTIMATED CURRENT YEAR ENDING 6/30/2023	(3) BUDGET YEAR TENTATIVE APPROVED	(4) ENDING 06/30/24 FINAL APPROVED
Taxes				
Property Taxes	25,523	26,247	26,443	26,443
Subtotal	25,523	26,247	26,443	26,443
OTHER FINANCING SOURCES:				
Operating Transfers In (Schedule T)				
BEGINNING FUND BALANCE	-	-	-	-
Prior Period Adjustment(s)				
Residual Equity Transfers				
TOTAL BEGINNING FUND BALANCE	-	-	-	-
TOTAL RESOURCES	25,523	26,247	26,443	26,443
EXPENDITURES				
Intergovernmental				
Payment to State	25,523	26,247	26,443	26,443
Subtotal	25,523	26,247	26,443	26,443
OTHER USES:				
CONTINGENCY (not to exceed 3% or Total Expenditures)				
Operating Transfers Out (Schedule T)				
ENDING FUND BALANCE:	-	-	-	-
TOTAL COMMITMENTS & FUND BALANCE	25,523	26,247	26,443	26,443

REVENUES	(1) ACTUAL PRIOR YEAR ENDING 6/30/2022	(2) ESTIMATED CURRENT YEAR ENDING 6/30/2023	(3) BUDGET YEAR TENTATIVE APPROVED	(4) ENDING 06/30/24 FINAL APPROVED
Taxes				
Property Taxes	38,268	39,369	39,664	39,664
Subtotal	38,268	39,369	39,664	39,664
OTHER FINANCING SOURCES:				
Operating Transfers In (Schedule T)				
BEGINNING FUND BALANCE	-	-	-	-
Prior Period Adjustment(s)				
Residual Equity Transfers				
TOTAL BEGINNING FUND BALANCE	-	-	-	-
TOTAL RESOURCES	38,268	39,369	39,664	39,664
EXPENDITURES				
Intergovernmental				
Payment to State	38,268	39,369	39,664	39,664
Subtotal	38,268	39,369	39,664	39,664
OTHER USES:				
CONTINGENCY (not to exceed 3% or Total Expenditures)				
Operating Transfers Out (Schedule T)				
ENDING FUND BALANCE:	-	-	-	-
TOTAL COMMITMENTS & FUND BALANCE	38,268	39,369	39,664	39,664

RESOURCES **REVENUES**	(1) ACTUAL PRIOR YEAR ENDING 6/30/2022	(2) ESTIMATED CURRENT YEAR ENDING 6/30/2023	(3) BUDGET YEAR TENTATIVE APPROVED	(4) ENDING 06/30/24 FINAL APPROVED
Subtotal	-	-	-	-
OTHER FINANCING SOURCES:				
Operating Transfers In (Schedule T)				
BEGINNING FUND BALANCE	-	-	-	-
Prior Period Adjustment(s)				
Residual Equity Transfers				
TOTAL BEGINNING FUND BALANCE	-	-	-	-
TOTAL RESOURCES	-	-	-	-
EXPENDITURES				
Debt Service				
Principal	-	-	-	-
Interest	-	-	-	-
Subtotal	-	-	-	-
OTHER USES				
CONTINGENCY (not to exceed 3% of Total Expenditures)				
Operating Transfers Out (Schedule T)				
ENDING FUND BALANCE:	-	-	-	-
Residual Equity Transfer				
TOTAL COMMITMENTS & FUND BALANCE	-	-	-	-

PROPRIETARY FUND	(1) ACTUAL PRIOR YEAR ENDING 6/30/2022	(2) ESTIMATED CURRENT YEAR ENDING 6/30/2023	(3) BUDGET YEAR ENDING 06/30/24 TENTATIVE APPROVED	(4) FINAL APPROVED
OPERATING REVENUE				
Charges for Services				
Public Works	38,994	20,000	20,000	20,000
Total Operating Revenue	38,994	20,000	20,000	20,000
OPERATING EXPENSE				
Public Works				
Salaries and Wages	47,297	30,279	31,071	31,448
Employee Benefits	1,559	10,427	11,431	11,572
Services and Supplies	2,667	13,085	12,585	12,585
Subtotal	51,523	53,791	55,087	55,605
Depreciation/amortization	-	1,000	54,791	54,791
Total Operating Expense	51,523	54,791	109,878	110,396
Operating Income or (Loss)	(12,529)	(34,791)	(89,878)	(90,396)
NONOPERATING REVENUES				
Investment income	(1,032)	-	-	-
Total Nonoperating Revenues	(1,032)	-	-	-
NONOPERATING EXPENSES				
Interest Expense	-	-	-	-
Total Nonoperating Expenses	-	-	-	-
Net Income before Operating Transfers	(13,561)	(34,791)	(89,878)	(90,396)
Operating Transfers (Schedule T)				
In				
Federal In Lieu Tax	50,000	50,000	-	-
Out	-	-	-	-
Net Operating Transfers	50,000	50,000	-	-
NET INCOME/(LOSS)	36,439	15,209	(89,878)	(90,396)

PROPRIETARY FUND	(1) ACTUAL PRIOR YEAR ENDING 6/30/2022	(2) ESTIMATED CURRENT YEAR ENDING 6/30/2023	(3) BUDGET YEAR TENTATIVE APPROVED	(4) ENDING 06/30/24 FINAL APPROVED
A. CASH FLOWS FROM OPERATING ACTIVITIES:				
Revenue	38,994	20,000	20,000	20,000
Expenses	(66,560)	(53,791)	(55,087)	(55,605)
a. Net cash provided by (or used for) operating activities	(27,566)	(33,791)	(35,087)	(35,605)
B. CASH FLOWS FROM NONCAPITAL FINANCING ACTIVITIES:				
Operating Transfers In	50,000	50,000	-	-
b. Net cash provided by (or used for) noncapital financing activities	50,000	50,000	-	-
C. CASH FLOWS FROM CAPITAL AND RELATED FINANCING ACTIVITIES:				
Purchase of capital assets	-	(500)	(500)	(500)
c. Net cash provided by (or used for) capital and related financing activities	-	(500)	(500)	(500)
D. CASH FLOWS FROM INVESTING ACTIVITIES:				
Investment Income (Loss)	(1,124)	-	-	-
d. Net cash provided by (or used in) investing activities	(1,124)	-	-	-
NET INCREASE (DECREASE) in cash and cash equivalents (a+b+c+d)	21,310	15,709	(35,587)	(36,105)
CASH AND CASH EQUIVALENTS AT JULY 1, 20xx	44,454	65,764	81,473	81,473
CASH AND CASH EQUIVALENTS AT JUNE 30, 20xx	65,764	81,473	45,886	45,368

PROPRIETARY FUND	(1) ACTUAL PRIOR YEAR ENDING 6/30/2022	(2) ESTIMATED CURRENT YEAR ENDING 6/30/2023	(3) BUDGET YEAR TENTATIVE APPROVED	(4) ENDING 06/30/24 FINAL APPROVED
OPERATING REVENUE				
Charges for Services				
Rent / Inmate fees 60/83/365	27,428	2,462,550	1,817,700	1,817,700
Dispatch Service Interlocal Agreements	-	55,000	55,000	55,000
Total Operating Revenue	27,428	2,517,550	1,872,700	1,872,700
OPERATING EXPENSE				
Public Safety - Jail				
Salaries and Wages	484,011	1,083,250	599,550	841,095
Employee Benefits	108,482	726,794	477,082	680,485
Services and Supplies	127,268	795,000	432,300	635,500
Subtotal Jail	719,761	2,605,044	1,508,932	2,157,080
Public Safety - Dispatch				
Salaries and Wages	283,597	271,923	227,778	240,164
Employee Benefits	102,150	96,221	128,934	131,282
Services and Supplies	415	5,000	16,643	16,643
Subtotal Dispatch	386,162	373,144	373,355	388,089
Subtotal	1,105,923	2,978,188	1,882,287	2,545,169
Depreciation/amortization	71,516	100,000	100,000	100,000
Total Operating Expense	1,177,439	3,078,188	1,982,287	2,645,169
Operating Income or (Loss)	(1,150,011)	(560,638)	(109,587)	(772,469)
NONOPERATING REVENUES				
COVID-19 Relief Grant	446,277	-	-	-
Total Nonoperating Revenues	446,277	-	-	-
NONOPERATING EXPENSES				
Loss on asset disposal	(13,092)			
Total Nonoperating Expenses	(13,092)	-	-	-
Net Income before Operating Transfers	(716,826)	(560,638)	(109,587)	(772,469)
Operating Transfers (Schedule T)				
In				
Federal In Lieu	49,000	238,350	-	-
General Fund	753,760	572,350	-	685,000
Grants	391,725	-	-	-
Subtotal Transfers In	1,194,485	810,700	-	685,000
Out	-	-	-	-
Net Operating Transfers	1,194,485	810,700	-	685,000
NET INCOME/(LOSS)	477,659	250,062	(109,587)	(87,469)

Lincoln County

(Local Government)

SCHEDULE F-1 REVENUES, EXPENSES AND NET INCOME

FUND Detention Center Enterprise (Fund 64)

PROPRIETARY FUND	(1) ACTUAL PRIOR YEAR ENDING 6/30/2022	(2) ESTIMATED CURRENT YEAR ENDING 6/30/2023	(3) BUDGET YEAR TENTATIVE APPROVED	(4) ENDING 06/30/24 FINAL APPROVED
A. CASH FLOWS FROM OPERATING ACTIVITIES:				
Revenue	27,428	2,517,550	1,872,700	1,872,700
Expenses	(1,311,665)	(2,978,188)	(1,882,287)	(2,545,169)
a. Net cash provided by (or used for) operating activities	(1,284,237)	(460,638)	(9,587)	(672,469)
B. CASH FLOWS FROM NONCAPITAL FINANCING ACTIVITIES:				
Operating Transfers	1,194,485	810,700	-	685,000
b. Net cash provided by (or used for) noncapital financing activities	1,194,485	810,700	-	685,000
C. CASH FLOWS FROM CAPITAL AND RELATED FINANCING ACTIVITIES:				
Purchase of capital assets	(315,801)	-	-	-
Grant income	446,277	-	-	-
c. Net cash provided by (or used for) capital and related financing activities	130,476	-	-	-
D. CASH FLOWS FROM INVESTING ACTIVITIES:				
Interest income	-	-	-	-
Rent	-	-	-	-
d. Net cash provided by (or used in) investing activities	-	-	-	-
NET INCREASE (DECREASE) in cash and cash equivalents (a+b+c+d)	40,724	350,062	(9,587)	12,531
CASH AND CASH EQUIVALENTS AT JULY 1, 20xx	92,356	133,080	233,142	483,142
CASH AND CASH EQUIVALENTS AT JUNE 30, 20xx	133,080	483,142	223,555	495,673

PROPRIETARY FUND	(1) ACTUAL PRIOR YEAR ENDING 6/30/2022	(2) ESTIMATED CURRENT YEAR ENDING 6/30/2023	(3) BUDGET YEAR TENTATIVE APPROVED	(4) ENDING 06/30/24 FINAL APPROVED
OPERATING REVENUE				
Charges for Services				
Landfill Fees	698,678	570,000	570,000	570,000
Landfill Fees - Caliente Contract	-	65,000	65,000	65,000
Landfill Fees - Mesquite Contract	-	30,000	30,000	15,000
Total Operating Revenue	698,678	665,000	665,000	650,000
OPERATING EXPENSE				
Sanitation				
Salaries and Wages	282,169	313,722	320,887	320,887
Employee Benefits	105,870	118,876	150,749	151,482
Services and Supplies	162,757	180,000	190,000	224,000
Closure and Post-closure costs	20,000	-	-	-
Subtotal	570,796	612,598	661,636	696,369
Depreciation/amortization	111,766	150,000	150,000	150,000
Total Operating Expense	682,562	762,598	811,636	846,369
Operating Income or (Loss)	16,116	(97,598)	(146,636)	(196,369)
NONOPERATING REVENUES				
Special assessment - debt	40,588	40,000	40,000	40,000
Grant Proceeds -LATCF	-	-	-	170,000
Total Nonoperating Revenues	40,588	40,000	40,000	210,000
NONOPERATING EXPENSES				
Interest Expense	14,292	19,715	16,628	33,500
Total Nonoperating Expenses	14,292	19,715	16,628	33,500
Net Income before Operating Transfers	42,412	(77,313)	(123,264)	(19,869)
Operating Transfers (Schedule T)				
In	-	-	-	-
Out	20,000	20,000	20,000	20,000
Net Operating Transfers	(20,000)	(20,000)	(20,000)	(20,000)
NET INCOME/(LOSS)	22,412	(97,313)	(143,264)	(39,869)

PROPRIETARY FUND	(1) ACTUAL PRIOR YEAR ENDING 6/30/2022	(2) ESTIMATED CURRENT YEAR ENDING 6/30/2023	(3) BUDGET YEAR TENTATIVE APPROVED	(4) ENDING 06/30/24 FINAL APPROVED
A. CASH FLOWS FROM OPERATING ACTIVITIES:				
Revenue	687,934	665,000	665,000	650,000
Expenses	(571,436)	(612,598)	(661,636)	(696,369)
a. Net cash provided by (or used for) operating activities	116,498	52,402	3,364	(46,369)
B. CASH FLOWS FROM NONCAPITAL FINANCING ACTIVITIES:				
Operating Transfers In/out	(20,000)	(20,000)	(20,000)	(20,000)
Grant Proceeds LATCF	-	-	-	170,000
b. Net cash provided by (or used for) noncapital financing activities	(20,000)	(20,000)	(20,000)	150,000
C. CASH FLOWS FROM CAPITAL AND RELATED FINANCING ACTIVITIES:				
Proceeds of loans for equipment	187,203	-	560,000	350,000
Purchase of capital assets	(240,645)	(60,000)	(588,500)	(588,500)
Principal Payments	(80,219)	(149,694)	(208,781)	(147,957)
Interest Payments	(15,485)	(19,715)	(16,628)	(33,500)
Special Assessment Revenue	40,588	40,000	40,000	40,000
Financed Purchases Payable	(41,206)	-	-	-
c. Net cash provided by (or used for) capital and related financing activities	(149,764)	(189,409)	(213,909)	(379,957)
D. CASH FLOWS FROM INVESTING ACTIVITIES:				
d. Net cash provided by (or used in) investing activities	-	-	-	-
NET INCREASE (DECREASE) in cash and cash equivalents (a+b+c+d)	(53,266)	(157,007)	(230,545)	(276,326)
CASH AND CASH EQUIVALENTS AT JULY 1, 20xx	563,387	510,121	238,114	353,114
CASH AND CASH EQUIVALENTS AT JUNE 30, 20xx	510,121	353,114	7,569	76,788

PROPRIETARY FUND	(1) ACTUAL PRIOR YEAR ENDING 6/30/2022	(2) ESTIMATED CURRENT YEAR ENDING 6/30/2023	(3) BUDGET YEAR TENTATIVE APPROVED	(4) ENDING 06/30/24 FINAL APPROVED
OPERATING REVENUE				
Charges for Services				
Landfill Fees	-	-	-	-
Total Operating Revenue	-	-	-	-
OPERATING EXPENSE				
Sanitation				
Services and Supplies	-	-	-	-
Depreciation/amortization	-	-	-	-
Total Operating Expense	-	-	-	-
Operating Income or (Loss)	-	-	-	-
NONOPERATING REVENUES				
Investment income	(1,707)	-	-	-
Total Nonoperating Revenues	(1,707)	-	-	-
NONOPERATING EXPENSES				
Interest Expense	-	-	-	-
Total Nonoperating Expenses	-	-	-	-
Net Income before Operating Transfers	(1,707)	-	-	-
Operating Transfers (Schedule T)				
In	20,000	20,000	20,000	20,000
Out	-	-	-	-
Net Operating Transfers	20,000	20,000	20,000	20,000
NET INCOME/(LOSS)	18,293	20,000	20,000	20,000

PROPRIETARY FUND	(1) ACTUAL PRIOR YEAR ENDING 6/30/2022	(2) ESTIMATED CURRENT YEAR ENDING 6/30/2023	(3) BUDGET YEAR TENTATIVE APPROVED	(4) ENDING 06/30/24 FINAL APPROVED
A. CASH FLOWS FROM OPERATING ACTIVITIES:				
Revenue	-	-	-	-
Expenses	-	-	-	-
a. Net cash provided by (or used for) operating activities	-	-	-	-
B. CASH FLOWS FROM NONCAPITAL FINANCING ACTIVITIES:				
Transfer in/out	20,000	20,000	20,000	20,000
b. Net cash provided by (or used for) noncapital financing activities	20,000	20,000	20,000	20,000
C. CASH FLOWS FROM CAPITAL AND RELATED FINANCING ACTIVITIES:				
Purchase of capital assets	-	-	-	-
c. Net cash provided by (or used for) capital and related financing activities	-	-	-	-
D. CASH FLOWS FROM INVESTING ACTIVITIES:				
Rent	-	-	-	-
Interest income (loss)	(1,796)	-	-	-
d. Net cash provided by (or used in) investing activities	(1,796)	-	-	-
NET INCREASE (DECREASE) in cash and cash equivalents (a+b+c+d)	18,204	20,000	20,000	20,000
CASH AND CASH EQUIVALENTS AT JULY 1, 20xx	93,447	111,651	131,651	131,651
CASH AND CASH EQUIVALENTS AT JUNE 30, 20xx	111,651	131,651	151,651	151,651

ALL EXISTING OR PROPOSED
GENERAL OBLIGATION BONDS, REVENUE BONDS,
MEDIUM-TERM FINANCING, CAPITAL LEASES AND
SPECIAL ASSESSMENT BONDS

* - Type
1-General Obligation Bonds
2-G.O. Revenue Supported Bonds
3-G.O. Special Assessment Bonds
4-Revenue Bonds
5-Medium-Term Financing

6-Medium-Term Financing - Lease Purchases
7-Capital Leases
8-Special Assessment Bonds
9-Mortgages
10-Other (Specify Type)
11-Proposed (Specify Type)

(1) NAME OF BOND OR LOAN List and Subtotal By Fund	(2) *	(3) TERM	(4) ORIGINAL AMOUNT OF ISSUE	(5) ISSUE DATE	(6) PAYMENT DATE	(7) INTEREST RATE	(8) BEGINNING OUTSTANDING BALANCE 7/1/2023	(9) REQUIREMENTS FOR FISCAL YEAR ENDING 06/30/24 INTEREST PAYABLE	(10) PRINCIPAL PAYABLE	(11) (9)+(10) TOTAL
FUND										
Vehicle Capital Projects Fund										
Sheriff Vehicles (3)	6	3	$ 107,158	6/10/2022	6/10/2024	7.23%	$ 35,661	$ 2,577	$ 35,661	$ 38,238
Sheriff Vehicles (1)	6	3	$ 35,086	7/10/2022	7/10/2024	6.69%	$ 11,679	$ 782	$ 11,679	$ 12,461
Sheriff Vehicles (3)	11	3	$ 150,000	7/1/2023		5.00%	$ 150,000	$ 6,421	$ 47,527	$ 53,948
Subtotal Vehicle Cap Proj			$ 292,244				$ 197,340	$ 9,780	$ 94,867	$ 104,647
Solid Waste Enterprise Fund										
Disposal site equipment (interfund loan)	5	10	$ 400,000	10/1/2016	10/1/2026	0.00%	$ 220,000	$ -	$ 40,000	$ 40,000
Roll-off truck (interfund loan)	5	10	$ 179,738	12/31/2019	12/31/2028	4.00%	$ 113,630	$ 4,537	$ 18,272	$ 22,809
Front load truck (interfund loan)	5	10	$ 266,802	7/1/2020	7/1/2029	2.00%	$ 191,662	$ 7,666	$ 25,228	$ 32,894
Roll-Off Truck	6	5	$ 187,203	6/6/2022	6/6/2026	4.90%	$ 110,630	$ 4,425	$ 36,781	$ 41,206
Equipment (interfund loan)	11	10	$ 350,000	7/1/2023	7/1/2033	5.00%	$ 350,000	$ 16,872	$ 27,676	$ 44,548
Subtotal Solid Waste			$ 1,383,743				$ 985,922	$ 33,500	$ 147,957	$ 181,457
TOTAL ALL DEBT SERVICE			$ 1,675,987				$ 1,183,262	$ 43,280	$ 242,824	$ 286,104

SCHEDULE C-1 - INDEBTEDNESS

Lincoln County
(Local Government)

Budget Fiscal Year 2023-2024

Transfer Schedule for Fiscal Year 2023-2024

	TRANSFERS IN			TRANSFERS OUT		
FUND TYPE	FROM FUND	PAGE	AMOUNT	TO FUND	PAGE	AMOUNT
GENERAL FUND						
General Fund				Special Projects	28	250,000
General Fund				Library	28	20,000
General Fund				Vehicle Capital Projects	28	20,442
General Fund				Detention Center Enterprise Fund	28	685,000
SUBTOTAL			-			975,442
SPECIAL REVENUE FUNDS						
Library	General Fund	45	20,000			
Special Projects	General Fund	81	250,000			
Flood Control	Federal In Lieu	29	80,000			
Property Management	Federal In Lieu	80	50,000			
Fair Board	Room Tax	43	10,000			
District Court	County Indigent	77	15,000			
Planning	Federal In Lieu	75	77,000			
Special Projects	Federal In Lieu	81	50,000			
Room Tax			.	Fair Board	47	10,000
Federal In Lieu				Flood Control	34	80,000
Federal In Lieu				Property Management	34	50,000
Fair Board				Fair Board Capital Projects	43	5,000
County Indigent				District Court	40	15,000
Federal In Lieu				Planning	34	77,000
Federal In Lieu				Special Projects	34	50,000
SUBTOTAL			552,000			287,000

Transfer Schedule for Fiscal Year 2023-2024

	TRANSFERS IN			TRANSFERS OUT		
FUND TYPE	FROM FUND	PAGE	AMOUNT	TO FUND	PAGE	AMOUNT
CAPITAL PROJECTS FUND						
Vehicle Capital Projects	Capital Improvements	87	111,558			
Fair Board Capital Projects	Fair Board	88	5,000			
Capital Improvements				Vehicle Capital Projects	85	111,558
Vehicle Capital Projects	General Fund	87	20,442			
SUBTOTAL			137,000			111,558
EXPENDABLE TRUST FUNDS						
SUBTOTAL			-			-
DEBT SERVICE						
SUBTOTAL			-			-

Lincoln County

(Local Government)

SCHEDULE T - TRANSFER RECONCILIATION

Transfer Schedule for Fiscal Year 2023-2024

	TRANSFERS IN			TRANSFERS OUT		
FUND TYPE	FROM FUND	PAGE	AMOUNT	TO FUND	PAGE	AMOUNT
ENTERPRISE FUNDS						
Landfill	Solid Waste	102	20,000			
Solid Waste				Landfill	100	20,000
Detention Center	General Fund	98	685,000			
SUBTOTAL			705,000			20,000
INTERNAL SERVICE						
SUBTOTAL			-			-
RESIDUAL EQUITY TRANSFERS						
SUBTOTAL						
TOTAL TRANSFERS			1,394,000			1,394,000

SCHEDULE OF EXISTING CONTRACTS
Budget Year 2023-2024

Local Government: Lincoln County, Nevada
Contact: Amy Elmer
E-mail Address: Aelmer@lincolnnv.com
Daytime Telephone: 775-962-8042

Total Number of Existing Contracts: 50

Line	Vendor	Effective Date of Contract	Termination Date of Contract	Proposed Expenditure FY 2023-24	Proposed Expenditure FY 2024-25	Reason or need for contract:
1	Xtreme Technologies, LLC	7/1/2022	6/30/2023	$ -		Technology services
2	Basin Engineering	7/1/2022	6/30/2023	per claim	per claim	Mapping services ($7 per claim)
3	Basin Engineering	7/1/2022	6/30/2023	-		County surveyor
4	JC Enterprise	7/1/2022	6/30/2023	-		Web site design & maintenance
5	Rebel Communications	7/1/2022	6/30/2023	-		Communications
6	Grover C. Dils Medical Center	7/1/2022	6/30/2023	-		Healthcare for Detention Center
7	Vanguard Pest & Weed Control	7/1/2022	6/30/2023	-		Pest and weed control
8	Les Olson Company	1/16/2022	1/15/2023	-		Maintenance for copy machine
9	NV Division of Health & Welfare	7/1/2022	6/30/2023	-		Public nurse
10	NV Dept. of Health & Human Services	7/1/2022	6/30/2023	-		Required by State
11	NV Division of Parole & Probation	7/1/2022	6/30/2023	-		Required by State
12	NV Division of Child & Family Services	7/1/2022	6/30/2023	-		Required by State
13	NV Division of Child & Family Services	7/1/2022	6/30/2023	-		Required by State
14	NV State Health Inspectors	7/1/2022	6/30/2023	-		Required by State
15	Lexis Nexis	1/1/2022	1/1/2023	-		Legal services and online support
16	CourtView	7/1/2022	6/30/2023	-		Court case management system
17	Franklin Katschke & Kristie Pickering	7/1/2022	6/30/2023	-		Public defender
18	Lexis Nexis - research	7/1/2022	6/30/2023	-		Legal research
19	Lexis Nexis - Microsoft	7/1/2022	6/30/2023	-		Compatibility with Microsoft Office
	Subtotal (page 1 of 3)			$ -	$ -	

Additional Explanations (Reference Line Number and Vendor):

SCHEDULE OF EXISTING CONTRACTS
Budget Year 2023-2024

Local Government: Lincoln County, Nevada
Contact: Amy Elmer
E-mail Address: Aelmer@lincolnnv.com
Daytime Telephone: 775-962-8042

Total Number of Existing Contracts: 50

Line	Vendor	Effective Date of Contract	Termination Date of Contract	Proposed Expenditure FY 2023-24	Proposed Expenditure FY 2024-25	Reason or need for contract:
20	CLAN	7/1/2022	6/30/2023	-		Library network dues
21	NV Division of Forestry	7/1/2022	6/30/2023	-		Crew work services
22	National Meter	7/1/2022	6/30/2023	-		Annual support MVRS software
23	Continental Utility	7/1/2022	6/30/2023	-		Annual maintenance / support billing software
24	NV Division of Health	7/1/2022	6/30/2023	-		Bathing permit - pool
25	NV Division of Health	7/1/2022	6/30/2023	-		Permit fees - RV park
26	NV Division of Environmental Protection	7/1/2022	6/30/2023	-		Sewer permit fees
27	Itron	7/1/2022	6/30/2023	-		Maintenance support radio read handheld
28	Daniel C. McArthur, Ltd.	7/1/2022	6/30/2023	-		Auditor
29	NV Drug & Alcohol Testing	7/1/2022	6/30/2023	-		Random testing
30	Pitney Bowes Global	7/1/2022	6/30/2023	-		Postage equipment lease
31	USPS	7/1/2022	6/30/2023	-		Post office box lease
32	Energy Communities Alliance	7/1/2022	6/30/2023	-		Membership dues
33	Lincoln County Library	7/1/2022	6/30/2023	-		Public info. site space rental
34	Mountain Alarm/FPS	7/1/2022	6/30/2023	-		Fire monitoring for Panaca Town Center
35	Bank of America Merchant Services	1/13/2022	1/13/2023	-		credit card processing
36	Sinnett Consulting Services	7/1/2022	6/30/2023	-		Drug testing consortium
37	NV State Fire Marshalls	7/1/2022	6/30/2023	-		Hazmat permits for fueling stations
38	Dolan & Edwards	7/1/2022	6/30/2023	-		Insurance
	Subtotal (page 2 of 3)			$ -	$ -	

Additional Explanations (Reference Line Number and Vendor):

SCHEDULE OF EXISTING CONTRACTS
Budget Year 2023-2024

Local Government: Lincoln County, Nevada
Contact: Amy Elmer
E-mail Address: Aelmer@lincolnnv.com
Daytime Telephone: 775-962-8042

Total Number of Existing Contracts: 50

Line	Vendor	Effective Date of Contract	Termination Date of Contract	Proposed Expenditure FY 2023-24	Proposed Expenditure FY 2024-25	Reason or need for contract:
39	Dolan & Edwards	7/1/2022	6/30/2023			Insurance
40	ESRI Inc	7/1/2022	6/30/2023			ARC GIS Maintenance Fee
41	Caselle Software	12/19/2022	12/19/2023			Financial Software
42	Recology Environmental Solutions	7/1/2022	6/30/2023			Enterprise fee
43	Ken Dixon	7/1/2022	6/30/2023			Predisaster mitigation
44	Louise Boettner	7/1/2022	6/30/2023			Health officer
45	Devnet Software	7/1/2022	7/1/2023			Software
47	Motorola Solutions	n/a				Spillman Usage/Maintenance
48	Summit Fire Protection	n/a				Fire & sprinkler inspections
49	Red Hat Gout at Caronsoft	8/30/2020	10/19/2021			IT
50	Eagle View Pictometry	7/1/2022	6/30/2023			Imagery
	Total Proposed Expenditures			$ -	$ -	

Additional Explanations (Reference Line Number and Vendor):

SCHEDULE OF PRIVATIZATION CONTRACTS
Budget Year 2023-2024

Local Government: Lincoln County, Nevada
Contact: Amy Elmer
E-mail Address: Aelmer@lincolnnv.com
Daytime Telephone: 775-962-8042

Total Number of Privatization Contracts: 4

Line	Vendor	Effective Date of Contract	Termination Date of Contract	Duration (Months/ Years)	Proposed Expenditure FY 2023-24	Proposed Expenditure FY 2024-25	Position Class or Grade	Number of FTEs employed by Position Class or Grade	Equivalent hourly wage of FTEs by Position Class or Grade	Reason or need for contract:
1	Connie West	7/1/2022	6/30/2023	1 year	-					Custodian - Rachel
2	Carling Law Offices	7/1/2022	6/30/2023	1 year	-					Public Administrator cases
3	Mark Wilbur	7/1/2022	6/30/2023	1 year						Detention Medical
4	Sheila Willingham	7/1/2022	6/30/2023	1 year						Detention Medical
5										
6										
7										
8										
9										
	Total				$ -	$ -				

Attach additional sheets if necessary.

To: Board of Directors of the Nevada State Infrastructure Bank
From: Erik Jimenez, Secretary to the Board of Directors
Date: October 18, 2023
Re: Nevada Facilities Fund Staff Report

Pursuant to the Regulation LCB File No. R017-22, which governing the Nevada State Infrastructure Bank (the "Bank"), staff has prepared the following report on Opportunity 180's request for a loan from the Bank to establish the proposed Nevada Facilities Fund, along with a recommendation for the Board of Directors' consideration.

- **Applicant:** Opportunity 180 in partnership with the Equitable Facilities Fund
- **Project:** The Nevada Facilities Fund
- **Lender:** Nevada State Infrastructure Bank
- **Amount Requested:** $15,000,000 from the Bank's Charter School Capital Needs Revolving Account

Project Overview: Opportunity 180 (the "Applicant"), an education-focused non-profit organization based in Las Vegas, Nevada, is requesting $15,000,000 from the Bank's Charter School Capital Needs Revolving Account, to establish the Nevada Facilities Fund ("NVFF") in partnership with the Equitable Facilities Fund, which is a non-profit social impact fund that provides low-cost, long-term financing to charter school operators.

Pursuant to NRS 408.55063, a qualified borrower that is eligible to receive a loan or other financial assistance from the Bank is defined as "a governmental unit, an Indian reservation or Indian colony or a private nonprofit entity created for charitable or educational purposes."

As expressed in the financing application submitted to the Bank, the Applicant is a Nevada 501(c)3 organization that is *"dedicated to ensuring that every child has access to a high-quality public school that puts them on track to be college and career ready."*

The NVFF will function as a revolving credit facility designed to substantially reduce financing expenses for high-quality public charter schools and create educational opportunities in low-income communities.

The Applicant proposes utilizing the Bank's $15,000,000 as leverage for an additional $85,000,000 of private philanthropy and tax-exempt bond financing. This funding will establish a $100,000,000 revolving loan fund intended to support 7,500 additional student seats in high-quality public charter schools located in communities with the greatest level of need.

Approximately 70% of students attending schools supported by NVFF will identify as people of color and approximately 70% will qualify for free or reduced-price lunch.

The Applicant intends to repay the Bank's $15,000,000 loan with funds that are generated from payments from charter school operators that receive loans from NVFF. All administration of

future loans, including loan sourcing, underwriting, approval, closing, and servicing processing will be performed by Applicant (directly or through their partner, the Equitable Facilities Fund).

Background: On August 26, 2022, the Applicant submitted a financing application to the Bank requesting a loan of $15,000,000 to establish the NVFF ("the Project").

Upon receipt of the application for financing, Bank staff began the due diligence process to examine the proposal for project eligibility, borrower qualification, and financial viability pursuant to the Bank's governing statutes and regulations.

Following review, Bank staff determined that the Applicant's proposal met the statutory definition of an eligible project, i.e., the Applicant could be a qualified borrower of the Bank. Further the proposed NVFF project met the initial statutory eligibility requirements to be considered for funding from the Board of Directors as a qualified project of the Bank as defined under NRS 408.55064. Therefore, the Project was brought to the Board of Directors for its consideration on October 10, 2022.

During this meeting, the Board of Directors conditionally approved the eligibility of the Project along with a proposed term sheet to establish the NVFF subject to the following conditions:

1) The completion of a full regulatory review by Bank staff of the Project; and
2) Approval of the final contract terms for the Project by the Board of Directors.

Additionally, Bank staff was directed by the Board of Directors to proceed with the regulatory review of all regulation requirements (i.e., staff reports, credit analysis, and a financing agreement) the Project is subject to, and to negotiate the final contract terms for the Board's consideration before potential final approval.

General Requirements: Pursuant to the Bank's regulation, LCB File No. R017-22, for each application for a loan or other financial assistance that is submitted to the Bank, staff is required to:

1) *Review the application for completeness, including, without limitation, any attachments, or exhibits;*
2) *Confirm that the governing body of the applicant has approved the application; and*
3) *Confirm that the applicant is a qualified borrower, and the project is an eligible project;*

After initially submitting a financing application to the Bank on August 26, 2022, the Applicant provided Bank staff with updated documents to include its 2022 audited financial statement, along with its most recent federal Internal Revenue Service Form 990 for the year 2022 on June 26, 2023. The financing application along with all documents submitted to the Bank by the Applicant can be found in Exhibit D.

After reviewing the financing application submitted by the Applicant along with the most recent financials that have been received, Bank staff has determined that the application is complete, and that the Applicant's governing board has approved its application.

Additionally, staff has determined through its analysis along with the Board of Directors' pre-conditional approval for the NVFF on October 10, 2022, that the Applicant is a qualified borrower and the NVFF is a qualified project. This analysis that was approved by the Board of Directors can be found in Exhibit D of this report.

Repayment Structure, Financing and Credit Analysis: In addition to the above General Requirements set forth in LCB File No. R017-22, Bank staff also undergoes the following steps when reviewing financing applications:

1) *Confirm that the proposed source of repayment is appropriate for the loan or other financial assistance from the Bank and that the applicant has the ability to repay the loan or other financial assistance from the proposed source of repayment;*
2) *Determine the impact of the loan or other financial assistance on the finances and operations of the applicant;*
3) *Determine whether the applicant has unmet capital needs that could be detrimentally affected by the loan or other financial assistance or that could detrimentally affect the ability of the applicant to repay the loan or other financial assistance;*
4) *Review the audited financial statements of the applicant for the immediately preceding 5 years or, if the applicant is a new entity with less than 5 years of financial statements, review the existing audited financial statements and a feasibility study for the eligible project provided by the applicant;*
5) *Conduct a financial analysis of the applicant's general credit, including, without limitation:*
    a) *An analysis of the financial statements of the applicant using criteria appropriate for an analysis of municipal credits or private credits, as applicable;*
    b) *A review of any official statements or prospectus used by the applicant in conjunction with the issuance of bonds;*
    c) *Conducting discussions with the financial advisor and underwriter of the applicant to assist in evaluating the applicant's financial condition;*
    d) *A review of reports of bond rating agencies, where applicable;*
    e) *For applicants who are governmental units, a review of existing property tax rates and general obligation bonding capacity; (Not applicable)*
    f) *An analysis of the existing indebtedness of the applicant, both secured and unsecured; and*
    g) *An analysis of cash flow projections;*
6) *Examine population trends;*
7) *Examine assessed value trends;*
8) *Evaluate the relevant legal authority applicable to the applicant, including, without limitation, state law, federal tax law and local ordinances and resolutions;*

9) *Evaluate the extent to which the management of the applicant understands the obligations, terms and conditions of the loans and other financial assistance provided by the Bank; and*
10) *Determine the readiness of the management of the applicant to assume responsibility for the timely repayment of the loan or other financial assistance.*

Each of these items is addressed below:

1. ***Confirm that the proposed source of repayment is appropriate for the loan or other financial assistance from the Bank and that the applicant has the ability to repay the loan or other financial assistance from the proposed source of repayment.***

In the financing application for the NVFF, the Applicant proposes to repay the Bank through loan repayments from charter school borrowers who, in turn, borrow from the Fund.

Exhibit A includes a detailed model for expected cash flows for the NVFF from 2023 – 2042.

If the Board of Directors elects to approve the loan for the Project, the Applicant and the Equitable Facilities Fund ("EFF") will deposit Bank Funds of $15,000,000 into the NVFF, along with an additional $5,350,000 in philanthropic capital that has already been raised by local Nevada donors. Additionally, the Applicant will be required to repay a $150,000 Loan Origination Fee to the Bank at the time of closing.

Tax exempt bonds will then be issued by EFF and the bond proceeds will be deposited within the NVFF. The expected bond proceeds to be deposited within the fund are as follows:

2023: $16,480,000

2024: $17,149,536

2025: $17,856,128

2026: $18,590,923

2027: $19,355,075

With these proceeds deposited, cumulative capital sources for the NVFF (inclusive of funds from the State Infrastructure Bank, philanthropic contributions from the Applicant and EFF, and tax-exempt bonding) would equal:

2023: $36,830,000

2024: $54,074,028

2025: $72,281,034

2026: $91,488,370

2027: $111,736,304

Since the objective of the NVFF is to provide the lowest cost capital available to charter school operators, Bank staff is recommending the minimum level of annualized payments required under the Bank's regulation, with a balloon payment equal to the principal and accrued interest to be due at the maturity date.

For the 20-year term on the proposed $15,000,000 loan, the Bank can expect to earn $4,500,000 in accrued interest upon maturity.

The Applicant will repay the Bank through annual interest-only payments of 0.01% of the outstanding loan balance until maturity. These annual interest-only payments would equal $1,500 per year, or $28,500 over 19 years. In year 20, the Bank would receive a lump sum payment of all remaining principal and accrued interest, which would equal $19,471,500.

The Applicant and EFF anticipate that the NVFF will fund approximately two charter school projects per year, with the initial loans to charter schools being $10,300,000 each for 2023. Project costs are expected to increase over time.

Given the structure of the fund, coupled with the expected issuance timeline for charter school loans offered by the NVFF, Bank staff is confident that the revenues received by the NVFF would be sufficient to cover the interest only payments of 0.01% for 19 years and could also cover the balloon payment in year 20. Once the loan and any accumulated interest would be paid in full, the expected end of year balance of the NVFF in 2042 would be $6,204,467. This remaining balance of the NVFF would allow additional loans to charter schools to continue to be made once all Bank funds are repaid.

2. ***Determine the impact of the loan or other financial assistance on the finances and operations of the applicant.***

As is illustrated in Exhibit A, upon the establishment of the NVFF and the issuance of its initial loans, repayments from charter school operators would immediately start being deposited within the Fund. The chart below, shows the expected inflows (loan repayments) and outflows (debt service, operating expenses) of funds within the NVFF, as well as the expected annual surplus.

Year	Loan Repayments Inflow	Bond Debt Service (Outflow)	Operating Expenses (Outflow)	Annual Surplus Net Cash
2023	647,292	(491,090)	(61,310)	94,892
2024	1,967,769	(1,493,220)	(124,071)	350,478

2025	3,341,065	(2,536,358)	(188,293)	616,414
2026	4,769,292	(3,622,448)	(253,985)	892,859
2027	6,254,649	(4,753,206)	(321,155)	1,180,288
2028	7,011,890	(5,329,970)	(50,000)	1,631,919
2029	7,011,890	(5,329,970)	(51,000)	1,630,919
2030	7,011,890	(5,329,970)	(52,020)	1,629,899
2031	7,011,890	(5,329,970)	(53,060)	1,628,859
2032	7,011,890	(5,329,970)	(54,122)	1,627,798
2033	7,011,890	(5,329,970)	(55,204)	1,626,715
2034	7,011,890	(5,329,970)	(56,308)	1,625,611
2035	7,011,890	(5,329,970)	(57,434)	1,624,485
2036	7,011,890	(5,329,970)	(58,583)	1,623,336
2037	7,011,890	(5,329,970)	(59,755)	1,622,165
2038	7,011,890	(5,329,970)	(60,950)	1,620,970
2039	7,011,890	(5,329,970)	(62,169)	1,619,751
2040	7,011,890	(5,329,970)	(63,412)	1,618,507
2041	7,011,890	(5,329,970)	(64,680)	1,617,239
2042	7,011,890	(5,329,970)	(65,974)	1,615,945

As shown in this chart, the annual operating expenses for the NVFF begin at $61,310 and increase before reaching a peak of $321,155 in 2027 at the height of new loans from the NVFF being issued. After this occurs, the annual operating expenses normalize to a range of $50,000 - $65,974 over the remaining 20-years of the NVFF's loan term with the Bank.

The Applicant has stated that all of the administrative expenses listed in Exhibit A and the above chart will go towards covering EFF's overhead costs for administering the individual loans within the NVFF portfolio. As a result, the Applicant will experience an increased workload from the time of closing of the Bank's loan through 2027 as it vets charter school operators for participation within the Fund. After 2027, the NVFF is projected to cease making additional loans, and EFF will perform the majority of work as it services the outstanding loans.

The applicant will not see an increase on its balance sheet except temporarily, upon the receipt of initial funding from the Bank. The Bank's loan, private philanthropic dollars raised by the applicant, and bond proceeds will all be placed in the NVFF.

Bank staff has discussed this increased workload that can be expected as the NVFF begins to issue loans, and the Applicant fully understands that it will need to perform these operational tasks without any additional compensation from the NVFF.

3. ***Determine whether the applicant has unmet capital needs that could be detrimentally affected by the loan or other financial assistance or that could detrimentally affect the ability of the applicant to repay the loan or other financial assistance.***

Through an analysis of the Applicant's current operating budget, preceding 5 years of audited financial statements, and the Applicant's Form 990's from 2018, 2019, 2021, and 2022, Bank staff has not identified any unmet capital needs of the organization that would be detrimentally affected by taking on this loan from the Bank.

It should be noted that the Applicant does have an operating lease for office space, which expires in January 2025. As of June 30, 2022, the total future minimum lease payments are as follows:

2023	$33,493
2024	$34,559
2025	$17,324
Total Outstanding	$85,376

Since the Applicant appears to be in the financial position to continue making these future lease payments, Bank staff does not view this operating lease as a significant factor that would limit the Applicant's ability to make scheduled loan repayments through this project.

Bank staff has not identified any additional unmet capital needs that would detrimentally affect the Applicant's ability to repay the loan over the proposed 20-year period.

4. ***Review the audited financial statements of the applicant for the immediately preceding 5 years or, if the applicant is a new entity with less than 5 years of financial statements, review the existing audited financial statements and a feasibility study for the eligible project provided by the applicant.***

Bank staff has reviewed the Applicant's audited financial statements that were prepared by Houldsworth, Russo & Company for all five of its most independent financial audits. Additionally, Bank staff has verified with Houldsworth, Russo & Company that these audit reports provided by the applicant were accurate.

The dates of the audit reports provided by the Applicant were:

- December 31, 2017;
- December 31, 2018;
- June 30, 2020;
- June 30, 2021; and
- June 30, 2022.

Staff would note that the Applicant switched from a January – December fiscal year to a July – June fiscal year in 2019; therefore, the relevant 2019 financials are also included within the June 30, 2020, audited financial report.

In every audit, Houldsworth, Russo & Company indicated that the Applicant's financial statements were presented fairly in all material respects.

Additionally, Houldsworth, Russo & Company also noted that at for each accounting period, the Applicant's changes in net assets and cash flows consistently ended in conformity with accounting principles generally accepted in the United States of America.

Based on these audited financial statements, coupled with the review of the Applicant's financial position since 2017, Bank staff feels comfortable of the Applicant's ability to undertake this proposed loan from the Bank.

5. Conduct a financial analysis of the applicant's general credit, including, without limitation:

a. An analysis of the financial statements of the applicant using criteria appropriate for an analysis of municipal credits or private credits, as applicable;

Using the audited financial statements provided by the Applicant covering the years 2017, 2018, 2019, 2020, 2021, and 2022; Bank staff has examined Applicant's total financial condition through its total assets and liabilities. These are reflected in the table below.

Staff would note that the applicant moved from a January 1 – December 31 fiscal calendar to a July 1 – June 30 fiscal calendar in 2020, so the audited financial statement from 2020 covers an 18-month period from January 1, 2019 – June 30, 2020.

Year	Total Assets	Total Liabilities	Net Assets
2017	$3,962,198	$22,516	$3,939,682
2018	$11,908,164	$53,770	$11,854,394
2020 (covers 18-month period)	$5,480,190	$2,054,219	$3,425,971
2021	$15,615,978	$2,202,282	$13,413,696
2022	$19,995,394	$868,695	$19,126,699

Since 2017, the Applicant has consistently shown that it begins and ends each fiscal year in a reasonable financial position.

Through analyzing the Applicant's audited financial statements and Form 990's from 2017, 2018, 2019, 2020, 2021, and 2022; Bank staff has not identified any liabilities, accounting procedures, or other factors that would pose a credit risk to the Bank thereby limiting the Applicant's ability to repay this loan.

b. A review of any official statements or prospectus used by the applicant in conjunction with the issuance of bonds;

While the Applicant will be the qualified borrower for this project, the proposed structure of the NVFF would operate as partnership with the Applicant and EFF, which operates the Equitable School Revolving Fund ("ESRF").

Through this structure, funds which are deposited with the NVFF would live on the balance sheet for the ESRF.

Being that the Applicant does not directly issue bonds, Bank staff has reviewed a series of official statements for the ESRF that have been published for the issuance of various series of bonds issued through the Arizona Industrial Development Authority, the California Infrastructure and Economic Development Bank, the Massachusetts Development Finance Agency, and the City of Albany Capital Resource Corp., N.Y.

These official statements include the following:

- August 2019: National Charter School Revolving Loan Fund Revenue Bonds, Series 2019 A and B;
- August 2020: National Charter School Revolving Loan Fund Revenue Bonds, Series 2020 A and B;
- October 2021: National Charter School Revolving Loan Fund Revenue Bonds, Series 2021 A, B, C, and D; and
- August 2022: National Charter School Revolving Loan Fund Revenue Bonds, Series 2022 A and B.

The official statement published on August 28, 2019, related to the issuance of $111,725,000 in National Charter School Revolving Loan Fund Revenue Bonds through the following series:

- Series 2019A: Arizona Industrial Development Authority - $92,715,000
- Series 2019B: California Infrastructure and Economic Development Bank- $19,010,000

The official statement published on August 21, 2020, related to the issuance of $170,825,000 in National Charter School Revolving Loan Fund Revenue Bonds through the following series:

- Series 2020A (Social Bonds): Arizona Industrial Development Authority - $122,710,000
- Series 2020B (Social Bonds): California Infrastructure and Economic Development Bank - $48,115,000

The official statement published on October 6, 2021, related to the issuance of $217,815,000 in National Charter School Revolving Loan Fund Revenue Bonds through the following series:

- Series 2021A (Social Bonds): Arizona Industrial Development Authority Senior National Charter School Revolving Loan Fund Revenue Bonds- $122,895,000
- Series 2021 (Social Bonds): Arizona Industrial Development Authority Subordinate National Charter School Revolving Loan Fund Revenue Bonds- $21,325,000
- Series 2021B (Social Bonds): California Infrastructure and Economic Development Bank - $30,650,000
- Series 2021C (Social Bonds): Massachusetts Development Finance Agency - $17,925,000
- Series 2021D (Social Bonds): City of Albany Capital Resource Corporation - $25,020,000

The official statement published on October 6, 2021, related to the issuance of $219,410,000 in National Charter School Revolving Loan Fund Revenue Bonds through the following series:

- Series 2020A (Social Bonds): Arizona Industrial Development Authority - $153,525,000
- Series 2020B (Social Bonds): California Infrastructure and Economic Development Bank - $65,885,000.

Through a review of these official statements, Bank staff has determined that the ESRF continues to provide low-cost financing to charter schools across the country that serve diverse student populations, while also making all required to bond holders.

Similarly, staff would note that the ESRF's continued issuance of self-designated "Social Bonds" would pair well with the intended uses for the Bank's allocation $15 million to support charter schools in low-income communities as noted in its 2021 Series B (Social Bond) issuance.

c. Conducting discussions with the financial advisor and underwriter of the applicant to assist in evaluating the applicant's financial condition;

Since the financing application was submitted by the Applicant, Bank staff has engaged in numerous discussions with the Applicant, EFF, and various financial advisors for the State Treasurer's Office to better understand the financial condition of the Applicant.

Through these discussions, alongside Bank staff's thorough review of the Applicant's financial statements, there have been no concerns to date as to the financial condition of the Applicant that would impact staff's recommendation to the Board of Directors for this proposed loan from the Bank.

d. A review of reports of bond rating agencies, where applicable;

While the Applicant will be the qualified borrower for this project, the proposed structure of the NVFF would operate as partnership with the Applicant and EFF, which operates the ESRF. Through this structure, funds which are deposited with the NVFF would live on the balance sheet for the ESRF.

For clarity, a diagram of the proposed structure of the NVFF is included below. This diagram was provided by the Applicant and can also be found in Exhibit D.

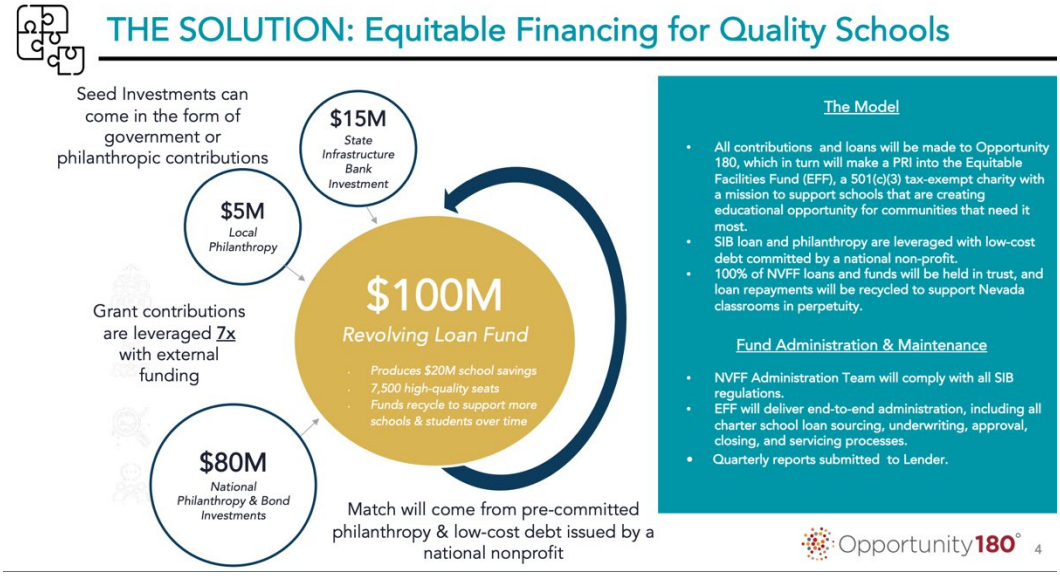

Being that the Applicant does not directly issue bonds and has not received reports from bond rating agencies, Bank staff has reviewed rating agency reports that are publicly available for the ESRF.

S&P Global Ratings has assigned the following ratings to the ESRF:

- July 2022: A-rating with a positive outlook
- September 2021: A-rating with a stable outlook
- June 2020: A-rating with a stable outlook

On July 25, 2022, S&P Global Ratings revised its outlook to positive from stable, while also reaffirming its 'A' rating on the ESRF's senior national charter school revolving loan fund revenue bonds issued in 2019, 2020, and 2021. These bonds have been issued through various series by the Arizona Industrial Development Authority, the California Infrastructure and Economic Development Bank, the Massachusetts Development Finance Agency, and the City of Albany Capital Resource Corp., N.Y.

In this revised outlook, S&P Global Ratings cited that increased diversification of charter school loans in additional states coupled with the overall performance of the fund and lack of loan defaults gave rise to the move from positive to stable.

Also in its July 2022 ratings report, S&P Global Ratings assigned its 'A' rating with a positive outlook to the $170.0 million series 2022A senior bonds issued by Arizona Industrial

Development Authority, and the $69.1 million series 2022B senior bonds issued by the California Infrastructure and Economic Development Bank.

In the announcement of the revised outlook, S&P Global Ratings noted that it provided the change due "based on the trend of ongoing diversification of the loan portfolio."

In 2019, the ESRF operated 11 loans to charter school operators and increased that number to 58 loans in 2022. S&P Global Ratings also noted that during the program's history since 2019 there have been no delinquent payments or defaults, which the agency expected to continue over the next several years.

With S&P Global Ratings' strong assessment of the steady growth within the ESRF, Bank staff believes that the addition of the proposed NVFF within the portfolio would only strengthen the overall performance of the ESRF in the view of rating agencies through increased growth diversification for the overall fund.

e. For applicants who are governmental units, a review of existing property tax rates and general obligation bonding capacity.

Bank staff has determined this section is not applicable for this project and/or this Applicant.

f. An analysis of the existing indebtedness of the applicant, both secured and unsecured; and

In analyzing the Applicant's 2023 Operating Budget, last five years of audited financial statements, and corresponding Form 990s, Bank staff has not identified any outstanding debts that are required to be repaid by the Applicant outside of the operating lease for office space which was outlined in a previous section of this report.

All budgets, audited financial statements, and annual operating documents suggest that the Applicant is a stable financial position.

g. An analysis of cash flow projections.

A full cash flow model for the proposed NVFF from 2023-2042 can be found in Exhibit A of this report. Bank staff has analyzed the projections for bond proceeds deposited within the Fund, expected loans to charter schools that will be made from 2023-2027, anticipated repayments to the Bank, expected repayments from charter schools into the Fund, expectations on debt service payments, annual operating expenses, and annual surpluses that will be recycled into the Fund.

Bank staff has determined that all cash flow projections contained within Exhibit A seem reasonable and attainable over the 20-year period.

6. Examine population trends.

Given that the NVFF is proposing to create 7,500 charter school seats, Bank staff has examined the enrollment trends within the student population that attends charter schools in Nevada to better understand the feasibility of the proposed loan pipeline for the NVFF.

According to the Nevada Department of Education, at total of 55,415 students were enrolled across 78 schools under the State Public Charter School Authority ("SPCSA") for the 2021-2022 school year. Additionally, several local school districts also currently sponsor charter schools, including the Carson City School District, which sponsors one school, the Clark County School District which sponsors six schools, and the Washoe County School District which sponsors seven schools over 10 campuses.

Given that proposed NVFF would largely support students at schools within the SPCSA, staff has largely focused on enrollment trends within the schools sponsored the SPCSA for this analysis.

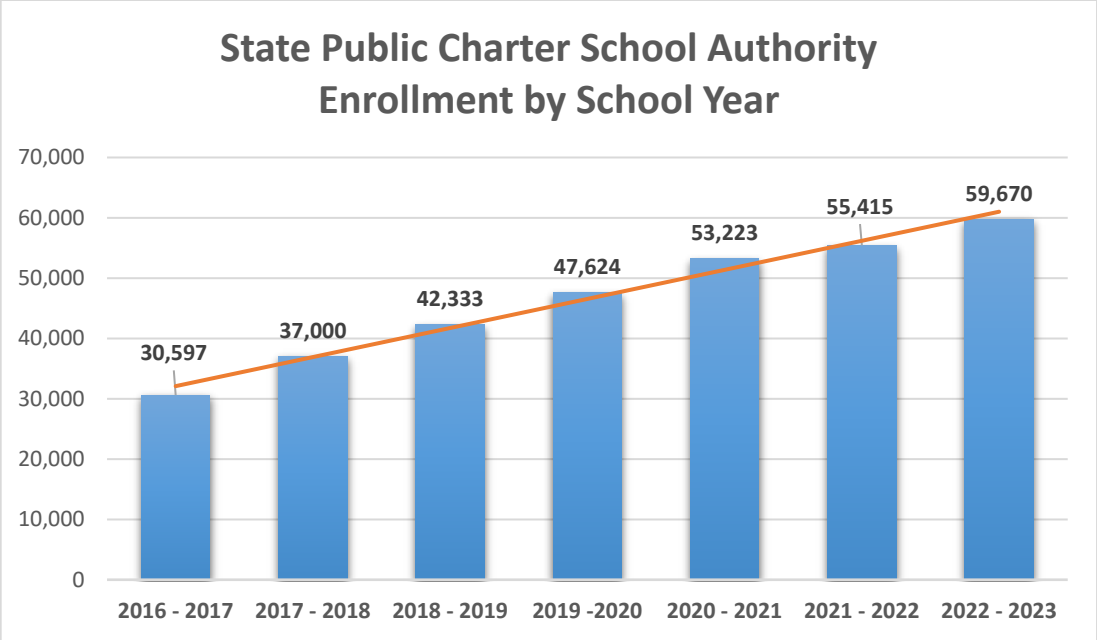

Source: *Enrollment for Nevada Public Schools*, Nevada Department of Education. Accessible at: https://doe.nv.gov/DataCenter/Enrollment_Data/

Since the 2016-2017 school year, the number of students enrolled in charter schools sponsored by the SPCSA has steadily increased by over 29,000 total students with an average yearly increase of 11.9%.

School Year	Charter School Enrollment	Increase in Enrollment	Percentage Increase over Previous Year
2016 – 2017	30,597		
2017 - 2018	37,000	6,403	20.93%

2018 - 2019	42,333	5,333	14.41%
2019 - 2020	47,624	5,291	12.50%
2020 - 2021	53,223	5,599	11.76%
2021 - 2022	55,415	2,192	4.12%
2022 - 2023	59,670	4,255	7.68%

Source: *Enrollment for Nevada Public Schools*, Nevada Department of Education. Accessible at: https://doe.nv.gov/DataCenter/Enrollment_Data/

The total number of schools that have been authorized by the SPCSA has also steadily increased over the last seven academic school years.

In the 2016-2017 school year, there were 24 authorized charter schools within the SPCSA. Comparatively, for the 2022-2023 school year there were 78 authorized charters, which equates to an average growth rate of 25.55% per year.

If we omit significant outlier in the 2017-2018 school year, Accordingly, the number of schools within the SPCSA has grown by an average of 9.82% since the 2018-2019 school year.

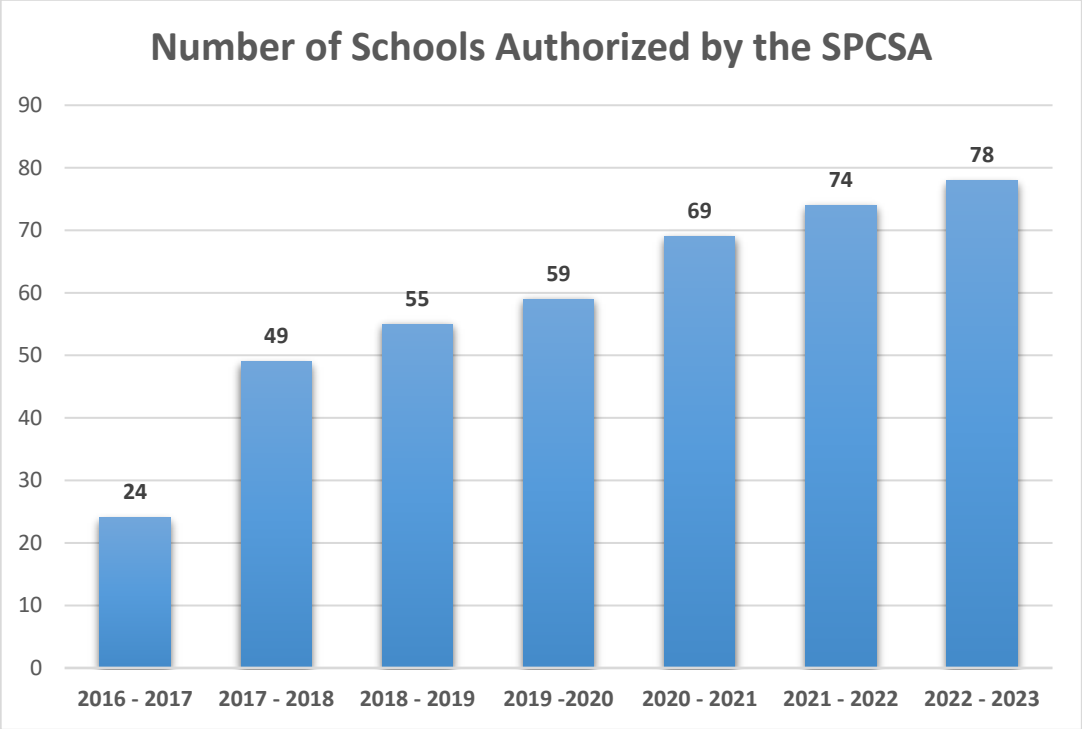

Source: *Enrollment for Nevada Public Schools*, Nevada Department of Education. Accessible at: https://doe.nv.gov/DataCenter/Enrollment_Data/

In establishing the NVFF, the Applicant anticipates creating 7,500 high-quality charter school seats through projects supported by the Fund. Not accounting for any additional schools outside of the NVFF that are approved by the SPCSA, this would bring the total enrollment count to 67,170 students over time, or an increase 12.57% in total enrollment.

Bank staff has confirmed with staff from the SPCSA that this projected growth in enrollment through the proposed NVFF would be consistent with the Agency's 2019-2024 Strategic Plan, 2021 Growth Management Plan, and the 2023 Needs Assessment.

7. Examine assessed value trends.

Bank staff has determined this section is not applicable for this project and/or this Applicant.

8. Evaluate the relevant legal authority applicable to the applicant, including, without limitation, state law, federal tax law and local ordinances and resolutions.

Pursuant to NRS 408.55063, a qualified borrower that is eligible to receive a loan or other financial assistance from the Bank is defined as "a governmental unit, an Indian reservation or Indian colony or a private nonprofit entity created for charitable or educational purposes."

As expressed in the financing application submitted to the Bank, the Applicant is a Nevada 501(c)3 organization that is *"dedicated to ensuring that every child has access to a high-quality public school that puts them on track to be college and career ready."*

The Applicant is governed by a 7-member Board of Directors that meets quarterly and directly supervises the CEO of the organization. At the time of submission of the application for financing, the Applicant's Board of Directors consisted of the following members:

- Miles Dickson, Board Chair
- Monica Moradkhan, Treasurer
- Paula Sneed, At-large member
- Sebern Coleman, At-large member
- Nick Portz, At-large member
- Piper Overstreet, At-large member
- Mike Mullin, At-large member

Being that the Applicant is indeed a qualified private nonprofit entity within the State of Nevada that was created for charitable or educational purposes, it would meet the standard as a qualified borrower under NRS 408.55063.

Since the proposed NVFF would operate as a partnership between the Applicant and EFF, staff would also note that EFF is a national 501(c)3 non-profit and social impact fund that seeks to transform capital access for schools and communities.

Since the NVFF would involve the issuance of tax-exempt bonds through the ESRF, staff would also note that under NRS 408.55085, qualified borrowers retain the right to issue general obligation bonds or other bonds that the qualified borrower is otherwise lawfully authorized to issue.

9. ***Evaluate the extent to which the management of the applicant understands the obligations, terms and conditions of the loans and other financial assistance provided by the Bank.***

Based on the financing application that was submitted to the Bank, discussions that Bank staff had with the Applicant during the application review process, and through recent negotiations on the proposed loan agreement outlined in Exhibit C, Bank staff feels that the management of the Applicant thoroughly understands the terms and conditions of the proposed loan to establish the NVFF, along with all reporting requirements that will be imposed by the Bank.

10. ***Determine the readiness of the management of the applicant to assume responsibility for the timely repayment of the loan or other financial assistance.***

The Applicant has a strong history within the State of Nevada of engaging with charter school operators. Their proposed partner, EFF, has significant experience offering similar loan products to charter schools throughout the country. Based on this combined experience, Bank staff has determined that the management of the Applicant is ready to assume responsibility for the timely repayment of the Bank's loan over the 20-year period.

Charter School Capital Needs Revolving Account Requirements: Pursuant to LCB File No. R017-22, the Board of Directors is authorized to approve a loan or other financial assistance from the Bank's Charter School Capital Needs Revolving Account if:

1) *It will be used solely to finance or refinance outstanding debt for the development, construction, repair, improvement, maintenance or acquisition of a charter school facility for a new or existing charter school;*
2) *It will be used to support new or existing charter school facilities where at least 60 percent of pupils are considered to be "at risk" as defined in NRS 388A.045;*
3) *The developer selected for the eligible project(s) demonstrates a long-term commitment to hiring local residents and using apprentices in programs that are registered with the State Apprenticeship Council; and*
4) *The applicant has provided written authorization for the project from the sponsor of the charter school.*

Staff has determined that the NVFF will meet these requirements in the following ways:

1) All projects financed through the NVFF will support new and existing charter schools located in the State;
2) All charter schools supported by the NVFF will serve at least 60 percent of at-risk pupils;
3) The Applicant will be required through the loan agreement to utilize developers for all projects funded through the NVFF who demonstrate "a long-term commitment to hiring local residents and utilize apprentices in apprenticeship programs registered with the State Apprenticeship Council"; and

4) All schools who seek financing through the NVFF will be required to receive written authorization from the State Public Charter School Authority in order to receive additional financing from the NVFF.

Community Benefits and Job Creation: If the Board of Directors chooses to approve this application, a $15,000,000 loan from the Bank will serve as leverage for an additional $85,000,000 in private and philanthropic investments to establish the NVFF.

Bank funds would be leveraged seven times to establish a $100,000,000 revolving loan fund to provide low-cost financing to charter school operators. By offering schools significantly reduced interest rates, the NVFF is estimated to produce $20,000,000 in debt financing savings for schools. These savings can then be redeployed by charter school operators to maximize the resources they have available to support student learning and development.

The NVFF is expected to provide an additional 7,500 high-quality public charter school seats for children in Nevada's most disadvantaged communities. Approximately 70% of students attending schools that will be supported by the NVFF will identify as people of color and 70% will qualify for free or reduced-price lunch.

As specified in the application for financing, the NVFF is projected to create 948 jobs over the first five years of the Fund's operations. This includes:

- 688 construction jobs (both direct and indirect); and
- 260 education jobs.

The NVFF is expected to close two loans each year for a total of 10 projects that will be funded within the first five years of operation. The Applicant anticipates that four of these 10 financings will fund construction projects, and the other six projects will be refinancings for charter school facilities. The estimated cost for these four projects is approximately $45,000,000.

Local Hiring, Apprenticeship Utilization, and Prevailing Wages: Qualified Borrowers who receive a loan or other financial assistance from the Bank are required pursuant to LCB File No. R017-22 to ensure that for each contractor and subcontractor who performs construction work on a qualified project:

- At least 50% of the total project work hours within each construction trade are performed by Nevada residents, with at least 15% of these work hours performed by disadvantaged workers; and
- At least 15% of the total project work hours within each construction trade must be performed by apprentices, with at least 5% of these work hours performed by first-year apprentices.

In its financing application and through subsequent documents submitted to the Bank, the Applicant has indicated it intends to comply with all these local hiring and apprenticeship standards for projects funded through the NVFF.

Additionally, pursuant to NRS 408.55086, projects financed by the Bank are subject to the payment of State prevailing wages, along with other provisions set forth in NRS 338.013 - 338.090.

In the financing applicant submitted to the Bank, the Applicant stated that projects funded through the NVFF will include the payment of prevailing wages as applicable.

If the Board of Directors to chooses to approve this application for a loan from the Bank, all projects funded through the NVFF will be subject to these provisions, and Bank staff will work with the Applicant to provide the Board of Directors with regular reporting on compliance with these provisions.

Environmental Standards: All qualified projects that receive loans or other financial assistance from the Bank are required to align with the standards and goals set forth in Nevada's 2020 Climate Strategy as well as the State's goals from the reduction of greenhouse gas emissions set forth in NRS 445B.380 and NRS 704.7820.

In the financing application submitted to the Bank, the Applicant has confirmed that all projects financed by the NVFF will adhere to these requirements.

Disadvantaged Community Goals: As set forth in Regulation LCB File No. R017-22, the Bank has an established goal of having at least 40 percent of the principal amount of its loans and other financial assistance going to support qualified projects that are located in:

- In qualified census tracts as designated by the U.S. Secretary of Housing and Urban Development;
- In census tracts which have a high level of social vulnerability according to the Social Vulnerability Index developed by the Centers for Disease Control and Prevention;
- In communities which are determined by the Board of Directors to have a relatively large percentage of the population having limited English proficiency;
- On tribal lands or in communities where tribal members commonly reside; or
- In areas that have been subject to historical instances of redlining, segregation, or other discriminatory practices.

In the financing application, the Applicant stated that charter school projects funded through the NVFF would be located in qualified census tracts, census tracts with a high level of social vulnerability, in communities which has a large percentage of the population with limited English proficiency, or in communities that have been subject to historical instances of redlining, segregation, or other discriminatory practices.

On August 9, 2022, the Applicant provided Bank staff with a list of potential charter school projects that it, along with EFF, would likely implement into the NVFF's charter school pipeline through 2025 if approved. These include:

Phase 1 Projects:

- Nevada Preparatory Charter School
    - Refinancing
    - 1780 Betty Lane, Las Vegas, NV 89156
- Nevada Rise Academy
    - Purchase and build-out
    - 2525 Emerson Avenue, Las Vegas, NV 89121
- Equipo Academy
    - Build-out
    - 4131 East Bonanza Road, Las Vegas, NV 89110
- Democracy Preparatory Academy
    - Ground up build-out
    - 1201 W. Lake Mead Blvd., Las Vegas, NV

Phase 2 Projects:

- Futuro Academy
    - Refinancing
    - 920 North Lamb Blvd. Las Vegas, NV 89110
- Girls Empowerment Middle School
    - Purchase leased facility
    - 4220 South Maryland Pkwy, Las Vegas, NV 89119
- Explore Academy
    - Refinancing
    - 3551 North Ferrell Street, North Las Vegas, NV 89032
- TEACH Las Vegas
    - Refinancing and new build
    - 4660 North Rancho Drive, Las Vegas, NV 89130

Bank staff has analyzed the current location of each of these proposed charter schools to understand whether they would meet the 40% goal of locating all projects in disadvantaged communities.

In performing this analysis, staff has utilized data from the U.S. Department of Housing and Urban Development, the Centers for Disease Control and Prevention, the U.S. Census Bureau, and the U.S. Department of Agriculture.

Since the national average estimate for limited English proficiency has been determined by the U.S. Census Bureau to be 8.3 percent, Bank staff has determined that census tracts with over

20% of the population limited English proficiency would meet the Bank's standard for its disadvantaged community goal.

The following table shows how each of these proposed charter schools compares to the Bank's metrics for locating projects in disadvantaged communities.

	Qualified Census Tract	High Social Vulnerability	Large percentage of limited English proficiency (> 20%)	Tribal Lands
Nevada Prep	No	Yes	Yes	No
Nevada Rise	No	Yes	Yes	No
Equipo Academy	Yes	Yes	Yes	No
Democracy Prep	Yes	Yes	No	No
Futuro Academy	Yes	Yes	No	No
Girls Empowerment Middle School	Yes	Yes	Yes	No
Explore Academy	No	Yes	No	No
TEACH Las Vegas	No	No	No	No

Of the eight charter schools provided by the Applicant in its proposed pipeline of charter schools anticipated to receive loans through the NVFF:

- 50% are currently located within a qualified census tract;
- 87.5% are located in census tracts with a high-level social vulnerability; and
- 50% are located in communities with a large percentage of the population having limited English proficiency.

While none of the proposed projects would be located on Tribal land, staff would note that nothing would preclude the applicant from selecting a potential project to serve Tribal students if an opportunity arose in the future.

87.5% of the proposed charter school pipeline for the NVFF would meet at least one of the Bank's criteria for location within a disadvantaged community. Therefore, Bank staff is confident that the applicant would continue selecting schools for the NVFF that would exceed the Bank's 40% goal.

Loan Agreement: Bank staff has worked with the Applicant and legal counsel retained by the Bank to draft a loan agreement between the Nevada State Infrastructure Bank and the Applicant for this project. This loan agreement is included in Exhibit C for consideration by the Board of Directors.

<u>Staff recommendation:</u> Based on the foregoing analysis, staff recommends that the Board of Directors approve a loan of $15,000,000 from the Bank's Charter School Capital Needs Revolving Account to Opportunity 180 to establish the Nevada Facilities Fund in accordance with the proposed loan terms included in Exhibit B.

Exhibit A

NEVADA FACILITIES FUND
Sources & Uses and Cash Flow Pro Forma
Limited Philanthropy Scenario -- $100M+ Loans

	2023	2024	2025	2026	2027	2028	2029	2030	2031	2032	2033	2034	2035	2036	2037	2038	2039	2040	2041	2042
CAPITAL SOURCES & USES																				
SOURCES																				
SIB Loan (1)	15,000,000	-	-	-	-	-	-	-	-	-	-	-	-	-	-	-	-	-	-	-
Philanthropy/PRI (2)	5,350,000	-	-	-	-	-	-	-	-	-	-	-	-	-	-	-	-	-	-	-
Recycled Surplus (3)	-	94,892	350,478	616,414	892,859	1,180,288	1,631,919	1,630,919	1,629,899	1,628,859	1,627,798	1,626,715	1,625,611	1,624,485	1,623,336	1,622,165	1,620,970	1,619,751	1,618,507	3,233,184
Bonds (4)	16,480,000	17,149,536	##########	18,590,923	19,355,075	-	-	-	-	-	-	-	-	-	-	-	-	-	-	-
Total Sources - Annual	36,830,000	17,244,428	##########	19,207,336	20,247,934	1,180,288	1,631,919	1,630,919	1,629,899	1,628,859	1,627,798	1,626,715	1,625,611	1,624,485	1,623,336	1,622,165	1,620,970	1,619,751	1,618,507	3,233,184
Cumulative Capital Sources	36,830,000	54,074,428	##########	91,488,370	##########	##########	##########	##########	##########	##########	##########	##########	##########	##########	##########	##########	##########	##########	##########	##########
USES																				
School Loans - Annual (5)	20,600,000	21,424,000	##########	23,172,198	24,099,086	-	-	-	-	-	-	-	-	-	-	-	-	-	-	-
SIB Loan Repayment (6)	1,500	1,500	1,500	1,500	1,500	1,500	1,500	1,500	1,500	1,500	1,500	1,500	1,500	1,500	1,500	1,500	1,500	1,500	1,500	19,471,500
Cumulative School Loans	20,600,000	42,024,000	##########	87,477,158	##########	##########	##########	##########	##########	##########	##########	##########	##########	##########	##########	##########	##########	##########	##########	##########
SIB Loan Leverage Ratio (7)	*1.4*	*2.8*	*4.3*	*5.8*	*7.4*	*7.4*	*7.4*	*7.4*	*7.4*	*7.4*	*7.4*	*7.4*	*7.4*	*7.4*	*7.4*	*7.4*	*7.4*	*7.4*	*7.4*	*7.4*
YEAR-END FUND BALANCE	16,228,500	12,047,428	7,971,574	4,005,212	152,559	1,331,348	2,961,767	4,591,186	6,219,586	7,846,945	9,473,242	11,098,458	12,722,569	14,345,554	15,967,390	17,588,055	19,207,525	20,825,775	22,442,783	6,204,467
CASH FLOW P&L																				
Inflow																				
Loan Repayments (8)	647,292	1,967,769	3,341,065	4,769,292	6,254,649	7,011,890	7,011,890	7,011,890	7,011,890	7,011,890	7,011,890	7,011,890	7,011,890	7,011,890	7,011,890	7,011,890	7,011,890	7,011,890	7,011,890	7,011,890
Outflow																				
Bond Debt Service (9)	(491,090)	(1,493,220)	(2,536,358)	(3,622,448)	(4,753,206)	(5,329,970)	(5,329,970)	(5,329,970)	(5,329,970)	(5,329,970)	(5,329,970)	(5,329,970)	(5,329,970)	(5,329,970)	(5,329,970)	(5,329,970)	(5,329,970)	(5,329,970)	(5,329,970)	(5,329,970)
Operating Expenses (10)	(61,310)	(124,071)	(188,293)	(253,985)	(321,155)	(50,000)	(51,000)	(52,020)	(53,060)	(54,122)	(55,204)	(56,308)	(57,434)	(58,583)	(59,755)	(60,950)	(62,169)	(63,412)	(64,680)	(65,974)
ANNUAL SURPLUS (CASH)	94,892	350,478	616,414	892,859	1,180,288	1,631,919	1,630,919	1,629,899	1,628,859	1,627,798	1,626,715	1,625,611	1,624,485	1,623,336	1,622,165	1,620,970	1,619,751	1,618,507	1,617,239	1,615,945

NOTES

(1) **SIB Loan**	$15M loan projected with a fixed interest rate of 1.5% and 20-year term. All principal and accrued interest will be paid with one balloon payment at maturity in 2042. *Use Input tab to toggle alternative loan structures.*
(2) **Philanthropy/PRI**	Philanthropic capital raised by 0180 & EFF. $5.5M already committed; $150K not included in this line will be used to pay the 1% SIB loan origination fee. In this scenario, no additional philanthropy is committed after 2023 and the fund ceases making loans after 2027.
(3) **Recycled Surplus**	See Line 32. Surplus cash will recycle into additional charter school loans. 2042 amount reflects 2041 Annual Surplus plus 2042 Annual Surplus since funds will be used to repay SIB Loan P&I that year.
(4) **Bonds**	A-rated tax-exempt bond proceeds provided by EFF.
(5) **School Loans**	NVFF will fund approximately two projects per year. Loans are projected at $10.3M each in 2023 (including COI). We expect project costs will increase over time.
(6) **SIB Loan Repayment**	$19,500,000 total reflects loan principal plus $4.5M accrued interest. *Use input tab to toggle other repayment structures.*
(7) **SIB Loan Leverage Ratio**	Calculated by the toal number of loans divided by SIB's $15M investment. In this scenario, NVFF would seize making loans after 2027. EFF would continue to service outstanding loans until their maturity.
(8) **Loan Repayments**	Loans are priced to 1) save schools ~$3M over a 30-year loan term and 2) provide revenue to support NVFF sustainability & ensure repayment of the SIB obligation.
(9) **Bond Debt Service**	Projected debt service owed to EFF's investors.
(10) **Operating Expenses**	OpEx reduced in 2028 to reflect cessation of underwriting and technical assistance activities.

Exhibit B

State Infrastructure Bank / NVFF Proposed Loan Terms:

Lender	Nevada State Infrastructure Bank
Borrower	Opportunity 180
Loan Amount	$15,000,000
Loan Purpose	Loan proceeds will be leveraged to support the launch of the Nevada Facilities Fund, a revolving credit facility designed to substantially reduce financing expenses for high-quality public charter schools and create additional educational opportunities in low-income communities.
Maturity	20 years
Security	Unsecured general obligation of the Borrower
Interest Rate	Fixed rate of 1.5% per annum
Disbursement	Two $7,500,000 disbursements. First disbursement upon loan closing, and second disbursement on January 15, 2024.
Additional Sources of Funding	Borrower will secure additional philanthropic funding and low-cost debt financing to support NVFF lending activity. Target initial leverage amount will be $85,000,000, to support a total of $100,000,000 in charter school loans.
Terms of Repayment	Annual interest-only payments of 0.01% of the outstanding loan balance until maturity. A balloon payment equal to the principal and accrued interest will be due at the maturity date.
SIB Loan Origination Fee	$150,000 due at the time of loan closing.
NVFF Administration	The NVFF will be administered by the Borrower in conjunction with the Equitable Facilities Fund (“EFF”), a 501c3 non-profit organization that has a mission to reduce facilities expenses for high-performing charter schools nationwide. The Borrower and EFF will deliver end-to-end administration, including all charter school loan sourcing, underwriting, approval, closing, and servicing processes. Borrower will be responsible for adhering to all regulations and reporting requirements established by the Lender.
Reporting	Borrower will submit quarterly reports to Lender. Reports will include total number of loans and financing amounts committed by the NVFF; academic, financial, and demographic characteristics of the charter school obligors; and progress toward NVFF investment and school performance goals aligned upon by the Borrower and Lender.

Exhibit C

Nevada State Infrastructure Bank

AND

Opportunity 180

Financing Agreement for the Nevada Facilities Fund Project

Nevada State Infrastructure Bank
555 East Washington Avenue, Suite 5200
Las Vegas, NV 89101

NEVADA STATE INFRASTRUCTURE BANK FINANCING AGREEMENT

THIS AGREEMENT is dated as of October 30, 2023, and is by and between the NEVADA STATE INFRASTRUCTURE BANK (the "Bank"), an instrumentality of the State of Nevada, and OPPORTUNITY 180 (the "Borrower"), existing as a private non-profit entity created for charitable or educational purposes under the laws of the State of Nevada.

WITNESSETH:

WHEREAS, pursuant to Chapter 408 of the Nevada Revised Statutes ("NRS") and the Nevada Administrative Code ("NAC"), the Bank is authorized to provide loans and other financial assistance to qualified borrowers for the development, construction, repair, improvement, operation, maintenance, decommissioning and ownership of transportation facilities, utility infrastructure, water and wastewater infrastructure, renewable energy infrastructure, recycling and sustainability infrastructure, digital infrastructure, social infrastructure, and other infrastructure related to economic development as necessary for public purposes; and

WHEREAS, in accordance with the provisions NRS Chapter 408, the Bank has responsibility for the performance of various activities in connection with such loans; and

WHEREAS, the Borrower has made an application for the financing of the Project (as hereinafter defined), through a loan made under and pursuant to NRS Chapter 408, and the Bank has determined that the Project meets all requirements for a loan and has agreed to make a loan to the Borrower for the financing of the Project as set forth in this Agreement (the "Loan"); and

WHEREAS, the Loan and all payments of principal and interest thereon, including prepayments, and all proceeds thereof, have been or are intended to be pledged and assigned as security for the payment of principal of, premium, if any, and interest on the Bonds as set forth in NRS 408.55085.

NOW, THEREFORE, in consideration of the Bank making the loan to the Borrower, in the principal amount and pursuant to the covenants hereinafter set forth, and intending to be legally bound by this Agreement, the Bank and the Borrower agree as follows:

ARTICLE I – DEFINITIONS

1.01. WORDS AND TERMS.

In addition to the words and terms elsewhere defined in this Agreement, the following words and terms shall have the meanings set forth below:

(1) "Agreement" or "Financing agreement" shall mean this financing agreement and all exhibits and schedules attached hereto.

(2) "Agreement Date" means the date first written above.

(3) "Authorized Representative" shall mean the official or officials of the Borrower authorized by ordinance or resolution to sign documents associated with the Loan.

(4) “Capitalized Interest” shall mean a finance charge that accrues on Loan proceeds from the time of disbursement. Capitalized Interest is financed as part of the Loan principal.

(5) “Code” shall mean the Internal Revenue Code of 1986, the Treasury Regulations (whether temporary or final) under that Code or the statutory predecessor of that Code, and any amendments of or successor provisions to, the foregoing and any official rulings, announcements, notices, procedures and judicial determinations regarding any of the foregoing, all as and to the extent applicable.

(6) “Credit Enhancement” means, the United States Department of Education Credit Enhancement for Charter School Facilities Grant award to Borrower, in the amount of $7,500,000.

(7) "Financing Rate" shall mean the charges, expressed as a percent per annum, imposed on the unpaid principal of the Loan as set forth herein.

(8) "Loan" shall mean the loan made to the Borrower pursuant to this Agreement and the State Act in the initial principal amount of $15,000,000.

(9) "Financing Application" shall mean the completed form which provides all information required to support obtaining the Loan.

(10) "Loan Payment" or "Loan Repayment" shall mean the periodic loan payment due from the Borrower.

(11) "Project" shall mean the state capital outlay project financed by this Loan, consisting of all labor, materials, and equipment designated to develop the Nevada Facilities Fund, which will assist in the development of qualifying charter schools as more fully described in the Financing Application, in accordance with applicable law and the summary specifications included in Exhibit C.

(12) "State" means the State of Nevada.

(13) "State Fiscal Year" shall mean the period commencing on July 1 of each year and ending on June 30 of the succeeding year.

(14) "State Infrastructure Bank" or "Bank" means the State-funded State Infrastructure Bank created pursuant to Chapter 408 of the Nevada Revised Statutes.

(15) “Unrecoverable School Loan Loss” means, with respect to any NVFF loan to a charter school that has defaulted, the amount of unpaid principal after taking into account (i) all payments of principal received by Equitable Facilities Fund pursuant to such loan, and (ii) all amounts collected or received by the Equitable Facilities Fund after making commercially reasonable efforts to exercise remedies against collateral pursuant to such loan.

ARTICLE II - WARRANTIES, REPRESENTATIONS AND COVENANTS

2.01. GENERAL WARRANTIES, REPRESENTATIONS AND COVENANTS.

The Borrower warrants, represents and covenants that:

(1) The Borrower has full power and authority to enter into this Agreement and to comply with the provisions hereof and shall initiate and prosecute to completion all proceedings necessary to enable the Borrower to provide the necessary funds for repayment of the Loan.

(2) The Borrower currently is not the subject of bankruptcy, insolvency, or reorganization proceedings and is not in default of, or otherwise subject to, any agreement or any law, administrative regulation, judgment, decree, note, resolution, charter or ordinance which would currently restrain or enjoin it from entering into, or complying with, this Agreement.

(3) There is no material action, suit, proceeding, inquiry or investigation, at law or in equity, before any court or public body, pending or, to the best of the Borrower's knowledge, threatened, which seeks to restrain or enjoin the Borrower from entering into or complying with this Agreement or could render Borrower insolvent.

(4) All permits, authorizations, and approvals required as of the date of this Agreement have been obtained as of the implementation of the Project. The Borrower knows of no reason why any future required permits or approvals are not obtainable.

(5) The Borrower shall undertake the Project on its own responsibility, to the extent permitted by law.

(6) To the extent permitted by law, the Borrower shall release and hold harmless the State, its agencies, the Bank, and each of their respective officers, members, and employees from any claim arising in connection with the Borrower's actions or omissions in the Borrower's planning, administration, and implementation of activities financed by the Loan or its operation of the Project.

(7) All Borrower representations to the Bank, pursuant to the Financing Application and this Agreement, were and are true and accurate as of the date the Financing Application and this Agreement were each executed by the Borrower. The financial information delivered by the Borrower to the Bank was current and correct as of its date. Since the date such financial information was delivered, there has not been any material adverse change in the financial condition or revenues and expenditures of the Borrower. The Borrower shall comply with all applicable State and Federal laws, rules, and regulations. To the extent that any assurance, representation, or covenant requires a future action, the Borrower shall take such action as is necessary for compliance.

(8) The Borrower shall adhere to accepted governmental accounting principles established by the Governmental Accounting Standards Board. As part of its bookkeeping system, the Borrower shall keep accounts of the Project separate from all other accounts and it shall keep accurate records of all expenditures relating to the Project and Loan disbursement receipts.

(9) The Borrower shall maintain and produce to the Bank an annual budget consistent with generally accepted accounting principles.

(10) The Borrower covenants that this Agreement is entered into for the purpose of implementing, refunding, or refinancing the Project which will in all events serve a public purpose. The Borrower covenants that it will, under all conditions, complete and operate the Project to fulfill the public need described in its application for the financing of the Project.

2.02 RESERVED.

2.03 AUDIT AND MONITORING REQUIREMENTS.

(1) Unless an event of default described under Section 6.01 has occurred and is continuing, the Bank shall have the right, once per calendar year, upon at least five (5) business days' prior notice to the Borrower, during normal business hours, to (i) examine the records, books and other papers which reflect upon Borrower's financial condition or pertain to the income, expense, management, administration, and implementation of the Project and to make copies and abstracts from such materials and (ii) conduct an audit or have an independent audit conducted of any of Borrower's financial information; provided, that upon the occurrence and during the continuance of an event of default described under Section 6.01, no such limitations or requirements as to frequency, timing or notice shall apply. At the conclusion of any audit conducted by or on behalf of the Bank, an audit report shall be prepared and delivered to the Borrower. Borrower shall pay on demand all reasonable and documented costs incurred by Bank with respect to any such audit. Upon Borrower's failure to pay such amounts, such unpaid amounts shall be added to principal and shall bear Capitalized Interest until paid in full.

(2) The Bank may, following any such examination or audit, issue to the Borrower such reports, audit findings, and memoranda as it deems appropriate to notify the Borrower of any error, deficiency, or unsatisfactory condition (an "Adverse Condition") the Bank may discover. Such notification may be delivered in writing by any reasonable means including without limitation by email or first-class mail. Upon the Borrower's receipt of such notification, the Borrower shall use commercially reasonable efforts to correct, resolve, or remedy any Adverse Condition to the reasonable satisfaction of the Bank. Records related to any audits, Adverse Conditions, litigation, or corrective action shall be retained for a period of no less than 5 years following the resolution of the same.

(3) Nothing in this Section 2.03 shall be construed to limit the authority of any other State official.

(4) Copies of financial reporting packages, reports, or management letters required by this agreement shall be submitted by or on behalf of the Borrower directly to the Bank.

2.04 PROGRESS REPORTS

No later than January 31st, April 30th, July 31st, October 31st of each calendar year, the Borrower shall create and deliver to the Bank quarterly progress reports (individually, a "Progress Report") describing all material events, developments, and conditions of the Project. Progress Reports shall be submitted electronically to the Bank by an individual authorized by the governing board of the Borrower. At minimum, each Progress Report shall describe:

(1) All financial activities, events, and transactions which have occurred in the preceding 12 months.

(2) An analysis of the financial condition of the Project.

(3) Program accomplishments occurring in the prior 12 months, including:

a. Specific action taken to implement approved objectives and activities of the Project;

b. Progress made on each objective and activity of the Project in terms of percentage completed.

(4) Any material delays in the implementation of the Project, Project objective, or Project activity and the reason for the delay. In the event of a material delay, a proposed revised Project schedule should be included if activities are not conforming to approved Project schedules as contained in the Financing Application.

(5) Academic, financial, and demographic characteristics of the charter school obligors.

(6) Progress toward NVFF investment and school performance goals aligned upon by the Borrower and Bank.

(7) Financial information of the Project, including but not limited to:

a. The total number of loans and financing amounts committed by the Borrower;

b. beginning fund balance;

c. Dollar amount of all expenditures;

d. ending fund balance;

e. interest earned to date; and

f. the amount and percent of funds being contributed to the Project from other sources.

Should the Bank require any additional information or analysis from the Borrower following the receipt of any Progress Report, it shall make a request in writing to the individual who transmitted the Progress Report to the Bank. Any request for additional information shall set the Borrower's response deadline, which shall be strictly enforced.

2.05 RECORDS RETENTION.

The Borrower shall retain all records related to the Project for a period of no less than three (3)

years. The Borrower shall retain sufficient records demonstrating its compliance with the terms of this Agreement for a period of at least five (5) years from the date any audit report is issued, and shall allow the Bank, or its designee, access to such records in accordance with, and pursuant to, Section 2.03. The Bank or the State may extend the period during which any records must be retained upon written notice to the Borrower received at least thirty (30) days prior to any such extension. Borrower's failure to retain any records described in this Section 2.05 for the period prescribed (or any extension thereof) shall constitute a material event of default.

All costs charged to the Project, including any approved services contributed by the Borrower or others, shall be supported by properly executed payrolls, time records, invoices, contracts, or vouchers evidencing in proper detail the nature and propriety of the charges.

Any check or order drawn by the Borrower with respect to any item which is or will be supported by the Loan must be supported with a properly signed voucher on file in the office of the Borrower stating in proper detail the purpose for which such check or order is drawn. All checks, payrolls, invoices, contracts, vouchers, orders, or other accounting documents pertaining in whole or in part to the Project shall be clearly identified, and readily accessible, and, to the extent feasible, kept separate and apart from all other such documents.

2.06 ACCESS TO PROJECT SITES.

Unless an event of default described under Section 6.01 has occurred and is continuing, the Bank shall be granted access, once per calendar year, upon at least five (5) business days' prior notice to the Borrower, during normal business hours, to any location related to the use or proposed use of Loan funds and any administrative offices related thereto, including without limitation any charter school facilities financed through the Project; provided, that upon the occurrence and during the continuance of an event of default described under Section 6.01, no such limitations or requirements as to frequency, timing or notice shall apply. Any contracts or agreements the Borrower may enter into with such charter school facilities shall guarantee such access by the Bank and the State to sites related to the Project consistent with this Section 2.06. The Borrower shall cause all of its employees, agents, representatives, and contractors as well as each charter school facility to cooperate during any such Project inspections, including making available copies of any documents or other materials.

ARTICLE III - LOAN REPAYMENT DEFAULT NOTICE

3.01. LOAN REPAYMENT DEFAULT NOTICE.

If at any time the Borrower has advance notice that it will not be able to pay any Loan Payment when due, the Borrower shall immediately notify the Bank of such inability to make the required payment.

ARTICLE IV - THE PROJECT

4.01. PROJECT CHANGES.

The Borrower covenants and agrees that it will not change the scope of the Project or alter the nature of the Project in any material fashion, or substitute any other project for the Project, without the prior written approval of the Bank.

4.02. PROHIBITION AGAINST ENCUMBRANCES.

The Borrower is prohibited from selling, leasing, or disposing of any part of the Project which would materially adversely affect the ability of the Borrower to meet its obligations under this Agreement so long as this Agreement, including any amendment thereto, is in effect unless the written consent of the Bank is first secured.

4.03. COMPLETION MONEYS.

In addition to the proceeds of this Loan, the Borrower covenants that it has obtained, or will obtain, sufficient moneys from other sources to complete the Project on, or prior to, the Project completion date set forth in the Financing Application or such other date as the Bank may approve in writing. Failure of the Bank to approve additional financing, where required, shall not constitute a waiver of the Borrower's covenants to complete and place the Project in operation.

4.04. PROJECT SCHEDULE AND

INDEBTEDNESS.

The Borrower agrees:

(1) Initiation of Project is anticipated to take place on or about November 1, 2023.

(2) The first charter school loan expected to be funded through the Project is anticipated to be issued by April 30, 2024.

(3) The Loan Repayments shall be due at the times and in the amounts set forth on Exhibit B.

ARTICLE V – [RESERVED.]

ARTICLE VI - DEFAULTS AND REMEDIES

6.01. EVENTS OF DEFAULT.

Each of the following events shall be deemed a material event of default:

(1) Failure to make any Loan Payment when it is due and such failure shall continue for a period of 5 days.

(2) Any warranty, representation, or other statement by, or on behalf of, the Borrower

contained in this Agreement or in any document, certificate or information furnished in compliance with, or in reference to, this Agreement (other than projections, estimates and other forward-looking information and general economic or industry information), is determined to be false or misleading in any material respect.

(3) An order or decree is entered, with the acquiescence of the Borrower, appointing a receiver for any part of the Project; or if such order or decree, having been entered without the consent or acquiescence of the Borrower, shall not be vacated, or discharged or stayed on appeal within 60 days after the entry thereof.

(4) Any bankruptcy, insolvency or other similar proceeding is instituted by, or against, the Borrower under federal or state bankruptcy or insolvency law now or hereafter in effect and, if instituted against the Borrower, is not dismissed within 60 days after filing.

(5) Any failure to comply with the provisions of this Agreement or failure in the performance or observance of any of the covenants or actions required by this Agreement (a "General Non-compliance Default"), provided, however, that if the Borrower provides the Bank with written notice of a General Non-compliance Default within 30 days of the date of such General Non-compliance Default, and such default does not relate to the Borrower's obligations to make a Loan Payment, then the Borrower shall have 60 days from the date of such General Non-compliance Default to cure such General Non-compliance Default to the satisfaction of the Bank in the Bank's sole and absolute discretion. If the Borrower fails, within the time periods provided in the previous sentence, to (i) provide written notice of a General Non-compliance Default, or (ii) cure the General Non-compliance Default to the satisfaction of the Bank in the Bank's sole and absolute discretion, then the Borrower shall be deemed to be in default of this Agreement as of the date of the General Non-compliance Default.

6.02. REMEDIES.

Upon the occurrence and during the continuance of any event of default described under Section 6.01, the Bank may pursue any available remedy at law or in equity, including without limitation:

(1) By action or suit in equity, require the Borrower to account for all moneys received pursuant to this Agreement.

(2) By action or suit in equity, enjoin any acts or things which may be unlawful or in violation of the rights of the Bank.

(3) By notifying financial market credit rating agencies and potential creditors of the event of default.

(4) By suing for payment of amounts due, or becoming due, with interest on overdue payments together with all costs of collection, including attorneys' fees.

(5) By accelerating the repayment schedule or increasing the Financing Rate on the unpaid principal of the Loan to as much as 1.667 times the Financing Rate for a default under

Subsection 6.01(1).

In addition to pursuing any other remedy available under this Agreement, upon the occurrence and during the continuance of an event of default, the Bank may, by providing 60 days advance written notice to the Borrower, elect to terminate this Agreement, and the Bank shall have no further obligation or commitment under this Agreement to the Borrower. Any partial Loan Repayments by the Borrower shall be allocated first to interest and second to principal.

6.03. REMEDIES NOT EXCLUSIVE; DELAY AND WAIVER.

No remedy conferred upon or reserved to the Bank by this Article is exclusive and every such remedy shall be cumulative and shall be in addition to every other remedy. No delay or omission by the Bank to exercise any right or power accruing as a result of an event of default shall impair any such right or power or shall be construed to be a waiver of any such default or acquiescence therein, and every such right and power may be exercised as often as may be deemed prudent by the Bank. No waiver of any default under this Agreement shall extend to or affect any subsequent event of default, whether of the same or different provision of this Agreement or shall impair consequent rights or remedies.

ARTICLE VII - GENERAL PROVISIONS

7.01 DISCHARGE OF OBLIGATIONS.

All payments required to be made under this Agreement shall be cumulative and any deficiencies in any Fiscal Year shall be added to the payments due in the succeeding Fiscal Year and all Fiscal Years thereafter until fully paid. The Borrower may choose from time to time to prepay this Loan in whole or in part without premium or penalty.

7.02 ASSIGNMENT OF RIGHTS UNDER AGREEMENT.

The Bank may pledge or assign all or any parts of this Agreement without the prior consent of the Borrower after written notification to the Borrower. The Borrower shall not assign its rights and obligations under this Agreement without the prior written consent of the Bank.

7.03 AMENDMENT OF AGREEMENT.

This Agreement may only be amended in writing mutually executed by authorized representatives of the Bank and Borrower. However, no amendment shall be permitted which is inconsistent with any applicable State or Federal law. Any attempted amendment to this Agreement which is inconsistent with any State or Federal law shall be deemed void *ab initio.*

7.04 ANNULMENT OF AGREEMENT.

The Bank may unilaterally annul this Agreement if the Borrower has not drawn any of the Loan proceeds within six months of the first scheduled disbursement date referenced in Exhibit A. If the Bank unilaterally annuls this Agreement, the Bank will provide written notification to the Borrower.

7.05 RESERVED.

7.06 SEVERABILITY CLAUSE.

If any provision of this Agreement shall be held invalid or unenforceable, the remaining provisions shall be construed and enforced as if such invalid or unenforceable provision had not been contained herein.

ARTICLE XIII - DETAILS OF FINANCING

8.01 PRINCIPAL AMOUNT OF LOAN.

The Bank agrees to lend to the Borrower, and the Borrower agrees to repay the Bank the Loan at the times, in the amounts and in the manner set forth in this Agreement. The principal amount of the Loan as of any date shall consist of the aggregate Disbursements (as defined below), plus Capitalized Interest that has accrued and been added to the principal amount of the Loan, plus interest other than Capitalized Interest, if any, that has accrued and been added to the principal amount of the Loan, less the aggregate principal component of all Loan Repayments made, all as of such date.

Proceeds of the loan originated hereunder (i) shall be used by Borrower as set forth in Exhibit C hereto, and (ii) are intended by the parties hereto to serve as "first loss" funding for the NVFF. Notwithstanding the first paragraph of this Section 8.01, the parties hereto agree that the principal amount of the Loan due and payable pursuant to this Agreement shall be decreased by the amount of any Unrecoverable School Loan Loss.

Capitalized Interest is not disbursed to the Borrower but is amortized via Loan Repayments as if it were actually disbursed. Capitalized Interest shall be computed at the rate of 1.5% per annum and shall accrue on the principal amount of the Loan based on an actual-days- elapsed/365 day counting convention. Capitalized Interest accruing on the principal amount of the Loan through December 31 of each year shall be added to the principal amount of the Loan on the following January 1 until the date which is 12 months prior to the date the first Loan Payment is due, at which time the amount of Capitalized Interest accruing since the previous January 1 shall be added to the principal amount of the Loan and no additional Capitalized Interest shall accrue.

The estimated principal amount of the Loan as of the date of the first Loan Payment is $15,000,000, which consists of the amounts scheduled to be disbursed to the Borrower in the amounts and at the times set forth in Disbursement Schedule attached hereto as Exhibit A.

8.02 FINANCING RATE.

Interest shall accrue on the principal amount of the Loan at the Financing Rate. The Financing Rate is 1.5% per annum, compounded annually, using an actual-days- elapsed/365 day counting convention, as indicated by the schedule of Loan Disbursement/Repayments attached hereto as Exhibit B.

8.03 LOAN DISBURSEMENTS.

The Bank shall disburse the Loan to the Borrower in the amounts and at the times set forth in the Disbursement Schedule (Exhibit A) provided that prior to each Disbursement, the Bank receives a written request for such Disbursement which certifies that all prerequisites for such Disbursement have been satisfied. Any written request for a Disbursement shall be signed by the Borrower's Authorized Representative under penalty of perjury. The Bank may, prior to making any Disbursement, require Borrower to furnish it with any evidence the Bank may deem necessary to verify that Borrower has met the prerequisites for Disbursement. The Bank may elect, in its sole and absolute discretion, to withhold any Disbursement until it is satisfied that all prerequisites to Disbursement have been met.

Upon written request by the Borrower, the Bank may, in its sole and absolute discretion, amend the Disbursement Schedule to take into account unexpected events or reasonable adjustments to the financing of the Project. The Bank may, in its sole and absolute discretion, adjust the Loan Disbursement/Repayment Schedule attached hereto as Exhibit B.

Under no circumstances shall the sum of the Disbursements to the Borrower exceed $15,000,000 under this Agreement. Furthermore, the Bank's obligation to fund any Disbursement is subject to funds being made available by an appropriation made pursuant to Nevada law.

8.04 LOAN REPAYMENTS.

Loan Repayments shall be made at the time and in the amounts set forth in the Loan Disbursement/Repayment Schedule attached hereto as Exhibit B. To the extent the actual principal amount of the Loan calculated as provided in Section 8.01 above is less than the estimated principal amount of the Loan as set forth in Section 8.01 hereof, the amount of the scheduled Loan Payment credited to principal shall increase and the Loan Payment Schedule shall be adjusted, so that the Loan is paid in full over a shorter amount of time. Notwithstanding the foregoing, however, if the actual principal amount of the Loan calculated as provided in Section 8.01 above is less than the estimated principal amount of the Loan as set forth in Section 8.01, the parties to this Agreement hereby agree to adjust the Loan Payment Schedule in such a way as to not adversely impact any obligations of the Bank secured by repayments under this Agreement.

Loan Repayments shall be credited first to interest accruing on the principal amount of the Loan, if any, then to principal.

8.05 CREDIT ENHANCEMENT.

The Borrower shall hold the Credit Enhancement for the benefit of the Bank until the fifth (5th) anniversary of the closing date (such period of time being the "Credit Enhancement Period"). During the Credit Enhancement Period, the Bank may submit request to the Borrower to, and upon receipt of such request the Borrower shall, transfer an amount of the Credit Enhancement to the Bank equal to the amount of any Unrecoverable School Loan Losses incurred prior to the fifth (5th) anniversary of the closing date.

ARTICLE IX – MISCELLANEOUS

9.01 EQUAL EMPLOYMENT OPPORTUNITY.

In connection with the carrying out of any project, the Borrower shall not discriminate against any employee or applicant for employment because of race, age, creed, color, sex or national origin.

9.02 PROHIBITED INTERESTS.

Neither the Borrower nor any of its contractors, subcontractors, consultants, or subconsultants shall enter into any contract with one another, or arrangement in connection with the Project or any property included or planned to be included in the Project, which violates any provision of the Nevada Revised Statutes, relating to conflicts of interest and prohibited transactions. The Borrower shall further diligently abide by all provisions of Nevada law regulating the Borrower with respect to procurement, contracting, and ethics.

9.04. ADHERENCE TO 2020 STATE CLIMATE STRATEGY.

Execution of this Agreement constitutes a certification by the Borrower that it will use commercially reasonable efforts to carry out the Project in conformance with all applicable regulations of the Bank, including using commercially reasonable efforts to ensure that all charter school facilities financed through the Project are consistent with the standards and goals set forth in Nevada's Climate Strategy for the year of 2020 and the goals for the reduction of greenhouse gas emissions set forth in NRS 445B.380 and 704.7820.

The Borrower will be solely responsible for any liability in the event of non-compliance by the Borrower with applicable regulations and will reimburse the Bank for any out-of-pocket loss incurred in connection with any direct non-compliance by the Borrower.

9.05 PREVAILING WAGES.

Execution of this Agreement constitutes a certification by the Borrower that it will use commercially reasonable efforts to carry out the Project in conformance with all applicable provisions of NRS Chapter 408 including the payment of prevailing wages.

The provisions of NRS 338.013 to 338.090, inclusive, apply to any contract for construction work on the Project, if any. The Borrower will direct any contractor who is awarded a contract or enters into an agreement to perform construction work related to the Project, and any subcontractor who performs any portion of any construction work on the Project, to comply with the provisions of NRS 338.013 to 338.090, inclusive, in the same manner as if a public body had undertaken the qualified project or had awarded the contract.

The Borrower will be solely responsible for any liability in the event of non-compliance by the Borrower with this section and will reimburse the Bank for any out-of-pocket loss incurred in connection with any direct non-compliance by the Borrower.

9.06 LOCAL HIRE AND APPRENTICESHIP UTILIZATION.

Execution of this Agreement constitutes a certification by the Borrower that it will use commercially reasonable efforts to carry out the Project in conformance with all applicable regulations of the Bank including the hiring of Nevada residents and the utilization of registered apprentices on any construction projects.

The Borrower will use commercially reasonable efforts to ensure that for each charter school project that is financed through the Nevada Facilities Fund, not less than 50 percent of the total project work hours performed within each construction trade by employees of a contractor or subcontractor are performed by residents of Nevada, with not less than 15 percent of those project work hours performed within each construction trade by employees of the contractor or subcontractor being performed by disadvantaged workers.

If the Borrower is unable to comply with the project work hour requirements set forth in this section, the Borrower may petition the Bank for an exemption from these requirements of this section. Upon receipt of such a petition, the Bank may exempt the Borrower from the requirements of this section if it is found that the inability of the Borrower to comply with the requirements of this section is due to circumstances beyond the control of the Borrower.

The Borrower will be solely responsible for any liability in the event of non-compliance by the Borrower with applicable regulations and will reimburse the Bank for any out-of-pocket loss incurred in connection with any direct non-compliance by the Borrower.

9.07 NO OBLIGATION TO THIRD PARTIES.

Except to the extent set forth herein, neither the Bank nor the Borrower shall be obligated or liable hereunder to any person or entity not a party to this Agreement.

9.08 WHEN RIGHTS AND REMEDIES NOT WAIVED.

In no event shall the making by the Bank of any Disbursement to the Borrower constitute or be construed as a waiver by the Bank of any breach of covenant or any default which may then exist, on the part of the Borrower, and the making of such Disbursement by the Bank while any such breach or default shall exist shall in no way impair or prejudice any right or remedy available to the Bank with respect to such breach or default.

9.09 BONUS OR COMMISSION.

By execution of the Agreement the Borrower represents that it has not paid and, also, agrees not to pay, any bonus or commission for the purpose of obtaining an approval of its application for the Loan established hereunder.

9.10 INDEMNITY.

To the extent allowed by law, the Borrower shall indemnify, defend, and hold harmless the Bank and all of its officers, agents, and employees from any claim, loss, damages, cost, charge, or expense arising out of any act, error, omission, or negligent act by the Borrower, its agents, employees, contractors and/or subcontractors during the performance of the Agreement, except

that neither the Borrower, its agents, employees, contractors and/or subcontractors will be liable under this paragraph for any claim, loss, damages, cost, charge, or expense arising out of any act, error, omission, or negligent act by the Bank, or any of its officers, agents, or employees, during the performance of the Agreement.

If the Bank receives notice of claim for damages that may have been caused by the Borrower in the performance of services required under this Agreement, the Bank will immediately forward the claim to the Borrower. The Bank's failure to promptly notify the Borrower of a claim will not act as a waiver or any right herein.

9.11 PLANS AND SPECIFICATIONS.

In the event that this Agreement involves the purchasing of capital equipment or the constructing and equipping of a facility, the Borrower shall design and construct the equipment and/or facility in accordance with the standards applicable to the Borrower. Failure to follow the plans and specifications shall be sufficient cause for delays in the distribution of disbursements by the Bank.

9.12 PROJECT COMPLETION, BORROWER CERTIFICATION.

Upon completion of the Project, the Borrower will certify in writing that the Project (or expending of the Loan) was completed in accordance with applicable plans and specifications and that the Project is accepted by the Borrower as suitable for the intended purpose.

9.13 ENTIRE AGREEMENT.

The Financing application executed by the Borrower, all exhibits, attachments and schedules attached to the Financing Application, and this Agreement ("the Agreement Documents") sets forth the entire agreement between the parties and incorporate and supersede all prior negotiations, correspondence, conversations, agreements or understandings applicable to the matters contained herein and therein, and the parties hereto agree that there are no commitments, agreements or understandings concerning the subject matter of this Agreement that are not contained in the Agreement Documents. Accordingly, it is agreed that no deviation from the terms of the Agreement Documents shall be predicated upon any prior representation or agreements whether oral or written. It is further agreed that no modification, amendment or alteration in the terms and conditions contained in the Agreement Documents shall be effective unless contained in a written document executed by the parties hereto.

It is further agreed that the Bank will have no obligation to honor any request for disbursement made by the Borrower or otherwise make any disbursement under this agreement in the event that the Bank has notified the Borrower that an event of default has occurred under this or any other agreement between the Borrower and the Bank, or if the Bank, in its sole discretion, determines that events have occurred which substantially diminish the likelihood that the Borrower will timely and fully honor its obligations under this agreement or any other agreement between the Bank and the Borrower. Any waiver of this provision by disbursement following an event of default by the Borrower under the terms of this agreement, or any other agreement between the Borrower and the Bank, will not constitute a continuing waiver of this provision and the Bank may refuse to make further disbursements without any liability to the Borrower whatsoever.

In the event of conflict between the terms and conditions of the Agreement Documents: (i) the terms and conditions contained in the body of this Agreement prevail over conflicting terms and conditions contained in any exhibits, schedules and attachments attached to this Agreement; (ii) the terms and conditions contained in the body of the Financing Application prevail over any conflicting terms and conditions contained in any exhibits, schedules and attachments attached to the Financing Application; and (iii) the terms and conditions of the Agreement, including all exhibits, schedules and attachments hereto, prevail over conflicting terms and conditions contained in the Financing Application and any exhibits, schedules and attachments thereto.

9.14 NOTICES.

Any notice, demand, request or other instrument which is required to be given under this Agreement in writing shall be delivered to the following addresses and/or via email:

If to the Bank: Nevada State Infrastructure Bank
555 East Washington Avenue, Suite 5200
Las Vegas, Nevada 89101

If to Borrower: Opportunity 180
11035 Lavender Hill Dr.
Suite 160-180
Las Vegas, Nevada 89135-2903

[Signature Pages Follow]

ARTICLE X - EXECUTION OF AGREEMENT

This Agreement shall be executed in three or more counterparts, any of which shall be regarded as an original and all of which constitute but one and the same instrument.

IN WITNESS WHEREOF, the Bank has caused this Agreement to be executed on its behalf by its Secretary and the Borrower has caused this Agreement to be executed on its behalf by its Authorized Representative and by its affixed seal. The effective date of this Agreement shall be the Agreement Date.

NEVADA STATE INFRASTRUCTURE BANK

Chair of the Board of Directors	Legal

OPPORTUNITY 180

EXHIBIT A

Disbursement Schedule Form

Total Bank Loan Amount: $15,000,000

Total Bank Commitment: $15,000,000

Bank Estimated Disbursement Schedule:

Date	Amount	Balance
Agreement Date	$7,500,000	$7,500,000
January 15, 2024	$7,500,000	$0

EXHIBIT B

Loan Disbursement/Repayment Schedule

PLEASE REFER TO PRO FORMA SPREADSHEET INCLUDED IN THE BORROWER'S FINANCING APPLICATION SUBMITTED TO THE BANK AND THE BOARD APPROVED TERM SHEET IN EXHIBIT C.

EXHIBIT C

Summary Project Specifications

On August 26, 2022, Opportunity 180 ("Borrower", an education focused non-profit organization based in Las Vegas, Nevada, submitted a Financing Application to the Nevada State Infrastructure Bank requesting a loan of $15,000,000 from the Bank's Charter School Capital Needs Revolving Account, to establish the Nevada Facilities Fund ("NVFF") in partnership with the Equitable Facilities Fund.

The NVFF will function as a revolving credit facility designed to substantially reduce financing expenses for high-quality public charter schools and create educational opportunities in low-income communities.

The Borrower with utilize the Bank's $15,000,000 to leverage an additional $85,000,000 of private philanthropy and tax-exempt bond financing. The Borrower seeks to establish a $100,000,000 revolving loan fund to support 7,500 additional seats in high-quality public charter schools located in the communities with the greatest level of need.

Approximately 70% of students attending schools supported by NVFF will identify as people of color and approximately 70% qualify for free or reduced-price lunch.

Funds to repay the Bank's $15,000,000 loan will be generated from payments from charter school operators that receive NVFF loans. All administration of future loans, including loan sourcing, underwriting, approval, closing, and servicing processing will be performed by the Borrower and the Equitable Facilities Fund.

NVFF Project Loan Terms

Lender:	Nevada State Infrastructure Bank
Borrower:	Opportunity 180
Loan Amount:	$15,000,000
Loan Purpose:	Loan proceeds will be leveraged to support the launch of the Nevada Facilities Fund, a revolving credit facility designed to substantially reduce financing expenses for high-quality public charter schools and create additional educational opportunities in low-income communities.
Maturity Date:	20 years
Security:	Unsecured general obligation of the borrower
Interest Rate	Fixed rate of 1.5% per annum
Disbursement:	Two $7,500,000 disbursements. First disbursement upon loan closing, and second disbursement on January 15, 2024.

Additional Sources of Funding:	Borrower will secure additional philanthropic funding and low-cost debt financing to support NVFF lending activity. Target initial leverage amount will be $85,000,000, to support a total of $100,000,000 in charter school loans.
Terms of Repayment:	Borrower shall make annual interest-only payments of 0.01% of the outstanding loan balance until the Maturity Date set forth in this Exhibit C. A balloon payment equal to the principal balance of the Loan Amount and accrued but unpaid interest will be due at the Maturity Date set forth in this Exhibit C.
Bank Loan Origination Fee:	$150,000 due at the time of loan closing.

NVFF Administration:	The NVFF will be administered by the Borrower in conjunction with the Equitable Facilities Fund ("EFF"), a 501c3 non-profit organization that has a mission to reduce facilities expenses for high-performing charter schools nationwide. The Borrower and EFF will deliver end-to-end administration, including all charter school loan sourcing, underwriting, approval, closing, and servicing processes. Borrower will be responsible for adhering to all regulations and reporting requirements established by the Bank.
Reporting:	Borrower will submit quarterly reports to Bank as required by Section 2.04. Reports will include total number of loans and financing amounts committed by the NVFF; academic, financial, and demographic characteristics of the charter school obligors; and progress toward NVFF investment and school performance goals aligned upon by the Borrower and Bank.

Nevada State Infrastructure Bank

Financing Application

Nevada State Infrastructure Bank Overview:

The Nevada State Infrastructure Bank was established to provide low-cost financing to Nevada state agencies, local governments, Tribal governments, and non-profit organizations for priority infrastructure projects.

Pursuant to Chapter 408 of the Nevada Revised Statutes, the Bank can provide financing for a variety of infrastructure projects, including: transportation facilities, utility infrastructure, digital infrastructure, recycling and sustainability infrastructure, renewable energy infrastructure, social infrastructure, water and wastewater infrastructure, and other infrastructure related to economic development.

The Bank has been capitalized with an initial $75 million in State general obligation bonds, which will be expended in the following project categories within the Nevada State Infrastructure Bank Fund:

- $40 million for projects through the Federal Infrastructure Matching Account;
- $20 million for projects through the Affordable Housing Revolving Account; and
- $15 million for projects through the Charter School Capital Needs Revolving Account.

In evaluating applications, the Bank will also seek to leverage outside capital and federal funding to help finance projects that improve quality of life, strengthen Nevada's climate resiliency, and help to promote a strong economy for communities across the State.

Application Instructions:

Please complete all sections of the application below and attach any required exhibits to request financing from the Nevada State Infrastructure Bank.

Prior to applying to the Bank for financing, please familiarize yourself with all the statutes and regulations governing the operation of the Bank.

The relevant statutory provisions can be found in Chapter 408 of the Nevada Revised Statutes (NRS 408.55048 – 408.55088).

Additionally, the approved regulation governing the Bank provides clarity on the application process as well as the requirements set forth for projects eligible under the Federal Infrastructure Matching Account, the Affordable Housing Revolving Account, and the Charter School Capital Needs Revolving Account.

Once submitted, applications for financing will be vetted by staff of the Bank and may be presented to the Board of Directors of the Nevada State Infrastructure Bank for consideration.

Completion of an application does not guarantee funding for a project.

Once complete, all applications can be submitted via email or mailed to:

Erik Jimenez
Chief Policy Deputy, Nevada State Treasurer's Office
Secretary to the Board of Directors of the Nevada State Infrastructure Bank

Nevada State Capitol
101 North Carson Street, Suite 4
Carson City, Nevada 89701
ejimenez@nevadatreasurer.gov

Part 1: Applicant Information

Legal Name of the Applicant:

Opportunity 180

Type of Applicant:

☐ Governmental Unit

☐ Indian Reservation or Colony

■ Private Non-Profit Organization created for charitable or educational purposes

If applicant is a governmental unit or non-profit organization, please explain:

Opportunity 180 is a 501(c)3 non-profit organization. We operate towards a North Star that ensures every kid graduates from high school college and career ready. We believe every kid should finish high school prepared and inspired to reach their most ambitious dreams and plans. That's why we look to invest in innovative ideas and bold leaders, empower families and community partners to advocate for quality education and work throughout Nevada to re-imagine teaching and learning in order to help every student succeed. We believe all kids should have access to high-quality, free public education.

Mailing Address of the Applicant:

Street Address: 11035 Lavender Hill Drive, Ste 160-180

City, State, Zip Code: Las Vegas, NV 89135

Name of the Individual Submitting this Application:

Jana Wilcox Lavin

Role/Title of the individual submitting the application:

CEO

Address for the individual submitting the application:

Street Address: 732 S 6th St, Suite 200D

City, State, Zip Code: Las Vegas, NV 89101

Email for Individual submitting the application:

jana@opportunity180.org

Phone number of individual submitting this application:

702-750-9777

Please list the contact information (Name, Address, Phone, Email) for other authorized individuals associated with the project (i.e., consultants, advisors, engineers, attorneys, etc.)

Name: Miles Dickson Organization: Opportunity 180 Street Address: 732 S 6th St, Suite 200 D City, State, Zip: Las Vegas, NV 89101	Title: Board Chair Phone: (702) 580-6614 Fax: E-mail: milesrdickson@gmail.com
Name: Mike McGregor Organization: Equitable Facilities Fund Street Address: City, State, Zip:	Title: Chief Operating Officer Phone: (202) 746-8099 Fax: E-mail: mike@eqfund.org
Name: Shawn McCormack Organization: Equitable Facilities Fund Street Address: City, State, Zip:	Title: Investment Principal Phone: (617) 935-3406 Fax: E-mail: shawn@eqfund.org
Name: Ray Fraser Organization: Opportunity 180 Street Address: 732 S 6th St, Suite 200 D City, State, Zip: Las Vegas, NV 89149	Title: Director of Operations Phone: (702) 581-9588 Fax: E-mail: ray@opportunity180.org

Part 2: Financing Requested

What type of financial assistance is the Applicant seeking? (Please select all that apply)

- [x] Loan
- [ ] Grant
- [ ] Other Financial Assistance

Financing Amount Requested:

$15,000,000

Is the State Infrastructure Bank origination fee included in financing? (Please reference the regulations governing the Nevada State Infrastructure Bank)

- [ ] Yes
- [x] No

Financing term requested (Number of years):

20 years

Source of financing repayment:

- [x] Enterprise Fund
- [ ] Special Fund
- [ ] General Fund Lease
- [ ] Assessment District
- [ ] Special Taxes/Property Related Assessments
- [ ] Voter approved general obligation debt
- [ ] Other

Please explain the source(s) of financing repayment:

Loan repayments from NVFF's charter school borrowers will be used to repay the SIB financing.

Part 3: Project Information

Project Name:

Nevada Facilities Fund

Project Address:

Street Address: 732 S 6th St, Ste 200 D

City, State, Zip Code: Las Vegas, NV 89101

Project Category (Please reference Chapter 408 of the Nevada Revised Statutes):

- ☐ Transportation Facility
- ☐ Utility Infrastructure
- ☐ Water and Wastewater Infrastructure
- ☐ Renewable Energy Infrastructure
- ☐ Digital Infrastructure
- ☐ Recycling and Sustainability Infrastructure
- ■ Social Infrastructure
- ☐ Other Infrastructure related to Economic Development

If the project category selected was "Other Infrastructure related to Economic Development" please explain the project:

N/A

Is the project located in any of the following? (Please select all that apply)

☒ In a qualified census tract as designated by the United States Secretary of Housing and Urban Development pursuant to 26 U.S.C. § 42(d)(5)(B)(ii)

☒ In a census tract which has a high level of social vulnerability as determined according to the Social Vulnerability Index developed by the Centers for Disease Control and Prevention of the United States Department of Health and Human Services

☒ In a community which has a large percentage of the population having limited English proficiency

☒ In a community that has been subject to historical instances of redlining, segregation or other discriminatory practices

Is any part of the proposed project located on Tribal land?

☐ Yes

☑ No

Please attach a detailed description of the project. If the funding request is limited to a portion of the project, please identify as appropriate. If you have a feasibility study, a capital improvement plan, environmental study, or other such reports containing a detailed description of the project, please include as appropriate.

Attach all necessary documents as Exhibit 1. [Please label and attach items as Exhibits 1a, 1b, 1c, etc.]

If funding for the project is approved by the Nevada State Infrastructure Bank Board of Directors, how long will it take for this project to be completed?

Between late 2022 and the end of 2027, NVFF loan proceeds will be leveraged 10x with philanthropic capital and tax-exempt bond proceeds to support at least $100M of low-cost loans for charter schools throughout the state.

Please list applicable permits for the project:

Type of Permit (Please include permit number)	Granting Authority	Date Submitted	Date Received	Expiration Date
N/A				

Please complete the attached Project Sources and Uses of Proceeds Table (located on page 22 of this document) as Exhibit 2. Attach any and all cost estimates, bids, project labor agreements, and construction contracts, if available. [Please label and attach them as Exhibits 2a, 2b, 2c, etc.]

Please provide for any and all documentation commitment(s) for project funding sources other than financing from the State Infrastructure Bank. This could include resolutions, grant agreements, loan agreements, contracts, etc. [Please label and them as Exhibit 3 – if multiple documents are needed, please label and attach as Exhibits 3a, 3b, 3c, etc.]

Is land acquisition a component of the project?

☐ Yes

☑ No

If yes, please provide a copy of the purchase agreement as Exhibit 4. Include a description of the land that has been or will be acquired (current owner, address, assessor's parcel number, purchase date or expected purchase date, cost or estimated cost), and identify the funding source(s) for the land below:

N/A.

Does the applicant already own the land needed for the project?

☐ Yes

☑ No

Please provide a comprehensive project timeline as Exhibit 5. Include specific project milestones such a preliminary engineering report, all required permits, design, engineering, land/right-of-way acquisition, preparation of bid documents, awarding of construction contract, construction start date, construction completion date, and the date that the project will become operational.

Private Activity - Will any entity, including a governmental entity other than the Applicant, use or directly benefit from any portion of the Project other than as a member of the general public? (For example, will a private entity or a federal agency operate, or lease space in the proposed project?)

■ Yes

☐ No

If yes, please describe the entity that will use or otherwise benefit from the Project. Provide a copy of the agreement(s) with such private entity, or federal agency. [Please label and attach as Exhibit 6.]

The sole beneficiaries of the Nevada Facilities Fund will be charter schools in the State of Nevada. This fund will provide highly affordable facilities financing to support high-quality public school growth and sustainability. On average, individual loans to school obligors will save schools over $2M over the loan term.

Will financing be used to finance more than 5 percent of any private activity costs?

☐ Yes

☑ No

If yes, please explain:

N/A

Business Relocation – Will the proposed Project require the relocation of a private sector business from one area of the State to another?

☐ Yes

☑ No

If yes, please provide a justification to support the move:

N/A

Please describe any economic and/or community benefits that will result from the completion of this project. Please include the method, or calculation by which these results were identified:

A $15M loan from the SIB will seed $100M of low-cost financing that will support 7,500 high-quality public school seats in communities that need them most. Approximately 70% of students attending schools supported by NVFF will identify as people of color and approximately 70% will qualify for free or reduced-price lunch. We anticipate over 90% of schools will outperform their host districts.

Further, NVFF will provide public charter schools with the most affordable long-term facility financing solution available. The fund will offer rates in the 4% range, with some variation depending on school credit profiles and the macro interest rate environment Traditional charter school lenders offer 5-10% in addition to onerous equity and reserve fund requirements. We anticipate at least $2M of savings per school over each loan term. These savings will be redeployed to maximize the resources schools can use to support learning and student development.

What are the total number of jobs that will be created and the average wage for the project? (Please include the method or calculation by which these results were identified)

The Nevada Facilities Fund is projected to create 948 jobs over the first five years of the fund's operations. The jobs created are broken down into two categories:

1. 688 Construction jobs, both direct and indirect.

NVFF to close two loans a year for a total of ten projects funded in its first five years. We project four out of these ten financings will fund construction projects. The estimated cost of these four projects is approximately $45 million.

The Economic Policy Institute employment multiplier report recommends 5.45x direct jobs and 9.68x indirect jobs per $1 million of project costs per a construction project.

Thus we project the four projects will create 688 new construction jobs in Nevada. The average wage will be consistent with prevailing wage requirements for public development projects.

2. 260 education jobs.

The average charter school in Nevada with a $10 million facility project will grow to serve approximately 750 students. Assuming the average class size is 20 students, then each school has at least 37 classroom teachers and 5 specials teachers for a total of 42 teachers. Additionally, school administration and non-teaching personnel will add another 10 positions for a total estimate for 52 jobs per school. This equates to a projected total of 520 jobs supported across 10 schools.

On average, schools will be at 50% of their total enrollment levels at the time of financing; thus we project NVFF will create 260 new education jobs over five years. The starting salary of a Clark County School District classroom teacher is $51,000.

What are total number of jobs retained and the average wage? (Please include the method or calculation by which these results were identified)

Based on the projections enumerated above, 260 existing education jobs will be retained over the next five years. The starting salary of a Clark County School District classroom teacher is $51,000.

Describe the environmental impact that will result from this project? (Please include the method or calculation by which these results were identified)

All projects financed by the Nevada Facilities Fund will adhere to all applicable local, state, and federal environmental codes and regulations.

Does this project comply with the with the standards and goals set forth in the 2020 Nevada Climate Strategy and the goals for the reduction of greenhouse gas emissions set forth in NRS 445B.380 and 704.7820?

- [x] Yes
- [ ] No
- [ ] Unsure

Useful Life - Please provide evidence detailing the useful life of the Project. Useful life is defined as the estimated number of years the project is anticipated to remain in service. Please include estimated useful life projections with and without any anticipated maintenance costs. [Label and attach as Exhibit 7]

Is this project eligible to apply for funding from the Affordable Housing Revolving Account within the Nevada State Infrastructure Bank Fund? (Please reference the Nevada State Infrastructure Bank regulations for the guidelines and policies for the Affordable Housing Revolving Account.)

- [ ] Yes
- [x] No
- [ ] Unsure

Is this project eligible to apply for funding from the Charter School Capital Needs Revolving Account within the Nevada State Infrastructure Bank Fund? (Please reference the Nevada State Infrastructure Bank regulations for the guidelines and policies for the Charter School Capital Needs Revolving Account.)

- [x] Yes
- [ ] No
- [ ] Unsure

Is this project eligible to apply for funding from the Federal Infrastructure Matching Account within the Nevada State Infrastructure Bank Fund? (Please reference the Nevada State Infrastructure Bank regulations for the guidelines and policies for the Federal Infrastructure Matching Account.)

☐ Yes

☑ No

☐ Unsure

Is this project eligible to apply for funding from the State Infrastructure Bank General Account within the Nevada State Infrastructure Bank Fund? (Please reference the Nevada State Infrastructure Bank regulations for the guidelines and policies for the State Infrastructure Bank General Account.)

☐ Yes

☐ No

☑ Unsure

Part 4: Financial Information

Please provide copies of the five most recent fiscal year-end audited financial statements for the applicant and related parties to the project, if not already provided, as well as applicable revenue projections and cash flows. [Label and attach as Exhibits 8a, 8b, 8c, etc.]

Please provide the current year's adopted budget as Exhibit 9.

Are there any events or circumstances that have occurred since the date of the last financial statement could materially affect the overall financial condition of the Applicant?

☐ Yes

☑ No

If yes, please explain:

N/A

In the table below, please list all outstanding financing obligations (debts, notes, capital leases, etc.) secured by the source of repayment for the requested financing. Attach as Exhibit 10, and include a copy of all financing documents (e.g., the official statement along with any underlying loan agreements, lease agreements, or indentures, etc.) [Label and attach as Exhibits 10a, 10b, 10c, etc.]

Name of Lender	Date of Debt	Outstanding Balance (as of_____)	Maximum Annual Debt Service/Lease Payment
N/A		$	$
		$	$
		$	$
		$	$

Please provide a description of any off-balance-sheet debt obligations, including capital leases and other contractual obligations:

N/A

Has the Applicant defaulted on any debt or other obligation including, but not limited to, bonds, leases, or loans within the last ten years?

☐ Yes

☑ No

If yes, please specify the date(s) and circumstances:

N/A

Please attach as Exhibit 11 the current Capital Improvement Plan. Explain below any expected plan for future debt issuance:

N/A

Does the Applicant have an Inter-fund Transfer Policy?

☐ Yes

☑ No

If yes, please attach a copy of the policy as Exhibit 12.

Is the Applicant planning on utilizing any collateral in order to receive a loan or other financial assistance?

☐ Yes

☑ No

If yes, please explain:

N/A

Part 5: Loan Proceeds

Will the loan proceeds pay for any general administration or overhead costs?

☐ Yes

☑ No

Have any general administration or overhead costs already been incurred?

☐ Yes

☑ No

If yes, please explain:

N/A

Will the Project include the payment of prevailing wages as set forth in NRS Chapter 408?

☒ Yes

☐ No

Will loan proceeds finance preliminary costs for the Project?

☐ Yes

☑ No

Have any preliminary costs already occurred?

☐ Yes

☑ No

If yes, please explain:

Part 6: Legal Information

Please describe the composition of the Applicant's governing body, including the number of positions, term, and the selection/appointment process. Additionally, please provide a current list of individuals in these positions:

Opportunity 180 is governed by a 7-member Board of Directors. The Board of Directors meet quarterly and directly supervise the CEO Jana Wilcox Lavin. The Board Chair, Miles Dickson, has been heavily involved in the development of this project.

Board Chair - Miles Dickson
Treasurer - Monica Moradkhan
At large - Paula Sneed
At large - Sebern Coleman
At large - Nick Portz
At large - Piper Overstreet
At large - Mike Mullin

Please describe any pending or anticipated litigation and/or contractual disputes that the Applicant is a party to:

N/A

Please describe any past, present, or potential issues or controversies that may impact the Project:

N/A

For any applicant that is a Charter City, please attach as Exhibit 13 a copy of the City's Charter including all addendums and supplements thereto.

For any applicant that is a School District, Special District, or Joint Powers Authority (JPA), please provide the statutory citation of formation authority or attach a copy of all formation documents and amendments as Exhibit 14.

For any applicant that is a non-profit organization, please provide as Exhibit 15, a copy of the following:

a. Articles of Incorporation, together with all amendments.

b. Certificate of Status/Good Standing in the State of Nevada.

c. Bylaws, together with all amendments.

d. 501 (c)(3) Determination Letter(s) from the IRS, and any related documents and correspondence with/from the IRS.

e. All Form 990s for the last three years

f. All Form 990-Ts for the last three years.

g. Capital Campaign brochures, forms, pledge cards, and related materials, if any.

I acknowledge that:

All information submitted to the Nevada State Infrastructure Bank is true and correct at the time of submission, and such information does not contain any untrue or misleading statement of a material fact or omits to state any material fact necessary to make the statements contained herein not misleading.

By signing below, I acknowledge that I understand that it is unlawful to knowingly make a false claim, a false statement, use a false of fictitious name, or obtain money or benefit under false pretenses. I understand these acts are a violation of the laws of the State of Nevada punishable by civil penalties, including repayment, and/or criminal penalties including up to a category D felony and six years in state prison.

Print Name: Jana Wilcox Lavin

Print Title: CEO

Authorized Signature: 

Date:8/26/2022

Application Checklist

(Complete and submit with the Financing Application)

SIB Staff Use	INDICATE WHETHER OR NOT EACH DOCUMENT IS ATTACHED TO THIS APPLICATION			APPLICATION EXHIBITS	
Date Rec'd	***YES***	***NO***	***N/A***		
	X			Application	Signed and Dated
	X			Exhibit 1	Study, Plan, or Other Report with Detailed Project Description
	X			Exhibit 2	Sources and Uses of Proceeds Table
	X			Exhibit 2a	Detailed cost estimates, bids, and construction contracts, that support Exhibit. Label each Exhibit a, b, c, etc.
			X	Exhibit 3	Documentation Demonstrating Commitment of Other Project Funding Sources (includes Applicant's contribution). Label each Exhibit a, b, c, etc.
			X	Exhibit 4	Real Estate Purchase Agreement
			X	Exhibit 5	Project Timeline
			X	Exhibit 6	Project Benefit Information
			X	Exhibit 7	Useful Life Exhibit
	X			Exhibit 8	Five (5) Years Audited Financial Statements [and any applicable revenue projections and cash flows]. Label each Exhibit a, b, c, etc.
	X			Exhibit 9	Current Year Adopted Budget
			X	Exhibit 10	Outstanding Financing Documents. Label each Exhibit a, b, c, etc.
			X	Exhibit 11	Current Capital Improvement Plan
			X	Exhibit 12	Interfund Transfer Policy/Reimbursement Agreement
			X	Exhibit 13	Charter City Information and Questionnaire
			X	Exhibit 14	Districts Formation Documents and Amendments
	X			Exhibit 15	Non-Profit Applicants Exhibits. Label each Exhibit a, b, c, etc.

Exhibit 2

SOURCES AND USES OF PROCEEDS TABLE

***(NOTE:** Please attach as Exhibit 2a, detailed cost estimates, bids, and construction contracts, etc. to support data provided in the table.)*

PROJECT USES	*PROJECT FUNDING SOURCES*						
	Estimated Life of the Project	**SIB**	**[Applicant]**	**Other**	**Other**	**Other**	**TOTAL**
Land Acquisition							
Building Construction/Renovation							
Construction Contingency							
Machinery/Equipment							
Engineering/Architectural/ Design/Permits/Environmental							
SIB Origination Fee			150,000				
Other:	30 years	15,000,000	96,586,304				111,586,304
Other:							
TOTAL		15,000,000	96,736,304				111,586,304

Please provide the justification in determining the useful life of the Project:

Standard useful life projected for public school facilities is 30-40 years. *Please note Applicant Funding Sources reflect amount projected through 2027. Applicant will seek to raise additional capital after 2027 to support ongoing NVFF loan-making. See Exhibit 2a for detail on cash flow scenarios.

Opportunity180°

Nevada Facilities Fund:

Leveraging the Nevada State Infrastructure Bank to Go Further for Kids



THE BIG PICTURE: Potential Collaborators

Nevada State Infrastructure Bank

Established in 2017 under the Nevada Treasurer's Office, the SIB is spurring an unprecedented commitment to improving our state's infrastructure, creating jobs, and promoting long-term, sustainable growth and prosperity – one key priority is a $15 million focus on public charter schools.

Opportunity 180

A Nevada nonprofit (501c3) dedicated to ensuring every kid has access to a great school that puts them on track to be college and career-ready, O180 operates as investors, facilitators, and connectors, working with the community to reach a shared North Star to ensure 100,000 more kids have access to a high-quality school in their neighborhood.

Equitable Facilities Fund

A national nonprofit (501c3) and social impact fund that seeks to transform capital access for schools and communities, Equitable Facilities Fund supports positive educational outcomes for students across the country by providing exceptionally affordable facility financing.

THE BIG PICTURE: Student Outcomes



Current State:

In Nevada, **over 128,374 kids attend schools where only 2 in ten students** are on grade level in reading and math.



By 2030:

100,000 more kids have access to a high quality seat in the neighborhoods that need them most.



North Star:

Every public school student graduates from high school college and career ready.

THE CHARTER SCHOOL FACILITY ISSUE

Issue:

More than **40,000 students in Nevada attend charter schools** and many more remain on waitlists. Public charter schools provide quality education options for communities that need them most, and Nevada's families are demanding more seats for their children. However, efforts to launch new schools are failing due to a lack of affordable long-term facilities, as **individual charter schools are responsible for financing their own facilities**.

Goal:

Ensure every kid has access to a great school in their neighborhood that puts them on the path to be college and career ready to live the life they dream.

Approach:

Increase the number of kids in high-quality public charter schools serving students most in need across Nevada, aligned to the SPCSA needs assessment and Opportunity 180's school quality map and ensuring more money into classrooms.

THE SOLUTION: Equitable Financing for Quality Schools

Seed Investments can come in the form of government or philanthropic contributions

$15M
State Infrastructure Bank Investment

$5M
Local Philanthropy

Grant contributions are leveraged **7x** with external funding

$80M
National Philanthropy & Bond Investments

$100M
Revolving Loan Fund

- *Produces $20M school savings*
- *7,500 high-quality seats*
- *Funds recycle to support more schools & students over time*

Match will come from pre-committed philanthropy & low-cost debt issued by a national nonprofit

The Model

- All contributions and loans will be made to Opportunity 180, which in turn will make a PRI into the Equitable Facilities Fund (EFF), a 501(c)(3) tax-exempt charity with a mission to support schools that are creating educational opportunity for communities that need it most.
- SIB loan and philanthropy are leveraged with low-cost debt committed by a national non-profit.
- 100% of NVFF loans and funds will be held in trust, and loan repayments will be recycled to support Nevada classrooms in perpetuity.

Fund Administration & Maintenance

- NVFF Administration Team will comply with all SIB regulations.
- EFF will deliver end-to-end administration, including all charter school loan sourcing, underwriting, approval, closing, and servicing processes.
- Quarterly reports submitted to Lender.

BENEFITS & IMPACT: Nevada Facility Fund

Community	Schools	State

• 7,500 high-quality public school seats in communities that need it most
• Schools, on aggregate, serve >70% students of color
• Schools, on aggregate, serve > 70% students who qualify for FRL
	• Access, assistance and low-costs will incentivize the addition of quality public school seats
	• The most affordable long-term facility financing solution available to charter schools
	• The fund offers rates in the 4% range. Traditional lenders offer 5-10% in addition to onerous equity and/or reserve fund requirements.
	• Schools save approximately $100K per year or more than $3M over the life of a loan.
	• No equity required from schools.
		• NVFF and State will align on key fund performance metrics. tate sets criteria
		• State attains up to 7x initial leverage on investment, more over time as funds recycle
		• Reliable, expert partners to vet and deploy investments
		• Complete reporting and transparency
		• Fund will recycle and remain within Nevada to support schools in perpetuity.
		• Assurance that loans given to schools that:
		  ◦ Have strong current and projected financial performance
		  ◦ Have demonstrated success in serving low-income students
		  ◦ Have high-quality leadership, board members, and governance practices
		  ◦ All public charter school seats are independently operated or in partnerhsip with a non-profit CMO

Opportunity180

Equitable Facilities Fund

Jana Wilcox Lavin
CEO
jana@opportunity180.org

Mike McGregor
COO
mike@eqfund.org

Miles Dickson
Board Chair

Shawn McCormack
Investment Principal

The NVFF Administration Team will also include the Director of Operations from O180 and Two Investment Analysts from EFF

APPENDIX:
O180's Strategy

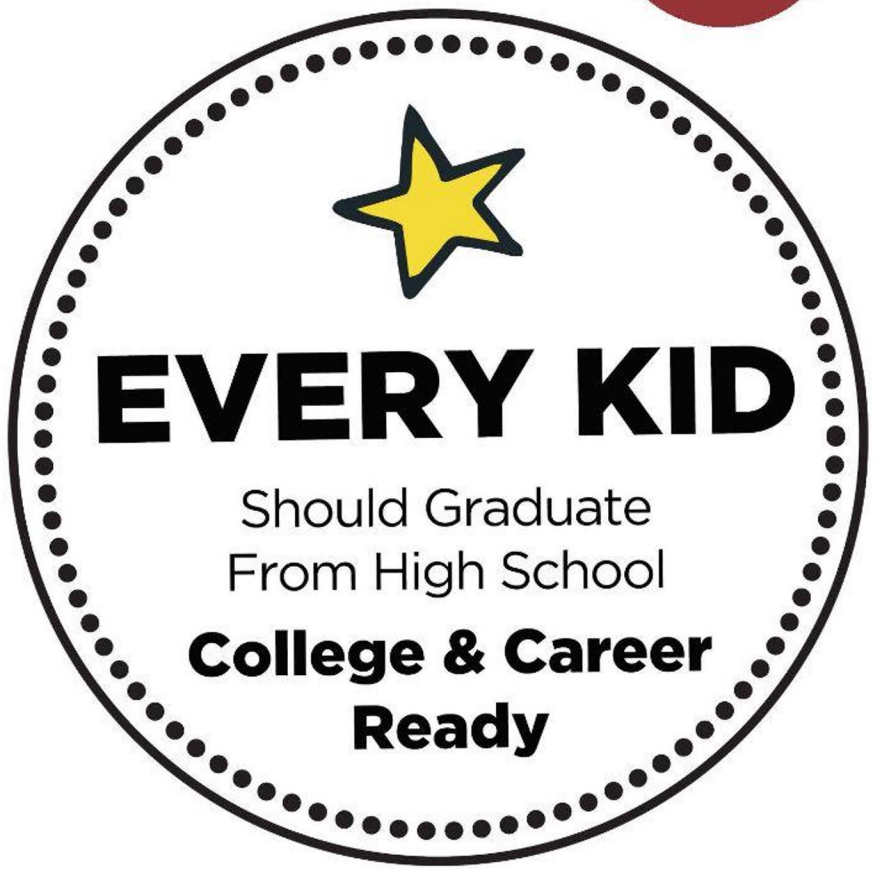



GOOD GOVERNANCE

Ensuring student-centered governance practices are leveraged among decision-makers



GREAT IDEAS IN ACTION

Activating education leaders and entrepreneurs to improve educational opportunities for kids



GOOD DATA

Creating a common language on school performance through the use of data



ENGAGED COMMUNITY

Elevating student and family voice in the solutions of educational challenges



MORE GREAT SCHOOLS

Ensuring every student has a great school in their neighborhood

APPENDIX: Opportunity 180's Work

O180 Area of Focus	Goal	Our Work In Action
More Great Schools	Ensuring every student has a great school in their neighborhood	➢ Investments in public charter and district schools resulting in 19,000+ more quality seats since 2018, serving 97% students who qualify for FRL.
Good Governance	Ensuring student-centered governance practices are leveraged among decision-makers	➢ Charter school board matching/connection program
Great Ideas In Action	Activating education leaders and entrepreneurs to improve educational opportunities for kids	➢ Fellowship programs and development opportunities have connected 150+ educators and high-potential school leaders ➢ High quality teacher retention and recruitment grants
Good Data	Creating a common language on school performance through the use of data	➢ Statewide School Quality Map ➢ Online Data Portal
Engaged Community	Elevating student and family voice in the solutions of educational challenges	➢ Parent Leadership Team ➢ Nevada Ed-Watch Series

APPENDIX: Equitable Facilities Fund's Work

60,000+ Students	EFF has invested in **120 schools** serving over **60,000 students** across the US.
$1 Billion + Invested	The fund is on track to provide over $1B of low-cost financing by early 2023.
70/80/90	Over **70% of students in EFF's portfolio qualify as low-income, 80% identify as people of color, and 90% of schools outperform their surrounding district**.
Diverse Expertise	The team is comprised of expert credit analysts, charter school executives, impact investors, and non-profit leaders.

Nevada Facilities Fund Credit Methodology

June 2022

The Nevada Facilities Fund (NVFF) is committed to making sure that the best schools have access to financing options that support long-term, sustainable futures. Our revolving fund offers short-term and long-term loans with low rates, minimal fees, no equity down and no debt service reserve requirements. Our partner schools are committed to delivering exceptional educational opportunities to low-income communities.

To qualify for loan consideration, a school must:

- Be a non-profit charter school or charter management organization
- Demonstrate strong academic results and excellent teaching and curricular practices
- Have at least one annual audit completed
- Commitment to serve under-resourced communities
    - NVFF aggregate portfolio strives to serve >70% students of color
    - NVFF aggregate portfolio strives to serve >65% students who qualify for FRL
- Have strong current and projected financial performance
    - Projected to achieve >60 days cash on hand
    - Projected to achieve >1.1x debt service coverage
- Have high-quality leadership, board members, and governance practices

NVFF will evaluate both mature and growth stage operators with the same selection considerations; however, NVFF will tailor the loan product and analysis required to the school profile. A summary of the risk rating factors that are used during the underwriting process are included in the following two pages.

Confidential - not to be used or distributed without consent of Equitable Facilities Fund

Nevada Facilities Fund Credit Methodology

Risk Rating Factors		Description of Evaluation
Charter Standing		**Weight - 10%**
1	Charter status & renewal history	How strong is the school's charter, in terms of length and number of charter renewals? Have authorizer evaluations been positive or have there been negative findings? Due to heightened risk of default for charter non-renewal or revocation, a rating of 2 or lower, will result in a credit override.
Academic Performance		**Weight - 20%**
2	Academic results	Is the school high quality? If available, how does authorizer rate school performance? Review ELA, Math and All Subject proficiency percentages for the school, district, and state for the prior three years in the aggregate, by highest grade served, by demographic subgroup and by the FRL population. If a school is not outperforming the district and state in absolute proficiency levels for the various populations analyzed for the academic assessment rating is student academic growth robust? Review NWEA MAP or other nationally normed growth scores as alternative academic performance measure. For high schools, how do students perform on standardized ACT and SAT tests? What is the school's four-year graduation rate? What are college acceptance and matriculation rates for its graduates? If verifiable public academic performance data is not available, review results from school's internal assessments.
3	Performance trends	Are academic results improving over time within a student cohort and for the school in the aggregate?
4	Student attendance rates	Does the school have a culture of attendance? ADA drives funding in many jurisdictions.
Demand		**Weight - 20%**
5	Historic enrollment compared to target	Has the school historically met its enrollment targets with a waitlist and/or applications exceeding available slots? For steady-state schools, has school maintained planned enrollment? For growing schools, has the school met its planned growth in enrollment?
6	Waitlist/applications	Does the school have a waitlist for acceptance and/or demonstrate demand from the number of applications for available seats?
7	Student retention rates	Does the school retain its students, measured from a fall-to-fall school start period? If not, are there mitigating circumstances, such family mobility in the population served?
8	Educational alternatives	How does the school compare to educational alternatives within its service area?
9	Community engagement & partnerships	Is the school reflective of community needs? How extensive is community engagement and outreach? Is there support from community organizations, both partners and funders? Specifically, is there support from local philanthropy, WFF (SchoolSmart) or CSGF?
Organizational Capacity		**Weight - 10%**
10	Board experience & independence	Does the school have an independent board that can provide oversight? Does it have the breadth of members (>5) and experience across disciplines to be effective?
11	Management strength	How experienced and deep is the management team? If a management company is used, what is its track record and scope of services? How robust is the strategic planning, are there clear measures of achievement that are consistently monitored?
12	Teacher effectiveness	• Does the school successfully retain its teaching staff? • How robust are the school's teacher recruitment practices? Does the school conduct outreach to diverse sources? How does the school's pay scale compare to the district's? • Does the school provide consistent feedback and training for teachers? • Does the school use its own assessments of student learning to modify curriculum and ensure academic growth? How does school employ such data during the course of the school year?

Confidential - not to be used or distributed without consent of Equitable Facilities Fund

Nevada Facilities Fund Credit Methodology

Financial Health		**Weight - 20%**
13	Annual revenues	Size of annual revenues is an indicator of a school's flexibility and capacity to weather downturns. *Total operating revenue + net non-operating revenue*
14	Financial trends & sustainability	Financial strength is an indicator of management strength and financial viability. What have been the financial trends over the past 3 years?
15	Excess margin	Excess margin measures the school's ability to generate revenue sufficient to meet annual expenditures, fund routine maintenance and service financial obligations. *[(Total revenues – total expenses) / total revenues)] x 100*
16	Historic lease-adjusted ADS coverage	Measures school's historic ability to service annual debt service from cash flow generated through operating and non-operating activities. *(Net revenue available for debt service + operating lease expense) / (ADS + operating lease expense)*
17	Projected lease-adjusted ADS coverage	Measures school's projected ability to service annual debt service from cash flow generated through operating and non-operating activities. *(Net revenue available for debt service + operating lease expense) / (ADS + operating lease expense)*
18	Lease-adjusted MADS coverage	Measures an institution's ability to service maximum debt payments from cash flow generated through operating and non-operating activities. Calculated for most recent audited historic year, current year and projection period. *(Net revenue available for debt service + operating lease expense) / (MADS + operating lease expense)*
19	Lease-adjusted ADS burden	The lease-adjusted ADS burden reflects the demand that a school's annual debt service has on total revenues. *[(ADS + operating lease expense) / total revenues] x 100*
20	Lease-adjusted MADS burden	The lease adjusted MADS burden reflects the demand that a school's maximum debt service has on total revenues. *[(MADS + operating lease expense) / total revenues] x 100*
21	Unrestricted days cash on hand	Unrestricted days cash on hand reflects a school's financial flexibility and capability to withstand operating challenges while still covering its operating expenditures. *Unrestricted reserves / [(total expenses – depreciation and amortization expense) / 365)]*
22	Unrestricted reserves to debt	Unrestricted reserves to debt measures a charter school's financial flexibility. *(Unrestricted reserves / total long-term debt) x 100*
Regulatory & Funding Environment		**Weight - 10%**
23	State statutory framework	What is the statutory framework within the state? Is there clarity surrounding school performance benchmarks and transparency regarding authorizer processes? Does the school provide financial, training or other support to the schools it authorizes?
24	Funding environment	Growth in per pupil funding and the existence of any dedicated facilities funding are the primary factors in the funding environment, with cash flow considerations a secondary factor. Base per pupil funding is defined as funding received for all students rather than specific funding received for certain populations, e.g. funding for special education.
25	Political environment	What is the political environment, at the state and local levels?
Project Risk		**Weight - 10%**
26	Construction Status	Is there construction risk in the project or is it a pure refinancing?
27	Availability of replacement schools	Can a replacement school be found should EFF's school borrower default and/or cease operations?
28	Additional debt/expansion	Does the school have significant expansion plans that will require additional debt? If so, will future enrollment growth be sufficient to accommodate additional borrowing?

Confidential - not to be used or distributed without consent of Equitable Facilities Fund

MEMORANDUM

TO: Zach Conine, Nevada State Treasurer
CC: Thomas Toepfer, PFM Financial Advisors, Erik Jimenez, Chief Policy Deputy
FROM: Miles Dickson & Jana Wilcox Lavin, Opportunity 180
Michael McGregor & Shawn McCormack, Equitable Facilities Fund
DATE: August 9, 2022
SUBJECT: Responses to Follow-up Questions to July 21, 2022 Meeting

---

Please see responses to your questions from August 2nd below. Thank you once again for your vision, commitment, and consideration of a transformative use of Nevada State Infrastructure Bank funds.

1. Would you be willing to provide a sample of active loan agreements, selected by the Nevada State Treasurer's Office (STO), for review?

Yes.

2. The adopted regulations for the Bank require all projects, except those for affordable housing, to begin some level of repayment within one year of after the origination of the loan. Would you be willing to consider periodic interest and/or principal payments rather than a ballooned payment at the end of the 20-year term?

Yes, a periodic debt service schedule is viable under certain scenarios. However, all interest and principal payments prior to maturity will reduce the fund's loan-making ability.

We suggest a small annual interest-only payment of .01% of the outstanding loan balance that would allow the initiative to meet the Bank's requirement while optimizing leverage and impact for students and schools. Please see the "Inputs" tab in the model to explore the impact of different Nevada State Infrastructure Bank ("NSIB") loan repayment schedules.

3. Would you please explain what assurances or commitments EFF has received relative to the philanthropic contributions referenced in the Sources & Uses and Cash Flow Pro Forma referenced during our discussion? Additionally, can you please provide an updated spreadsheet that includes the formulas that are used in the Sources & Uses and Cash Flow Pro Forma?

Over the first five years of the NSIB loan term, Opportunity 180 ("O180") and Equitable Facilities Fund ("EFF", and together "NVFF Administrators") estimate they will bring over $90M into the Nevada Facilities Fund ("NVFF") through a combination of contributions from local and national philanthropies totalling approximately $5.5M and net proceeds from low-yield bond issuances totalling approximately $85M. Adding the NSIB's $15M loan, the Fund's total capital sources will exceed $100M. All funds will be deployed in the form of low-cost charter school loans.

The NVFF Administrators have secured pledges from Nevada (local) philanthropies totalling $5.5M, which represents all philanthropic funding needed to achieve the proposed $100M+ fund. See the “$100M Fund” tab in the projections for more detail on this scenario.

Notably, the NVFF Administrators seek to raise at least another $400M of external capital and exceed $500M in cumulative lending by the end of the proposed loan term in 2042. This growth will require an additional $40M in philanthropic or concessionary capital, some portion of which EFF will provide from pre-existing sources. See the “$500M Fund” tab in the projections for more detail on this scenario.

While we are optimistic we will secure additional philanthropic funding by 2028, our proposal to NSIB is focused on the $100M Fund scenario in which we bring in over $90M of external capital to support over $100M of loans in the coming years.

4. Would EFF be willing to share loan application analysis with NSIB staff prior to approving a particular loan with the understanding that a loan not approved by the NSIB Board could not be funded with contributed capital from the NSIB, directly or indirectly?

NVFF will provide credit memos and other in-depth analyses that support loan-making decisions to the NSIB. However, we cannot commit to a third party approval requirement for any lender or investor - be it the NSIB, a family foundation or bond buyers - for every loan made by NVFF. We are fully committed to adhering to the NSIB’s regulations and criteria when making loans.

5. Would EFF be willing to consider a direct loan from the NSIB or, alternatively, to NVFF which we assume will be a Nevada partnership or LLC whereby O180 is a partner/member?

Our preference is for O180 to serve as the borrower given the organization’s strong local reputation and ability to cultivate a pipeline of high-quality prospective school borrowers in Nevada. We are open to discussing an SPE structure if it better meets the NSIB’s objectives.

6. Would O180 please share its most recent Form 990?

Yes -- see attached.

According to the S&P Rating Action Report provided for Austin Achieve Public Schools, EFF has a pledge of all operating revenue as well as a first-lien on school facilities in support of its bonds.

7. In the term sheet, O180 is the debtor to the NSIB, so what recourse would NSIB have in the event of default given that the contribution to EFF comes from O180?

As indicated in the proposed term sheet, the loan to O180 will be unsecured. The NSIB loan would absorb first loss and thereby support the terms, leverage, and low-yield capital from other investors that make this initiative possible.

The annual default rate in the charter school sector is approximately 3%, and EFF has made 48 loans nationally with no defaults. The EFF team follows comprehensive loan monitoring policies and procedures including an annual review process that will apply to all NVFF loans. Our goal is to always proactively work with schools to identify challenges and prevent them from causing defaults. While we expect similar success with the NVFF initiative, in an event of default EFF and O180 would own all remediatory efforts to facilitate loan loss recovery. In a worst case scenario, EFF would sell the facility or find a replacement tenant in order to recoup as much of the loan value as possible.

8. The NVFF will start with $20M in capital, a much lesser amount than $200M in corpus in the ESRF (Equitable School Revolving Fund). To leverage ~$16M annually in bonds from the NVFF as demonstrated in the Pro Forma, will bond issuances have a subordinate lien on the ESRF to ensure a higher credit rating and lower borrowing rate? Will monies be set aside for a debt reserve fund?

NVFF will live on ESRF's balance sheet, meaning the initiative will be capitalized with A rated bond proceeds that ESRF is able to issue because of the credit strength of its pooled, overcollateralized national fund. Senior bondholders have a pledge to loan revenues under ESRF's Master Trust Indenture, which will include monies generated from the repayment of NVFF loans. ESRF has already established a fully-funded debt service reserve fund, and any future contributions to the debt service reserve fund will be made with monies outside of the NVFF initiative.

9. The Official Statement provided notes all states participating in the issuance (AZ, CA, MA City of Albany) are using private activity bonds as conduit issuers with limited obligations payable solely from the amounts pledged. Please explain the structure of the terms between O180 and EFF, including how this differs from the typical structure using conduit issuers with limited obligations.

As a 501c3 borrower, ESRF accesses the tax-exempt bond market through conduit issuers. The bonds used to capitalize the NVFF initiative will be issued through the Arizona Industrial Development Authority (AZIDA).

As currently contemplated, the loan from O180 to EFF will come in the form of a Program Related Investment with a term that mirrors that of the loan from the NSIB to O180.

10. Would the loan from O180 be on parity with EFF's bonds?

No. The loan will be unsecured given the need for nonrecourse "first loss" capital to catalyze the NVFF initiative.

The bond proceeds that will potentially be used as a PRI to EFF were derived from State of Nevada Taxable General Obligation Bond, Series 2022B, which was self-designated as a "Social Bond" and carries certain reporting requirements based on representations made in the Official Statement.

11. To what extent would O180 and EFF be willing to provide the necessary loan, project and demographic data necessary to meet the 2022B Series social bond reporting requirements?

It would be helpful to know the NSIB's specific reporting requirements or expectations before committing to this, but we very likely are willing to do so. ESRF has issued more verified Social Bonds than any other borrower in the education sector and adheres to a set of reporting requirements that likely overlap with the NSIB's metrics.

The Bank requires all projects to conform to certain wage and labor standards including, the payment of state prevailing wage and apprenticeship utilization thresholds for projects. Additionally, projects through the Charter School Capital Needs Revolving Fund must utilize developer partners that have demonstrated a long-term commitment to register apprenticeships.

12. Can O180 and EFF provide us with a commitment that these labor standards will be required for all schools who receive funding through the Nevada Facilities Fund?

Yes. We will require all school borrowers to adhere to applicable labor and wage standards.

13. The Bank also has a stated goal in line with the President's Justice 40 Initiative, to ensure that 40% of all projects are located in disadvantaged communities. Can O180 and EFF provide us with the proposed locations of all potential projects that it expects to fund in the first two years of the Fund?

Yes. See below for a list of addresses for the current pipeline of prospective projects. O180 uses a priority foot print map to identify the location of schools that it works with. Future projects would be placed within the heat map, located here.

Phase I (2022-2023)	Location
Nevada Prep	1780 Betty Ln, Las Vegas, NV 89156
Nevada Rise	2525 Emerson Ave, Las Vegas, NV 89121
Equipo Academy	4131 E Bonanza Rd, Las Vegas, NV 89110
Democracy Prep	1201 W Lake Mead Blvd, Las Vegas, NV
Phase II (2024-2025)	**Location**
Futuro Academy	920 N Lamb Blvd, Las Vegas, NV 89110
Girls Empowerment Middle School	4220 S. Maryland Parkway, Bldg B LV, NV 89119
Explore Academy	3551 N Ferrell St. North Las Vegas, NV 89032
TEACH Las Vegas	4660 N Rancho Dr, Las Vegas, NV 89130

August 26, 2022 update

We have identified and begun preliminary discussion with 2 Northern Nevada schools. In addition, we are currently exploring schools in both rural and Northern Nevada.

NEVADA FACILITIES FUND
Sources & Uses and Cash Flow Pro Forma
Limited Philanthropy Scenario -- $100M+ Loans

	2023	2024	2025	2026	2027	2028	2029	2030	2031	2032	2033	2034	2035	2036	2037	2038	2039	2040	2041	2042
CAPITAL SOURCES & USES																				
SOURCES																				
SIB Loan (1)	15,000,000	-	-	-	-	-	-	-	-	-	-	-	-	-	-	-	-	-	-	-
Philanthropy/PRI (2)	5,350,000	-	-	-	-	-	-	-	-	-	-	-	-	-	-	-	-	-	-	-
Recycled Surplus (3)	-	94,892	350,478	616,414	892,859	1,180,288	1,631,919	1,630,919	1,629,899	1,628,859	1,627,798	1,626,715	1,625,611	1,624,485	1,623,336	1,622,165	1,620,970	1,619,751	1,618,507	3,233,184
Bonds (4)	16,480,000	17,149,536	17,856,128	18,590,923	19,355,075	-	-	-	-	-	-	-	-	-	-	-	-	-	-	-
Total Sources - Annual	36,830,000	17,244,428	18,206,606	19,207,336	20,247,934	1,180,288	1,631,919	1,630,919	1,629,899	1,628,859	1,627,798	1,626,715	1,625,611	1,624,485	1,623,336	1,622,165	1,620,970	1,619,751	1,618,507	3,233,184
Cumulative Capital Sources	36,830,000	54,074,428	72,281,034	91,488,370	111,736,304	112,916,592	114,548,512	116,179,431	117,809,330	119,438,189	121,065,987	122,692,702	124,318,314	125,942,799	127,566,135	129,188,300	130,809,270	132,429,020	134,047,527	137,280,712
USES																				
School Loans - Annual (5)	20,600,000	21,424,000	22,280,960	23,172,198	24,099,086	-	-	-	-	-	-	-	-	-	-	-	-	-	-	-
SIB Loan Repayment (6)	1,500	1,500	1,500	1,500	1,500	1,500	1,500	1,500	1,500	1,500	1,500	1,500	1,500	1,500	1,500	1,500	1,500	1,500	1,500	19,471,500
Cumulative School Loans	20,600,000	42,024,000	64,304,960	87,477,158	111,576,245	111,576,245	111,576,245	111,576,245	111,576,245	111,576,245	111,576,245	111,576,245	111,576,245	111,576,245	111,576,245	111,576,245	111,576,245	111,576,245	111,576,245	111,576,245
SIB Loan Leverage Ratio (7)	*1.4*	*2.8*	*4.3*	*5.8*	*7.4*	*7.4*	*7.4*	*7.4*	*7.4*	*7.4*	*7.4*	*7.4*	*7.4*	*7.4*	*7.4*	*7.4*	*7.4*	*7.4*	*7.4*	*7.4*
YEAR-END FUND BALANCE	16,228,500	12,047,428	7,971,574	4,005,212	152,559	1,331,348	2,961,767	4,591,186	6,219,586	7,846,945	9,473,242	11,098,458	12,722,569	14,345,554	15,967,390	17,588,055	19,207,525	20,825,775	22,442,783	6,204,467
CASH FLOW P&L																				
Inflow																				
Loan Repayments (8)	647,292	1,967,769	3,341,065	4,769,292	6,254,649	7,011,890	7,011,890	7,011,890	7,011,890	7,011,890	7,011,890	7,011,890	7,011,890	7,011,890	7,011,890	7,011,890	7,011,890	7,011,890	7,011,890	7,011,890
Outflow																				
Bond Debt Service (9)	(491,090)	(1,493,220)	(2,536,358)	(3,622,448)	(4,753,206)	(5,329,970)	(5,329,970)	(5,329,970)	(5,329,970)	(5,329,970)	(5,329,970)	(5,329,970)	(5,329,970)	(5,329,970)	(5,329,970)	(5,329,970)	(5,329,970)	(5,329,970)	(5,329,970)	(5,329,970)
Operating Expenses (10)	(61,310)	(124,071)	(188,293)	(253,985)	(321,155)	(50,000)	(51,000)	(52,020)	(53,060)	(54,122)	(55,204)	(56,308)	(57,434)	(58,583)	(59,755)	(60,950)	(62,169)	(63,412)	(64,680)	(65,974)
ANNUAL SURPLUS (CASH)	94,892	350,478	616,414	892,859	1,180,288	1,631,919	1,630,919	1,629,899	1,628,859	1,627,798	1,626,715	1,625,611	1,624,485	1,623,336	1,622,165	1,620,970	1,619,751	1,618,507	1,617,239	1,615,945

NOTES

(1) **SIB Loan** $15M loan projected with a fixed interest rate of 1.5% and 20-year term. All principal and accrued interest will be paid with one balloon payment at maturity in 2042. *Use Input tab to toggle alternative loan structures.*

(2) **Philanthropy/PRI** Philanthropic capital raised by 0180 & EFF. $5.5M already committed; $150K not included in this line will be used to pay the 1% SIB loan origination fee. In this scenario, no additional philanthropy is committed after 2023 and the fund ceases making loans after 2027.

(3) **Recycled Surplus** See Line 32. Surplus cash will recycle into additional charter school loans. 2042 amount reflects 2041 Annual Surplus plus 2042 Annual Surplus since funds will be used to repay SIB Loan P&I that year.

(4) **Bonds** A-rated tax-exempt bond proceeds provided by EFF.

(5) **School Loans** NVFF will fund approximately two projects per year. Loans are projected at $10.3M each in 2023 (including COI). We expect project costs will increase over time.

(6) **SIB Loan Repayment** $19,500,000 total reflects loan principal plus $4.5M accrued interest. *Use input tab to toggle other repayment structures.*

(7) **SIB Loan Leverage Ratio** Calculated by the toal number of loans divided by SIB's $15M investment. In this scenario, NVFF would seize making loans after 2027. EFF would continue to service outstanding loans until their maturity.

(8) **Loan Repayments** Loans are priced to 1) save schools ~$3M over a 30-year loan term and 2) provide revenue to support NVFF sustainability & ensure repayment of the SIB obligation.

(9) **Bond Debt Service** Projected debt service owed to EFF's investors.

(10) **Operating Expenses** OpEx reduced in 2028 to reflect cessation of underwriting and technical assistance activities.

OPPORTUNITY 180

AUDITED FINANCIAL STATEMENTS

DECEMBER 31, 2017



HOULDSWORTH, RUSSO & COMPANY
8675 S. Eastern Avenue | Las Vegas, Nevada 89123 | P: 702.269.9992 | F: 702.269.9993 | www.trustHRC.com

OPPORTUNITY 180

DECEMBER 31, 2017

TABLE OF CONTENTS

INDEPENDENT AUDITOR'S REPORT	1
STATEMENT OF FINANCIAL POSITION	2
STATEMENT OF ACTIVITIES	3
STATEMENT OF FUNCTIONAL EXPENSES	4
STATEMENT OF CASH FLOWS	5
NOTES TO FINANCIAL STATEMENTS	6-10

INDEPENDENT AUDITOR'S REPORT

Senior Management and
Board of Directors
Opportunity 180
Las Vegas, Nevada

We have audited the accompanying financial statements of Opportunity 180 (a nonprofit organization), which comprise the statement of financial position as of December 31, 2017; and the related statements of activities, functional expenses, and cash flows for the year then ended, and the related notes to the financial statements.

Management's Responsibility for the Financial Statements
Management is responsible for the preparation and fair presentation of these financial statements in accordance with accounting principles generally accepted in the United States of America; this includes the design, implementation, and maintenance of internal control relevant to the preparation and fair presentation of financial statements that are free from material misstatements, whether due to fraud or error.

Auditor's Responsibility
Our responsibility is to express an opinion on these financial statements based on our audit. We conducted our audit in accordance with auditing standards generally accepted in the United States of America. Those standards require that we plan and perform the audit to obtain reasonable assurance about whether the financial statements are free from material misstatement.

An audit involves performing procedures to obtain audit evidence about the amounts and disclosures in the financial statements. The procedures selected depend on the auditor's judgment, including the assessment of the risks of material misstatement of the financial statements, whether due to fraud or error. In making those risk assessments, the auditor considers internal control relevant to the entity's preparation and fair presentation of the financial statements in order to design audit procedures that are appropriate in the circumstances, but not for the purpose of expressing an opinion on the effectiveness of the entity's internal control. Accordingly, we express no such opinion. An audit also includes evaluating the appropriateness of accounting policies used and the reasonableness of significant accounting estimates made by management, as well as evaluating the overall presentation of the financial statements.

We believe that the audit evidence we have obtained is sufficient and appropriate to provide a basis for our audit opinion.

Opinion
In our opinion, the financial statements referred to above present fairly, in all material respects, the financial position of Opportunity 180 as of December 31, 2017, and the changes in its net assets and its cash flows for the year then ended in conformity with accounting principles generally accepted in the United States of America.

Houldsworth, Russo & Company, P.C.

Las Vegas, Nevada
March 5, 2018

Certified Public Accountants

OPPORTUNITY 180
STATEMENT OF FINANCIAL POSITION
DECEMBER 31, 2017

ASSETS		
CURRENT ASSETS		
Cash and equivalents	$	729,960
Cash and equivalents, restricted		3,155,206
Unconditional promises to give		50,000
Prepaid expenses		3,712
		3,938,878
OTHER ASSETS		
Property and equipment, net		21,375
Website development, net		695
Deposits		1,250
	$	3,962,198
LIABILITIES AND NET ASSETS		
CURRENT LIABILITIES		
Accounts payable	$	3,566
Accrued expenses		18,950
		22,516
NET ASSETS		
Unrestricted		734,476
Temporarily restricted		3,205,206
		3,939,682
	$	3,962,198

See accompanying notes to financial statements.

OPPORTUNITY 180
STATEMENT OF ACTIVITIES
FOR THE YEAR ENDED DECEMBER 31, 2017

UNRESTRICTED NET ASSETS	
Revenue, gains and other support:	
Contributions	$ 197,824
Program fees	33,830
Net assets released from restrictions	2,674,138
	2,905,792
Expenses:	
Program services	3,528,816
Support services	
Management and general	346,953
Fundraising	95,632
	3,971,401
Decrease in unrestricted net assets	(1,065,609)
TEMPORARILY RESTRICTED NET ASSETS	
Contributions	5,000
Net assets released from restrictions	(2,674,138)
Decrease in temporarily restricted net assets	(2,669,138)
DECREASE IN NET ASSETS	(3,734,747)
NET ASSETS, BEGINNING OF YEAR	7,674,429
NET ASSETS, END OF YEAR	$ 3,939,682

See accompanying notes to financial statements.

OPPORTUNITY 180
STATEMENT OF FUNCTIONAL EXPENSES
FOR THE YEAR ENDED DECEMBER 31, 2017

		Support Services		
	Program Services	Management and General	Fundraising	Total
Salaries and wages	$ 167,877	$ 169,833	$ 69,399	$ 407,109
Payroll taxes and related	13,171	13,325	5,445	31,941
Employee benefits	13,137	13,291	5,431	31,859
Fellowship training	1,914,763	-	-	1,914,763
Grants	1,289,636	-	-	1,289,636
Advertising	-	2,396	-	2,396
Bad debt	-	1,650	-	1,650
Community outreach	779	-	-	779
Consulting	35,650	34,172	2,500	72,322
Depreciation and amortization	4,428	4,480	1,830	10,738
Dues and subscriptions	3,136	3,173	1,297	7,606
Insurance	4,951	5,009	2,047	12,007
Meals	3,610	3,609	-	7,219
Occupancy	13,607	13,765	5,625	32,997
Office	3,825	3,869	1,581	9,275
Printing and publications	606	613	250	1,469
Professional expenses	55,000	73,120	-	128,120
Telephone	549	556	227	1,332
Travel	4,091	4,092	-	8,183
	$ 3,528,816	$ 346,953	$ 95,632	$ 3,971,401

See accompanying notes to financial statements.

OPPORTUNITY 180
STATEMENT OF CASH FLOWS
FOR THE YEAR ENDED DECEMBER 31, 2017

CASH FLOWS FROM OPERATING ACTIVITIES	
Decrease in net assets	$ (3,734,747)
Adjustments to reconcile change in net assets to net cash used in operating activities:	
Depreciation and amortization	10,738
(Increase) decrease in operating assets:	
Accounts receivable	22,000
Unconditional promises to give	1,049,501
Prepaid expenses	341,286
Deposits	4,450
Increase (decrease) in operating liabilities:	
Accounts payable	(47,774)
Accrued expenses	12,602
Net cash used in operating activities	(2,341,944)
CASH FLOWS FROM INVESTING ACTIVITIES	
Purchases of property and equipment	(2,231)
Change in restricted cash and equivalents	1,619,637
Net cash provided by investing activities	1,617,406
DECREASE IN CASH AND CASH EQUIVALENTS	(724,538)
CASH AND CASH EQUIVALENTS, BEGINNING OF YEAR	1,454,498
CASH AND CASH EQUIVALENTS, END OF YEAR	$ 729,960

See accompanying notes to financial statements.

OPPORTUNITY 180
NOTES TO FINANCIAL STATEMENTS
DECEMBER 31, 2017

NOTE 1. SUMMARY OF SIGNIFICANT ACCOUNTING POLICIES

Nature of Activities

Opportunity 180 (the "Organization") was incorporated August 26, 2014, under the laws of the State of Nevada. The Organization is a nonprofit entity that identifies and recruits leaders to open great schools and provides resources to develop great teachers in Clark County, Nevada. The Organization is supported primarily through donor contributions.

Basis of Accounting

The accompanying financial statements have been prepared on the accrual basis of accounting in accordance with accounting principles generally accepted in the United States of America, and, accordingly, reflect all significant receivables, payables, and other liabilities.

Basis of Presentation

Financial statement presentation follows the recommendations of the Financial Accounting Standards Board (FASB) in its Accounting Standards Codification (ASC). Under FASB ASC, the Organization is required to report information regarding its financial position and activities according to three classes of net assets: unrestricted net assets, temporarily restricted net assets, and permanently restricted net assets.

Income Tax Status

The Organization is a not-for-profit organization as described in Section 501(c)(3) of the Internal Revenue Code and is generally exempt from income taxes on related income pursuant to the appropriate section of the Internal Revenue Code.

Use of Estimates

Timely preparation of financial statements in conformity with accounting principles generally accepted in the United States of America requires management to make estimates and assumptions that affect certain reported amounts and disclosures, some of which may need revision in future periods. Accordingly, actual results may differ from those estimates.

Cash and Cash Equivalents

For the purpose of the statement of cash flows, the Organization considers all highly-liquid investments with an initial maturity of three months or less to be cash equivalents.

Property and Equipment

Property and equipment are carried at cost or, if donated, at the approximate fair value at the date of donation. Depreciation is computed using the straight-line method over the estimated useful life of the asset. The Organization capitalizes items with a cost basis in excess of $500.

NOTE 1. SUMMARY OF SIGNIFICANT ACCOUNTING POLICIES (CONTINUED)

Restricted and Unrestricted Revenue

Contributions that are restricted by the donor are reported as increases in unrestricted net assets if the restrictions expire (that is, when a stipulated time restriction ends or purpose restriction is accomplished) in the reporting period in which the revenue is recognized. All other donor-restricted contributions are reported as increases in temporarily or permanently restricted net assets, depending on the nature of the restrictions. When a restriction expires, temporarily restricted net assets are reclassified to unrestricted net assets and reported in the statement of activities as net assets released from restrictions.

Unconditional Promises to Give

Unconditional promises to give represent promises from donors to give to the Organization. Contributions are recognized when the donor makes a promise to give to the Organization that is, in substance, unconditional. Conditional promises to give are recognized at fair value when the conditions on which they depend are substantially met. Unconditional promises to give are stated at the amount management expects to collect from outstanding balances. It is the Organization's policy to charge off uncollectible balances when management determines the receivable will not be collected.

Donated Services

Donated services are recognized as contributions in accordance with accounting principles generally accepted in the United States of America if the services (a) create or enhance nonfinancial assets or (b) require specialized skills, are provided by individuals possessing those skills, and would otherwise be purchased by the Organization. During the year ended December 31, 2017, the Organization did not receive any donated services meeting these qualifications and, therefore, none are recognized in these financial statements.

Gifts of Long-Lived Assets

The Organization reports gifts of land, buildings, and equipment as unrestricted support unless explicit donor stipulations specify how the donated assets must be used. Gifts of long-lived assets with explicit restrictions that specify how the assets are to be used and gifts of cash or other assets that must be used to acquire long-lived assets are reported as temporarily restricted support. Absent explicit donor stipulations about how long those long-lived assets must be maintained, the Organization reports expirations of donor restrictions when the donated or acquired long-lived assets are placed in service.

Expense Allocation

The costs of providing various programs and activities have been summarized on a functional basis in the statement of activities and in the statement of functional expenses. Accordingly, certain costs have been allocated among the programs and supporting services benefited.

NOTE 1. SUMMARY OF SIGNIFICANT ACCOUNTING POLICIES (CONTINUED)

Impairment of Long-Lived Assets

The Organization reviews long-lived assets for impairment whenever events or changes in circumstances indicate that the carrying amount of an asset may not be recoverable. Recoverability of assets to be held and used is measured by a comparison of the carrying amount of an asset to future net undiscounted cash flows expected to be generated by the asset. If such assets are considered to be impaired, the impairment to be recognized is measured by the amount which the carrying amount of the assets exceeds the fair value of the assets.

Advertising

The Organization uses advertising to promote its programs and fundraising events. The production costs of advertising are expensed as incurred. Advertising expense was $2,396 for the year ended December 31, 2017.

Deposits

Deposits represent security deposits paid by the Organization under the terms of a lease agreement for office space.

Date of Management's Review

Subsequent events have been evaluated through March 5, 2018, which is the date the financial statements were available to be issued.

NOTE 2. UNCONDITIONAL PROMISES TO GIVE

Unconditional promises to give at December 31, 2017, consisted of one unconditional promise to give from the State of Nevada due in less than one year totaling $50,000, which represented the full balance of pledges to be received at December 31, 2017. No discount or allowance was recognized for these pledges.

NOTE 3. EMPLOYEE BENEFIT PLAN

The Organization participates in a single employer Simple IRA plan (the "Plan"), which is both employee and employer funded. The Organization is required to match up to 3% of qualified employee deferrals. Alternatively, the Organization may choose to make nonelective contributions equal to 2% of employee compensation for each employee for the calendar year. During the year ended December 31, 2017, the Organization contributed a total of $9,752.

NOTE 4. PROPERTY AND EQUIPMENT

Property and equipment consist of the following at December 31, 2017:

Furniture and equipment	$ 39,956
Less: accumulated depreciation	(18,581)
	$ 21,375

Depreciation expense totaled $10,044 for the year ended December 31, 2017.

NOTE 5. WEBSITE DEVELOPMENT

Website development costs are stated at cost. Additions and improvements are capitalized, while the costs of operating and maintaining the website are expensed as incurred. Amortization of the cost of website development is based on the estimated three-year useful life of the website using the straight-line method.

Website development consists of the following at December 31, 2017:

Website development costs	$ 2,083
Less: accumulated amortization	(1,388)
	$ 695

Amortization expense totaled $694 for the year ended December 31, 2017.

NOTE 6. CONCENTRATIONS

In the ordinary course of business, the Organization maintains cash balances at financial institutions in excess of federally insured limits. The cash held by the banking institutions is insured up to the Federal Deposit Insurance Corporation ("FDIC") limit of $250,000. The total uninsured cash balances in these accounts were $3,638,126 as of December 31, 2017.

During the year ended December 31, 2017, the Organization received contribution revenue of $151,000 from a single source. This donation represented 64% of total revenue.

NOTE 7. OPERATING LEASES

The Organization had a non-cancelable operating lease for office space that expired June 14, 2017. The Organization signed a new non-cancelable lease for office space effective June 15, 2017 and expiring June 15, 2018. The future minimum lease payments total $6,250 in 2018.

Rental expense recognized during the year ended December 31, 2017 totaled $23,671.

NOTE 8. CONDITIONAL PROMISE TO GIVE

In April 2016, the Organization received a conditional promise to give for $10,000,000. According to the original agreement, the gift was to be paid as matching funds in amounts equal to the qualifying support received by the Organization from July 1, 2015 through June 30, 2017. During June 2017, the donor extended the date through which qualifying support will be eligible for matching funds to June 30, 2019. As of December 31, 2017, the Organization has recorded revenue of $6,265,501 in relation to this agreement. The remaining portion of the conditional promise will be recognized as qualifying funds are received by the Organization before June 30, 2019.

NOTE 9. RESTRICTED NET ASSETS

Temporarily restricted net assets represent contributions and other inflows of assets whose use by the Organization is limited by donor-imposed stipulations that either expire by passage of time or can be fulfilled and removed by actions of the Organization pursuant to those stipulations.

Temporarily restricted net assets are restricted for the following purposes at December 31, 2017:

Building Excellent Schools	$ 226,615
Charter school development	2,928,591
Time restriction	50,000
	$ 3,205,206

Temporarily restricted net assets consisted of the following at December 31, 2017:

Cash	$ 3,155,206
Unconditional promises to give	50,000
	$ 3,205,206

OPPORTUNITY 180

AUDITED FINANCIAL STATEMENTS

DECEMBER 31, 2018



HOULDSWORTH, RUSSO & COMPANY
8675 S. Eastern Avenue | Las Vegas, Nevada 89123 | P: 702.269.9992 | F: 702.269.9993 | www.trustHRC.com

OPPORTUNITY 180

DECEMBER 31, 2018

TABLE OF CONTENTS

INDEPENDENT AUDITOR'S REPORT	1
STATEMENT OF FINANCIAL POSITION	2
STATEMENT OF ACTIVITIES	3
STATEMENT OF FUNCTIONAL EXPENSES	4
STATEMENT OF CASH FLOWS	5
NOTES TO FINANCIAL STATEMENTS	6-12

INDEPENDENT AUDITOR'S REPORT

Senior Management and
Board of Directors
Opportunity 180
Las Vegas, Nevada

We have audited the accompanying financial statements of Opportunity 180 (a nonprofit organization), which comprise the statement of financial position as of December 31, 2018; and the related statements of activities, functional expenses, and cash flows for the year then ended, and the related notes to the financial statements.

Management's Responsibility for the Financial Statements
Management is responsible for the preparation and fair presentation of these financial statements in accordance with accounting principles generally accepted in the United States of America; this includes the design, implementation, and maintenance of internal control relevant to the preparation and fair presentation of financial statements that are free from material misstatements, whether due to fraud or error.

Auditor's Responsibility
Our responsibility is to express an opinion on these financial statements based on our audit. We conducted our audit in accordance with auditing standards generally accepted in the United States of America. Those standards require that we plan and perform the audit to obtain reasonable assurance about whether the financial statements are free from material misstatement.

An audit involves performing procedures to obtain audit evidence about the amounts and disclosures in the financial statements. The procedures selected depend on the auditor's judgment, including the assessment of the risks of material misstatement of the financial statements, whether due to fraud or error. In making those risk assessments, the auditor considers internal control relevant to the entity's preparation and fair presentation of the financial statements in order to design audit procedures that are appropriate in the circumstances, but not for the purpose of expressing an opinion on the effectiveness of the entity's internal control. Accordingly, we express no such opinion. An audit also includes evaluating the appropriateness of accounting policies used and the reasonableness of significant accounting estimates made by management, as well as evaluating the overall presentation of the financial statements.

We believe that the audit evidence we have obtained is sufficient and appropriate to provide a basis for our audit opinion.

Opinion
In our opinion, the financial statements referred to above present fairly, in all material respects, the financial position of Opportunity 180 as of December 31, 2018, and the changes in its net assets and its cash flows for the year then ended in conformity with accounting principles generally accepted in the United States of America.

Houldsworth, Russo & Company, P.C.

Las Vegas, Nevada
April 26, 2019

Certified Public Accountants

OPPORTUNITY 180
STATEMENT OF FINANCIAL POSITION
DECEMBER 31, 2018

ASSETS	
CURRENT ASSETS	
Cash and equivalents	$ 1,834,683
Cash and equivalents, restricted	9,058,960
Unconditional promises to give, net	1,000,000
Prepaid expenses	977
	11,894,620
OTHER ASSETS	
Property and equipment, net	12,294
Deposits	1,250
	$ 11,908,164
LIABILITIES AND NET ASSETS	
CURRENT LIABILITIES	
Accounts payable	$ 10,586
Accrued expenses	43,184
	53,770
NET ASSETS	
Without donor restrictions	1,795,434
With donor restrictions	10,058,960
Total net assets	11,854,394
Total liabilities and net assets	$ 11,908,164

See accompanying notes to financial statements.

OPPORTUNITY 180
STATEMENT OF ACTIVITIES
FOR THE YEAR ENDED DECEMBER 31, 2018

NET ASSETS WITHOUT DONOR RESTRICTIONS	
Revenue, gains, and other support:	
Contributions	$ 1,990,292
Net assets released from restrictions	857,184
Total revenue, gains, and other support	2,847,476
Expenses:	
Program services	1,331,437
Support services	
Management and general	289,145
Fundraising	115,695
	1,736,277
Bad debt expense	50,242
Total expenses	1,786,519
Increase in net assets without donor restrictions	1,060,957
NET ASSETS WITH DONOR RESTRICTIONS	
Contributions	7,710,939
Net assets released from restrictions	(857,184)
Increase in net assets with donor restrictions	6,853,755
INCREASE IN NET ASSETS	7,914,712
NET ASSETS, BEGINNING OF YEAR	3,939,682
NET ASSETS, END OF YEAR	$ 11,854,394

See accompanying notes to financial statements.

OPPORTUNITY 180
STATEMENT OF FUNCTIONAL EXPENSES
FOR THE YEAR ENDED DECEMBER 31, 2018

	Program Services	Support Services: Management and General	Support Services: Fundraising	Total
Salaries and wages	$ 194,327	$ 160,164	$ 64,678	$ 419,169
Payroll taxes and related	16,462	13,568	5,478	35,508
Employee benefits	13,622	11,228	4,534	29,384
Fellowship training	862,155	-	-	862,155
Grants	92,835	-	-	92,835
Community outreach	28,834	-	-	28,834
Advertising	-	2,643	-	2,643
Consulting	63,782	52,569	21,229	137,580
Depreciation and amortization	4,978	4,103	1,657	10,738
Dues and subscriptions	4,432	3,652	1,475	9,559
Insurance	4,053	3,340	1,349	8,742
Meals	2,037	1,679	678	4,394
Occupancy	11,597	9,558	3,860	25,015
Office	8,007	6,600	2,665	17,272
Printing and publications	473	390	157	1,020
Professional expenses	16,956	13,975	5,643	36,574
Telephone	1,163	959	387	2,509
Travel	5,724	4,717	1,905	12,346
	$ 1,331,437	$ 289,145	$ 115,695	$ 1,736,277

See accompanying notes to financial statements.

OPPORTUNITY 180
STATEMENT OF CASH FLOWS
FOR THE YEAR ENDED DECEMBER 31, 2018

CASH FLOWS FROM OPERATING ACTIVITIES	
Increase in net assets	$ 7,914,712
Adjustments to reconcile change in net assets to net cash used in operating activities:	
Depreciation and amortization	10,738
Allowance on unconditional promise to give	50,000
(Increase) decrease in operating assets:	
Unconditional promises to give	(1,000,000)
Prepaid expenses	2,735
Increase (decrease) in operating liabilities:	
Accounts payable	7,020
Accrued expenses	24,234
Net cash provided by operating activities	7,009,439
CASH FLOWS FROM INVESTING ACTIVITIES	
Purchases of property and equipment	(962)
Net cash used in investing activities	(962)
INCREASE IN CASH AND CASH EQUIVALENTS	7,008,477
CASH AND CASH EQUIVALENTS, BEGINNING OF YEAR	3,885,166
CASH AND CASH EQUIVALENTS, END OF YEAR	$ 10,893,643
SUMMARY OF CASH ACCOUNTS	
Cash and equivalents	$ 1,834,683
Cash and equivalents, restricted	9,058,960
	$ 10,893,643

See accompanying notes to financial statements.

OPPORTUNITY 180
NOTES TO FINANCIAL STATEMENTS
DECEMBER 31, 2018

NOTE 1. SUMMARY OF SIGNIFICANT ACCOUNTING POLICIES

Nature of Activities

Opportunity 180 (the "Organization") was incorporated August 26, 2014, under the laws of the State of Nevada. The Organization is a nonprofit entity that recruits and supports high quality public charter schools to provide children in Southern Nevada with an excellent education and supports local education entrepreneurs wishing to create high quality public charter schools. The Organization is supported primarily through donor contributions.

Basis of Accounting

The accompanying financial statements have been prepared on the accrual basis of accounting in accordance with accounting principles generally accepted in the United States of America, and, accordingly, reflect all significant receivables, payables, and other liabilities.

Basis of Presentation

Financial statement presentation follows the recommendations of the Financial Accounting Standards Board (FASB) in its Accounting Standards Codification (ASC) 958-205. Under ASC 958-205, the Organization is required to report information regarding its financial position and activities according to two classes of net assets: net assets with donor restrictions and net assets without donor restrictions.

Income Tax Status

The Organization is a not-for-profit organization as described in Section 501(c)(3) of the Internal Revenue Code and is generally exempt from income taxes on related income pursuant to the appropriate section of the Internal Revenue Code.

Use of Estimates

Timely preparation of financial statements in conformity with accounting principles generally accepted in the United States of America requires management to make estimates and assumptions that affect certain reported amounts and disclosures, some of which may need revision in future periods. Accordingly, actual results may differ from those estimates.

Cash and Cash Equivalents

For the purpose of the statement of cash flows, the Organization considers all highly-liquid investments with an initial maturity of three months or less to be cash equivalents.

Property and Equipment

Property and equipment are carried at cost or, if donated, at the approximate fair value at the date of donation. Depreciation is computed using the straight-line method over the estimated useful life of the asset. The Organization capitalizes items with a cost basis in excess of $500 and with a useful life of greater than one year.

NOTE 1. SUMMARY OF SIGNIFICANT ACCOUNTING POLICIES (CONTINUED)

Donor-Imposed Restrictions

Contributions received are recorded as increases in net assets with or without restrictions, depending on the existence and/or nature of any donor restrictions. Support that is restricted by the donor is reported as an increase in net assets without donor restrictions if the restriction expires in the reporting period in which the support is recognized. All other donor-restricted support is reported as an increase in net assets with donor restrictions, depending on the nature of the restriction. When a restriction expires (that is, when a stipulated time restriction ends or purpose restriction is accomplished), net assets with donor restrictions are reclassified to net assets without donor restrictions and reported in the statement of activities as net assets released from restrictions.

Unconditional Promises to Give

Unconditional promises to give represent promises from donors to give to the Organization. Contributions are recognized when the donor makes a promise to give to the Organization that is, in substance, unconditional. Conditional promises to give are recognized at fair value when the conditions on which they depend are substantially met. Unconditional promises to give are stated at the amount management expects to collect from outstanding balances. It is the Organization's policy to charge off uncollectible balances when management determines the receivable will not be collected.

Donated Services

Donated services are recognized as contributions in accordance with accounting principles generally accepted in the United States of America if the services (a) create or enhance nonfinancial assets or (b) require specialized skills, are provided by individuals possessing those skills, and would otherwise be purchased by the Organization. During the year ended December 31, 2018, the Organization did not receive any donated services meeting these qualifications and, therefore, none are recognized in these financial statements.

Impairment of Long-Lived Assets

The Organization reviews long-lived assets for impairment whenever events or changes in circumstances indicate that the carrying amount of an asset may not be recoverable. Recoverability of assets to be held and used is measured by a comparison of the carrying amount of an asset to future net undiscounted cash flows expected to be generated by the asset. If such assets are considered to be impaired, the impairment to be recognized is measured by the amount which the carrying amount of the assets exceeds the fair value of the assets.

Advertising

The Organization uses advertising to promote its programs and fundraising events. The production costs of advertising are expensed as incurred. Advertising expense was $2,643 for the year ended December 31, 2018.

NOTE 1. SUMMARY OF SIGNIFICANT ACCOUNTING POLICIES (CONTINUED)

Deposits

Deposits represent security deposits paid by the Organization under the terms of a lease agreement for office space.

Functional Allocation of Expenses

The costs of providing program and other activities have been summarized on a functional basis in the statement of activities. Accordingly, certain costs have been allocated among program and supporting services benefited. Such allocations are determined by management on an equitable basis.

The following expenses were directly allocated by function based on the nature of the expense: fellowship training, grants, community outreach and advertising.

The following expenses were allocated on the basis of employee time and effort: salaries and wages, payroll taxes and related, employee benefits, consulting, depreciation and amortization, dues and subscriptions, insurance, meals, occupancy, office, printing and publications, professional expenses, telephone, and travel.

New Accounting Pronouncement

On August 18, 2016, the Financial Accounting Standards Board (FASB) issued Accounting Standards Update (ASU) 2016-14, *Not-for-Profit Entities (Topic 958) – Presentation of Financial Statements of Not-for-Profit Entities*. The update addresses the complexity and understandability of net asset classification, deficiencies in information about liquidity and availability of resources, and the lack of consistency in the type of information provided about expenses. The Organization has adjusted the presentation of these statements accordingly.

Date of Management's Review

Subsequent events have been evaluated through April 26, 2019, which is the date the financial statements were available to be issued.

NOTE 2. INFORMATION REGARDING LIQUIDITY AND AVAILABILITY

The Organization is substantially supported by contribution revenues, and considers contributions restricted for programs which are ongoing, major, and central to its operations to be available to meet cash needs for general expenditures. The Organization manages its liquidity and reserves following three guiding principles: operating within a prudent range of financial soundness and stability, maintaining adequate liquid assets to fund near-term operating needs, and maintaining sufficient reserves to provide reasonable assurance that long-term obligations will be discharged.

The following table reflects the Organization's financial assets as of December 31, 2018, reduced by amounts that are not available to meet general expenditures within one year of the statement of financial position date:

Cash and cash equivalents	$ 10,893,643
Unconditional promises to give, net	1,000,000
Financial assets available to meet cash needs for general expenditures within one year	$ 11,893,643

NOTE 3. CONCENTRATIONS

In the ordinary course of business, the Organization maintains cash balances at financial institutions in excess of federally insured limits. The cash held by the banking institutions is insured up to the Federal Deposit Insurance Corporation ("FDIC") limit of $250,000. The total uninsured cash balances in these accounts were $10,785,158 as of December 31, 2018.

During the year ended December 31, 2018, the Organization received contribution revenue of $8,500,000 from a single source. This donation represented 88% of total revenue.

The entire balance of unconditional promises to give was pledged by one donor at December 31, 2018.

NOTE 4. UNCONDITIONAL PROMISES TO GIVE

Unconditional promises to give at December 31, 2018, consisted of one pledge due in less than one year totaling $1,000,000. No discount or allowance was recognized for this pledge.

NOTE 5. PROPERTY AND EQUIPMENT

Property and equipment consist of the following at December 31, 2018:

Furniture and equipment	$ 40,919
Less: accumulated depreciations	(28,625)
Total	$ 12,294

Depreciation expense totaled $10,043 for the year ended December 31, 2018.

NOTE 6. WEBSITE DEVELOPMENT

Website development costs are stated at cost. Additions and improvements are capitalized, while the costs of operating and maintaining the website are expensed as incurred. Amortization of the cost of website development is based on the estimated three-year useful life of the website using the straight-line method.

Website development consists of the following at December 31, 2018:

Website development costs	2,083
Less: accumulated amortization	(2,083)
Total	$ -

Amortization expense totaled $695 for the year ended December 31, 2018.

NOTE 7. OPERATING LEASES

The Organization had a non-cancelable operating lease for office space that expired June 15, 2018. The Organization renewed this non-cancelable lease for office space effective June 15, 2018 and expiring June 15, 2019. The future minimum lease payments total $6,250 in 2019.

Rent expense recognized during the year ended December 31, 2018 totaled $17,138.

NOTE 8. NET ASSETS WITH DONOR RESTRICTIONS

Net assets with donor restrictions represent contributions and other inflows of assets whose use by the Organization is limited by donor-imposed stipulations that either expire by passage of time or can be fulfilled and removed by actions of the Organization pursuant to those stipulations.

Net assets with donor restrictions are restricted for the following purposes at December 31, 2018:

Building Excellent Schools	$ 224,520
Charter school development	2,073,502
Teach Plus	50,000
Investment in Program Partners	719,938
Clark County Education Initiatives	5,991,000
Time restriction	1,000,000
	$ 10,058,960

Net assets with donor restrictions consisted of the following at December 31, 2018:

Cash and cash equivalents	$ 9,058,960
Unconditional promise to give, net	1,000,000
	$ 10,058,960

Net assets were released from donor restrictions during 2018 by incurring expenses satisfying the restricted purposes as follows:

Building Excellent Schools	$ 2,095
Charter school development	855,089
	$ 857,184

NOTE 9. EMPLOYEE BENEFIT PLAN

The Organization participates in a 401k defined contribution plan (the Plan) which is both employee and employer funded. All employees meeting the Plan's requirements are eligible to participate. The Organization is required to match up to 3% of qualified employee deferrals. During the year ended December 31, 2018, the Organization contributed a total of $10,128.

NOTE 10. CONDITIONAL PROMISE TO GIVE

In April 2016, the Organization received a conditional promise to give for $10,000,000. According to the original agreement, the gift was to be paid as matching funds in amounts equal to the qualifying support received by the Organization from July 1, 2015 through June 30, 2017. During June 2017, the donor extended the date through which qualifying support would be eligible for matching funds to June 30, 2019.

On May 18, 2018, in response to the Organization's requests for payment from the donor based on qualifying support received during the fourth quarter of 2017 and first quarter of 2018, the donor responded that the promised funding was no longer available to the Organization. Although the Organization continues to recognize revenue earned from this conditional promise per the terms of the extended contract, as the continued collectability is in question, the Organization has chosen to fully allow for any amounts due from this donor. All revenue recognized from this donor during the year ended December 31, 2018 was reported at a net realizable value of $0.

As of December 31, 2018, the Organization has recognized qualifying support in the aggregate amount of $8,865,654, and this amount of matching funds has been requested of the donor. As of year-end, $6,215,501 has been collected by the Organization. Any future collections will be recognized as revenues as received by the Organization.

OPPORTUNITY 180

AUDITED FINANCIAL STATEMENTS

JUNE 30, 2020

OPPORTUNITY 180

JUNE 30, 2020

TABLE OF CONTENTS

INDEPENDENT AUDITOR'S REPORT	1
STATEMENT OF FINANCIAL POSITION	2
STATEMENT OF ACTIVITIES	3
STATEMENT OF FUNCTIONAL EXPENSES	4
STATEMENT OF CASH FLOWS	5
NOTES TO FINANCIAL STATEMENTS	6-12

INDEPENDENT AUDITOR'S REPORT

Senior Management and
Board of Directors
Opportunity 180
Las Vegas, Nevada

We have audited the accompanying financial statements of Opportunity 180 (a nonprofit organization), which comprise the statement of financial position as of June 30, 2020, and the related statements of activities, functional expenses, and cash flows for the 18 months then ended, and the related notes to the financial statements.

Management's Responsibility for the Financial Statements
Management is responsible for the preparation and fair presentation of these financial statements in accordance with accounting principles generally accepted in the United States of America; this includes the design, implementation, and maintenance of internal control relevant to the preparation and fair presentation of financial statements that are free from material misstatements, whether due to fraud or error.

Auditor's Responsibility
Our responsibility is to express an opinion on these financial statements based on our audit. We conducted our audit in accordance with auditing standards generally accepted in the United States of America. Those standards require that we plan and perform the audit to obtain reasonable assurance about whether the financial statements are free from material misstatement.

An audit involves performing procedures to obtain audit evidence about the amounts and disclosures in the financial statements. The procedures selected depend on the auditor's judgment, including the assessment of the risks of material misstatement of the financial statements, whether due to fraud or error. In making those risk assessments, the auditor considers internal control relevant to the entity's preparation and fair presentation of the financial statements in order to design audit procedures that are appropriate in the circumstances, but not for the purpose of expressing an opinion on the effectiveness of the entity's internal control. Accordingly, we express no such opinion. An audit also includes evaluating the appropriateness of accounting policies used and the reasonableness of significant accounting estimates made by management, as well as evaluating the overall presentation of the financial statements.

We believe that the audit evidence we have obtained is sufficient and appropriate to provide a basis for our audit opinion.

Opinion
In our opinion, the financial statements referred to above present fairly, in all material respects, the financial position of Opportunity 180 as of June 30, 2020, and the changes in its net assets and its cash flows for the 18 months then ended in conformity with accounting principles generally accepted in the United States of America.

Holdsworth, Russo & Company, P.C.

Las Vegas, Nevada
January 6, 2021

OPPORTUNITY 180
STATEMENT OF FINANCIAL POSITION
JUNE 30, 2020

ASSETS	
CURRENT ASSETS	
Cash and equivalents	$ 3,164,818
Cash and equivalents, restricted	2,298,553
Prepaid expenses	6,445
	5,469,816
OTHER ASSETS	
Property and equipment, net	9,124
Deposits	1,250
	$ 5,480,190
LIABILITIES AND NET ASSETS	
CURRENT LIABILITIES	
Accounts payable	$ 81,104
Grants payable	1,839,580
Accrued expenses	44,069
Paycheck Protection Program loan	89,466
	2,054,219
NET ASSETS	
Without donor restrictions	1,127,418
With donor restrictions	2,298,553
Total net assets	3,425,971
Total liabilities and net assets	$ 5,480,190

See accompanying notes to financial statements.

OPPORTUNITY 180
STATEMENT OF ACTIVITIES
FOR THE 18 MONTHS ENDED JUNE 30, 2020

NET ASSETS WITHOUT DONOR RESTRICTIONS	
Revenue, gains, and other support:	
Contributions	$ 7,784
In-kind donations	61,120
Interest income	4,202
Net assets released from restrictions	6,760,407
Total revenue, gains, and other support	6,833,513
Expenses:	
Program services	7,648,345
Support services	
Management and general	624,281
Fundraising	180,413
	8,453,039
Loss on return of grant funds	48,490
Total expenses	8,501,529
Change in net assets without donor restrictions	(1,668,016)
NET ASSETS WITH DONOR RESTRICTIONS	
Net assets released from restrictions	(6,760,407)
Change in net assets with donor restrictions	(6,760,407)
CHANGE IN NET ASSETS	(8,428,423)
NET ASSETS, BEGINNING OF YEAR	11,854,394
NET ASSETS, END OF YEAR	$ 3,425,971

See accompanying notes to financial statements.

OPPORTUNITY 180
STATEMENT OF FUNCTIONAL EXPENSES
FOR THE 18 MONTHS ENDED JUNE 30, 2020

	Program Services	Support Services: Management and General	Support Services: Fundraising	Total
Salaries and wages	$ 372,913	$ 282,976	$ 114,115	$ 770,004
Payroll taxes and related	29,853	22,653	9,135	61,641
Employee benefits	31,917	24,220	9,767	65,904
Fellowship training	338,291	-	-	338,291
Grants	5,337,902	-	-	5,337,902
Community outreach	146,154	-	-	146,154
Advertising	-	8,548	-	8,548
Consulting	1,318,296	116,102	25,050	1,459,448
Depreciation	4,864	3,691	1,489	10,044
Dues and subscriptions	8,757	6,645	2,680	18,082
Insurance	9,182	6,967	2,810	18,959
Meals	4,588	3,482	1,404	9,474
Occupancy	17,194	13,047	5,262	35,503
Office	9,192	6,976	2,813	18,981
Printing and publications	727	552	222	1,501
Professional fees	-	114,371	-	114,371
Telephone	1,187	901	363	2,451
Travel	17,328	13,150	5,303	35,781
	$ 7,648,345	$ 624,281	$ 180,413	$ 8,453,039

See accompanying notes to financial statements.

OPPORTUNITY 180
STATEMENT OF CASH FLOWS
FOR THE 18 MONTHS ENDED JUNE 30, 2020

CASH FLOWS FROM OPERATING ACTIVITIES	
Change in net assets	$ (8,428,423)
Adjustments to reconcile change in net assets to net cash used in operating activities:	
Depreciation	10,044
(Increase) decrease in operating assets:	
Unconditional promises to give	1,000,000
Prepaid expenses	(5,468)
Increase (decrease) in operating liabilities:	
Accounts payable	70,518
Grants payable	1,839,580
Accrued expenses	885
Net cash used in operating activities	(5,512,864)
CASH FLOWS FROM INVESTING ACTIVITIES	
Purchases of property and equipment	(6,874)
Net cash used in investing activities	(6,874)
CASH FLOWS FROM FINANCING ACTIVITIES	
Proceeds from Paycheck Protection Program Loan	89,466
Net cash provided by financing activities	89,466
DECREASE IN CASH AND EQUIVALENTS	(5,430,272)
CASH AND EQUIVALENTS, BEGINNING OF YEAR	10,893,643
CASH AND EQUIVALENTS, END OF YEAR	$ 5,463,371
SUMMARY OF CASH ACCOUNTS	
Cash and equivalents	$ 3,164,818
Cash and equivalents, restricted	2,298,553
	$ 5,463,371

See accompanying notes to financial statements.

OPPORTUNITY 180
NOTES TO FINANCIAL STATEMENTS
JUNE 30, 2020

NOTE 1. SUMMARY OF SIGNIFICANT ACCOUNTING POLICIES

Nature of Activities

Opportunity 180 (the "Organization") was incorporated August 26, 2014, under the laws of the State of Nevada. The Organization is a nonprofit entity that recruits and supports high quality public charter schools to provide children in Southern Nevada with an excellent education and supports local education entrepreneurs wishing to create high quality public charter schools. The Organization is supported primarily through donor contributions.

Basis of Accounting

The accompanying financial statements have been prepared on the accrual basis of accounting in accordance with accounting principles generally accepted in the United States of America, and, accordingly, reflect all significant receivables, payables, and other liabilities.

Basis of Presentation

Financial statement presentation follows the recommendations of the Financial Accounting Standards Board (FASB) in its Accounting Standards Codification (ASC) 958-205. Under ASC 958-205, the Organization is required to report information regarding its financial position and activities according to two classes of net assets: net assets with donor restrictions and net assets without donor restrictions.

Income Tax Status

The Organization is a not-for-profit organization as described in Section 501(c)(3) of the Internal Revenue Code and is generally exempt from income taxes on related income pursuant to the appropriate section of the Internal Revenue Code.

Use of Estimates

Timely preparation of financial statements in conformity with accounting principles generally accepted in the United States of America requires management to make estimates and assumptions that affect certain reported amounts and disclosures, some of which may need revision in future periods. Accordingly, actual results may differ from those estimates.

Cash and Equivalents

For the purpose of the statement of cash flows, the Organization considers all highly-liquid investments with an initial maturity of three months or less and money market funds to be cash equivalents.

NOTE 1. SUMMARY OF SIGNIFICANT ACCOUNTING POLICIES (CONTINUED)

Property and Equipment

Property and equipment are carried at cost or, if donated, at the approximate fair value at the date of donation. Depreciation is computed using the straight-line method over the estimated useful life of the asset. The Organization capitalizes items with a cost basis in excess of $500 and with a useful life of greater than one year.

Revenue Recognition

Contributions received are recorded as increases in net assets with or without restrictions, depending on the existence and/or nature of any donor restrictions. Support that is restricted by the donor is reported as an increase in net assets without donor restrictions if the restriction expires in the reporting period in which the support is recognized. All other donor-restricted support is reported as an increase in net assets with donor restrictions, depending on the nature of the restriction. When a restriction expires (that is, when a stipulated time restriction ends or purpose restriction is accomplished), net assets with donor restrictions are reclassified to net assets without donor restrictions and reported in the statement of activities as net assets released from restrictions.

Unconditional Promises to Give

Unconditional promises to give represent promises from donors to give to the Organization. Contributions are recognized when the donor makes a promise to give to the Organization that is, in substance, unconditional. Conditional promises to give are recognized at fair value when the conditions on which they depend are substantially met. Unconditional promises to give are stated at the amount management expects to collect from outstanding balances. It is the Organization's policy to charge off uncollectible balances when management determines the receivable will not be collected.

Donated Services

Donated services are recognized as contributions in accordance with accounting principles generally accepted in the United States of America if the services (a) create or enhance nonfinancial assets or (b) require specialized skills, are provided by individuals possessing those skills, and would otherwise be purchased by the Organization. During the 18 months ended June 30, 2020, the Organization did not receive any donated services meeting these qualifications and, therefore, none are recognized in these financial statements.

Impairment of Long-Lived Assets

The Organization reviews long-lived assets for impairment whenever events or changes in circumstances indicate that the carrying amount of an asset may not be recoverable. Recoverability of assets to be held and used is measured by a comparison of the carrying amount of an asset to future net undiscounted cash flows expected to be generated by the asset. If such assets are considered to be impaired, the impairment to be recognized is measured by the amount which the carrying amount of the assets exceeds the fair value of the assets.

NOTE 1. SUMMARY OF SIGNIFICANT ACCOUNTING POLICIES (CONTINUED)

Advertising

The Organization expenses all advertising costs as they are incurred.

Deposits

Deposits represent security deposits paid by the Organization under the terms of a lease agreement for office space.

Functional Allocation of Expenses

The costs of providing program and other activities have been summarized on a functional basis in the statement of activities. Accordingly, certain costs have been allocated among program and supporting services benefited. Such allocations are determined by management on an equitable basis.

The following expenses were directly allocated by function based on the nature of the expense: fellowship training, grants, community outreach, advertising, consulting and professional fees.

The following expenses were allocated on the basis of employee time and effort: salaries and wages, payroll taxes and related, employee benefits, depreciation, dues and subscriptions, insurance, meals, occupancy, office, printing and publications, telephone, and travel.

Grants Payable

The Organization makes irrevocable commitments to grant funds to other organizations with missions similar to that of the Organization. As of June 30, 2020, all such grants are expected to be paid within one year

Date of Management's Review

Subsequent events have been evaluated through January 6, 2021, which is the date the financial statements were available to be issued.

NOTE 2. INFORMATION REGARDING LIQUIDITY AND AVAILABILITY

The Organization is substantially supported by contribution revenues, and considers contributions restricted for programs which are ongoing, major, and central to its operations to be available to meet cash needs for general expenditures. The Organization manages its liquidity and reserves following three guiding principles: operating within a prudent range of financial soundness and stability, maintaining adequate liquid assets to fund near-term operating needs, and maintaining sufficient reserves to provide reasonable assurance that long-term obligations will be discharged.

The following table reflects the Organization's financial assets as of June 30, 2020, reduced by amounts that are not available to meet general expenditures within one year of the statement of financial position date:

Cash and equivalents	$ 5,463,371
Financial assets available to meet cash needs for general expenditures within one year	$ 5,463,371

NOTE 3. CONCENTRATIONS

In the ordinary course of business, the Organization maintains cash deposits at financial institutions which, at most times, exceeds the amounts covered by the Federal Deposit Insurance Corporation (FDIC) limit of $250,000. The Organization has not experienced any losses on these deposits and management does not believe it is exposed to a significant credit risk related to these balances.

NOTE 4. PROPERTY AND EQUIPMENT

Property and equipment consists of the following as of June 30, 2020:

Furniture and equipment	$ 47,793
Less: accumulated depreciation	(38,669)
	$ 9,124

NOTE 5. OPERATING LEASE

The Organization had a non-cancelable operating lease for office space that expired June 15, 2020. The Organization renewed this non-cancelable lease for office space effective June 16, 2020 and expiring June 15, 2021. Total future minimum lease payments of $15,000 under this lease are expected to be paid within one year.

Rent expense related to this lease totaled $22,500 for the 18 months ended June 30, 2020.

NOTE 6. NET ASSETS WITH DONOR RESTRICTIONS

Net assets with donor restrictions represent contributions and other inflows of assets whose use by the Organization is limited by donor-imposed stipulations that either expire by passage of time or can be fulfilled and removed by actions of the Organization pursuant to those stipulations.

Net assets with donor restrictions are restricted for the following purposes at June 30, 2020:

Building Excellent Schools	$ 149,520
Teach Plus	50,000
Investment in Program Partners	437,359
Clark County Education Initiatives	1,661,674
	$ 2,298,553

Net assets with donor restrictions consisted of the following at June 30, 2020:

Cash and equivalents	$ 2,298,553

Net assets were released from donor restrictions during the 18 months ended June 30, 2020 by incurring expenses satisfying the restricted purposes as follows:

Building Excellent Schools	$ 75,000
Charter school development	2,073,502
Investment in Program Partners	282,580
Clark County Education Initiatives	4,329,325
	$ 6,760,407

NOTE 7. EMPLOYEE BENEFIT PLAN

The Organization participates in a 401k defined contribution plan (the Plan) which is both employee and employer funded. All employees meeting the Plan's requirements are eligible to participate. The Organization is required to match up to 3% of qualified employee deferrals. During the 18 months ended June 30, 2020, the Organization contributed a total of $13,401.

NOTE 8. CONDITIONAL PROMISE TO GIVE

In April 2016, the Organization received a conditional promise to give for $10,000,000. According to the original agreement, the gift was to be paid as matching funds in amounts equal to the qualifying support received by the Organization from July 1, 2015 through June 30, 2017. During June 2017, the donor extended the date through which qualifying support would be eligible for matching funds to June 30, 2019.

On May 18, 2018, in response to the Organization's requests for payment from the donor based on qualifying support received during the fourth quarter of 2017 and first quarter of 2018, the donor responded that the promised funding was no longer available to the Organization. Based on this, as of January 1, 2019, the Organization stopped recognizing revenue from this conditional promise to give and does not expect to receive any further payments.

NOTE 9. PAYCHECK PROTECTION PROGRAM LOAN

On May 1, 2020, Opportunity 180 (the "Borrower") qualified for and received a loan pursuant to the Paycheck Protection Program, a program implemented by the U.S. Small Business Administration ("SBA") under the Coronavirus Aid, Relief, and Economic Security Act, from a qualified lender (the "PPP Lender"), for an aggregate principal amount of $89,466 (the "PPP Loan"). The PPP Loan bears interest at a fixed rate of 1.0% per annum, has a term of two years, and is unsecured and guaranteed by the U.S. Small Business Administration. The principal and accrued interest of the PPP Loan is subject to forgiveness under the Paycheck Protection Program upon the Organization's request to the extent that the PPP Loan proceeds are used to pay expenses permitted by the Paycheck Protection Program, including payroll costs, covered rent and mortgage obligations, and covered utility payments incurred by the Organization. The Organization intends to apply for forgiveness of the PPP Loan with respect to these covered expenses. To the extent that all or part of the PPP Loan is not forgiven, the Organization will be required to pay interest on the PPP Loan at a rate of 1.0% per annum, and commencing the earlier of (1) the date that SBA remits the Borrower's loan forgiveness amount to the Lender or (2) 6 months after the end of the Borrower's loan forgiveness covered period of 8-weeks, principal and interest payments will be required through the maturity date in May 2022. The terms of the PPP Loan provide for customary events of default including, among other things, payment defaults, breach of representations and warranties, and insolvency events. The PPP Loan may be accelerated upon the occurrence of an event of default.

The Organization has accounted for the PPP loan as a financial liability in accordance with FASB ASC 470 and accrued interest in accordance with the interest method under FASB ASC 835-30. The loan will be recognized as revenue when loan forgiveness is provided by the SBA.

NOTE 10. WORLDWIDE PANDEMIC

In March of 2020, the World Health Organization declared the spread of Coronavirus Disease (COVID-19) a worldwide pandemic. The COVID-19 pandemic is having significant effects on global markets, supply chains, businesses, and communities. Specific to the Organization, COVID-19 may impact various parts of its future operations and financial results. Management believes the Organization is taking appropriate actions to mitigate the potential negative impact. However, the full impact of COVID-19 is unknown and cannot be reasonably estimated as these events are still developing.

OPPORTUNITY 180

AUDITED FINANCIAL STATEMENTS

JUNE 30, 2021

OPPORTUNITY 180

JUNE 30, 2021

TABLE OF CONTENTS

INDEPENDENT AUDITOR'S REPORT	1
STATEMENT OF FINANCIAL POSITION	2
STATEMENT OF ACTIVITIES	3
STATEMENT OF FUNCTIONAL EXPENSES	4
STATEMENT OF CASH FLOWS	5
NOTES TO FINANCIAL STATEMENTS	6-13

INDEPENDENT AUDITOR'S REPORT

Senior Management and
Board of Directors
Opportunity 180
Las Vegas, Nevada

We have audited the accompanying financial statements of Opportunity 180 (a nonprofit organization), which comprise the statement of financial position as of June 30, 2021, and the related statements of activities, functional expenses, and cash flows for the year then ended, and the related notes to the financial statements.

Management's Responsibility for the Financial Statements
Management is responsible for the preparation and fair presentation of these financial statements in accordance with accounting principles generally accepted in the United States of America; this includes the design, implementation, and maintenance of internal control relevant to the preparation and fair presentation of financial statements that are free from material misstatements, whether due to fraud or error.

Auditor's Responsibility
Our responsibility is to express an opinion on these financial statements based on our audit. We conducted our audit in accordance with auditing standards generally accepted in the United States of America. Those standards require that we plan and perform the audit to obtain reasonable assurance about whether the financial statements are free from material misstatement.

An audit involves performing procedures to obtain audit evidence about the amounts and disclosures in the financial statements. The procedures selected depend on the auditor's judgment, including the assessment of the risks of material misstatement of the financial statements, whether due to fraud or error. In making those risk assessments, the auditor considers internal control relevant to the entity's preparation and fair presentation of the financial statements in order to design audit procedures that are appropriate in the circumstances, but not for the purpose of expressing an opinion on the effectiveness of the entity's internal control. Accordingly, we express no such opinion. An audit also includes evaluating the appropriateness of accounting policies used and the reasonableness of significant accounting estimates made by management, as well as evaluating the overall presentation of the financial statements.

We believe that the audit evidence we have obtained is sufficient and appropriate to provide a basis for our audit opinion.

Opinion
In our opinion, the financial statements referred to above present fairly, in all material respects, the financial position of Opportunity 180 as of June 30, 2021, and the changes in its net assets and its cash flows for the year then ended in conformity with accounting principles generally accepted in the United States of America.

Holdsworth, Russo & Company, P.C.

Las Vegas, Nevada
February 9, 2022

OPPORTUNITY 180
STATEMENT OF FINANCIAL POSITION
JUNE 30, 2021

ASSETS	
CURRENT ASSETS	
Cash and equivalents	$ 6,900,192
Cash and equivalents, restricted	83,020
Investments	7,817,765
Unconditional promises to give	400,000
Grants receivable	400,734
Prepaid expenses	6,669
	15,608,380
OTHER ASSETS	
Property and equipment, net	6,348
Deposits	1,250
	$ 15,615,978
LIABILITIES AND NET ASSETS	
CURRENT LIABILITIES	
Accounts payable	$ 116,702
Accrued expenses	63,613
Grants payable	1,841,952
Funds held for others	180,015
	2,202,282
NET ASSETS	
Without donor restrictions	12,930,676
With donor restrictions	483,020
Total net assets	13,413,696
Total liabilities and net assets	$ 15,615,978

See accompanying notes to financial statements.

OPPORTUNITY 180
STATEMENT OF ACTIVITIES
FOR THE YEAR ENDED JUNE 30, 2021

NET ASSETS WITHOUT DONOR RESTRICTIONS	
Revenue, gains, and other support:	
Contributions	$ 19,619,498
Grant revenue	560,734
Investment income, net	230,452
Net assets released from restrictions	2,240,533
Total revenue, gains, and other support	22,651,217
Expenses and losses:	
Program services	10,345,486
Support services	
Management and general	430,345
Fundraising	70,686
Total expenses	10,846,517
Loss on disposal of property and equipment	1,442
	10,847,959
Change in net assets without donor restrictions	11,803,258
NET ASSETS WITH DONOR RESTRICTIONS	
Contributions	425,000
Net assets released from restrictions	(2,240,533)
Change in net assets with donor restrictions	(1,815,533)
CHANGE IN NET ASSETS	9,987,725
NET ASSETS, BEGINNING OF YEAR	3,425,971
NET ASSETS, END OF YEAR	$ 13,413,696

See accompanying notes to financial statements.

OPPORTUNITY 180
STATEMENT OF FUNCTIONAL EXPENSES
FOR THE YEAR ENDED JUNE 30, 2021

	Program Services	Support Services: Management and General	Support Services: Fundraising	Total
Salaries and wages	$ 488,005	$ 133,958	$ 53,570	$ 675,533
Payroll taxes and related	38,947	10,691	4,275	53,913
Employee benefits	53,896	14,794	5,916	74,606
Grants	914,962	-	-	914,962
Community and educational outreach	8,786,584	-	-	8,786,584
Advertising	-	1,615	-	1,615
Consulting		85,787	-	85,787
Depreciation	3,529	968	387	4,884
Dues and subscriptions	15,218	4,177	1,670	21,065
Insurance	8,680	2,383	953	12,016
Meals	1,819	499	200	2,518
Occupancy	15,154	4,160	1,663	20,977
Office	14,746	4,048	1,619	20,413
Printing and publications	210	58	23	291
Professional fees	-	166,182	-	166,182
Telephone	3,703	1,016	406	5,125
Travel	33	9	4	46
	$ 10,345,486	$ 430,345	$ 70,686	$ 10,846,517

See accompanying notes to financial statements.

OPPORTUNITY 180
STATEMENT OF CASH FLOWS
FOR THE YEAR ENDED JUNE 30, 2021

CASH FLOWS FROM OPERATING ACTIVITIES	
Change in net assets	$ 9,987,725
Adjustments to reconcile change in net assets to net cash provided by operating activities:	
Depreciation	4,884
Realized and unrealized gains on investments	(161,044)
(Increase) decrease in operating assets:	
Unconditional promises to give	(400,000)
Grants receivable	(400,734)
Prepaid expenses	(224)
Paycheck Protection Program loan forgiveness	(89,466)
Increase (decrease) in operating liabilities:	
Accounts payable	35,598
Accrued expenses	19,544
Grants payable	2,372
Funds held for others	180,015
Net cash provided by operating activities	9,178,670
CASH FLOWS FROM INVESTING ACTIVITIES	
Purchases of property and equipment	(2,108)
Purchases of investments	(9,140,586)
Proceeds from the sales of investments	1,483,865
Net cash used in investing activities	(7,658,829)
CHANGE IN CASH AND EQUIVALENTS	1,519,841
CASH AND EQUIVALENTS, BEGINNING OF YEAR	5,463,371
CASH AND EQUIVALENTS, END OF YEAR	$ 6,983,212
SUMMARY OF CASH ACCOUNTS	
Cash and equivalents	$ 6,900,192
Cash and equivalents, restricted	83,020
	$ 6,983,212

See accompanying notes to financial statements.

OPPORTUNITY 180
NOTES TO FINANCIAL STATEMENTS
JUNE 30, 2021

NOTE 1. SUMMARY OF SIGNIFICANT ACCOUNTING POLICIES

Nature of Activities

Opportunity 180 (the "Organization") was incorporated August 26, 2014, under the laws of the State of Nevada. The Organization is a nonprofit entity that recruits and supports high quality public charter schools to provide children in Southern Nevada with an excellent education and supports local education entrepreneurs wishing to create high quality public charter schools. The Organization is supported primarily through donor contributions.

Basis of Accounting

The accompanying financial statements have been prepared on the accrual basis of accounting in accordance with accounting principles generally accepted in the United States of America, and, accordingly, reflect all significant receivables, payables, and other liabilities.

Basis of Presentation

Financial statement presentation follows the recommendations of the Financial Accounting Standards Board (FASB) in its Accounting Standards Codification (ASC) 958-205. Under ASC 958-205, the Organization is required to report information regarding its financial position and activities according to two classes of net assets: net assets with donor restrictions and net assets without donor restrictions.

Income Tax Status

The Organization is a not-for-profit organization as described in Section 501(c)(3) of the Internal Revenue Code and is generally exempt from income taxes on related income pursuant to the appropriate section of the Internal Revenue Code.

Use of Estimates

Timely preparation of financial statements in conformity with accounting principles generally accepted in the United States of America requires management to make estimates and assumptions that affect certain reported amounts and disclosures, some of which may need revision in future periods. Accordingly, actual results may differ from those estimates.

Cash and Equivalents

For the purpose of the statement of cash flows, the Organization considers all highly-liquid investments with an initial maturity of three months or less and money market funds to be cash equivalents.

Investments

The Organization carries investments in marketable securities with readily determinable fair values at fair market value in the statement of financial position. Unrealized gains and losses are included in the change in net assets in the accompanying statement of activities.

NOTE 1. SUMMARY OF SIGNIFICANT ACCOUNTING POLICIES (CONTINUED)

Property and Equipment

Property and equipment are carried at cost or, if donated, at the approximate fair value at the date of donation. Depreciation is computed using the straight-line method over the estimated useful life of the asset. The Organization capitalizes items with a cost basis in excess of $500 and with a useful life of greater than one year.

Impairment of Long-Lived Assets

The Organization reviews long-lived assets for impairment whenever events or changes in circumstances indicate that the carrying amount of an asset may not be recoverable. Recoverability of assets to be held and used is measured by a comparison of the carrying amount of an asset to future net undiscounted cash flows expected to be generated by the asset. If such assets are considered to be impaired, the impairment to be recognized is measured by the amount which the carrying amount of the assets exceeds the fair value of the assets.

Revenue Recognition

Contributions received are recorded as increases in net assets with or without restrictions, depending on the existence and/or nature of any donor restrictions. Support that is restricted by the donor is reported as an increase in net assets without donor restrictions if the restriction expires in the reporting period in which the support is recognized. All other donor-restricted support is reported as an increase in net assets with donor restrictions, depending on the nature of the restriction. When a restriction expires (that is, when a stipulated time restriction ends or purpose restriction is accomplished), net assets with donor restrictions are reclassified to net assets without donor restrictions and reported in the statement of activities as net assets released from restrictions.

Unconditional Promises to Give

Unconditional promises to give represent promises from donors to give to the Organization. Contributions are recognized when the donor makes a promise to give to the Organization that is, in substance, unconditional. Conditional promises to give are recognized at fair value when the conditions on which they depend are substantially met. Unconditional promises to give are stated at the amount management expects to collect from outstanding balances. It is the Organization's policy to charge off uncollectible balances when management determines the receivable will not be collected. As of June 30, 2021, the entire balance is due from one donor and expected to be collected within one year.

Grants Receivable

Grants receivable represents grant monies that have not been received but are owed to the Organization as of June 30, 2021. Grants receivable is stated at the amounts management expects to collect. As of June 30, 2021, the entire balance is due from one source and expected to be collected within one year.

NOTE 1. SUMMARY OF SIGNIFICANT ACCOUNTING POLICIES (CONTINUED)

Deposits

Deposits represent security deposits paid by the Organization under the terms of a lease agreement for office space.

Grants Payable

The Organization makes irrevocable commitments to grant funds to other organizations with missions similar to that of the Organization. As of June 30, 2021, all such grants are expected to be paid within one year.

Funds Held for Others

The Organization acts as a fiscal agent for a proposed charter school in Southern Nevada. The Organization collects contributions on the school's behalf and remits funds to the school or on its behalf at the school's discretion.

Donated Services

Donated services are recognized as contributions in accordance with accounting principles generally accepted in the United States of America if the services (a) create or enhance nonfinancial assets or (b) require specialized skills, are provided by individuals possessing those skills, and would otherwise be purchased by the Organization. During the year ended June 30, 2021, the Organization did not receive any donated services meeting these qualifications.

Advertising

The Organization expenses all advertising costs as they are incurred.

Functional Allocation of Expenses

The costs of providing program and other activities have been summarized on a functional basis in the statement of activities. Accordingly, certain costs have been allocated among program and supporting services benefited. Such allocations are determined by management on an equitable basis.

The following expenses were directly allocated by function based on the nature of the expense: grants, community outreach, advertising, consulting, and professional fees.

The following expenses were allocated on the basis of employee time and effort: salaries and wages, payroll taxes and related, employee benefits, depreciation, dues and subscriptions, insurance, meals, occupancy, office, printing and publications, telephone, and travel.

Date of Management's Review

Subsequent events have been evaluated through February 9, 2022, which is the date the financial statements were available to be issued.

NOTE 2. INFORMATION REGARDING LIQUIDITY AND AVAILABILITY

The Organization is substantially supported by contribution revenues, and considers contributions restricted for programs which are ongoing, major, and central to its operations to be available to meet cash needs for general expenditures. The Organization manages its liquidity and reserves following three guiding principles: operating within a prudent range of financial soundness and stability, maintaining adequate liquid assets to fund near-term operating needs, and maintaining sufficient reserves to provide reasonable assurance that long-term obligations will be discharged.

The following table reflects the Organization's financial assets as of June 30, 2021, reduced by amounts that are not available to meet general expenditures within one year of the statement of financial position date:

Cash and equivalents	$ 6,983,212
Investments	7,817,765
Unconditional promises to give	400,000
Grants receivable	400,734
Financial assets available to meet cash needs for general expenditures within one year	$ 15,601,711

NOTE 3. PROPERTY AND EQUIPMENT

Property and equipment consists of the following as of June 30, 2021:

Furniture and equipment	$ 49,901
Less: accumulated depreciation	(43,553)
	$ 6,348

NOTE 4. INVESTMENTS AND FAIR VALUE OF ASSETS

In accordance with FASB ASC, the following are quantitative disclosures about the fair value measurements. FASB ASC defines fair values as the amount that would be received from the sale of an asset or paid for the transfer of a liability in an orderly transaction between market participants, i.e. an exit price. Fair value measurements are categorized on three levels:

Level 1 – Valuations for assets and liabilities traded in active exchange markets. Valuations are obtained from readily available pricing.

Level 2 – Valuations for assets and liabilities traded in less active dealer or broker markets. Valuations are obtained from third-party pricing services for identical or similar assets or liabilities.

Level 3 – Valuations for assets and liabilities that are derived from other valuation methodologies and not based on market exchange or dealer/broker traded transactions. Valuations incorporate certain unobservable assumptions and projections in determining the fair value assigned.

The Organization's only assets valued at fair value are its investments. The Organization holds its investments as of June 30, 2021 as follows:

	Level 1	Total
Equities	$ 917,736	$ 917,736
Corporate bonds	4,012,733	4,012,733
Exchange traded funds	2,842,910	2,842,910
Real estate investment trusts	44,386	44,386
	$ 7,817,765	$ 7,817,765

NOTE 5. NET ASSETS WITH DONOR RESTRICTIONS

Net assets with donor restrictions represent contributions and other inflows of assets whose use by the Organization is limited by donor-imposed stipulations that either expire by passage of time or can be fulfilled and removed by actions of the Organization pursuant to those stipulations.

Net assets with donor restrictions are restricted for the following purposes as of June 30, 2021:

Subject to expenditures for specific purpose:	
Building Excellent Schools	$ 58,020
Dell Middle School Accelerator	25,000
	83,020
Subject to the passage of time:	
Unconditional promises to give	400,000
Total net assets with donor restrictions	$ 483,020

Net assets with donor restrictions consisted of the following at June 30, 2021:

Cash and equivalents	$ 83,020
Unconditional promises to give	400,000
	$ 483,020

Net assets were released from donor restrictions for the year ended June 30, 2021 by incurring expenses satisfying the restricted purposes as follows:

Building Excellent Schools	$ 91,500
Teach Plus	50,000
Investment in program partners	437,359
Clark County Education Initiatives	1,661,674
	$ 2,240,533

NOTE 6. OPERATING LEASE

The Organization had a non-cancelable operating lease for office space that expired during June 2021. Subsequent to year end, the Organization executed a new non-cancelable lease for office space expiring January 2025. Total future minimum lease payments are as follows as of June 30,:

2022	$ 16,258
2023	33,493
2024	34,559
2025	17,324
	$ 101,634

Rent expense related to this lease totaled $15,000 for the year ended June 30, 2021.

NOTE 7. CONCENTRATIONS

In the ordinary course of business, the Organization maintains cash deposits at financial institutions which, at most times, exceeds the amounts covered by the Federal Deposit Insurance Corporation (FDIC) limit of $250,000. The Organization has not experienced any losses on these deposits and management does not believe it is exposed to a significant credit risk related to these balances.

As of June 30, 2021, 63% of revenues recognized were from one source.

NOTE 8. EMPLOYEE BENEFIT PLAN

The Organization participates in a 401k defined contribution plan (the Plan) which is both employee and employer funded. All employees meeting the Plan's requirements are eligible to participate. The Organization is required to match up to 3% of qualified employee deferrals. During the year ended June 30, 2021, the Organization contributed a total of $15,803.

NOTE 9. PAYCHECK PROTECTION PROGRAM LOAN

On May 1, 2020, Opportunity 180 (the Borrower) qualified for and received a loan pursuant to the Paycheck Protection Program, a program implemented by the U.S. Small Business Administration (SBA) under the Coronavirus Aid, Relief, and Economic Security Act, from a qualified lender (the PPP Lender), for an aggregate principal amount of $89,466 (the PPP Loan). The PPP Loan bore interest at a fixed rate of 1.0% per annum, had a term of two years, and was unsecured and guaranteed by the SBA. During the year ended June 30, 2021, the PPP loan and all accrued interest was forgiven. As a result, $89,466 has been recognized on the statement of activities as contributions.

NOTE 10. RISKS AND UNCERTAINTIES

In March of 2020, the World Health Organization declared the spread of the Coronavirus Disease (COVID-19) a worldwide pandemic. The COVID-19 pandemic is having significant effects on global markets, supply chains, businesses and communities. Specific to Opportunity 180, COVID-19 may impact various parts of its future operations and financial results. Management believes Opportunity 180 is taking appropriate actions to mitigate the negative impact. However, the full impact of COVID-19 is unknown and cannot be reasonably estimated as these events are still developing.

OPPORTUNITY 180

AUDITED FINANCIAL STATEMENTS

JUNE 30, 2022

OPPORTUNITY 180

JUNE 30, 2022

TABLE OF CONTENTS

INDEPENDENT AUDITOR'S REPORT	1-3
STATEMENT OF FINANCIAL POSITION	4
STATEMENT OF ACTIVITIES	5
STATEMENT OF FUNCTIONAL EXPENSES	6
STATEMENT OF CASH FLOWS	7
NOTES TO FINANCIAL STATEMENTS	8-14
INDEPENDENT AUDITOR'S REPORT ON INTERNAL CONTROL OVER FINANCIAL REPORTING AND ON COMPLIANCE AND OTHER MATTERS BASED ON AN AUDIT OF FINANCIAL STATEMENTS PERFORMED IN ACCORDANCE WITH *GOVERNMENT AUDITING STANDARDS*	15-16
INDEPENDENT AUDITOR'S REPORT ON COMPLIANCE FOR EACH MAJOR PROGRAM AND ON INTERNAL CONTROL OVER COMPLIANCE REQUIRED BY THE UNIFORM GUIDANCE	17-19
SCHEDULE OF EXPENDITURES OF FEDERAL AWARDS	20
NOTES TO SCHEDULE OF EXPENDITURES OF FEDERAL AWARDS	21
SCHEDULE OF FINDINGS AND QUESTIONED COSTS	22

INDEPENDENT AUDITOR'S REPORT

Senior Management and
Board of Directors
Opportunity 180
Las Vegas, Nevada

Report on the Audit of the Financial Statements

Opinion

We have audited the accompanying financial statements of Opportunity 180 (the Organization) (a nonprofit organization), which comprise the statement of financial position as of June 30, 2022, and the related statements of activities, functional expenses, and cash flows for the year then ended, and the related notes to the financial statements.

In our opinion, the financial statements present fairly, in all material respects, the financial position of Opportunity 180 as of June 30, 2022, and the changes in its net assets and its cash flows for the year then ended in accordance with accounting principles generally accepted in the United States of America.

Basis for Opinion

We conducted our audit in accordance with auditing standards generally accepted in the United States of America and the standards applicable to financial audits contained in *Government Auditing Standards*, issued by the Comptroller General of the United States. Our responsibilities under those standards are further described in the Auditor's Responsibilities for the Audit of the Financial Statements section of our report. We are required to be independent of Opportunity 180 and to meet our other ethical responsibilities, in accordance with the relevant ethical requirements relating to our audit. We believe that the audit evidence we have obtained is sufficient and appropriate to provide a basis for our audit opinions.

Responsibilities of Management for the Financial Statements

Management is responsible for the preparation and fair presentation of the financial statements in accordance with accounting principles generally accepted in the United States of America, and for the design, implementation, and maintenance of internal control relevant to the preparation and fair presentation of financial statements that are free from material misstatement, whether due to fraud or error.

In preparing the financial statements, management is required to evaluate whether there are conditions or events, considered in the aggregate, that raise substantial doubt about Opportunity 180 ability to continue as a going concern within one year after the date that the financial statements are available to be issued.

Auditor's Responsibilities for the Audit of the Financial Statements

Our objectives are to obtain reasonable assurance about whether the financial statements as a whole are free from material misstatement, whether due to fraud or error, and to issue an auditor's report that includes our opinion. Reasonable assurance is a high level of assurance but is not absolute assurance and therefore is not a guarantee that an audit conducted in accordance with generally accepted auditing standards and *Government Auditing Standards* will always detect a material misstatement when it exists. The risk of not detecting a material misstatement resulting from fraud is higher than for one resulting from error, as fraud may involve collusion, forgery, intentional omissions, misrepresentations, or the override of internal control. Misstatements are considered material if there is a substantial likelihood that, individually or in the aggregate, they would influence the judgment made by a reasonable user based on the financial statements.

In performing an audit in accordance with generally accepted auditing standards and *Government Auditing Standards*, we:

- Exercise professional judgment and maintain professional skepticism throughout the audit.
- Identify and assess the risks of material misstatement of the financial statements, whether due to fraud or error, and design and perform audit procedures responsive to those risks. Such procedures include examining, on a test basis, evidence regarding the amounts and disclosures in the financial statements.
- Obtain an understanding of internal control relevant to the audit in order to design audit procedures that are appropriate in the circumstances, but not for the purpose of expressing an opinion on the effectiveness of Opportunity 180's internal control. Accordingly, no such opinion is expressed.
- Evaluate the appropriateness of accounting policies used and the reasonableness of significant accounting estimates made by management, as well as evaluate the overall presentation of the financial statements.
- Conclude whether, in our judgment, there are conditions or events, considered in the aggregate, that raise substantial doubt about Opportunity 180's ability to continue as a going concern for a reasonable period of time.

We are required to communicate with those charged with governance regarding, among other matters, the planned scope and timing of the audit, significant audit findings, and certain internal control-related matters that we identified during the audit.

Supplementary Information

Our audit was conducted for the purpose of forming an opinion on the financial statements as a whole. The accompanying schedule of expenditures of federal awards, as required by Title 2 U.S. *Code of Federal Regulations* Part 200, *Uniform Administrative Requirements, Cost Principles, and Audit Requirements for Federal Awards*, is presented for purposes of additional analysis and is not a required part of the financial statements. Such information is the responsibility of management and was derived from and relates directly to the underlying accounting and other records used to prepare the financial statements. The information has been subjected to the auditing procedures applied in the audit of the financial statements and certain additional procedures, including comparing and reconciling such information directly to the underlying accounting and other records used to prepare the financial statements or to the financial statements themselves, and other additional procedures in accordance with auditing standards generally accepted in the United States of America. In our opinion, the information is fairly stated, in all material respects, in relation to the financial statements as a whole.

Other Reporting Required by Government Auditing Standards

In accordance with *Government Auditing Standards*, we have also issued our report dated January 20, 2023, on our consideration of Opportunity 180's internal control over financial reporting and on our tests of its compliance with certain provisions of laws, regulations, contracts, and grant agreements and other matters. The purpose of that report is to describe the scope of our testing of internal control over financial reporting and compliance and the results of that testing, and not to provide an opinion on internal control over financial reporting or on compliance. That report is an integral part of an audit performed in accordance with *Government Auditing Standards* in considering Opportunity 180's internal control over financial reporting and compliance.

Haddsworth, Russo & Company, P.C.

Las Vegas, Nevada
January 20, 2023

OPPORTUNITY 180
STATEMENT OF FINANCIAL POSITION
JUNE 30, 2022

ASSETS	
CURRENT ASSETS	
Cash and equivalents	$ 7,441,590
Cash and equivalents, restricted	139,588
Investments	8,590,450
Unconditional promises to give	881,500
Grants receivable	622,569
Prepaid expenses	7,421
	17,683,118
OTHER ASSETS	
Property and equipment, net	2,846
Unconditional promises to give, noncurrent, net	2,305,356
Deposits	4,074
	$ 19,995,394
LIABILITIES AND NET ASSETS	
CURRENT LIABILITIES	
Accounts payable	$ 198,661
Accrued expenses	70,764
Grants payable	583,039
Funds held for others	16,231
	868,695
NET ASSETS	
Without donor restrictions	15,800,255
With donor restrictions	3,326,444
Total net assets	19,126,699
Total liabilities and net assets	$ 19,995,394

See accompanying notes to financial statements.

OPPORTUNITY 180
STATEMENT OF ACTIVITIES
FOR THE YEAR ENDED JUNE 30, 2022

NET ASSETS WITHOUT DONOR RESTRICTIONS	
Revenue, gains, and other support:	
Contributions	$ 7,809,429
Grant revenue	3,009,682
Gain on disposal of property and equipment	650
Total revenue, gains, and other support	10,819,761
Expenses and losses:	
Program services	6,681,875
Support services	
Management and general	610,172
Fundraising	121,929
Total expenses	7,413,976
Investment return, net	536,206
	7,950,182
Change in net assets without donor restrictions	2,869,579
NET ASSETS WITH DONOR RESTRICTIONS	
Contributions	2,843,424
Change in net assets with donor restrictions	2,843,424
CHANGE IN NET ASSETS	5,713,003
NET ASSETS, BEGINNING OF YEAR	13,413,696
NET ASSETS, END OF YEAR	$ 19,126,699

See accompanying notes to financial statements.

OPPORTUNITY 180
STATEMENT OF FUNCTIONAL EXPENSES
FOR THE YEAR ENDED JUNE 30, 2022

	Program Services	Support Services: Management and General	Support Services: Fundraising	Total
Salaries and wages	$ 540,584	$ 141,219	$ 86,946	$ 768,749
Payroll taxes and related	40,926	10,692	6,583	58,201
Employee benefits	53,853	14,068	8,661	76,582
Grants	3,188,125	-	-	3,188,125
Community and educational outreach	2,735,674	-	-	2,735,674
Advertising	-	3,412	-	3,412
Consulting	-	293,750	-	293,750
Depreciation	2,463	643	396	3,502
Dues and subscriptions	17,314	4,523	2,785	24,622
Insurance	11,406	2,980	1,835	16,221
Meals	12,770	3,336	2,054	18,160
Occupancy	26,254	6,859	4,223	37,336
Office	23,576	6,159	3,792	33,527
Printing and publications	1,297	339	209	1,845
Professional fees	-	114,973	-	114,973
Telephone	3,960	1,035	637	5,632
Travel	23,673	6,184	3,808	33,665
	$ 6,681,875	$ 610,172	$ 121,929	$ 7,413,976

See accompanying notes to financial statements.

OPPORTUNITY 180
STATEMENT OF CASH FLOWS
FOR THE YEAR ENDED JUNE 30, 2022

CASH FLOWS FROM OPERATING ACTIVITIES	
Change in net assets	$ 5,713,003
Adjustments to reconcile change in net assets to net cash provided by (used in) operating activities:	
Depreciation	3,502
Realized and unrealized loss on investments	786,781
Change in discount on unconditional promises to give	94,644
Gain on sales of property and equipment	(650)
(Increase) decrease in operating assets:	
Unconditional promises to give	(2,881,500)
Grants receivable	(221,835)
Prepaid expenses	(752)
Deposits	(2,824)
Increase (decrease) in operating liabilities:	
Accounts payable	81,959
Accrued expenses	7,151
Grants payable	(1,258,913)
Funds held for others	(163,784)
Net cash provided by operating activities	2,156,782
CASH FLOWS FROM INVESTING ACTIVITIES	
Proceeds from sale of property and equipment	650
Purchases of investments	(5,611,486)
Proceeds from the sales of investments	4,052,020
Net cash used in investing activities	(1,558,816)
CHANGE IN CASH AND EQUIVALENTS	597,966
CASH AND EQUIVALENTS, BEGINNING OF YEAR	6,983,212
CASH AND EQUIVALENTS, END OF YEAR	$ 7,581,178
SUMMARY OF CASH ACCOUNTS	
Cash and equivalents	$ 7,441,590
Cash and equivalents, restricted	139,588
	$ 7,581,178

See accompanying notes to financial statements.

OPPORTUNITY 180
NOTES TO FINANCIAL STATEMENTS
JUNE 30, 2022

NOTE 1. SUMMARY OF SIGNIFICANT ACCOUNTING POLICIES

Nature of Activities

Opportunity 180 (the Organization) was incorporated August 26, 2014, under the laws of the State of Nevada. The Organization is a nonprofit entity that recruits and supports high quality public charter schools to provide children in Southern Nevada with an excellent education and supports local education entrepreneurs wishing to create high quality public charter schools. The Organization is supported primarily through donor contributions and governmental grants.

Basis of Accounting

The accompanying financial statements have been prepared on the accrual basis of accounting in accordance with accounting principles generally accepted in the United States of America, and, accordingly, reflect all significant receivables, payables, and other liabilities.

Basis of Presentation

Financial statement presentation follows the recommendations of the Financial Accounting Standards Board (FASB) in its Accounting Standards Codification (ASC) 958-205. Under ASC 958-205, the Organization is required to report information regarding its financial position and activities according to two classes of net assets: net assets with donor restrictions and net assets without donor restrictions.

Income Tax Status

The Organization is a not-for-profit organization as described in Section 501(c)(3) of the Internal Revenue Code and is generally exempt from income taxes on related income pursuant to the appropriate section of the Internal Revenue Code.

Use of Estimates

Timely preparation of financial statements in conformity with accounting principles generally accepted in the United States of America requires management to make estimates and assumptions that affect certain reported amounts and disclosures, some of which may need revision in future periods. Accordingly, actual results may differ from those estimates.

Cash and Equivalents

For the purpose of the statement of cash flows, the Organization considers all highly-liquid investments with an initial maturity of three months or less and money market funds to be cash equivalents.

Investments

The Organization carries investments in marketable securities with readily determinable fair values at fair market value in the statement of financial position. Unrealized gains and losses are included in the change in net assets in the accompanying statement of activities.

NOTE 1. SUMMARY OF SIGNIFICANT ACCOUNTING POLICIES (CONTINUED)

Property and Equipment

Property and equipment are carried at cost or, if donated, at the approximate fair value at the date of donation. Depreciation is computed using the straight-line method over the estimated useful life of the asset. The Organization capitalizes items with a cost basis in excess of $500 and with a useful life of greater than one year.

Impairment of Long-Lived Assets

The Organization reviews long-lived assets for impairment whenever events or changes in circumstances indicate that the carrying amount of an asset may not be recoverable. Recoverability of assets to be held and used is measured by a comparison of the carrying amount of an asset to future net undiscounted cash flows expected to be generated by the asset. If such assets are considered to be impaired, the impairment to be recognized is measured by the amount which the carrying amount of the assets exceeds the fair value of the assets.

Revenue Recognition

Contributions received are recorded as increases in net assets with or without restrictions, depending on the existence and/or nature of any donor restrictions. Support that is restricted by the donor is reported as an increase in net assets without donor restrictions if the restriction expires in the reporting period in which the support is recognized. All other donor-restricted support is reported as an increase in net assets with donor restrictions, depending on the nature of the restriction. When a restriction expires (that is, when a stipulated time restriction ends or purpose restriction is accomplished), net assets with donor restrictions are reclassified to net assets without donor restrictions and reported in the statement of activities as net assets released from restrictions.

Unconditional Promises to Give

Unconditional promises to give represent promises from donors to give to the Organization. Contributions are recognized when the donor makes a promise to give to the Organization that is, in substance, unconditional. Conditional promises to give are recognized at fair value when the conditions on which they depend are substantially met. Unconditional promises to give are stated at the amount management expects to collect from outstanding balances. It is the Organization's policy to charge off uncollectible balances when management determines the receivable will not be collected. As of June 30, 2022, 77% of the balance is due from one donor and the entire balance is expected to be collectible.

Grants Receivable

Grants receivable represents grant monies that have not been received but are owed to the Organization. Grants receivable is stated at the amounts management expects to collect. As of June 30, 2022, the entire balance is due from one source and expected to be collected within one year.

NOTE 1. SUMMARY OF SIGNIFICANT ACCOUNTING POLICIES (CONTINUED)

Deposits

Deposits represent security deposits paid by the Organization under the terms of a lease agreement for office space.

Grants Payable

The Organization makes irrevocable commitments to grant funds to other organizations with missions similar to that of the Organization. As of June 30, 2022, all such grants are expected to be paid within one year.

Funds Held for Others

The Organization acts as a fiscal agent for a proposed charter school in Southern Nevada. The Organization collects contributions on the school's behalf and remits funds to the school or on its behalf at the school's discretion.

Donated Services

Donated services are recognized as contributions in accordance with accounting principles generally accepted in the United States of America if the services (a) create or enhance nonfinancial assets or (b) require specialized skills, are provided by individuals possessing those skills, and would otherwise be purchased by the Organization. During the year ended June 30, 2022, the Organization did not receive any donated services meeting these qualifications.

Advertising

The Organization expenses all advertising costs as they are incurred.

Functional Allocation of Expenses

The costs of providing program and other activities have been summarized on a functional basis in the statement of activities. Accordingly, certain costs have been allocated among program and supporting services benefited. Such allocations are determined by management on an equitable basis.

The following expenses were directly allocated by function based on the nature of the expense: grants, community and educational outreach, advertising, consulting, and professional fees.

The following expenses were allocated on the basis of employee time and effort: salaries and wages, payroll taxes and related, employee benefits, depreciation, dues and subscriptions, insurance, meals, occupancy, office, printing and publications, telephone, and travel.

Date of Management's Review

Subsequent events have been evaluated through January 20, 2023, which is the date the financial statements were available to be issued.

NOTE 2. INFORMATION REGARDING LIQUIDITY AND AVAILABILITY

The Organization is substantially supported by grant and contribution revenues and considers contributions restricted for programs which are ongoing, major, and central to its operations to be available to meet cash needs for general expenditures. The Organization manages its liquidity and reserves following three guiding principles: operating within a prudent range of financial soundness and stability, maintaining adequate liquid assets to fund near-term operating needs, and maintaining sufficient reserves to provide reasonable assurance that long-term obligations will be discharged.

The following table reflects the Organization's financial assets as of June 30, 2022, reduced by amounts that are not available to meet general expenditures within one year of the statement of financial position date:

Cash and equivalents	$ 7,581,178
Investments	8,590,450
Unconditional promises to give	881,500
Grants receivable	622,569
Financial assets available to meet cash needs for general expenditures within one year	$ 17,675,697

NOTE 3. PROPERTY AND EQUIPMENT

Property and equipment consists of the following as of June 30, 2022:

Furniture and equipment	$ 46,335
Less: accumulated depreciation	(43,489)
	$ 2,846

NOTE 4. INVESTMENTS AND FAIR VALUE OF ASSETS

In accordance with FASB ASC, the following are quantitative disclosures about the fair value measurements. FASB ASC defines fair values as the amount that would be received from the sale of an asset or paid for the transfer of a liability in an orderly transaction between market participants, i.e. an exit price. Fair value measurements are categorized on three levels:

Level 1 – Valuations for assets and liabilities traded in active exchange markets. Valuations are obtained from readily available pricing.

Level 2 – Valuations for assets and liabilities traded in less active dealer or broker markets. Valuations are obtained from third-party pricing services for identical or similar assets or liabilities.

Level 3 – Valuations for assets and liabilities that are derived from other valuation methodologies and not based on market exchange or dealer/broker traded transactions. Valuations incorporate certain unobservable assumptions and projections in determining the fair value assigned.

The Organization's only assets valued at fair value are its investments. The Organization holds its investments as of June 30, 2022 as follows:

	Level 1	Total
Equities	$ 797,792	$ 797,792
Corporate bonds	5,235,456	5,235,456
Exchange traded funds	2,518,902	2,518,902
Real estate investment trusts	38,300	38,300
	$ 8,590,450	$ 8,590,450

NOTE 5. UNCONDITIONAL PROMISES TO GIVE

Unconditional promises to give consist of the following as of June 30, 2022:

Receivable in less than one year	$ 881,500
Receivable in one to five years	2,400,000
Total unconditional promises to give	3,281,500
Less: unamortized discount at 1.15%	94,644
Unconditional promises to give, net	3,186,856
Less: current portion	881,500
	$ 2,305,356

NOTE 6. NET ASSETS WITH DONOR RESTRICTIONS

Net assets with donor restrictions represent contributions and other inflows of assets whose use by the Organization is limited by donor-imposed stipulations that either expire by passage of time or can be fulfilled and removed by actions of the Organization pursuant to those stipulations.

Net assets with donor restrictions are restricted for the following purposes as of June 30, 2022:

Subject to expenditures for specific purpose:	
Building Excellent Schools	$ 58,020
The Surge Academy Las Vegas	12,500
Dell Middle School Accelerator	69,068
	139,588
Subject to the passage of time:	
Unconditional promises to give	3,186,856
Total net assets with donor restrictions	$ 3,326,444

Net assets with donor restrictions consisted of the following at June 30, 2022:

Cash and equivalents	$ 139,588
Unconditional promises to give	3,186,856
	$ 3,326,444

No net assets were released from donor restrictions for the year ended June 30, 2022 by incurring expenses satisfying the restricted purposes.

NOTE 7. OPERATING LEASE

The Organization has a non-cancelable operating lease for office space expiring during January 2025. Total future minimum lease payments are as follows as of June 30,:

2023	$ 33,493
2024	34,559
2025	17,324
	$ 85,376

Rent expense related to this lease totaled $16,258 for the year ended June 30, 2022.

NOTE 8. CONCENTRATIONS

In the ordinary course of business, the Organization maintains cash deposits at financial institutions which, at most times, exceeds the amounts covered by the Federal Deposit Insurance Corporation (FDIC) limit of $250,000. The Organization has not experienced any losses on these deposits and management does not believe it is exposed to a significant credit risk related to these balances.

NOTE 9. EMPLOYEE BENEFIT PLAN

The Organization participates in a 401k defined contribution plan (the Plan) which is both employee and employer funded. All employees meeting the Plan's requirements are eligible to participate. The Organization is required to match up to 3% of qualified employee deferrals. During the year ended June 30, 2022, the Organization contributed a total of $16,440.

INDEPENDENT AUDITOR'S REPORT ON INTERNAL CONTROL OVER FINANCIAL REPORTING AND ON COMPLIANCE AND OTHER MATTERS BASED ON AN AUDIT OF FINANCIAL STATEMENTS PERFORMED IN ACCORDANCE WITH *GOVERNMENT AUDITING STANDARDS*

Senior Management and
Board of Directors
Opportunity 180
Las Vegas, Nevada

We have audited, in accordance with the auditing standards generally accepted in the United States of America and the standards applicable to financial audits contained in *Government Auditing Standards* issued by the Comptroller General of the United States, financial statements of Opportunity 180 (the Organization), which comprise the statement of financial position as of June 30, 2022, and the related statement of activities, functional expenses, and cash flows for the year then ended, and the related notes to the financial statements, and have issued our report thereon dated January 20, 2023.

Report on Internal Control over Financial Reporting

In planning and performing our audit of the financial statements, we considered the Organization's internal control over financial reporting (internal control) as a basis for designing audit procedures that are appropriate in the circumstances for the purpose of expressing our opinion on the financial statements, but not for the purpose of expressing an opinion on the effectiveness of the Organization's internal control. Accordingly, we do not express an opinion on the effectiveness of the Organization's internal control.

A *deficiency in internal control* exists when the design or operation of a control does not allow management or employees, in the normal course of performing their assigned functions, to prevent, or detect and correct, misstatements, on a timely basis. A *material weakness* is a deficiency, or a combination of deficiencies, in internal control, such that there is a reasonable possibility that a material misstatement of the entity's financial statements will not be prevented, or detected and corrected, on a timely basis. A *significant deficiency* is a deficiency, or a combination of deficiencies, in internal control that is less severe than a material weakness, yet important enough to merit attention by those charged with governance.

Our consideration of the internal control was for the limited purpose described in the first paragraph of this section and was not designed to identify all deficiencies in internal control that might be material weaknesses or significant deficiencies. Given these limitations, during our audit we did not identify any deficiencies in internal control that we consider to be material weaknesses. However, material weaknesses or significant deficiencies may exist that were not identified.

Report on Compliance and Other Matters

As part of obtaining reasonable assurance about whether the Organization's financial statements are free from material misstatement, we performed tests of its compliance with certain provisions of laws, regulations, contracts, and grant agreements, noncompliance with which could have a direct and material effect on the financial statements. However, providing an opinion on compliance with those provisions was not an objective of our audit, and accordingly, we do not express such an opinion. The results of our tests disclosed no instances of noncompliance or other matters that are required to be reported under *Government Auditing Standards*.

Purpose of this Report

The purpose of this report is solely to describe the scope of our testing of internal control and compliance and the results of that testing, and not to provide an opinion on the effectiveness of the entity's internal control or on compliance. This report is an integral part of an audit performed in accordance with *Government Auditing Standards* in considering the entity's internal control and compliance. Accordingly, this communication is not suitable for any other purpose.

Holdsworth, Russo & Company, P.C.

Las Vegas, Nevada
January 20, 2023

INDEPENDENT AUDITOR'S REPORT ON COMPLIANCE FOR EACH MAJOR PROGRAM AND ON INTERNAL CONTROL OVER COMPLIANCE REQUIRED BY THE UNIFORM GUIDANCE

Senior Management and
Board of Directors
Opportunity 180
Las Vegas, Nevada

Report on Compliance for Each Major Federal Program

Opinion on Each Major Federal Program

We have audited Opportunity 180's (the Organization) compliance with the types of compliance requirements identified as subject to audit in the OMB *Compliance Supplement* that could have a direct and material effect on each of the Organization's major federal programs for the year ended June 30, 2022. The Organization's major federal programs are identified in the summary of auditor's results section of the accompanying schedule of findings and questioned costs.

In our opinion, Opportunity 180 complied, in all material respects, with the types of compliance requirements referred to above that could have a direct and material effect on each of its major federal programs for the year ended June 30, 2022.

Basis for Opinion on Each Major Federal Program

We conducted our audit of compliance in accordance with auditing standards generally accepted in the United States of America; the standards applicable to financial audits contained in *Government Auditing Standards*, issued by the Comptroller General of the United States; and the audit requirements of Title 2 U.S. *Code of Federal Regulations* Part 200, *Uniform Administrative Requirements, Cost Principles, and Audit Requirements for Federal Awards* (Uniform Guidance). Our responsibilities under those standards and the Uniform Guidance are further described in the Auditor's Responsibilities for the Audit of Compliance section of our report.

We are required to be independent of the Organization and to meet our other ethical responsibilities, in accordance with relevant ethical requirements relating to our audit. We believe that the audit evidence we have obtained is sufficient and appropriate to provide a basis for our opinion on compliance for each major federal program. Our audit does not provide a legal determination of the Organization's compliance with the compliance requirements referred to above.

Responsibilities of Management for Compliance

Management is responsible for compliance with the requirements referred to above and for the design, implementation, and maintenance of effective internal control over compliance with the requirements of laws, statutes, regulations, rules, and provisions of contracts or grant agreements applicable to the Organization's federal programs.

Auditor's Responsibilities for the Audit of Compliance

Our objectives are to obtain reasonable assurance about whether material noncompliance with the compliance requirements referred to above occurred, whether due to fraud or error, and express an opinion on the Organization's compliance based on our audit. Reasonable assurance is a high level of assurance but is not absolute assurance and therefore is not a guarantee that an audit conducted in accordance with generally accepted auditing standards, *Government Auditing Standards*, and the Uniform Guidance will always detect material noncompliance when it exists. The risk of not detecting material noncompliance resulting from fraud is higher than for that resulting from error, as fraud may involve collusion, forgery, intentional omissions, misrepresentations, or the override of internal control.

Noncompliance with the compliance requirements referred to above is considered material if there is a substantial likelihood that, individually or in the aggregate, it would influence the judgment made by a reasonable user of the report on compliance about the Organization's compliance with the requirements of each major federal program as a whole.

In performing an audit in accordance with generally accepted auditing standards, *Government Auditing Standards*, and the Uniform Guidance, we:

- Exercise professional judgment and maintain professional skepticism throughout the audit.
- Identify and assess the risks of material noncompliance, whether due to fraud or error, and design and perform audit procedures responsive to those risks. Such procedures include examining, on a test basis, evidence regarding the Organization's compliance with the compliance requirements referred to above and performing such other procedures as we considered necessary in the circumstances.
- Obtain an understanding of the Organization's internal control over compliance relevant to the audit in order to design audit procedures that are appropriate in the circumstances and to test and report on internal control over compliance in accordance with the Uniform Guidance, but not for the purpose of expressing an opinion on the effectiveness of the Organization's internal control over compliance. Accordingly, no such opinion is expressed.

We are required to communicate with those charged with governance regarding, among other matters, the planned scope and timing of the audit and any significant deficiencies and material weaknesses in internal control over compliance that we identified during the audit.

Report on Internal Control over Compliance

A *deficiency in internal control over compliance* exists when the design or operation of a control over compliance does not allow management or employees, in the normal course of performing their assigned functions, to prevent, or detect and correct, noncompliance with a type of compliance requirement of a federal program on a timely basis. A *material weakness in internal control over compliance* is a deficiency, or a combination of deficiencies, in internal control over compliance, such that there is a reasonable possibility that material noncompliance with a type of compliance requirement of a federal program will not be prevented, or detected and corrected, on a timely basis. A *significant deficiency in internal control over compliance* is a deficiency, or a combination of deficiencies, in internal control over compliance with a type of compliance requirement of a federal program that is less severe than a material weakness in internal control over compliance, yet important enough to merit attention by those charged with governance.

Our consideration of internal control over compliance was for the limited purpose described in the Auditor's Responsibilities for the Audit of Compliance section above and was not designed to identify all deficiencies in internal control over compliance that might be material weaknesses or significant deficiencies in internal control over compliance. Given these limitations, during our audit we did not identify any deficiencies in internal control over compliance that we consider to be material weaknesses, as defined above. However, material weaknesses or significant deficiencies in internal control over compliance may exist that were not identified.

Our audit was not designed for the purpose of expressing an opinion on the effectiveness of internal control over compliance. Accordingly, no such opinion is expressed.

The purpose of this report on internal control over compliance is solely to describe the scope of our testing of internal control over compliance and the results of that testing based on the requirements of the Uniform Guidance. Accordingly, this report is not suitable for any other purpose.

Holdsworth, Russo & Company, P.C.

Las Vegas, Nevada
January 20, 2023

OPPORTUNITY 180
SCHEDULE OF EXPENDITURES OF FEDERAL AWARDS
FOR THE YEAR ENDED JUNE 30, 2022

Grantor Agency	Program Title	Federal Assistance Listing Number	Total Federal Expenditures	Passed Through to Subrecipients
U.S. Department of Education	Expanding Opportunity Through Quality Charter Schools Program (CSP)	84.282	$ 3,009,682	$ 2,790,505

See notes to schedule of expenditures of federal awards.

OPPORTUNITY 180
NOTES TO THE SCHEDULE OF EXPENDITURES OF FEDERAL AWARDS
FOR THE YEAR ENDED JUNE 30, 2022

NOTE 1. BASIS OF PRESENTATION

The accompanying schedule of expenditures of federal awards includes federal award activity of Opportunity 180 (the Organization) under programs of the federal government for the year ended June 30, 2022. The information in the schedule is presented in accordance with the requirements of Title 2 U.S. *Code of Federal Regulations* Part 200, *Uniform Administrative Requirements, Cost Principles, and Audit Requirements for Federal Awards* (Uniform Guidance). Because this schedule only presents a selected portion of the operations of the Organization, it is not intended to and does not present the financial position, changes in net assets, functional expenses, or cash flows of the Organization.

NOTE 2. SUMMARY OF SIGNIFICANT ACCOUNTING POLICIES

The schedule of expenditures of federal awards is prepared on the accrual basis of accounting. Such expenditures are recognized following the cost principles contained in the Uniform Guidance.

The Organization elected not to use the 10 percent de minimis indirect cost rate as allowed under Uniform Guidance.

OPPORTUNITY 180
SCHEDULE OF FINDINGS AND QUESTIONED COSTS
FOR THE YEAR ENDED JUNE 30, 2022

SUMMARY OF AUDITOR'S RESULTS

Financial Statements

1. The auditor's report expresses an unmodified opinion on the financial statements of Opportunity 180 (the Organization).

2. No material weaknesses or significant deficiencies related to the audit of the financial statements, which would be required to be reported in accordance with *Government Auditing Standards*, were disclosed during the audit.

3. No instances of noncompliance material to the financial statements of the Organization, which would be required to be reported in accordance with *Government Auditing Standards*, were disclosed during the audit.

Federal Awards

4. No material weaknesses or significant deficiencies related to the audit of the major federal award program are reported in the Independent Auditor's Report on Compliance for Each Major Program and on Internal Control Over Compliance Required by the Uniform Guidance.

5. The auditor's report on compliance for the Organization expresses an unmodified opinion.

6. There are no audit findings that are required to be reported in accordance with 2 CFR 200.516(a).

7. The program tested as a major program was the U.S. Department of Education, Expanding Opportunity Through Quality Charter Schools Program (CSP), Assistance Listing Number 84.282.

8. The threshold used for distinguishing between Type A and Type B programs was $750,000.

9. The Organization does not qualify as a low-risk auditee.

FINDINGS AND QUESTIONED COSTS – FINANCIAL STATEMENT AUDIT

None.

FINDINGS AND QUESTIONED COSTS – MAJOR FEDERAL AWARDS PROGRAM AUDIT

None.

Opportunity 180
2023 Operating Budget
CSP & Outside Contract Programming Included
Revision 2022-07-06

Net Assets		Amount
	Net Assets 6/30/2022	20,437,915

Revenue		Amount	Great Schools 101	Engaged Community 102	Good Governance 103	Good Data 104	Good Ideas 105	CSP - Subgrants 107	CSP - Admin 107a	CSP - Techincal Assistance 107t	Fundraising 710	Management & General 810
40000	Unrestricted Contributions	150,000	-	-	-	-	-	-	-	-	-	150,000
41000	Restricted Contributions	9,249,185	3,250,000	-	-	-	153,125	5,392,600	82,589	370,871	-	-
46430	Investment Income	-	-	-	-	-	-	-	-	-	-	-
	Total Revenue 2023	**9,399,185**	**3,250,000**	**-**	**-**	**-**	**153,125**	**5,392,600**	**82,589**	**370,871**	**-**	**150,000**

Expenses	Category	Amount	Great Schools 101	Engaged Community 102	Good Governance 103	Good Data 104	Good Ideas 105	CSP - Subgrants 107	CSP - Admin 107a	CSP - Technical Assistance 107t	Fundraising 710	Management & General 810
60500	Bank Charge	3,600	-	-	-	-	-	-	-	-	-	3,600
60920	Business Registration Fees	650	-	-	-	-	-	-	-	-	-	650
62110	Accounting Fees	53,500	-	-	-	-	-	-	-	-	-	53,500
62120	Lobbying Expense	72,500	14,500	14,500	14,500	14,500	14,500	-	-	-	-	-
62140	Legal Fees	12,000	-	-	-	-	-	-	-	-	-	12,000
62150	Outside Contract Services - Internal	725,930	507,825	106,633	20,325	45,658	22,205	-	-	-	-	23,284
62151	Outside Contract Services - Programming	1,298,000	550,000	-	2,000	-	661,900	-	15,500	68,600	-	-
62155	Public Relations	52,500	-	52,500	-	-	-	-	-	-	-	-
62840	Equip Rental and Maint	3,000	-	-	-	-	-	-	-	-	-	3,000
62890	Rent, Parking, Utilities	59,218	-	-	-	-	-	-	-	-	-	59,218
65010	Books, Subscriptions, Ref	2,800	-	-	-	-	-	-	-	-	-	2,800
65020	Postage, Mailing Service	375	-	-	-	-	-	-	-	-	-	375
65030	Printing and Copying	6,000	-	-	-	-	-	-	-	-	-	6,000
65040	Supplies	45,886	-	-	-	-	13,915	-	12,314	8,657	-	11,000
65050	Telephone, Telecommunications	9,900	-	-	-	-	-	-	-	-	-	9,900
65070	Software Subscription	10,051	921	721	1,377	921	627	-	-	-	-	5,487
65080	Health and Wellness	6,600	-	-	-	-	-	-	-	-	-	6,600
65110	Meals & Entertainment	28,025	857	857	857	1,457	22,282	-	-	-	857	858
65120	Insurance- Liability, D&O	12,900	-	-	-	-	-	-	-	-	-	12,900
66000	Payroll Expenses	1,431,113	197,665	141,522	132,775	130,524	331,480	-	42,027	92,040	136,961	226,118
66300	Employee Benefits	36,505	5,558	3,906	3,455	3,605	10,215	-	-	-	3,005	6,760
68300	Conferences, Conventions & Meetings	52,177	-	15,000	3,000	-	28,100	-	6,077	-	-	-
68321	Airfare	7,000	-	7,000	-	-	-	-	-	-	-	-
68322	Hotel	4,600	-	4,600	-	-	-	-	-	-	-	-
68325	Meals	1,900	-	1,900	-	-	-	-	-	-	-	-
69000	Travel - Internal	84,045	-	10,000	-	-	30,800	-	6,671	11,574	25,000	-
69400	Grants Paid to Organizations	7,968,868	780,000	1,065,000	-	-	541,268	5,392,600	-	190,000	-	-
	Total Expenses 2023	**11,989,643**	**2,057,326**	**1,424,139**	**178,289**	**196,665**	**1,677,292**	**5,392,600**	**82,589**	**370,871**	**165,822**	**444,050**

Net Assets		Amount
	Net Assets 6/30/2023	**17,847,457**
	Planned Revenue	9,399,185
	Projected CSP	-
	Projected Total Revenue	9,399,185
	Expenses	(11,989,643)
	Projected inc/(dec) in Net Assets	(2,590,458)

091005

BARBARA K. CEGAVSKE
Secretary of State
202 North Carson Street
Carson City, Nevada 89701-4201
(775) 684-5708
Website: www.nvsos.gov

Nonprofit Amendment (Before First Meeting)

(PURSUANT TO NRS CHAPTERS 81 AND 82)

USE BLACK INK ONLY - DO NOT HIGHLIGHT

ABOVE SPACE IS FOR OFFICE USE ONLY

Certificate of Amendment to Articles of Incorporation For Nonprofit Corporations

(Pursuant to NRS Chapters 81 and 82 - Before First Meeting of Directors)

1. Name of corporation:
OPPORTUNITY 180

2. The articles have been amended as follows: (provide article numbers, if available)
1. I reformatted the revised Articles of Incorporation to have Articles broken down by number and description.
2. I included the location of our principal office in Article II to a broader definition of City of Las Vegas, County of Clark.
3. I revised our purpose in Article III: "to improve the quality of preK-12th grade education for children in high need Nevada communities.
4. Article IV defines prohibited activities and construction of the articles
5. Article V includes our initial trustees until we hold an election at our first annual meeting.
6. Article VI removes personal liability from members, officers, or directors of the corporations.
7. Article VII strengthens the language of our duration and dissolution article to require the corporation to dispose of all assets to a non profit corporation exclusively for charitable or educational purposes.
8. Article VIII states that any amendment may be adopted with 2/3 of the board of directors' vote

3. The undersigned are a majority of the original incorporators of the nonprofit corporation, or the majority necessary for the approval as otherwise provided by NRS.

4. As of the date of this certification no meeting of the directors has taken place and the corporation has no members other than the incorporators.

5. Effective date and time of filing: (optional) Date: Time:
(must not be later than 90 days after the certificate is filed)

6. Signatures: (If more than two signatures, attach an 8 1/2" x 11" plain sheet with the additional signatures.)

X _____
Signature of Incorporator

X _____
Signature of Incorporator

FILING FEE: $50.00

IMPORTANT: Failure to include any of the above information and submit with the proper fees may cause this filing to be rejected.

Nevada Secretary of State Amend Nonprofit Before

ARTICLES OF INCORPORATION

OF

OPPORTUNITY 180

The undersigned, desiring to form a nonprofit charitable corporation under the Nonprofit Corporation Law of Nevada, Chapter 82 of the Nevada Revised Statutes, hereby certifies:

ARTICLE I

Name

The name of the Corporation shall be: OPPORTUNITY 180

ARTICLE II

Principal Office

The place in the state of Nevada where the principal office of the Corporation is located is the City of Las Vegas, County of Clark.

ARTICLE III

Purposes

The Corporation is organized and shall be operated exclusively for charitable and educational purposes within the meaning of section 501(c)(3) of the Internal Revenue Code of 1986, as amended (the "Code") and to such end the Corporation is organized and shall be operated as a charitable organization to improve the quality of pre-K – 12th grade education for children in high-need Nevada communities.

ARTICLE IV

Prohibited Activities and Construction of Articles

a. No part of the property or earnings of the Corporations shall inure to the benefit of, or be distributable to, the Corporation's members, trustees, officers or private individuals, except that the Corporation shall be authorized and empowered to pay reasonable compensation for services rendered or furnished, and to make payments and distributions in furtherance of the purposes set forth in ARTICLE III of these Articles.

b. The Corporation shall not participate or intervene in (including the publishing or distributing of statements), any political campaign on behalf of (or in opposition to) any candidate for public office.

c. The Corporation shall not carry on propaganda or otherwise attempt to influence legislation to such an extent that would result in the loss of exemptions under section 501(c)(3) of the Code.

d. It is intended that this Corporation shall have and continue to have the status of a corporation which is exempt from federal income tax pursuant to section 501(a) of the Code as an organization described in section 501(c)(3) of the Code.

e. Notwithstanding any other provision of these Articles, the Corporation shall not carry on any activities not permitted to be carried on by an organization (a) exempt from federal income tax under section 501(c)(3) of the Code; (b) contributions to which are deductible for federal income tax purposes under section 170(c)(2) of the Code. These Articles shall be construed

accordingly, and all powers and activities hereunder shall be limited accordingly.

ARTICLE V

Trustees

The following persons share serve OPPORTUNITY 180 as the trustees until the first annual meeting called to elect trustees. Their names are as follows:

Name	Address
Lindy Schumacher	11035 Lavender Hill Drive Ste 160-180 Las Vegas, NV 89135
Steve McCracken	11035 Lavender Hill Drive Ste 160-180 Las Vegas, NV 89135
Jonathan Sanborn	11035 Lavender Hill Drive Ste 160-180 Las Vegas, NV 89135
Colin Seale	11035 Lavender Hill Drive Ste 160-180 Las Vegas, NV 89135

Members of the initial board of directors shall serve until the first annual meeting, at which their successors will be duly elected and qualified, or removed as provided in the bylaws.

ARTICLE VI

Personal Liability

No member, officer, or director of this corporation shall be personally liable for the debts or obligations of this corporation of any nature whatsoever, nor shall any of the property of the members, officers, or directors be subject to the payment of the debts or obligations of this corporation.

ARTICLE VII

Duration and Dissolution

The duration of the corporate existence shall be perpetual until dissolution.

Upon the dissolution of the Corporation, the Board of Trustees of this Corporation, after paying or making provision for the payment of all known liabilities of the Corporation, shall dispose of all the assets of this Corporation exclusively for charitable or educational purposes by contributing the same to such organization or organizations organized and operated exclusively for charitable or educational purposes and described in section 501(c)(3) of the Code, as the Board of Trustees shall determine. Any of such assets not so disposed of shall be disposed of as directed by the Board of Trustees, exclusively for charitable or educational purposes.

ARTICLE VIII

Amendments

Any amendment to the Articles of Incorporation may be adopted by approval of two-thirds (2/3) of the board of directors.

Article IX

Any reference in these Articles of Incorporation to a section of the Code shall be deemed to include the corresponding provisions of any applicable future United States revenue law, from and after the effective date of any such future law.

Opportunity 180
EIN # 61-1753910

11035 Lavender Hill Drive
Ste 160-180
Las Vegas, Nevada 89135

Application for Recognition of Exemption
(IRS Form 1023)

EXHIBIT A

NEVADA SECRETARY OF STATE

ORIGINAL ARTICLES OF ORGANIZATION
AND
CERTIFIED AMENDMENTS TO ARTICLES OF ORGANIZATION

SECRETARY OF STATE



CERTIFICATE OF EXISTENCE

(INCLUDING AMENDMENTS)

I, BARBARA K. CEGAVSKE, the duly elected and qualified Nevada Secretary of State, do hereby certify that I am, by the laws of said State, the custodian of the records relating to filings by corporations, non-profit corporations, corporation soles, limited-liability companies, limited partnerships, limited-liability partnerships and business trusts pursuant to Title 7 of the Nevada Revised Statutes which are either presently in a status of good standing or were in good standing for a time period subsequent of 1976 and am the proper officer to execute this certificate.

I further certify, that the following is a list of all organizational documents on file in this office for

OPPORTUNITY 180

Articles of Incorporation filed on August 26, 2014.

Amended & Restated Articles of Incorporation filed on February 17, 2015.

STATE OF NEVADA

BARBARA K. CEGAVSKE
Secretary of State

OFFICE OF THE
SECRETARY OF STATE

JEFFERY LANDERFELT
Deputy Secretary
for Commercial Recordings

Certified Copy

February 17, 2015

Job Number: C20150217-0483
Reference Number: 20150070082-85
Expedite:
Through Date:

The undersigned filing officer hereby certifies that the attached copies are true and exact copies of all requested statements and related subsequent documentation filed with the Secretary of State's Office, Commercial Recordings Division listed on the attached report.

Document Number(s)	Description	Number of Pages
20140615140-34	Articles of Incorporation	2 Pages/1 Copies

Respectfully,

Barbara K. Cegavske

BARBARA K. CEGAVSKE
Secretary of State

Certified By: Angela Warwick
Certificate Number: C20150217-0483
You may verify this certificate
online at **http://www.nvsos.gov/**

Commercial Recording Division
202 N. Carson Street
Carson City, Nevada 89701-4201
Telephone (775) 684-5708
Fax (775) 684-7138

Attachment to

Articles of Incorporation of

Opportunity 180

Said organization is organized exclusively for charitable, religious, educational, and scientific purposes, including, for such purposes, the making of distributions to organizations that qualify as exempt organizations under the section 501 (c) (3) of the Internal Revenue Code, or corresponding section of any future federal tax code. The business activity for said organization is as follows: Opportunity 180 supports the academic achievement of all students through the recruitment and creation of new schools. We will recruit, support and create high quality new schools to serve pK-12th grade students.

No part of the net earnings of this organization shall inure to the benefit of, or be distributable to, its members, trustees, officers, or other private persons, except that the corporation shall be authorized and empowered to pay reasonable compensation for services rendered and to make payments and distributions in furtherance of the purposes set forth herein. No substantial part of the activities of this corporation shall be the carrying on of propaganda, or otherwise attempting to influence legislation, and this corporation shall not participate in, or intervene in (including the publishing or distribution of statements), any political campaign on behalf of or in opposition to any candidate for public office. Notwithstanding any other provision of this document, the corporation shall not carry on any other activities not permitted to be carried on (a) by a corporation exempt from federal income tax under section 501(c) (3) of the Internal Revenue Code, or the corresponding section of any future federal tax code, or (b) by a corporation, contributions to which are deductible under section 170(c) (2) of the Internal Revenue Code, or the corresponding section of any future federal tax code.

Upon the dissolution of this corporation, assets remaining shall be distributed for one or more exempt purposes within the meaning of Section 501(c) (3) of the Internal Revenue Code, or corresponding section of any future federal tax code, or shall be distributed to the federal government, or to a state or local government, for a public purpose. Any such assets not so disposed of shall be disposed by a Court of Competent Jurisdiction of the county in which the principal office of the organization is then located, exclusively for such purposes or to such organization or organizations, as said Court shall determine, which are organized and operated exclusively for such purposes.

SECRETARY OF STATE

STATE OF NEVADA

I further certify that the records of the Nevada Secretary of State, at the date of this certificate, evidence, **OPPORTUNITY 180**, as a non-profit corporation duly organized under the laws of Nevada and existing under and by virtue of the laws of the State of Nevada since August 26, 2014, and is in good standing in this state.

IN WITNESS WHEREOF, I have hereunto set my hand and affixed the Great Seal of State, at my office on February 17, 2015.

Barbara K. Cegavske

BARBARA K. CEGAVSKE
Secretary of State

Certified By: Angela Warwick
Certificate Number: C20150217-0483
You may verify this certificate online at **http://www.nvsos.gov/**



090503



BARBARA K. CEGAVSKE
Secretary of State
202 North Carson Street
Carson City, Nevada 89701-4201
(775) 684-5708
Website: www.nvsos.gov

Filed in the office of	Document Number
Barbara K. Cegavske	20150070080-63
Secretary of State	Filing Date and Time
State of Nevada	02/17/2015 9:26 AM
	Entity Number
	E0442862014-6

Certificate to Accompany Restated Articles or Amended and Restated Articles

(PURSUANT TO NRS)

USE BLACK INK ONLY - DO NOT HIGHLIGHT

ABOVE SPACE IS FOR OFFICE USE ONLY

This Form is to Accompany Restated Articles or Amended and Restated Articles of Incorporation

(Pursuant to NRS 78.403, 82.371, 86.221, 87A, 88.355 or 88A.250)

(This form is also to be used to accompany Restated Articles or Amended and Restated Articles for Limited-Liability Companies, Certificates of Limited Partnership, Limited-Liability Limited Partnerships and Business Trusts)

1. Name of Nevada entity as last recorded in this office:

OPPORTUNITY 180

2. The articles are: (mark only one box) ☐ Restated ☒ Amended and Restated

Please entitle your attached articles "Restated" or "Amended and Restated," accordingly.

3. Indicate what changes have been made by checking the appropriate box:*

☐ No amendments; articles are restated only and are signed by an officer of the corporation who has been authorized to execute the certificate by resolution of the board of directors adopted on: _____

The certificate correctly sets forth the text of the articles or certificate as amended to the date of the certificate.

☐ The entity name has been amended.

☐ The registered agent has been changed. (attach Certificate of Acceptance from new registered agent)

☒ The purpose of the entity has been amended.

☐ The authorized shares have been amended.

☐ The directors, managers or general partners have been amended.

☐ IRS tax language has been added.

☒ Articles have been added.

☐ Articles have been deleted.

☒ Other. The articles or certificate have been amended as follows: (provide article numbers, if available)

Article IV: defines prohibited activities
Article V: initial trustees
Article VI: removes personal liability from members, directors or officers (see attached non profit amendment)

4. Effective date and time of filing: (optional) Date: _____ Time: _____

(must not be later than 90 days after the certificate is filed)

* This form is to accompany Restated Articles or Amended and Restated Articles which contain newly altered or amended articles. The Restated Articles must contain all of the requirements as set forth in the statutes for amending or altering the articles for certificates.

IMPORTANT: Failure to include any of the above information and submit with the proper fees may cause this filing to be rejected.

This form must be accompanied by appropriate fees.

Nevada Secretary of State Restated Articles
Revised: 1-5-15

BARBARA K. CEGAVSKE
Secretary of State
202 North Carson Street
Carson City, Nevada 89701-4201
(775) 684-5708
Website: www.nvsos.gov
www.nvsilverflume.gov

Filed in the Office of	Business Number
Barbara K. Cegavske	**E0442862014-6**
Secretary of State	Filing Number
State Of Nevada	**20211705422**
	Filed On
	08/26/2021 09:36:55 AM
	Number of Pages
	1

Charitable Solicitation Registration Statement

(PURSUANT TO NRS CHAPTER 82)

Required for any corporation that intends to solicit charitable/tax deductible contributions. To be filed with Initial/Annual List Forms.

1. Names of Charitable Organization: (please complete items a thru c; attach additional page(s) if necessary)

a) Name of charitable organization as state in its Articles of Incorporation or other governing document:
Opportunity 180

b) Exact name of charitable organization as registered with the Internal Revenue Service:
Opportunity 180

c) Name or names under which charitable organization may, or intends to, solicit charitable contributions in Nevada:
OPPORTUNITY 180

2. Web Address: (optional*)

http://opportunity180.org *will be listed on public entity search

3. USA PATRIOT ACT certification: (optional)

☐ Check here to accept the following certification.

In compliance with the Uniting and Strengthening America by Providing Appropriate Tools Required to Intercept and Obstruct Terrorism (USA PATRIOT) Act of 2001 and other counterterrorism laws, I hereby certify on behalf of the herein named entity that all funds and donations will be used in compliance with all United States of America anti-terrorist financing and asset control laws, statutes and executive orders.

4. Places of Business: (please complete items a, b; attach additional page(s) if necessary)

a) Address and telephone number of the principal place of business of the charitable organization: **7028923940** (Telephone Number)

11035 Lavender Hill Dr., Suite 160-180	**Las Vegas**	**NV**	**89135**	**USA**
Address	City	State	Zip Code	Country

b) Address and telephone number of any office in this state OR if none, name, address and telephone number of custodian of its financial records:

Miles Dickson	**7028923940**
Name of Custodian	Telephone Number

11035 Lavender Hill Dr., Suite 160-180	**Las Vegas**	**NV**	**89135**	**USA**
Address	City	State	Zip Code	Country

5. Exempt Status and Federal Tax ID:

Federal tax exempt status: **1** EIN - Federal Tax ID: **61-1753910**

6. Names and Addresses of Executive Personnel: (attach additional page(s) if necessary)

Jana Wilcox Lavin	**EXECUTIVE PERSONNEL**			
Name	Title			
11035 Lavender Hill Dr., Suit 160-180	**Las Vegas**	**NV**	**89135**	**USA**
Address	City	State	Zip Code	Country

7. Fiscal Year:

Day and month of end of fiscal year of the charitable organization: Day **30** Month **6**

8. Financial Information from IRS Form 990, 990EZ or if no Form 990, a good faith estimate for most recent fiscal year:

☐ Check here if you file Form 990N or have not filed a Form 990 or 990EZ. If checked, please provide a good faith estimate for its current fiscal year. All others please provide the information from the most recently filed Form 990 , Part I or 990EZ, Parts I and II.

Total Revenue (line 12, Form 990; line 9, Form 990EZ)	**10324.0**
Total Expenses (line 18, Form 990; line 17, Form 990EZ)	**4869693.0**
Revenue less Expenses (line 19, Form 990; line 18, Form 990EZ)	**-4859369.0**
Total Assets (line 20, Form 990; line 25, Form 990EZ)	**5468462.0**
Total Liabilities (line 21, Form 990; line 26, Form 990EZ)	**2001007.0**
Net Assets or Fund Balances (line 22, Form 990; line 27, Form 990EZ)	**3467385.0**

9. Signature: (must be signed by an officer, or if a trust, by a trustee)

I declare, to the best of my knowledge under penalty of perjury, that the information contained herein is correct and acknowledge that pursuant to NRS 239.330, it is a category C felony to knowingly offer any false or forged instrument for filing in the Office of the Secretary of State.

X Harry Paul Marquis	**Attorney**	**08/26/2021**
Authorized Signature	Title	Date

Bylaws
of
OPPORTUNITY 180

ARTICLE I

Name & Purpose

Section 1.1 Name

The name of the organization shall be **Opportunity 180.** It shall be a nonprofit organization incorporated under the laws of the State of Nevada.

Section 1.2 Purpose

Opportunity 180 is organized exclusively for charitable and educational purposes within the meaning of section 501(c)(3) of the Internal Revenue Code, as amended (the "Code") and to such end the Corporation is organized and shall be operated as a charity for the following purposes:

(i) to recruit and support high quality public charter schools to provide children in Southern Nevada with an excellent education;

(ii) to support local education entrepreneurs wishing to create high quality public charter schools;

(iii) to use its assets and resources to carry out its charitable and educational purpose, including but not limited to, supporting high quality charter school creation and growth in Nevada;

(iv) to accept and receive, from whatever source, and to administer grants whether unrestricted or for specific purposes, of funds and property, of every kind and description;

(v) to do all things incidental to the foregoing.

ARTICLE 2

Trustees

Section 2.1 Number

The Board of Trustees of the Corporation (the "Board of Trustees") shall consist of no less than 5 individuals.

Section 2.2 Duties

The Board of Trustees, subject to limitations contained in the Nevada Revised Statutes, the Articles of Incorporation of the Corporation, and this Code of Regulations:

a. Perform any and all duties imposed on them collectively or individually by law, by the articles of the incorporations, or by these bylaws;

b. Appoint, remove, employ and discharge, and except as otherwise provided by these bylaws, prescribe the duties and fix compensation, if any, of all officers, agents, and employees of the corporation;

c. Supervise all officers, agents, and employees of the corporation to assure their duties are performed properly;

d. Meet at such times and places as required by these bylaws

e. Register their addresses with the secretary of the corporation, and notices of meetings mailed to them at such addresses shall be valid notices thereof.

Section 2.3 Status as Members

The Trustees of the Corporation shall be the members of the Corporation and shall, for the purposes of any statutes or rule of law relating to the corporations be taken to be the members of the Corporation.

Section 2.4 Election and Term of Office

The members of the initial Board of Trustees shall be the initial Trustees of the Corporation identified in Article V of the Articles of the Incorporation of the Corporations. Subject to the provisions of Sections 2.5 and 2.6 of these By Laws, members of the initial Board of Trustees shall serve as Trustees until December 31, 2015 or until their successors are elected or qualified. Thereafter, each Trustee shall serve a term of one year, two years or three years, or until his or her successor is duly elected or qualified.

Trustees shall be elected at the annual meeting of the Corporation held at the time within the year of the expiration of the terms of the members of the Board of Trustees.
A Trustee may be elected to a consecutive term on the Board of Trustees without limitation on the number of such consecutive terms.

Section 2.5 Resignation

Any Trustee may resign by submitting a written resignation at a meeting of the Board of

Trustees or by mailing such resignation to the Corporation at its principal office, and, thereupon, such resignation shall become effective forthwith without need of any acceptance, unless otherwise specified therein.

Section 2.6 Removal of Trustees

At any annual or special meeting of the Trustees duly called for that purpose, any Trustee may be removed with or without cause by a majority vote of the other Trustees. Written notice that an individual is being considered for removal shall be given to the Board of Trustees at least seven (7) days prior to the date of the meeting at which the name of such individual is to be presented for removal. A successor Trustee may thereupon be appointed to fill the vacancy thus created, but only in accordance with the procedure set forth in Section 2.7 below. Any Trustee whose removal has been proposed shall be given an opportunity to be heard at the meeting at which his or her removal is considered.

Section 2.7 Vacancies

Vacancies on the board of directors shall exist (1) on the death, resignation, or removal of any director, and (2) whenever the number of authorized directors is increased.

Any director may resign effective upon giving written notice to the chairperson of the board, the president, the secretary, or the board of directors, unless the notice specifies a later time for the effectiveness of such resignation. No director may resign if the corporation would then be left without a duly elected director or directors in charge of its affairs, except upon notice to the office of the attorney general or other appropriate agency of this state.

Directors may be removed from office, with or without cause, as permitted by and in accordance with the laws of this state.

Unless otherwise prohibited by the articles of incorporation, these bylaws, or provisions of law, vacancies on the board may be filled by approval of the board of directors. If the number of directors then in office is less than a quorum, a vacancy on the board may be filled by approval of a majority of the directors then in office or by a sole remaining director. A person elected to fill a vacancy on the board shall hold office until the next election of the board of directors or until his or her death, resignation, or removal from office.

Section 2.8 Compensation

Trustees shall not be compensated for services provided to the Corporation in their capacity as trustees. Trustees may be compensated for the reasonable value of any other services authorized by and provided to the Corporation. Trustees may be reimbursed, upon Trustee approval, for actual expenses incurred by them in the performance of their duties when such expenses are appropriately documented by receipts or other evidence of payment.

[1]Section 2.9 Regular Meetings

Except as otherwise provided by law, a meeting of the Board of Trustees for the purpose of the election of officers, and the consideration of any other business that may be properly brought before the Board of Trustees shall be held at minimum, four times a year at such time and place as the Board of Trustees may from time to time designate.

Section 2.10 Special Meetings

Special meetings of the Board of Trustees may be called, and upon the written request of at least two (2) Trustees, shall be called by the President of the Corporation.

Section 2.11 Notice of Annual and Special Meetings

Notice of annual, regular and special meetings shall be given to each Trustee personally or by mail, telephone, facsimile or text at least three (3) days prior to the date designated for such meeting. Such notice shall state the time, place and purpose of the meeting subject thereto.

Section 2.12 Waiver of Notice

Before or at any meeting of the Board of Trustees, any Trustee may, in writing, waive notice of such meeting and such waiver shall be deemed equivalent to the giving of such notice. Attendance by a Trustee at any meeting of the Board of Trustees shall be a waiver of notice by such Trustee of the time and place thereof.

Section 2.13 Action by Written Consent

To the extent permitted by law, any lawful action of the Board of Trustees may be taken without a meeting, if written consent to such action is signed by all the Trustees and filed with the minutes of the Board of Trustees.

Section 2.14 Telephone Meetings

Meetings of the Board of Trustees may be held through any communications equipment if all persons participating can hear each other. Participation in a meeting pursuant to this Section 2.14 shall constitute presence at such meeting.

[1] Section 2.9 was revised at the 08/25/2015 Board meeting. The requirement that the Board of Directors meet monthly was revised to require that the Board meet at least four times per year.

Section 2.15 Quorum

Except as otherwise provided by law, at all meetings of the Board of Trustees a minimum of three (3) members of the Board of Trustees is necessary to constitute a quorum for the transaction of business. At a meeting at which a quorum is present, the acts of a majority of the Trustees present shall constitute the acts of the Board of Trustees. Each Trustee shall have one vote.

Section 2.14 Majority Action as Board Action

Every act or decision done or made by a majority of the directors present at a meeting duly held at which a quorum is present is the act of the board of directors, unless the articles of incorporation, these bylaws, or provisions of law require a greater percentage or different voting rules for approval of a matter by the board.

Section 2.15 Conduct of Meetings

Meetings of the board of directors shall be presided over by the chairperson of the board, or, if no such person has been so designated, or in his or her absence, the president of the corporation, or in his or her absence, by the vice president of the corporation, or in the absence of each of these persons, by a chairperson chosen by a majority of the directors present at the meeting. The secretary of the corporation shall act as secretary of all meetings of the board, provided that, in his or her absence, the presiding officer shall appoint another person to act as secretary of the meeting.

Meetings shall be governed by Roberts Rules of Order, insofar as such rules are not inconsistent with or in conflict with the articles of incorporation, these bylaws, or with provisions of law.

Section 2.16 Nonliability of Directors

The directors shall not be personally liable for the debts, liabilities, or other obligations of the corporation.

Section 2.17 Indemnification by Corporation of Directors and Officers

The directors and officers of the corporation shall be indemnified by the corporation to the fullest extent permissible under the laws of this state.

Section 2.18 Insurance for Corporate Agents

Except as may be otherwise provided under provisions of law, the board of directors may adopt a resolution authorizing the purchase and maintenance of insurance on behalf of any agent of the corporation (including a director, officer, employee, or other agent of the corporation)

against liabilities asserted against or incurred by the agent in such capacity or arising out of the agent's status as such, whether or not the corporation would have the power to indemnify the agent against such liability under the articles of incorporation, these bylaws, or provisions of law.

ARTICLE 3

Officers

Section 3.1 Designation

The officers of the corporation shall be a president, a vice president, a secretary, and a treasurer. The corporation may also have a chairperson of the board, one or more vice presidents, assistant secretaries, assistant treasurers, and other such officers with such titles as may be determined from time to time by the board of directors.

Section 3.2 Election of Officers

Officers shall be elected by the board of directors, at any time, and each officer shall hold office until he or she resigns or is removed or is otherwise disqualified to serve, or until his or her successor shall be elected and qualified, whichever occurs first.

Section 3.3 Removal and Resignation

Any officer may be removed, either with or without cause, by the board of directors, at any time. Any officer may resign at any time by giving written notice to the board of directors or to the president or secretary of the corporation. Any such resignation shall take effect at the date of receipt of such notice or at any later date specified therein, and, unless otherwise specified therein, the acceptance of such resignation shall not be necessary to make it effective. The above provisions of this section shall be superseded by any conflicting terms of a contract which has been approved or ratified by the board of directors relating to the employment of any officer of the corporation.

Section 3.4 Vacancies

Any vacancy caused by the death, resignation, removal, disqualification, or otherwise, of any officer shall be filled by the board of directors. In the event of a vacancy in any office other than that of president, such vacancy may be filled temporarily by appointment by the president until such time as the board shall fill the vacancy. Vacancies occurring in offices of officers appointed at the discretion of the board may or may not be filled as the board shall determine.

Section 3.4 Compensation

The salaries of the officers, if any, shall be fixed from time to time by resolution of the board of directors. In all cases, any salaries received by officers of this corporation shall be reasonable and given in return for services actually rendered to or for the corporation. All officer salaries shall be approved in advance in accordance with this corporation's conflict of interest policy, as set forth in Article 8 of these bylaws.

Section 3.5 President

The president shall be the chief executive officer of the corporation and shall, subject to the control of the board of directors, supervise and control the affairs of the corporation and the activities of the officers. He or she shall perform all duties incident to his or her office and such other duties as may be required by law, by the articles of incorporation, or by these bylaws, or which may be prescribed from time to time by the board of directors. Unless another person is specifically appointed as chairperson of the board of directors, the president shall preside at all meetings of the board of directors and, if this corporation has members, at all meetings of the members. Except as otherwise expressly provided by law, by the articles of incorporation, or by these bylaws, he or she shall, in the name of the corporation, execute such deeds, mortgages, bonds, contracts, checks, or other instruments which may from time to time be authorized by the board of directors.

Section 3.6 Secretary

The secretary shall:

Certify and keep at the principal office of the corporation the original, or a copy, of these bylaws as amended or otherwise altered to date.

Keep at the principal office of the corporation or at such other place as the board may determine, a book of minutes of all meetings of the directors, and, if applicable, meetings of committees of directors and of members, recording therein the time and place of holding, whether regular or special, how called, how notice thereof was given, the names of those present or represented at the meeting, and the proceedings thereof.

Ensure that the minutes of meetings of the corporation, any written consents approving action taken without a meeting, and any supporting documents pertaining to meetings, minutes, and consents shall be contemporaneously recorded in the corporate records of this corporation. "Contemporaneously" in this context means that the minutes, consents, and supporting documents shall be recorded in the records of this corporation by the later of (1) the next meeting of the board, committee, membership, or other body for which the minutes, consents, or supporting documents are being recorded, or (2) sixty (60) days after the date of the meeting or written consent.

See that all notices are duly given in accordance with the provisions of these bylaws or as required by law.

Be custodian of the records and of the seal of the corporation and affix the seal, as authorized by law or the provisions of these bylaws, to duly executed documents of the corporation.
Keep at the principal office of the corporation a membership book containing the name and address of each and any members, and, in the case where any membership has been terminated, he or she shall record such fact in the membership book together with the date on which such membership ceased.

Exhibit at all reasonable times to any director of the corporation, or to his or her agent or attorney, on request therefor, the bylaws, the membership book, and the minutes of the proceedings of the directors of the corporation.

In general, perform all duties incident to the office of secretary and such other duties as may be required by law, by the articles of incorporation, or by these bylaws, or which may be assigned to him or her from time to time by the board of directors.

Section 3.7 Treasurer

The treasurer shall:

Have charge and custody of, and be responsible for, all funds and securities of the corporation, and deposit all such funds in the name of the corporation in such banks, trust companies, or other depositories as shall be selected by the board of directors.

Receive, and give receipt for, monies due and payable to the corporation from any source whatsoever.

Disburse, or cause to be disbursed, the funds of the corporation as may be directed by the board of directors, taking proper vouchers for such disbursements.

Keep and maintain adequate and correct accounts of the corporation's properties and business transactions, including accounts of its assets, liabilities, receipts, disbursements, gains, and losses.

Exhibit at all reasonable times the books of account and financial records to any director of the corporation, or to his or her agent or attorney, on request therefor.

Render to the president and directors, whenever requested, an account of any or all of his or her transactions as treasurer and of the financial condition of the corporation.

Prepare, or cause to be prepared, and certify, or cause to be certified, the financial statements to be included in any required reports.

In general, perform all duties incident to the office of treasurer and such other duties as may be required by law, by the articles of incorporation of the corporation, or by these bylaws, or

which may be assigned to him or her from time to time by the board of directors.

ARTICLE 4

Committees

Section 4.1 Appointment

The President or the Board of Trustees may from time to time appoint committees. Members of committees need not be trustees.

Section 4.2 Meetings and Action

Meetings and action of committees shall be governed by, noticed, held, and taken in accordance with the provisions of these bylaws concerning meetings of the board of directors, with such changes in the context of such bylaw provisions as are necessary to substitute the committee and its members for the board of directors and its members, except that the time for regular and special meetings of committees may be fixed by resolution of the board of directors or by the committee. The board of directors may also adopt rules and regulations pertaining to the conduct of meetings of committees to the extent that such rules and regulations are not inconsistent with the provisions of these bylaws.

Section 4.3 Vacancies

Vacancies in the membership of any committee may be filled at any time by the President or by the Board of Trustees.

ARTICLE 5

Execution of Instruments, Deposits, and Funds

Section 5.1 Execution of Instruments

The board of directors, except as otherwise provided in these bylaws, may by resolution authorize any officer or agent of the corporation to enter into any contract or execute and deliver any instrument in the name of and on behalf of the corporation, and such authority may be general or confined to specific instances. Unless so authorized, no officer, agent, or employee shall have any power or authority to bind the corporation by any contract or engagement or to pledge its credit or to render it liable monetarily for any purpose or in any amount.

Section 5.2 Checks and Notes

Except as otherwise specifically determined by resolution of the board of directors, or as otherwise required by law, checks, drafts, promissory notes, orders for the payment of money, and other evidence of indebtedness of the corporation shall be signed by the treasurer and countersigned by the president of the corporation.

Section 5.3 Deposits

All funds of the corporation shall be deposited from time to time to the credit of the corporation in such banks, trust companies, or other depositories as the board of directors may select.

Section 5.4 Gifts

The board of directors may accept on behalf of the corporation any contribution, gift, bequest, or devise for the nonprofit purposes of this corporation.

ARTICLE 6

Corporate Records and Reports

Section 6.1 Maintenance of Corporate Records

The corporation shall keep at its principal office:

a. Minutes of all meetings of directors, committees of the board, and, if this corporation has members, of all meetings of members, indicating the time and place of holding such meetings, whether regular or special, how called, the notice given, and the names of those present and the proceedings thereof;

b. Adequate and correct books and records of account, including accounts of its properties and business transactions and accounts of its assets, liabilities, receipts, disbursements, gains, and losses;

c. A record of its members, if any, indicating their names and addresses and, if applicable, the class of membership held by each member and the termination date of any membership;

d. A copy of the corporation's articles of incorporation and bylaws as amended to date, which shall be open to inspection by the members, if any, of the corporation at all

reasonable times during office hours.

Section 6.2 Directors' Inspection Rights

Every director shall have the absolute right at any reasonable time to inspect and copy all books, records, and documents of every kind and to inspect the physical properties of the corporation, and shall have such other rights to inspect the books, records, and properties of this corporation as may be required under the articles of incorporation, other provisions of these bylaws, and provisions of law.

Section 6.3 Right to Copy and Make Extracts

Any inspection under the provisions of this article may be made in person or by agent or attorney and the right to inspection shall include the right to copy and make extracts.

Section 6.4 Periodic Report

The board shall cause any annual or periodic report required under law to be prepared and delivered to an office of this state or to the members, if any, of this corporation, to be so prepared and delivered within the time limits set by law.

ARTICLE 7

IRC 501(c)(3) Tax Exemption Provisions

Section 7.1 Limitations on Activities

No substantial part of the activities of this corporation shall be the carrying on of propaganda, or otherwise attempting to influence legislation (except as otherwise provided by Section 501(h) of the Internal Revenue Code), and this corporation shall not participate in, or intervene in (including the publishing or distribution of statements), any political campaign on behalf of, or in opposition to, any candidate for public office.
Notwithstanding any other provisions of these bylaws, this corporation shall not carry on any activities not permitted to be carried on (a) by a corporation exempt from federal income tax under Section 501(c)(3) of the Internal Revenue Code, or (b) by a corporation, contributions to which are deductible under Section 170(c)(2) of the Internal Revenue Code.

Section 7.2 Prohibition Against Private Inurement

No part of the net earnings of this corporation shall inure to the benefit of, or be distributable to, its members, directors or trustees, officers, or other private persons, except that the

corporation shall be authorized and empowered to pay reasonable compensation for services rendered and to make payments and distributions in furtherance of the purposes of this corporation.

Section 7.3 Distribution of Assets

Upon the dissolution of this corporation, its assets remaining after payment, or provision for payment, of all debts and liabilities of this corporation, shall be distributed for one or more exempt purposes within the meaning of Section 501(c)(3) of the Internal Revenue Code or shall be distributed to the federal government, or to a state or local government, for a public purpose. Such distribution shall be made in accordance with all applicable provisions of the laws of this state.

Section 7.4 Private Foundation Requirements and Restrictions

In any taxable year in which this corporation is a private foundation as described in Section 509(a) of the Internal Revenue Code, the corporation 1) shall distribute its income for said period at such time and manner as not to subject it to tax under Section 4942 of the Internal Revenue Code; 2) shall not engage in any act of self-dealing as defined in Section 4941(d) of the Internal Revenue Code; 3) shall not retain any excess business holdings as defined in Section 4943(c) of the Internal Revenue Code; 4) shall not make any investments in such manner as to subject the corporation to tax under Section 4944 of the Internal Revenue Code; and 5) shall not make any taxable expenditures as defined in Section 4945(d) of the Internal Revenue Code.

ARTICLE 8

Conflict of Interest and Compensation Approval Policies

Section 8.1 Purpose of Conflict of Interest Policy

The purpose of this conflict of interest policy is to protect this tax-exempt corporation's interest when it is contemplating entering into a transaction or arrangement that might benefit the private interest of an officer or director of the corporation or any "disqualified person" as defined in Section 4958(f)(1) of the Internal Revenue Code and as amplified by Section 53.4958-3 of the IRS Regulations and which might result in a possible "excess benefit transaction" as defined in Section 4958(c)(1)(A) of the Internal Revenue Code and as amplified by Section 53.4958 of the IRS Regulations. This policy is intended to supplement but not replace any applicable state and federal laws governing conflict of interest applicable to nonprofit and charitable organizations.

Section 8.2 Definitions

a. Interested Person. Any director, principal officer, member of a committee with governing board delegated powers, or any other person who is a "disqualified person" as defined in Section 4958(f)(1) of the Internal Revenue Code and as amplified by Section 53.4958-3 of the IRS Regulations, who has a direct or indirect financial interest, as defined below, is an interested person.

b. Financial Interest. A person has a financial interest if the person has, directly or indirectly, through business, investment, or family:

1. An ownership or investment interest in any entity with which the corporation has a transaction or arrangement;

2. A compensation arrangement with the corporation or with any entity or individual with which the corporation has a transaction or arrangement; or

3. A potential ownership or investment interest in, or compensation arrangement with, any entity or individual with which the corporation is negotiating a transaction or arrangement.

Compensation includes direct and indirect remuneration as well as gifts or favors that are not insubstantial.

A financial interest is not necessarily a conflict of interest. Under Section 8.3, paragraph B, a person who has a financial interest may have a conflict of interest only if the appropriate governing board or committee decides that a conflict of interest exists.

Section 8.3 Conflict of Interest Avoidance Procedures

a. Duty to Disclose. In connection with any actual or possible conflict of interest, an interested person must disclose the existence of the financial interest and be given the opportunity to disclose all material facts to the directors and members of committees with governing board delegated powers considering the proposed transaction or arrangement.

b. Determining Whether a Conflict of Interest Exists. After disclosure of the financial interest and all material facts, and after any discussion with the interested person, he/she shall leave the governing board or committee meeting while the determination of a conflict of interest is discussed and voted upon. The remaining board or committee members shall decide if a conflict of interest exists.

c. Procedures for Addressing the Conflict of Interest. An interested person may make a presentation at the governing board or committee meeting, but after the presentation, he/she

shall leave the meeting during the discussion of, and the vote on, the transaction or arrangement involving the possible conflict of interest.

The chairperson of the governing board or committee shall, if appropriate, appoint a disinterested person or committee to investigate alternatives to the proposed transaction or arrangement.

After exercising due diligence, the governing board or committee shall determine whether the corporation can obtain with reasonable efforts a more advantageous transaction or arrangement from a person or entity that would not give rise to a conflict of interest.

If a more advantageous transaction or arrangement is not reasonably possible under circumstances not producing a conflict of interest, the governing board or committee shall determine by a majority vote of the disinterested directors whether the transaction or arrangement is in the corporation's best interest, for its own benefit, and whether it is fair and reasonable. In conformity with the above determination, it shall make its decision as to whether to enter into the transaction or arrangement.

d. Violations of the Conflicts of Interest Policy. If the governing board or committee has reasonable cause to believe a member has failed to disclose actual or possible conflicts of interest, it shall inform the member of the basis for such belief and afford the member an opportunity to explain the alleged failure to disclose.

If, after hearing the member's response and after making further investigation as warranted by the circumstances, the governing board or committee determines the member has failed to disclose an actual or possible conflict of interest, it shall take appropriate disciplinary and corrective action.

Section 8.4 Records of Board and Board Committee Proceedings

The minutes of meetings of the governing board and all committees with board delegated powers shall contain:

a. The names of the persons who disclosed or otherwise were found to have a financial interest in connection with an actual or possible conflict of interest, the nature of the financial interest, any action taken to determine whether a conflict of interest was present, and the governing board's or committee's decision as to whether a conflict of interest in fact existed.

b. The names of the persons who were present for discussions and votes relating to the transaction or arrangement, the content of the discussion, including any alternatives to the proposed transaction or arrangement, and a record of any votes taken in connection with the proceedings.

Section 8.5 Compensation Approval Policies

A voting member of the governing board who receives compensation, directly or indirectly, from the corporation for services is precluded from voting on matters pertaining to that member's compensation.

A voting member of any committee whose jurisdiction includes compensation matters and who receives compensation, directly or indirectly, from the corporation for services is precluded from voting on matters pertaining to that member's compensation.

No voting member of the governing board or any committee whose jurisdiction includes compensation matters and who receives compensation, directly or indirectly, from the corporation, either individually or collectively, is prohibited from providing information to any committee regarding compensation.

When approving compensation for directors, officers and employees, contractors, and any other compensation contract or arrangement, in addition to complying with the conflict of interest requirements and policies contained in the preceding and following sections of this article as well as the preceding paragraphs of this section of this article, the board or a duly constituted compensation committee of the board shall also comply with the following additional requirements and procedures:

a. the terms of compensation shall be approved by the board or compensation committee prior to the first payment of compensation;

b. all members of the board or compensation committee who approve compensation arrangements must not have a conflict of interest with respect to the compensation arrangement as specified in IRS Regulation Section 53.4958-6(c)(iii), which generally requires that each board member or committee member approving a compensation arrangement between this organization and a "disqualified person" (as defined in Section 4958(f)(1) of the Internal Revenue Code and as amplified by Section 53.4958-3 of the IRS Regulations):

1. is not the person who is the subject of the compensation arrangement, or a family member of such person;

2. is not in an employment relationship subject to the direction or control of the person who is the subject of the compensation arrangement;

3. does not receive compensation or other payments subject to approval by the person who is the subject of the compensation arrangement;

4. has no material financial interest affected by the compensation arrangement; and

5. does not approve a transaction providing economic benefits to the person who is the subject of the compensation arrangement, who in turn has approved or will approve a transaction providing benefits to the board or committee member.

c. the board or compensation committee shall obtain and rely upon appropriate data as to comparability prior to approving the terms of compensation. Appropriate data may include, but are not limited to the following:

1. compensation levels paid by similarly situated organizations, both taxable and tax-exempt, for functionally comparable positions. "Similarly situated" organizations are those of a similar size, purpose, and with similar resources;

2. the availability of similar services in the geographic area of this organization;

3. current compensation surveys compiled by independent firms;

4. actual written offers from similar institutions competing for the services of the person who is the subject of the compensation arrangement;

As allowed by IRS Regulation 4958-6, if this organization has average annual gross receipts (including contributions) for its three prior tax years of less than $1 million, the board or compensation committee will have obtained and relied upon appropriate data as to comparability if it obtains and relies upon data on compensation paid by three comparable organizations in the same or similar communities for similar services.

d. the terms of compensation and the basis for approving them shall be recorded in written minutes of the meeting of the board or compensation committee that approved the compensation. Such documentation shall include:

1. the terms of the compensation arrangement and the date it was approved;

2. the members of the board or compensation committee who were present during debate on the transaction, those who voted on it, and the votes cast by each board or committee member;

3. the comparability data obtained and relied upon and how the data was obtained;

4. If the board or compensation committee determines that reasonable compensation for a specific position in this organization or for providing services under any other compensation arrangement with this organization is higher or lower than the range of comparability data obtained, the board or committee

shall record in the minutes of the meeting the basis for its determination;

5. If the board or committee makes adjustments to comparability data due to geographic area or other specific conditions, these adjustments and the reasons for them shall be recorded in the minutes of the board or committee meeting;

6. any actions taken with respect to determining if a board or committee member had a conflict of interest with respect to the compensation arrangement, and if so, actions taken to make sure the member with the conflict of interest did not affect or participate in the approval of the transaction (for example, a notation in the records that after a finding of conflict of interest by a member, the member with the conflict of interest was asked to, and did, leave the meeting prior to a discussion of the compensation arrangement and a taking of the votes to approve the arrangement);

7. The minutes of board or committee meetings at which compensation arrangements are approved must be prepared before the later of the date of the next board or committee meeting or 60 days after the final actions of the board or committee are taken with respect to the approval of the compensation arrangements. The minutes must be reviewed and approved by the board and committee as reasonable, accurate, and complete within a reasonable period thereafter, normally prior to or at the next board or committee meeting following final action on the arrangement by the board or committee.

Section 8.6 Annual Statements

Each director, principal officer, and member of a committee with governing board delegated powers shall annually sign a statement which affirms such person:

a. has received a copy of the conflicts of interest policy;

b. has read and understands the policy;

c. has agreed to comply with the policy; and

d. understands the corporation is charitable and in order to maintain its federal tax exemption it must engage primarily in activities which accomplish one or more of its tax-exempt purposes.

Section 8.7 Periodic Reviews

To ensure the corporation operates in a manner consistent with charitable purposes and does not engage in activities that could jeopardize its tax-exempt status, periodic reviews shall be

conducted. The periodic reviews shall, at a minimum, include the following subjects:

a. Whether compensation arrangements and benefits are reasonable, based on competent survey information, and the result of arm's-length bargaining.

b. Whether partnerships, joint ventures, and arrangements with management organizations conform to the corporation's written policies, are properly recorded, reflect reasonable investment or payments for goods and services, further charitable purposes, and do not result in inurement, impermissible private benefit, or in an excess benefit transaction.

Section 8.8 Use of Outside Experts

When conducting the periodic reviews as provided for in Section 8.7, the corporation may, but need not, use outside advisors. If outside experts are used, their use shall not relieve the governing board of its responsibility for ensuring periodic reviews are conducted.

ARTICLE 9

Amendment of Bylaws

Section 9.1 Amendment

Subject to the power of the members, if any, of this corporation to adopt, amend, or repeal the bylaws of this corporation and except as may otherwise be specified under provisions of law, these bylaws, or any of them, may be altered, amended, or repealed and new bylaws adopted by approval of the board of directors.

ARTICLE 10

Construction and Terms

If there is any conflict between the provisions of these bylaws and the articles of incorporation of this corporation, the provisions of the articles of incorporation shall govern.

Should any of the provisions or portions of these bylaws be held unenforceable or invalid for any reason, the remaining provisions and portions of these bylaws shall be unaffected by such holding.

All references in these bylaws to the articles of incorporation shall be to the articles of incorporation, articles of organization, certificate of incorporation, organizational charter, corporate charter, or other founding document of this corporation filed with an office of this state and used to establish the legal existence of this corporation.

All references in these bylaws to a section or sections of the Internal Revenue Code shall be to such sections of the Internal Revenue Code of 1986 as amended from time to time, or to corresponding provisions of any future federal tax code.

INTERNAL REVENUE SERVICE
P. O. BOX 2508
CINCINNATI, OH 45201

DEPARTMENT OF THE TREASURY

Date: MAR 12 2015

OPPORTUNITY 180
C/O ALLISON SERAFIN
11035 LAVENDER HILL DR STE 160-180
LAS VEGAS, NV 89135-2903

Employer Identification Number:
61-1753910
DLN:
17053055360015
Contact Person:
JOAN C KISER ID# 31217
Contact Telephone Number:
(877) 829-5500
Accounting Period Ending:
December 31
Public Charity Status:
170(b)(1)(A)(vi)
Form 990 Required:
Yes
Effective Date of Exemption:
August 26, 2014
Contribution Deductibility:
Yes
Addendum Applies:
No

Dear Applicant:

We are pleased to inform you that upon review of your application for tax exempt status we have determined that you are exempt from Federal income tax under section 501(c)(3) of the Internal Revenue Code. Contributions to you are deductible under section 170 of the Code. You are also qualified to receive tax deductible bequests, devises, transfers or gifts under section 2055, 2106 or 2522 of the Code. Because this letter could help resolve any questions regarding your exempt status, you should keep it in your permanent records.

Organizations exempt under section 501(c)(3) of the Code are further classified as either public charities or private foundations. We determined that you are a public charity under the Code section(s) listed in the heading of this letter.

For important information about your responsibilities as a tax-exempt organization, go to www.irs.gov/charities. Enter "4221-PC" in the search bar to view Publication 4221-PC, Compliance Guide for 501(c)(3) Public Charities, which describes your recordkeeping, reporting, and disclosure requirements.

Sincerely,

Director, Exempt Organizations

Letter 947

Form **990**

Department of the Treasury
Internal Revenue Service

Return of Organization Exempt From Income Tax

Under section 501(c), 527, or 4947(a)(1) of the Internal Revenue Code (except private foundations)

► Do not enter social security numbers on this form as it may be made public.
► Go to *www.irs.gov/Form990* for instructions and the latest information.

OMB No. 1545-0047

2018

Open to Public Inspection

A For the 2018 calendar year, or tax year beginning , 2018, and ending ,

B Check if applicable:
- ☐ Address change
- ☐ Name change
- ☐ Initial return
- ☐ Final return/terminated
- ☐ Amended return
- ☐ Application pending

C
OPPORTUNITY 180
11035 LAVENDER HILL DR STE 160-180
LAS VEGAS, NV 89135-2955

D Employer identification number: 61-1753910

E Telephone number: (702) 776-6086

G Gross receipts $ 9,650,989.

F Name and address of principal officer: JANA WILCOX LAVIN
SAME AS C ABOVE

H(a) Is this a group return for subordinates? ☐ Yes ☒ No

H(b) Are all subordinates included? If "No," attach a list. (see instructions) ☐ Yes ☐ No

I Tax-exempt status: ☒ 501(c)(3) ☐ 501(c) ( )◄ (insert no.) ☐ 4947(a)(1) or ☐ 527

J Website: ► OPPORTUNITY180.ORG

H(c) Group exemption number ►

K Form of organization: ☒ Corporation ☐ Trust ☐ Association ☐ Other ► **L** Year of formation: 2014 **M** State of legal domicile: NV

Part I Summary

Activities & Governance

1 Briefly describe the organization's mission or most significant activities: SEE SCHEDULE O

2 Check this box ► ☐ if the organization discontinued its operations or disposed of more than 25% of its net assets.

3	Number of voting members of the governing body (Part VI, line 1a)	3	3
4	Number of independent voting members of the governing body (Part VI, line 1b)	4	3
5	Total number of individuals employed in calendar year 2018 (Part V, line 2a)	5	6
6	Total number of volunteers (estimate if necessary)	6	0
7a	Total unrelated business revenue from Part VIII, column (C), line 12	7a	0.
b	Net unrelated business taxable income from Form 990-T, line 38	7b	0.

Revenue

		Prior Year	Current Year
8	Contributions and grants (Part VIII, line 1h)	236,654.	9,650,989.
9	Program service revenue (Part VIII, line 2g)		
10	Investment income (Part VIII, column (A), lines 3, 4, and 7d)		
11	Other revenue (Part VIII, column (A), lines 5, 6d, 8c, 9c, 10c, and 11e)		
12	Total revenue – add lines 8 through 11 (must equal Part VIII, column (A), line 12)	236,654.	9,650,989.

Expenses

13	Grants and similar amounts paid (Part IX, column (A), lines 1-3)	1,289,636.	92,835.
14	Benefits paid to or for members (Part IX, column (A), line 4)		
15	Salaries, other compensation, employee benefits (Part IX, column (A), lines 5-10)	470,909.	484,061.
16a	Professional fundraising fees (Part IX, column (A), line 11e)		
b	Total fundraising expenses (Part IX, column (D), line 25) ► 115,695.		
17	Other expenses (Part IX, column (A), lines 11a-11d, 11f-24e)	2,210,856.	1,159,381.
18	Total expenses. Add lines 13-17 (must equal Part IX, column (A), line 25)	3,971,401.	1,736,277.
19	Revenue less expenses. Subtract line 18 from line 12	-3,734,747.	7,914,712.

Net Assets or Fund Balances

		Beginning of Current Year	End of Year
20	Total assets (Part X, line 16)	3,962,198.	11,908,164.
21	Total liabilities (Part X, line 26)	22,516.	53,770.
22	Net assets or fund balances. Subtract line 21 from line 20	3,939,682.	11,854,394.

Part II Signature Block

Under penalties of perjury, I declare that I have examined this return, including accompanying schedules and statements, and to the best of my knowledge and belief, it is true, correct, and complete. Declaration of preparer (other than officer) is based on all information of which preparer has any knowledge.

Sign Here

▶ Signature of officer — Date

▶ JANA WILCOX LAVIN — EXECUTIVE DIRECTOR
Type or print name and title

Paid Preparer Use Only

Print/Type preparer's name	Preparer's signature	Date	Check ☐ if self-employed	PTIN
BRADLEY K. WALLACE	BRADLEY K. WALLACE			P01339113

Firm's name ► WALLACE NEUMANN & VERVILLE, LLP
Firm's address ► 8930 SPANISH RIDGE AVE
LAS VEGAS, NV 89148-1302
Firm's EIN ► 26-3916060
Phone no. (702) 387-0999

May the IRS discuss this return with the preparer shown above? (see instructions) ☒ Yes ☐ No

BAA For Paperwork Reduction Act Notice, see the separate instructions. TEEA0101L 08/20/18 Form **990** (2018)

Part III Statement of Program Service Accomplishments

Check if Schedule O contains a response or note to any line in this Part III X

1 Briefly describe the organization's mission:

SEE SCHEDULE O

2 Did the organization undertake any significant program services during the year which were not listed on the prior Form 990 or 990-EZ? ..... ☐ Yes ☒ No

If "Yes," describe these new services on Schedule O.

3 Did the organization cease conducting, or make significant changes in how it conducts, any program services? .... ☐ Yes ☒ No

If "Yes," describe these changes on Schedule O.

4 Describe the organization's program service accomplishments for each of its three largest program services, as measured by expenses. Section 501(c)(3) and 501(c)(4) organizations are required to report the amount of grants and allocations to others, the total expenses, and revenue, if any, for each program service reported.

4a (Code:) (Expenses $ 1,331,437. including grants of $) (Revenue $)

CONTINUTED SUPPORT OF FIRST BES FELLOW OPERATED SCHOOL, FUTURO ACADEMY. SUPPORTED THE OPENING OF TWO NEW BES LED SCHOOLS, NEVADA PREP AND NEVADA RISE ACADEMIES IN 2018. PARTNERED WITH TEACH PLUS TO OFFER NEW TEACHER LEADER DEVELOPMENT FELLOWSHIP ACROSS NEVADA.

4b (Code:) (Expenses $ including grants of $) (Revenue $)

4c (Code:) (Expenses $ including grants of $) (Revenue $)

4d Other program services (Describe in Schedule O.)

(Expenses $ including grants of $) (Revenue $)

4e Total program service expenses ► 1,331,437.

Part IV Checklist of Required Schedules

			Yes	No
1	Is the organization described in section 501(c)(3) or 4947(a)(1) (other than a private foundation)? *If 'Yes,' complete Schedule A*	1	X	
2	Is the organization required to complete *Schedule B, Schedule of Contributors* (see instructions)?	2	X	
3	Did the organization engage in direct or indirect political campaign activities on behalf of or in opposition to candidates for public office? *If 'Yes,' complete Schedule C, Part I*	3		X
4	**Section 501(c)(3) organizations.** Did the organization engage in lobbying activities, or have a section 501(h) election in effect during the tax year? *If 'Yes,' complete Schedule C, Part II*	4		X
5	Is the organization a section 501(c)(4), 501(c)(5), or 501(c)(6) organization that receives membership dues, assessments, or similar amounts as defined in Revenue Procedure 98-19? *If 'Yes,' complete Schedule C, Part III*	5		X
6	Did the organization maintain any donor advised funds or any similar funds or accounts for which donors have the right to provide advice on the distribution or investment of amounts in such funds or accounts? *If 'Yes,' complete Schedule D, Part I*	6		X
7	Did the organization receive or hold a conservation easement, including easements to preserve open space, the environment, historic land areas, or historic structures? *If 'Yes,' complete Schedule D, Part II*	7		X
8	Did the organization maintain collections of works of art, historical treasures, or other similar assets? *If 'Yes,' complete Schedule D, Part III*	8		X
9	Did the organization report an amount in Part X, line 21, for escrow or custodial account liability, serve as a custodian for amounts not listed in Part X; or provide credit counseling, debt management, credit repair, or debt negotiation services? *If 'Yes,' complete Schedule D, Part IV*	9		X
10	Did the organization, directly or through a related organization, hold assets in temporarily restricted endowments, permanent endowments, or quasi-endowments? *If 'Yes,' complete Schedule D, Part V*	10		X
11	If the organization's answer to any of the following questions is 'Yes', then complete Schedule D, Parts VI, VII, VIII, IX, or X as applicable.			
a	Did the organization report an amount for land, buildings, and equipment in Part X, line 10? *If 'Yes,' complete Schedule D, Part VI*	11a	X	
b	Did the organization report an amount for investments – other securities in Part X, line 12 that is 5% or more of its total assets reported in Part X, line 16? *If 'Yes,' complete Schedule D, Part VII*	11b		X
c	Did the organization report an amount for investments – program related in Part X, line 13 that is 5% or more of its total assets reported in Part X, line 16? *If 'Yes,' complete Schedule D, Part VIII*	11c		X
d	Did the organization report an amount for other assets in Part X, line 15 that is 5% or more of its total assets reported in Part X, line 16? *If 'Yes,' complete Schedule D, Part IX*	11d		X
e	Did the organization report an amount for other liabilities in Part X, line 25? *If 'Yes,' complete Schedule D, Part X*	11e	X	
f	Did the organization's separate or consolidated financial statements for the tax year include a footnote that addresses the organization's liability for uncertain tax positions under FIN 48 (ASC 740)? *If 'Yes,' complete Schedule D, Part X*	11f		X
12a	Did the organization obtain separate, independent audited financial statements for the tax year? *If 'Yes,' complete Schedule D, Parts XI and XII*	12a	X	
b	Was the organization included in consolidated, independent audited financial statements for the tax year? *If 'Yes,' and if the organization answered 'No' to line 12a, then completing Schedule D, Parts XI and XII is optional*	12b		X
13	Is the organization a school described in section 170(b)(1)(A)(ii)? *If 'Yes,' complete Schedule E*	13		X
14a	Did the organization maintain an office, employees, or agents outside of the United States?	14a		X
b	Did the organization have aggregate revenues or expenses of more than $10,000 from grantmaking, fundraising, business, investment, and program service activities outside the United States, or aggregate foreign investments valued at $100,000 or more? *If 'Yes,' complete Schedule F, Parts I and IV*	14b		X
15	Did the organization report on Part IX, column (A), line 3, more than $5,000 of grants or other assistance to or for any foreign organization? *If 'Yes,' complete Schedule F, Parts II and IV*	15		X
16	Did the organization report on Part IX, column (A), line 3, more than $5,000 of aggregate grants or other assistance to or for foreign individuals? *If 'Yes,' complete Schedule F, Parts III and IV*	16		X
17	Did the organization report a total of more than $15,000 of expenses for professional fundraising services on Part IX, column (A), lines 6 and 11e? *If 'Yes,' complete Schedule G, Part I* (see instructions)	17		X
18	Did the organization report more than $15,000 total of fundraising event gross income and contributions on Part VIII, lines 1c and 8a? *If 'Yes,' complete Schedule G, Part II*	18		X
19	Did the organization report more than $15,000 of gross income from gaming activities on Part VIII, line 9a? *If 'Yes,' complete Schedule G, Part III*	19		X
20a	Did the organization operate one or more hospital facilities? *If 'Yes,' complete Schedule H*	20a		X
b	If 'Yes' to line 20a, did the organization attach a copy of its audited financial statements to this return?	20b		
21	Did the organization report more than $5,000 of grants or other assistance to any domestic organization or domestic government on Part IX, column (A), line 1? *If 'Yes,' complete Schedule I, Parts I and II*	21	X	

Part IV Checklist of Required Schedules *(continued)*

			Yes	No
22	Did the organization report more than $5,000 of grants or other assistance to or for domestic individuals on Part IX, column (A), line 2? *If 'Yes,' complete Schedule I, Parts I and III*	22		X
23	Did the organization answer 'Yes' to Part VII, Section A, line 3, 4, or 5 about compensation of the organization's current and former officers, directors, trustees, key employees, and highest compensated employees? *If 'Yes,' complete Schedule J*	23		X
24a	Did the organization have a tax-exempt bond issue with an outstanding principal amount of more than $100,000 as of the last day of the year, that was issued after December 31, 2002? *If 'Yes,' answer lines 24b through 24d and complete Schedule K. If 'No, 'go to line 25a*	24a		X
b	Did the organization invest any proceeds of tax-exempt bonds beyond a temporary period exception?	24b		
c	Did the organization maintain an escrow account other than a refunding escrow at any time during the year to defease any tax-exempt bonds?	24c		
d	Did the organization act as an 'on behalf of' issuer for bonds outstanding at any time during the year?	24d		
25a	**Section 501(c)(3), 501(c)(4), and 501(c)(29) organizations.** Did the organization engage in an excess benefit transaction with a disqualified person during the year? *If 'Yes,' complete Schedule L, Part I*	25a		X
b	Is the organization aware that it engaged in an excess benefit transaction with a disqualified person in a prior year, and that the transaction has not been reported on any of the organization's prior Forms 990 or 990-EZ? *If 'Yes,' complete Schedule L, Part I*	25b		X
26	Did the organization report any amount on Part X, line 5, 6, or 22 for receivables from or payables to any current or former officers, directors, trustees, key employees, highest compensated employees, or disqualified persons? *If 'Yes,' complete Schedule L, Part II*	26		X
27	Did the organization provide a grant or other assistance to an officer, director, trustee, key employee, substantial contributor or employee thereof, a grant selection committee member, or to a 35% controlled entity or family member of any of these persons? *If 'Yes,' complete Schedule L, Part III*	27		X
28	Was the organization a party to a business transaction with one of the following parties (see Schedule L, Part IV instructions for applicable filing thresholds, conditions, and exceptions):			
a	A current or former officer, director, trustee, or key employee? *If 'Yes,' complete Schedule L, Part IV*	28a		X
b	A family member of a current or former officer, director, trustee, or key employee? *If 'Yes,' complete Schedule L, Part IV*	28b		X
c	An entity of which a current or former officer, director, trustee, or key employee (or a family member thereof) was an officer, director, trustee, or direct or indirect owner? *If 'Yes,' complete Schedule L, Part IV*	28c		X
29	Did the organization receive more than $25,000 in non-cash contributions? *If 'Yes,' complete Schedule M*	29		X
30	Did the organization receive contributions of art, historical treasures, or other similar assets, or qualified conservation contributions? *If 'Yes,' complete Schedule M*	30		X
31	Did the organization liquidate, terminate, or dissolve and cease operations? *If 'Yes,' complete Schedule N, Part I*	31		X
32	Did the organization sell, exchange, dispose of, or transfer more than 25% of its net assets? *If 'Yes,' complete Schedule N, Part II*	32		X
33	Did the organization own 100% of an entity disregarded as separate from the organization under Regulations sections 301.7701-2 and 301.7701-3? *If 'Yes,' complete Schedule R, Part I*	33		X
34	Was the organization related to any tax-exempt or taxable entity? *If 'Yes,' complete Schedule R, Part II, III, or IV, and Part V, line 1*	34		X
35a	Did the organization have a controlled entity within the meaning of section 512(b)(13)?	35a		X
b	If 'Yes' to line 35a, did the organization receive any payment from or engage in any transaction with a controlled entity within the meaning of section 512(b)(13)? *If 'Yes,' complete Schedule R, Part V, line 2*	35b		
36	**Section 501(c)(3) organizations.** Did the organization make any transfers to an exempt non-charitable related organization? *If 'Yes,' complete Schedule R, Part V, line 2*	36		X
37	Did the organization conduct more than 5% of its activities through an entity that is not a related organization and that is treated as a partnership for federal income tax purposes? *If 'Yes,' complete Schedule R, Part VI*	37		X
38	Did the organization complete Schedule O and provide explanations in Schedule O for Part VI, lines 11b and 19? **Note.** All Form 990 filers are required to complete Schedule O	38		X

Part V Statements Regarding Other IRS Filings and Tax Compliance

Check if Schedule O contains a response or note to any line in this Part V ☐

				Yes	No
1a	Enter the number reported in Box 3 of Form 1096. Enter -0- if not applicable	1a	9		
b	Enter the number of Forms W-2G included in line 1a. Enter -0- if not applicable	1b	0		
c	Did the organization comply with backup withholding rules for reportable payments to vendors and reportable gaming (gambling) winnings to prize winners?		1c	X	

Part V Statements Regarding Other IRS Filings and Tax Compliance *(continued)*

			Yes	No
2a	Enter the number of employees reported on Form W-3, Transmittal of Wage and Tax Statements, filed for the calendar year ending with or within the year covered by this return. **2a** 6			
b	If at least one is reported on line 2a, did the organization file all required federal employment tax returns?	2b	X	
	Note. If the sum of lines 1a and 2a is greater than 250, you may be required to *e-file* (see instructions)			
3a	Did the organization have unrelated business gross income of $1,000 or more during the year?	3a		X
b	If 'Yes,' has it filed a Form 990-T for this year? *If 'No' to line 3b, provide an explanation in Schedule O*	3b		
4a	At any time during the calendar year, did the organization have an interest in, or a signature or other authority over, a financial account in a foreign country (such as a bank account, securities account, or other financial account)?	4a		X
b	If 'Yes,' enter the name of the foreign country: ►			
	See instructions for filing requirements for FinCEN Form 114, Report of Foreign Bank and Financial Accounts (FBAR).			
5a	Was the organization a party to a prohibited tax shelter transaction at any time during the tax year?	5a		X
b	Did any taxable party notify the organization that it was or is a party to a prohibited tax shelter transaction?	5b		X
c	If 'Yes,' to line 5a or 5b, did the organization file Form 8886-T?	5c		
6a	Does the organization have annual gross receipts that are normally greater than $100,000, and did the organization solicit any contributions that were not tax deductible as charitable contributions?	6a		X
b	If 'Yes,' did the organization include with every solicitation an express statement that such contributions or gifts were not tax deductible?	6b		
7	**Organizations that may receive deductible contributions under section 170(c).**			
a	Did the organization receive a payment in excess of $75 made partly as a contribution and partly for goods and services provided to the payor?	7a		X
b	If 'Yes,' did the organization notify the donor of the value of the goods or services provided?	7b		
c	Did the organization sell, exchange, or otherwise dispose of tangible personal property for which it was required to file Form 8282?	7c		X
d	If 'Yes,' indicate the number of Forms 8282 filed during the year. **7d**			
e	Did the organization receive any funds, directly or indirectly, to pay premiums on a personal benefit contract?	7e		X
f	Did the organization, during the year, pay premiums, directly or indirectly, on a personal benefit contract?	7f		X
g	If the organization received a contribution of qualified intellectual property, did the organization file Form 8899 as required?	7g		
h	If the organization received a contribution of cars, boats, airplanes, or other vehicles, did the organization file a Form 1098-C?	7h		
8	**Sponsoring organizations maintaining donor advised funds.** Did a donor advised fund maintained by the sponsoring organization have excess business holdings at any time during the year?	8		X
9	**Sponsoring organizations maintaining donor advised funds.**			
a	Did the sponsoring organization make any taxable distributions under section 4966?	9a		
b	Did the sponsoring organization make a distribution to a donor, donor advisor, or related person?	9b		
10	**Section 501(c)(7) organizations.** Enter:			
a	Initiation fees and capital contributions included on Part VIII, line 12. **10a**			
b	Gross receipts, included on Form 990, Part VIII, line 12, for public use of club facilities **10b**			
11	**Section 501(c)(12) organizations.** Enter:			
a	Gross income from members or shareholders **11a**			
b	Gross income from other sources (Do not net amounts due or paid to other sources against amounts due or received from them.) **11b**			
12a	**Section 4947(a)(1) non-exempt charitable trusts.** Is the organization filing Form 990 in lieu of Form 1041?	12a		
b	If 'Yes,' enter the amount of tax-exempt interest received or accrued during the year. **12b**			
13	**Section 501(c)(29) qualified nonprofit health insurance issuers.**			
a	Is the organization licensed to issue qualified health plans in more than one state?	13a		
	Note. See the instructions for additional information the organization must report on Schedule O.			
b	Enter the amount of reserves the organization is required to maintain by the states in which the organization is licensed to issue qualified health plans **13b**			
c	Enter the amount of reserves on hand **13c**			
14a	Did the organization receive any payments for indoor tanning services during the tax year?	14a		X
b	If 'Yes,' has it filed a Form 720 to report these payments? *If 'No,' provide an explanation in Schedule O*	14b		
15	Is the organization subject to the section 4960 tax on payment(s) of more than $1,000,000 in remuneration or excess parachute payment(s) during the year? If 'Yes,' see instructions and file Form 4720, Schedule N.	15		X
16	Is the organization an educational institution subject to the section 4968 excise tax on net investment income? If 'Yes,' complete Form 4720, Schedule O.	16		X

Part VI **Governance, Management, and Disclosure** *For each 'Yes' response to lines 2 through 7b below, and for a 'No' response to line 8a, 8b, or 10b below, describe the circumstances, processes, or changes in Schedule O. See instructions.*

Check if Schedule O contains a response or note to any line in this Part VI X

Section A. Governing Body and Management

			Yes	No
1a	Enter the number of voting members of the governing body at the end of the tax year 1a	3		
	If there are material differences in voting rights among members of the governing body, or if the governing body delegated broad authority to an executive committee or similar committee, explain in Schedule O.			
b	Enter the number of voting members included in line 1a, above, who are independent 1b	3		
2	Did any officer, director, trustee, or key employee have a family relationship or a business relationship with any other officer, director, trustee, or key employee? 2			X
3	Did the organization delegate control over management duties customarily performed by or under the direct supervision of officers, directors, or trustees, or key employees to a management company or other person? 3			X
4	Did the organization make any significant changes to its governing documents since the prior Form 990 was filed? 4			X
5	Did the organization become aware during the year of a significant diversion of the organization's assets? 5			X
6	Did the organization have members or stockholders? 6			X
7a	Did the organization have members, stockholders, or other persons who had the power to elect or appoint one or more members of the governing body? 7a			X
b	Are any governance decisions of the organization reserved to (or subject to approval by) members, stockholders, or persons other than the governing body? 7b			X
8	Did the organization contemporaneously document the meetings held or written actions undertaken during the year by the following:			
a	The governing body? 8a		X	
b	Each committee with authority to act on behalf of the governing body? 8b			X
9	Is there any officer, director, trustee, or key employee listed in Part VII, Section A, who cannot be reached at the organization's mailing address? *If 'Yes,' provide the names and addresses in Schedule O.* 9			X

Section B. Policies *(This Section B requests information about policies not required by the Internal Revenue Code.)*

			Yes	No
10a	Did the organization have local chapters, branches, or affiliates? 10a			X
b	If 'Yes,' did the organization have written policies and procedures governing the activities of such chapters, affiliates, and branches to ensure their operations are consistent with the organization's exempt purposes? 10b			
11a	Has the organization provided a complete copy of this Form 990 to all members of its governing body before filing the form? 11a		X	
b	Describe in Schedule O the process, if any, used by the organization to review this Form 990. SEE SCHEDULE O			
12a	Did the organization have a written conflict of interest policy? *If 'No,' go to line 13* 12a		X	
b	Were officers, directors, or trustees, and key employees required to disclose annually interests that could give rise to conflicts? 12b		X	
c	Did the organization regularly and consistently monitor and enforce compliance with the policy? *If 'Yes,' describe in Schedule O how this was done* 12c			X
13	Did the organization have a written whistleblower policy? 13		X	
14	Did the organization have a written document retention and destruction policy? 14		X	
15	Did the process for determining compensation of the following persons include a review and approval by independent persons, comparability data, and contemporaneous substantiation of the deliberation and decision?			
a	The organization's CEO, Executive Director, or top management official. SEE SCHEDULE O 15a		X	
b	Other officers or key employees of the organization 15b			X
	If 'Yes' to line 15a or 15b, describe the process in Schedule O (see instructions).			
16a	Did the organization invest in, contribute assets to, or participate in a joint venture or similar arrangement with a taxable entity during the year? 16a			X
b	If 'Yes,' did the organization follow a written policy or procedure requiring the organization to evaluate its participation in joint venture arrangements under applicable federal tax law, and take steps to safeguard the organization's exempt status with respect to such arrangements? 16b			

Section C. Disclosure

17 List the states with which a copy of this Form 990 is required to be filed ► NONE

18 Section 6104 requires an organization to make its Forms 1023 (1024 or 1024-A if applicable), 990, and 990-T (Section 501(c)(3)s only) available for public inspection. Indicate how you made these available. Check all that apply.

☐ Own website ☐ Another's website ☒ Upon request ☐ Other *(explain in Schedule O)*

19 Describe in Schedule O whether (and if so, how) the organization made its governing documents, conflict of interest policy, and financial statements available to the public during the tax year. SEE SCHEDULE O

20 State the name, address, and telephone number of the person who possesses the organization's books and records ►

WALLACE NEUMANN & VERVILLE LLP 8930 SPANISH RIDGE AVENUE LAS VEGAS NV 89148 (702) 387

Part VII Compensation of Officers, Directors, Trustees, Key Employees, Highest Compensated Employees, and Independent Contractors

Check if Schedule O contains a response or note to any line in this Part VII. ☐

Section A. Officers, Directors, Trustees, Key Employees, and Highest Compensated Employees

1 a Complete this table for all persons required to be listed. Report compensation for the calendar year ending with or within the organization's tax year.

- List all of the organization's **current** officers, directors, trustees (whether individuals or organizations), regardless of amount of compensation. Enter -0- in columns (D), (E), and (F) if no compensation was paid.
- List all of the organization's **current** key employees, if any. See instructions for definition of 'key employee.'
- List the organization's five **current** highest compensated employees (other than an officer, director, trustee, or key employee) who received reportable compensation (Box 5 of Form W-2 and/or Box 7 of Form 1099-MISC) of more than $100,000 from the organization and any related organizations.
- List all of the organization's **former** officers, key employees, and highest compensated employees who received more than $100,000 of reportable compensation from the organization and any related organizations.
- List all of the organization's **former directors or trustees** that received, in the capacity as a former director or trustee of the organization, more than $10,000 of reportable compensation from the organization and any related organizations.

List persons in the following order: individual trustees or directors; institutional trustees; officers; key employees; highest compensated employees; and former such persons.

☐ Check this box if neither the organization nor any related organization compensated any current officer, director, or trustee.

(A) Name and Title	(B) Average hours per week (list any hours for related organizations below dotted line)	(C) Position (do not check more than one box, unless person is both an officer and a director/trustee)						(D) Reportable compensation from the organization (W-2/1099-MISC)	(E) Reportable compensation from related organizations (W-2/1099-MISC)	(F) Estimated amount of other compensation from the organization and related organizations
		Individual trustee or director	Institutional trustee	Officer	Key employee	Highest compensated employee	Former			
(1) MAUREEN SHAFER	2									
SECRETARY	0	X						0.	0.	0.
(2) FRANCISCO AGUILAR	2									
TREASURER	0	X		X				0.	0.	0.
(3) BRYANT CENTENO-MONROY	2									
DIRECTOR	0	X						0.	0.	0.
(4) MILES DICKSON	2									
BOARD CHAIR	0	X		X				0.	0.	0.
(5) JANA WILCOX LAVIN	40									
EXECUTIVE DIR.	0			X				145,891.	0.	0.
(6)										
(7)										
(8)										
(9)										
(10)										
(11)										
(12)										
(13)										
(14)										

Part VII Section A. Officers, Directors, Trustees, Key Employees, and Highest Compensated Employees *(continued)*

(A) Name and title	(B) Average hours per week (list any hours for related organiza - tions below dotted line)	(C) Position (do not check more than one box, unless person is both an officer and a director/trustee)						(D) Reportable compensation from the organization (W-2/1099-MISC)	(E) Reportable compensation from related organizations (W-2/1099-MISC)	(F) Estimated amount of other compensation from the organization and related organizations
		Individual trustee or director	Institutional trustee	Officer	Key employee	Highest compensated employee	Former			
(15)										
(16)										
(17)										
(18)										
(19)										
(20)										
(21)										
(22)										
(23)										
(24)										
(25)										
1 b Sub-total ►								145,891.	0.	0.
c Total from continuation sheets to Part VII, Section A ►								0.	0.	0.
d Total (add lines 1b and 1c) ►								145,891.	0.	0.

2 Total number of individuals (including but not limited to those listed above) who received more than $100,000 of reportable compensation from the organization ► 1

		Yes	No
3 Did the organization list any **former** officer, director, or trustee, key employee, or highest compensated employee on line 1a? *If 'Yes,' complete Schedule J for such individual*	3		X
4 For any individual listed on line 1a, is the sum of reportable compensation and other compensation from the organization and related organizations greater than $150,000? *If 'Yes,' complete Schedule J for such individual*	4		X
5 Did any person listed on line 1a receive or accrue compensation from any unrelated organization or individual for services rendered to the organization? *If 'Yes,' complete Schedule J for such person*	5		X

Section B. Independent Contractors

1 Complete this table for your five highest compensated independent contractors that received more than $100,000 of compensation from the organization. Report compensation for the calendar year ending with or within the organization's tax year.

(A) Name and business address	(B) Description of services	(C) Compensation

2 Total number of independent contractors (including but not limited to those listed above) who received more than $100,000 of compensation from the organization ► 0

Part VIII Statement of Revenue

Check if Schedule O contains a response or note to any line in this Part VIII ☐

			(A) Total revenue	(B) Related or exempt function revenue	(C) Unrelated business revenue	(D) Revenue excluded from tax under sections 512-514
Contributions, Gifts, Grants and Other Similar Amounts	1a Federated campaigns	1a				
	b Membership dues	1b				
	c Fundraising events	1c				
	d Related organizations	1d				
	e Government grants (contributions)	1e				
	f All other contributions, gifts, grants, and similar amounts not included above	1f	9,650,989.			
	g Noncash contributions included in lines 1a-1f: $					
	h **Total.** Add lines 1a-1f		9,650,989.			
Program Service Revenue		Business Code				
	2a					
	b					
	c					
	d					
	e					
	f All other program service revenue					
	g **Total.** Add lines 2a-2f					
Other Revenue	3 Investment income (including dividends, interest and other similar amounts)					
	4 Income from investment of tax-exempt bond proceeds					
	5 Royalties					
		(i) Real	(ii) Personal			
	6a Gross rents					
	b Less: rental expenses					
	c Rental income or (loss)					
	d Net rental income or (loss)					
		(i) Securities	(ii) Other			
	7a Gross amount from sales of assets other than inventory					
	b Less: cost or other basis and sales expenses					
	c Gain or (loss)					
	d Net gain or (loss)					
	8a Gross income from fundraising events (not including $ _____ of contributions reported on line 1c). See Part IV, line 18	a				
	b Less: direct expenses	b				
	c Net income or (loss) from fundraising events					
	9a Gross income from gaming activities. See Part IV, line 19	a				
	b Less: direct expenses	b				
	c Net income or (loss) from gaming activities					
	10a Gross sales of inventory, less returns and allowances	a				
	b Less: cost of goods sold	b				
	c Net income or (loss) from sales of inventory					
	Miscellaneous Revenue	Business Code				
	11a					
	b					
	c					
	d All other revenue					
	e **Total.** Add lines 11a-11d					
	12 **Total revenue.** See instructions		9,650,989.	0.	0.	0.

Part IX Statement of Functional Expenses

Section 501(c)(3) and 501(c)(4) organizations must complete all columns. All other organizations must complete column (A).

Check if Schedule O contains a response or note to any line in this Part IX ☐

Do not include amounts reported on lines 6b, 7b, 8b, 9b, and 10b of Part VIII.	(A) Total expenses	(B) Program service expenses	(C) Management and general expenses	(D) Fundraising expenses
1 Grants and other assistance to domestic organizations and domestic governments. See Part IV, line 21	92,835.	92,835.		
2 Grants and other assistance to domestic individuals. See Part IV, line 22				
3 Grants and other assistance to foreign organizations, foreign governments, and foreign individuals. See Part IV, lines 15 and 16				
4 Benefits paid to or for members				
5 Compensation of current officers, directors, trustees, and key employees	146,058.	0.	146,058.	0.
6 Compensation not included above, to disqualified persons (as defined under section 4958(f)(1)) and persons described in section 4958(c)(3)(B)	0.	0.	0.	0.
7 Other salaries and wages	273,111.	194,327.	14,106.	64,678.
8 Pension plan accruals and contributions (include section 401(k) and 403(b) employer contributions)				
9 Other employee benefits	29,384.	13,622.	11,228.	4,534.
10 Payroll taxes	35,508.	16,462.	13,568.	5,478.
11 Fees for services (non-employees):				
a Management				
b Legal				
c Accounting				
d Lobbying				
e Professional fundraising services. See Part IV, line 17				
f Investment management fees				
g Other. (If line 11g amount exceeds 10% of line 25, column (A) amount, list line 11g expenses on Schedule O.)				
12 Advertising and promotion	2,643.		2,643.	
13 Office expenses	17,272.	8,007.	6,600.	2,665.
14 Information technology				
15 Royalties				
16 Occupancy	25,015.	11,597.	9,558.	3,860.
17 Travel	12,346.	5,724.	4,717.	1,905.
18 Payments of travel or entertainment expenses for any federal, state, or local public officials				
19 Conferences, conventions, and meetings				
20 Interest				
21 Payments to affiliates				
22 Depreciation, depletion, and amortization	10,738.	4,978.	4,103.	1,657.
23 Insurance	8,742.	4,053.	3,340.	1,349.
24 Other expenses. Itemize expenses not covered above (List miscellaneous expenses in line 24e. If line 24e amount exceeds 10% of line 25, column (A) amount, list line 24e expenses on Schedule O.)				
a FELLOWSHIP TRAINING	862,155.	862,155.		
b CONSULTING	137,580.	63,782.	52,569.	21,229.
c PROFESSIONAL SERVICES	36,574.	16,956.	13,975.	5,643.
d COMMUNITY OUTREACH	28,834.	28,834.		
e All other expenses	17,482.	8,105.	6,680.	2,697.
25 **Total functional expenses.** Add lines 1 through 24e	1,736,277.	1,331,437.	289,145.	115,695.
26 **Joint costs.** Complete this line only if the organization reported in column (B) joint costs from a combined educational campaign and fundraising solicitation. Check here ► ☐ if following SOP 98-2 (ASC 958-720)				

Part X Balance Sheet

Check if Schedule O contains a response or note to any line in this Part X ☐

				(A) Beginning of year		(B) End of year
Assets	1	Cash — non-interest-bearing		3,885,166.	1	10,893,643.
	2	Savings and temporary cash investments			2	
	3	Pledges and grants receivable, net		50,000.	3	1,000,000.
	4	Accounts receivable, net			4	
	5	Loans and other receivables from current and former officers, directors, trustees, key employees, and highest compensated employees. Complete Part II of Schedule L			5	
	6	Loans and other receivables from other disqualified persons (as defined under section 4958(f)(1)), persons described in section 4958(c)(3)(B), and contributing employers and sponsoring organizations of section 501(c)(9) voluntary employees' beneficiary organizations (see instructions). Complete Part II of Schedule L			6	
	7	Notes and loans receivable, net			7	
	8	Inventories for sale or use			8	
	9	Prepaid expenses and deferred charges		3,712.	9	977.
	10a	Land, buildings, and equipment: cost or other basis. Complete Part VI of Schedule D	10a 40,919.			
	b	Less: accumulated depreciation	10b 28,625.	21,375.	10c	12,294.
	11	Investments — publicly traded securities			11	
	12	Investments — other securities. See Part IV, line 11			12	
	13	Investments — program-related. See Part IV, line 11			13	
	14	Intangible assets		695.	14	
	15	Other assets. See Part IV, line 11		1,250.	15	1,250.
	16	**Total assets.** Add lines 1 through 15 (must equal line 34)		3,962,198.	16	11,908,164.
Liabilities	17	Accounts payable and accrued expenses		3,566.	17	10,586.
	18	Grants payable			18	
	19	Deferred revenue			19	
	20	Tax-exempt bond liabilities			20	
	21	Escrow or custodial account liability. Complete Part IV of Schedule D			21	
	22	Loans and other payables to current and former officers, directors, trustees, key employees, highest compensated employees, and disqualified persons. Complete Part II of Schedule L			22	
	23	Secured mortgages and notes payable to unrelated third parties			23	
	24	Unsecured notes and loans payable to unrelated third parties			24	
	25	Other liabilities (including federal income tax, payables to related third parties, and other liabilities not included on lines 17-24). Complete Part X of Schedule D		18,950.	25	43,184.
	26	**Total liabilities.** Add lines 17 through 25		22,516.	26	53,770.
Net Assets or Fund Balances		**Organizations that follow SFAS 117 (ASC 958), check here ► ☒ and complete lines 27 through 29, and lines 33 and 34.**				
	27	Unrestricted net assets		734,476.	27	1,795,434.
	28	Temporarily restricted net assets		3,205,206.	28	10,058,960.
	29	Permanently restricted net assets			29	
		Organizations that do not follow SFAS 117 (ASC 958), check here ► ☐ and complete lines 30 through 34.				
	30	Capital stock or trust principal, or current funds			30	
	31	Paid-in or capital surplus, or land, building, or equipment fund			31	
	32	Retained earnings, endowment, accumulated income, or other funds			32	
	33	Total net assets or fund balances		3,939,682.	33	11,854,394.
	34	Total liabilities and net assets/fund balances		3,962,198.	34	11,908,164.

Part XI Reconciliation of Net Assets

Check if Schedule O contains a response or note to any line in this Part XI ☐

1	Total revenue (must equal Part VIII, column (A), line 12)	1	9,650,989.
2	Total expenses (must equal Part IX, column (A), line 25)	2	1,736,277.
3	Revenue less expenses. Subtract line 2 from line 1	3	7,914,712.
4	Net assets or fund balances at beginning of year (must equal Part X, line 33, column (A))	4	3,939,682.
5	Net unrealized gains (losses) on investments	5	
6	Donated services and use of facilities	6	
7	Investment expenses	7	
8	Prior period adjustments	8	
9	Other changes in net assets or fund balances (explain in Schedule O)	9	0.
10	Net assets or fund balances at end of year. Combine lines 3 through 9 (must equal Part X, line 33, column (B))	10	11,854,394.

Part XII Financial Statements and Reporting

Check if Schedule O contains a response or note to any line in this Part XII ☐

			Yes	No
1	Accounting method used to prepare the Form 990: ☐ Cash ☒ Accrual ☐ Other _____			
	If the organization changed its method of accounting from a prior year or checked 'Other,' explain in Schedule O.			
2a	Were the organization's financial statements compiled or reviewed by an independent accountant?	2a		X
	If 'Yes,' check a box below to indicate whether the financial statements for the year were compiled or reviewed on a separate basis, consolidated basis, or both: ☐ Separate basis ☐ Consolidated basis ☐ Both consolidated and separate basis			
b	Were the organization's financial statements audited by an independent accountant?	2b	X	
	If 'Yes,' check a box below to indicate whether the financial statements for the year were audited on a separate basis, consolidated basis, or both: ☒ Separate basis ☐ Consolidated basis ☐ Both consolidated and separate basis			
c	If 'Yes' to line 2a or 2b, does the organization have a committee that assumes responsibility for oversight of the audit, review, or compilation of its financial statements and selection of an independent accountant?	2c	X	
	If the organization changed either its oversight process or selection process during the tax year, explain in Schedule O.			
3a	As a result of a federal award, was the organization required to undergo an audit or audits as set forth in the Single Audit Act and OMB Circular A-133?	3a		X
b	If 'Yes,' did the organization undergo the required audit or audits? If the organization did not undergo the required audit or audits, explain why in Schedule O and describe any steps taken to undergo such audits	3b		

Part III Support Schedule for Organizations Described in Section 509(a)(2)
(Complete only if you checked the box on line 10 of Part I or if the organization failed to qualify under Part II. If the organization fails to qualify under the tests listed below, please complete Part II.)

Section A. Public Support

Calendar year (or fiscal year beginning in) ►	(a) 2014	(b) 2015	(c) 2016	(d) 2017	(e) 2018	(f) Total
1 Gifts, grants, contributions, and membership fees received. (Do not include any 'unusual grants.')						
2 Gross receipts from admissions, merchandise sold or services performed, or facilities furnished in any activity that is related to the organization's tax-exempt purpose						
3 Gross receipts from activities that are not an unrelated trade or business under section 513						
4 Tax revenues levied for the organization's benefit and either paid to or expended on its behalf						
5 The value of services or facilities furnished by a governmental unit to the organization without charge						
6 **Total.** Add lines 1 through 5						
7a Amounts included on lines 1, 2, and 3 received from disqualified persons						
b Amounts included on lines 2 and 3 received from other than disqualified persons that exceed the greater of $5,000 or 1% of the amount on line 13 for the year						
c Add lines 7a and 7b						
8 **Public support.** (Subtract line 7c from line 6.)						

Section B. Total Support

Calendar year (or fiscal year beginning in) ►	(a) 2014	(b) 2015	(c) 2016	(d) 2017	(e) 2018	(f) Total
9 Amounts from line 6						
10a Gross income from interest, dividends, payments received on securities loans, rents, royalties, and income from similar sources						
b Unrelated business taxable income (less section 511 taxes) from businesses acquired after June 30, 1975						
c Add lines 10a and 10b						
11 Net income from unrelated business activities not included in line 10b, whether or not the business is regularly carried on						
12 Other income. Do not include gain or loss from the sale of capital assets (Explain in Part VI.)						
13 **Total support.** (Add lines 9, 10c, 11, and 12.)						

14 **First five years.** If the Form 990 is for the organization's first, second, third, fourth, or fifth tax year as a section 501(c)(3) organization, check this box and **stop here** ► ☐

Section C. Computation of Public Support Percentage

15	Public support percentage for 2018 (line 8, column (f), divided by line 13, column (f))	15	%
16	Public support percentage from 2017 Schedule A, Part III, line 15	16	%

Section D. Computation of Investment Income Percentage

17	Investment income percentage for **2018** (line 10c, column (f), divided by line 13, column (f))	17	%
18	Investment income percentage from **2017** Schedule A, Part III, line 17	18	%

19a **33-1/3% support tests—2018.** If the organization did not check the box on line 14, and line 15 is more than 33-1/3%, and line 17 is not more than 33-1/3%, check this box and **stop here.** The organization qualifies as a publicly supported organization ► ☐

b **33-1/3% support tests—2017.** If the organization did not check a box on line 14 or line 19a, and line 16 is more than 33-1/3%, and line 18 is not more than 33-1/3%, check this box and **stop here.** The organization qualifies as a publicly supported organization ► ☐

20 **Private foundation.** If the organization did not check a box on line 14, 19a, or 19b, check this box and see instructions ► ☐

Part IV Supporting Organizations

(Complete only if you checked a box in line 12 on Part I. If you checked 12a of Part I, complete Sections A and B. If you checked 12b of Part I, complete Sections A and C. If you checked 12c of Part I, complete Sections A, D, and E. If you checked 12d of Part I, complete Sections A and D, and complete Part V.)

Section A. All Supporting Organizations

		Yes	No
1 Are all of the organization's supported organizations listed by name in the organization's governing documents? *If 'No,' describe in* ***Part VI*** *how the supported organizations are designated. If designated by class or purpose, describe the designation. If historic and continuing relationship, explain.*	1		
2 Did the organization have any supported organization that does not have an IRS determination of status under section 509(a)(1) or (2)? *If 'Yes,' explain in* ***Part VI*** *how the organization determined that the supported organization was described in section 509(a)(1) or (2).*	2		
3a Did the organization have a supported organization described in section 501(c)(4), (5), or (6)? *If 'Yes,' answer (b) and (c) below.*	3a		
b Did the organization confirm that each supported organization qualified under section 501(c)(4), (5), or (6) and satisfied the public support tests under section 509(a)(2)? *If 'Yes,' describe in* ***Part VI*** *when and how the organization made the determination.*	3b		
c Did the organization ensure that all support to such organizations was used exclusively for section 170(c)(2)(B) purposes? *If 'Yes,' explain in* ***Part VI*** *what controls the organization put in place to ensure such use.*	3c		
4a Was any supported organization not organized in the United States ('foreign supported organization')? *If 'Yes' and if you checked 12a or 12b in Part I, answer (b) and (c) below.*	4a		
b Did the organization have ultimate control and discretion in deciding whether to make grants to the foreign supported organization? *If 'Yes,' describe in* ***Part VI*** *how the organization had such control and discretion despite being controlled or supervised by or in connection with its supported organizations.*	4b		
c Did the organization support any foreign supported organization that does not have an IRS determination under sections 501(c)(3) and 509(a)(1) or (2)? *If 'Yes,' explain in* ***Part VI*** *what controls the organization used to ensure that all support to the foreign supported organization was used exclusively for section 170(c)(2)(B) purposes.*	4c		
5a Did the organization add, substitute, or remove any supported organizations during the tax year? *If 'Yes,' answer (b) and (c) below (if applicable). Also, provide detail in* ***Part VI,*** *including (i) the names and EIN numbers of the supported organizations added, substituted, or removed; (ii) the reasons for each such action; (iii) the authority under the organization's organizing document authorizing such action; and (iv) how the action was accomplished (such as by amendment to the organizing document).*	5a		
b **Type I or Type II only.** Was any added or substituted supported organization part of a class already designated in the organization's organizing document?	5b		
c **Substitutions only.** Was the substitution the result of an event beyond the organization's control?	5c		
6 Did the organization provide support (whether in the form of grants or the provision of services or facilities) to anyone other than (i) its supported organizations, (ii) individuals that are part of the charitable class benefited by one or more of its supported organizations, or (iii) other supporting organizations that also support or benefit one or more of the filing organization's supported organizations? *If 'Yes,' provide detail in* ***Part VI.***	6		
7 Did the organization provide a grant, loan, compensation, or other similar payment to a substantial contributor (as defined in section 4958(c)(3)(C)), a family member of a substantial contributor, or a 35% controlled entity with regard to a substantial contributor? *If 'Yes,' complete Part I of Schedule L (Form 990 or 990-EZ).*	7		
8 Did the organization make a loan to a disqualified person (as defined in section 4958) not described in line 7? *If 'Yes,' complete Part I of Schedule L (Form 990 or 990-EZ).*	8		
9a Was the organization controlled directly or indirectly at any time during the tax year by one or more disqualified persons as defined in section 4946 (other than foundation managers and organizations described in section 509(a)(1) or (2))? *If 'Yes,' provide detail in* ***Part VI.***	9a		
b Did one or more disqualified persons (as defined in line 9a) hold a controlling interest in any entity in which the supporting organization had an interest? *If 'Yes,' provide detail in* ***Part VI.***	9b		
c Did a disqualified person (as defined in line 9a) have an ownership interest in, or derive any personal benefit from, assets in which the supporting organization also had an interest? *If 'Yes,' provide detail in* ***Part VI.***	9c		
10a Was the organization subject to the excess business holdings rules of section 4943 because of section 4943(f) (regarding certain Type II supporting organizations, and all Type III non-functionally integrated supporting organizations)? *If 'Yes,' answer 10b below.*	10a		
b Did the organization have any excess business holdings in the tax year? *(Use Schedule C, Form 4720, to determine whether the organization had excess business holdings.)*	10b		

Part IV Supporting Organizations *(continued)*

		Yes	No
11 Has the organization accepted a gift or contribution from any of the following persons?			
a A person who directly or indirectly controls, either alone or together with persons described in (b) and (c) below, the governing body of a supported organization?	11a		
b A family member of a person described in (a) above?	11b		
c A 35% controlled entity of a person described in (a) or (b) above? *If 'Yes' to a, b, or c, provide detail in* ***Part VI.***	11c		

Section B. Type I Supporting Organizations

		Yes	No
1 Did the directors, trustees, or membership of one or more supported organizations have the power to regularly appoint or elect at least a majority of the organization's directors or trustees at all times during the tax year? *If 'No,' describe in* ***Part VI*** *how the supported organization(s) effectively operated, supervised, or controlled the organization's activities. If the organization had more than one supported organization, describe how the powers to appoint and/or remove directors or trustees were allocated among the supported organizations and what conditions or restrictions, if any, applied to such powers during the tax year.*	1		
2 Did the organization operate for the benefit of any supported organization other than the supported organization(s) that operated, supervised, or controlled the supporting organization? *If 'Yes,' explain in* ***Part VI*** *how providing such benefit carried out the purposes of the supported organization(s) that operated, supervised, or controlled the supporting organization.*	2		

Section C. Type II Supporting Organizations

		Yes	No
1 Were a majority of the organization's directors or trustees during the tax year also a majority of the directors or trustees of each of the organization's supported organization(s)? *If 'No,' describe in* ***Part VI*** *how control or management of the supporting organization was vested in the same persons that controlled or managed the supported organization(s).*	1		

Section D. All Type III Supporting Organizations

		Yes	No
1 Did the organization provide to each of its supported organizations, by the last day of the fifth month of the organization's tax year, (i) a written notice describing the type and amount of support provided during the prior tax year, (ii) a copy of the Form 990 that was most recently filed as of the date of notification, and (iii) copies of the organization's governing documents in effect on the date of notification, to the extent not previously provided?	1		
2 Were any of the organization's officers, directors, or trustees either (i) appointed or elected by the supported organization(s) or (ii) serving on the governing body of a supported organization? *If 'No,' explain in* ***Part VI*** *how the organization maintained a close and continuous working relationship with the supported organization(s).*	2		
3 By reason of the relationship described in (2), did the organization's supported organizations have a significant voice in the organization's investment policies and in directing the use of the organization's income or assets at all times during the tax year? *If 'Yes,' describe in* ***Part VI*** *the role the organization's supported organizations played in this regard.*	3		

Section E. Type III Functionally Integrated Supporting Organizations

1 *Check the box next to the method that the organization used to satisfy the Integral Part Test during the year* ***(see instructions).***

a ☐ The organization satisfied the Activities Test. *Complete* ***line 2*** *below.*

b ☐ The organization is the parent of each of its supported organizations. *Complete* ***line 3*** *below.*

c ☐ The organization supported a governmental entity. *Describe in* ***Part VI*** *how you supported a government entity (see instructions).*

2 Activities Test. ***Answer (a) and (b) below.***		Yes	No
a Did substantially all of the organization's activities during the tax year directly further the exempt purposes of the supported organization(s) to which the organization was responsive? *If 'Yes,' then in* ***Part VI identify those supported organizations and explain*** *how these activities directly furthered their exempt purposes, how the organization was responsive to those supported organizations, and how the organization determined that these activities constituted substantially all of its activities.*	2a		
b Did the activities described in (a) constitute activities that, but for the organization's involvement, one or more of the organization's supported organization(s) would have been engaged in? *If 'Yes,' explain in* ***Part VI*** *the reasons for the organization's position that its supported organization(s) would have engaged in these activities but for the organization's involvement.*	2b		
3 Parent of Supported Organizations. ***Answer (a) and (b) below.***			
a Did the organization have the power to regularly appoint or elect a majority of the officers, directors, or trustees of each of the supported organizations? *Provide details in* ***Part VI.***	3a		
b Did the organization exercise a substantial degree of direction over the policies, programs, and activities of each of its supported organizations? *If 'Yes,' describe in* ***Part VI*** *the role played by the organization in this regard.*	3b		

Part V Type III Non-Functionally Integrated 509(a)(3) Supporting Organizations

1 ☐ Check here if the organization satisfied the Integral Part Test as a qualifying trust on Nov. 20, 1970 (explain in Part VI). **See instructions.** All other Type III non-functionally integrated supporting organizations must complete Sections A through E.

Section A – Adjusted Net Income		(A) Prior Year	(B) Current Year (optional)
1 Net short-term capital gain	1		
2 Recoveries of prior-year distributions	2		
3 Other gross income (see instructions)	3		
4 Add lines 1 through 3.	4		
5 Depreciation and depletion	5		
6 Portion of operating expenses paid or incurred for production or collection of gross income or for management, conservation, or maintenance of property held for production of income (see instructions)	6		
7 Other expenses (see instructions)	7		
8 **Adjusted Net Income** (subtract lines 5, 6, and 7 from line 4)	8		

Section B – Minimum Asset Amount		(A) Prior Year	(B) Current Year (optional)
1 Aggregate fair market value of all non-exempt-use assets (see instructions for short tax year or assets held for part of year):			
a Average monthly value of securities	1a		
b Average monthly cash balances	1b		
c Fair market value of other non-exempt-use assets	1c		
d **Total** (add lines 1a, 1b, and 1c)	1d		
e **Discount** claimed for blockage or other factors (explain in detail in **Part VI**):			
2 Acquisition indebtedness applicable to non-exempt-use assets	2		
3 Subtract line 2 from line 1d.	3		
4 Cash deemed held for exempt use. Enter 1-1/2% of line 3 (for greater amount, see instructions).	4		
5 Net value of non-exempt-use assets (subtract line 4 from line 3)	5		
6 Multiply line 5 by .035.	6		
7 Recoveries of prior-year distributions	7		
8 **Minimum Asset Amount** (add line 7 to line 6)	8		

Section C – Distributable Amount			Current Year
1 Adjusted net income for prior year (from Section A, line 8, Column A)	1		
2 Enter 85% of line 1.	2		
3 Minimum asset amount for prior year (from Section B, line 8, Column A)	3		
4 Enter greater of line 2 or line 3.	4		
5 Income tax imposed in prior year	5		
6 **Distributable Amount.** Subtract line 5 from line 4, unless subject to emergency temporary reduction (see instructions).	6		

7 ☐ Check here if the current year is the organization's first as a non-functionally integrated Type III supporting organization (see instructions).

Part V **Type III Non-Functionally Integrated 509(a)(3) Supporting Organizations** *(continued)*

Section D – Distributions	Current Year
1 Amounts paid to supported organizations to accomplish exempt purposes	
2 Amounts paid to perform activity that directly furthers exempt purposes of supported organizations, in excess of income from activity	
3 Administrative expenses paid to accomplish exempt purposes of supported organizations	
4 Amounts paid to acquire exempt-use assets	
5 Qualified set-aside amounts (prior IRS approval required)	
6 Other distributions (describe in **Part VI**). See instructions.	
7 **Total annual distributions.** Add lines 1 through 6.	
8 Distributions to attentive supported organizations to which the organization is responsive (provide details in **Part VI**). See instructions.	
9 Distributable amount for 2018 from Section C, line 6	
10 Line 8 amount divided by line 9 amount	

Section E – Distribution Allocations (see instructions)	(i) Excess Distributions	(ii) Underdistributions Pre-2018	(iii) Distributable Amount for 2018
1 Distributable amount for 2018 from Section C, line 6			
2 Underdistributions, if any, for years prior to 2018 (reasonable cause required – explain in Part VI). See instructions.			
3 Excess distributions carryover, if any, to 2018			
a From 2013			
b From 2014			
c From 2015			
d From 2016			
e From 2017			
f **Total** of lines 3a through e			
g Applied to underdistributions of prior years			
h Applied to 2018 distributable amount			
i Carryover from 2013 not applied (see instructions)			
j Remainder. Subtract lines 3g, 3h, and 3i from 3f.			
4 Distributions for 2018 from Section D, line 7: $			
a Applied to underdistributions of prior years			
b Applied to 2018 distributable amount			
c Remainder. Subtract lines 4a and 4b from 4.			
5 Remaining underdistributions for years prior to 2018, if any. Subtract lines 3g and 4a from line 2. For result greater than zero, explain in Part VI. See instructions.			
6 Remaining underdistributions for 2018. Subtract lines 3h and 4b from line 1. For result greater than zero, explain in Part VI. See instructions.			
7 **Excess distributions carryover to 2019.** Add lines 3j and 4c.			
8 Breakdown of line 7:			
a Excess from 2014			
b Excess from 2015			
c Excess from 2016			
d Excess from 2017			
e Excess from 2018			

Part VI **Supplemental Information.** Provide the explanations required by Part II, line 10; Part II, line 17a or 17b;Part III, line 12; Part IV, Section A, lines 1, 2, 3b, 3c, 4b, 4c, 5a, 6, 9a, 9b, 9c, 11a, 11b, and 11c; Part IV, Section B, lines 1 and 2; Part IV, Section C, line 1; Part IV, Section D, lines 2 and 3; Part IV, Section E, lines 1c, 2a, 2b, 3a, and 3b; Part V, line 1; Part V, Section B, line 1e; Part V, Section D, lines 5, 6, and 8; and Part V, Section E, lines 2, 5, and 6. Also complete this part for any additional information. (See instructions.)

Schedule B
(Form 990, 990-EZ, or 990-PF)
Department of the Treasury
Internal Revenue Service

Schedule of Contributors

► Attach to Form 990, Form 990-EZ, or Form 990-PF.
► Go to *www.irs.gov/Form990* for the latest information.

OMB No. 1545-0047

2018

Name of the organization	Employer identification number
OPPORTUNITY 180	61-1753910

Organization type (check one):

Filers of:	Section:
Form 990 or 990-EZ	[X] 501(c)(3) (enter number) organization
	[ ] 4947(a)(1) nonexempt charitable trust **not** treated as a private foundation
	[ ] 527 political organization
Form 990-PF	[ ] 501(c)(3) exempt private foundation
	[ ] 4947(a)(1) nonexempt charitable trust treated as a private foundation
	[ ] 501(c)(3) taxable private foundation

Check if your organization is covered by the **General Rule** or a **Special Rule.**

Note: Only a section 501(c)(7), (8), or (10) organization can check boxes for both the General Rule and a Special Rule. See instructions.

General Rule

[ ] For an organization filing Form 990, 990-EZ, or 990-PF that received, during the year, contributions totaling $5,000 or more (in money or property) from any one contributor. Complete Parts I and II. See instructions for determining a contributor's total contributions.

Special Rules

[X] For an organization described in section 501(c)(3) filing Form 990 or 990-EZ that met the 33-1/3% support test of the regulations under sections 509(a)(1) and 170(b)(1)(A)(vi), that checked Schedule A (Form 990 or 990-EZ), Part II, line 13, 16a, or 16b, and that received from any one contributor, during the year, total contributions of the greater of (**1**) $5,000; or (**2**) 2% of the amount on (i) Form 990, Part VIII, line 1h; or (ii) Form 990-EZ, line 1. Complete Parts I and II.

[ ] For an organization described in section 501(c)(7), (8), or (10) filing Form 990 or 990-EZ that received from any one contributor, during the year, total contributions of more than $1,000 *exclusively* for religious, charitable, scientific, literary, or educational purposes, or for the prevention of cruelty to children or animals. Complete Parts I (entering 'N/A' in column (b) instead of the contributor name and address), II, and III.

[ ] For an organization described in section 501(c)(7), (8), or (10) filing Form 990 or 990-EZ that received from any one contributor, during the year, contributions *exclusively* for religious, charitable, etc., purposes, but no such contributions totaled more than $1,000. If this box is checked, enter here the total contributions that were received during the year for an *exclusively* religious, charitable, etc., purpose. Don't complete any of the parts unless the **General Rule** applies to this organization because it received *nonexclusively* religious, charitable, etc., contributions totaling $5,000 or more during the year . . . . . ► $ _____

Caution: An organization that isn't covered by the General Rule and/or the Special Rules doesn't file Schedule B (Form 990, 990-EZ, or 990-PF), but it **must** answer 'No' on Part IV, line 2, of its Form 990; or check the box on line H of its Form 990-EZ or on its Form 990-PF, Part I, line 2, to certify that it doesn't meet the filing requirements of Schedule B (Form 990, 990-EZ, or 990-PF).

Name of organization	Employer identification number
OPPORTUNITY 180	61-1753910

Part II **Noncash Property** (see instructions). Use duplicate copies of Part II if additional space is needed.

(a) No. from Part I	(b) Description of noncash property given	(c) FMV (or estimate) (See instructions.)	(d) Date received
	N/A	$	

(a) No. from Part I	(b) Description of noncash property given	(c) FMV (or estimate) (See instructions.)	(d) Date received
		$	

(a) No. from Part I	(b) Description of noncash property given	(c) FMV (or estimate) (See instructions.)	(d) Date received
		$	

(a) No. from Part I	(b) Description of noncash property given	(c) FMV (or estimate) (See instructions.)	(d) Date received
		$	

(a) No. from Part I	(b) Description of noncash property given	(c) FMV (or estimate) (See instructions.)	(d) Date received
		$	

(a) No. from Part I	(b) Description of noncash property given	(c) FMV (or estimate) (See instructions.)	(d) Date received
		$	

Name of organization: OPPORTUNITY 180

Employer identification number: 61-1753910

Part III ***Exclusively*** **religious, charitable, etc., contributions to organizations described in section 501(c)(7), (8), or (10) that total more than $1,000 for the year from any one contributor.** Complete columns (a) through (e) and the following line entry. For organizations completing Part III, enter the total of *exclusively* religious, charitable, etc., contributions of **$1,000 or less** for the year. (Enter this information once. See instructions.) ► $ N/A

Use duplicate copies of Part III if additional space is needed.

(a) No. from Part I	(b) Purpose of gift	(c) Use of gift	(d) Description of how gift is held
	N/A		

(e) Transfer of gift: Transferee's name, address, and ZIP + 4	Relationship of transferor to transferee

(a) No. from Part I	(b) Purpose of gift	(c) Use of gift	(d) Description of how gift is held

(e) Transfer of gift: Transferee's name, address, and ZIP + 4	Relationship of transferor to transferee

(a) No. from Part I	(b) Purpose of gift	(c) Use of gift	(d) Description of how gift is held

(e) Transfer of gift: Transferee's name, address, and ZIP + 4	Relationship of transferor to transferee

(a) No. from Part I	(b) Purpose of gift	(c) Use of gift	(d) Description of how gift is held

(e) Transfer of gift: Transferee's name, address, and ZIP + 4	Relationship of transferor to transferee

SCHEDULE D (Form 990)

Department of the Treasury
Internal Revenue Service

Supplemental Financial Statements

► Complete if the organization answered 'Yes' on Form 990, Part IV, line 6, 7, 8, 9, 10, 11a, 11b, 11c, 11d, 11e, 11f, 12a, or 12b.
► Attach to Form 990.
► Go to *www.irs.gov/Form990* for instructions and the latest information.

OMB No. 1545-0047

2018

Open to Public Inspection

Name of the organization

OPPORTUNITY 180

Employer identification number

61-1753910

Part I Organizations Maintaining Donor Advised Funds or Other Similar Funds or Accounts.

Complete if the organization answered 'Yes' on Form 990, Part IV, line 6.

		(a) Donor advised funds	(b) Funds and other accounts
1	Total number at end of year		
2	Aggregate value of contributions to (during year)		
3	Aggregate value of grants from (during year)		
4	Aggregate value at end of year		

5 Did the organization inform all donors and donor advisors in writing that the assets held in donor advised funds are the organization's property, subject to the organization's exclusive legal control? ☐ Yes ☐ No

6 Did the organization inform all grantees, donors, and donor advisors in writing that grant funds can be used only for charitable purposes and not for the benefit of the donor or donor advisor, or for any other purpose conferring impermissible private benefit? ☐ Yes ☐ No

Part II Conservation Easements.

Complete if the organization answered 'Yes' on Form 990, Part IV, line 7.

1 Purpose(s) of conservation easements held by the organization (check all that apply).

☐ Preservation of land for public use (e.g., recreation or education)
☐ Protection of natural habitat
☐ Preservation of open space
☐ Preservation of a historically important land area
☐ Preservation of a certified historic structure

2 Complete lines 2a through 2d if the organization held a qualified conservation contribution in the form of a conservation easement on the last day of the tax year.

		Held at the End of the Tax Year
a Total number of conservation easements	2a	
b Total acreage restricted by conservation easements	2b	
c Number of conservation easements on a certified historic structure included in (a)	2c	
d Number of conservation easements included in (c) acquired after 7/25/06, and not on a historic structure listed in the National Register	2d	

3 Number of conservation easements modified, transferred, released, extinguished, or terminated by the organization during the tax year ►

4 Number of states where property subject to conservation easement is located ►

5 Does the organization have a written policy regarding the periodic monitoring, inspection, handling of violations, and enforcement of the conservation easements it holds? ☐ Yes ☐ No

6 Staff and volunteer hours devoted to monitoring, inspecting, handling of violations, and enforcing conservation easements during the year ►

7 Amount of expenses incurred in monitoring, inspecting, handling of violations, and enforcing conservation easements during the year ►$

8 Does each conservation easement reported on line 2(d) above satisfy the requirements of section 170(h)(4)(B)(i) and section 170(h)(4)(B)(ii)? ☐ Yes ☐ No

9 In Part XIII, describe how the organization reports conservation easements in its revenue and expense statement, and balance sheet, and include, if applicable, the text of the footnote to the organization's financial statements that describes the organization's accounting for conservation easements.

Part III Organizations Maintaining Collections of Art, Historical Treasures, or Other Similar Assets.

Complete if the organization answered 'Yes' on Form 990, Part IV, line 8.

1a If the organization elected, as permitted under SFAS 116 (ASC 958), not to report in its revenue statement and balance sheet works of art, historical treasures, or other similar assets held for public exhibition, education, or research in furtherance of public service, provide, in Part XIII, the text of the footnote to its financial statements that describes these items.

b If the organization elected, as permitted under SFAS 116 (ASC 958), to report in its revenue statement and balance sheet works of art, historical treasures, or other similar assets held for public exhibition, education, or research in furtherance of public service, provide the following amounts relating to these items:

(i) Revenue included on Form 990, Part VIII, line 1 ►$

(ii) Assets included in Form 990, Part X ►$

2 If the organization received or held works of art, historical treasures, or other similar assets for financial gain, provide the following amounts required to be reported under SFAS 116 (ASC 958) relating to these items:

a Revenue included on Form 990, Part VIII, line 1 ►$

b Assets included in Form 990, Part X ►$

Part III Organizations Maintaining Collections of Art, Historical Treasures, or Other Similar Assets *(continued)*

3 Using the organization's acquisition, accession, and other records, check any of the following that are a significant use of its collection items (check all that apply):

a ☐ Public exhibition
b ☐ Scholarly research
c ☐ Preservation for future generations
d ☐ Loan or exchange programs
e ☐ Other _____

4 Provide a description of the organization's collections and explain how they further the organization's exempt purpose in Part XIII.

5 During the year, did the organization solicit or receive donations of art, historical treasures, or other similar assets to be sold to raise funds rather than to be maintained as part of the organization's collection? ☐ Yes ☐ No

Part IV Escrow and Custodial Arrangements. Complete if the organization answered 'Yes' on Form 990, Part IV, line 9, or reported an amount on Form 990, Part X, line 21.

1a Is the organization an agent, trustee, custodian or other intermediary for contributions or other assets not included on Form 990, Part X? ☐ Yes ☐ No

b If 'Yes,' explain the arrangement in Part XIII and complete the following table:

		Amount
c Beginning balance	1c	
d Additions during the year	1d	
e Distributions during the year	1e	
f Ending balance	1f	

2a Did the organization include an amount on Form 990, Part X, line 21, for escrow or custodial account liability? ☐ Yes ☐ No

b If 'Yes,' explain the arrangement in Part XIII. Check here if the explanation has been provided on Part XIII ☐

Part V Endowment Funds. Complete if the organization answered 'Yes' on Form 990, Part IV, line 10.

	(a) Current year	(b) Prior year	(c) Two years back	(d) Three years back	(e) Four years back
1a Beginning of year balance					
b Contributions					
c Net investment earnings, gains, and losses					
d Grants or scholarships					
e Other expenditures for facilities and programs					
f Administrative expenses					
g End of year balance					

2 Provide the estimated percentage of the current year end balance (line 1g, column (a)) held as:

a Board designated or quasi-endowment ► _____ %
b Permanent endowment ► _____ %
c Temporarily restricted endowment ► _____ %

The percentages on lines 2a, 2b, and 2c should equal 100%.

3a Are there endowment funds not in the possession of the organization that are held and administered for the organization by:

		Yes	No
(i) unrelated organizations	3a(i)		
(ii) related organizations	3a(ii)		
b If 'Yes' on line 3a(ii), are the related organizations listed as required on Schedule R?	3b		

4 Describe in Part XIII the intended uses of the organization's endowment funds.

Part VI Land, Buildings, and Equipment.
Complete if the organization answered 'Yes' on Form 990, Part IV, line 11a. See Form 990, Part X, line 10.

Description of property	(a) Cost or other basis (investment)	(b) Cost or other basis (other)	(c) Accumulated depreciation	(d) Book value
1a Land				
b Buildings				
c Leasehold improvements				
d Equipment		4,323.	31.	4,292.
e Other		36,596.	28,594.	8,002.
Total. Add lines 1a through 1e. *(Column (d) must equal Form 990, Part X, column (B), line 10c.)* ►				12,294.

Part VII Investments – Other Securities. N/A
Complete if the organization answered 'Yes' on Form 990, Part IV, line 11b. See Form 990, Part X, line 12.

(a) Description of security or category (including name of security)	(b) Book value	(c) Method of valuation: Cost or end-of-year market value
(1) Financial derivatives		
(2) Closely-held equity interests		
(3) Other		
(A)		
(B)		
(C)		
(D)		
(E)		
(F)		
(G)		
(H)		
(I)		
Total. *(Column (b) must equal Form 990, Part X, column (B) line 12.)* ►		

Part VIII Investments – Program Related. N/A
Complete if the organization answered 'Yes' on Form 990, Part IV, line 11c. See Form 990, Part X, line 13.

(a) Description of investment	(b) Book value	(c) Method of valuation: Cost or end-of-year market value
(1)		
(2)		
(3)		
(4)		
(5)		
(6)		
(7)		
(8)		
(9)		
(10)		
Total. *(Column (b) must equal Form 990, Part X, column (B) line 13.)* ►		

Part IX Other Assets. N/A
Complete if the organization answered 'Yes' on Form 990, Part IV, line 11d. See Form 990, Part X, line 15.

(a) Description	(b) Book value
(1)	
(2)	
(3)	
(4)	
(5)	
(6)	
(7)	
(8)	
(9)	
(10)	
Total. *(Column (b) must equal Form 990, Part X, column (B) line 15.)* ►	

Part X Other Liabilities.
Complete if the organization answered 'Yes' on Form 990, Part IV, line 11e or 11f. See Form 990, Part X, line 25.

(a) Description of liability	(b) Book value
(1) Federal income taxes	
(2) PAYROLL LIABILITIES	43,184.
(3)	
(4)	
(5)	
(6)	
(7)	
(8)	
(9)	
(10)	
(11)	
Total. *(Column (b) must equal Form 990, Part X, column (B) line 25.)* ►	43,184.

2. Liability for uncertain tax positions. In Part XIII, provide the text of the footnote to the organization's financial statements that reports the organization's liability for uncertain tax positions under FIN 48 (ASC 740). Check here if the text of the footnote has been provided in Part XIII ☐

Part XI Reconciliation of Revenue per Audited Financial Statements With Revenue per Return.
Complete if the organization answered 'Yes' on Form 990, Part IV, line 12a.

1	Total revenue, gains, and other support per audited financial statements		1	9,650,989.
2	Amounts included on line 1 but not on Form 990, Part VIII, line 12:			
a	Net unrealized gains (losses) on investments	2a		
b	Donated services and use of facilities	2b		
c	Recoveries of prior year grants	2c		
d	Other (Describe in Part XIII.)	2d		
e	Add lines 2a through 2d		2e	
3	Subtract line 2e from line 1		3	9,650,989.
4	Amounts included on Form 990, Part VIII, line 12, but not on line 1:			
a	Investment expenses not included on Form 990, Part VIII, line 7b	4a		
b	Other (Describe in Part XIII.)	4b		
c	Add lines 4a and 4b		4c	
5	Total revenue. Add lines 3 and 4c. *(This must equal Form 990, Part I, line 12.)*		5	9,650,989.

Part XII Reconciliation of Expenses per Audited Financial Statements With Expenses per Return.
Complete if the organization answered 'Yes' on Form 990, Part IV, line 12a.

1	Total expenses and losses per audited financial statements		1	1,736,277.
2	Amounts included on line 1 but not on Form 990, Part IX, line 25:			
a	Donated services and use of facilities	2a		
b	Prior year adjustments	2b		
c	Other losses	2c		
d	Other (Describe in Part XIII.)	2d		
e	Add lines 2a through 2d		2e	
3	Subtract line 2e from line 1		3	1,736,277.
4	Amounts included on Form 990, Part IX, line 25, but not on line 1:			
a	Investment expenses not included on Form 990, Part VIII, line 7b	4a		
b	Other (Describe in Part XIII.)	4b		
c	Add lines 4a and 4b		4c	
5	Total expenses. Add lines 3 and 4c. *(This must equal Form 990, Part I, line 18.)*		5	1,736,277.

Part XIII Supplemental Information.

Provide the descriptions required for Part II, lines 3, 5, and 9; Part III, lines 1a and 4; Part IV, lines 1b and 2b; Part V, line 4; Part X, line 2; Part XI, lines 2d and 4b; and Part XII, lines 2d and 4b. Also complete this part to provide any additional information.

SCHEDULE I (Form 990)

Department of the Treasury
Internal Revenue Service

Grants and Other Assistance to Organizations, Governments, and Individuals in the United States

Complete if the organization answered 'Yes' on Form 990, Part IV, line 21 or 22.
► Attach to Form 990.
► Go to *www.irs.gov/Form990* for the latest information

OMB No. 1545-0047

2018

Open to Public Inspection

Name of the organization: OPPORTUNITY 180

Employer identification number: 61-1753910

Part I General Information on Grants and Assistance

1 Does the organization maintain records to substantiate the amount of the grants or assistance, the grantees' eligibility for the grants or assistance, and the selection criteria used to award the grants or assistance? ... [X] Yes [ ] No

2 Describe in Part IV the organization's procedures for monitoring the use of grant funds in the United States. SEE PART IV

Part II Grants and Other Assistance to Domestic Organizations and Domestic Governments.

Complete if the organization answered 'Yes' on Form 990, Part IV, line 21, for any recipient that received more than $5,000. Part II can be duplicated if additional space is needed.

1 (a) Name and address of organization or government	(b) EIN	(c) IRC section (if applicable)	(d) Amount of cash grant	(e) Amount of non-cash assistance	(f) Method of valuation (book, FMV, appraisal, other)	(g) Description of noncash assistance	(h) Purpose of grant or assistance
(1) DEMOCRACY PREP PUBLIC SCHOOLS 1767 PARK AVENUE, 3RD FLOOR NEW YORK, NY 10035	20-2629354	501(C)(3)	5,250.	0.			COMMUNITY ENGAGEMENT GRANT
(2) NEVADA PREPARATORY CHARTER 2550 E DESERT INN RD, #240 LAS VEGAS, NV 89121	32-0511761	501(C)(3)	21,250.	0.			FACILITY GRANT - FUTURE SCHOOLS
(3) NEVADA RISE ACADEMY CHARTER 1120 BLAKES FIELD PLACE HENDERSON, NV 89011	81-4539783	501(C)(3)	21,250.	0.			FACILITY GRANT - FUTURE SCHOOLS
(4) URBAN PREP ACADEMY 420 N WABASH, SUITE 300 CHICAGO, IL 60611	20-0138672	501(C)(3)	11,000.	0.			PLANNING GRANT
(5) EXPLORE ACADEMY FOUNDATION 5100 MASTHEAD ALBUQUERQUE, NM 87109	47-1720796	501(C)(3)	20,000.	0.			PLANNING GRANT
(6) CHIEFS FOR CHANGE 1455 PENNSYLVANIA AVE NW WASHINGTON, DC 20004	47-2373903	501(C)(3)	9,000.	0.			COMMUNITY INVOLVEMENT GRANT
(7)							
(8)							

2 Enter total number of section 501(c)(3) and government organizations listed in the line 1 table ... ► 6

3 Enter total number of other organizations listed in the line 1 table ... ► 0

Part III **Grants and Other Assistance to Domestic Individuals.** Complete if the organization answered 'Yes' on Form 990, Part IV, line 22. Part III can be duplicated if additional space is needed.

	(a) Type of grant or assistance	(b) Number of recipients	(c) Amount of cash grant	(d) Amount of noncash assistance	(e) Method of valuation (book, FMV, appraisal, other)	(f) Description of noncash assistance
1						
2						
3						
4						
5						
6						
7						

Part IV **Supplemental Information.** Provide the information required in Part I, line 2; Part III, column (b); and any other additional information.

PART I, LINE 2 - PROCEDURES FOR MONITORING USE OF GRANTS FUNDS IN U.S.

ALL GRANTED FUNDS REQUIRE ONGOING REPORTING TO ENSURE ACCOUNTABILITY. REPORTING FREQUENCY VARIES DEPENDENT ON THE NATURE OF THE GRANT AND FUNDING. OPPORTUNITY 180 WILL FOLLOW-UP WITH GRANT RECIPIENTS WHEN DEADLINES ARE APPROACHING. OPPORTUNITY 180 REVIEWS GRANT REPORTS TO MONITOR PROGRESS.

SCHEDULE O
(Form 990 or 990-EZ)

Department of the Treasury
Internal Revenue Service

Supplemental Information to Form 990 or 990-EZ

Complete to provide information for responses to specific questions on Form 990 or 990-EZ or to provide any additional information.
► Attach to Form 990 or 990-EZ.
► Go to *www.irs.gov/Form990* for the latest information.

OMB No. 1545-0047

2018

Open to Public Inspection

Name of the organization	Employer identification number
OPPORTUNITY 180	61-1753910

FORM 990, PART I, LINE 1 - ORGANIZATION MISSION OR SIGNIFICANT ACTIVITIES

WE BELIEVE THAT ALL CHILDREN DESERVE GREAT SCHOOLS. WE FIND IT UNACCEPTABLE THAT OVER 82,000 CHILDREN IN CLARK COUNTY ATTEND LOW-PERFORMING PUBLIC SCHOOLS AND ARE COMMITTED TO SOLVING THIS PROBLEM. AS A NONPROFIT ORGANIZATION, WE OFFER RESOURCES TO LAUNCH AND SUPPORT HIGH-PERFORMING SCHOOLS AND ORGANIZATIONS THAT WILL PROVIDE STUDENTS WITH OUTSTANDING EDUCATIONAL OPPORTUNITIES, AND HELP PROVE THAT EVERY CHILD CAN ACHIEVE, REGARDLESS OF ETHNICITY, ZIP CODE OR FAMILY INCOME.

FORM 990, PART III, LINE 1 - ORGANIZATION MISSION

WE BELIEVE THAT ALL CHILDREN DESERVE GREAT SCHOOLS. WE FIND IT UNACCEPTABLE THAT OVER 82,000 CHILDREN IN CLARK COUNTY ATTEND LOW-PERFORMING PUBLIC SCHOOLS AND ARE COMMITTED TO SOLVING THIS PROBLEM. AS A NONPROFIT ORGANIZATION, WE OFFER RESOURCES TO LAUNCH AND SUPPORT HIGH-PERFORMING SCHOOLS AND ORGANIZATIONS THAT WILL PROVIDE STUDENTS WITH OUTSTANDING EDUCATIONAL OPPORTUNITIES, AND HELP PROVE THAT EVERY CHILD CAN ACHIEVE, REGARDLESS OF ETHNICITY, ZIP CODE OR FAMILY INCOME.

FORM 990, PART VI, LINE 11B - FORM 990 REVIEW PROCESS

OPPORTUNITY 180 BOARD OF DIRECTORS WILL REVIEW THE PREPARED IRS FORM 990.

FORM 990, PART VI, LINE 15A - COMPENSATION REVIEW & APPROVAL PROCESS - CEO & TOP MANAGEMENT

THE BOARD OF DIRECTORS RETAINED AN OUTSIDE ORGANIZATION TO ANALYZE NONPROFIT SALARIES AND USED THE COMPENSATION ANALYSIS TO DETERMINE THE SALARY FOR THE CEO.

FORM 990, PART VI, LINE 19 - OTHER ORGANIZATION DOCUMENTS PUBLICLY AVAILABLE

NO OTHER DOCUMENTS AVAILABLE TO THE PUBLIC.

EXTENDED TO NOVEMBER 16, 2020

Form **990** (Rev. January 2020)

Department of the Treasury Internal Revenue Service

Return of Organization Exempt From Income Tax

Under section 501(c), 527, or 4947(a)(1) of the Internal Revenue Code (except private foundations)

▶ **Do not enter social security numbers on this form as it may be made public.**

▶ **Go to www.irs.gov/Form990 for instructions and the latest information.**

OMB No. 1545-0047

2019

Open to Public Inspection

A For the 2019 calendar year, or tax year beginning **and ending**

B Check if applicable:
- ☐ Address change
- ☐ Name change
- ☐ Initial return
- ☐ Final return/ terminated
- ☐ Amended return
- ☐ Application pending

C Name of organization: OPPORTUNITY 180

Doing business as:

Number and street (or P.O. box if mail is not delivered to street address): 11035 LAVENDER HILL DR STE 160-180

Room/suite:

City or town, state or province, country, and ZIP or foreign postal code: LAS VEGAS, NV 89135-2955

F Name and address of principal officer: JANA WILCOX LAVIN 11035 LAVENDER HILL DR STE 160-180, LAS VEGA

D Employer identification number: 61-1753910

E Telephone number: (702) 776-6086

G Gross receipts $: 61,120.

H(a) Is this a group return for subordinates? ☐ Yes ☒ No

H(b) Are all subordinates included? ☐ Yes ☐ No

If "No," attach a list. (see instructions)

H(c) Group exemption number ▶

I Tax-exempt status: ☒ 501(c)(3) ☐ 501(c) ( )◀ (insert no.) ☐ 4947(a)(1) or ☐ 527

J Website: ▶ OPPORTUNITY180.ORG

K Form of organization: ☒ Corporation ☐ Trust ☐ Association ☐ Other ▶

L Year of formation: 2014 **M** State of legal domicile: NV

Part I Summary

Activities & Governance

1 Briefly describe the organization's mission or most significant activities: TO PROVIDE STUDENTS WITH OUTSTANDING EDUCATIONAL OPPORTUNITIES

2 Check this box ▶ ☐ if the organization discontinued its operations or disposed of more than 25% of its net assets.

3	Number of voting members of the governing body (Part VI, line 1a)	3	4
4	Number of independent voting members of the governing body (Part VI, line 1b)	4	4
5	Total number of individuals employed in calendar year 2019 (Part V, line 2a)	5	10
6	Total number of volunteers (estimate if necessary)	6	4
7a	Total unrelated business revenue from Part VIII, column (C), line 12	7a	0.
b	Net unrelated business taxable income from Form 990-T, line 39	7b	0.

Revenue

		Prior Year	Current Year
8	Contributions and grants (Part VIII, line 1h)	9,650,989.	61,120.
9	Program service revenue (Part VIII, line 2g)	0.	0.
10	Investment income (Part VIII, column (A), lines 3, 4, and 7d)	0.	0.
11	Other revenue (Part VIII, column (A), lines 5, 6d, 8c, 9c, 10c, and 11e)	0.	0.
12	Total revenue - add lines 8 through 11 (must equal Part VIII, column (A), line 12)	9,650,989.	61,120.

Expenses

13	Grants and similar amounts paid (Part IX, column (A), lines 1-3)	92,835.	2,001,672.
14	Benefits paid to or for members (Part IX, column (A), line 4)	0.	0.
15	Salaries, other compensation, employee benefits (Part IX, column (A), lines 5-10)	484,061.	494,076.
16a	Professional fundraising fees (Part IX, column (A), line 11e)	0.	0.
b	Total fundraising expenses (Part IX, column (D), line 25) ▶ 123,711.		
17	Other expenses (Part IX, column (A), lines 11a-11d, 11f-24e)	1,159,381.	2,095,714.
18	Total expenses. Add lines 13-17 (must equal Part IX, column (A), line 25)	1,736,277.	4,591,462.
19	Revenue less expenses. Subtract line 18 from line 12	7,914,712.	-4,530,342.

Net Assets or Fund Balances

		Beginning of Current Year	End of Year
20	Total assets (Part X, line 16)	11,908,164.	8,369,345.
21	Total liabilities (Part X, line 26)	53,770.	1,045,293.
22	Net assets or fund balances. Subtract line 21 from line 20	11,854,394.	7,324,052.

Part II Signature Block

Under penalties of perjury, I declare that I have examined this return, including accompanying schedules and statements, and to the best of my knowledge and belief, it is true, correct, and complete. Declaration of preparer (other than officer) is based on all information of which preparer has any knowledge.

Sign Here

▶ Signature of officer — Date

▶ JANA WILCOX LAVIN, PRESIDENT & EXECUTIVE DIRECTOR
Type or print name and title

Paid Preparer Use Only

Print/Type preparer's name	Preparer's signature	Date	Check if self-employed	PTIN
BRADLEY K. WALLACE, CPA		11/10/20	☐	P01339113

Firm's name ▶ EIDE BAILLY LLP — Firm's EIN ▶ 45-0250958

Firm's address ▶ 9139 W. RUSSELL RD., STE. 200 LAS VEGAS, NV 89148-1250 — Phone no. 702-304-0405

May the IRS discuss this return with the preparer shown above? (see instructions) ☒ Yes ☐ No

Part III Statement of Program Service Accomplishments

Check if Schedule O contains a response or note to any line in this Part III X

1 Briefly describe the organization's mission:
WE BELIEVE THAT ALL CHILDREN DESERVE GREAT SCHOOLS. WE FIND IT UNACCEPTABLE THAT OVER 82,000 CHILDREN IN CLARK COUNTY ATTEND LOW-PERFORMING PUBLIC SCHOOLS AND ARE COMMITTED TO SOLVING THIS PROBLEM. AS A NONPROFIT ORGANIZATION, WE OFFER RESOURCES TO LAUNCH

2 Did the organization undertake any significant program services during the year which were not listed on the prior Form 990 or 990-EZ? ..... ☐ Yes ☒ No
If "Yes," describe these new services on Schedule O.

3 Did the organization cease conducting, or make significant changes in how it conducts, any program services? ..... ☐ Yes ☒ No
If "Yes," describe these changes on Schedule O.

4 Describe the organization's program service accomplishments for each of its three largest program services, as measured by expenses. Section 501(c)(3) and 501(c)(4) organizations are required to report the amount of grants and allocations to others, the total expenses, and revenue, if any, for each program service reported.

4a (Code:) (Expenses $ 4,124,318. including grants of $ 2,001,672.) (Revenue $)
OPPORTUNITY 180 PROVIDED SUPPORT TO SCHOOL ORGANIZATIONS RELATED TO THEIR MISSION AND EXPANSION FOR SCHOOLS INCLUDING NV PREP, NV RISE, DEMOCRACY PREP, ACE HIGH SCHOOL, EQUIPO ACADEMY, PHALEN LEADERSHIP ACADEMIES, PILOTED, ROOTED, URBAN PREP AND EXPLORE SCHOOLS. IN ADDITION OPPORTUNITY 180 PROVIDED LEADERSHIP DEVELOPMENT TO EDUCATORS THROUGH TEACH PLUS NEVADA, THE NEW TEACHER PROJECT, AND ACCELERATE INSTITUTE PARTNERSHIPS.

4b (Code:) (Expenses $ including grants of $) (Revenue $)

4c (Code:) (Expenses $ including grants of $) (Revenue $)

4d Other program services (Describe on Schedule O.)
(Expenses $ including grants of $) (Revenue $)

4e Total program service expenses ▶ 4,124,318.

Part IV Checklist of Required Schedules

			Yes	No
1	Is the organization described in section 501(c)(3) or 4947(a)(1) (other than a private foundation)? *If "Yes," complete Schedule A*	1	X	
2	Is the organization required to complete *Schedule B, Schedule of Contributors*?	2	X	
3	Did the organization engage in direct or indirect political campaign activities on behalf of or in opposition to candidates for public office? *If "Yes," complete Schedule C, Part I*	3		X
4	**Section 501(c)(3) organizations.** Did the organization engage in lobbying activities, or have a section 501(h) election in effect during the tax year? *If "Yes," complete Schedule C, Part II*	4	X	
5	Is the organization a section 501(c)(4), 501(c)(5), or 501(c)(6) organization that receives membership dues, assessments, or similar amounts as defined in Revenue Procedure 98-19? *If "Yes," complete Schedule C, Part III*	5		X
6	Did the organization maintain any donor advised funds or any similar funds or accounts for which donors have the right to provide advice on the distribution or investment of amounts in such funds or accounts? *If "Yes," complete Schedule D, Part I*	6		X
7	Did the organization receive or hold a conservation easement, including easements to preserve open space, the environment, historic land areas, or historic structures? *If "Yes," complete Schedule D, Part II*	7		X
8	Did the organization maintain collections of works of art, historical treasures, or other similar assets? *If "Yes," complete Schedule D, Part III*	8		X
9	Did the organization report an amount in Part X, line 21, for escrow or custodial account liability, serve as a custodian for amounts not listed in Part X; or provide credit counseling, debt management, credit repair, or debt negotiation services? *If "Yes," complete Schedule D, Part IV*	9		X
10	Did the organization, directly or through a related organization, hold assets in donor-restricted endowments or in quasi endowments? *If "Yes," complete Schedule D, Part V*	10		X
11	If the organization's answer to any of the following questions is "Yes," then complete Schedule D, Parts VI, VII, VIII, IX, or X as applicable.			
a	Did the organization report an amount for land, buildings, and equipment in Part X, line 10? *If "Yes," complete Schedule D, Part VI*	11a	X	
b	Did the organization report an amount for investments - other securities in Part X, line 12, that is 5% or more of its total assets reported in Part X, line 16? *If "Yes," complete Schedule D, Part VII*	11b		X
c	Did the organization report an amount for investments - program related in Part X, line 13, that is 5% or more of its total assets reported in Part X, line 16? *If "Yes," complete Schedule D, Part VIII*	11c		X
d	Did the organization report an amount for other assets in Part X, line 15, that is 5% or more of its total assets reported in Part X, line 16? *If "Yes," complete Schedule D, Part IX*	11d		X
e	Did the organization report an amount for other liabilities in Part X, line 25? *If "Yes," complete Schedule D, Part X*	11e	X	
f	Did the organization's separate or consolidated financial statements for the tax year include a footnote that addresses the organization's liability for uncertain tax positions under FIN 48 (ASC 740)? *If "Yes," complete Schedule D, Part X*	11f		X
12a	Did the organization obtain separate, independent audited financial statements for the tax year? *If "Yes," complete Schedule D, Parts XI and XII*	12a		X
b	Was the organization included in consolidated, independent audited financial statements for the tax year? *If "Yes," and if the organization answered "No" to line 12a, then completing Schedule D, Parts XI and XII is optional*	12b		X
13	Is the organization a school described in section 170(b)(1)(A)(ii)? *If "Yes," complete Schedule E*	13		X
14a	Did the organization maintain an office, employees, or agents outside of the United States?	14a		X
b	Did the organization have aggregate revenues or expenses of more than $10,000 from grantmaking, fundraising, business, investment, and program service activities outside the United States, or aggregate foreign investments valued at $100,000 or more? *If "Yes," complete Schedule F, Parts I and IV*	14b		X
15	Did the organization report on Part IX, column (A), line 3, more than $5,000 of grants or other assistance to or for any foreign organization? *If "Yes," complete Schedule F, Parts II and IV*	15		X
16	Did the organization report on Part IX, column (A), line 3, more than $5,000 of aggregate grants or other assistance to or for foreign individuals? *If "Yes," complete Schedule F, Parts III and IV*	16		X
17	Did the organization report a total of more than $15,000 of expenses for professional fundraising services on Part IX, column (A), lines 6 and 11e? *If "Yes," complete Schedule G, Part I*	17		X
18	Did the organization report more than $15,000 total of fundraising event gross income and contributions on Part VIII, lines 1c and 8a? *If "Yes," complete Schedule G, Part II*	18		X
19	Did the organization report more than $15,000 of gross income from gaming activities on Part VIII, line 9a? *If "Yes," complete Schedule G, Part III*	19		X
20a	Did the organization operate one or more hospital facilities? *If "Yes," complete Schedule H*	20a		X
b	If "Yes" to line 20a, did the organization attach a copy of its audited financial statements to this return?	20b		
21	Did the organization report more than $5,000 of grants or other assistance to any domestic organization or domestic government on Part IX, column (A), line 1? *If "Yes," complete Schedule I, Parts I and II*	21	X	

Part IV Checklist of Required Schedules *(continued)*

			Yes	No
22	Did the organization report more than $5,000 of grants or other assistance to or for domestic individuals on Part IX, column (A), line 2? *If "Yes," complete Schedule I, Parts I and III*	22		X
23	Did the organization answer "Yes" to Part VII, Section A, line 3, 4, or 5 about compensation of the organization's current and former officers, directors, trustees, key employees, and highest compensated employees? *If "Yes," complete Schedule J*	23		X
24a	Did the organization have a tax-exempt bond issue with an outstanding principal amount of more than $100,000 as of the last day of the year, that was issued after December 31, 2002? *If "Yes," answer lines 24b through 24d and complete Schedule K. If "No," go to line 25a*	24a		X
b	Did the organization invest any proceeds of tax-exempt bonds beyond a temporary period exception?	24b		
c	Did the organization maintain an escrow account other than a refunding escrow at any time during the year to defease any tax-exempt bonds?	24c		
d	Did the organization act as an "on behalf of" issuer for bonds outstanding at any time during the year?	24d		
25a	**Section 501(c)(3), 501(c)(4), and 501(c)(29) organizations.** Did the organization engage in an excess benefit transaction with a disqualified person during the year? *If "Yes," complete Schedule L, Part I*	25a		X
b	Is the organization aware that it engaged in an excess benefit transaction with a disqualified person in a prior year, and that the transaction has not been reported on any of the organization's prior Forms 990 or 990-EZ? *If "Yes," complete Schedule L, Part I*	25b		X
26	Did the organization report any amount on Part X, line 5 or 22, for receivables from or payables to any current or former officer, director, trustee, key employee, creator or founder, substantial contributor, or 35% controlled entity or family member of any of these persons? *If "Yes," complete Schedule L, Part II*	26		X
27	Did the organization provide a grant or other assistance to any current or former officer, director, trustee, key employee, creator or founder, substantial contributor or employee thereof, a grant selection committee member, or to a 35% controlled entity (including an employee thereof) or family member of any of these persons? *If "Yes," complete Schedule L, Part III*	27		X
28	Was the organization a party to a business transaction with one of the following parties (see Schedule L, Part IV instructions, for applicable filing thresholds, conditions, and exceptions):			
a	A current or former officer, director, trustee, key employee, creator or founder, or substantial contributor? *If "Yes," complete Schedule L, Part IV*	28a		X
b	A family member of any individual described in line 28a? *If "Yes," complete Schedule L, Part IV*	28b		X
c	A 35% controlled entity of one or more individuals and/or organizations described in lines 28a or 28b? *If "Yes," complete Schedule L, Part IV*	28c		X
29	Did the organization receive more than $25,000 in non-cash contributions? *If "Yes," complete Schedule M*	29	X	
30	Did the organization receive contributions of art, historical treasures, or other similar assets, or qualified conservation contributions? *If "Yes," complete Schedule M*	30		X
31	Did the organization liquidate, terminate, or dissolve and cease operations? *If "Yes," complete Schedule N, Part I*	31		X
32	Did the organization sell, exchange, dispose of, or transfer more than 25% of its net assets? *If "Yes," complete Schedule N, Part II*	32		X
33	Did the organization own 100% of an entity disregarded as separate from the organization under Regulations sections 301.7701-2 and 301.7701-3? *If "Yes," complete Schedule R, Part I*	33		X
34	Was the organization related to any tax-exempt or taxable entity? *If "Yes," complete Schedule R, Part II, III, or IV, and Part V, line 1*	34		X
35a	Did the organization have a controlled entity within the meaning of section 512(b)(13)?	35a		X
b	If "Yes" to line 35a, did the organization receive any payment from or engage in any transaction with a controlled entity within the meaning of section 512(b)(13)? *If "Yes," complete Schedule R, Part V, line 2*	35b		
36	**Section 501(c)(3) organizations.** Did the organization make any transfers to an exempt non-charitable related organization? *If "Yes," complete Schedule R, Part V, line 2*	36		X
37	Did the organization conduct more than 5% of its activities through an entity that is not a related organization and that is treated as a partnership for federal income tax purposes? *If "Yes," complete Schedule R, Part VI*	37		X
38	Did the organization complete Schedule O and provide explanations in Schedule O for Part VI, lines 11b and 19? **Note:** All Form 990 filers are required to complete Schedule O	38	X	

Part V Statements Regarding Other IRS Filings and Tax Compliance

Check if Schedule O contains a response or note to any line in this Part V ☐

				Yes	No
1a	Enter the number reported in Box 3 of Form 1096. Enter -0- if not applicable	1a	16		
b	Enter the number of Forms W-2G included in line 1a. Enter -0- if not applicable	1b	0		
c	Did the organization comply with backup withholding rules for reportable payments to vendors and reportable gaming (gambling) winnings to prize winners?			1c X	

Part V Statements Regarding Other IRS Filings and Tax Compliance *(continued)*

			Yes	No
2a	Enter the number of employees reported on Form W-3, Transmittal of Wage and Tax Statements, filed for the calendar year ending with or within the year covered by this return **2a** 10			
b	If at least one is reported on line 2a, did the organization file all required federal employment tax returns?	**2b**	X	
	Note: If the sum of lines 1a and 2a is greater than 250, you may be required to *e-file* (see instructions)			
3a	Did the organization have unrelated business gross income of $1,000 or more during the year?	**3a**		X
b	If "Yes," has it filed a Form 990-T for this year? *If "No" to line 3b, provide an explanation on Schedule O*	**3b**		
4a	At any time during the calendar year, did the organization have an interest in, or a signature or other authority over, a financial account in a foreign country (such as a bank account, securities account, or other financial account)?	**4a**		X
b	If "Yes," enter the name of the foreign country ▶ _____ See instructions for filing requirements for FinCEN Form 114, Report of Foreign Bank and Financial Accounts (FBAR).			
5a	Was the organization a party to a prohibited tax shelter transaction at any time during the tax year?	**5a**		X
b	Did any taxable party notify the organization that it was or is a party to a prohibited tax shelter transaction?	**5b**		X
c	If "Yes" to line 5a or 5b, did the organization file Form 8886-T?	**5c**		
6a	Does the organization have annual gross receipts that are normally greater than $100,000, and did the organization solicit any contributions that were not tax deductible as charitable contributions?	**6a**		X
b	If "Yes," did the organization include with every solicitation an express statement that such contributions or gifts were not tax deductible?	**6b**		
7	**Organizations that may receive deductible contributions under section 170(c).**			
a	Did the organization receive a payment in excess of $75 made partly as a contribution and partly for goods and services provided to the payor?	**7a**		X
b	If "Yes," did the organization notify the donor of the value of the goods or services provided?	**7b**		
c	Did the organization sell, exchange, or otherwise dispose of tangible personal property for which it was required to file Form 8282?	**7c**		X
d	If "Yes," indicate the number of Forms 8282 filed during the year **7d**			
e	Did the organization receive any funds, directly or indirectly, to pay premiums on a personal benefit contract?	**7e**		X
f	Did the organization, during the year, pay premiums, directly or indirectly, on a personal benefit contract?	**7f**		X
g	If the organization received a contribution of qualified intellectual property, did the organization file Form 8899 as required?	**7g**		
h	If the organization received a contribution of cars, boats, airplanes, or other vehicles, did the organization file a Form 1098-C?	**7h**		
8	**Sponsoring organizations maintaining donor advised funds.** Did a donor advised fund maintained by the sponsoring organization have excess business holdings at any time during the year?	**8**		
9	**Sponsoring organizations maintaining donor advised funds.**			
a	Did the sponsoring organization make any taxable distributions under section 4966?	**9a**		
b	Did the sponsoring organization make a distribution to a donor, donor advisor, or related person?	**9b**		
10	**Section 501(c)(7) organizations.** Enter:			
a	Initiation fees and capital contributions included on Part VIII, line 12 **10a**			
b	Gross receipts, included on Form 990, Part VIII, line 12, for public use of club facilities **10b**			
11	**Section 501(c)(12) organizations.** Enter:			
a	Gross income from members or shareholders **11a**			
b	Gross income from other sources (Do not net amounts due or paid to other sources against amounts due or received from them.) **11b**			
12a	**Section 4947(a)(1) non-exempt charitable trusts.** Is the organization filing Form 990 in lieu of Form 1041?	**12a**		
b	If "Yes," enter the amount of tax-exempt interest received or accrued during the year **12b**			
13	**Section 501(c)(29) qualified nonprofit health insurance issuers.**			
a	Is the organization licensed to issue qualified health plans in more than one state? **Note:** See the instructions for additional information the organization must report on Schedule O.	**13a**		
b	Enter the amount of reserves the organization is required to maintain by the states in which the organization is licensed to issue qualified health plans **13b**			
c	Enter the amount of reserves on hand **13c**			
14a	Did the organization receive any payments for indoor tanning services during the tax year?	**14a**		X
b	If "Yes," has it filed a Form 720 to report these payments? *If "No," provide an explanation on Schedule O*	**14b**		
15	Is the organization subject to the section 4960 tax on payment(s) of more than $1,000,000 in remuneration or excess parachute payment(s) during the year? If "Yes," see instructions and file Form 4720, Schedule N.	**15**		X
16	Is the organization an educational institution subject to the section 4968 excise tax on net investment income? If "Yes," complete Form 4720, Schedule O.	**16**		X

Part VI Governance, Management, and Disclosure *For each "Yes" response to lines 2 through 7b below, and for a "No" response to line 8a, 8b, or 10b below, describe the circumstances, processes, or changes on Schedule O. See instructions.*

Check if Schedule O contains a response or note to any line in this Part VI X

Section A. Governing Body and Management

				Yes	No
1a	Enter the number of voting members of the governing body at the end of the tax year	1a	4		
	If there are material differences in voting rights among members of the governing body, or if the governing body delegated broad authority to an executive committee or similar committee, explain on Schedule O.				
b	Enter the number of voting members included on line 1a, above, who are independent	1b	4		
2	Did any officer, director, trustee, or key employee have a family relationship or a business relationship with any other officer, director, trustee, or key employee?	2			X
3	Did the organization delegate control over management duties customarily performed by or under the direct supervision of officers, directors, trustees, or key employees to a management company or other person?	3			X
4	Did the organization make any significant changes to its governing documents since the prior Form 990 was filed?	4			X
5	Did the organization become aware during the year of a significant diversion of the organization's assets?	5			X
6	Did the organization have members or stockholders?	6			X
7a	Did the organization have members, stockholders, or other persons who had the power to elect or appoint one or more members of the governing body?	7a			X
b	Are any governance decisions of the organization reserved to (or subject to approval by) members, stockholders, or persons other than the governing body?	7b			X
8	Did the organization contemporaneously document the meetings held or written actions undertaken during the year by the following:				
a	The governing body?	8a		X	
b	Each committee with authority to act on behalf of the governing body?	8b			X
9	Is there any officer, director, trustee, or key employee listed in Part VII, Section A, who cannot be reached at the organization's mailing address? *If "Yes," provide the names and addresses on Schedule O*	9			X

Section B. Policies *(This Section B requests information about policies not required by the Internal Revenue Code.)*

			Yes	No
10a	Did the organization have local chapters, branches, or affiliates?	10a		X
b	If "Yes," did the organization have written policies and procedures governing the activities of such chapters, affiliates, and branches to ensure their operations are consistent with the organization's exempt purposes?	10b		
11a	Has the organization provided a complete copy of this Form 990 to all members of its governing body before filing the form?	11a	X	
b	Describe in Schedule O the process, if any, used by the organization to review this Form 990.			
12a	Did the organization have a written conflict of interest policy? *If "No," go to line 13*	12a	X	
b	Were officers, directors, or trustees, and key employees required to disclose annually interests that could give rise to conflicts?	12b	X	
c	Did the organization regularly and consistently monitor and enforce compliance with the policy? *If "Yes," describe in Schedule O how this was done*	12c		X
13	Did the organization have a written whistleblower policy?	13	X	
14	Did the organization have a written document retention and destruction policy?	14	X	
15	Did the process for determining compensation of the following persons include a review and approval by independent persons, comparability data, and contemporaneous substantiation of the deliberation and decision?			
a	The organization's CEO, Executive Director, or top management official	15a	X	
b	Other officers or key employees of the organization	15b		X
	If "Yes" to line 15a or 15b, describe the process in Schedule O (see instructions).			
16a	Did the organization invest in, contribute assets to, or participate in a joint venture or similar arrangement with a taxable entity during the year?	16a		X
b	If "Yes," did the organization follow a written policy or procedure requiring the organization to evaluate its participation in joint venture arrangements under applicable federal tax law, and take steps to safeguard the organization's exempt status with respect to such arrangements?	16b		

Section C. Disclosure

17 List the states with which a copy of this Form 990 is required to be filed ▶ NONE

18 Section 6104 requires an organization to make its Forms 1023 (1024 or 1024-A, if applicable), 990, and 990-T (Section 501(c)(3)s only) available for public inspection. Indicate how you made these available. Check all that apply.

☐ Own website ☐ Another's website ☒ Upon request ☐ Other *(explain on Schedule O)*

19 Describe on Schedule O whether (and if so, how) the organization made its governing documents, conflict of interest policy, and financial statements available to the public during the tax year.

20 State the name, address, and telephone number of the person who possesses the organization's books and records ▶

EIDE BAILLY LLP - (702) 304-0405
9139 W RUSSELL RD STE. 200, LAS VEGAS, NV 89148

Part VII Compensation of Officers, Directors, Trustees, Key Employees, Highest Compensated Employees, and Independent Contractors

Check if Schedule O contains a response or note to any line in this Part VII ☐

Section A. Officers, Directors, Trustees, Key Employees, and Highest Compensated Employees

1a Complete this table for all persons required to be listed. Report compensation for the calendar year ending with or within the organization's tax year.

- List all of the organization's **current** officers, directors, trustees (whether individuals or organizations), regardless of amount of compensation. Enter -0- in columns (D), (E), and (F) if no compensation was paid.
- List all of the organization's **current** key employees, if any. See instructions for definition of "key employee."
- List the organization's five **current** highest compensated employees (other than an officer, director, trustee, or key employee) who received reportable compensation (Box 5 of Form W-2 and/or Box 7 of Form 1099-MISC) of more than $100,000 from the organization and any related organizations.
- List all of the organization's **former** officers, key employees, and highest compensated employees who received more than $100,000 of reportable compensation from the organization and any related organizations.
- List all of the organization's **former directors or trustees** that received, in the capacity as a former director or trustee of the organization, more than $10,000 of reportable compensation from the organization and any related organizations.

See instructions for the order in which to list the persons above.

☐ Check this box if neither the organization nor any related organization compensated any current officer, director, or trustee.

(A) Name and title	(B) Average hours per week (list any hours for related organizations below line)	(C) Position (do not check more than one box, unless person is both an officer and a director/trustee)						(D) Reportable compensation from the organization (W-2/1099-MISC)	(E) Reportable compensation from related organizations (W-2/1099-MISC)	(F) Estimated amount of other compensation from the organization and related organizations
		Individual trustee or director	Institutional trustee	Officer	Key employee	Highest compensated employee	Former			
(1) FRANCISCO AGUILAR	2.00									
TREASURER		X		X				0.	0.	0.
(2) MILES DICKSON	2.00									
BOARD CHAIR & SECRETARY		X		X				0.	0.	0.
(3) NIKO CENTENO-MONROY	2.00									
DIRECTOR		X						0.	0.	0.
(4) MONICA MORADKHAN	2.00									
DIRECTOR		X						0.	0.	0.
(5) JANA WILCOX LAVIN	40.00									
PRESIDENT & EXECUTIVE DIRECTOR				X				145,860.	0.	0.

Part VII **Section A. Officers, Directors, Trustees, Key Employees, and Highest Compensated Employees** *(continued)*

(A) Name and title	(B) Average hours per week (list any hours for related organizations below line)	(C) Position (do not check more than one box, unless person is both an officer and a director/trustee)						(D) Reportable compensation from the organization (W-2/1099-MISC)	(E) Reportable compensation from related organizations (W-2/1099-MISC)	(F) Estimated amount of other compensation from the organization and related organizations
		Individual trustee or director	Institutional trustee	Officer	Key employee	Highest compensated employee	Former			
1b Subtotal ▶								145,860.	0.	0.
c Total from continuation sheets to Part VII, Section A ▶								0.	0.	0.
d Total (add lines 1b and 1c) ▶								145,860.	0.	0.

2 Total number of individuals (including but not limited to those listed above) who received more than $100,000 of reportable compensation from the organization ▶ 1

		Yes	No
3	Did the organization list any **former** officer, director, trustee, key employee, or highest compensated employee on line 1a? *If "Yes," complete Schedule J for such individual*		X
4	For any individual listed on line 1a, is the sum of reportable compensation and other compensation from the organization and related organizations greater than $150,000? *If "Yes," complete Schedule J for such individual*		X
5	Did any person listed on line 1a receive or accrue compensation from any unrelated organization or individual for services rendered to the organization? *If "Yes," complete Schedule J for such person*		X

Section B. Independent Contractors

1 Complete this table for your five highest compensated independent contractors that received more than $100,000 of compensation from the organization. Report compensation for the calendar year ending with or within the organization's tax year.

(A) Name and business address	(B) Description of services	(C) Compensation
NONE		

2 Total number of independent contractors (including but not limited to those listed above) who received more than $100,000 of compensation from the organization ▶ 0

Part VIII Statement of Revenue

Check if Schedule O contains a response or note to any line in this Part VIII ☐

			(A) Total revenue	(B) Related or exempt function revenue	(C) Unrelated business revenue	(D) Revenue excluded from tax under sections 512 - 514
Contributions, Gifts, Grants and Other Similar Amounts	1a Federated campaigns	1a				
	b Membership dues	1b				
	c Fundraising events	1c				
	d Related organizations	1d				
	e Government grants (contributions)	1e	61,120.			
	f All other contributions, gifts, grants, and similar amounts not included above	1f				
	g Noncash contributions included in lines 1a-1f	1g $	61,120.			
	h **Total.** Add lines 1a-1f	▶	61,120.			
Program Service Revenue		Business Code				
	2a					
	b					
	c					
	d					
	e					
	f All other program service revenue					
	g **Total.** Add lines 2a-2f	▶				
Other Revenue	3 Investment income (including dividends, interest, and other similar amounts)	▶				
	4 Income from investment of tax-exempt bond proceeds	▶				
	5 Royalties	▶				
		(i) Real	(ii) Personal			
	6a Gross rents 6a					
	b Less: rental expenses 6b					
	c Rental income or (loss) 6c					
	d Net rental income or (loss)	▶				
		(i) Securities	(ii) Other			
	7a Gross amount from sales of assets other than inventory 7a					
	b Less: cost or other basis and sales expenses 7b					
	c Gain or (loss) 7c					
	d Net gain or (loss)	▶				
	8a Gross income from fundraising events (not including $ _____ of contributions reported on line 1c). See Part IV, line 18 8a					
	b Less: direct expenses 8b					
	c Net income or (loss) from fundraising events	▶				
	9a Gross income from gaming activities. See Part IV, line 19 9a					
	b Less: direct expenses 9b					
	c Net income or (loss) from gaming activities	▶				
	10a Gross sales of inventory, less returns and allowances 10a					
	b Less: cost of goods sold 10b					
	c Net income or (loss) from sales of inventory	▶				
Miscellaneous Revenue		Business Code				
	11a					
	b					
	c					
	d All other revenue					
	e **Total.** Add lines 11a-11d	▶				
	12 **Total revenue.** See instructions	▶	61,120.	0.	0.	0.

Part IX Statement of Functional Expenses

Section 501(c)(3) and 501(c)(4) organizations must complete all columns. All other organizations must complete column (A).

Check if Schedule O contains a response or note to any line in this Part IX ☐

Do not include amounts reported on lines 6b, 7b, 8b, 9b, and 10b of Part VIII.	(A) Total expenses	(B) Program service expenses	(C) Management and general expenses	(D) Fundraising expenses
1 Grants and other assistance to domestic organizations and domestic governments. See Part IV, line 21	2,001,672.	2,001,672.		
2 Grants and other assistance to domestic individuals. See Part IV, line 22				
3 Grants and other assistance to foreign organizations, foreign governments, and foreign individuals. See Part IV, lines 15 and 16				
4 Benefits paid to or for members				
5 Compensation of current officers, directors, trustees, and key employees	145,860.		145,860.	
6 Compensation not included above to disqualified persons (as defined under section 4958(f)(1)) and persons described in section 4958(c)(3)(B)				
7 Other salaries and wages	245,597.	174,750.	12,685.	58,162.
8 Pension plan accruals and contributions (include section 401(k) and 403(b) employer contributions)				
9 Other employee benefits	51,019.	23,652.	19,495.	7,872.
10 Payroll taxes	51,600.	23,921.	19,717.	7,962.
11 Fees for services (nonemployees):				
a Management				
b Legal				
c Accounting				
d Lobbying	14,322.	14,322.		
e Professional fundraising services. See Part IV, line 17				
f Investment management fees				
g Other. (If line 11g amount exceeds 10% of line 25, column (A) amount, list line 11g expenses on Sch O.)				
12 Advertising and promotion	22,566.		22,566.	
13 Office expenses	17,728.	8,219.	6,773.	2,736.
14 Information technology				
15 Royalties				
16 Occupancy	26,324.	12,203.	10,059.	4,062.
17 Travel	33,614.	15,583.	12,844.	5,187.
18 Payments of travel or entertainment expenses for any federal, state, or local public officials				
19 Conferences, conventions, and meetings				
20 Interest				
21 Payments to affiliates				
22 Depreciation, depletion, and amortization	8,802.	4,081.	3,363.	1,358.
23 Insurance	11,754.	5,449.	4,491.	1,814.
24 Other expenses. Itemize expenses not covered above (List miscellaneous expenses on line 24e. If line 24e amount exceeds 10% of line 25, column (A) amount, list line 24e expenses on Schedule O.)				
a COMMUNITY OUTREACH	1,733,689.	1,733,689.		
b CONSULTING	143,598.	66,570.	54,871.	22,157.
c PROFESSIONAL SERVICES	57,250.	26,540.	21,876.	8,834.
d DUES AND SUBCRIPTIONS	12,786.	5,927.	4,886.	1,973.
e All other expenses	13,281.	7,740.	3,947.	1,594.
25 **Total functional expenses.** Add lines 1 through 24e	4,591,462.	4,124,318.	343,433.	123,711.
26 **Joint costs.** Complete this line only if the organization reported in column (B) joint costs from a combined educational campaign and fundraising solicitation. Check here ▶ ☐ if following SOP 98-2 (ASC 958-720)				

Part X Balance Sheet

Check if Schedule O contains a response or note to any line in this Part X ☐

				(A) Beginning of year		(B) End of year
Assets	1	Cash - non-interest-bearing		10,893,643.	1	8,299,256.
	2	Savings and temporary cash investments			2	
	3	Pledges and grants receivable, net		1,000,000.	3	0.
	4	Accounts receivable, net			4	
	5	Loans and other receivables from any current or former officer, director, trustee, key employee, creator or founder, substantial contributor, or 35% controlled entity or family member of any of these persons			5	
	6	Loans and other receivables from other disqualified persons (as defined under section 4958(f)(1)), and persons described in section 4958(c)(3)(B)			6	
	7	Notes and loans receivable, net			7	
	8	Inventories for sale or use			8	
	9	Prepaid expenses and deferred charges		977.	9	0.
	10a	Land, buildings, and equipment: cost or other basis. Complete Part VI of Schedule D	10a 45,146.			
	b	Less: accumulated depreciation	10b 37,427.	12,294.	10c	7,719.
	11	Investments - publicly traded securities			11	
	12	Investments - other securities. See Part IV, line 11			12	
	13	Investments - program-related. See Part IV, line 11			13	
	14	Intangible assets		0.	14	0.
	15	Other assets. See Part IV, line 11		1,250.	15	62,370.
	16	**Total assets.** Add lines 1 through 15 (must equal line 33)		11,908,164.	16	8,369,345.
Liabilities	17	Accounts payable and accrued expenses		10,586.	17	176,905.
	18	Grants payable			18	855,000.
	19	Deferred revenue			19	
	20	Tax-exempt bond liabilities			20	
	21	Escrow or custodial account liability. Complete Part IV of Schedule D			21	
	22	Loans and other payables to any current or former officer, director, trustee, key employee, creator or founder, substantial contributor, or 35% controlled entity or family member of any of these persons			22	
	23	Secured mortgages and notes payable to unrelated third parties			23	
	24	Unsecured notes and loans payable to unrelated third parties			24	
	25	Other liabilities (including federal income tax, payables to related third parties, and other liabilities not included on lines 17-24). Complete Part X of Schedule D		43,184.	25	13,388.
	26	**Total liabilities.** Add lines 17 through 25		53,770.	26	1,045,293.
Net Assets or Fund Balances		**Organizations that follow FASB ASC 958, check here ▶ ☒ and complete lines 27, 28, 32, and 33.**				
	27	Net assets without donor restrictions		1,795,434.	27	433,935.
	28	Net assets with donor restrictions		10,058,960.	28	6,890,117.
		Organizations that do not follow FASB ASC 958, check here ▶ ☐ and complete lines 29 through 33.				
	29	Capital stock or trust principal, or current funds			29	
	30	Paid-in or capital surplus, or land, building, or equipment fund			30	
	31	Retained earnings, endowment, accumulated income, or other funds			31	
	32	Total net assets or fund balances		11,854,394.	32	7,324,052.
	33	Total liabilities and net assets/fund balances		11,908,164.	33	8,369,345.

Form **990** (2019)

Part XI Reconciliation of Net Assets

Check if Schedule O contains a response or note to any line in this Part XI ☐

1	Total revenue (must equal Part VIII, column (A), line 12)	1	61,120.
2	Total expenses (must equal Part IX, column (A), line 25)	2	4,591,462.
3	Revenue less expenses. Subtract line 2 from line 1	3	-4,530,342.
4	Net assets or fund balances at beginning of year (must equal Part X, line 32, column (A))	4	11,854,394.
5	Net unrealized gains (losses) on investments	5	
6	Donated services and use of facilities	6	
7	Investment expenses	7	
8	Prior period adjustments	8	
9	Other changes in net assets or fund balances (explain on Schedule O)	9	0.
10	Net assets or fund balances at end of year. Combine lines 3 through 9 (must equal Part X, line 32, column (B))	10	7,324,052.

Part XII Financial Statements and Reporting

Check if Schedule O contains a response or note to any line in this Part XII ☐

			Yes	No
1	Accounting method used to prepare the Form 990: ☐ Cash ☒ Accrual ☐ Other _____ If the organization changed its method of accounting from a prior year or checked "Other," explain in Schedule O.			
2a	Were the organization's financial statements compiled or reviewed by an independent accountant? If "Yes," check a box below to indicate whether the financial statements for the year were compiled or reviewed on a separate basis, consolidated basis, or both: ☐ Separate basis ☐ Consolidated basis ☐ Both consolidated and separate basis	2a		X
b	Were the organization's financial statements audited by an independent accountant? If "Yes," check a box below to indicate whether the financial statements for the year were audited on a separate basis, consolidated basis, or both: ☐ Separate basis ☐ Consolidated basis ☐ Both consolidated and separate basis	2b		X
c	If "Yes" to line 2a or 2b, does the organization have a committee that assumes responsibility for oversight of the audit, review, or compilation of its financial statements and selection of an independent accountant? If the organization changed either its oversight process or selection process during the tax year, explain on Schedule O.	2c		
3a	As a result of a federal award, was the organization required to undergo an audit or audits as set forth in the Single Audit Act and OMB Circular A-133?	3a		X
b	If "Yes," did the organization undergo the required audit or audits? If the organization did not undergo the required audit or audits, explain why on Schedule O and describe any steps taken to undergo such audits	3b		

SCHEDULE A
(Form 990 or 990-EZ)

Department of the Treasury
Internal Revenue Service

Public Charity Status and Public Support

Complete if the organization is a section 501(c)(3) organization or a section 4947(a)(1) nonexempt charitable trust.
▶ Attach to Form 990 or Form 990-EZ.
▶ Go to www.irs.gov/Form990 for instructions and the latest information.

OMB No. 1545-0047

2019

Open to Public Inspection

Name of the organization
OPPORTUNITY 180

Employer identification number
61-1753910

Part I Reason for Public Charity Status (All organizations must complete this part.) See instructions.

The organization is not a private foundation because it is: (For lines 1 through 12, check only one box.)

1 ☐ A church, convention of churches, or association of churches described in **section 170(b)(1)(A)(i).**
2 ☐ A school described in **section 170(b)(1)(A)(ii).** (Attach Schedule E (Form 990 or 990-EZ).)
3 ☐ A hospital or a cooperative hospital service organization described in **section 170(b)(1)(A)(iii).**
4 ☐ A medical research organization operated in conjunction with a hospital described in **section 170(b)(1)(A)(iii).** Enter the hospital's name, city, and state: _____
5 ☐ An organization operated for the benefit of a college or university owned or operated by a governmental unit described in **section 170(b)(1)(A)(iv).** (Complete Part II.)
6 ☐ A federal, state, or local government or governmental unit described in **section 170(b)(1)(A)(v).**
7 ☒ An organization that normally receives a substantial part of its support from a governmental unit or from the general public described in **section 170(b)(1)(A)(vi).** (Complete Part II.)
8 ☐ A community trust described in **section 170(b)(1)(A)(vi).** (Complete Part II.)
9 ☐ An agricultural research organization described in **section 170(b)(1)(A)(ix)** operated in conjunction with a land-grant college or university or a non-land-grant college of agriculture (see instructions). Enter the name, city, and state of the college or university: _____
10 ☐ An organization that normally receives: (1) more than 33 1/3% of its support from contributions, membership fees, and gross receipts from activities related to its exempt functions - subject to certain exceptions, and (2) no more than 33 1/3% of its support from gross investment income and unrelated business taxable income (less section 511 tax) from businesses acquired by the organization after June 30, 1975. See **section 509(a)(2).** (Complete Part III.)
11 ☐ An organization organized and operated exclusively to test for public safety. See **section 509(a)(4).**
12 ☐ An organization organized and operated exclusively for the benefit of, to perform the functions of, or to carry out the purposes of one or more publicly supported organizations described in **section 509(a)(1)** or **section 509(a)(2)**. See **section 509(a)(3).** Check the box in lines 12a through 12d that describes the type of supporting organization and complete lines 12e, 12f, and 12g.

a ☐ **Type I.** A supporting organization operated, supervised, or controlled by its supported organization(s), typically by giving the supported organization(s) the power to regularly appoint or elect a majority of the directors or trustees of the supporting organization. **You must complete Part IV, Sections A and B.**
b ☐ **Type II.** A supporting organization supervised or controlled in connection with its supported organization(s), by having control or management of the supporting organization vested in the same persons that control or manage the supported organization(s). **You must complete Part IV, Sections A and C.**
c ☐ **Type III functionally integrated.** A supporting organization operated in connection with, and functionally integrated with, its supported organization(s) (see instructions). **You must complete Part IV, Sections A, D, and E.**
d ☐ **Type III non-functionally integrated.** A supporting organization operated in connection with its supported organization(s) that is not functionally integrated. The organization generally must satisfy a distribution requirement and an attentiveness requirement (see instructions). **You must complete Part IV, Sections A and D, and Part V.**
e ☐ Check this box if the organization received a written determination from the IRS that it is a Type I, Type II, Type III functionally integrated, or Type III non-functionally integrated supporting organization.
f Enter the number of supported organizations .....
g Provide the following information about the supported organization(s).

(i) Name of supported organization	(ii) EIN	(iii) Type of organization (described on lines 1-10 above (see instructions))	(iv) Is the organization listed in your governing document? Yes	(iv) No	(v) Amount of monetary support (see instructions)	(vi) Amount of other support (see instructions)
Total						

Part II Support Schedule for Organizations Described in Sections 170(b)(1)(A)(iv) and 170(b)(1)(A)(vi)

(Complete only if you checked the box on line 5, 7, or 8 of Part I or if the organization failed to qualify under Part III. If the organization fails to qualify under the tests listed below, please complete Part III.)

Section A. Public Support

Calendar year (or fiscal year beginning in) ▶	(a) 2015	(b) 2016	(c) 2017	(d) 2018	(e) 2019	(f) Total
1 Gifts, grants, contributions, and membership fees received. (Do not include any "unusual grants.")	4100000.	8224110.	236,650.	9694516.	62,681.	22317957.
2 Tax revenues levied for the organization's benefit and either paid to or expended on its behalf						
3 The value of services or facilities furnished by a governmental unit to the organization without charge						
4 **Total.** Add lines 1 through 3	4100000.	8224110.	236,650.	9694516.	62,681.	22317957.
5 The portion of total contributions by each person (other than a governmental unit or publicly supported organization) included on line 1 that exceeds 2% of the amount shown on line 11, column (f)						5160923.
6 **Public support.** Subtract line 5 from line 4.						17157034.

Section B. Total Support

Calendar year (or fiscal year beginning in) ▶	(a) 2015	(b) 2016	(c) 2017	(d) 2018	(e) 2019	(f) Total
7 Amounts from line 4	4100000.	8224110.	236,650.	9694516.	62,681.	22317957.
8 Gross income from interest, dividends, payments received on securities loans, rents, royalties, and income from similar sources						
9 Net income from unrelated business activities, whether or not the business is regularly carried on						
10 Other income. Do not include gain or loss from the sale of capital assets (Explain in Part VI.)						
11 **Total support.** Add lines 7 through 10						22317957.

12 Gross receipts from related activities, etc. (see instructions) 12

13 **First five years.** If the Form 990 is for the organization's first, second, third, fourth, or fifth tax year as a section 501(c)(3) organization, check this box and **stop here** ..... ▶ ☐

Section C. Computation of Public Support Percentage

14 Public support percentage for 2019 (line 6, column (f) divided by line 11, column (f)) ..... 14 76.88 %

15 Public support percentage from 2018 Schedule A, Part II, line 14 ..... 15 %

16a **33 1/3% support test - 2019.** If the organization did not check the box on line 13, and line 14 is 33 1/3% or more, check this box and **stop here.** The organization qualifies as a publicly supported organization ..... ▶ ☒

b **33 1/3% support test - 2018.** If the organization did not check a box on line 13 or 16a, and line 15 is 33 1/3% or more, check this box and **stop here.** The organization qualifies as a publicly supported organization ..... ▶ ☐

17a **10% -facts-and-circumstances test - 2019.** If the organization did not check a box on line 13, 16a, or 16b, and line 14 is 10% or more, and if the organization meets the "facts-and-circumstances" test, check this box and **stop here.** Explain in Part VI how the organization meets the "facts-and-circumstances" test. The organization qualifies as a publicly supported organization ..... ▶ ☐

b **10% -facts-and-circumstances test - 2018.** If the organization did not check a box on line 13, 16a, 16b, or 17a, and line 15 is 10% or more, and if the organization meets the "facts-and-circumstances" test, check this box and **stop here.** Explain in Part VI how the organization meets the "facts-and-circumstances" test. The organization qualifies as a publicly supported organization ..... ▶ ☐

18 **Private foundation.** If the organization did not check a box on line 13, 16a, 16b, 17a, or 17b, check this box and see instructions ..... ▶ ☐

Part III Support Schedule for Organizations Described in Section 509(a)(2)

(Complete only if you checked the box on line 10 of Part I or if the organization failed to qualify under Part II. If the organization fails to qualify under the tests listed below, please complete Part II.)

Section A. Public Support

Calendar year (or fiscal year beginning in) ▶	(a) 2015	(b) 2016	(c) 2017	(d) 2018	(e) 2019	(f) Total
1 Gifts, grants, contributions, and membership fees received. (Do not include any "unusual grants.")						
2 Gross receipts from admissions, merchandise sold or services performed, or facilities furnished in any activity that is related to the organization's tax-exempt purpose						
3 Gross receipts from activities that are not an unrelated trade or business under section 513						
4 Tax revenues levied for the organization's benefit and either paid to or expended on its behalf						
5 The value of services or facilities furnished by a governmental unit to the organization without charge						
6 **Total.** Add lines 1 through 5						
7a Amounts included on lines 1, 2, and 3 received from disqualified persons						
b Amounts included on lines 2 and 3 received from other than disqualified persons that exceed the greater of $5,000 or 1% of the amount on line 13 for the year						
c Add lines 7a and 7b						
8 **Public support.** (Subtract line 7c from line 6.)						

Section B. Total Support

Calendar year (or fiscal year beginning in) ▶	(a) 2015	(b) 2016	(c) 2017	(d) 2018	(e) 2019	(f) Total
9 Amounts from line 6						
10a Gross income from interest, dividends, payments received on securities loans, rents, royalties, and income from similar sources						
b Unrelated business taxable income (less section 511 taxes) from businesses acquired after June 30, 1975						
c Add lines 10a and 10b						
11 Net income from unrelated business activities not included in line 10b, whether or not the business is regularly carried on						
12 Other income. Do not include gain or loss from the sale of capital assets (Explain in Part VI.)						
13 **Total support.** (Add lines 9, 10c, 11, and 12.)						

14 **First five years.** If the Form 990 is for the organization's first, second, third, fourth, or fifth tax year as a section 501(c)(3) organization, check this box and **stop here** ▶ ☐

Section C. Computation of Public Support Percentage

15 Public support percentage for 2019 (line 8, column (f), divided by line 13, column (f))	15	%
16 Public support percentage from 2018 Schedule A, Part III, line 15	16	%

Section D. Computation of Investment Income Percentage

17 Investment income percentage for **2019** (line 10c, column (f), divided by line 13, column (f))	17	%
18 Investment income percentage from **2018** Schedule A, Part III, line 17	18	%

19a **33 1/3% support tests - 2019.** If the organization did not check the box on line 14, and line 15 is more than 33 1/3%, and line 17 is not more than 33 1/3%, check this box and **stop here.** The organization qualifies as a publicly supported organization ▶ ☐

b **33 1/3% support tests - 2018.** If the organization did not check a box on line 14 or line 19a, and line 16 is more than 33 1/3%, and line 18 is not more than 33 1/3%, check this box and **stop here.** The organization qualifies as a publicly supported organization ▶ ☐

20 **Private foundation.** If the organization did not check a box on line 14, 19a, or 19b, check this box and see instructions ▶ ☐

Part IV Supporting Organizations

(Complete only if you checked a box in line 12 on Part I. If you checked 12a of Part I, complete Sections A and B. If you checked 12b of Part I, complete Sections A and C. If you checked 12c of Part I, complete Sections A, D, and E. If you checked 12d of Part I, complete Sections A and D, and complete Part V.)

Section A. All Supporting Organizations

			Yes	No
1	Are all of the organization's supported organizations listed by name in the organization's governing documents? *If "No," describe in* **Part VI** *how the supported organizations are designated. If designated by class or purpose, describe the designation. If historic and continuing relationship, explain.*	1		
2	Did the organization have any supported organization that does not have an IRS determination of status under section 509(a)(1) or (2)? *If "Yes," explain in* **Part VI** *how the organization determined that the supported organization was described in section 509(a)(1) or (2).*	2		
3a	Did the organization have a supported organization described in section 501(c)(4), (5), or (6)? *If "Yes," answer (b) and (c) below.*	3a		
b	Did the organization confirm that each supported organization qualified under section 501(c)(4), (5), or (6) and satisfied the public support tests under section 509(a)(2)? *If "Yes," describe in* **Part VI** *when and how the organization made the determination.*	3b		
c	Did the organization ensure that all support to such organizations was used exclusively for section 170(c)(2)(B) purposes? *If "Yes," explain in* **Part VI** *what controls the organization put in place to ensure such use.*	3c		
4a	Was any supported organization not organized in the United States ("foreign supported organization")? *If "Yes," and if you checked 12a or 12b in Part I, answer (b) and (c) below.*	4a		
b	Did the organization have ultimate control and discretion in deciding whether to make grants to the foreign supported organization? *If "Yes," describe in* **Part VI** *how the organization had such control and discretion despite being controlled or supervised by or in connection with its supported organizations.*	4b		
c	Did the organization support any foreign supported organization that does not have an IRS determination under sections 501(c)(3) and 509(a)(1) or (2)? *If "Yes," explain in* **Part VI** *what controls the organization used to ensure that all support to the foreign supported organization was used exclusively for section 170(c)(2)(B) purposes.*	4c		
5a	Did the organization add, substitute, or remove any supported organizations during the tax year? *If "Yes," answer (b) and (c) below (if applicable). Also, provide detail in* **Part VI,** *including (i) the names and EIN numbers of the supported organizations added, substituted, or removed; (ii) the reasons for each such action; (iii) the authority under the organization's organizing document authorizing such action; and (iv) how the action was accomplished (such as by amendment to the organizing document).*	5a		
b	**Type I or Type II only.** Was any added or substituted supported organization part of a class already designated in the organization's organizing document?	5b		
c	**Substitutions only.** Was the substitution the result of an event beyond the organization's control?	5c		
6	Did the organization provide support (whether in the form of grants or the provision of services or facilities) to anyone other than (i) its supported organizations, (ii) individuals that are part of the charitable class benefited by one or more of its supported organizations, or (iii) other supporting organizations that also support or benefit one or more of the filing organization's supported organizations? *If "Yes," provide detail in* **Part VI.**	6		
7	Did the organization provide a grant, loan, compensation, or other similar payment to a substantial contributor (as defined in section 4958(c)(3)(C)), a family member of a substantial contributor, or a 35% controlled entity with regard to a substantial contributor? *If "Yes," complete Part I of Schedule L (Form 990 or 990-EZ).*	7		
8	Did the organization make a loan to a disqualified person (as defined in section 4958) not described in line 7? *If "Yes," complete Part I of Schedule L (Form 990 or 990-EZ).*	8		
9a	Was the organization controlled directly or indirectly at any time during the tax year by one or more disqualified persons as defined in section 4946 (other than foundation managers and organizations described in section 509(a)(1) or (2))? *If "Yes," provide detail in* **Part VI.**	9a		
b	Did one or more disqualified persons (as defined in line 9a) hold a controlling interest in any entity in which the supporting organization had an interest? *If "Yes," provide detail in* **Part VI.**	9b		
c	Did a disqualified person (as defined in line 9a) have an ownership interest in, or derive any personal benefit from, assets in which the supporting organization also had an interest? *If "Yes," provide detail in* **Part VI.**	9c		
10a	Was the organization subject to the excess business holdings rules of section 4943 because of section 4943(f) (regarding certain Type II supporting organizations, and all Type III non-functionally integrated supporting organizations)? *If "Yes," answer 10b below.*	10a		
b	Did the organization have any excess business holdings in the tax year? *(Use Schedule C, Form 4720, to determine whether the organization had excess business holdings.)*	10b		

Part IV Supporting Organizations *(continued)*

			Yes	No
11	Has the organization accepted a gift or contribution from any of the following persons?			
a	A person who directly or indirectly controls, either alone or together with persons described in (b) and (c) below, the governing body of a supported organization?	11a		
b	A family member of a person described in (a) above?	11b		
c	A 35% controlled entity of a person described in (a) or (b) above? *If "Yes" to a, b, or c, provide detail in* **Part VI.**	11c		

Section B. Type I Supporting Organizations

			Yes	No
1	Did the directors, trustees, or membership of one or more supported organizations have the power to regularly appoint or elect at least a majority of the organization's directors or trustees at all times during the tax year? *If "No," describe in* **Part VI** *how the supported organization(s) effectively operated, supervised, or controlled the organization's activities. If the organization had more than one supported organization, describe how the powers to appoint and/or remove directors or trustees were allocated among the supported organizations and what conditions or restrictions, if any, applied to such powers during the tax year.*	1		
2	Did the organization operate for the benefit of any supported organization other than the supported organization(s) that operated, supervised, or controlled the supporting organization? *If "Yes," explain in* **Part VI** *how providing such benefit carried out the purposes of the supported organization(s) that operated, supervised, or controlled the supporting organization.*	2		

Section C. Type II Supporting Organizations

			Yes	No
1	Were a majority of the organization's directors or trustees during the tax year also a majority of the directors or trustees of each of the organization's supported organization(s)? *If "No," describe in* **Part VI** *how control or management of the supporting organization was vested in the same persons that controlled or managed the supported organization(s).*	1		

Section D. All Type III Supporting Organizations

			Yes	No
1	Did the organization provide to each of its supported organizations, by the last day of the fifth month of the organization's tax year, (i) a written notice describing the type and amount of support provided during the prior tax year, (ii) a copy of the Form 990 that was most recently filed as of the date of notification, and (iii) copies of the organization's governing documents in effect on the date of notification, to the extent not previously provided?	1		
2	Were any of the organization's officers, directors, or trustees either (i) appointed or elected by the supported organization(s) or (ii) serving on the governing body of a supported organization? *If "No," explain in* **Part VI** *how the organization maintained a close and continuous working relationship with the supported organization(s).*	2		
3	By reason of the relationship described in (2), did the organization's supported organizations have a significant voice in the organization's investment policies and in directing the use of the organization's income or assets at all times during the tax year? *If "Yes," describe in* **Part VI** *the role the organization's supported organizations played in this regard.*	3		

Section E. Type III Functionally Integrated Supporting Organizations

1 *Check the box next to the method that the organization used to satisfy the Integral Part Test during the year* **(see instructions).**

a ☐ The organization satisfied the Activities Test. *Complete* **line 2** *below.*

b ☐ The organization is the parent of each of its supported organizations. *Complete* **line 3** *below.*

c ☐ The organization supported a governmental entity. *Describe in* **Part VI** *how you supported a government entity (see instructions).*

			Yes	No
2	Activities Test. **Answer (a) and (b) below.**			
a	Did substantially all of the organization's activities during the tax year directly further the exempt purposes of the supported organization(s) to which the organization was responsive? *If "Yes," then in* **Part VI identify those supported organizations and explain** *how these activities directly furthered their exempt purposes, how the organization was responsive to those supported organizations, and how the organization determined that these activities constituted substantially all of its activities.*	2a		
b	Did the activities described in (a) constitute activities that, but for the organization's involvement, one or more of the organization's supported organization(s) would have been engaged in? *If "Yes," explain in* **Part VI** *the reasons for the organization's position that its supported organization(s) would have engaged in these activities but for the organization's involvement.*	2b		
3	Parent of Supported Organizations. **Answer (a) and (b) below.**			
a	Did the organization have the power to regularly appoint or elect a majority of the officers, directors, or trustees of each of the supported organizations? *Provide details in* **Part VI.**	3a		
b	Did the organization exercise a substantial degree of direction over the policies, programs, and activities of each of its supported organizations? *If "Yes," describe in* **Part VI** *the role played by the organization in this regard.*	3b		

Part V Type III Non-Functionally Integrated 509(a)(3) Supporting Organizations

1 ☐ Check here if the organization satisfied the Integral Part Test as a qualifying trust on Nov. 20, 1970 (explain in Part VI). **See instructions.** All other Type III non-functionally integrated supporting organizations must complete Sections A through E.

Section A - Adjusted Net Income		(A) Prior Year	(B) Current Year (optional)
1 Net short-term capital gain	**1**		
2 Recoveries of prior-year distributions	**2**		
3 Other gross income (see instructions)	**3**		
4 Add lines 1 through 3.	**4**		
5 Depreciation and depletion	**5**		
6 Portion of operating expenses paid or incurred for production or collection of gross income or for management, conservation, or maintenance of property held for production of income (see instructions)	**6**		
7 Other expenses (see instructions)	**7**		
8 **Adjusted Net Income** (subtract lines 5, 6, and 7 from line 4)	**8**		

Section B - Minimum Asset Amount		(A) Prior Year	(B) Current Year (optional)
1 Aggregate fair market value of all non-exempt-use assets (see instructions for short tax year or assets held for part of year):			
a Average monthly value of securities	**1a**		
b Average monthly cash balances	**1b**		
c Fair market value of other non-exempt-use assets	**1c**		
d **Total** (add lines 1a, 1b, and 1c)	**1d**		
e **Discount** claimed for blockage or other factors (explain in detail in **Part VI**):			
2 Acquisition indebtedness applicable to non-exempt-use assets	**2**		
3 Subtract line 2 from line 1d.	**3**		
4 Cash deemed held for exempt use. Enter 1-1/2% of line 3 (for greater amount, see instructions).	**4**		
5 Net value of non-exempt-use assets (subtract line 4 from line 3)	**5**		
6 Multiply line 5 by .035.	**6**		
7 Recoveries of prior-year distributions	**7**		
8 **Minimum Asset Amount** (add line 7 to line 6)	**8**		

Section C - Distributable Amount			Current Year
1 Adjusted net income for prior year (from Section A, line 8, Column A)	**1**		
2 Enter 85% of line 1.	**2**		
3 Minimum asset amount for prior year (from Section B, line 8, Column A)	**3**		
4 Enter greater of line 2 or line 3.	**4**		
5 Income tax imposed in prior year	**5**		
6 **Distributable Amount.** Subtract line 5 from line 4, unless subject to emergency temporary reduction (see instructions).	**6**		

7 ☐ Check here if the current year is the organization's first as a non-functionally integrated Type III supporting organization (see instructions).

Part V **Type III Non-Functionally Integrated 509(a)(3) Supporting Organizations** *(continued)*

Section D - Distributions		Current Year
1	Amounts paid to supported organizations to accomplish exempt purposes	
2	Amounts paid to perform activity that directly furthers exempt purposes of supported organizations, in excess of income from activity	
3	Administrative expenses paid to accomplish exempt purposes of supported organizations	
4	Amounts paid to acquire exempt-use assets	
5	Qualified set-aside amounts (prior IRS approval required)	
6	Other distributions (describe in **Part VI**). See instructions.	
7	**Total annual distributions.** Add lines 1 through 6.	
8	Distributions to attentive supported organizations to which the organization is responsive (provide details in **Part VI**). See instructions.	
9	Distributable amount for 2019 from Section C, line 6	
10	Line 8 amount divided by line 9 amount	

Section E - Distribution Allocations (see instructions)		(i) Excess Distributions	(ii) Underdistributions Pre-2019	(iii) Distributable Amount for 2019
1	Distributable amount for 2019 from Section C, line 6			
2	Underdistributions, if any, for years prior to 2019 (reasonable cause required- explain in **Part VI**). See instructions.			
3	Excess distributions carryover, if any, to 2019			
a	From 2014			
b	From 2015			
c	From 2016			
d	From 2017			
e	From 2018			
f	**Total** of lines 3a through e			
g	Applied to underdistributions of prior years			
h	Applied to 2019 distributable amount			
i	Carryover from 2014 not applied (see instructions)			
j	Remainder. Subtract lines 3g, 3h, and 3i from 3f.			
4	Distributions for 2019 from Section D, line 7: $			
a	Applied to underdistributions of prior years			
b	Applied to 2019 distributable amount			
c	Remainder. Subtract lines 4a and 4b from 4.			
5	Remaining underdistributions for years prior to 2019, if any. Subtract lines 3g and 4a from line 2. For result greater than zero, explain in **Part VI.** See instructions.			
6	Remaining underdistributions for 2019. Subtract lines 3h and 4b from line 1. For result greater than zero, explain in **Part VI**. See instructions.			
7	**Excess distributions carryover to 2020.** Add lines 3j and 4c.			
8	Breakdown of line 7:			
a	Excess from 2015			
b	Excess from 2016			
c	Excess from 2017			
d	Excess from 2018			
e	Excess from 2019			

Part VI **Supplemental Information.** Provide the explanations required by Part II, line 10; Part II, line 17a or 17b; Part III, line 12; Part IV, Section A, lines 1, 2, 3b, 3c, 4b, 4c, 5a, 6, 9a, 9b, 9c, 11a, 11b, and 11c; Part IV, Section B, lines 1 and 2; Part IV, Section C, line 1; Part IV, Section D, lines 2 and 3; Part IV, Section E, lines 1c, 2a, 2b, 3a, and 3b; Part V, line 1; Part V, Section B, line 1e; Part V, Section D, lines 5, 6, and 8; and Part V, Section E, lines 2, 5, and 6. Also complete this part for any additional information. (See instructions.)

Schedule B
(Form 990, 990-EZ, or 990-PF)
Department of the Treasury
Internal Revenue Service

Schedule of Contributors

▶ **Attach to Form 990, Form 990-EZ, or Form 990-PF.**
▶ **Go to www.irs.gov/Form990 for the latest information.**

OMB No. 1545-0047

2019

Name of the organization

OPPORTUNITY 180

Employer identification number

61-1753910

Organization type (check one):

Filers of:	**Section:**
Form 990 or 990-EZ	☒ 501(c)(3) (enter number) organization
	☐ 4947(a)(1) nonexempt charitable trust **not** treated as a private foundation
	☐ 527 political organization
Form 990-PF	☐ 501(c)(3) exempt private foundation
	☐ 4947(a)(1) nonexempt charitable trust treated as a private foundation
	☐ 501(c)(3) taxable private foundation

Check if your organization is covered by the **General Rule** or a **Special Rule.**
Note: Only a section 501(c)(7), (8), or (10) organization can check boxes for both the General Rule and a Special Rule. See instructions.

General Rule

☐ For an organization filing Form 990, 990-EZ, or 990-PF that received, during the year, contributions totaling $5,000 or more (in money or property) from any one contributor. Complete Parts I and II. See instructions for determining a contributor's total contributions.

Special Rules

☒ For an organization described in section 501(c)(3) filing Form 990 or 990-EZ that met the 33 1/3% support test of the regulations under sections 509(a)(1) and 170(b)(1)(A)(vi), that checked Schedule A (Form 990 or 990-EZ), Part II, line 13, 16a, or 16b, and that received from any one contributor, during the year, total contributions of the greater of **(1)** $5,000; or **(2)** 2% of the amount on (i) Form 990, Part VIII, line 1h; or (ii) Form 990-EZ, line 1. Complete Parts I and II.

☐ For an organization described in section 501(c)(7), (8), or (10) filing Form 990 or 990-EZ that received from any one contributor, during the year, total contributions of more than $1,000 *exclusively* for religious, charitable, scientific, literary, or educational purposes, or for the prevention of cruelty to children or animals. Complete Parts I, II, and III.

☐ For an organization described in section 501(c)(7), (8), or (10) filing Form 990 or 990-EZ that received from any one contributor, during the year, contributions *exclusively* for religious, charitable, etc., purposes, but no such contributions totaled more than $1,000. If this box is checked, enter here the total contributions that were received during the year for an *exclusively* religious, charitable, etc., purpose. Don't complete any of the parts unless the **General Rule** applies to this organization because it received *nonexclusively* religious, charitable, etc., contributions totaling $5,000 or more during the year ..... ▶ $ _____

Caution: An organization that isn't covered by the General Rule and/or the Special Rules doesn't file Schedule B (Form 990, 990-EZ, or 990-PF), but it **must** answer "No" on Part IV, line 2, of its Form 990; or check the box on line H of its Form 990-EZ or on its Form 990-PF, Part I, line 2, to certify that it doesn't meet the filing requirements of Schedule B (Form 990, 990-EZ, or 990-PF).

Name of organization

OPPORTUNITY 180

Employer identification number

61-1753910

Part I **Contributors** (see instructions). Use duplicate copies of Part I if additional space is needed.

(a) No.	(b) Name, address, and ZIP + 4	(c) Total contributions	(d) Type of contribution
1	REGIONAL TRANSPORTATION COMMISSION OF SOUTHERN NEVADA 600 S GRAND CENTRAL PKWY, SUITE 350 LAS VEGAS, NV 89106	$ 61,120.	Person ☐ Payroll ☐ Noncash ☒ (Complete Part II for noncash contributions.)
		$	Person ☐ Payroll ☐ Noncash ☐ (Complete Part II for noncash contributions.)
		$	Person ☐ Payroll ☐ Noncash ☐ (Complete Part II for noncash contributions.)
		$	Person ☐ Payroll ☐ Noncash ☐ (Complete Part II for noncash contributions.)
		$	Person ☐ Payroll ☐ Noncash ☐ (Complete Part II for noncash contributions.)
		$	Person ☐ Payroll ☐ Noncash ☐ (Complete Part II for noncash contributions.)

Name of organization

OPPORTUNITY 180

Employer identification number

61-1753910

Part II **Noncash Property** (see instructions). Use duplicate copies of Part II if additional space is needed.

(a) No. from Part I	(b) Description of noncash property given	(c) FMV (or estimate) (See instructions.)	(d) Date received
1	VEHICLES	$ 61,120.	08/26/19
		$	
		$	
		$	
		$	
		$	
		$	

Name of organization

OPPORTUNITY 180

Employer identification number

61-1753910

Part III **Exclusively religious, charitable, etc., contributions to organizations described in section 501(c)(7), (8), or (10) that total more than $1,000 for the year from any one contributor.** Complete columns **(a)** through **(e) and** the following line entry. For organizations completing Part III, enter the total of exclusively religious, charitable, etc., contributions of **$1,000 or less** for the year. (Enter this info. once.) ▶ $

Use duplicate copies of Part III if additional space is needed.

(a) No. from Part I	(b) Purpose of gift	(c) Use of gift	(d) Description of how gift is held

(e) Transfer of gift

Transferee's name, address, and ZIP + 4	Relationship of transferor to transferee

(a) No. from Part I	(b) Purpose of gift	(c) Use of gift	(d) Description of how gift is held

(e) Transfer of gift

Transferee's name, address, and ZIP + 4	Relationship of transferor to transferee

(a) No. from Part I	(b) Purpose of gift	(c) Use of gift	(d) Description of how gift is held

(e) Transfer of gift

Transferee's name, address, and ZIP + 4	Relationship of transferor to transferee

(a) No. from Part I	(b) Purpose of gift	(c) Use of gift	(d) Description of how gift is held

(e) Transfer of gift

Transferee's name, address, and ZIP + 4	Relationship of transferor to transferee

SCHEDULE C
(Form 990 or 990-EZ)

Department of the Treasury
Internal Revenue Service

Political Campaign and Lobbying Activities

For Organizations Exempt From Income Tax Under section 501(c) and section 527

▶ **Complete if the organization is described below.** ▶ **Attach to Form 990 or Form 990-EZ.**

▶ **Go to www.irs.gov/Form990 for instructions and the latest information.**

OMB No. 1545-0047

2019

Open to Public Inspection

If the organization answered "Yes," on Form 990, Part IV, line 3, or Form 990-EZ, Part V, line 46 (Political Campaign Activities), then

- Section 501(c)(3) organizations: Complete Parts I-A and B. Do not complete Part I-C.
- Section 501(c) (other than section 501(c)(3)) organizations: Complete Parts I-A and C below. Do not complete Part I-B.
- Section 527 organizations: Complete Part I-A only.

If the organization answered "Yes," on Form 990, Part IV, line 4, or Form 990-EZ, Part VI, line 47 (Lobbying Activities), then

- Section 501(c)(3) organizations that have filed Form 5768 (election under section 501(h)): Complete Part II-A. Do not complete Part II-B.
- Section 501(c)(3) organizations that have NOT filed Form 5768 (election under section 501(h)): Complete Part II-B. Do not complete Part II-A.

If the organization answered "Yes," on Form 990, Part IV, line 5 (Proxy Tax) (see separate instructions) or Form 990-EZ, Part V, line 35c (Proxy Tax) (see separate instructions), then

- Section 501(c)(4), (5), or (6) organizations: Complete Part III.

Name of organization	Employer identification number
OPPORTUNITY 180	61-1753910

Part I-A Complete if the organization is exempt under section 501(c) or is a section 527 organization.

1 Provide a description of the organization's direct and indirect political campaign activities in Part IV.

2 Political campaign activity expenditures ▶ $

3 Volunteer hours for political campaign activities

Part I-B Complete if the organization is exempt under section 501(c)(3).

1 Enter the amount of any excise tax incurred by the organization under section 4955 ▶ $

2 Enter the amount of any excise tax incurred by organization managers under section 4955 ▶ $

3 If the organization incurred a section 4955 tax, did it file Form 4720 for this year? ☐ Yes ☐ No

4a Was a correction made? ☐ Yes ☐ No

b If "Yes," describe in Part IV.

Part I-C Complete if the organization is exempt under section 501(c), except section 501(c)(3).

1 Enter the amount directly expended by the filing organization for section 527 exempt function activities ▶ $

2 Enter the amount of the filing organization's funds contributed to other organizations for section 527 exempt function activities ▶ $

3 Total exempt function expenditures. Add lines 1 and 2. Enter here and on Form 1120-POL, line 17b ▶ $

4 Did the filing organization file **Form 1120-POL** for this year? ☐ Yes ☐ No

5 Enter the names, addresses and employer identification number (EIN) of all section 527 political organizations to which the filing organization made payments. For each organization listed, enter the amount paid from the filing organization's funds. Also enter the amount of political contributions received that were promptly and directly delivered to a separate political organization, such as a separate segregated fund or a political action committee (PAC). If additional space is needed, provide information in Part IV.

(a) Name	**(b)** Address	**(c)** EIN	**(d)** Amount paid from filing organization's funds. If none, enter -0-.	**(e)** Amount of political contributions received and promptly and directly delivered to a separate political organization. If none, enter -0-.

Part II-A **Complete if the organization is exempt under section 501(c)(3) and filed Form 5768 (election under section 501(h)).**

A Check ▶ ☐ if the filing organization belongs to an affiliated group (and list in Part IV each affiliated group member's name, address, EIN, expenses, and share of excess lobbying expenditures).

B Check ▶ ☐ if the filing organization checked box A and "limited control" provisions apply.

Limits on Lobbying Expenditures (The term "expenditures" means amounts paid or incurred.)	(a) Filing organization's totals	(b) Affiliated group totals
1a Total lobbying expenditures to influence public opinion (grassroots lobbying)		
b Total lobbying expenditures to influence a legislative body (direct lobbying)		
c Total lobbying expenditures (add lines 1a and 1b)		
d Other exempt purpose expenditures		
e Total exempt purpose expenditures (add lines 1c and 1d)		
f Lobbying nontaxable amount. Enter the amount from the following table in both columns.		
g Grassroots nontaxable amount (enter 25% of line 1f)		
h Subtract line 1g from line 1a. If zero or less, enter -0-		
i Subtract line 1f from line 1c. If zero or less, enter -0-		

If the amount on line 1e, column (a) or (b) is:	The lobbying nontaxable amount is:
Not over $500,000	20% of the amount on line 1e.
Over $500,000 but not over $1,000,000	$100,000 plus 15% of the excess over $500,000.
Over $1,000,000 but not over $1,500,000	$175,000 plus 10% of the excess over $1,000,000.
Over $1,500,000 but not over $17,000,000	$225,000 plus 5% of the excess over $1,500,000.
Over $17,000,000	$1,000,000.

j If there is an amount other than zero on either line 1h or line 1i, did the organization file Form 4720 reporting section 4911 tax for this year? ☐ **Yes** ☐ **No**

4-Year Averaging Period Under Section 501(h)

(Some organizations that made a section 501(h) election do not have to complete all of the five columns below. See the separate instructions for lines 2a through 2f.)

Lobbying Expenditures During 4-Year Averaging Period

Calendar year (or fiscal year beginning in)	(a) 2016	(b) 2017	(c) 2018	(d) 2019	(e) Total
2a Lobbying nontaxable amount					
b Lobbying ceiling amount (150% of line 2a, column(e))					
c Total lobbying expenditures					
d Grassroots nontaxable amount					
e Grassroots ceiling amount (150% of line 2d, column (e))					
f Grassroots lobbying expenditures					

Part II-B **Complete if the organization is exempt under section 501(c)(3) and has NOT filed Form 5768 (election under section 501(h)).**

For each "Yes" response on lines 1a through 1i below, provide in Part IV a detailed description of the lobbying activity.	(a) Yes	(a) No	(b) Amount
1 During the year, did the filing organization attempt to influence foreign, national, state, or local legislation, including any attempt to influence public opinion on a legislative matter or referendum, through the use of:			
a Volunteers?	X		
b Paid staff or management (include compensation in expenses reported on lines 1c through 1i)?	X		
c Media advertisements?		X	
d Mailings to members, legislators, or the public?		X	
e Publications, or published or broadcast statements?		X	
f Grants to other organizations for lobbying purposes?		X	
g Direct contact with legislators, their staffs, government officials, or a legislative body?	X		14,322.
h Rallies, demonstrations, seminars, conventions, speeches, lectures, or any similar means?		X	
i Other activities?		X	
j Total. Add lines 1c through 1i			14,322.
2a Did the activities in line 1 cause the organization to be not described in section 501(c)(3)?		X	
b If "Yes," enter the amount of any tax incurred under section 4912			
c If "Yes," enter the amount of any tax incurred by organization managers under section 4912			
d If the filing organization incurred a section 4912 tax, did it file Form 4720 for this year?			

Part III-A **Complete if the organization is exempt under section 501(c)(4), section 501(c)(5), or section 501(c)(6).**

			Yes	No
1	Were substantially all (90% or more) dues received nondeductible by members?	1		
2	Did the organization make only in-house lobbying expenditures of $2,000 or less?	2		
3	Did the organization agree to carry over lobbying and political campaign activity expenditures from the prior year?	3		

Part III-B **Complete if the organization is exempt under section 501(c)(4), section 501(c)(5), or section 501(c)(6) and if either (a) BOTH Part III-A, lines 1 and 2, are answered "No" OR (b) Part III-A, line 3, is answered "Yes."**

1	Dues, assessments and similar amounts from members	1	
2	Section 162(e) nondeductible lobbying and political expenditures **(do not include amounts of political expenses for which the section 527(f) tax was paid).**		
a	Current year	2a	
b	Carryover from last year	2b	
c	Total	2c	
3	Aggregate amount reported in section 6033(e)(1)(A) notices of nondeductible section 162(e) dues	3	
4	If notices were sent and the amount on line 2c exceeds the amount on line 3, what portion of the excess does the organization agree to carryover to the reasonable estimate of nondeductible lobbying and political expenditure next year?	4	
5	Taxable amount of lobbying and political expenditures (see instructions)	5	

Part IV **Supplemental Information**

Provide the descriptions required for Part I-A, line 1; Part I-B, line 4; Part I-C, line 5; Part II-A (affiliated group list); Part II-A, lines 1 and 2 (see instructions); and Part II-B, line 1. Also, complete this part for any additional information.

PART II-B, LINE 1, LOBBYING ACTIVITIES:

TO ADVOCATE FOR OUR FIVE CORE STRATEGIES: MORE GREAT SCHOOLS,

ACCESSIBLE DATA, GREAT IDEAS (TALENT), GOOD GOVERNANCE AND ENGAGED

COMMUNITY.

TO ENSURE A POLICY LANDSCAPE THAT ENSURES THAT EVERY KID CAN HAVE

Part IV **Supplemental Information** *(continued)*

ACCESS TO A GREAT SCHOOL IN THEIR NEIGHBORHOOD BY ENSURING CHOICE OPTIONS ARE MADE AVAILABLE.

SCHEDULE D (Form 990)

Department of the Treasury
Internal Revenue Service

Supplemental Financial Statements

▶ Complete if the organization answered "Yes" on Form 990, Part IV, line 6, 7, 8, 9, 10, 11a, 11b, 11c, 11d, 11e, 11f, 12a, or 12b.
▶ Attach to Form 990.
▶ Go to www.irs.gov/Form990 for instructions and the latest information.

OMB No. 1545-0047

2019

Open to Public Inspection

Name of the organization
OPPORTUNITY 180

Employer identification number
61-1753910

Part I Organizations Maintaining Donor Advised Funds or Other Similar Funds or Accounts.

Complete if the organization answered "Yes" on Form 990, Part IV, line 6.

		(a) Donor advised funds	(b) Funds and other accounts
1	Total number at end of year		
2	Aggregate value of contributions to (during year)		
3	Aggregate value of grants from (during year)		
4	Aggregate value at end of year		

5 Did the organization inform all donors and donor advisors in writing that the assets held in donor advised funds are the organization's property, subject to the organization's exclusive legal control? ☐ Yes ☐ No

6 Did the organization inform all grantees, donors, and donor advisors in writing that grant funds can be used only for charitable purposes and not for the benefit of the donor or donor advisor, or for any other purpose conferring impermissible private benefit? ☐ Yes ☐ No

Part II Conservation Easements.

Complete if the organization answered "Yes" on Form 990, Part IV, line 7.

1 Purpose(s) of conservation easements held by the organization (check all that apply).

☐ Preservation of land for public use (for example, recreation or education)
☐ Preservation of a historically important land area
☐ Protection of natural habitat
☐ Preservation of a certified historic structure
☐ Preservation of open space

2 Complete lines 2a through 2d if the organization held a qualified conservation contribution in the form of a conservation easement on the last day of the tax year.

			Held at the End of the Tax Year
a	Total number of conservation easements	2a	
b	Total acreage restricted by conservation easements	2b	
c	Number of conservation easements on a certified historic structure included in (a)	2c	
d	Number of conservation easements included in (c) acquired after 7/25/06, and not on a historic structure listed in the National Register	2d	

3 Number of conservation easements modified, transferred, released, extinguished, or terminated by the organization during the tax year ▶ _____

4 Number of states where property subject to conservation easement is located ▶ _____

5 Does the organization have a written policy regarding the periodic monitoring, inspection, handling of violations, and enforcement of the conservation easements it holds? ☐ Yes ☐ No

6 Staff and volunteer hours devoted to monitoring, inspecting, handling of violations, and enforcing conservation easements during the year ▶ _____

7 Amount of expenses incurred in monitoring, inspecting, handling of violations, and enforcing conservation easements during the year ▶ $ _____

8 Does each conservation easement reported on line 2(d) above satisfy the requirements of section 170(h)(4)(B)(i) and section 170(h)(4)(B)(ii)? ☐ Yes ☐ No

9 In Part XIII, describe how the organization reports conservation easements in its revenue and expense statement and balance sheet, and include, if applicable, the text of the footnote to the organization's financial statements that describes the organization's accounting for conservation easements.

Part III Organizations Maintaining Collections of Art, Historical Treasures, or Other Similar Assets.

Complete if the organization answered "Yes" on Form 990, Part IV, line 8.

1a If the organization elected, as permitted under FASB ASC 958, not to report in its revenue statement and balance sheet works of art, historical treasures, or other similar assets held for public exhibition, education, or research in furtherance of public service, provide in Part XIII the text of the footnote to its financial statements that describes these items.

b If the organization elected, as permitted under FASB ASC 958, to report in its revenue statement and balance sheet works of art, historical treasures, or other similar assets held for public exhibition, education, or research in furtherance of public service, provide the following amounts relating to these items:

(i) Revenue included on Form 990, Part VIII, line 1 ▶ $ _____

(ii) Assets included in Form 990, Part X ▶ $ _____

2 If the organization received or held works of art, historical treasures, or other similar assets for financial gain, provide the following amounts required to be reported under FASB ASC 958 relating to these items:

a Revenue included on Form 990, Part VIII, line 1 ▶ $ _____

b Assets included in Form 990, Part X ▶ $ _____

Part III Organizations Maintaining Collections of Art, Historical Treasures, or Other Similar Assets *(continued)*

3 Using the organization's acquisition, accession, and other records, check any of the following that make significant use of its collection items (check all that apply):

a ☐ Public exhibition
b ☐ Scholarly research
c ☐ Preservation for future generations
d ☐ Loan or exchange program
e ☐ Other _____

4 Provide a description of the organization's collections and explain how they further the organization's exempt purpose in Part XIII.

5 During the year, did the organization solicit or receive donations of art, historical treasures, or other similar assets to be sold to raise funds rather than to be maintained as part of the organization's collection? ☐ Yes ☐ No

Part IV Escrow and Custodial Arrangements. Complete if the organization answered "Yes" on Form 990, Part IV, line 9, or reported an amount on Form 990, Part X, line 21.

1a Is the organization an agent, trustee, custodian or other intermediary for contributions or other assets not included on Form 990, Part X? ☐ Yes ☐ No

b If "Yes," explain the arrangement in Part XIII and complete the following table:

		Amount
c Beginning balance	1c	
d Additions during the year	1d	
e Distributions during the year	1e	
f Ending balance	1f	

2a Did the organization include an amount on Form 990, Part X, line 21, for escrow or custodial account liability? ☐ Yes ☐ No

b If "Yes," explain the arrangement in Part XIII. Check here if the explanation has been provided on Part XIII ☐

Part V Endowment Funds. Complete if the organization answered "Yes" on Form 990, Part IV, line 10.

	(a) Current year	(b) Prior year	(c) Two years back	(d) Three years back	(e) Four years back
1a Beginning of year balance					
b Contributions					
c Net investment earnings, gains, and losses					
d Grants or scholarships					
e Other expenditures for facilities and programs					
f Administrative expenses					
g End of year balance					

2 Provide the estimated percentage of the current year end balance (line 1g, column (a)) held as:

a Board designated or quasi-endowment ▶ _____%
b Permanent endowment ▶ _____%
c Term endowment ▶ _____%

The percentages on lines 2a, 2b, and 2c should equal 100%.

3a Are there endowment funds not in the possession of the organization that are held and administered for the organization by:

		Yes	No
(i) Unrelated organizations	3a(i)		
(ii) Related organizations	3a(ii)		
b If "Yes" on line 3a(ii), are the related organizations listed as required on Schedule R?	3b		

4 Describe in Part XIII the intended uses of the organization's endowment funds.

Part VI Land, Buildings, and Equipment.

Complete if the organization answered "Yes" on Form 990, Part IV, line 11a. See Form 990, Part X, line 10.

Description of property	(a) Cost or other basis (investment)	(b) Cost or other basis (other)	(c) Accumulated depreciation	(d) Book value
1a Land				
b Buildings				
c Leasehold improvements				
d Equipment		8,550.	4,402.	4,148.
e Other		36,596.	33,025.	3,571.
Total. Add lines 1a through 1e. *(Column (d) must equal Form 990, Part X, column (B), line 10c.)* ▶				7,719.

Part VII Investments - Other Securities.

Complete if the organization answered "Yes" on Form 990, Part IV, line 11b. See Form 990, Part X, line 12.

(a) Description of security or category (including name of security)	(b) Book value	(c) Method of valuation: Cost or end-of-year market value
(1) Financial derivatives		
(2) Closely held equity interests		
(3) Other		
(A)		
(B)		
(C)		
(D)		
(E)		
(F)		
(G)		
(H)		
Total. (Col. (b) must equal Form 990, Part X, col. (B) line 12.) ▶		

Part VIII Investments - Program Related.

Complete if the organization answered "Yes" on Form 990, Part IV, line 11c. See Form 990, Part X, line 13.

(a) Description of investment	(b) Book value	(c) Method of valuation: Cost or end-of-year market value
(1)		
(2)		
(3)		
(4)		
(5)		
(6)		
(7)		
(8)		
(9)		
Total. (Col. (b) must equal Form 990, Part X, col. (B) line 13.) ▶		

Part IX Other Assets.

Complete if the organization answered "Yes" on Form 990, Part IV, line 11d. See Form 990, Part X, line 15.

(a) Description	(b) Book value
(1)	
(2)	
(3)	
(4)	
(5)	
(6)	
(7)	
(8)	
(9)	
Total. *(Column (b) must equal Form 990, Part X, col. (B) line 15.)* ▶	

Part X Other Liabilities.

Complete if the organization answered "Yes" on Form 990, Part IV, line 11e or 11f. See Form 990, Part X, line 25.

1. (a) Description of liability	(b) Book value
(1) Federal income taxes	
(2) PAYROLL LIABILITIES	13,388.
(3)	
(4)	
(5)	
(6)	
(7)	
(8)	
(9)	
Total. *(Column (b) must equal Form 990, Part X, col. (B) line 25.)* ▶	13,388.

2. Liability for uncertain tax positions. In Part XIII, provide the text of the footnote to the organization's financial statements that reports the organization's liability for uncertain tax positions under FASB ASC 740. Check here if the text of the footnote has been provided in Part XIII ☐

Part XI Reconciliation of Revenue per Audited Financial Statements With Revenue per Return.

Complete if the organization answered "Yes" on Form 990, Part IV, line 12a.

1	Total revenue, gains, and other support per audited financial statements			1	
2	Amounts included on line 1 but not on Form 990, Part VIII, line 12:				
a	Net unrealized gains (losses) on investments	2a			
b	Donated services and use of facilities	2b			
c	Recoveries of prior year grants	2c			
d	Other (Describe in Part XIII.)	2d			
e	Add lines **2a** through **2d**			2e	
3	Subtract line **2e** from line **1**			3	
4	Amounts included on Form 990, Part VIII, line 12, but not on line 1:				
a	Investment expenses not included on Form 990, Part VIII, line 7b	4a			
b	Other (Describe in Part XIII.)	4b			
c	Add lines **4a** and **4b**			4c	
5	Total revenue. Add lines **3** and **4c.** *(This must equal Form 990, Part I, line 12.)*			5	

Part XII Reconciliation of Expenses per Audited Financial Statements With Expenses per Return.

Complete if the organization answered "Yes" on Form 990, Part IV, line 12a.

1	Total expenses and losses per audited financial statements			1	
2	Amounts included on line 1 but not on Form 990, Part IX, line 25:				
a	Donated services and use of facilities	2a			
b	Prior year adjustments	2b			
c	Other losses	2c			
d	Other (Describe in Part XIII.)	2d			
e	Add lines **2a** through **2d**			2e	
3	Subtract line **2e** from line **1**			3	
4	Amounts included on Form 990, Part IX, line 25, but not on line 1:				
a	Investment expenses not included on Form 990, Part VIII, line 7b	4a			
b	Other (Describe in Part XIII.)	4b			
c	Add lines **4a** and **4b**			4c	
5	Total expenses. Add lines **3** and **4c.** *(This must equal Form 990, Part I, line 18.)*			5	

Part XIII Supplemental Information.

Provide the descriptions required for Part II, lines 3, 5, and 9; Part III, lines 1a and 4; Part IV, lines 1b and 2b; Part V, line 4; Part X, line 2; Part XI, lines 2d and 4b; and Part XII, lines 2d and 4b. Also complete this part to provide any additional information.

SCHEDULE I (Form 990)

Department of the Treasury
Internal Revenue Service

Grants and Other Assistance to Organizations, Governments, and Individuals in the United States

Complete if the organization answered "Yes" on Form 990, Part IV, line 21 or 22.

▶ **Attach to Form 990.**

▶ **Go to www.irs.gov/Form990 for the latest information.**

OMB No. 1545-0047

2019

Open to Public Inspection

Name of the organization
OPPORTUNITY 180

Employer identification number
61-1753910

Part I General Information on Grants and Assistance

1 Does the organization maintain records to substantiate the amount of the grants or assistance, the grantees' eligibility for the grants or assistance, and the selection criteria used to award the grants or assistance? ..... [X] Yes [ ] No

2 Describe in Part IV the organization's procedures for monitoring the use of grant funds in the United States.

Part II Grants and Other Assistance to Domestic Organizations and Domestic Governments. Complete if the organization answered "Yes" on Form 990, Part IV, line 21, for any recipient that received more than $5,000. Part II can be duplicated if additional space is needed.

1 (a) Name and address of organization or government	(b) EIN	(c) IRC section (if applicable)	(d) Amount of cash grant	(e) Amount of non-cash assistance	(f) Method of valuation (book, FMV, appraisal, other)	(g) Description of noncash assistance	(h) Purpose of grant or assistance
DEMOCRACY PREP PUBLIC SCHOOLS 1767 PARK AVENUE, 3RD FLOOR NEW YORK, NY 10035	20-2629354	501(C)(3)	122,000.	0.			COMMUNITY ENGAGEMENT GRANT
NEVADA PREPARATORY CHARTER 2550 E DESERT INN RD, #240 LAS VEGAS, NV 89121	32-0511761	501(C)(3)	75,000.	0.			FACILITY GRANT
NEVADA RISE ACADEMY CHARTER 1120 BLAKES FIELD PLACE HENDERSON, NV 89011	81-4539783	501(C)(3)	48,500.	0.			FACILITY GRANT
TEACH PLUS 27-43 WORMWOOD ST TOWER PT BOSTON, MA 02210	13-3541913	501(C)(3)	151,750.	0.			FELLOWSHIP GRANT
EXPLORE ACADEMY FOUNDATION 5100 MASTHEAD ST NE ALBUQUERQUE, NM 87109	47-1720796	501(C)(3)	154,017.	0.			PLANNING GRANT
PHALEN LEADERSHIP ACADEMY 2323 N. ILLINOIS ST INDIANAPOLIS, IN 46208	36-4729586	501(C)(3)	275,452.	0.			YEAR ZERO GRANT

2 Enter total number of section 501(c)(3) and government organizations listed in the line 1 table ..... ▶ 12.

3 Enter total number of other organizations listed in the line 1 table ..... ▶ 12.

Part II **Continuation of Grants and Other Assistance to Governments and Organizations in the United States** (Schedule I (Form 990), Part II.)

(a) Name and address of organization or government	(b) EIN	(c) IRC section if applicable	(d) Amount of cash grant	(e) Amount of non-cash assistance	(f) Method of valuation (book, FMV, appraisal, other)	(g) Description of non-cash assistance	(h) Purpose of grant or assistance
ROOTED SCHOOL 4238 ST. CHARLES AVENUE NEW ORLEANS, LA 70115	47-1901769	501(C)(3)	208,199.	0.			PLANNING GRANT
URBAN PREP ACADEMIES 420 N. WABASH AVENUE CHICAGO, IL 60611	20-0138672	501(C)(3)	11,000.	0.			EXPANSION GRANT
FRIENDS OF ACE 2800 VASSAR ST. RENO, NV 89502	27-0050961	501(C)(3)	85,000.	0.			STRATEGIC SUPPORT GRANT
PILOTED SCHOOLS INC. 2710 BETHEL AVE INDIANAPOLIS, IN 46201	82-2446338	501(C)(3)	70,000.	0.			PLANNING GRANT
ACCELERATE INSTITUTE 833 W JACKSON BLVD #800 CHICAGO, IL 60607	36-3764476	501(C)(3)	183,589.	0.			RYAN FELLOWSHIP GRANT
BUILDING HOPE NEVADA 8936 SPANISH RIDGE LAS VEGAS, NV 89148	26-4170954	501(C)(3)	500,000.	0.			GREAT SCHOOLS GRANT

Part III **Grants and Other Assistance to Domestic Individuals.** Complete if the organization answered "Yes" on Form 990, Part IV, line 22. Part III can be duplicated if additional space is needed.

(a) Type of grant or assistance	(b) Number of recipients	(c) Amount of cash grant	(d) Amount of non-cash assistance	(e) Method of valuation (book, FMV, appraisal, other)	(f) Description of noncash assistance

Part IV **Supplemental Information.** Provide the information required in Part I, line 2; Part III, column (b); and any other additional information.

PART I, LINE 2:

ALL GRANTED FUNDS REQUIRE ONGOING REPORTING TO ENSURE ACCOUNTABILITY.

REPORTING FREQUENCY VARIES DEPENDENT ON THE NATURE OF THE GRANT AND

FUNDING. OPPORTUNITY 180 WILL FOLLOW-UP WITH GRANT RECIPIENTS WHEN

DEADLINES ARE APPROACHING. OPPORTUNITY 180 REVIEWS GRANT REPORTS TO MONITOR

PROGRESS.

SCHEDULE M (Form 990)

Department of the Treasury
Internal Revenue Service

Noncash Contributions

▶ **Complete if the organizations answered "Yes" on Form 990, Part IV, lines 29 or 30.**
▶ **Attach to Form 990.**
▶ **Go to www.irs.gov/Form990 for instructions and the latest information.**

OMB No. 1545-0047

2019

Open to Public Inspection

Name of the organization

OPPORTUNITY 180

Employer identification number

61-1753910

Part I Types of Property

		(a) Check if applicable	(b) Number of contributions or items contributed	(c) Noncash contribution amounts reported on Form 990, Part VIII, line 1g	(d) Method of determining noncash contribution amounts
1	Art - Works of art				
2	Art - Historical treasures				
3	Art - Fractional interests				
4	Books and publications				
5	Clothing and household goods				
6	Cars and other vehicles	X	2	61,120.	KELLY BLUE BOOK VALU
7	Boats and planes				
8	Intellectual property				
9	Securities - Publicly traded				
10	Securities - Closely held stock				
11	Securities - Partnership, LLC, or trust interests				
12	Securities - Miscellaneous				
13	Qualified conservation contribution - Historic structures				
14	Qualified conservation contribution - Other				
15	Real estate - Residential				
16	Real estate - Commercial				
17	Real estate - Other				
18	Collectibles				
19	Food inventory				
20	Drugs and medical supplies				
21	Taxidermy				
22	Historical artifacts				
23	Scientific specimens				
24	Archeological artifacts				
25	Other ▶ ( )				
26	Other ▶ ( )				
27	Other ▶ ( )				
28	Other ▶ ( )				

				Yes	No
29	Number of Forms 8283 received by the organization during the tax year for contributions for which the organization completed Form 8283, Part IV, Donee Acknowledgement	29			
30a	During the year, did the organization receive by contribution any property reported in Part I, lines 1 through 28, that it must hold for at least three years from the date of the initial contribution, and which isn't required to be used for exempt purposes for the entire holding period?	30a			X
b	If "Yes," describe the arrangement in Part II.				
31	Does the organization have a gift acceptance policy that requires the review of any nonstandard contributions?	31			X
32a	Does the organization hire or use third parties or related organizations to solicit, process, or sell noncash contributions?	32a			X
b	If "Yes," describe in Part II.				
33	If the organization didn't report an amount in column (c) for a type of property for which column (a) is checked, describe in Part II.				

Part II **Supplemental Information.** Provide the information required by Part I, lines 30b, 32b, and 33, and whether the organization is reporting in Part I, column (b), the number of contributions, the number of items received, or a combination of both. Also complete this part for any additional information.

SCHEDULE O
(Form 990 or 990-EZ)

Department of the Treasury
Internal Revenue Service

Supplemental Information to Form 990 or 990-EZ

Complete to provide information for responses to specific questions on Form 990 or 990-EZ or to provide any additional information.
▶ Attach to Form 990 or 990-EZ.
▶ Go to www.irs.gov/Form990 for the latest information.

OMB No. 1545-0047

2019

Open to Public Inspection

Name of the organization
OPPORTUNITY 180

Employer identification number
61-1753910

FORM 990, PART III, LINE 1, DESCRIPTION OF ORGANIZATION MISSION:

AND SUPPORT HIGH-PERFORMING SCHOOLS AND ORGANIZATIONS THAT WILL PROVIDE STUDENTS WITH OUTSTANDING EDUCATIONAL OPPORTUNITIES, AND HELP PROVE THAT EVERY CHILD CAN ACHIEVE, REGARDLESS OF ETHNICITY, ZIP CODE OR FAMILY INCOME.

FORM 990, PART VI, SECTION A, LINE 8B:

THE ORGANIZATION DOES NOT HAVE ANY COMMITTEE WITH BROAD AUTHORITY TO ACT ON BEHALF OF THE BOARD.

FORM 990, PART VI, SECTION B, LINE 11B:

LINE 11B EXPLANATION - OPPORTUNITY 180 BOARD OF DIRECTORS WILL REVIEW THE PREPARED IRS FORM 990.

FORM 990, PART VI, SECTION B, LINE 15A:

THE BOARD OF DIRECTORS RETAINED AN OUTSIDE ORGANIZATION TO ANALYZE NONPROFIT SALARIES AND USED THE COMPENSATION ANALYSIS TO DETERMINE THE SALARY FOR THE CEO.

FORM 990, PART VI, SECTION C, LINE 19:

NO OTHER DOCUMENTS AVAILABLE TO THE PUBLIC.

Form **8868**
(Rev. January 2020)

Department of the Treasury
Internal Revenue Service

Application for Automatic Extension of Time To File an Exempt Organization Return

▶ **File a separate application for each return.**
▶ **Go to www.irs.gov/Form8868 for the latest information.**

OMB No. 1545-0047

Electronic filing (e-file). You can electronically file Form 8868 to request a 6-month automatic extension of time to file any of the forms listed below with the exception of Form 8870, Information Return for Transfers Associated With Certain Personal Benefit Contracts, for which an extension request must be sent to the IRS in paper format (see instructions). For more details on the electronic filing of this form, visit *www.irs.gov/e-file-providers/e-file-for-charities-and-non-profits.*

Automatic 6-Month Extension of Time. Only submit original (no copies needed).

All corporations required to file an income tax return other than Form 990-T (including 1120-C filers), partnerships, REMICs, and trusts must use Form 7004 to request an extension of time to file income tax returns.

Type or print	Name of exempt organization or other filer, see instructions.	Taxpayer identification number (TIN)
File by the due date for filing your return. See instructions.	OPPORTUNITY 180	61-1753910
	Number, street, and room or suite no. If a P.O. box, see instructions. 11035 LAVENDER HILL DR STE 160-180	
	City, town or post office, state, and ZIP code. For a foreign address, see instructions. LAS VEGAS, NV 89135-2955	

Enter the Return Code for the return that this application is for (file a separate application for each return) 0 1

Application Is For	Return Code	Application Is For	Return Code
Form 990 or Form 990-EZ	01	Form 990-T (corporation)	07
Form 990-BL	02	Form 1041-A	08
Form 4720 (individual)	03	Form 4720 (other than individual)	09
Form 990-PF	04	Form 5227	10
Form 990-T (sec. 401(a) or 408(a) trust)	05	Form 6069	11
Form 990-T (trust other than above)	06	Form 8870	12

- The books are in the care of ▶ EIDE BAILLY LLP
  9139 W RUSSELL RD STE. 200 - LAS VEGAS, NV 89148
  Telephone No. ▶ (702) 304-0405 Fax No. ▶ (702) 304-0415
- If the organization does not have an office or place of business in the United States, check this box ..... ▶ ☐
- If this is for a Group Return, enter the organization's four digit Group Exemption Number (GEN) _____. If this is for the whole group, check this box ▶ ☐. If it is for part of the group, check this box ▶ ☐ and attach a list with the names and TINs of all members the extension is for.

1 I request an automatic 6-month extension of time until NOVEMBER 16, 2020, to file the exempt organization return for the organization named above. The extension is for the organization's return for:
▶ ☒ calendar year 2019 or
▶ ☐ tax year beginning _____, and ending _____.

2 If the tax year entered in line 1 is for less than 12 months, check reason: ☐ Initial return ☐ Final return
☐ Change in accounting period

3a	If this application is for Forms 990-BL, 990-PF, 990-T, 4720, or 6069, enter the tentative tax, less any nonrefundable credits. See instructions.	**3a**	$	0.
b	If this application is for Forms 990-PF, 990-T, 4720, or 6069, enter any refundable credits and estimated tax payments made. Include any prior year overpayment allowed as a credit.	**3b**	$	0.
c	**Balance due.** Subtract line 3b from line 3a. Include your payment with this form, if required, by using EFTPS (Electronic Federal Tax Payment System). See instructions.	**3c**	$	0.

Caution: If you are going to make an electronic funds withdrawal (direct debit) with this Form 8868, see Form 8453-EO and Form 8879-EO for payment instructions.

LHA **For Privacy Act and Paperwork Reduction Act Notice, see instructions.** Form **8868** (Rev. 1-2020)

CHANGE IN ACCOUNTING PERIOD

Form **990** (Rev. January 2020)

Department of the Treasury Internal Revenue Service

Return of Organization Exempt From Income Tax

Under section 501(c), 527, or 4947(a)(1) of the Internal Revenue Code (except private foundations)

▶ **Do not enter social security numbers on this form as it may be made public.**

▶ **Go to www.irs.gov/Form990 for instructions and the latest information.**

OMB No. 1545-0047

2019

Open to Public Inspection

A For the 2019 calendar year, or tax year beginning JAN 1, 2020 **and ending** JUN 30, 2020

B Check if applicable:
- ☐ Address change
- ☐ Name change
- ☐ Initial return
- ☐ Final return/ terminated
- ☐ Amended return
- ☐ Application pending

C Name of organization
OPPORTUNITY 180

Doing business as

Number and street (or P.O. box if mail is not delivered to street address) 11035 LAVENDER HILL DR STE 160-180

Room/suite

City or town, state or province, country, and ZIP or foreign postal code
LAS VEGAS, NV 89135-2955

F Name and address of principal officer: JANA WILCOX LAVIN
11035 LAVENDER HILL DR STE 160-180, LAS VEGA

D Employer identification number
61-1753910

E Telephone number
(702) 776-6086

G Gross receipts $ 10,324.

H(a) Is this a group return for subordinates? ☐ Yes ☒ No

H(b) Are all subordinates included? ☐ Yes ☐ No
If "No," attach a list. (see instructions)

H(c) Group exemption number ▶

I Tax-exempt status: ☒ 501(c)(3) ☐ 501(c) ( ) ◀ (insert no.) ☐ 4947(a)(1) or ☐ 527

J Website: ▶ OPPORTUNITY180.ORG

K Form of organization: ☒ Corporation ☐ Trust ☐ Association ☐ Other ▶

L Year of formation: 2014 **M** State of legal domicile: NV

Part I Summary

Activities & Governance

1 Briefly describe the organization's mission or most significant activities: TO PROVIDE STUDENTS WITH OUTSTANDING EDUCATIONAL OPPORTUNITIES

2 Check this box ▶ ☐ if the organization discontinued its operations or disposed of more than 25% of its net assets.

3	Number of voting members of the governing body (Part VI, line 1a)	3	4
4	Number of independent voting members of the governing body (Part VI, line 1b)	4	4
5	Total number of individuals employed in calendar year 2019 (Part V, line 2a)	5	10
6	Total number of volunteers (estimate if necessary)	6	4
7a	Total unrelated business revenue from Part VIII, column (C), line 12	7a	0.
b	Net unrelated business taxable income from Form 990-T, line 39	7b	0.

Revenue

		Prior Year	Current Year
8	Contributions and grants (Part VIII, line 1h)	61,120.	1,734.
9	Program service revenue (Part VIII, line 2g)	0.	0.
10	Investment income (Part VIII, column (A), lines 3, 4, and 7d)	0.	4,736.
11	Other revenue (Part VIII, column (A), lines 5, 6d, 8c, 9c, 10c, and 11e)	0.	3,854.
12	Total revenue - add lines 8 through 11 (must equal Part VIII, column (A), line 12)	61,120.	10,324.

Expenses

13	Grants and similar amounts paid (Part IX, column (A), lines 1-3)	2,001,672.	2,046,207.
14	Benefits paid to or for members (Part IX, column (A), line 4)	0.	0.
15	Salaries, other compensation, employee benefits (Part IX, column (A), lines 5-10)	494,076.	393,537.
16a	Professional fundraising fees (Part IX, column (A), line 11e)	0.	0.
b	Total fundraising expenses (Part IX, column (D), line 25) ▶ 116,595.		
17	Other expenses (Part IX, column (A), lines 11a-11d, 11f-24e)	2,095,714.	2,429,949.
18	Total expenses. Add lines 13-17 (must equal Part IX, column (A), line 25)	4,591,462.	4,869,693.
19	Revenue less expenses. Subtract line 18 from line 12	<4,530,342.>	<4,859,369.>

Net Assets or Fund Balances

		Beginning of Current Year	End of Year
20	Total assets (Part X, line 16)	8,369,345.	5,468,462.
21	Total liabilities (Part X, line 26)	1,045,293.	2,001,077.
22	Net assets or fund balances. Subtract line 21 from line 20	7,324,052.	3,467,385.

Part II Signature Block

Under penalties of perjury, I declare that I have examined this return, including accompanying schedules and statements, and to the best of my knowledge and belief, it is true, correct, and complete. Declaration of preparer (other than officer) is based on all information of which preparer has any knowledge.

Sign Here

▶ Signature of officer — Date

▶ JANA WILCOX LAVIN, PRESIDENT & EXECUTIVE DIRECTOR
Type or print name and title

Paid Preparer Use Only

Print/Type preparer's name	Preparer's signature	Date	Check if self-employed	PTIN
BRADLEY K. WALLACE, CPA	BRADLEY K. WALLACE,	04/15/21	☐	P01339113

Firm's name ▶ EIDE BAILLY LLP — Firm's EIN ▶ 45-0250958

Firm's address ▶ 5 TRIAD CENTER, STE. 600
SALT LAKE CITY, UT 84180-1106 — Phone no. 801-532-2200

May the IRS discuss this return with the preparer shown above? (see instructions) ☒ Yes ☐ No

Part III Statement of Program Service Accomplishments

Check if Schedule O contains a response or note to any line in this Part III X

1 Briefly describe the organization's mission:
WE BELIEVE THAT ALL CHILDREN DESERVE GREAT SCHOOLS. WE FIND IT UNACCEPTABLE THAT OVER 82,000 CHILDREN IN CLARK COUNTY ATTEND LOW-PERFORMING PUBLIC SCHOOLS AND ARE COMMITTED TO SOLVING THIS PROBLEM. AS A NONPROFIT ORGANIZATION, WE OFFER RESOURCES TO LAUNCH

2 Did the organization undertake any significant program services during the year which were not listed on the prior Form 990 or 990-EZ? ..... ☐ Yes ☒ No
If "Yes," describe these new services on Schedule O.

3 Did the organization cease conducting, or make significant changes in how it conducts, any program services? ..... ☐ Yes ☒ No
If "Yes," describe these changes on Schedule O.

4 Describe the organization's program service accomplishments for each of its three largest program services, as measured by expenses. Section 501(c)(3) and 501(c)(4) organizations are required to report the amount of grants and allocations to others, the total expenses, and revenue, if any, for each program service reported.

4a (Code:) (Expenses $ 4,470,946. including grants of $ 2,046,207.) (Revenue $)
OPPORTUNITY 180 PROVIDED SUPPORT TO SCHOOL ORGANIZATIONS RELATED TO THEIR MISSION AND EXPANSION FOR SCHOOLS INCLUDING NV PREP, NV RISE, DEMOCRACY PREP, ACE HIGH SCHOOL, EQUIPO ACADEMY, PHALEN LEADERSHIP ACADEMIES, PILOTED, ROOTED, URBAN PREP AND EXPLORE SCHOOLS. IN ADDITION OPPORTUNITY 180 PROVIDED LEADERSHIP DEVELOPMENT TO EDUCATORS THROUGH TEACH PLUS NEVADA, THE NEW TEACHER PROJECT, AND ACCELERATE INSTITUTE PARTNERSHIPS.

4b (Code:) (Expenses $ including grants of $) (Revenue $)

4c (Code:) (Expenses $ including grants of $) (Revenue $)

4d Other program services (Describe on Schedule O.)
(Expenses $ including grants of $) (Revenue $)

4e Total program service expenses ▶ 4,470,946.

Part IV Checklist of Required Schedules

			Yes	No
1	Is the organization described in section 501(c)(3) or 4947(a)(1) (other than a private foundation)? *If "Yes," complete Schedule A*	1	X	
2	Is the organization required to complete *Schedule B, Schedule of Contributors*?	2		X
3	Did the organization engage in direct or indirect political campaign activities on behalf of or in opposition to candidates for public office? *If "Yes," complete Schedule C, Part I*	3		X
4	**Section 501(c)(3) organizations.** Did the organization engage in lobbying activities, or have a section 501(h) election in effect during the tax year? *If "Yes," complete Schedule C, Part II*	4	X	
5	Is the organization a section 501(c)(4), 501(c)(5), or 501(c)(6) organization that receives membership dues, assessments, or similar amounts as defined in Revenue Procedure 98-19? *If "Yes," complete Schedule C, Part III*	5		X
6	Did the organization maintain any donor advised funds or any similar funds or accounts for which donors have the right to provide advice on the distribution or investment of amounts in such funds or accounts? *If "Yes," complete Schedule D, Part I*	6		X
7	Did the organization receive or hold a conservation easement, including easements to preserve open space, the environment, historic land areas, or historic structures? *If "Yes," complete Schedule D, Part II*	7		X
8	Did the organization maintain collections of works of art, historical treasures, or other similar assets? *If "Yes," complete Schedule D, Part III*	8		X
9	Did the organization report an amount in Part X, line 21, for escrow or custodial account liability, serve as a custodian for amounts not listed in Part X; or provide credit counseling, debt management, credit repair, or debt negotiation services? *If "Yes," complete Schedule D, Part IV*	9		X
10	Did the organization, directly or through a related organization, hold assets in donor-restricted endowments or in quasi endowments? *If "Yes," complete Schedule D, Part V*	10		X
11	If the organization's answer to any of the following questions is "Yes," then complete Schedule D, Parts VI, VII, VIII, IX, or X as applicable.			
a	Did the organization report an amount for land, buildings, and equipment in Part X, line 10? *If "Yes," complete Schedule D, Part VI*	11a	X	
b	Did the organization report an amount for investments - other securities in Part X, line 12, that is 5% or more of its total assets reported in Part X, line 16? *If "Yes," complete Schedule D, Part VII*	11b	X	
c	Did the organization report an amount for investments - program related in Part X, line 13, that is 5% or more of its total assets reported in Part X, line 16? *If "Yes," complete Schedule D, Part VIII*	11c		X
d	Did the organization report an amount for other assets in Part X, line 15, that is 5% or more of its total assets reported in Part X, line 16? *If "Yes," complete Schedule D, Part IX*	11d		X
e	Did the organization report an amount for other liabilities in Part X, line 25? *If "Yes," complete Schedule D, Part X*	11e	X	
f	Did the organization's separate or consolidated financial statements for the tax year include a footnote that addresses the organization's liability for uncertain tax positions under FIN 48 (ASC 740)? *If "Yes," complete Schedule D, Part X*	11f		X
12a	Did the organization obtain separate, independent audited financial statements for the tax year? *If "Yes," complete Schedule D, Parts XI and XII*	12a	X	
b	Was the organization included in consolidated, independent audited financial statements for the tax year? *If "Yes," and if the organization answered "No" to line 12a, then completing Schedule D, Parts XI and XII is optional*	12b		X
13	Is the organization a school described in section 170(b)(1)(A)(ii)? *If "Yes," complete Schedule E*	13		X
14a	Did the organization maintain an office, employees, or agents outside of the United States?	14a		X
b	Did the organization have aggregate revenues or expenses of more than $10,000 from grantmaking, fundraising, business, investment, and program service activities outside the United States, or aggregate foreign investments valued at $100,000 or more? *If "Yes," complete Schedule F, Parts I and IV*	14b		X
15	Did the organization report on Part IX, column (A), line 3, more than $5,000 of grants or other assistance to or for any foreign organization? *If "Yes," complete Schedule F, Parts II and IV*	15		X
16	Did the organization report on Part IX, column (A), line 3, more than $5,000 of aggregate grants or other assistance to or for foreign individuals? *If "Yes," complete Schedule F, Parts III and IV*	16		X
17	Did the organization report a total of more than $15,000 of expenses for professional fundraising services on Part IX, column (A), lines 6 and 11e? *If "Yes," complete Schedule G, Part I*	17		X
18	Did the organization report more than $15,000 total of fundraising event gross income and contributions on Part VIII, lines 1c and 8a? *If "Yes," complete Schedule G, Part II*	18		X
19	Did the organization report more than $15,000 of gross income from gaming activities on Part VIII, line 9a? *If "Yes," complete Schedule G, Part III*	19		X
20a	Did the organization operate one or more hospital facilities? *If "Yes," complete Schedule H*	20a		X
b	If "Yes" to line 20a, did the organization attach a copy of its audited financial statements to this return?	20b		
21	Did the organization report more than $5,000 of grants or other assistance to any domestic organization or domestic government on Part IX, column (A), line 1? *If "Yes," complete Schedule I, Parts I and II*	21	X	

Part IV Checklist of Required Schedules *(continued)*

			Yes	No
22	Did the organization report more than $5,000 of grants or other assistance to or for domestic individuals on Part IX, column (A), line 2? *If "Yes," complete Schedule I, Parts I and III*	22		X
23	Did the organization answer "Yes" to Part VII, Section A, line 3, 4, or 5 about compensation of the organization's current and former officers, directors, trustees, key employees, and highest compensated employees? *If "Yes," complete Schedule J*	23		X
24a	Did the organization have a tax-exempt bond issue with an outstanding principal amount of more than $100,000 as of the last day of the year, that was issued after December 31, 2002? *If "Yes," answer lines 24b through 24d and complete Schedule K. If "No," go to line 25a*	24a		X
b	Did the organization invest any proceeds of tax-exempt bonds beyond a temporary period exception?	24b		
c	Did the organization maintain an escrow account other than a refunding escrow at any time during the year to defease any tax-exempt bonds?	24c		
d	Did the organization act as an "on behalf of" issuer for bonds outstanding at any time during the year?	24d		
25a	**Section 501(c)(3), 501(c)(4), and 501(c)(29) organizations.** Did the organization engage in an excess benefit transaction with a disqualified person during the year? *If "Yes," complete Schedule L, Part I*	25a		X
b	Is the organization aware that it engaged in an excess benefit transaction with a disqualified person in a prior year, and that the transaction has not been reported on any of the organization's prior Forms 990 or 990-EZ? *If "Yes," complete Schedule L, Part I*	25b		X
26	Did the organization report any amount on Part X, line 5 or 22, for receivables from or payables to any current or former officer, director, trustee, key employee, creator or founder, substantial contributor, or 35% controlled entity or family member of any of these persons? *If "Yes," complete Schedule L, Part II*	26		X
27	Did the organization provide a grant or other assistance to any current or former officer, director, trustee, key employee, creator or founder, substantial contributor or employee thereof, a grant selection committee member, or to a 35% controlled entity (including an employee thereof) or family member of any of these persons? *If "Yes," complete Schedule L, Part III*	27		X
28	Was the organization a party to a business transaction with one of the following parties (see Schedule L, Part IV instructions, for applicable filing thresholds, conditions, and exceptions):			
a	A current or former officer, director, trustee, key employee, creator or founder, or substantial contributor? *If "Yes," complete Schedule L, Part IV*	28a		X
b	A family member of any individual described in line 28a? *If "Yes," complete Schedule L, Part IV*	28b		X
c	A 35% controlled entity of one or more individuals and/or organizations described in lines 28a or 28b? *If "Yes," complete Schedule L, Part IV*	28c		X
29	Did the organization receive more than $25,000 in non-cash contributions? *If "Yes," complete Schedule M*	29		X
30	Did the organization receive contributions of art, historical treasures, or other similar assets, or qualified conservation contributions? *If "Yes," complete Schedule M*	30		X
31	Did the organization liquidate, terminate, or dissolve and cease operations? *If "Yes," complete Schedule N, Part I*	31		X
32	Did the organization sell, exchange, dispose of, or transfer more than 25% of its net assets? *If "Yes," complete Schedule N, Part II*	32		X
33	Did the organization own 100% of an entity disregarded as separate from the organization under Regulations sections 301.7701-2 and 301.7701-3? *If "Yes," complete Schedule R, Part I*	33		X
34	Was the organization related to any tax-exempt or taxable entity? *If "Yes," complete Schedule R, Part II, III, or IV, and Part V, line 1*	34		X
35a	Did the organization have a controlled entity within the meaning of section 512(b)(13)?	35a		X
b	If "Yes" to line 35a, did the organization receive any payment from or engage in any transaction with a controlled entity within the meaning of section 512(b)(13)? *If "Yes," complete Schedule R, Part V, line 2*	35b		
36	**Section 501(c)(3) organizations.** Did the organization make any transfers to an exempt non-charitable related organization? *If "Yes," complete Schedule R, Part V, line 2*	36		X
37	Did the organization conduct more than 5% of its activities through an entity that is not a related organization and that is treated as a partnership for federal income tax purposes? *If "Yes," complete Schedule R, Part VI*	37		X
38	Did the organization complete Schedule O and provide explanations in Schedule O for Part VI, lines 11b and 19? **Note:** All Form 990 filers are required to complete Schedule O	38	X	

Part V Statements Regarding Other IRS Filings and Tax Compliance

Check if Schedule O contains a response or note to any line in this Part V ☐

				Yes	No
1a	Enter the number reported in Box 3 of Form 1096. Enter -0- if not applicable	1a	16		
b	Enter the number of Forms W-2G included in line 1a. Enter -0- if not applicable	1b	0		
c	Did the organization comply with backup withholding rules for reportable payments to vendors and reportable gaming (gambling) winnings to prize winners?			1c X	

Part V Statements Regarding Other IRS Filings and Tax Compliance *(continued)*

			Yes	No
2a	Enter the number of employees reported on Form W-3, Transmittal of Wage and Tax Statements, filed for the calendar year ending with or within the year covered by this return **2a** 10			
b	If at least one is reported on line 2a, did the organization file all required federal employment tax returns?	**2b**	X	
	Note: If the sum of lines 1a and 2a is greater than 250, you may be required to *e-file* (see instructions)			
3a	Did the organization have unrelated business gross income of $1,000 or more during the year?	**3a**		X
b	If "Yes," has it filed a Form 990-T for this year? *If "No" to line 3b, provide an explanation on Schedule O*	**3b**		
4a	At any time during the calendar year, did the organization have an interest in, or a signature or other authority over, a financial account in a foreign country (such as a bank account, securities account, or other financial account)?	**4a**		X
b	If "Yes," enter the name of the foreign country ▶ _____ See instructions for filing requirements for FinCEN Form 114, Report of Foreign Bank and Financial Accounts (FBAR).			
5a	Was the organization a party to a prohibited tax shelter transaction at any time during the tax year?	**5a**		X
b	Did any taxable party notify the organization that it was or is a party to a prohibited tax shelter transaction?	**5b**		X
c	If "Yes" to line 5a or 5b, did the organization file Form 8886-T?	**5c**		
6a	Does the organization have annual gross receipts that are normally greater than $100,000, and did the organization solicit any contributions that were not tax deductible as charitable contributions?	**6a**		X
b	If "Yes," did the organization include with every solicitation an express statement that such contributions or gifts were not tax deductible?	**6b**		
7	**Organizations that may receive deductible contributions under section 170(c).**			
a	Did the organization receive a payment in excess of $75 made partly as a contribution and partly for goods and services provided to the payor?	**7a**		X
b	If "Yes," did the organization notify the donor of the value of the goods or services provided?	**7b**		
c	Did the organization sell, exchange, or otherwise dispose of tangible personal property for which it was required to file Form 8282?	**7c**		X
d	If "Yes," indicate the number of Forms 8282 filed during the year **7d**			
e	Did the organization receive any funds, directly or indirectly, to pay premiums on a personal benefit contract?	**7e**		X
f	Did the organization, during the year, pay premiums, directly or indirectly, on a personal benefit contract?	**7f**		X
g	If the organization received a contribution of qualified intellectual property, did the organization file Form 8899 as required?	**7g**		
h	If the organization received a contribution of cars, boats, airplanes, or other vehicles, did the organization file a Form 1098-C?	**7h**		
8	**Sponsoring organizations maintaining donor advised funds.** Did a donor advised fund maintained by the sponsoring organization have excess business holdings at any time during the year?	**8**		
9	**Sponsoring organizations maintaining donor advised funds.**			
a	Did the sponsoring organization make any taxable distributions under section 4966?	**9a**		
b	Did the sponsoring organization make a distribution to a donor, donor advisor, or related person?	**9b**		
10	**Section 501(c)(7) organizations.** Enter:			
a	Initiation fees and capital contributions included on Part VIII, line 12 **10a**			
b	Gross receipts, included on Form 990, Part VIII, line 12, for public use of club facilities **10b**			
11	**Section 501(c)(12) organizations.** Enter:			
a	Gross income from members or shareholders **11a**			
b	Gross income from other sources (Do not net amounts due or paid to other sources against amounts due or received from them.) **11b**			
12a	**Section 4947(a)(1) non-exempt charitable trusts.** Is the organization filing Form 990 in lieu of Form 1041?	**12a**		
b	If "Yes," enter the amount of tax-exempt interest received or accrued during the year **12b**			
13	**Section 501(c)(29) qualified nonprofit health insurance issuers.**			
a	Is the organization licensed to issue qualified health plans in more than one state? **Note:** See the instructions for additional information the organization must report on Schedule O.	**13a**		
b	Enter the amount of reserves the organization is required to maintain by the states in which the organization is licensed to issue qualified health plans **13b**			
c	Enter the amount of reserves on hand **13c**			
14a	Did the organization receive any payments for indoor tanning services during the tax year?	**14a**		X
b	If "Yes," has it filed a Form 720 to report these payments? *If "No," provide an explanation on Schedule O*	**14b**		
15	Is the organization subject to the section 4960 tax on payment(s) of more than $1,000,000 in remuneration or excess parachute payment(s) during the year? If "Yes," see instructions and file Form 4720, Schedule N.	**15**		X
16	Is the organization an educational institution subject to the section 4968 excise tax on net investment income? If "Yes," complete Form 4720, Schedule O.	**16**		X

Part VI Governance, Management, and Disclosure *For each "Yes" response to lines 2 through 7b below, and for a "No" response to line 8a, 8b, or 10b below, describe the circumstances, processes, or changes on Schedule O. See instructions.*

Check if Schedule O contains a response or note to any line in this Part VI X

Section A. Governing Body and Management

				Yes	No
1a	Enter the number of voting members of the governing body at the end of the tax year	1a	4		
	If there are material differences in voting rights among members of the governing body, or if the governing body delegated broad authority to an executive committee or similar committee, explain on Schedule O.				
b	Enter the number of voting members included on line 1a, above, who are independent	1b	4		
2	Did any officer, director, trustee, or key employee have a family relationship or a business relationship with any other officer, director, trustee, or key employee?	2			X
3	Did the organization delegate control over management duties customarily performed by or under the direct supervision of officers, directors, trustees, or key employees to a management company or other person?	3			X
4	Did the organization make any significant changes to its governing documents since the prior Form 990 was filed?	4			X
5	Did the organization become aware during the year of a significant diversion of the organization's assets?	5			X
6	Did the organization have members or stockholders?	6			X
7a	Did the organization have members, stockholders, or other persons who had the power to elect or appoint one or more members of the governing body?	7a			X
b	Are any governance decisions of the organization reserved to (or subject to approval by) members, stockholders, or persons other than the governing body?	7b			X
8	Did the organization contemporaneously document the meetings held or written actions undertaken during the year by the following:				
a	The governing body?	8a		X	
b	Each committee with authority to act on behalf of the governing body?	8b			X
9	Is there any officer, director, trustee, or key employee listed in Part VII, Section A, who cannot be reached at the organization's mailing address? *If "Yes," provide the names and addresses on Schedule O*	9			X

Section B. Policies *(This Section B requests information about policies not required by the Internal Revenue Code.)*

			Yes	No
10a	Did the organization have local chapters, branches, or affiliates?	10a		X
b	If "Yes," did the organization have written policies and procedures governing the activities of such chapters, affiliates, and branches to ensure their operations are consistent with the organization's exempt purposes?	10b		
11a	Has the organization provided a complete copy of this Form 990 to all members of its governing body before filing the form?	11a	X	
b	Describe in Schedule O the process, if any, used by the organization to review this Form 990.			
12a	Did the organization have a written conflict of interest policy? *If "No," go to line 13*	12a	X	
b	Were officers, directors, or trustees, and key employees required to disclose annually interests that could give rise to conflicts?	12b	X	
c	Did the organization regularly and consistently monitor and enforce compliance with the policy? *If "Yes," describe in Schedule O how this was done*	12c		X
13	Did the organization have a written whistleblower policy?	13	X	
14	Did the organization have a written document retention and destruction policy?	14	X	
15	Did the process for determining compensation of the following persons include a review and approval by independent persons, comparability data, and contemporaneous substantiation of the deliberation and decision?			
a	The organization's CEO, Executive Director, or top management official	15a	X	
b	Other officers or key employees of the organization	15b		X
	If "Yes" to line 15a or 15b, describe the process in Schedule O (see instructions).			
16a	Did the organization invest in, contribute assets to, or participate in a joint venture or similar arrangement with a taxable entity during the year?	16a		X
b	If "Yes," did the organization follow a written policy or procedure requiring the organization to evaluate its participation in joint venture arrangements under applicable federal tax law, and take steps to safeguard the organization's exempt status with respect to such arrangements?	16b		

Section C. Disclosure

17 List the states with which a copy of this Form 990 is required to be filed ▶ NONE

18 Section 6104 requires an organization to make its Forms 1023 (1024 or 1024-A, if applicable), 990, and 990-T (Section 501(c)(3)s only) available for public inspection. Indicate how you made these available. Check all that apply.

☐ Own website ☐ Another's website ☒ Upon request ☐ Other *(explain on Schedule O)*

19 Describe on Schedule O whether (and if so, how) the organization made its governing documents, conflict of interest policy, and financial statements available to the public during the tax year.

20 State the name, address, and telephone number of the person who possesses the organization's books and records ▶

EIDE BAILLY LLP - (702) 304-0405
9139 W RUSSELL RD STE. 200, LAS VEGAS, NV 89148

Part VII Compensation of Officers, Directors, Trustees, Key Employees, Highest Compensated Employees, and Independent Contractors

Check if Schedule O contains a response or note to any line in this Part VII ☐

Section A. Officers, Directors, Trustees, Key Employees, and Highest Compensated Employees

1a Complete this table for all persons required to be listed. Report compensation for the calendar year ending with or within the organization's tax year.

- List all of the organization's **current** officers, directors, trustees (whether individuals or organizations), regardless of amount of compensation. Enter -0- in columns (D), (E), and (F) if no compensation was paid.
- List all of the organization's **current** key employees, if any. See instructions for definition of "key employee."
- List the organization's five **current** highest compensated employees (other than an officer, director, trustee, or key employee) who received reportable compensation (Box 5 of Form W-2 and/or Box 7 of Form 1099-MISC) of more than $100,000 from the organization and any related organizations.
- List all of the organization's **former** officers, key employees, and highest compensated employees who received more than $100,000 of reportable compensation from the organization and any related organizations.
- List all of the organization's **former directors or trustees** that received, in the capacity as a former director or trustee of the organization, more than $10,000 of reportable compensation from the organization and any related organizations.

See instructions for the order in which to list the persons above.

☐ Check this box if neither the organization nor any related organization compensated any current officer, director, or trustee.

(A) Name and title	(B) Average hours per week (list any hours for related organizations below line)	(C) Position (do not check more than one box, unless person is both an officer and a director/trustee)						(D) Reportable compensation from the organization (W-2/1099-MISC)	(E) Reportable compensation from related organizations (W-2/1099-MISC)	(F) Estimated amount of other compensation from the organization and related organizations
		Individual trustee or director	Institutional trustee	Officer	Key employee	Highest compensated employee	Former			
(1) FRANCISCO AGUILAR	2.00									
TREASURER		X		X				0.	0.	0.
(2) MILES DICKSON	2.00									
BOARD CHAIR & SECRETARY		X		X				0.	0.	0.
(3) NIKO CENTENO-MONROY	2.00									
DIRECTOR		X						0.	0.	0.
(4) MONICA MORADKHAN	2.00									
DIRECTOR		X						0.	0.	0.
(5) JANA WILCOX LAVIN	40.00									
PRESIDENT & EXECUTIVE DIRECTOR				X				145,860.	0.	0.

Part VII **Section A. Officers, Directors, Trustees, Key Employees, and Highest Compensated Employees** *(continued)*

(A) Name and title	(B) Average hours per week (list any hours for related organizations below line)	(C) Position (do not check more than one box, unless person is both an officer and a director/trustee)						(D) Reportable compensation from the organization (W-2/1099-MISC)	(E) Reportable compensation from related organizations (W-2/1099-MISC)	(F) Estimated amount of other compensation from the organization and related organizations
		Individual trustee or director	Institutional trustee	Officer	Key employee	Highest compensated employee	Former			
1b Subtotal ▶								145,860.	0.	0.
c Total from continuation sheets to Part VII, Section A ▶								0.	0.	0.
d Total (add lines 1b and 1c) ▶								145,860.	0.	0.

2 Total number of individuals (including but not limited to those listed above) who received more than $100,000 of reportable compensation from the organization ▶ 1

		Yes	No
3	Did the organization list any **former** officer, director, trustee, key employee, or highest compensated employee on line 1a? *If "Yes," complete Schedule J for such individual*		X
4	For any individual listed on line 1a, is the sum of reportable compensation and other compensation from the organization and related organizations greater than $150,000? *If "Yes," complete Schedule J for such individual*		X
5	Did any person listed on line 1a receive or accrue compensation from any unrelated organization or individual for services rendered to the organization? *If "Yes," complete Schedule J for such person*		X

Section B. Independent Contractors

1 Complete this table for your five highest compensated independent contractors that received more than $100,000 of compensation from the organization. Report compensation for the calendar year ending with or within the organization's tax year.

(A) Name and business address	(B) Description of services	(C) Compensation
NONE		

2 Total number of independent contractors (including but not limited to those listed above) who received more than $100,000 of compensation from the organization ▶ 0

Part VIII Statement of Revenue

Check if Schedule O contains a response or note to any line in this Part VIII ☐

			(A) Total revenue	(B) Related or exempt function revenue	(C) Unrelated business revenue	(D) Revenue excluded from tax under sections 512 - 514
Contributions, Gifts, Grants and Other Similar Amounts	1a Federated campaigns	1a				
	b Membership dues	1b				
	c Fundraising events	1c				
	d Related organizations	1d				
	e Government grants (contributions)	1e				
	f All other contributions, gifts, grants, and similar amounts not included above	1f	1,734.			
	g Noncash contributions included in lines 1a-1f	1g	$			
	h **Total.** Add lines 1a-1f		1,734.			
Program Service Revenue		Business Code				
	2a					
	b					
	c					
	d					
	e					
	f All other program service revenue					
	g **Total.** Add lines 2a-2f					
Other Revenue	3 Investment income (including dividends, interest, and other similar amounts)		4,202.			4,202.
	4 Income from investment of tax-exempt bond proceeds					
	5 Royalties					
		(i) Real	(ii) Personal			
	6a Gross rents 6a					
	b Less: rental expenses 6b					
	c Rental income or (loss) 6c					
	d Net rental income or (loss)					
		(i) Securities	(ii) Other			
	7a Gross amount from sales of assets other than inventory 7a		534.			
	b Less: cost or other basis and sales expenses 7b		0.			
	c Gain or (loss) 7c		534.			
	d Net gain or (loss)		534.			534.
	8a Gross income from fundraising events (not including $ _____ of contributions reported on line 1c). See Part IV, line 18 8a					
	b Less: direct expenses 8b					
	c Net income or (loss) from fundraising events					
	9a Gross income from gaming activities. See Part IV, line 19 9a					
	b Less: direct expenses 9b					
	c Net income or (loss) from gaming activities					
	10a Gross sales of inventory, less returns and allowances 10a					
	b Less: cost of goods sold 10b					
	c Net income or (loss) from sales of inventory					
Miscellaneous Revenue		Business Code				
	11a MISCELLANEOUS REVENUE	910009	3,854.	3,854.		
	b					
	c					
	d All other revenue					
	e **Total.** Add lines 11a-11d		3,854.			
	12 **Total revenue.** See instructions		10,324.	3,854.	0.	4,736.

Part IX Statement of Functional Expenses

Section 501(c)(3) and 501(c)(4) organizations must complete all columns. All other organizations must complete column (A).

Check if Schedule O contains a response or note to any line in this Part IX ☐

Do not include amounts reported on lines 6b, 7b, 8b, 9b, and 10b of Part VIII.	(A) Total expenses	(B) Program service expenses	(C) Management and general expenses	(D) Fundraising expenses
1 Grants and other assistance to domestic organizations and domestic governments. See Part IV, line 21	2,046,207.	2,046,207.		
2 Grants and other assistance to domestic individuals. See Part IV, line 22				
3 Grants and other assistance to foreign organizations, foreign governments, and foreign individuals. See Part IV, lines 15 and 16				
4 Benefits paid to or for members				
5 Compensation of current officers, directors, trustees, and key employees	88,625.		88,625.	
6 Compensation not included above to disqualified persons (as defined under section 4958(f)(1)) and persons described in section 4958(c)(3)(B)				
7 Other salaries and wages	235,002.	167,211.	12,138.	55,653.
8 Pension plan accruals and contributions (include section 401(k) and 403(b) employer contributions)	4,362.	2,022.	1,667.	673.
9 Other employee benefits	39,037.	18,097.	14,916.	6,024.
10 Payroll taxes	26,511.	12,290.	10,130.	4,091.
11 Fees for services (nonemployees):				
a Management				
b Legal				
c Accounting				
d Lobbying	30,000.		30,000.	
e Professional fundraising services. See Part IV, line 17				
f Investment management fees				
g Other. (If line 11g amount exceeds 10% of line 25, column (A) amount, list line 11g expenses on Sch O.)	276,506.	128,184.	105,656.	42,666.
12 Advertising and promotion	473.		473.	
13 Office expenses	9,714.	4,503.	3,712.	1,499.
14 Information technology	1,673.	777.	639.	257.
15 Royalties				
16 Occupancy	12,030.	5,577.	4,597.	1,856.
17 Travel	2,167.	1,005.	828.	334.
18 Payments of travel or entertainment expenses for any federal, state, or local public officials				
19 Conferences, conventions, and meetings				
20 Interest				
21 Payments to affiliates				
22 Depreciation, depletion, and amortization	5,184.	2,403.	1,981.	800.
23 Insurance	11,049.	5,122.	4,222.	1,705.
24 Other expenses. Itemize expenses not covered above (List miscellaneous expenses on line 24e. If line 24e amount exceeds 10% of line 25, column (A) amount, list line 24e expenses on Schedule O.)				
a COMMUNITY OUTREACH	2,074,434.	2,074,434.		
b DUES AND SUBCRIPTIONS	5,296.	2,455.	2,024.	817.
c MEALS	1,314.	609.	502.	203.
d PRINTING AND PUBLICATIO	109.	50.	42.	17.
e All other expenses				
25 **Total functional expenses.** Add lines 1 through 24e	4,869,693.	4,470,946.	282,152.	116,595.
26 **Joint costs.** Complete this line only if the organization reported in column (B) joint costs from a combined educational campaign and fundraising solicitation. Check here ▶ ☐ if following SOP 98-2 (ASC 958-720)				

Part X Balance Sheet

Check if Schedule O contains a response or note to any line in this Part X ☐

				(A) Beginning of year		(B) End of year
Assets	1	Cash - non-interest-bearing		8,299,256.	1	1,544,069.
	2	Savings and temporary cash investments			2	
	3	Pledges and grants receivable, net		0.	3	0.
	4	Accounts receivable, net			4	
	5	Loans and other receivables from any current or former officer, director, trustee, key employee, creator or founder, substantial contributor, or 35% controlled entity or family member of any of these persons			5	
	6	Loans and other receivables from other disqualified persons (as defined under section 4958(f)(1)), and persons described in section 4958(c)(3)(B)			6	
	7	Notes and loans receivable, net			7	
	8	Inventories for sale or use			8	
	9	Prepaid expenses and deferred charges		0.	9	0.
	10a	Land, buildings, and equipment: cost or other basis. Complete Part VI of Schedule D	10a 46,351.			
	b	Less: accumulated depreciation	10b 42,410.	7,719.	10c	3,941.
	11	Investments - publicly traded securities			11	
	12	Investments - other securities. See Part IV, line 11			12	3,919,202.
	13	Investments - program-related. See Part IV, line 11			13	
	14	Intangible assets		0.	14	0.
	15	Other assets. See Part IV, line 11		62,370.	15	1,250.
	16	**Total assets.** Add lines 1 through 15 (must equal line 33)		8,369,345.	16	5,468,462.
Liabilities	17	Accounts payable and accrued expenses		176,905.	17	27,962.
	18	Grants payable		855,000.	18	1,839,580.
	19	Deferred revenue			19	
	20	Tax-exempt bond liabilities			20	
	21	Escrow or custodial account liability. Complete Part IV of Schedule D			21	
	22	Loans and other payables to any current or former officer, director, trustee, key employee, creator or founder, substantial contributor, or 35% controlled entity or family member of any of these persons			22	
	23	Secured mortgages and notes payable to unrelated third parties			23	
	24	Unsecured notes and loans payable to unrelated third parties			24	89,466.
	25	Other liabilities (including federal income tax, payables to related third parties, and other liabilities not included on lines 17-24). Complete Part X of Schedule D		13,388.	25	44,069.
	26	**Total liabilities.** Add lines 17 through 25		1,045,293.	26	2,001,077.
Net Assets or Fund Balances		**Organizations that follow FASB ASC 958, check here ▶ ☒ and complete lines 27, 28, 32, and 33.**				
	27	Net assets without donor restrictions		433,935.	27	<561,890.>
	28	Net assets with donor restrictions		6,890,117.	28	4,029,275.
		Organizations that do not follow FASB ASC 958, check here ▶ ☐ and complete lines 29 through 33.				
	29	Capital stock or trust principal, or current funds			29	
	30	Paid-in or capital surplus, or land, building, or equipment fund			30	
	31	Retained earnings, endowment, accumulated income, or other funds			31	
	32	Total net assets or fund balances		7,324,052.	32	3,467,385.
	33	Total liabilities and net assets/fund balances		8,369,345.	33	5,468,462.

Form **990** (2019)

Part XI Reconciliation of Net Assets

Check if Schedule O contains a response or note to any line in this Part XI ☐

1	Total revenue (must equal Part VIII, column (A), line 12)	1	10,324.
2	Total expenses (must equal Part IX, column (A), line 25)	2	4,869,693.
3	Revenue less expenses. Subtract line 2 from line 1	3	<4,859,369.>
4	Net assets or fund balances at beginning of year (must equal Part X, line 32, column (A))	4	7,324,052.
5	Net unrealized gains (losses) on investments	5	
6	Donated services and use of facilities	6	
7	Investment expenses	7	
8	Prior period adjustments	8	1,002,702.
9	Other changes in net assets or fund balances (explain on Schedule O)	9	0.
10	Net assets or fund balances at end of year. Combine lines 3 through 9 (must equal Part X, line 32, column (B))	10	3,467,385.

Part XII Financial Statements and Reporting

Check if Schedule O contains a response or note to any line in this Part XII ☐

			Yes	No
1	Accounting method used to prepare the Form 990: ☐ Cash ☒ Accrual ☐ Other _____ If the organization changed its method of accounting from a prior year or checked "Other," explain in Schedule O.			
2a	Were the organization's financial statements compiled or reviewed by an independent accountant? If "Yes," check a box below to indicate whether the financial statements for the year were compiled or reviewed on a separate basis, consolidated basis, or both: ☐ Separate basis ☐ Consolidated basis ☐ Both consolidated and separate basis	2a		X
b	Were the organization's financial statements audited by an independent accountant? If "Yes," check a box below to indicate whether the financial statements for the year were audited on a separate basis, consolidated basis, or both: ☒ Separate basis ☐ Consolidated basis ☐ Both consolidated and separate basis	2b	X	
c	If "Yes" to line 2a or 2b, does the organization have a committee that assumes responsibility for oversight of the audit, review, or compilation of its financial statements and selection of an independent accountant? If the organization changed either its oversight process or selection process during the tax year, explain on Schedule O.	2c	X	
3a	As a result of a federal award, was the organization required to undergo an audit or audits as set forth in the Single Audit Act and OMB Circular A-133?	3a		X
b	If "Yes," did the organization undergo the required audit or audits? If the organization did not undergo the required audit or audits, explain why on Schedule O and describe any steps taken to undergo such audits	3b		

SCHEDULE A
(Form 990 or 990-EZ)

Department of the Treasury
Internal Revenue Service

Public Charity Status and Public Support

Complete if the organization is a section 501(c)(3) organization or a section 4947(a)(1) nonexempt charitable trust.
▶ Attach to Form 990 or Form 990-EZ.
▶ Go to www.irs.gov/Form990 for instructions and the latest information.

OMB No. 1545-0047

2019

Open to Public Inspection

Name of the organization
OPPORTUNITY 180

Employer identification number
61-1753910

Part I Reason for Public Charity Status (All organizations must complete this part.) See instructions.

The organization is not a private foundation because it is: (For lines 1 through 12, check only one box.)

1 ☐ A church, convention of churches, or association of churches described in **section 170(b)(1)(A)(i).**
2 ☐ A school described in **section 170(b)(1)(A)(ii).** (Attach Schedule E (Form 990 or 990-EZ).)
3 ☐ A hospital or a cooperative hospital service organization described in **section 170(b)(1)(A)(iii).**
4 ☐ A medical research organization operated in conjunction with a hospital described in **section 170(b)(1)(A)(iii).** Enter the hospital's name, city, and state: _____
5 ☐ An organization operated for the benefit of a college or university owned or operated by a governmental unit described in **section 170(b)(1)(A)(iv).** (Complete Part II.)
6 ☐ A federal, state, or local government or governmental unit described in **section 170(b)(1)(A)(v).**
7 ☒ An organization that normally receives a substantial part of its support from a governmental unit or from the general public described in **section 170(b)(1)(A)(vi).** (Complete Part II.)
8 ☐ A community trust described in **section 170(b)(1)(A)(vi).** (Complete Part II.)
9 ☐ An agricultural research organization described in **section 170(b)(1)(A)(ix)** operated in conjunction with a land-grant college or university or a non-land-grant college of agriculture (see instructions). Enter the name, city, and state of the college or university: _____
10 ☐ An organization that normally receives: (1) more than 33 1/3% of its support from contributions, membership fees, and gross receipts from activities related to its exempt functions - subject to certain exceptions, and (2) no more than 33 1/3% of its support from gross investment income and unrelated business taxable income (less section 511 tax) from businesses acquired by the organization after June 30, 1975. See **section 509(a)(2).** (Complete Part III.)
11 ☐ An organization organized and operated exclusively to test for public safety. See **section 509(a)(4).**
12 ☐ An organization organized and operated exclusively for the benefit of, to perform the functions of, or to carry out the purposes of one or more publicly supported organizations described in **section 509(a)(1)** or **section 509(a)(2)**. See **section 509(a)(3).** Check the box in lines 12a through 12d that describes the type of supporting organization and complete lines 12e, 12f, and 12g.

a ☐ **Type I.** A supporting organization operated, supervised, or controlled by its supported organization(s), typically by giving the supported organization(s) the power to regularly appoint or elect a majority of the directors or trustees of the supporting organization. **You must complete Part IV, Sections A and B.**
b ☐ **Type II.** A supporting organization supervised or controlled in connection with its supported organization(s), by having control or management of the supporting organization vested in the same persons that control or manage the supported organization(s). **You must complete Part IV, Sections A and C.**
c ☐ **Type III functionally integrated.** A supporting organization operated in connection with, and functionally integrated with, its supported organization(s) (see instructions). **You must complete Part IV, Sections A, D, and E.**
d ☐ **Type III non-functionally integrated.** A supporting organization operated in connection with its supported organization(s) that is not functionally integrated. The organization generally must satisfy a distribution requirement and an attentiveness requirement (see instructions). **You must complete Part IV, Sections A and D, and Part V.**
e ☐ Check this box if the organization received a written determination from the IRS that it is a Type I, Type II, Type III functionally integrated, or Type III non-functionally integrated supporting organization.
f Enter the number of supported organizations .....
g Provide the following information about the supported organization(s).

(i) Name of supported organization	(ii) EIN	(iii) Type of organization (described on lines 1-10 above (see instructions))	(iv) Is the organization listed in your governing document? Yes	(iv) No	(v) Amount of monetary support (see instructions)	(vi) Amount of other support (see instructions)
Total						

Part II Support Schedule for Organizations Described in Sections 170(b)(1)(A)(iv) and 170(b)(1)(A)(vi)

(Complete only if you checked the box on line 5, 7, or 8 of Part I or if the organization failed to qualify under Part III. If the organization fails to qualify under the tests listed below, please complete Part III.)

Section A. Public Support

Calendar year (or fiscal year beginning in) ▶	(a) 2015	(b) 2016	(c) 2017	(d) 2018	(e) 2019	(f) Total
1 Gifts, grants, contributions, and membership fees received. (Do not include any "unusual grants.")	4100000.	8224110.	236,650.	9694516.	68,269.	22323545.
2 Tax revenues levied for the organization's benefit and either paid to or expended on its behalf						
3 The value of services or facilities furnished by a governmental unit to the organization without charge						
4 **Total.** Add lines 1 through 3	4100000.	8224110.	236,650.	9694516.	68,269.	22323545.
5 The portion of total contributions by each person (other than a governmental unit or publicly supported organization) included on line 1 that exceeds 2% of the amount shown on line 11, column (f)						5160335.
6 **Public support.** Subtract line 5 from line 4.						17163210.

Section B. Total Support

Calendar year (or fiscal year beginning in) ▶	(a) 2015	(b) 2016	(c) 2017	(d) 2018	(e) 2019	(f) Total
7 Amounts from line 4	4100000.	8224110.	236,650.	9694516.	68,269.	22323545.
8 Gross income from interest, dividends, payments received on securities loans, rents, royalties, and income from similar sources					4,202.	4,202.
9 Net income from unrelated business activities, whether or not the business is regularly carried on						
10 Other income. Do not include gain or loss from the sale of capital assets (Explain in Part VI.)						
11 **Total support.** Add lines 7 through 10						22327747.

12 Gross receipts from related activities, etc. (see instructions) ▶ 12

13 **First five years.** If the Form 990 is for the organization's first, second, third, fourth, or fifth tax year as a section 501(c)(3) organization, check this box and **stop here** ▶ ☐

Section C. Computation of Public Support Percentage

14 Public support percentage for 2019 (line 6, column (f) divided by line 11, column (f))	14	76.87 %
15 Public support percentage from 2018 Schedule A, Part II, line 14	15	76.88 %

16a **33 1/3% support test - 2019.** If the organization did not check the box on line 13, and line 14 is 33 1/3% or more, check this box and **stop here.** The organization qualifies as a publicly supported organization ▶ ☒

b **33 1/3% support test - 2018.** If the organization did not check a box on line 13 or 16a, and line 15 is 33 1/3% or more, check this box and **stop here.** The organization qualifies as a publicly supported organization ▶ ☐

17a **10% -facts-and-circumstances test - 2019.** If the organization did not check a box on line 13, 16a, or 16b, and line 14 is 10% or more, and if the organization meets the "facts-and-circumstances" test, check this box and **stop here.** Explain in Part VI how the organization meets the "facts-and-circumstances" test. The organization qualifies as a publicly supported organization ▶ ☐

b **10% -facts-and-circumstances test - 2018.** If the organization did not check a box on line 13, 16a, 16b, or 17a, and line 15 is 10% or more, and if the organization meets the "facts-and-circumstances" test, check this box and **stop here.** Explain in Part VI how the organization meets the "facts-and-circumstances" test. The organization qualifies as a publicly supported organization ▶ ☐

18 **Private foundation.** If the organization did not check a box on line 13, 16a, 16b, 17a, or 17b, check this box and see instructions ▶ ☐

Part III Support Schedule for Organizations Described in Section 509(a)(2)

(Complete only if you checked the box on line 10 of Part I or if the organization failed to qualify under Part II. If the organization fails to qualify under the tests listed below, please complete Part II.)

Section A. Public Support

Calendar year (or fiscal year beginning in) ▶	(a) 2015	(b) 2016	(c) 2017	(d) 2018	(e) 2019	(f) Total
1 Gifts, grants, contributions, and membership fees received. (Do not include any "unusual grants.")						
2 Gross receipts from admissions, merchandise sold or services performed, or facilities furnished in any activity that is related to the organization's tax-exempt purpose						
3 Gross receipts from activities that are not an unrelated trade or business under section 513						
4 Tax revenues levied for the organization's benefit and either paid to or expended on its behalf						
5 The value of services or facilities furnished by a governmental unit to the organization without charge						
6 **Total.** Add lines 1 through 5						
7a Amounts included on lines 1, 2, and 3 received from disqualified persons						
b Amounts included on lines 2 and 3 received from other than disqualified persons that exceed the greater of $5,000 or 1% of the amount on line 13 for the year						
c Add lines 7a and 7b						
8 **Public support.** (Subtract line 7c from line 6.)						

Section B. Total Support

Calendar year (or fiscal year beginning in) ▶	(a) 2015	(b) 2016	(c) 2017	(d) 2018	(e) 2019	(f) Total
9 Amounts from line 6						
10a Gross income from interest, dividends, payments received on securities loans, rents, royalties, and income from similar sources						
b Unrelated business taxable income (less section 511 taxes) from businesses acquired after June 30, 1975						
c Add lines 10a and 10b						
11 Net income from unrelated business activities not included in line 10b, whether or not the business is regularly carried on						
12 Other income. Do not include gain or loss from the sale of capital assets (Explain in Part VI.)						
13 **Total support.** (Add lines 9, 10c, 11, and 12.)						

14 **First five years.** If the Form 990 is for the organization's first, second, third, fourth, or fifth tax year as a section 501(c)(3) organization, check this box and **stop here** ▶ ☐

Section C. Computation of Public Support Percentage

15 Public support percentage for 2019 (line 8, column (f), divided by line 13, column (f))	15	%
16 Public support percentage from 2018 Schedule A, Part III, line 15	16	%

Section D. Computation of Investment Income Percentage

17 Investment income percentage for **2019** (line 10c, column (f), divided by line 13, column (f))	17	%
18 Investment income percentage from **2018** Schedule A, Part III, line 17	18	%

19a **33 1/3% support tests - 2019.** If the organization did not check the box on line 14, and line 15 is more than 33 1/3%, and line 17 is not more than 33 1/3%, check this box and **stop here.** The organization qualifies as a publicly supported organization ▶ ☐

b **33 1/3% support tests - 2018.** If the organization did not check a box on line 14 or line 19a, and line 16 is more than 33 1/3%, and line 18 is not more than 33 1/3%, check this box and **stop here.** The organization qualifies as a publicly supported organization ▶ ☐

20 **Private foundation.** If the organization did not check a box on line 14, 19a, or 19b, check this box and see instructions ▶ ☐

Part IV Supporting Organizations

(Complete only if you checked a box in line 12 on Part I. If you checked 12a of Part I, complete Sections A and B. If you checked 12b of Part I, complete Sections A and C. If you checked 12c of Part I, complete Sections A, D, and E. If you checked 12d of Part I, complete Sections A and D, and complete Part V.)

Section A. All Supporting Organizations

			Yes	No
1	Are all of the organization's supported organizations listed by name in the organization's governing documents? *If "No," describe in* **Part VI** *how the supported organizations are designated. If designated by class or purpose, describe the designation. If historic and continuing relationship, explain.*	1		
2	Did the organization have any supported organization that does not have an IRS determination of status under section 509(a)(1) or (2)? *If "Yes," explain in* **Part VI** *how the organization determined that the supported organization was described in section 509(a)(1) or (2).*	2		
3a	Did the organization have a supported organization described in section 501(c)(4), (5), or (6)? *If "Yes," answer (b) and (c) below.*	3a		
b	Did the organization confirm that each supported organization qualified under section 501(c)(4), (5), or (6) and satisfied the public support tests under section 509(a)(2)? *If "Yes," describe in* **Part VI** *when and how the organization made the determination.*	3b		
c	Did the organization ensure that all support to such organizations was used exclusively for section 170(c)(2)(B) purposes? *If "Yes," explain in* **Part VI** *what controls the organization put in place to ensure such use.*	3c		
4a	Was any supported organization not organized in the United States ("foreign supported organization")? *If "Yes," and if you checked 12a or 12b in Part I, answer (b) and (c) below.*	4a		
b	Did the organization have ultimate control and discretion in deciding whether to make grants to the foreign supported organization? *If "Yes," describe in* **Part VI** *how the organization had such control and discretion despite being controlled or supervised by or in connection with its supported organizations.*	4b		
c	Did the organization support any foreign supported organization that does not have an IRS determination under sections 501(c)(3) and 509(a)(1) or (2)? *If "Yes," explain in* **Part VI** *what controls the organization used to ensure that all support to the foreign supported organization was used exclusively for section 170(c)(2)(B) purposes.*	4c		
5a	Did the organization add, substitute, or remove any supported organizations during the tax year? *If "Yes," answer (b) and (c) below (if applicable). Also, provide detail in* **Part VI,** *including (i) the names and EIN numbers of the supported organizations added, substituted, or removed; (ii) the reasons for each such action; (iii) the authority under the organization's organizing document authorizing such action; and (iv) how the action was accomplished (such as by amendment to the organizing document).*	5a		
b	**Type I or Type II only.** Was any added or substituted supported organization part of a class already designated in the organization's organizing document?	5b		
c	**Substitutions only.** Was the substitution the result of an event beyond the organization's control?	5c		
6	Did the organization provide support (whether in the form of grants or the provision of services or facilities) to anyone other than (i) its supported organizations, (ii) individuals that are part of the charitable class benefited by one or more of its supported organizations, or (iii) other supporting organizations that also support or benefit one or more of the filing organization's supported organizations? *If "Yes," provide detail in* **Part VI.**	6		
7	Did the organization provide a grant, loan, compensation, or other similar payment to a substantial contributor (as defined in section 4958(c)(3)(C)), a family member of a substantial contributor, or a 35% controlled entity with regard to a substantial contributor? *If "Yes," complete Part I of Schedule L (Form 990 or 990-EZ).*	7		
8	Did the organization make a loan to a disqualified person (as defined in section 4958) not described in line 7? *If "Yes," complete Part I of Schedule L (Form 990 or 990-EZ).*	8		
9a	Was the organization controlled directly or indirectly at any time during the tax year by one or more disqualified persons as defined in section 4946 (other than foundation managers and organizations described in section 509(a)(1) or (2))? *If "Yes," provide detail in* **Part VI.**	9a		
b	Did one or more disqualified persons (as defined in line 9a) hold a controlling interest in any entity in which the supporting organization had an interest? *If "Yes," provide detail in* **Part VI.**	9b		
c	Did a disqualified person (as defined in line 9a) have an ownership interest in, or derive any personal benefit from, assets in which the supporting organization also had an interest? *If "Yes," provide detail in* **Part VI.**	9c		
10a	Was the organization subject to the excess business holdings rules of section 4943 because of section 4943(f) (regarding certain Type II supporting organizations, and all Type III non-functionally integrated supporting organizations)? *If "Yes," answer 10b below.*	10a		
b	Did the organization have any excess business holdings in the tax year? *(Use Schedule C, Form 4720, to determine whether the organization had excess business holdings.)*	10b		

Part IV Supporting Organizations *(continued)*

			Yes	No
11	Has the organization accepted a gift or contribution from any of the following persons?			
a	A person who directly or indirectly controls, either alone or together with persons described in (b) and (c) below, the governing body of a supported organization?	11a		
b	A family member of a person described in (a) above?	11b		
c	A 35% controlled entity of a person described in (a) or (b) above? *If "Yes" to a, b, or c, provide detail in* **Part VI.**	11c		

Section B. Type I Supporting Organizations

			Yes	No
1	Did the directors, trustees, or membership of one or more supported organizations have the power to regularly appoint or elect at least a majority of the organization's directors or trustees at all times during the tax year? *If "No," describe in* **Part VI** *how the supported organization(s) effectively operated, supervised, or controlled the organization's activities. If the organization had more than one supported organization, describe how the powers to appoint and/or remove directors or trustees were allocated among the supported organizations and what conditions or restrictions, if any, applied to such powers during the tax year.*	1		
2	Did the organization operate for the benefit of any supported organization other than the supported organization(s) that operated, supervised, or controlled the supporting organization? *If "Yes," explain in* **Part VI** *how providing such benefit carried out the purposes of the supported organization(s) that operated, supervised, or controlled the supporting organization.*	2		

Section C. Type II Supporting Organizations

			Yes	No
1	Were a majority of the organization's directors or trustees during the tax year also a majority of the directors or trustees of each of the organization's supported organization(s)? *If "No," describe in* **Part VI** *how control or management of the supporting organization was vested in the same persons that controlled or managed the supported organization(s).*	1		

Section D. All Type III Supporting Organizations

			Yes	No
1	Did the organization provide to each of its supported organizations, by the last day of the fifth month of the organization's tax year, (i) a written notice describing the type and amount of support provided during the prior tax year, (ii) a copy of the Form 990 that was most recently filed as of the date of notification, and (iii) copies of the organization's governing documents in effect on the date of notification, to the extent not previously provided?	1		
2	Were any of the organization's officers, directors, or trustees either (i) appointed or elected by the supported organization(s) or (ii) serving on the governing body of a supported organization? *If "No," explain in* **Part VI** *how the organization maintained a close and continuous working relationship with the supported organization(s).*	2		
3	By reason of the relationship described in (2), did the organization's supported organizations have a significant voice in the organization's investment policies and in directing the use of the organization's income or assets at all times during the tax year? *If "Yes," describe in* **Part VI** *the role the organization's supported organizations played in this regard.*	3		

Section E. Type III Functionally Integrated Supporting Organizations

1 *Check the box next to the method that the organization used to satisfy the Integral Part Test during the year* **(see instructions).**

a ☐ The organization satisfied the Activities Test. *Complete* **line 2** *below.*

b ☐ The organization is the parent of each of its supported organizations. *Complete* **line 3** *below.*

c ☐ The organization supported a governmental entity. *Describe in* **Part VI** *how you supported a government entity (see instructions).*

			Yes	No
2	Activities Test. **Answer (a) and (b) below.**			
a	Did substantially all of the organization's activities during the tax year directly further the exempt purposes of the supported organization(s) to which the organization was responsive? *If "Yes," then in* **Part VI identify those supported organizations and explain** *how these activities directly furthered their exempt purposes, how the organization was responsive to those supported organizations, and how the organization determined that these activities constituted substantially all of its activities.*	2a		
b	Did the activities described in (a) constitute activities that, but for the organization's involvement, one or more of the organization's supported organization(s) would have been engaged in? *If "Yes," explain in* **Part VI** *the reasons for the organization's position that its supported organization(s) would have engaged in these activities but for the organization's involvement.*	2b		
3	Parent of Supported Organizations. **Answer (a) and (b) below.**			
a	Did the organization have the power to regularly appoint or elect a majority of the officers, directors, or trustees of each of the supported organizations? *Provide details in* **Part VI.**	3a		
b	Did the organization exercise a substantial degree of direction over the policies, programs, and activities of each of its supported organizations? *If "Yes," describe in* **Part VI** *the role played by the organization in this regard.*	3b		

Part V Type III Non-Functionally Integrated 509(a)(3) Supporting Organizations

1 ☐ Check here if the organization satisfied the Integral Part Test as a qualifying trust on Nov. 20, 1970 (explain in Part VI). **See instructions.** All other Type III non-functionally integrated supporting organizations must complete Sections A through E.

Section A - Adjusted Net Income		(A) Prior Year	(B) Current Year (optional)
1 Net short-term capital gain	**1**		
2 Recoveries of prior-year distributions	**2**		
3 Other gross income (see instructions)	**3**		
4 Add lines 1 through 3.	**4**		
5 Depreciation and depletion	**5**		
6 Portion of operating expenses paid or incurred for production or collection of gross income or for management, conservation, or maintenance of property held for production of income (see instructions)	**6**		
7 Other expenses (see instructions)	**7**		
8 **Adjusted Net Income** (subtract lines 5, 6, and 7 from line 4)	**8**		

Section B - Minimum Asset Amount		(A) Prior Year	(B) Current Year (optional)
1 Aggregate fair market value of all non-exempt-use assets (see instructions for short tax year or assets held for part of year):			
a Average monthly value of securities	**1a**		
b Average monthly cash balances	**1b**		
c Fair market value of other non-exempt-use assets	**1c**		
d **Total** (add lines 1a, 1b, and 1c)	**1d**		
e **Discount** claimed for blockage or other factors (explain in detail in **Part VI**):			
2 Acquisition indebtedness applicable to non-exempt-use assets	**2**		
3 Subtract line 2 from line 1d.	**3**		
4 Cash deemed held for exempt use. Enter 1-1/2% of line 3 (for greater amount, see instructions).	**4**		
5 Net value of non-exempt-use assets (subtract line 4 from line 3)	**5**		
6 Multiply line 5 by .035.	**6**		
7 Recoveries of prior-year distributions	**7**		
8 **Minimum Asset Amount** (add line 7 to line 6)	**8**		

Section C - Distributable Amount			Current Year
1 Adjusted net income for prior year (from Section A, line 8, Column A)	**1**		
2 Enter 85% of line 1.	**2**		
3 Minimum asset amount for prior year (from Section B, line 8, Column A)	**3**		
4 Enter greater of line 2 or line 3.	**4**		
5 Income tax imposed in prior year	**5**		
6 **Distributable Amount.** Subtract line 5 from line 4, unless subject to emergency temporary reduction (see instructions).	**6**		

7 ☐ Check here if the current year is the organization's first as a non-functionally integrated Type III supporting organization (see instructions).

Schedule A (Form 990 or 990-EZ) 2019

Part V **Type III Non-Functionally Integrated 509(a)(3) Supporting Organizations** *(continued)*

Section D - Distributions		Current Year
1	Amounts paid to supported organizations to accomplish exempt purposes	
2	Amounts paid to perform activity that directly furthers exempt purposes of supported organizations, in excess of income from activity	
3	Administrative expenses paid to accomplish exempt purposes of supported organizations	
4	Amounts paid to acquire exempt-use assets	
5	Qualified set-aside amounts (prior IRS approval required)	
6	Other distributions (describe in **Part VI**). See instructions.	
7	**Total annual distributions.** Add lines 1 through 6.	
8	Distributions to attentive supported organizations to which the organization is responsive (provide details in **Part VI**). See instructions.	
9	Distributable amount for 2019 from Section C, line 6	
10	Line 8 amount divided by line 9 amount	

Section E - Distribution Allocations (see instructions)		(i) Excess Distributions	(ii) Underdistributions Pre-2019	(iii) Distributable Amount for 2019
1	Distributable amount for 2019 from Section C, line 6			
2	Underdistributions, if any, for years prior to 2019 (reasonable cause required- explain in **Part VI**). See instructions.			
3	Excess distributions carryover, if any, to 2019			
a	From 2014			
b	From 2015			
c	From 2016			
d	From 2017			
e	From 2018			
f	**Total** of lines 3a through e			
g	Applied to underdistributions of prior years			
h	Applied to 2019 distributable amount			
i	Carryover from 2014 not applied (see instructions)			
j	Remainder. Subtract lines 3g, 3h, and 3i from 3f.			
4	Distributions for 2019 from Section D, line 7: $			
a	Applied to underdistributions of prior years			
b	Applied to 2019 distributable amount			
c	Remainder. Subtract lines 4a and 4b from 4.			
5	Remaining underdistributions for years prior to 2019, if any. Subtract lines 3g and 4a from line 2. For result greater than zero, explain in **Part VI.** See instructions.			
6	Remaining underdistributions for 2019. Subtract lines 3h and 4b from line 1. For result greater than zero, explain in **Part VI**. See instructions.			
7	**Excess distributions carryover to 2020.** Add lines 3j and 4c.			
8	Breakdown of line 7:			
a	Excess from 2015			
b	Excess from 2016			
c	Excess from 2017			
d	Excess from 2018			
e	Excess from 2019			

Part VI **Supplemental Information.** Provide the explanations required by Part II, line 10; Part II, line 17a or 17b; Part III, line 12; Part IV, Section A, lines 1, 2, 3b, 3c, 4b, 4c, 5a, 6, 9a, 9b, 9c, 11a, 11b, and 11c; Part IV, Section B, lines 1 and 2; Part IV, Section C, line 1; Part IV, Section D, lines 2 and 3; Part IV, Section E, lines 1c, 2a, 2b, 3a, and 3b; Part V, line 1; Part V, Section B, line 1e; Part V, Section D, lines 5, 6, and 8; and Part V, Section E, lines 2, 5, and 6. Also complete this part for any additional information. (See instructions.)

SCHEDULE A, PART VI

THIS RETURN IS A SHORT YEAR RETURN IN ORDER TO HAVE CONSISTENT FILING

REQUIREMENTS WITH OTHER ENTITIES.

SCHEDULE C
(Form 990 or 990-EZ)

Department of the Treasury
Internal Revenue Service

Political Campaign and Lobbying Activities

For Organizations Exempt From Income Tax Under section 501(c) and section 527

▶ **Complete if the organization is described below.** ▶ **Attach to Form 990 or Form 990-EZ.**

▶ **Go to www.irs.gov/Form990 for instructions and the latest information.**

OMB No. 1545-0047

2019

Open to Public Inspection

If the organization answered "Yes," on Form 990, Part IV, line 3, or Form 990-EZ, Part V, line 46 (Political Campaign Activities), then

- Section 501(c)(3) organizations: Complete Parts I-A and B. Do not complete Part I-C.
- Section 501(c) (other than section 501(c)(3)) organizations: Complete Parts I-A and C below. Do not complete Part I-B.
- Section 527 organizations: Complete Part I-A only.

If the organization answered "Yes," on Form 990, Part IV, line 4, or Form 990-EZ, Part VI, line 47 (Lobbying Activities), then

- Section 501(c)(3) organizations that have filed Form 5768 (election under section 501(h)): Complete Part II-A. Do not complete Part II-B.
- Section 501(c)(3) organizations that have NOT filed Form 5768 (election under section 501(h)): Complete Part II-B. Do not complete Part II-A.

If the organization answered "Yes," on Form 990, Part IV, line 5 (Proxy Tax) (see separate instructions) or Form 990-EZ, Part V, line 35c (Proxy Tax) (see separate instructions), then

- Section 501(c)(4), (5), or (6) organizations: Complete Part III.

Name of organization	Employer identification number
OPPORTUNITY 180	61-1753910

Part I-A Complete if the organization is exempt under section 501(c) or is a section 527 organization.

1 Provide a description of the organization's direct and indirect political campaign activities in Part IV.

2 Political campaign activity expenditures ▶ $ 30,000.

3 Volunteer hours for political campaign activities

Part I-B Complete if the organization is exempt under section 501(c)(3).

1 Enter the amount of any excise tax incurred by the organization under section 4955 ▶ $

2 Enter the amount of any excise tax incurred by organization managers under section 4955 ▶ $

3 If the organization incurred a section 4955 tax, did it file Form 4720 for this year? ☐ Yes ☐ No

4a Was a correction made? ☐ Yes ☐ No

b If "Yes," describe in Part IV.

Part I-C Complete if the organization is exempt under section 501(c), except section 501(c)(3).

1 Enter the amount directly expended by the filing organization for section 527 exempt function activities ▶ $

2 Enter the amount of the filing organization's funds contributed to other organizations for section 527 exempt function activities ▶ $

3 Total exempt function expenditures. Add lines 1 and 2. Enter here and on Form 1120-POL, line 17b ▶ $

4 Did the filing organization file **Form 1120-POL** for this year? ☐ Yes ☐ No

5 Enter the names, addresses and employer identification number (EIN) of all section 527 political organizations to which the filing organization made payments. For each organization listed, enter the amount paid from the filing organization's funds. Also enter the amount of political contributions received that were promptly and directly delivered to a separate political organization, such as a separate segregated fund or a political action committee (PAC). If additional space is needed, provide information in Part IV.

(a) Name	**(b)** Address	**(c)** EIN	**(d)** Amount paid from filing organization's funds. If none, enter -0-.	**(e)** Amount of political contributions received and promptly and directly delivered to a separate political organization. If none, enter -0-.

Part II-A **Complete if the organization is exempt under section 501(c)(3) and filed Form 5768 (election under section 501(h)).**

A Check ▶ ☐ if the filing organization belongs to an affiliated group (and list in Part IV each affiliated group member's name, address, EIN, expenses, and share of excess lobbying expenditures).

B Check ▶ ☐ if the filing organization checked box A and "limited control" provisions apply.

Limits on Lobbying Expenditures (The term "expenditures" means amounts paid or incurred.)	(a) Filing organization's totals	(b) Affiliated group totals
1a Total lobbying expenditures to influence public opinion (grassroots lobbying)		
b Total lobbying expenditures to influence a legislative body (direct lobbying)		
c Total lobbying expenditures (add lines 1a and 1b)		
d Other exempt purpose expenditures		
e Total exempt purpose expenditures (add lines 1c and 1d)		
f Lobbying nontaxable amount. Enter the amount from the following table in both columns.		
g Grassroots nontaxable amount (enter 25% of line 1f)		
h Subtract line 1g from line 1a. If zero or less, enter -0-		
i Subtract line 1f from line 1c. If zero or less, enter -0-		

If the amount on line 1e, column (a) or (b) is:	The lobbying nontaxable amount is:
Not over $500,000	20% of the amount on line 1e.
Over $500,000 but not over $1,000,000	$100,000 plus 15% of the excess over $500,000.
Over $1,000,000 but not over $1,500,000	$175,000 plus 10% of the excess over $1,000,000.
Over $1,500,000 but not over $17,000,000	$225,000 plus 5% of the excess over $1,500,000.
Over $17,000,000	$1,000,000.

j If there is an amount other than zero on either line 1h or line 1i, did the organization file Form 4720 reporting section 4911 tax for this year? ☐ **Yes** ☐ **No**

4-Year Averaging Period Under Section 501(h)

(Some organizations that made a section 501(h) election do not have to complete all of the five columns below. See the separate instructions for lines 2a through 2f.)

Lobbying Expenditures During 4-Year Averaging Period

Calendar year (or fiscal year beginning in)	(a) 2016	(b) 2017	(c) 2018	(d) 2019	(e) Total
2a Lobbying nontaxable amount					
b Lobbying ceiling amount (150% of line 2a, column(e))					
c Total lobbying expenditures					
d Grassroots nontaxable amount					
e Grassroots ceiling amount (150% of line 2d, column (e))					
f Grassroots lobbying expenditures					

Part II-B **Complete if the organization is exempt under section 501(c)(3) and has NOT filed Form 5768 (election under section 501(h)).**

For each "Yes" response on lines 1a through 1i below, provide in Part IV a detailed description of the lobbying activity.	(a) Yes	(a) No	(b) Amount
1 During the year, did the filing organization attempt to influence foreign, national, state, or local legislation, including any attempt to influence public opinion on a legislative matter or referendum, through the use of:			
a Volunteers?	X		
b Paid staff or management (include compensation in expenses reported on lines 1c through 1i)?	X		
c Media advertisements?		X	
d Mailings to members, legislators, or the public?		X	
e Publications, or published or broadcast statements?		X	
f Grants to other organizations for lobbying purposes?		X	
g Direct contact with legislators, their staffs, government officials, or a legislative body?	X		30,000.
h Rallies, demonstrations, seminars, conventions, speeches, lectures, or any similar means?		X	
i Other activities?		X	
j Total. Add lines 1c through 1i			30,000.
2a Did the activities in line 1 cause the organization to be not described in section 501(c)(3)?		X	
b If "Yes," enter the amount of any tax incurred under section 4912			
c If "Yes," enter the amount of any tax incurred by organization managers under section 4912			
d If the filing organization incurred a section 4912 tax, did it file Form 4720 for this year?			

Part III-A **Complete if the organization is exempt under section 501(c)(4), section 501(c)(5), or section 501(c)(6).**

			Yes	No
1	Were substantially all (90% or more) dues received nondeductible by members?	1		
2	Did the organization make only in-house lobbying expenditures of $2,000 or less?	2		
3	Did the organization agree to carry over lobbying and political campaign activity expenditures from the prior year?	3		

Part III-B **Complete if the organization is exempt under section 501(c)(4), section 501(c)(5), or section 501(c)(6) and if either (a) BOTH Part III-A, lines 1 and 2, are answered "No" OR (b) Part III-A, line 3, is answered "Yes."**

1	Dues, assessments and similar amounts from members	1	
2	Section 162(e) nondeductible lobbying and political expenditures **(do not include amounts of political expenses for which the section 527(f) tax was paid).**		
a	Current year	2a	
b	Carryover from last year	2b	
c	Total	2c	
3	Aggregate amount reported in section 6033(e)(1)(A) notices of nondeductible section 162(e) dues	3	
4	If notices were sent and the amount on line 2c exceeds the amount on line 3, what portion of the excess does the organization agree to carryover to the reasonable estimate of nondeductible lobbying and political expenditure next year?	4	
5	Taxable amount of lobbying and political expenditures (see instructions)	5	

Part IV **Supplemental Information**

Provide the descriptions required for Part I-A, line 1; Part I-B, line 4; Part I-C, line 5; Part II-A (affiliated group list); Part II-A, lines 1 and 2 (see instructions); and Part II-B, line 1. Also, complete this part for any additional information.

PART II-B, LINE 1, LOBBYING ACTIVITIES:

TO ADVOCATE FOR OUR FIVE CORE STRATEGIES: MORE GREAT SCHOOLS,

ACCESSIBLE DATA, GREAT IDEAS (TALENT), GOOD GOVERNANCE AND ENGAGED

COMMUNITY.

TO ENSURE A POLICY LANDSCAPE THAT ENSURES THAT EVERY KID CAN HAVE

Part IV **Supplemental Information** *(continued)*

ACCESS TO A GREAT SCHOOL IN THEIR NEIGHBORHOOD BY ENSURING CHOICE OPTIONS ARE MADE AVAILABLE.

SCHEDULE D (Form 990)

Department of the Treasury
Internal Revenue Service

Supplemental Financial Statements

▶ Complete if the organization answered "Yes" on Form 990, Part IV, line 6, 7, 8, 9, 10, 11a, 11b, 11c, 11d, 11e, 11f, 12a, or 12b.
▶ Attach to Form 990.
▶ Go to www.irs.gov/Form990 for instructions and the latest information.

OMB No. 1545-0047

2019

Open to Public Inspection

Name of the organization
OPPORTUNITY 180

Employer identification number
61-1753910

Part I Organizations Maintaining Donor Advised Funds or Other Similar Funds or Accounts.

Complete if the organization answered "Yes" on Form 990, Part IV, line 6.

		(a) Donor advised funds	(b) Funds and other accounts
1	Total number at end of year		
2	Aggregate value of contributions to (during year)		
3	Aggregate value of grants from (during year)		
4	Aggregate value at end of year		

5 Did the organization inform all donors and donor advisors in writing that the assets held in donor advised funds are the organization's property, subject to the organization's exclusive legal control? ☐ Yes ☐ No

6 Did the organization inform all grantees, donors, and donor advisors in writing that grant funds can be used only for charitable purposes and not for the benefit of the donor or donor advisor, or for any other purpose conferring impermissible private benefit? ☐ Yes ☐ No

Part II Conservation Easements.

Complete if the organization answered "Yes" on Form 990, Part IV, line 7.

1 Purpose(s) of conservation easements held by the organization (check all that apply).

☐ Preservation of land for public use (for example, recreation or education)
☐ Preservation of a historically important land area
☐ Protection of natural habitat
☐ Preservation of a certified historic structure
☐ Preservation of open space

2 Complete lines 2a through 2d if the organization held a qualified conservation contribution in the form of a conservation easement on the last day of the tax year.

		Held at the End of the Tax Year
a	Total number of conservation easements 2a	
b	Total acreage restricted by conservation easements 2b	
c	Number of conservation easements on a certified historic structure included in (a) 2c	
d	Number of conservation easements included in (c) acquired after 7/25/06, and not on a historic structure listed in the National Register 2d	

3 Number of conservation easements modified, transferred, released, extinguished, or terminated by the organization during the tax year ▶ _____

4 Number of states where property subject to conservation easement is located ▶ _____

5 Does the organization have a written policy regarding the periodic monitoring, inspection, handling of violations, and enforcement of the conservation easements it holds? ☐ Yes ☐ No

6 Staff and volunteer hours devoted to monitoring, inspecting, handling of violations, and enforcing conservation easements during the year ▶ _____

7 Amount of expenses incurred in monitoring, inspecting, handling of violations, and enforcing conservation easements during the year ▶ $ _____

8 Does each conservation easement reported on line 2(d) above satisfy the requirements of section 170(h)(4)(B)(i) and section 170(h)(4)(B)(ii)? ☐ Yes ☐ No

9 In Part XIII, describe how the organization reports conservation easements in its revenue and expense statement and balance sheet, and include, if applicable, the text of the footnote to the organization's financial statements that describes the organization's accounting for conservation easements.

Part III Organizations Maintaining Collections of Art, Historical Treasures, or Other Similar Assets.

Complete if the organization answered "Yes" on Form 990, Part IV, line 8.

1a If the organization elected, as permitted under FASB ASC 958, not to report in its revenue statement and balance sheet works of art, historical treasures, or other similar assets held for public exhibition, education, or research in furtherance of public service, provide in Part XIII the text of the footnote to its financial statements that describes these items.

b If the organization elected, as permitted under FASB ASC 958, to report in its revenue statement and balance sheet works of art, historical treasures, or other similar assets held for public exhibition, education, or research in furtherance of public service, provide the following amounts relating to these items:

(i) Revenue included on Form 990, Part VIII, line 1 ▶ $ _____

(ii) Assets included in Form 990, Part X ▶ $ _____

2 If the organization received or held works of art, historical treasures, or other similar assets for financial gain, provide the following amounts required to be reported under FASB ASC 958 relating to these items:

a Revenue included on Form 990, Part VIII, line 1 ▶ $ _____

b Assets included in Form 990, Part X ▶ $ _____

Part III Organizations Maintaining Collections of Art, Historical Treasures, or Other Similar Assets *(continued)*

3 Using the organization's acquisition, accession, and other records, check any of the following that make significant use of its collection items (check all that apply):

a ☐ Public exhibition
b ☐ Scholarly research
c ☐ Preservation for future generations
d ☐ Loan or exchange program
e ☐ Other _____

4 Provide a description of the organization's collections and explain how they further the organization's exempt purpose in Part XIII.

5 During the year, did the organization solicit or receive donations of art, historical treasures, or other similar assets to be sold to raise funds rather than to be maintained as part of the organization's collection? ☐ Yes ☐ No

Part IV Escrow and Custodial Arrangements. Complete if the organization answered "Yes" on Form 990, Part IV, line 9, or reported an amount on Form 990, Part X, line 21.

1a Is the organization an agent, trustee, custodian or other intermediary for contributions or other assets not included on Form 990, Part X? ☐ Yes ☐ No

b If "Yes," explain the arrangement in Part XIII and complete the following table:

		Amount
c Beginning balance	1c	
d Additions during the year	1d	
e Distributions during the year	1e	
f Ending balance	1f	

2a Did the organization include an amount on Form 990, Part X, line 21, for escrow or custodial account liability? ☐ Yes ☐ No

b If "Yes," explain the arrangement in Part XIII. Check here if the explanation has been provided on Part XIII ☐

Part V Endowment Funds. Complete if the organization answered "Yes" on Form 990, Part IV, line 10.

	(a) Current year	(b) Prior year	(c) Two years back	(d) Three years back	(e) Four years back
1a Beginning of year balance					
b Contributions					
c Net investment earnings, gains, and losses					
d Grants or scholarships					
e Other expenditures for facilities and programs					
f Administrative expenses					
g End of year balance					

2 Provide the estimated percentage of the current year end balance (line 1g, column (a)) held as:

a Board designated or quasi-endowment ▶ _____%
b Permanent endowment ▶ _____%
c Term endowment ▶ _____%

The percentages on lines 2a, 2b, and 2c should equal 100%.

3a Are there endowment funds not in the possession of the organization that are held and administered for the organization by:

		Yes	No
(i) Unrelated organizations	3a(i)		
(ii) Related organizations	3a(ii)		
b If "Yes" on line 3a(ii), are the related organizations listed as required on Schedule R?	3b		

4 Describe in Part XIII the intended uses of the organization's endowment funds.

Part VI Land, Buildings, and Equipment.

Complete if the organization answered "Yes" on Form 990, Part IV, line 11a. See Form 990, Part X, line 10.

Description of property	(a) Cost or other basis (investment)	(b) Cost or other basis (other)	(c) Accumulated depreciation	(d) Book value
1a Land				
b Buildings				
c Leasehold improvements				
d Equipment		11,197.	7,256.	3,941.
e Other		35,154.	35,154.	0.
Total. Add lines 1a through 1e. *(Column (d) must equal Form 990, Part X, column (B), line 10c.)* ▶				3,941.

Part VII Investments - Other Securities.

Complete if the organization answered "Yes" on Form 990, Part IV, line 11b. See Form 990, Part X, line 12.

(a) Description of security or category (including name of security)	(b) Book value	(c) Method of valuation: Cost or end-of-year market value
(1) Financial derivatives		
(2) Closely held equity interests		
(3) Other		
(A) CHARLES SCHWAB	3,919,202.	COST
(B)		
(C)		
(D)		
(E)		
(F)		
(G)		
(H)		
Total. (Col. (b) must equal Form 990, Part X, col. (B) line 12.) ▶	3,919,202.	

Part VIII Investments - Program Related.

Complete if the organization answered "Yes" on Form 990, Part IV, line 11c. See Form 990, Part X, line 13.

(a) Description of investment	(b) Book value	(c) Method of valuation: Cost or end-of-year market value
(1)		
(2)		
(3)		
(4)		
(5)		
(6)		
(7)		
(8)		
(9)		
Total. (Col. (b) must equal Form 990, Part X, col. (B) line 13.) ▶		

Part IX Other Assets.

Complete if the organization answered "Yes" on Form 990, Part IV, line 11d. See Form 990, Part X, line 15.

(a) Description	(b) Book value
(1)	
(2)	
(3)	
(4)	
(5)	
(6)	
(7)	
(8)	
(9)	
Total. *(Column (b) must equal Form 990, Part X, col. (B) line 15.)* ▶	

Part X Other Liabilities.

Complete if the organization answered "Yes" on Form 990, Part IV, line 11e or 11f. See Form 990, Part X, line 25.

1. (a) Description of liability	(b) Book value
(1) Federal income taxes	
(2) PAYROLL LIABILITIES	44,069.
(3)	
(4)	
(5)	
(6)	
(7)	
(8)	
(9)	
Total. *(Column (b) must equal Form 990, Part X, col. (B) line 25.)* ▶	44,069.

2. Liability for uncertain tax positions. In Part XIII, provide the text of the footnote to the organization's financial statements that reports the organization's liability for uncertain tax positions under FASB ASC 740. Check here if the text of the footnote has been provided in Part XIII ☐

Part XI Reconciliation of Revenue per Audited Financial Statements With Revenue per Return.

Complete if the organization answered "Yes" on Form 990, Part IV, line 12a.

1	Total revenue, gains, and other support per audited financial statements			1	10,324.
2	Amounts included on line 1 but not on Form 990, Part VIII, line 12:				
a	Net unrealized gains (losses) on investments	2a			
b	Donated services and use of facilities	2b			
c	Recoveries of prior year grants	2c			
d	Other (Describe in Part XIII.)	2d			
e	Add lines **2a** through **2d**			2e	0.
3	Subtract line **2e** from line **1**			3	10,324.
4	Amounts included on Form 990, Part VIII, line 12, but not on line 1:				
a	Investment expenses not included on Form 990, Part VIII, line 7b	4a			
b	Other (Describe in Part XIII.)	4b			
c	Add lines **4a** and **4b**			4c	0.
5	Total revenue. Add lines **3** and **4c.** *(This must equal Form 990, Part I, line 12.)*			5	10,324.

Part XII Reconciliation of Expenses per Audited Financial Statements With Expenses per Return.

Complete if the organization answered "Yes" on Form 990, Part IV, line 12a.

1	Total expenses and losses per audited financial statements			1	4,869,693.
2	Amounts included on line 1 but not on Form 990, Part IX, line 25:				
a	Donated services and use of facilities	2a			
b	Prior year adjustments	2b			
c	Other losses	2c			
d	Other (Describe in Part XIII.)	2d			
e	Add lines **2a** through **2d**			2e	0.
3	Subtract line **2e** from line **1**			3	4,869,693.
4	Amounts included on Form 990, Part IX, line 25, but not on line 1:				
a	Investment expenses not included on Form 990, Part VIII, line 7b	4a			
b	Other (Describe in Part XIII.)	4b			
c	Add lines **4a** and **4b**			4c	0.
5	Total expenses. Add lines **3** and **4c.** *(This must equal Form 990, Part I, line 18.)*			5	4,869,693.

Part XIII Supplemental Information.

Provide the descriptions required for Part II, lines 3, 5, and 9; Part III, lines 1a and 4; Part IV, lines 1b and 2b; Part V, line 4; Part X, line 2; Part XI, lines 2d and 4b; and Part XII, lines 2d and 4b. Also complete this part to provide any additional information.

SCHEDULE I (Form 990)

Department of the Treasury
Internal Revenue Service

Grants and Other Assistance to Organizations, Governments, and Individuals in the United States

Complete if the organization answered "Yes" on Form 990, Part IV, line 21 or 22.

▶ **Attach to Form 990.**

▶ **Go to www.irs.gov/Form990 for the latest information.**

OMB No. 1545-0047

2019

Open to Public Inspection

Name of the organization
OPPORTUNITY 180

Employer identification number
61-1753910

Part I General Information on Grants and Assistance

1 Does the organization maintain records to substantiate the amount of the grants or assistance, the grantees' eligibility for the grants or assistance, and the selection criteria used to award the grants or assistance? ..... [X] Yes [ ] No

2 Describe in Part IV the organization's procedures for monitoring the use of grant funds in the United States.

Part II Grants and Other Assistance to Domestic Organizations and Domestic Governments. Complete if the organization answered "Yes" on Form 990, Part IV, line 21, for any recipient that received more than $5,000. Part II can be duplicated if additional space is needed.

1 (a) Name and address of organization or government	(b) EIN	(c) IRC section (if applicable)	(d) Amount of cash grant	(e) Amount of non-cash assistance	(f) Method of valuation (book, FMV, appraisal, other)	(g) Description of noncash assistance	(h) Purpose of grant or assistance
BES INC 131 DARTMOUTH ST FL 3 BOSTON, MA 02116			8,500.	0.			PLANNING GRANT
DEMOCRACY PREP PUBLIC SCHOOLS 1767 PARK AVENUE, 3RD FLOOR NEW YORK, NY 10035	20-2629354	501(C)(3)	0.	61,120.	KELLY BLUE BOOK	TWO 12-PASSENGER BUSSES	COMMUNITY ENGAGEMENT GRANT
EDUCATION BOARD PARTNERS PO BOX 73215 WASHINGTON, DC 20056			5,000.	0.			PLANNING GRANT
GIRLS ATHLETIC LEADERSHIP SCHOOL OF LV - 920 COTTAGE GROVE AVE - LAS VEGAS, NV 89119			59,580.	0.			PLANNING GRANT
LAS VEGAS COLLEGIATE CHARTER SCHOOL - 9900 W ISAAC NEWTON WAY - LAS VEGAS, NV 89119			100,000.	0.			PLANNING GRANT
NEVADA PREPARATORY CHARTER 2550 E DESERT INN RD, #240 LAS VEGAS, NV 89121	32-0511761	501(C)(3)	100,000.	0.			FACILITY GRANT

2 Enter total number of section 501(c)(3) and government organizations listed in the line 1 table ..... ▶ 7.

3 Enter total number of other organizations listed in the line 1 table ..... ▶ 7.

Part II **Continuation of Grants and Other Assistance to Governments and Organizations in the United States** (Schedule I (Form 990), Part II.)

(a) Name and address of organization or government	(b) EIN	(c) IRC section if applicable	(d) Amount of cash grant	(e) Amount of non-cash assistance	(f) Method of valuation (book, FMV, appraisal, other)	(g) Description of non-cash assistance	(h) Purpose of grant or assistance
NWEA 121 NW EVERETT ST PORTLAND, OR 97209			1,710,000.	0.			PLANNING GRANT

Part III **Grants and Other Assistance to Domestic Individuals.** Complete if the organization answered "Yes" on Form 990, Part IV, line 22. Part III can be duplicated if additional space is needed.

(a) Type of grant or assistance	(b) Number of recipients	(c) Amount of cash grant	(d) Amount of non-cash assistance	(e) Method of valuation (book, FMV, appraisal, other)	(f) Description of noncash assistance

Part IV **Supplemental Information.** Provide the information required in Part I, line 2; Part III, column (b); and any other additional information.

PART I, LINE 2:

ALL GRANTED FUNDS REQUIRE ONGOING REPORTING TO ENSURE ACCOUNTABILITY.

REPORTING FREQUENCY VARIES DEPENDENT ON THE NATURE OF THE GRANT AND

FUNDING. OPPORTUNITY 180 WILL FOLLOW-UP WITH GRANT RECIPIENTS WHEN

DEADLINES ARE APPROACHING. OPPORTUNITY 180 REVIEWS GRANT REPORTS TO MONITOR

PROGRESS.

SCHEDULE O
(Form 990 or 990-EZ)

Department of the Treasury
Internal Revenue Service

Supplemental Information to Form 990 or 990-EZ

Complete to provide information for responses to specific questions on Form 990 or 990-EZ or to provide any additional information.
▶ Attach to Form 990 or 990-EZ.
▶ Go to www.irs.gov/Form990 for the latest information.

OMB No. 1545-0047

2019

Open to Public Inspection

Name of the organization
OPPORTUNITY 180

Employer identification number
61-1753910

FORM 990, PART III, LINE 1, DESCRIPTION OF ORGANIZATION MISSION:

AND SUPPORT HIGH-PERFORMING SCHOOLS AND ORGANIZATIONS THAT WILL PROVIDE STUDENTS WITH OUTSTANDING EDUCATIONAL OPPORTUNITIES, AND HELP PROVE THAT EVERY CHILD CAN ACHIEVE, REGARDLESS OF ETHNICITY, ZIP CODE OR FAMILY INCOME.

FORM 990, PART VI, SECTION A, LINE 8B:

THE ORGANIZATION DOES NOT HAVE ANY COMMITTEE WITH BROAD AUTHORITY TO ACT ON BEHALF OF THE BOARD.

FORM 990, PART VI, SECTION B, LINE 11B:

LINE 11B EXPLANATION - OPPORTUNITY 180 BOARD OF DIRECTORS WILL REVIEW THE PREPARED IRS FORM 990.

FORM 990, PART VI, SECTION B, LINE 15A:

THE BOARD OF DIRECTORS RETAINED AN OUTSIDE ORGANIZATION TO ANALYZE NONPROFIT SALARIES AND USED THE COMPENSATION ANALYSIS TO DETERMINE THE SALARY FOR THE CEO.

FORM 990, PART VI, SECTION C, LINE 19:

NO OTHER DOCUMENTS AVAILABLE TO THE PUBLIC.

DocuSign Envelope ID: 6CC5359C-FFD7-44A8-94D2-157F14C3A951

** PUBLIC DISCLOSURE COPY **

Return of Organization Exempt From Income Tax

Form **990**

Under section 501(c), 527, or 4947(a)(1) of the Internal Revenue Code (except private foundations)

▶ Do not enter social security numbers on this form as it may be made public.

▶ Go to www.irs.gov/Form990 for instructions and the latest information.

Department of the Treasury
Internal Revenue Service

OMB No. 1545-0047

2021

Open to Public Inspection

A For the 2021 calendar year, or tax year beginning JUL 1, 2021 and ending JUN 30, 2022

B Check if applicable:
- ☐ Address change
- ☐ Name change
- ☐ Initial return
- ☐ Final return/ terminated
- ☐ Amended return
- ☐ Application pending

C Name of organization: OPPORTUNITY 180

Doing business as:

Number and street (or P.O. box if mail is not delivered to street address): 11035 LAVENDER HILL DR, STE 160-180

Room/suite:

City or town, state or province, country, and ZIP or foreign postal code: LAS VEGAS, NV 89135

F Name and address of principal officer: JANA WILCOX LAVIN
SAME AS C ABOVE

D Employer identification number: 61-1753910

E Telephone number: 702-776-6086

G Gross receipts $: 17,994,787.

H(a) Is this a group return for subordinates? ☐ Yes ☒ No

H(b) Are all subordinates included? ☐ Yes ☐ No
If "No," attach a list. See instructions

H(c) Group exemption number ▶

I Tax-exempt status: ☒ 501(c)(3) ☐ 501(c) ( ) ◀ (insert no.) ☐ 4947(a)(1) or ☐ 527

J Website: ▶ OPPORTUNITY180.ORG

K Form of organization: ☒ Corporation ☐ Trust ☐ Association ☐ Other ▶

L Year of formation: 2014

M State of legal domicile: NV

Part I Summary

1 Briefly describe the organization's mission or most significant activities: TO PROVIDE STUDENTS WITH OUTSTANDING EDUCATIONAL OPPORTUNITIES

2 Check this box ▶ ☐ if the organization discontinued its operations or disposed of more than 25% of its net assets.

3	Number of voting members of the governing body (Part VI, line 1a)	3	6
4	Number of independent voting members of the governing body (Part VI, line 1b)	4	6
5	Total number of individuals employed in calendar year 2021 (Part V, line 2a)	5	14
6	Total number of volunteers (estimate if necessary)	6	6
7a	Total unrelated business revenue from Part VIII, column (C), line 12	7a	0.
b	Net unrelated business taxable income from Form 990-T, Part I, line 11	7b	0.

		Prior Year	Current Year
8	Contributions and grants (Part VIII, line 1h)	20,605,232.	13,662,536.
9	Program service revenue (Part VIII, line 2g)	0.	0.
10	Investment income (Part VIII, column (A), lines 3, 4, and 7d)	117,543.	214,369.
11	Other revenue (Part VIII, column (A), lines 5, 6d, 8c, 9c, 10c, and 11e)	0.	0.
12	Total revenue - add lines 8 through 11 (must equal Part VIII, column (A), line 12)	20,722,775.	13,876,905.
13	Grants and similar amounts paid (Part IX, column (A), lines 1-3)	914,962.	5,413,125.
14	Benefits paid to or for members (Part IX, column (A), line 4)	0.	0.
15	Salaries, other compensation, employee benefits (Part IX, column (A), lines 5-10)	804,052.	903,532.
16a	Professional fundraising fees (Part IX, column (A), line 11e)	0.	0.
b	Total fundraising expenses (Part IX, column (D), line 25) ▶ 121,929.		
17	Other expenses (Part IX, column (A), lines 11a-11d, 11f-24e)	9,131,982.	1,125,610.
18	Total expenses. Add lines 13-17 (must equal Part IX, column (A), line 25)	10,850,996.	7,442,267.
19	Revenue less expenses. Subtract line 18 from line 12	9,871,779.	6,434,638.

		Beginning of Current Year	End of Year
20	Total assets (Part X, line 16)	15,615,978.	19,995,394.
21	Total liabilities (Part X, line 26)	2,202,282.	868,695.
22	Net assets or fund balances. Subtract line 21 from line 20	13,413,696.	19,126,699.

Part II Signature Block

Under penalties of perjury, I declare that I have examined this return, including accompanying schedules and statements, and to the best of my knowledge and belief, it is true, correct, and complete. Declaration of preparer (other than officer) is based on all information of which preparer has any knowledge.

Sign Here

DocuSigned by: Jana Wilcox Lavin
Signature of officer

5/12/2023
Date

JANA WILCOX LAVIN, CEO
Type or print name and title

Paid Preparer Use Only

Print/Type preparer's name	Preparer's signature	Date	Check if self-employed	PTIN
JENNA BERTUCCELLI	JENNA BERTUCCELLI	05/11/23	☐	P01534744

Firm's name ▶ CLIFTONLARSONALLEN LLP — Firm's EIN ▶ 41-0746749

Firm's address ▶ 915 HIGHLAND POINTE DR., SUITE 300, ROSEVILLE, CA 95678 — Phone no. (916) 784-7800

May the IRS discuss this return with the preparer shown above? See instructions ☒ Yes ☐ No

Part III Statement of Program Service Accomplishments

Check if Schedule O contains a response or note to any line in this Part III X

1 Briefly describe the organization's mission:
WE BELIEVE THAT ALL CHILDREN DESERVE GREAT SCHOOLS. WE FIND IT UNACCEPTABLE THAT OVER 82,000 CHILDREN IN CLARK COUNTY ATTEND LOW-PERFORMING PUBLIC SCHOOLS AND ARE COMMITTED TO SOLVING THIS PROBLEM. AS A NONPROFIT ORGANIZATION, WE OFFER RESOURCES TO LAUNCH AND

2 Did the organization undertake any significant program services during the year which were not listed on the prior Form 990 or 990-EZ? ..... ☐ Yes ☒ No
If "Yes," describe these new services on Schedule O.

3 Did the organization cease conducting, or make significant changes in how it conducts, any program services? ..... ☐ Yes ☒ No
If "Yes," describe these changes on Schedule O.

4 Describe the organization's program service accomplishments for each of its three largest program services, as measured by expenses. Section 501(c)(3) and 501(c)(4) organizations are required to report the amount of grants and allocations to others, the total expenses, and revenue, if any, for each program service reported.

4a (Code: _____) (Expenses $ 6,681,875. including grants of $ 5,413,125.) (Revenue $ _____)
OPPORTUNITY 180 PROVIDED SUPPORT TO SCHOOL ORGANIZATIONS RELATED TO THEIR MISSION, LEADERSHIP DEVELOPMENT TO EDUCATORS, AND EXPANSION FOR SCHOOLS.

4b (Code: _____) (Expenses $ _____ including grants of $ _____) (Revenue $ _____)

4c (Code: _____) (Expenses $ _____ including grants of $ _____) (Revenue $ _____)

4d Other program services (Describe on Schedule O.)
(Expenses $ _____ including grants of $ _____) (Revenue $ _____)

4e Total program service expenses ▶ 6,681,875.

Part IV Checklist of Required Schedules

			Yes	No
1	Is the organization described in section 501(c)(3) or 4947(a)(1) (other than a private foundation)? *If "Yes," complete Schedule A*	1	X	
2	Is the organization required to complete *Schedule B, Schedule of Contributors*? See instructions	2	X	
3	Did the organization engage in direct or indirect political campaign activities on behalf of or in opposition to candidates for public office? *If "Yes," complete Schedule C, Part I*	3		X
4	**Section 501(c)(3) organizations.** Did the organization engage in lobbying activities, or have a section 501(h) election in effect during the tax year? *If "Yes," complete Schedule C, Part II*	4	X	
5	Is the organization a section 501(c)(4), 501(c)(5), or 501(c)(6) organization that receives membership dues, assessments, or similar amounts as defined in Rev. Proc. 98-19? *If "Yes," complete Schedule C, Part III*	5		X
6	Did the organization maintain any donor advised funds or any similar funds or accounts for which donors have the right to provide advice on the distribution or investment of amounts in such funds or accounts? *If "Yes," complete Schedule D, Part I*	6		X
7	Did the organization receive or hold a conservation easement, including easements to preserve open space, the environment, historic land areas, or historic structures? *If "Yes," complete Schedule D, Part II*	7		X
8	Did the organization maintain collections of works of art, historical treasures, or other similar assets? *If "Yes," complete Schedule D, Part III*	8		X
9	Did the organization report an amount in Part X, line 21, for escrow or custodial account liability, serve as a custodian for amounts not listed in Part X; or provide credit counseling, debt management, credit repair, or debt negotiation services? *If "Yes," complete Schedule D, Part IV*	9		X
10	Did the organization, directly or through a related organization, hold assets in donor-restricted endowments or in quasi endowments? *If "Yes," complete Schedule D, Part V*	10		X
11	If the organization's answer to any of the following questions is "Yes," then complete Schedule D, Parts VI, VII, VIII, IX, or X, as applicable.			
a	Did the organization report an amount for land, buildings, and equipment in Part X, line 10? *If "Yes," complete Schedule D, Part VI*	11a	X	
b	Did the organization report an amount for investments - other securities in Part X, line 12, that is 5% or more of its total assets reported in Part X, line 16? *If "Yes," complete Schedule D, Part VII*	11b	X	
c	Did the organization report an amount for investments - program related in Part X, line 13, that is 5% or more of its total assets reported in Part X, line 16? *If "Yes," complete Schedule D, Part VIII*	11c		X
d	Did the organization report an amount for other assets in Part X, line 15, that is 5% or more of its total assets reported in Part X, line 16? *If "Yes," complete Schedule D, Part IX*	11d		X
e	Did the organization report an amount for other liabilities in Part X, line 25? *If "Yes," complete Schedule D, Part X*	11e	X	
f	Did the organization's separate or consolidated financial statements for the tax year include a footnote that addresses the organization's liability for uncertain tax positions under FIN 48 (ASC 740)? *If "Yes," complete Schedule D, Part X*	11f		X
12a	Did the organization obtain separate, independent audited financial statements for the tax year? *If "Yes," complete Schedule D, Parts XI and XII*	12a	X	
b	Was the organization included in consolidated, independent audited financial statements for the tax year? *If "Yes," and if the organization answered "No" to line 12a, then completing Schedule D, Parts XI and XII is optional*	12b		X
13	Is the organization a school described in section 170(b)(1)(A)(ii)? *If "Yes," complete Schedule E*	13		X
14a	Did the organization maintain an office, employees, or agents outside of the United States?	14a		X
b	Did the organization have aggregate revenues or expenses of more than $10,000 from grantmaking, fundraising, business, investment, and program service activities outside the United States, or aggregate foreign investments valued at $100,000 or more? *If "Yes," complete Schedule F, Parts I and IV*	14b		X
15	Did the organization report on Part IX, column (A), line 3, more than $5,000 of grants or other assistance to or for any foreign organization? *If "Yes," complete Schedule F, Parts II and IV*	15		X
16	Did the organization report on Part IX, column (A), line 3, more than $5,000 of aggregate grants or other assistance to or for foreign individuals? *If "Yes," complete Schedule F, Parts III and IV*	16		X
17	Did the organization report a total of more than $15,000 of expenses for professional fundraising services on Part IX, column (A), lines 6 and 11e? *If "Yes," complete Schedule G, Part I.* See instructions	17		X
18	Did the organization report more than $15,000 total of fundraising event gross income and contributions on Part VIII, lines 1c and 8a? *If "Yes," complete Schedule G, Part II*	18		X
19	Did the organization report more than $15,000 of gross income from gaming activities on Part VIII, line 9a? *If "Yes," complete Schedule G, Part III*	19		X
20a	Did the organization operate one or more hospital facilities? *If "Yes," complete Schedule H*	20a		X
b	If "Yes" to line 20a, did the organization attach a copy of its audited financial statements to this return?	20b		
21	Did the organization report more than $5,000 of grants or other assistance to any domestic organization or domestic government on Part IX, column (A), line 1? *If "Yes," complete Schedule I, Parts I and II*	21	X	

Part IV Checklist of Required Schedules *(continued)*

			Yes	No
22	Did the organization report more than $5,000 of grants or other assistance to or for domestic individuals on Part IX, column (A), line 2? *If "Yes," complete Schedule I, Parts I and III*	22		X
23	Did the organization answer "Yes" to Part VII, Section A, line 3, 4, or 5, about compensation of the organization's current and former officers, directors, trustees, key employees, and highest compensated employees? *If "Yes," complete Schedule J*	23	X	
24a	Did the organization have a tax-exempt bond issue with an outstanding principal amount of more than $100,000 as of the last day of the year, that was issued after December 31, 2002? *If "Yes," answer lines 24b through 24d and complete Schedule K. If "No," go to line 25a*	24a		X
b	Did the organization invest any proceeds of tax-exempt bonds beyond a temporary period exception?	24b		
c	Did the organization maintain an escrow account other than a refunding escrow at any time during the year to defease any tax-exempt bonds?	24c		
d	Did the organization act as an "on behalf of" issuer for bonds outstanding at any time during the year?	24d		
25a	**Section 501(c)(3), 501(c)(4), and 501(c)(29) organizations.** Did the organization engage in an excess benefit transaction with a disqualified person during the year? *If "Yes," complete Schedule L, Part I*	25a		X
b	Is the organization aware that it engaged in an excess benefit transaction with a disqualified person in a prior year, and that the transaction has not been reported on any of the organization's prior Forms 990 or 990-EZ? *If "Yes," complete Schedule L, Part I*	25b		X
26	Did the organization report any amount on Part X, line 5 or 22, for receivables from or payables to any current or former officer, director, trustee, key employee, creator or founder, substantial contributor, or 35% controlled entity or family member of any of these persons? *If "Yes," complete Schedule L, Part II*	26		X
27	Did the organization provide a grant or other assistance to any current or former officer, director, trustee, key employee, creator or founder, substantial contributor or employee thereof, a grant selection committee member, or to a 35% controlled entity (including an employee thereof) or family member of any of these persons? *If "Yes," complete Schedule L, Part III*	27		X
28	Was the organization a party to a business transaction with one of the following parties (see the Schedule L, Part IV, instructions for applicable filing thresholds, conditions, and exceptions):			
a	A current or former officer, director, trustee, key employee, creator or founder, or substantial contributor? *If "Yes," complete Schedule L, Part IV*	28a		X
b	A family member of any individual described in line 28a? *If "Yes," complete Schedule L, Part IV*	28b		X
c	A 35% controlled entity of one or more individuals and/or organizations described in line 28a or 28b? *If "Yes," complete Schedule L, Part IV*	28c		X
29	Did the organization receive more than $25,000 in non-cash contributions? *If "Yes," complete Schedule M*	29		X
30	Did the organization receive contributions of art, historical treasures, or other similar assets, or qualified conservation contributions? *If "Yes," complete Schedule M*	30		X
31	Did the organization liquidate, terminate, or dissolve and cease operations? *If "Yes," complete Schedule N, Part I*	31		X
32	Did the organization sell, exchange, dispose of, or transfer more than 25% of its net assets? *If "Yes," complete Schedule N, Part II*	32		X
33	Did the organization own 100% of an entity disregarded as separate from the organization under Regulations sections 301.7701-2 and 301.7701-3? *If "Yes," complete Schedule R, Part I*	33		X
34	Was the organization related to any tax-exempt or taxable entity? *If "Yes," complete Schedule R, Part II, III, or IV, and Part V, line 1*	34		X
35a	Did the organization have a controlled entity within the meaning of section 512(b)(13)?	35a		X
b	If "Yes" to line 35a, did the organization receive any payment from or engage in any transaction with a controlled entity within the meaning of section 512(b)(13)? *If "Yes," complete Schedule R, Part V, line 2*	35b		
36	**Section 501(c)(3) organizations.** Did the organization make any transfers to an exempt non-charitable related organization? *If "Yes," complete Schedule R, Part V, line 2*	36		X
37	Did the organization conduct more than 5% of its activities through an entity that is not a related organization and that is treated as a partnership for federal income tax purposes? *If "Yes," complete Schedule R, Part VI*	37		X
38	Did the organization complete Schedule O and provide explanations on Schedule O for Part VI, lines 11b and 19? **Note:** All Form 990 filers are required to complete Schedule O	38	X	

Part V Statements Regarding Other IRS Filings and Tax Compliance

Check if Schedule O contains a response or note to any line in this Part V ☐

				Yes	No
1a	Enter the number reported in box 3 of Form 1096. Enter -0- if not applicable	1a	55		
b	Enter the number of Forms W-2G included on line 1a. Enter -0- if not applicable	1b	0		
c	Did the organization comply with backup withholding rules for reportable payments to vendors and reportable gaming (gambling) winnings to prize winners?	1c		X	

Part V Statements Regarding Other IRS Filings and Tax Compliance *(continued)*

			Yes	No
2a	Enter the number of employees reported on Form W-3, Transmittal of Wage and Tax Statements, filed for the calendar year ending with or within the year covered by this return	2a 14		
b	If at least one is reported on line 2a, did the organization file all required federal employment tax returns?	2b	X	
	Note: If the sum of lines 1a and 2a is greater than 250, you may be required to *e-file.* See instructions.			
3a	Did the organization have unrelated business gross income of $1,000 or more during the year?	3a		X
b	If "Yes," has it filed a Form 990-T for this year? *If "No" to line 3b, provide an explanation on Schedule O*	3b		
4a	At any time during the calendar year, did the organization have an interest in, or a signature or other authority over, a financial account in a foreign country (such as a bank account, securities account, or other financial account)?	4a		X
b	If "Yes," enter the name of the foreign country ▶			
	See instructions for filing requirements for FinCEN Form 114, Report of Foreign Bank and Financial Accounts (FBAR).			
5a	Was the organization a party to a prohibited tax shelter transaction at any time during the tax year?	5a		X
b	Did any taxable party notify the organization that it was or is a party to a prohibited tax shelter transaction?	5b		X
c	If "Yes" to line 5a or 5b, did the organization file Form 8886-T?	5c		
6a	Does the organization have annual gross receipts that are normally greater than $100,000, and did the organization solicit any contributions that were not tax deductible as charitable contributions?	6a		X
b	If "Yes," did the organization include with every solicitation an express statement that such contributions or gifts were not tax deductible?	6b		
7	**Organizations that may receive deductible contributions under section 170(c).**			
a	Did the organization receive a payment in excess of $75 made partly as a contribution and partly for goods and services provided to the payor?	7a		X
b	If "Yes," did the organization notify the donor of the value of the goods or services provided?	7b		
c	Did the organization sell, exchange, or otherwise dispose of tangible personal property for which it was required to file Form 8282?	7c		X
d	If "Yes," indicate the number of Forms 8282 filed during the year 7d			
e	Did the organization receive any funds, directly or indirectly, to pay premiums on a personal benefit contract?	7e		X
f	Did the organization, during the year, pay premiums, directly or indirectly, on a personal benefit contract?	7f		X
g	If the organization received a contribution of qualified intellectual property, did the organization file Form 8899 as required?	7g		
h	If the organization received a contribution of cars, boats, airplanes, or other vehicles, did the organization file a Form 1098-C?	7h		
8	**Sponsoring organizations maintaining donor advised funds.** Did a donor advised fund maintained by the sponsoring organization have excess business holdings at any time during the year?	8		
9	**Sponsoring organizations maintaining donor advised funds.**			
a	Did the sponsoring organization make any taxable distributions under section 4966?	9a		
b	Did the sponsoring organization make a distribution to a donor, donor advisor, or related person?	9b		
10	**Section 501(c)(7) organizations.** Enter:			
a	Initiation fees and capital contributions included on Part VIII, line 12 10a			
b	Gross receipts, included on Form 990, Part VIII, line 12, for public use of club facilities 10b			
11	**Section 501(c)(12) organizations.** Enter:			
a	Gross income from members or shareholders 11a			
b	Gross income from other sources. (Do not net amounts due or paid to other sources against amounts due or received from them.) 11b			
12a	**Section 4947(a)(1) non-exempt charitable trusts.** Is the organization filing Form 990 in lieu of Form 1041?	12a		
b	If "Yes," enter the amount of tax-exempt interest received or accrued during the year 12b			
13	**Section 501(c)(29) qualified nonprofit health insurance issuers.**			
a	Is the organization licensed to issue qualified health plans in more than one state?	13a		
	Note: See the instructions for additional information the organization must report on Schedule O.			
b	Enter the amount of reserves the organization is required to maintain by the states in which the organization is licensed to issue qualified health plans 13b			
c	Enter the amount of reserves on hand 13c			
14a	Did the organization receive any payments for indoor tanning services during the tax year?	14a		X
b	If "Yes," has it filed a Form 720 to report these payments? *If "No," provide an explanation on Schedule O*	14b		
15	Is the organization subject to the section 4960 tax on payment(s) of more than $1,000,000 in remuneration or excess parachute payment(s) during the year? If "Yes," see the instructions and file Form 4720, Schedule N.	15		X
16	Is the organization an educational institution subject to the section 4968 excise tax on net investment income? If "Yes," complete Form 4720, Schedule O.	16		X
17	**Section 501(c)(21) organizations.** Did the trust, any disqualified person, or mine operator engage in any activities that would result in the imposition of an excise tax under section 4951, 4952 or 4953? If "Yes," complete Form 6069.	17		

Part VI Governance, Management, and Disclosure. *For each "Yes" response to lines 2 through 7b below, and for a "No" response to line 8a, 8b, or 10b below, describe the circumstances, processes, or changes on Schedule O. See instructions.*

Check if Schedule O contains a response or note to any line in this Part VI X

Section A. Governing Body and Management

			Yes	No
1a	Enter the number of voting members of the governing body at the end of the tax year 1a	6		
	If there are material differences in voting rights among members of the governing body, or if the governing body delegated broad authority to an executive committee or similar committee, explain on Schedule O.			
b	Enter the number of voting members included on line 1a, above, who are independent 1b	6		
2	Did any officer, director, trustee, or key employee have a family relationship or a business relationship with any other officer, director, trustee, or key employee? 2			X
3	Did the organization delegate control over management duties customarily performed by or under the direct supervision of officers, directors, trustees, or key employees to a management company or other person? 3			X
4	Did the organization make any significant changes to its governing documents since the prior Form 990 was filed? 4			X
5	Did the organization become aware during the year of a significant diversion of the organization's assets? 5			X
6	Did the organization have members or stockholders? 6			X
7a	Did the organization have members, stockholders, or other persons who had the power to elect or appoint one or more members of the governing body? 7a			X
b	Are any governance decisions of the organization reserved to (or subject to approval by) members, stockholders, or persons other than the governing body? 7b			X
8	Did the organization contemporaneously document the meetings held or written actions undertaken during the year by the following:			
a	The governing body? 8a		X	
b	Each committee with authority to act on behalf of the governing body? 8b			X
9	Is there any officer, director, trustee, or key employee listed in Part VII, Section A, who cannot be reached at the organization's mailing address? *If "Yes," provide the names and addresses on Schedule O* 9			X

Section B. Policies *(This Section B requests information about policies not required by the Internal Revenue Code.)*

			Yes	No
10a	Did the organization have local chapters, branches, or affiliates? 10a			X
b	If "Yes," did the organization have written policies and procedures governing the activities of such chapters, affiliates, and branches to ensure their operations are consistent with the organization's exempt purposes? 10b			
11a	Has the organization provided a complete copy of this Form 990 to all members of its governing body before filing the form? 11a		X	
b	Describe on Schedule O the process, if any, used by the organization to review this Form 990.			
12a	Did the organization have a written conflict of interest policy? *If "No," go to line 13* 12a		X	
b	Were officers, directors, or trustees, and key employees required to disclose annually interests that could give rise to conflicts? 12b		X	
c	Did the organization regularly and consistently monitor and enforce compliance with the policy? *If "Yes," describe on Schedule O how this was done* 12c			X
13	Did the organization have a written whistleblower policy? 13		X	
14	Did the organization have a written document retention and destruction policy? 14		X	
15	Did the process for determining compensation of the following persons include a review and approval by independent persons, comparability data, and contemporaneous substantiation of the deliberation and decision?			
a	The organization's CEO, Executive Director, or top management official 15a		X	
b	Other officers or key employees of the organization 15b			X
	If "Yes" to line 15a or 15b, describe the process on Schedule O. See instructions.			
16a	Did the organization invest in, contribute assets to, or participate in a joint venture or similar arrangement with a taxable entity during the year? 16a			X
b	If "Yes," did the organization follow a written policy or procedure requiring the organization to evaluate its participation in joint venture arrangements under applicable federal tax law, and take steps to safeguard the organization's exempt status with respect to such arrangements? 16b			

Section C. Disclosure

17 List the states with which a copy of this Form 990 is required to be filed ▶ NONE

18 Section 6104 requires an organization to make its Forms 1023 (1024 or 1024-A, if applicable), 990, and 990-T (section 501(c)(3)s only) available for public inspection. Indicate how you made these available. Check all that apply.

☐ Own website ☐ Another's website ☒ Upon request ☐ Other *(explain on Schedule O)*

19 Describe on Schedule O whether (and if so, how) the organization made its governing documents, conflict of interest policy, and financial statements available to the public during the tax year.

20 State the name, address, and telephone number of the person who possesses the organization's books and records ▶

RAY FRASER - 702-776-6086

11035 LAVENDER HILL DR, STE 160-180, LAS VEGAS, NV 89135

Part VII Compensation of Officers, Directors, Trustees, Key Employees, Highest Compensated Employees, and Independent Contractors

Check if Schedule O contains a response or note to any line in this Part VII ☐

Section A. Officers, Directors, Trustees, Key Employees, and Highest Compensated Employees

1a Complete this table for all persons required to be listed. Report compensation for the calendar year ending with or within the organization's tax year.

- List all of the organization's **current** officers, directors, trustees (whether individuals or organizations), regardless of amount of compensation. Enter -0- in columns (D), (E), and (F) if no compensation was paid.
- List all of the organization's **current** key employees, if any. See the instructions for definition of "key employee."
- List the organization's five **current** highest compensated employees (other than an officer, director, trustee, or key employee) who received reportable compensation (box 5 of Form W-2, Form 1099-MISC, and/or box 1 of Form 1099-NEC) of more than $100,000 from the organization and any related organizations.
- List all of the organization's **former** officers, key employees, and highest compensated employees who received more than $100,000 of reportable compensation from the organization and any related organizations.
- List all of the organization's **former directors or trustees** that received, in the capacity as a former director or trustee of the organization, more than $10,000 of reportable compensation from the organization and any related organizations.

See the instructions for the order in which to list the persons above.

☐ Check this box if neither the organization nor any related organization compensated any current officer, director, or trustee.

(A) Name and title	(B) Average hours per week (list any hours for related organizations below line)	(C) Position (do not check more than one box, unless person is both an officer and a director/trustee)						(D) Reportable compensation from the organization (W-2/1099-MISC/ 1099-NEC)	(E) Reportable compensation from related organizations (W-2/1099-MISC/ 1099-NEC)	(F) Estimated amount of other compensation from the organization and related organizations
		Individual trustee or director	Institutional trustee	Officer	Key employee	Highest compensated employee	Former			
(1) JANA WILCOX LAVIN CHIEF EXECUTIVE OFFICER	40.00			X				197,625.	0.	5,929.
(2) TAMARA SHEAR CHIEF PROGRAM OFFICER	40.00					X		130,836.	0.	10,110.
(3) MILES DICKSON CHAIR	2.00	X		X				0.	0.	0.
(4) MONICA MORADKHAN TREASURUER	2.00	X		X				0.	0.	0.
(5) SEBERN COLEMAN BOARD MEMBER	2.00	X						0.	0.	0.
(6) PIPER OVERSTREET BOARD MEMBER	2.00	X						0.	0.	0.
(7) NICK PORTZ BOARD MEMBER	2.00	X						0.	0.	0.
(8) PAULA SNEED BOARD MEMBER	2.00	X						0.	0.	0.

Part VII Section A. Officers, Directors, Trustees, Key Employees, and Highest Compensated Employees *(continued)*

(A) Name and title	(B) Average hours per week (list any hours for related organizations below line)	(C) Position (do not check more than one box, unless person is both an officer and a director/trustee)						(D) Reportable compensation from the organization (W-2/1099-MISC/ 1099-NEC)	(E) Reportable compensation from related organizations (W-2/1099-MISC/ 1099-NEC)	(F) Estimated amount of other compensation from the organization and related organizations
		Individual trustee or director	Institutional trustee	Officer	Key employee	Highest compensated employee	Former			
1b Subtotal ▶								328,461.	0.	16,039.
c Total from continuation sheets to Part VII, Section A ▶								0.	0.	0.
d Total (add lines 1b and 1c) ▶								328,461.	0.	16,039.

2 Total number of individuals (including but not limited to those listed above) who received more than $100,000 of reportable compensation from the organization ▶ 2

		Yes	No
3 Did the organization list any **former** officer, director, trustee, key employee, or highest compensated employee on line 1a? *If "Yes," complete Schedule J for such individual*	3		X
4 For any individual listed on line 1a, is the sum of reportable compensation and other compensation from the organization and related organizations greater than $150,000? *If "Yes," complete Schedule J for such individual*	4	X	
5 Did any person listed on line 1a receive or accrue compensation from any unrelated organization or individual for services rendered to the organization? *If "Yes," complete Schedule J for such person*	5		X

Section B. Independent Contractors

1 Complete this table for your five highest compensated independent contractors that received more than $100,000 of compensation from the organization. Report compensation for the calendar year ending with or within the organization's tax year.

(A) Name and business address	(B) Description of services	(C) Compensation
BELLWEATHER , 517 BOSTON POST ROAD #171 , SUDBURY , MA 01776	STRATEGIC PLANNING	380,934.
KITAMBA INC. , 4320 WEST KENNEDY BOULEVARD , TAMPA, FL 33609	COMPACT DEVELOPMENT	240,000.
NATIONAL FELLOWSHIP OF BLACK AND LATINO MAL 1122 KENILWORTH DRIVE #201 , TOWSON, MD 212	FELLOWSHIP	135,350.

2 Total number of independent contractors (including but not limited to those listed above) who received more than $100,000 of compensation from the organization ▶ 3

Part VIII Statement of Revenue

Check if Schedule O contains a response or note to any line in this Part VIII ☐

				(A) Total revenue	(B) Related or exempt function revenue	(C) Unrelated business revenue	(D) Revenue excluded from tax under sections 512 - 514
Contributions, Gifts, Grants and Other Similar Amounts	1a	Federated campaigns	1a				
	b	Membership dues	1b				
	c	Fundraising events	1c				
	d	Related organizations	1d				
	e	Government grants (contributions)	1e	3,009,682.			
	f	All other contributions, gifts, grants, and similar amounts not included above	1f	10,652,854.			
	g	Noncash contributions included in lines 1a-1f	1g	$			
	h	**Total.** Add lines 1a-1f			13,662,536.		
Program Service Revenue			Business Code				
	2a						
	b						
	c						
	d						
	e						
	f	All other program service revenue					
	g	**Total.** Add lines 2a-2f					
Other Revenue	3	Investment income (including dividends, interest, and other similar amounts)			279,581.			279,581.
	4	Income from investment of tax-exempt bond proceeds						
	5	Royalties						
				(i) Real	(ii) Personal			
	6a	Gross rents	6a					
	b	Less: rental expenses	6b					
	c	Rental income or (loss)	6c					
	d	Net rental income or (loss)						
				(i) Securities	(ii) Other			
	7a	Gross amount from sales of assets other than inventory	7a	4,052,020.	650.			
	b	Less: cost or other basis and sales expenses	7b	4,117,882.	0.			
	c	Gain or (loss)	7c	-65,862.	650.			
	d	Net gain or (loss)				-65,212.		-65,212.
	8a	Gross income from fundraising events (not including $ _____ of contributions reported on line 1c). See Part IV, line 18	8a					
	b	Less: direct expenses	8b					
	c	Net income or (loss) from fundraising events						
	9a	Gross income from gaming activities. See Part IV, line 19	9a					
	b	Less: direct expenses	9b					
	c	Net income or (loss) from gaming activities						
	10a	Gross sales of inventory, less returns and allowances	10a					
	b	Less: cost of goods sold	10b					
	c	Net income or (loss) from sales of inventory						
Miscellaneous Revenue			Business Code					
	11a							
	b							
	c							
	d	All other revenue						
	e	**Total.** Add lines 11a-11d						
	12	**Total revenue.** See instructions			13,876,905.	0.	0.	214,369.

Part IX Statement of Functional Expenses

Section 501(c)(3) and 501(c)(4) organizations must complete all columns. All other organizations must complete column (A).

Check if Schedule O contains a response or note to any line in this Part IX ☐

Do not include amounts reported on lines 6b, 7b, 8b, 9b, and 10b of Part VIII.	(A) Total expenses	(B) Program service expenses	(C) Management and general expenses	(D) Fundraising expenses
1 Grants and other assistance to domestic organizations and domestic governments. See Part IV, line 21	5,413,125.	5,413,125.		
2 Grants and other assistance to domestic individuals. See Part IV, line 22				
3 Grants and other assistance to foreign organizations, foreign governments, and foreign individuals. See Part IV, lines 15 and 16				
4 Benefits paid to or for members				
5 Compensation of current officers, directors, trustees, and key employees	206,010.	144,866.	37,844.	23,300.
6 Compensation not included above to disqualified persons (as defined under section 4958(f)(1)) and persons described in section 4958(c)(3)(B)				
7 Other salaries and wages	568,739.	399,937.	104,477.	64,325.
8 Pension plan accruals and contributions (include section 401(k) and 403(b) employer contributions)	10,440.	7,342.	1,918.	1,180.
9 Other employee benefits	60,142.	42,292.	11,048.	6,802.
10 Payroll taxes	58,201.	40,926.	10,692.	6,583.
11 Fees for services (nonemployees):				
a Management				
b Legal	9,306.		9,306.	
c Accounting	48,087.		48,087.	
d Lobbying	22,500.		22,500.	
e Professional fundraising services. See Part IV, line 17				
f Investment management fees	28,291.		28,291.	
g Other. (If line 11g amount exceeds 10% of line 25, column (A), amount, list line 11g expenses on Sch O.)	328,830.		328,830.	
12 Advertising and promotion	3,412.		3,412.	
13 Office expenses	33,527.	23,576.	6,159.	3,792.
14 Information technology	5,632.	3,960.	1,035.	637.
15 Royalties				
16 Occupancy	37,336.	26,254.	6,859.	4,223.
17 Travel	33,665.	23,673.	6,184.	3,808.
18 Payments of travel or entertainment expenses for any federal, state, or local public officials				
19 Conferences, conventions, and meetings				
20 Interest				
21 Payments to affiliates				
22 Depreciation, depletion, and amortization	3,502.	2,463.	643.	396.
23 Insurance	16,221.	11,406.	2,980.	1,835.
24 Other expenses. Itemize expenses not covered above. (List miscellaneous expenses on line 24e. If line 24e amount exceeds 10% of line 25, column (A), amount, list line 24e expenses on Schedule O.)				
a COMMUNITY AND EDUCATION	510,674.	510,674.		
b DUES AND SUBSCRIPTIONS	24,622.	17,314.	4,523.	2,785.
c MEALS	18,160.	12,770.	3,336.	2,054.
d PRINTING AND PUBLICATIO	1,845.	1,297.	339.	209.
e All other expenses				
25 **Total functional expenses.** Add lines 1 through 24e	7,442,267.	6,681,875.	638,463.	121,929.
26 **Joint costs.** Complete this line only if the organization reported in column (B) joint costs from a combined educational campaign and fundraising solicitation. Check here ▶ ☐ if following SOP 98-2 (ASC 958-720)				

Part X Balance Sheet

Check if Schedule O contains a response or note to any line in this Part X ☐

				(A) Beginning of year		(B) End of year
Assets	1	Cash - non-interest-bearing		6,983,212.	1	4,780,181.
	2	Savings and temporary cash investments			2	2,800,997.
	3	Pledges and grants receivable, net		800,734.	3	3,809,425.
	4	Accounts receivable, net			4	
	5	Loans and other receivables from any current or former officer, director, trustee, key employee, creator or founder, substantial contributor, or 35% controlled entity or family member of any of these persons			5	
	6	Loans and other receivables from other disqualified persons (as defined under section 4958(f)(1)), and persons described in section 4958(c)(3)(B)			6	
	7	Notes and loans receivable, net			7	
	8	Inventories for sale or use			8	
	9	Prepaid expenses and deferred charges		6,669.	9	7,421.
	10a	Land, buildings, and equipment: cost or other basis. Complete Part VI of Schedule D	10a 46,335.			
	b	Less: accumulated depreciation	10b 43,489.	6,348.	10c	2,846.
	11	Investments - publicly traded securities			11	
	12	Investments - other securities. See Part IV, line 11		7,817,765.	12	8,590,450.
	13	Investments - program-related. See Part IV, line 11			13	
	14	Intangible assets			14	
	15	Other assets. See Part IV, line 11		1,250.	15	4,074.
	16	**Total assets.** Add lines 1 through 15 (must equal line 33)		15,615,978.	16	19,995,394.
Liabilities	17	Accounts payable and accrued expenses		180,315.	17	269,425.
	18	Grants payable		1,841,952.	18	583,039.
	19	Deferred revenue			19	
	20	Tax-exempt bond liabilities			20	
	21	Escrow or custodial account liability. Complete Part IV of Schedule D			21	
	22	Loans and other payables to any current or former officer, director, trustee, key employee, creator or founder, substantial contributor, or 35% controlled entity or family member of any of these persons			22	
	23	Secured mortgages and notes payable to unrelated third parties			23	
	24	Unsecured notes and loans payable to unrelated third parties			24	
	25	Other liabilities (including federal income tax, payables to related third parties, and other liabilities not included on lines 17-24). Complete Part X of Schedule D		180,015.	25	16,231.
	26	**Total liabilities.** Add lines 17 through 25		2,202,282.	26	868,695.
Net Assets or Fund Balances		**Organizations that follow FASB ASC 958, check here ▶ ☒ and complete lines 27, 28, 32, and 33.**				
	27	Net assets without donor restrictions		12,930,676.	27	15,800,255.
	28	Net assets with donor restrictions		483,020.	28	3,326,444.
		Organizations that do not follow FASB ASC 958, check here ▶ ☐ and complete lines 29 through 33.				
	29	Capital stock or trust principal, or current funds			29	
	30	Paid-in or capital surplus, or land, building, or equipment fund			30	
	31	Retained earnings, endowment, accumulated income, or other funds			31	
	32	Total net assets or fund balances		13,413,696.	32	19,126,699.
	33	Total liabilities and net assets/fund balances		15,615,978.	33	19,995,394.

Form **990** (2021)

Part XI Reconciliation of Net Assets

Check if Schedule O contains a response or note to any line in this Part XI ☐

1	Total revenue (must equal Part VIII, column (A), line 12)	1	13,876,905.
2	Total expenses (must equal Part IX, column (A), line 25)	2	7,442,267.
3	Revenue less expenses. Subtract line 2 from line 1	3	6,434,638.
4	Net assets or fund balances at beginning of year (must equal Part X, line 32, column (A))	4	13,413,696.
5	Net unrealized gains (losses) on investments	5	-721,635.
6	Donated services and use of facilities	6	
7	Investment expenses	7	
8	Prior period adjustments	8	
9	Other changes in net assets or fund balances (explain on Schedule O)	9	0.
10	Net assets or fund balances at end of year. Combine lines 3 through 9 (must equal Part X, line 32, column (B))	10	19,126,699.

Part XII Financial Statements and Reporting

Check if Schedule O contains a response or note to any line in this Part XII ☒

			Yes	No
1	Accounting method used to prepare the Form 990: ☐ Cash ☒ Accrual ☐ Other _____ If the organization changed its method of accounting from a prior year or checked "Other," explain on Schedule O.			
2a	Were the organization's financial statements compiled or reviewed by an independent accountant?	2a		X
	If "Yes," check a box below to indicate whether the financial statements for the year were compiled or reviewed on a separate basis, consolidated basis, or both: ☐ Separate basis ☐ Consolidated basis ☐ Both consolidated and separate basis			
b	Were the organization's financial statements audited by an independent accountant?	2b	X	
	If "Yes," check a box below to indicate whether the financial statements for the year were audited on a separate basis, consolidated basis, or both: ☒ Separate basis ☐ Consolidated basis ☐ Both consolidated and separate basis			
c	If "Yes" to line 2a or 2b, does the organization have a committee that assumes responsibility for oversight of the audit, review, or compilation of its financial statements and selection of an independent accountant?	2c	X	
	If the organization changed either its oversight process or selection process during the tax year, explain on Schedule O.			
3a	As a result of a federal award, was the organization required to undergo an audit or audits as set forth in the Single Audit Act and OMB Circular A-133?	3a		X
b	If "Yes," did the organization undergo the required audit or audits? If the organization did not undergo the required audit or audits, explain why on Schedule O and describe any steps taken to undergo such audits	3b		

SCHEDULE A (Form 990)

Department of the Treasury
Internal Revenue Service

Public Charity Status and Public Support

Complete if the organization is a section 501(c)(3) organization or a section 4947(a)(1) nonexempt charitable trust.

▶ **Attach to Form 990 or Form 990-EZ.**

▶ **Go to www.irs.gov/Form990 for instructions and the latest information.**

OMB No. 1545-0047

2021

Open to Public Inspection

Name of the organization

OPPORTUNITY 180

Employer identification number

61-1753910

Part I Reason for Public Charity Status. (All organizations must complete this part.) See instructions.

The organization is not a private foundation because it is: (For lines 1 through 12, check only one box.)

1 ☐ A church, convention of churches, or association of churches described in **section 170(b)(1)(A)(i).**

2 ☐ A school described in **section 170(b)(1)(A)(ii).** (Attach Schedule E (Form 990).)

3 ☐ A hospital or a cooperative hospital service organization described in **section 170(b)(1)(A)(iii).**

4 ☐ A medical research organization operated in conjunction with a hospital described in **section 170(b)(1)(A)(iii).** Enter the hospital's name, city, and state: _____

5 ☐ An organization operated for the benefit of a college or university owned or operated by a governmental unit described in **section 170(b)(1)(A)(iv).** (Complete Part II.)

6 ☐ A federal, state, or local government or governmental unit described in **section 170(b)(1)(A)(v).**

7 ☒ An organization that normally receives a substantial part of its support from a governmental unit or from the general public described in **section 170(b)(1)(A)(vi).** (Complete Part II.)

8 ☐ A community trust described in **section 170(b)(1)(A)(vi).** (Complete Part II.)

9 ☐ An agricultural research organization described in **section 170(b)(1)(A)(ix)** operated in conjunction with a land-grant college or university or a non-land-grant college of agriculture (see instructions). Enter the name, city, and state of the college or university: _____

10 ☐ An organization that normally receives (1) more than 33 1/3% of its support from contributions, membership fees, and gross receipts from activities related to its exempt functions, subject to certain exceptions; and (2) no more than 33 1/3% of its support from gross investment income and unrelated business taxable income (less section 511 tax) from businesses acquired by the organization after June 30, 1975. See **section 509(a)(2).** (Complete Part III.)

11 ☐ An organization organized and operated exclusively to test for public safety. See **section 509(a)(4).**

12 ☐ An organization organized and operated exclusively for the benefit of, to perform the functions of, or to carry out the purposes of one or more publicly supported organizations described in **section 509(a)(1)** or **section 509(a)(2).** See **section 509(a)(3).** Check the box on lines 12a through 12d that describes the type of supporting organization and complete lines 12e, 12f, and 12g.

a ☐ **Type I.** A supporting organization operated, supervised, or controlled by its supported organization(s), typically by giving the supported organization(s) the power to regularly appoint or elect a majority of the directors or trustees of the supporting organization. **You must complete Part IV, Sections A and B.**

b ☐ **Type II.** A supporting organization supervised or controlled in connection with its supported organization(s), by having control or management of the supporting organization vested in the same persons that control or manage the supported organization(s). **You must complete Part IV, Sections A and C.**

c ☐ **Type III functionally integrated.** A supporting organization operated in connection with, and functionally integrated with, its supported organization(s) (see instructions). **You must complete Part IV, Sections A, D, and E.**

d ☐ **Type III non-functionally integrated.** A supporting organization operated in connection with its supported organization(s) that is not functionally integrated. The organization generally must satisfy a distribution requirement and an attentiveness requirement (see instructions). **You must complete Part IV, Sections A and D, and Part V.**

e ☐ Check this box if the organization received a written determination from the IRS that it is a Type I, Type II, Type III functionally integrated, or Type III non-functionally integrated supporting organization.

f Enter the number of supported organizations .....

g Provide the following information about the supported organization(s).

(i) Name of supported organization	(ii) EIN	(iii) Type of organization (described on lines 1-10 above (see instructions))	(iv) Is the organization listed in your governing document? Yes	(iv) No	(v) Amount of monetary support (see instructions)	(vi) Amount of other support (see instructions)
Total						

Part II **Support Schedule for Organizations Described in Sections 170(b)(1)(A)(iv) and 170(b)(1)(A)(vi)**

(Complete only if you checked the box on line 5, 7, or 8 of Part I or if the organization failed to qualify under Part III. If the organization fails to qualify under the tests listed below, please complete Part III.)

Section A. Public Support

Calendar year (or fiscal year beginning in) ▶	(a) 2017	(b) 2018	(c) 2019	(d) 2020	(e) 2021	(f) Total
1 Gifts, grants, contributions, and membership fees received. (Do not include any "unusual grants.")	236,650.	9694516.	68,269.	20605232.	13662536.	44267203.
2 Tax revenues levied for the organization's benefit and either paid to or expended on its behalf						
3 The value of services or facilities furnished by a governmental unit to the organization without charge						
4 **Total.** Add lines 1 through 3	236,650.	9694516.	68,269.	20605232.	13662536.	44267203.
5 The portion of total contributions by each person (other than a governmental unit or publicly supported organization) included on line 1 that exceeds 2% of the amount shown on line 11, column (f)						12314345.
6 **Public support.** Subtract line 5 from line 4.						31952858.

Section B. Total Support

Calendar year (or fiscal year beginning in) ▶	(a) 2017	(b) 2018	(c) 2019	(d) 2020	(e) 2021	(f) Total
7 Amounts from line 4	236,650.	9694516.	68,269.	20605232.	13662536.	44267203.
8 Gross income from interest, dividends, payments received on securities loans, rents, royalties, and income from similar sources			4,202.	78,365.	279,581.	362,148.
9 Net income from unrelated business activities, whether or not the business is regularly carried on						
10 Other income. Do not include gain or loss from the sale of capital assets (Explain in Part VI.)						
11 **Total support.** Add lines 7 through 10						44629351.

12 Gross receipts from related activities, etc. (see instructions) ▶ 12

13 **First 5 years.** If the Form 990 is for the organization's first, second, third, fourth, or fifth tax year as a section 501(c)(3) organization, check this box and **stop here** ▶ ☐

Section C. Computation of Public Support Percentage

14 Public support percentage for 2021 (line 6, column (f), divided by line 11, column (f))	14	71.60 %
15 Public support percentage from 2020 Schedule A, Part II, line 14	15	83.56 %

16a **33 1/3% support test - 2021.** If the organization did not check the box on line 13, and line 14 is 33 1/3% or more, check this box and **stop here.** The organization qualifies as a publicly supported organization ▶ ☒

b **33 1/3% support test - 2020.** If the organization did not check a box on line 13 or 16a, and line 15 is 33 1/3% or more, check this box and **stop here.** The organization qualifies as a publicly supported organization ▶ ☐

17a **10% -facts-and-circumstances test - 2021.** If the organization did not check a box on line 13, 16a, or 16b, and line 14 is 10% or more, and if the organization meets the facts-and-circumstances test, check this box and **stop here.** Explain in Part VI how the organization meets the facts-and-circumstances test. The organization qualifies as a publicly supported organization ▶ ☐

b **10% -facts-and-circumstances test - 2020.** If the organization did not check a box on line 13, 16a, 16b, or 17a, and line 15 is 10% or more, and if the organization meets the facts-and-circumstances test, check this box and **stop here.** Explain in Part VI how the organization meets the facts-and-circumstances test. The organization qualifies as a publicly supported organization ▶ ☐

18 **Private foundation.** If the organization did not check a box on line 13, 16a, 16b, 17a, or 17b, check this box and see instructions ▶ ☐

Part III Support Schedule for Organizations Described in Section 509(a)(2)

(Complete only if you checked the box on line 10 of Part I or if the organization failed to qualify under Part II. If the organization fails to qualify under the tests listed below, please complete Part II.)

Section A. Public Support

Calendar year (or fiscal year beginning in) ▶	(a) 2017	(b) 2018	(c) 2019	(d) 2020	(e) 2021	(f) Total
1 Gifts, grants, contributions, and membership fees received. (Do not include any "unusual grants.")						
2 Gross receipts from admissions, merchandise sold or services performed, or facilities furnished in any activity that is related to the organization's tax-exempt purpose						
3 Gross receipts from activities that are not an unrelated trade or business under section 513						
4 Tax revenues levied for the organization's benefit and either paid to or expended on its behalf						
5 The value of services or facilities furnished by a governmental unit to the organization without charge						
6 **Total.** Add lines 1 through 5						
7a Amounts included on lines 1, 2, and 3 received from disqualified persons						
b Amounts included on lines 2 and 3 received from other than disqualified persons that exceed the greater of $5,000 or 1% of the amount on line 13 for the year						
c Add lines 7a and 7b						
8 **Public support.** (Subtract line 7c from line 6.)						

Section B. Total Support

Calendar year (or fiscal year beginning in) ▶	(a) 2017	(b) 2018	(c) 2019	(d) 2020	(e) 2021	(f) Total
9 Amounts from line 6						
10a Gross income from interest, dividends, payments received on securities loans, rents, royalties, and income from similar sources						
b Unrelated business taxable income (less section 511 taxes) from businesses acquired after June 30, 1975						
c Add lines 10a and 10b						
11 Net income from unrelated business activities not included on line 10b, whether or not the business is regularly carried on						
12 Other income. Do not include gain or loss from the sale of capital assets (Explain in Part VI.)						
13 **Total support.** (Add lines 9, 10c, 11, and 12.)						

14 **First 5 years.** If the Form 990 is for the organization's first, second, third, fourth, or fifth tax year as a section 501(c)(3) organization, check this box and **stop here** ▶ ☐

Section C. Computation of Public Support Percentage

15 Public support percentage for 2021 (line 8, column (f), divided by line 13, column (f))	15	%
16 Public support percentage from 2020 Schedule A, Part III, line 15	16	%

Section D. Computation of Investment Income Percentage

17 Investment income percentage for **2021** (line 10c, column (f), divided by line 13, column (f))	17	%
18 Investment income percentage from **2020** Schedule A, Part III, line 17	18	%

19a **33 1/3% support tests - 2021.** If the organization did not check the box on line 14, and line 15 is more than 33 1/3%, and line 17 is not more than 33 1/3%, check this box and **stop here.** The organization qualifies as a publicly supported organization ▶ ☐

b **33 1/3% support tests - 2020.** If the organization did not check a box on line 14 or line 19a, and line 16 is more than 33 1/3%, and line 18 is not more than 33 1/3%, check this box and **stop here.** The organization qualifies as a publicly supported organization ▶ ☐

20 **Private foundation.** If the organization did not check a box on line 14, 19a, or 19b, check this box and see instructions ▶ ☐

Part IV Supporting Organizations

(Complete only if you checked a box in line 12 on Part I. If you checked box 12a, Part I, complete Sections A and B. If you checked box 12b, Part I, complete Sections A and C. If you checked box 12c, Part I, complete Sections A, D, and E. If you checked box 12d, Part I, complete Sections A and D, and complete Part V.)

Section A. All Supporting Organizations

		Yes	No
1	Are all of the organization's supported organizations listed by name in the organization's governing documents? *If "No," describe in* **Part VI** *how the supported organizations are designated. If designated by class or purpose, describe the designation. If historic and continuing relationship, explain.*	1	
2	Did the organization have any supported organization that does not have an IRS determination of status under section 509(a)(1) or (2)? *If "Yes," explain in* **Part VI** *how the organization determined that the supported organization was described in section 509(a)(1) or (2).*	2	
3a	Did the organization have a supported organization described in section 501(c)(4), (5), or (6)? *If "Yes," answer lines 3b and 3c below.*	3a	
b	Did the organization confirm that each supported organization qualified under section 501(c)(4), (5), or (6) and satisfied the public support tests under section 509(a)(2)? *If "Yes," describe in* **Part VI** *when and how the organization made the determination.*	3b	
c	Did the organization ensure that all support to such organizations was used exclusively for section 170(c)(2)(B) purposes? *If "Yes," explain in* **Part VI** *what controls the organization put in place to ensure such use.*	3c	
4a	Was any supported organization not organized in the United States ("foreign supported organization")? *If "Yes," and if you checked box 12a or 12b in Part I, answer lines 4b and 4c below.*	4a	
b	Did the organization have ultimate control and discretion in deciding whether to make grants to the foreign supported organization? *If "Yes," describe in* **Part VI** *how the organization had such control and discretion despite being controlled or supervised by or in connection with its supported organizations.*	4b	
c	Did the organization support any foreign supported organization that does not have an IRS determination under sections 501(c)(3) and 509(a)(1) or (2)? *If "Yes," explain in* **Part VI** *what controls the organization used to ensure that all support to the foreign supported organization was used exclusively for section 170(c)(2)(B) purposes.*	4c	
5a	Did the organization add, substitute, or remove any supported organizations during the tax year? *If "Yes," answer lines 5b and 5c below (if applicable). Also, provide detail in* **Part VI,** *including (i) the names and EIN numbers of the supported organizations added, substituted, or removed; (ii) the reasons for each such action; (iii) the authority under the organization's organizing document authorizing such action; and (iv) how the action was accomplished (such as by amendment to the organizing document).*	5a	
b	**Type I or Type II only.** Was any added or substituted supported organization part of a class already designated in the organization's organizing document?	5b	
c	**Substitutions only.** Was the substitution the result of an event beyond the organization's control?	5c	
6	Did the organization provide support (whether in the form of grants or the provision of services or facilities) to anyone other than (i) its supported organizations, (ii) individuals that are part of the charitable class benefited by one or more of its supported organizations, or (iii) other supporting organizations that also support or benefit one or more of the filing organization's supported organizations? *If "Yes," provide detail in* **Part VI.**	6	
7	Did the organization provide a grant, loan, compensation, or other similar payment to a substantial contributor (as defined in section 4958(c)(3)(C)), a family member of a substantial contributor, or a 35% controlled entity with regard to a substantial contributor? *If "Yes," complete Part I of Schedule L (Form 990).*	7	
8	Did the organization make a loan to a disqualified person (as defined in section 4958) not described on line 7? *If "Yes," complete Part I of Schedule L (Form 990).*	8	
9a	Was the organization controlled directly or indirectly at any time during the tax year by one or more disqualified persons, as defined in section 4946 (other than foundation managers and organizations described in section 509(a)(1) or (2))? *If "Yes," provide detail in* **Part VI.**	9a	
b	Did one or more disqualified persons (as defined on line 9a) hold a controlling interest in any entity in which the supporting organization had an interest? *If "Yes," provide detail in* **Part VI.**	9b	
c	Did a disqualified person (as defined on line 9a) have an ownership interest in, or derive any personal benefit from, assets in which the supporting organization also had an interest? *If "Yes," provide detail in* **Part VI.**	9c	
10a	Was the organization subject to the excess business holdings rules of section 4943 because of section 4943(f) (regarding certain Type II supporting organizations, and all Type III non-functionally integrated supporting organizations)? *If "Yes," answer line 10b below.*	10a	
b	Did the organization have any excess business holdings in the tax year? *(Use Schedule C, Form 4720, to determine whether the organization had excess business holdings.)*	10b	

Part IV Supporting Organizations *(continued)*

		Yes	No
11	Has the organization accepted a gift or contribution from any of the following persons?		
a	A person who directly or indirectly controls, either alone or together with persons described on lines 11b and 11c below, the governing body of a supported organization?	11a	
b	A family member of a person described on line 11a above?	11b	
c	A 35% controlled entity of a person described on line 11a or 11b above? *If "Yes" to line 11a, 11b, or 11c, provide detail in* **Part VI.**	11c	

Section B. Type I Supporting Organizations

		Yes	No
1	Did the governing body, members of the governing body, officers acting in their official capacity, or membership of one or more supported organizations have the power to regularly appoint or elect at least a majority of the organization's officers, directors, or trustees at all times during the tax year? *If "No," describe in* **Part VI** *how the supported organization(s) effectively operated, supervised, or controlled the organization's activities. If the organization had more than one supported organization, describe how the powers to appoint and/or remove officers, directors, or trustees were allocated among the supported organizations and what conditions or restrictions, if any, applied to such powers during the tax year.*	1	
2	Did the organization operate for the benefit of any supported organization other than the supported organization(s) that operated, supervised, or controlled the supporting organization? *If "Yes," explain in* **Part VI** *how providing such benefit carried out the purposes of the supported organization(s) that operated, supervised, or controlled the supporting organization.*	2	

Section C. Type II Supporting Organizations

		Yes	No
1	Were a majority of the organization's directors or trustees during the tax year also a majority of the directors or trustees of each of the organization's supported organization(s)? *If "No," describe in* **Part VI** *how control or management of the supporting organization was vested in the same persons that controlled or managed the supported organization(s).*	1	

Section D. All Type III Supporting Organizations

		Yes	No
1	Did the organization provide to each of its supported organizations, by the last day of the fifth month of the organization's tax year, (i) a written notice describing the type and amount of support provided during the prior tax year, (ii) a copy of the Form 990 that was most recently filed as of the date of notification, and (iii) copies of the organization's governing documents in effect on the date of notification, to the extent not previously provided?	1	
2	Were any of the organization's officers, directors, or trustees either (i) appointed or elected by the supported organization(s) or (ii) serving on the governing body of a supported organization? *If "No," explain in* **Part VI** *how the organization maintained a close and continuous working relationship with the supported organization(s).*	2	
3	By reason of the relationship described on line 2, above, did the organization's supported organizations have a significant voice in the organization's investment policies and in directing the use of the organization's income or assets at all times during the tax year? *If "Yes," describe in* **Part VI** *the role the organization's supported organizations played in this regard.*	3	

Section E. Type III Functionally Integrated Supporting Organizations

1 *Check the box next to the method that the organization used to satisfy the Integral Part Test during the year* **(see instructions).**

a ☐ The organization satisfied the Activities Test. *Complete* **line 2** *below.*

b ☐ The organization is the parent of each of its supported organizations. *Complete* **line 3** *below.*

c ☐ The organization supported a governmental entity. *Describe in* **Part VI** *how you supported a governmental entity (see instructions).*

		Yes	No
2	Activities Test. **Answer lines 2a and 2b below.**		
a	Did substantially all of the organization's activities during the tax year directly further the exempt purposes of the supported organization(s) to which the organization was responsive? *If "Yes," then in* **Part VI identify those supported organizations and explain** *how these activities directly furthered their exempt purposes, how the organization was responsive to those supported organizations, and how the organization determined that these activities constituted substantially all of its activities.*	2a	
b	Did the activities described on line 2a, above, constitute activities that, but for the organization's involvement, one or more of the organization's supported organization(s) would have been engaged in? *If "Yes," explain in* **Part VI** *the reasons for the organization's position that its supported organization(s) would have engaged in these activities but for the organization's involvement.*	2b	
3	Parent of Supported Organizations. **Answer lines 3a and 3b below.**		
a	Did the organization have the power to regularly appoint or elect a majority of the officers, directors, or trustees of each of the supported organizations? *If "Yes" or "No" provide details in* **Part VI.**	3a	
b	Did the organization exercise a substantial degree of direction over the policies, programs, and activities of each of its supported organizations? *If "Yes," describe in* **Part VI** *the role played by the organization in this regard.*	3b	

Part V Type III Non-Functionally Integrated 509(a)(3) Supporting Organizations

1 ☐ Check here if the organization satisfied the Integral Part Test as a qualifying trust on Nov. 20, 1970 (*explain in* **Part VI**). **See instructions.** All other Type III non-functionally integrated supporting organizations must complete Sections A through E.

Section A - Adjusted Net Income		(A) Prior Year	(B) Current Year (optional)
1 Net short-term capital gain	1		
2 Recoveries of prior-year distributions	2		
3 Other gross income (see instructions)	3		
4 Add lines 1 through 3.	4		
5 Depreciation and depletion	5		
6 Portion of operating expenses paid or incurred for production or collection of gross income or for management, conservation, or maintenance of property held for production of income (see instructions)	6		
7 Other expenses (see instructions)	7		
8 **Adjusted Net Income** (subtract lines 5, 6, and 7 from line 4)	8		

Section B - Minimum Asset Amount		(A) Prior Year	(B) Current Year (optional)
1 Aggregate fair market value of all non-exempt-use assets (see instructions for short tax year or assets held for part of year):			
a Average monthly value of securities	1a		
b Average monthly cash balances	1b		
c Fair market value of other non-exempt-use assets	1c		
d **Total** (add lines 1a, 1b, and 1c)	1d		
e **Discount** claimed for blockage or other factors (*explain in detail in* **Part VI**):			
2 Acquisition indebtedness applicable to non-exempt-use assets	2		
3 Subtract line 2 from line 1d.	3		
4 Cash deemed held for exempt use. Enter 0.015 of line 3 (for greater amount, see instructions).	4		
5 Net value of non-exempt-use assets (subtract line 4 from line 3)	5		
6 Multiply line 5 by 0.035.	6		
7 Recoveries of prior-year distributions	7		
8 **Minimum Asset Amount** (add line 7 to line 6)	8		

Section C - Distributable Amount		Current Year
1 Adjusted net income for prior year (from Section A, line 8, column A)	1	
2 Enter 0.85 of line 1.	2	
3 Minimum asset amount for prior year (from Section B, line 8, column A)	3	
4 Enter greater of line 2 or line 3.	4	
5 Income tax imposed in prior year	5	
6 **Distributable Amount.** Subtract line 5 from line 4, unless subject to emergency temporary reduction (see instructions).	6	

7 ☐ Check here if the current year is the organization's first as a non-functionally integrated Type III supporting organization (see instructions).

Schedule A (Form 990) 2021

Part V **Type III Non-Functionally Integrated 509(a)(3) Supporting Organizations** *(continued)*

Section D - Distributions		Current Year
1 Amounts paid to supported organizations to accomplish exempt purposes	1	
2 Amounts paid to perform activity that directly furthers exempt purposes of supported organizations, in excess of income from activity	2	
3 Administrative expenses paid to accomplish exempt purposes of supported organizations	3	
4 Amounts paid to acquire exempt-use assets	4	
5 Qualified set-aside amounts (prior IRS approval required - *provide details in* **Part VI**)	5	
6 Other distributions (*describe in* **Part VI**). See instructions.	6	
7 **Total annual distributions.** Add lines 1 through 6.	7	
8 Distributions to attentive supported organizations to which the organization is responsive (*provide details in* **Part VI**). See instructions.	8	
9 Distributable amount for 2021 from Section C, line 6	9	
10 Line 8 amount divided by line 9 amount	10	

Section E - Distribution Allocations (see instructions)	(i) Excess Distributions	(ii) Underdistributions Pre-2021	(iii) Distributable Amount for 2021
1 Distributable amount for 2021 from Section C, line 6			
2 Underdistributions, if any, for years prior to 2021 (reasonable cause required - *explain in* **Part VI**). See instructions.			
3 Excess distributions carryover, if any, to 2021			
a From 2016			
b From 2017			
c From 2018			
d From 2019			
e From 2020			
f **Total** of lines 3a through 3e			
g Applied to underdistributions of prior years			
h Applied to 2021 distributable amount			
i Carryover from 2016 not applied (see instructions)			
j Remainder. Subtract lines 3g, 3h, and 3i from line 3f.			
4 Distributions for 2021 from Section D, line 7: $			
a Applied to underdistributions of prior years			
b Applied to 2021 distributable amount			
c Remainder. Subtract lines 4a and 4b from line 4.			
5 Remaining underdistributions for years prior to 2021, if any. Subtract lines 3g and 4a from line 2. For result greater than zero, *explain in* **Part VI**. See instructions.			
6 Remaining underdistributions for 2021. Subtract lines 3h and 4b from line 1. For result greater than zero, *explain in* **Part VI**. See instructions.			
7 **Excess distributions carryover to 2022.** Add lines 3j and 4c.			
8 Breakdown of line 7:			
a Excess from 2017			
b Excess from 2018			
c Excess from 2019			
d Excess from 2020			
e Excess from 2021			

Part VI **Supplemental Information.** Provide the explanations required by Part II, line 10; Part II, line 17a or 17b; Part III, line 12; Part IV, Section A, lines 1, 2, 3b, 3c, 4b, 4c, 5a, 6, 9a, 9b, 9c, 11a, 11b, and 11c; Part IV, Section B, lines 1 and 2; Part IV, Section C, line 1; Part IV, Section D, lines 2 and 3; Part IV, Section E, lines 1c, 2a, 2b, 3a, and 3b; Part V, line 1; Part V, Section B, line 1e; Part V, Section D, lines 5, 6, and 8; and Part V, Section E, lines 2, 5, and 6. Also complete this part for any additional information. (See instructions.)

Schedule B (Form 990)

Department of the Treasury
Internal Revenue Service

Schedule of Contributors

▶ Attach to Form 990 or Form 990-PF.
▶ Go to www.irs.gov/Form990 for the latest information.

OMB No. 1545-0047

2021

Name of the organization

OPPORTUNITY 180

Employer identification number

61-1753910

Organization type (check one):

Filers of:	Section:
Form 990 or 990-EZ	[X] 501(c)(3) (enter number) organization
	[ ] 4947(a)(1) nonexempt charitable trust **not** treated as a private foundation
	[ ] 527 political organization
Form 990-PF	[ ] 501(c)(3) exempt private foundation
	[ ] 4947(a)(1) nonexempt charitable trust treated as a private foundation
	[ ] 501(c)(3) taxable private foundation

Check if your organization is covered by the **General Rule** or a **Special Rule.**
Note: Only a section 501(c)(7), (8), or (10) organization can check boxes for both the General Rule and a Special Rule. See instructions.

General Rule

[ ] For an organization filing Form 990, 990-EZ, or 990-PF that received, during the year, contributions totaling $5,000 or more (in money or property) from any one contributor. Complete Parts I and II. See instructions for determining a contributor's total contributions.

Special Rules

[X] For an organization described in section 501(c)(3) filing Form 990 or 990-EZ that met the 33 1/3% support test of the regulations under sections 509(a)(1) and 170(b)(1)(A)(vi), that checked Schedule A (Form 990), Part II, line 13, 16a, or 16b, and that received from any one contributor, during the year, total contributions of the greater of **(1)** $5,000; or **(2)** 2% of the amount on (i) Form 990, Part VIII, line 1h; or (ii) Form 990-EZ, line 1. Complete Parts I and II.

[ ] For an organization described in section 501(c)(7), (8), or (10) filing Form 990 or 990-EZ that received from any one contributor, during the year, total contributions of more than $1,000 exclusively for religious, charitable, scientific, literary, or educational purposes, or for the prevention of cruelty to children or animals. Complete Parts I (entering "N/A" in column (b) instead of the contributor name and address), II, and III.

[ ] For an organization described in section 501(c)(7), (8), or (10) filing Form 990 or 990-EZ that received from any one contributor, during the year, contributions *exclusively* for religious, charitable, etc., purposes, but no such contributions totaled more than $1,000. If this box is checked, enter here the total contributions that were received during the year for an *exclusively* religious, charitable, etc., purpose. Don't complete any of the parts unless the **General Rule** applies to this organization because it received *nonexclusively* religious, charitable, etc., contributions totaling $5,000 or more during the year ..... ▶ $ _____

Caution: An organization that isn't covered by the General Rule and/or the Special Rules doesn't file Schedule B (Form 990), but it **must** answer "No" on Part IV, line 2, of its Form 990; or check the box on line H of its Form 990-EZ or on its Form 990-PF, Part I, line 2, to certify that it doesn't meet the filing requirements of Schedule B (Form 990).

Name of organization: OPPORTUNITY 180

Employer identification number: 61-1753910

Part I Contributors (see instructions). Use duplicate copies of Part I if additional space is needed.

(a) No.	(b) Name, address, and ZIP + 4	(c) Total contributions	(d) Type of contribution
1		$ 5,092,106.	Person [X] Payroll [ ] Noncash [ ] (Complete Part II for noncash contributions.)
2		$ 4,300,000.	Person [X] Payroll [ ] Noncash [ ] (Complete Part II for noncash contributions.)
3		$ 3,009,682.	Person [X] Payroll [ ] Noncash [ ] (Complete Part II for noncash contributions.)
4		$ 1,231,400.	Person [X] Payroll [ ] Noncash [ ] (Complete Part II for noncash contributions.)
		$	Person [ ] Payroll [ ] Noncash [ ] (Complete Part II for noncash contributions.)
		$	Person [ ] Payroll [ ] Noncash [ ] (Complete Part II for noncash contributions.)

Name of organization: OPPORTUNITY 180

Employer identification number: 61-1753910

Part II Noncash Property (see instructions). Use duplicate copies of Part II if additional space is needed.

(a) No. from Part I	(b) Description of noncash property given	(c) FMV (or estimate) (See instructions.)	(d) Date received
		$	
(a) No. from Part I	(b) Description of noncash property given	(c) FMV (or estimate) (See instructions.)	(d) Date received
		$	
(a) No. from Part I	(b) Description of noncash property given	(c) FMV (or estimate) (See instructions.)	(d) Date received
		$	
(a) No. from Part I	(b) Description of noncash property given	(c) FMV (or estimate) (See instructions.)	(d) Date received
		$	
(a) No. from Part I	(b) Description of noncash property given	(c) FMV (or estimate) (See instructions.)	(d) Date received
		$	
(a) No. from Part I	(b) Description of noncash property given	(c) FMV (or estimate) (See instructions.)	(d) Date received
		$	

Name of organization

OPPORTUNITY 180

Employer identification number

61-1753910

Part III **Exclusively religious, charitable, etc., contributions to organizations described in section 501(c)(7), (8), or (10) that total more than $1,000 for the year from any one contributor.** Complete columns (a) through (e) and the following line entry. For organizations completing Part III, enter the total of exclusively religious, charitable, etc., contributions of **$1,000 or less** for the year. (Enter this info. once.) ▶ $

Use duplicate copies of Part III if additional space is needed.

(a) No. from Part I	(b) Purpose of gift	(c) Use of gift	(d) Description of how gift is held

(e) Transfer of gift

Transferee's name, address, and ZIP + 4	Relationship of transferor to transferee

(a) No. from Part I	(b) Purpose of gift	(c) Use of gift	(d) Description of how gift is held

(e) Transfer of gift

Transferee's name, address, and ZIP + 4	Relationship of transferor to transferee

(a) No. from Part I	(b) Purpose of gift	(c) Use of gift	(d) Description of how gift is held

(e) Transfer of gift

Transferee's name, address, and ZIP + 4	Relationship of transferor to transferee

(a) No. from Part I	(b) Purpose of gift	(c) Use of gift	(d) Description of how gift is held

(e) Transfer of gift

Transferee's name, address, and ZIP + 4	Relationship of transferor to transferee

SCHEDULE C (Form 990)

Department of the Treasury
Internal Revenue Service

Political Campaign and Lobbying Activities

For Organizations Exempt From Income Tax Under section 501(c) and section 527

▶ Complete if the organization is described below. ▶ Attach to Form 990 or Form 990-EZ.

▶ Go to www.irs.gov/Form990 for instructions and the latest information.

OMB No. 1545-0047

2021

Open to Public Inspection

If the organization answered "Yes," on Form 990, Part IV, line 3, or Form 990-EZ, Part V, line 46 (Political Campaign Activities), then

- Section 501(c)(3) organizations: Complete Parts I-A and B. Do not complete Part I-C.
- Section 501(c) (other than section 501(c)(3)) organizations: Complete Parts I-A and C below. Do not complete Part I-B.
- Section 527 organizations: Complete Part I-A only.

If the organization answered "Yes," on Form 990, Part IV, line 4, or Form 990-EZ, Part VI, line 47 (Lobbying Activities), then

- Section 501(c)(3) organizations that have filed Form 5768 (election under section 501(h)): Complete Part II-A. Do not complete Part II-B.
- Section 501(c)(3) organizations that have NOT filed Form 5768 (election under section 501(h)): Complete Part II-B. Do not complete Part II-A.

If the organization answered "Yes," on Form 990, Part IV, line 5 (Proxy Tax) (See separate instructions) or Form 990-EZ, Part V, line 35c (Proxy Tax) (See separate instructions), then

- Section 501(c)(4), (5), or (6) organizations: Complete Part III.

Name of organization	Employer identification number
OPPORTUNITY 180	61-1753910

Part I-A Complete if the organization is exempt under section 501(c) or is a section 527 organization.

1 Provide a description of the organization's direct and indirect political campaign activities in Part IV.

2 Political campaign activity expenditures ▶ $

3 Volunteer hours for political campaign activities

Part I-B Complete if the organization is exempt under section 501(c)(3).

1 Enter the amount of any excise tax incurred by the organization under section 4955 ▶ $

2 Enter the amount of any excise tax incurred by organization managers under section 4955 ▶ $

3 If the organization incurred a section 4955 tax, did it file Form 4720 for this year? ☐ Yes ☐ No

4a Was a correction made? ☐ Yes ☐ No

b If "Yes," describe in Part IV.

Part I-C Complete if the organization is exempt under section 501(c), except section 501(c)(3).

1 Enter the amount directly expended by the filing organization for section 527 exempt function activities ▶ $

2 Enter the amount of the filing organization's funds contributed to other organizations for section 527 exempt function activities ▶ $

3 Total exempt function expenditures. Add lines 1 and 2. Enter here and on Form 1120-POL, line 17b ▶ $

4 Did the filing organization file **Form 1120-POL** for this year? ☐ Yes ☐ No

5 Enter the names, addresses and employer identification number (EIN) of all section 527 political organizations to which the filing organization made payments. For each organization listed, enter the amount paid from the filing organization's funds. Also enter the amount of political contributions received that were promptly and directly delivered to a separate political organization, such as a separate segregated fund or a political action committee (PAC). If additional space is needed, provide information in Part IV.

(a) Name	(b) Address	(c) EIN	(d) Amount paid from filing organization's funds. If none, enter -0-.	(e) Amount of political contributions received and promptly and directly delivered to a separate political organization. If none, enter -0-.

Part II-A **Complete if the organization is exempt under section 501(c)(3) and filed Form 5768 (election under section 501(h)).**

A Check ▶ ☐ if the filing organization belongs to an affiliated group (and list in Part IV each affiliated group member's name, address, EIN, expenses, and share of excess lobbying expenditures).

B Check ▶ ☐ if the filing organization checked box A and "limited control" provisions apply.

Limits on Lobbying Expenditures (The term "expenditures" means amounts paid or incurred.)	(a) Filing organization's totals	(b) Affiliated group totals
1a Total lobbying expenditures to influence public opinion (grassroots lobbying)	22,500.	
b Total lobbying expenditures to influence a legislative body (direct lobbying)		
c Total lobbying expenditures (add lines 1a and 1b)	22,500.	
d Other exempt purpose expenditures	7,320,338.	
e Total exempt purpose expenditures (add lines 1c and 1d)	7,342,838.	
f Lobbying nontaxable amount. Enter the amount from the following table in both columns.	517,142.	
g Grassroots nontaxable amount (enter 25% of line 1f)	129,286.	
h Subtract line 1g from line 1a. If zero or less, enter -0-	0.	
i Subtract line 1f from line 1c. If zero or less, enter -0-	0.	

If the amount on line 1e, column (a) or (b) is:	The lobbying nontaxable amount is:
Not over $500,000	20% of the amount on line 1e.
Over $500,000 but not over $1,000,000	$100,000 plus 15% of the excess over $500,000.
Over $1,000,000 but not over $1,500,000	$175,000 plus 10% of the excess over $1,000,000.
Over $1,500,000 but not over $17,000,000	$225,000 plus 5% of the excess over $1,500,000.
Over $17,000,000	$1,000,000.

j If there is an amount other than zero on either line 1h or line 1i, did the organization file Form 4720 reporting section 4911 tax for this year? ☐ Yes ☐ No

4-Year Averaging Period Under Section 501(h)

(Some organizations that made a section 501(h) election do not have to complete all of the five columns below. See the separate instructions for lines 2a through 2f.)

Lobbying Expenditures During 4-Year Averaging Period

Calendar year (or fiscal year beginning in)	(a) 2018	(b) 2019	(c) 2020	(d) 2021	(e) Total
2a Lobbying nontaxable amount				517,142.	517,142.
b Lobbying ceiling amount (150% of line 2a, column(e))					775,713.
c Total lobbying expenditures				22,500.	22,500.
d Grassroots nontaxable amount				129,286.	129,286.
e Grassroots ceiling amount (150% of line 2d, column (e))					193,929.
f Grassroots lobbying expenditures				22,500.	22,500.

Part II-B **Complete if the organization is exempt under section 501(c)(3) and has NOT filed Form 5768 (election under section 501(h)).**

For each "Yes" response on lines 1a through 1i below, provide in Part IV a detailed description of the lobbying activity.	(a) Yes	(a) No	(b) Amount
1 During the year, did the filing organization attempt to influence foreign, national, state, or local legislation, including any attempt to influence public opinion on a legislative matter or referendum, through the use of:			
a Volunteers?			
b Paid staff or management (include compensation in expenses reported on lines 1c through 1i)?			
c Media advertisements?			
d Mailings to members, legislators, or the public?			
e Publications, or published or broadcast statements?			
f Grants to other organizations for lobbying purposes?			
g Direct contact with legislators, their staffs, government officials, or a legislative body?			
h Rallies, demonstrations, seminars, conventions, speeches, lectures, or any similar means?			
i Other activities?			
j Total. Add lines 1c through 1i			
2a Did the activities in line 1 cause the organization to be not described in section 501(c)(3)?			
b If "Yes," enter the amount of any tax incurred under section 4912			
c If "Yes," enter the amount of any tax incurred by organization managers under section 4912			
d If the filing organization incurred a section 4912 tax, did it file Form 4720 for this year?			

Part III-A **Complete if the organization is exempt under section 501(c)(4), section 501(c)(5), or section 501(c)(6).**

		Yes	No
1 Were substantially all (90% or more) dues received nondeductible by members?	1		
2 Did the organization make only in-house lobbying expenditures of $2,000 or less?	2		
3 Did the organization agree to carry over lobbying and political campaign activity expenditures from the prior year?	3		

Part III-B **Complete if the organization is exempt under section 501(c)(4), section 501(c)(5), or section 501(c)(6) and if either (a) BOTH Part III-A, lines 1 and 2, are answered "No" OR (b) Part III-A, line 3, is answered "Yes."**

1 Dues, assessments and similar amounts from members	1	
2 Section 162(e) nondeductible lobbying and political expenditures **(do not include amounts of political expenses for which the section 527(f) tax was paid).**		
a Current year	2a	
b Carryover from last year	2b	
c Total	2c	
3 Aggregate amount reported in section 6033(e)(1)(A) notices of nondeductible section 162(e) dues	3	
4 If notices were sent and the amount on line 2c exceeds the amount on line 3, what portion of the excess does the organization agree to carryover to the reasonable estimate of nondeductible lobbying and political expenditure next year?	4	
5 Taxable amount of lobbying and political expenditures. See instructions	5	

Part IV **Supplemental Information**

Provide the descriptions required for Part I-A, line 1; Part I-B, line 4; Part I-C, line 5; Part II-A (affiliated group list); Part II-A, lines 1 and 2 (See instructions); and Part II-B, line 1. Also, complete this part for any additional information.

DESCRIPTION OF ACTVITIES

TO ADVOCATE FOR OUR FIVE CORE STRATEGIES: MORE GREAT SCHOOLS, ACCESSIBLE DATA, GREAT IDEAS (TALENT), GOOD GOVERNANCE AND ENGAGED COMMUNITY. TO ENSURE A POLICY LANDSCAPE THAT ENSURES THAT EVERY KID CAN HAVE ACCESS TO A GREAT SCHOOL IN THEIR NEIGHBORHOOD BY ENSURING CHOICE OPTIONS ARE MADE AVAILABLE.

SCHEDULE D (Form 990)

Department of the Treasury
Internal Revenue Service

Supplemental Financial Statements

▶ Complete if the organization answered "Yes" on Form 990, Part IV, line 6, 7, 8, 9, 10, 11a, 11b, 11c, 11d, 11e, 11f, 12a, or 12b.
▶ Attach to Form 990.
▶ Go to www.irs.gov/Form990 for instructions and the latest information.

OMB No. 1545-0047

2021

Open to Public Inspection

Name of the organization
OPPORTUNITY 180

Employer identification number
61-1753910

Part I Organizations Maintaining Donor Advised Funds or Other Similar Funds or Accounts. Complete if the organization answered "Yes" on Form 990, Part IV, line 6.

	(a) Donor advised funds	(b) Funds and other accounts
1 Total number at end of year		
2 Aggregate value of contributions to (during year)		
3 Aggregate value of grants from (during year)		
4 Aggregate value at end of year		

5 Did the organization inform all donors and donor advisors in writing that the assets held in donor advised funds are the organization's property, subject to the organization's exclusive legal control? ☐ Yes ☐ No

6 Did the organization inform all grantees, donors, and donor advisors in writing that grant funds can be used only for charitable purposes and not for the benefit of the donor or donor advisor, or for any other purpose conferring impermissible private benefit? ☐ Yes ☐ No

Part II Conservation Easements. Complete if the organization answered "Yes" on Form 990, Part IV, line 7.

1 Purpose(s) of conservation easements held by the organization (check all that apply).
- ☐ Preservation of land for public use (for example, recreation or education)
- ☐ Preservation of a historically important land area
- ☐ Protection of natural habitat
- ☐ Preservation of a certified historic structure
- ☐ Preservation of open space

2 Complete lines 2a through 2d if the organization held a qualified conservation contribution in the form of a conservation easement on the last day of the tax year.

	Held at the End of the Tax Year
a Total number of conservation easements 2a	
b Total acreage restricted by conservation easements 2b	
c Number of conservation easements on a certified historic structure included in (a) 2c	
d Number of conservation easements included in (c) acquired after 7/25/06, and not on a historic structure listed in the National Register 2d	

3 Number of conservation easements modified, transferred, released, extinguished, or terminated by the organization during the tax year ▶ _____

4 Number of states where property subject to conservation easement is located ▶ _____

5 Does the organization have a written policy regarding the periodic monitoring, inspection, handling of violations, and enforcement of the conservation easements it holds? ☐ Yes ☐ No

6 Staff and volunteer hours devoted to monitoring, inspecting, handling of violations, and enforcing conservation easements during the year ▶ _____

7 Amount of expenses incurred in monitoring, inspecting, handling of violations, and enforcing conservation easements during the year ▶ $ _____

8 Does each conservation easement reported on line 2(d) above satisfy the requirements of section 170(h)(4)(B)(i) and section 170(h)(4)(B)(ii)? ☐ Yes ☐ No

9 In Part XIII, describe how the organization reports conservation easements in its revenue and expense statement and balance sheet, and include, if applicable, the text of the footnote to the organization's financial statements that describes the organization's accounting for conservation easements.

Part III Organizations Maintaining Collections of Art, Historical Treasures, or Other Similar Assets.

Complete if the organization answered "Yes" on Form 990, Part IV, line 8.

1a If the organization elected, as permitted under FASB ASC 958, not to report in its revenue statement and balance sheet works of art, historical treasures, or other similar assets held for public exhibition, education, or research in furtherance of public service, provide in Part XIII the text of the footnote to its financial statements that describes these items.

b If the organization elected, as permitted under FASB ASC 958, to report in its revenue statement and balance sheet works of art, historical treasures, or other similar assets held for public exhibition, education, or research in furtherance of public service, provide the following amounts relating to these items:

(i) Revenue included on Form 990, Part VIII, line 1 ▶ $ _____

(ii) Assets included in Form 990, Part X ▶ $ _____

2 If the organization received or held works of art, historical treasures, or other similar assets for financial gain, provide the following amounts required to be reported under FASB ASC 958 relating to these items:

a Revenue included on Form 990, Part VIII, line 1 ▶ $ _____

b Assets included in Form 990, Part X ▶ $ _____

Part III Organizations Maintaining Collections of Art, Historical Treasures, or Other Similar Assets *(continued)*

3 Using the organization's acquisition, accession, and other records, check any of the following that make significant use of its collection items (check all that apply):

a ☐ Public exhibition
b ☐ Scholarly research
c ☐ Preservation for future generations
d ☐ Loan or exchange program
e ☐ Other _____

4 Provide a description of the organization's collections and explain how they further the organization's exempt purpose in Part XIII.

5 During the year, did the organization solicit or receive donations of art, historical treasures, or other similar assets to be sold to raise funds rather than to be maintained as part of the organization's collection? ☐ Yes ☐ No

Part IV Escrow and Custodial Arrangements. Complete if the organization answered "Yes" on Form 990, Part IV, line 9, or reported an amount on Form 990, Part X, line 21.

1a Is the organization an agent, trustee, custodian or other intermediary for contributions or other assets not included on Form 990, Part X? ☐ Yes ☐ No

b If "Yes," explain the arrangement in Part XIII and complete the following table:

		Amount
c Beginning balance	1c	
d Additions during the year	1d	
e Distributions during the year	1e	
f Ending balance	1f	

2a Did the organization include an amount on Form 990, Part X, line 21, for escrow or custodial account liability? ☐ Yes ☐ No

b If "Yes," explain the arrangement in Part XIII. Check here if the explanation has been provided on Part XIII ☐

Part V Endowment Funds. Complete if the organization answered "Yes" on Form 990, Part IV, line 10.

	(a) Current year	(b) Prior year	(c) Two years back	(d) Three years back	(e) Four years back
1a Beginning of year balance					
b Contributions					
c Net investment earnings, gains, and losses					
d Grants or scholarships					
e Other expenditures for facilities and programs					
f Administrative expenses					
g End of year balance					

2 Provide the estimated percentage of the current year end balance (line 1g, column (a)) held as:

a Board designated or quasi-endowment ▶ _____ %
b Permanent endowment ▶ _____ %
c Term endowment ▶ _____ %

The percentages on lines 2a, 2b, and 2c should equal 100%.

3a Are there endowment funds not in the possession of the organization that are held and administered for the organization by:

		Yes	No
(i) Unrelated organizations	3a(i)		
(ii) Related organizations	3a(ii)		
b If "Yes" on line 3a(ii), are the related organizations listed as required on Schedule R?	3b		

4 Describe in Part XIII the intended uses of the organization's endowment funds.

Part VI Land, Buildings, and Equipment.

Complete if the organization answered "Yes" on Form 990, Part IV, line 11a. See Form 990, Part X, line 10.

Description of property	(a) Cost or other basis (investment)	(b) Cost or other basis (other)	(c) Accumulated depreciation	(d) Book value
1a Land				
b Buildings				
c Leasehold improvements				
d Equipment		46,335.	43,489.	2,846.
e Other				
Total. Add lines 1a through 1e. *(Column (d) must equal Form 990, Part X, column (B), line 10c.)* ▶				2,846.

Part VII Investments - Other Securities.

Complete if the organization answered "Yes" on Form 990, Part IV, line 11b. See Form 990, Part X, line 12.

(a) Description of security or category (including name of security)	(b) Book value	(c) Method of valuation: Cost or end-of-year market value
(1) Financial derivatives		
(2) Closely held equity interests		
(3) Other		
(A) CHARLES SCHWAB	8,590,450.	END-OF-YEAR MARKET VALUE
(B)		
(C)		
(D)		
(E)		
(F)		
(G)		
(H)		
Total. (Col. (b) must equal Form 990, Part X, col. (B) line 12.) ▶	8,590,450.	

Part VIII Investments - Program Related.

Complete if the organization answered "Yes" on Form 990, Part IV, line 11c. See Form 990, Part X, line 13.

(a) Description of investment	(b) Book value	(c) Method of valuation: Cost or end-of-year market value
(1)		
(2)		
(3)		
(4)		
(5)		
(6)		
(7)		
(8)		
(9)		
Total. (Col. (b) must equal Form 990, Part X, col. (B) line 13.) ▶		

Part IX Other Assets.

Complete if the organization answered "Yes" on Form 990, Part IV, line 11d. See Form 990, Part X, line 15.

(a) Description	(b) Book value
(1)	
(2)	
(3)	
(4)	
(5)	
(6)	
(7)	
(8)	
(9)	
Total. *(Column (b) must equal Form 990, Part X, col. (B) line 15.)* ▶	

Part X Other Liabilities.

Complete if the organization answered "Yes" on Form 990, Part IV, line 11e or 11f. See Form 990, Part X, line 25.

1. (a) Description of liability	(b) Book value
(1) Federal income taxes	
(2) FUNDS HELD FOR OTHERS	16,231.
(3)	
(4)	
(5)	
(6)	
(7)	
(8)	
(9)	
Total. *(Column (b) must equal Form 990, Part X, col. (B) line 25.)* ▶	16,231.

2. Liability for uncertain tax positions. In Part XIII, provide the text of the footnote to the organization's financial statements that reports the organization's liability for uncertain tax positions under FASB ASC 740. Check here if the text of the footnote has been provided in Part XIII ☐

Part XI Reconciliation of Revenue per Audited Financial Statements With Revenue per Return.

Complete if the organization answered "Yes" on Form 990, Part IV, line 12a.

1	Total revenue, gains, and other support per audited financial statements			1	13,663,185.
2	Amounts included on line 1 but not on Form 990, Part VIII, line 12:				
a	Net unrealized gains (losses) on investments	2a			
b	Donated services and use of facilities	2b			
c	Recoveries of prior year grants	2c			
d	Other (Describe in Part XIII.)	2d			
e	Add lines 2a through 2d			2e	0.
3	Subtract line 2e from line 1			3	13,663,185.
4	Amounts included on Form 990, Part VIII, line 12, but not on line 1:				
a	Investment expenses not included on Form 990, Part VIII, line 7b	4a			
b	Other (Describe in Part XIII.)	4b	213,720.		
c	Add lines 4a and 4b			4c	213,720.
5	Total revenue. Add lines 3 and 4c. *(This must equal Form 990, Part I, line 12.)*			5	13,876,905.

Part XII Reconciliation of Expenses per Audited Financial Statements With Expenses per Return.

Complete if the organization answered "Yes" on Form 990, Part IV, line 12a.

1	Total expenses and losses per audited financial statements			1	7,413,976.
2	Amounts included on line 1 but not on Form 990, Part IX, line 25:				
a	Donated services and use of facilities	2a			
b	Prior year adjustments	2b			
c	Other losses	2c			
d	Other (Describe in Part XIII.)	2d			
e	Add lines 2a through 2d			2e	0.
3	Subtract line 2e from line 1			3	7,413,976.
4	Amounts included on Form 990, Part IX, line 25, but not on line 1:				
a	Investment expenses not included on Form 990, Part VIII, line 7b	4a	28,291.		
b	Other (Describe in Part XIII.)	4b			
c	Add lines 4a and 4b			4c	28,291.
5	Total expenses. Add lines 3 and 4c. *(This must equal Form 990, Part I, line 18.)*			5	7,442,267.

Part XIII Supplemental Information.

Provide the descriptions required for Part II, lines 3, 5, and 9; Part III, lines 1a and 4; Part IV, lines 1b and 2b; Part V, line 4; Part X, line 2; Part XI, lines 2d and 4b; and Part XII, lines 2d and 4b. Also complete this part to provide any additional information.

PART XI, LINE 4B - OTHER ADJUSTMENTS:

INVESTMENT INCOME, NET OF EXPENSES 213,720.

DocuSign Envelope ID: 6CC5359C-FFD7-44A8-94D2-157F14C3A951

SCHEDULE I (Form 990)

Department of the Treasury
Internal Revenue Service

Grants and Other Assistance to Organizations, Governments, and Individuals in the United States

Complete if the organization answered "Yes" on Form 990, Part IV, line 21 or 22.

▶ Attach to Form 990.

▶ Go to www.irs.gov/Form990 for the latest information.

OMB No. 1545-0047

2021

Open to Public Inspection

Name of the organization
OPPORTUNITY 180

Employer identification number
61-1753910

Part I General Information on Grants and Assistance

1 Does the organization maintain records to substantiate the amount of the grants or assistance, the grantees' eligibility for the grants or assistance, and the selection criteria used to award the grants or assistance? ☐ Yes ☒ No

2 Describe in Part IV the organization's procedures for monitoring the use of grant funds in the United States.

Part II Grants and Other Assistance to Domestic Organizations and Domestic Governments. Complete if the organization answered "Yes" on Form 990, Part IV, line 21, for any recipient that received more than $5,000. Part II can be duplicated if additional space is needed.

1 (a) Name and address of organization or government	(b) EIN	(c) IRC section (if applicable)	(d) Amount of cash grant	(e) Amount of noncash assistance	(f) Method of valuation (book, FMV, appraisal, other)	(g) Description of noncash assistance	(h) Purpose of grant or assistance
BATTLE BORN ACADEMY 4201 E BONANZA RD LAS VEGAS, NV 89110	86-2779420	501(C)(3)	441,189.	0.			CSP GRANT
BEACON ACADEMY OF NEVADA 7360 W FLAMINGO RD LAS VEGAS, NV 89147	26-2874282	501(C)(3)	672,508.	0.			CSP GRANT
CITIZENS OF THE WORLD CHARTER SCHOOLS - 5371 WILSHIRE BLVD, SUITE 210 - LOS ANGELES , CA 90036	45-2823612	501(C)(3)	194,374.	0.			PROPEL FELLOWSHIP
CIVICA NEVADA CAREER & COLLEGIATE ACADEMY - 1501 E CAREY AVE - N LAS VEGAS, NV 89030	84-4233467	501(C)(3)	667,386.	0.			CSP GRANT
DEMOCRACY PREP AT THE AGASSI CAMPUS - 1201 W LAKE MEAD BLVD - LAS VEGAS, NV 89106	82-1301171	501(C)(3)	57,500.	0.			HIGH QUALITY TEACHER RECRUITMENT AND RETNETION
FUTURO ACADEMY 920 N LAMB BLVD LAS VEGAS, NV 89110	81-0731066	501(C)(3)	35,000.	0.			PLANNING GRANT

2 Enter total number of section 501(c)(3) and government organizations listed in the line 1 table ▶ 16.

3 Enter total number of other organizations listed in the line 1 table ▶ 1.

LHA **For Paperwork Reduction Act Notice, see the Instructions for Form 990.**

Schedule I (Form 990) 2021

132101 10-26-21

DocuSign Envelope ID: 6CC5359C-FFD7-44A8-94D2-157F14C3A951

Part III **Grants and Other Assistance to Domestic Individuals.** Complete if the organization answered "Yes" on Form 990, Part IV, line 22. Part III can be duplicated if additional space is needed.

(a) Type of grant or assistance	(b) Number of recipients	(c) Amount of cash grant	(d) Amount of non-cash assistance	(e) Method of valuation (book, FMV, appraisal, other)	(f) Description of noncash assistance

Part IV **Supplemental Information.** Provide the information required in Part I, line 2; Part III, column (b); and any other additional information.

PART I, LINE 2

ALL GRANTED FUNDS REQUIRE ONGOING REPORTING TO ENSURE ACCOUNTABILITY.

REPORTING FREQUENCY VARIES DEPENDENT ON THE NATURE OF THE GRANT AND

FUNDING. OPPORTUNITY 180 WILL FOLLOW-UP WITH GRANT RECIPIENTS WHEN

DEADLINES ARE APPROACHING. OPPORTUNITY 180 REVIEWS GRANT REPORTS TO

MONITOR PROGRESS.

Schedule I (Form 990) OPPORTUNITY 180 61-1753910 Page 1

Part II Continuation of Grants and Other Assistance to Domestic Organizations and Domestic Governments (Schedule I (Form 990), Part II.)

(a) Name and address of organization or government	(b) EIN	(c) IRC section if applicable	(d) Amount of cash grant	(e) Amount of noncash assistance	(f) Method of valuation (book, FMV, appraisal, other)	(g) Description of non-cash assistance	(h) Purpose of grant or assistance
NEVADA PREP CHARTER SCHOOL 1780 BETTY LN LAS VEGAS, NV 89156	32-0511761	501(C)(3)	50,000.	0.			FELLOWSHIP GRANT
NEVADA RISE ACADEMY CHARTER SCHOOL 2525 EMERSON AVE LAS VEGAS, NV 89121	81-4539783	501(C)(3)	40,000.	0.			HIGH QUALITY TEACHER RECRUITMENT AND RETNETION
PILOTED SCHOOLS FOR NEVADA 3115 LAS VEGAS BLVD N LAS VEGAS, NV 89115	86-1761385	501(C)(3)	95,661.	0.			CSP GRANT
PINECREST ACADEMY OF NORTHERN NEVADA - 1150 SILENT SPARROW DR - SPARKS , NV 89441	84-1776306	501(C)(3)	298,636.	0.			CSP GRANT
RED HOOK MANAGEMENT 5871 S MOUNTAIN VISTA ST LAS VEGAS, NV 89120	88-0514317	501(C)(3)	75,000.	0.			EXPLORE ACADEMY
SAGE COLLEGIATE PUBLIC CHARTER SCHOOL - 10303 SONGSPARROW COURT - LAS VEGAS, NV 89135	85-1448793	501(C)(3)	354,134.	0.			CSP GRANT
SQUARE PANDA, INC. 935 BENECIA AVE SUNNYVALE , CA 94085	47-1761864		1,650,000.	0.			REAL PROGRAM
TEACH LAS VEGAS 4660 N RANCHO DR LAS VEGAS, NV 89130	85-2358292	501(C)(3)	476,313.	0.			CSP GRANT
TEACH PLUS PO BOX 845737 BOSTON, MA 02284	26-3849472	501(C)(3)	30,000.	0.			FELLOWSHIP GRANT

Schedule I (Form 990)

132241
11-18-21

DocuSign Envelope ID: 6CC5359C-FFD7-44A8-94D2-157F14C3A951

Part II Continuation of Grants and Other Assistance to Domestic Organizations and Domestic Governments (Schedule I (Form 990), Part II.)

(a) Name and address of organization or government	(b) EIN	(c) IRC section if applicable	(d) Amount of cash grant	(e) Amount of noncash assistance	(f) Method of valuation (book, FMV, appraisal, other)	(g) Description of non-cash assistance	(h) Purpose of grant or assistance
THE GOODEN FOUNDATION, INC. 3081 S VALLEY VIEW BLVD LAS VEGAS, NV 89102	38-3971938	501(C)(3)	99,978.	0.			FAMILY POWER IMPACT GRANT
THE NEW TEACHER PROJECT, INC. 500 7TH AVE, 8TH FLOOR NEW YORK , NY 10018	13-3850158	501(C)(3)	166,886.	0.			COHORT

SCHEDULE J (Form 990)

Department of the Treasury
Internal Revenue Service

Compensation Information

For certain Officers, Directors, Trustees, Key Employees, and Highest Compensated Employees

▶ **Complete if the organization answered "Yes" on Form 990, Part IV, line 23.**
▶ **Attach to Form 990.**
▶ **Go to www.irs.gov/Form990 for instructions and the latest information.**

OMB No. 1545-0047

2021

Open to Public Inspection

Name of the organization

OPPORTUNITY 180

Employer identification number

61-1753910

Part I Questions Regarding Compensation

			Yes	No
1a	Check the appropriate box(es) if the organization provided any of the following to or for a person listed on Form 990, Part VII, Section A, line 1a. Complete Part III to provide any relevant information regarding these items.			
	☐ First-class or charter travel	☐ Housing allowance or residence for personal use		
	☐ Travel for companions	☐ Payments for business use of personal residence		
	☐ Tax indemnification and gross-up payments	☐ Health or social club dues or initiation fees		
	☐ Discretionary spending account	☐ Personal services (such as maid, chauffeur, chef)		
b	If any of the boxes on line 1a are checked, did the organization follow a written policy regarding payment or reimbursement or provision of all of the expenses described above? If "No," complete Part III to explain	1b		
2	Did the organization require substantiation prior to reimbursing or allowing expenses incurred by all directors, trustees, and officers, including the CEO/Executive Director, regarding the items checked on line 1a?	2		
3	Indicate which, if any, of the following the organization used to establish the compensation of the organization's CEO/Executive Director. Check all that apply. Do not check any boxes for methods used by a related organization to establish compensation of the CEO/Executive Director, but explain in Part III.			
	☐ Compensation committee	☒ Written employment contract		
	☐ Independent compensation consultant	☒ Compensation survey or study		
	☐ Form 990 of other organizations	☒ Approval by the board or compensation committee		
4	During the year, did any person listed on Form 990, Part VII, Section A, line 1a, with respect to the filing organization or a related organization:			
a	Receive a severance payment or change-of-control payment?	4a		X
b	Participate in or receive payment from a supplemental nonqualified retirement plan?	4b		X
c	Participate in or receive payment from an equity-based compensation arrangement?	4c		X
	If "Yes" to any of lines 4a-c, list the persons and provide the applicable amounts for each item in Part III.			
	Only section 501(c)(3), 501(c)(4), and 501(c)(29) organizations must complete lines 5-9.			
5	For persons listed on Form 990, Part VII, Section A, line 1a, did the organization pay or accrue any compensation contingent on the revenues of:			
a	The organization?	5a		X
b	Any related organization?	5b		X
	If "Yes" on line 5a or 5b, describe in Part III.			
6	For persons listed on Form 990, Part VII, Section A, line 1a, did the organization pay or accrue any compensation contingent on the net earnings of:			
a	The organization?	6a		X
b	Any related organization?	6b		X
	If "Yes" on line 6a or 6b, describe in Part III.			
7	For persons listed on Form 990, Part VII, Section A, line 1a, did the organization provide any nonfixed payments not described on lines 5 and 6? If "Yes," describe in Part III	7		X
8	Were any amounts reported on Form 990, Part VII, paid or accrued pursuant to a contract that was subject to the initial contract exception described in Regulations section 53.4958-4(a)(3)? If "Yes," describe in Part III	8		X
9	If "Yes" on line 8, did the organization also follow the rebuttable presumption procedure described in Regulations section 53.4958-6(c)?	9		

DocuSign Envelope ID: 6CC5359C-FFD7-44A8-94D2-157F14C3A951

Part II **Officers, Directors, Trustees, Key Employees, and Highest Compensated Employees.** Use duplicate copies if additional space is needed.

For each individual whose compensation must be reported on Schedule J, report compensation from the organization on row (i) and from related organizations, described in the instructions, on row (ii). Do not list any individuals that aren't listed on Form 990, Part VII.

Note: The sum of columns (B)(i)-(iii) for each listed individual must equal the total amount of Form 990, Part VII, Section A, line 1a, applicable column (D) and (E) amounts for that individual.

(A) Name and Title		(B) Breakdown of W-2 and/or 1099-MISC and/or 1099-NEC compensation			(C) Retirement and other deferred compensation	(D) Nontaxable benefits	(E) Total of columns (B)(i)-(D)	(F) Compensation in column (B) reported as deferred on prior Form 990
		(i) Base compensation	(ii) Bonus & incentive compensation	(iii) Other reportable compensation				
(1) JANA WILCOX LAVIN	(i)	197,625.	0.	0.	5,929.	0.	203,554.	0.
CHIEF EXECUTIVE OFFICER	(ii)	0.	0.	0.	0.	0.	0.	0.
	(i)							
	(ii)							
	(i)							
	(ii)							
	(i)							
	(ii)							
	(i)							
	(ii)							
	(i)							
	(ii)							
	(i)							
	(ii)							
	(i)							
	(ii)							
	(i)							
	(ii)							
	(i)							
	(ii)							
	(i)							
	(ii)							
	(i)							
	(ii)							
	(i)							
	(ii)							
	(i)							
	(ii)							
	(i)							
	(ii)							

DocuSign Envelope ID: 6CC5359C-FFD7-44A8-94D2-157F14C3A951

Part III Supplemental Information

Provide the information, explanation, or descriptions required for Part I, lines 1a, 1b, 3, 4a, 4b, 4c, 5a, 5b, 6a, 6b, 7, and 8, and for Part II. Also complete this part for any additional information.

SCHEDULE O (Form 990)

Department of the Treasury
Internal Revenue Service

Supplemental Information to Form 990 or 990-EZ

Complete to provide information for responses to specific questions on Form 990 or 990-EZ or to provide any additional information.
▶ Attach to Form 990 or Form 990-EZ.
▶ Go to www.irs.gov/Form990 for the latest information.

OMB No. 1545-0047

2021

Open to Public Inspection

Name of the organization: OPPORTUNITY 180

Employer identification number: 61-1753910

FORM 990, PART III, LINE 1, DESCRIPTION OF ORGANIZATION MISSION:

SUPPORT HIGH-PERFORMING SCHOOLS AND ORGANIZATIONS THAT WILL PROVIDE STUDENTS WITH OUTSTANDING EDUCATIONAL OPPORTUNITIES, AND HELP PROVE THAT EVERY CHILD CAN ACHIEVE, REGARDLESS OF ETHNICITY, ZIP CODE OR FAMILY INCOME.

FORM 990, PART VI, SECTION A, LINE 8B:

THE ORGANIZATION DOES NOT HAVE ANY COMMITTEE WITH BROAD AUTHORITY TO ACT ON BEHALF OF THE BOARD.

FORM 990, PART VI, SECTION B, LINE 11B:

OPPORTUNITY 180 BOARD OF DIRECTORS WILL REVIEW THE PREPARED IRS FORM 990.

FORM 990, PART VI, SECTION B, LINE 15A:

THE BOARD OF DIRECTORS RETAINED AN OUTSIDE ORGANIZATION TO ANALYZE NONPROFIT SALARIES AND USED THE COMPENSATION ANALYSIS TO DETERMINE THE SALARY FOR THE CEO.

FORM 990, PART VI, SECTION C, LINE 19:

NO OTHER DOCUMENTS AVAILABLE TO THE PUBLIC.

FORM 990, PART XII, LINE 2C:

THE PROCESS HAS NOT CHANGED FROM THE PRIOR YEAR.